OS-299 (10-22) pennsylvania DEPARTMENT OF TRANSPORTATION www.penndot.pa.gov	TRANSMITTAL LETTER	PUBLICATION: Publication 13M DATE: 9/25/2023

SUBJECT:

Revisions to
Design Manual, Part 2
Highway Design
March 2015 Edition, Change No. 10

INFORMATION AND SPECIAL INSTRUCTIONS:

Incorporate the attached revisions into the March 2015 Edition of Publication 13M.

These updates should be adopted on all new and existing designs as soon as practical without affecting letting schedules, but must be used on projects Let after April 12, 2024. Below are two exceptions:

1. The revisions to Chapter 12, Section 12.11 should be adopted on all new and existing designs as soon as practical without affecting letting schedules, but must be used on projects with T.S.& L. approval after April 12, 2024.

2. The revisions to Chapters 1, 2 and 4 should be adopted on all new and existing designs as soon as practical without affecting letting schedules, but must be used on projects with Line, Grade and Typical Section (LG&T) submission approval after April 12, 2024. If the LG&T is not performed for a project, the revisions must be used for projects with scoping field view approval after April 12, 2024.

TABLE OF CONTENTS

-Updated for consistency with the revisions made as described below.

CHAPTER 1 GENERAL DESIGN

-Refer to Publication 13, Design Manual Part 2, *Contextual Roadway Design*.

CHAPTER 1, APPENDIX A REDUCED LANE AND SHOULDER WIDTH ON BRIDGES DOCUMENTATION

-Deleted this Appendix from Publication 13M.

CHAPTER 2 DESIGN ELEMENTS AND DESIGN CONTROLS

-Refer to Publication 13, Design Manual Part 2, *Contextual Roadway Design*, for much of the content that was previously presented in this Chapter as part of Publication 13M, March 2015 Edition, Change #9.

-The content from Section 2.18.U (Median Crossovers) remains in this Chapter until it is able to be moved into Publication 13, Design Manual Part 2, *Contextual Roadway Design*.

CHAPTER 2, APPENDIX A VERTICAL CLEARANCE DESIGN EXCEPTION COORDINATION WITH SURFACE DEPLOYMENT AND DISTRIBUTION COMMAND TRANSPORTATION ENGINEERING AGENCY (SDDCTEA)

-Deleted this Appendix from Publication 13M.

CHAPTER 4 GRADE SEPARATIONS AND INTERCHANGES

*Section 4.4.C (Underpass Roadways)

-Deleted second paragraph regarding some reduction in the basic roadway cross section.

-Deleted third paragraph regarding lateral offsets for major roadway underpasses.

-Deleted fourth paragraph regarding minimum lateral clearance from the edge of the pavement to the face of the protective barrier in front of retaining wall and bridge substructures.

*Section 4.7.C (Ramp Traveled Way Widths)

-Refer to Publication 13, Design Manual Part 2, *Contextual Roadway Design*, Chapter 3, New Construction and Reconstruction – Change In Road Type.

CHAPTER 12 GUIDE RAIL, MEDIAN BARRIER AND ROADSIDE SAFETY DEVICES

*Section 12.3 (Traffic Barrier Updates As Part of New Construction, Reconstruction, 3R, Pavement Preservation and Bridge Projects)

-Revised title of section to include bridge projects.

-Revised first paragraph, first sentence by changing "As part of New, Reconstruction, 3R, and Pavement Preservation projects" to "As part of New Construction, Reconstruction, 3R, Pavement Preservation and Bridge projects".

-Inserted new third paragraph to discuss the following requirements:

> -New and replacement installations of roadside safety devices not meeting the design and/or installation requirements in this Chapter or Publication 72M (first sentence).
>
> -Non-standard bridge barrier installations (second and third sentences).

*Section 12.3.A (Guide Rail, Guide Rail End Treatments, and Terminals (excluding crash cushions on rigid barriers)

-Revised Section 12.3.A.2.b (3R and Pavement Preservation Projects) by adding "with an overlay (or other pavement treatment) over 1 in, regardless of profile changes, i.e., it includes mill and fill projects with no profile change".

-Revised Section 12.3.A.3.b (3R and Pavement Preservation Projects) by inserting "(or other pavement treatment)" after "with an overlay".

-Revised Section 12.3.A.4.c(2) by changing "HDTS" to "HDTD".

*Section 12.3.B (Concrete Barriers (excluding bridge barriers) and Associated Crash Cushions)

-Inserted "(excluding bridge barriers)" in Section title after "Concrete Barriers".

*Section 12.3.D (Bridge Barriers (includes median and outside barriers adjacent to vehicular traffic)).

-Inserted "(includes median and outside barriers adjacent to vehicular traffic)" in Section title after "Bridge Barriers".

-Inserted first paragraph for new or replacement bridges and bridge superstructure replacements.

-Inserted second paragraph for bridge rehabilitation projects.

-Revised third paragraph, beginning of first sentence from "For all roadway classifications where the barrier is rehabilitated and/or an overlay is placed on a bridge…" to "For all project types and roadway classifications where an overlay is placed on a bridge…".

-Added third paragraph, third sentence, "This requirement may be waived by the District ADE for Design in the case of bridges classified as historic (i.e., listed in, or eligible for listing in, the National Register of Historic Places) or contributing to a historic district)."

*Section 12.3.E (Guide Rail to Bridge Barrier Transitions)

-Revised Section 12.3.E.1 as follows:

> -Added Subsection title, "For All Project Types with New or Replaced Bridge Barriers."
>
> -Changed beginning of first sentence from "When a bridge barrier is <u>replaced</u>…" to "When a bridge barrier is <u>added or replaced</u>…".

-Revised Section 12.3.E.2 as follows:

> -Added Subsection title, "For New Construction, Reconstruction, 3R and Pavement Preservation Projects with Existing Bridge Barriers to Remain."
>
> -Changed first paragraph, beginning of first sentence from "When a bridge barrier is to <u>remain, and the approach guide rail is being updated</u>…" to "When <u>the approach guide rail is being updated (refer to Section 12.3.A)</u>…".
>
> -Changed second paragraph, second sentence from "Consult with the Highway Design and Technology Section or the Bridge Office as needed" to "Consult with the Highway Design and Technology Division or the Bureau of Bridge (BOB) as needed."
>
> -Changed third paragraph, first sentence by adding "and refer to Section 12.3.E.4 below for retrofit transitions" at the end of the sentence.

-Deleted third paragraph, second sentence, "Regardless, the new transition must:" along with three bulleted items.

-Deleted fourth paragraph indicating that Chapter 12, Appendix A, could be used as a reference for retro-fits for some, but not all, existing bridge barriers.

-Added Section 12.3.E.3, "Bridge Projects (with minimal approach work) with Existing Bridge Barriers to Remain".

-Added Section 12.3.E.4, "Retrofit Transitions to Existing Bridge Barriers".

*Table 12.12 (Concrete Median Barriers for Permanent Roadway Installations)

-Reorganized table by inserting columns for minimum segment length, maximum segment length, and minimum installation lengths.

-Added single asterisk note, "*Length between segments or expansion joints."

-Added double asterisk note, "**Minimum barrier installation length for freestanding barrier. A freestanding barrier is defined here as a barrier which the ends are not anchored or attached to another barrier or fixed object."

*Section 12.8 (Single Face Concrete Barrier)

-Deleted previous content for this Section including the following:

-The need for single face concrete barrier (was previously first paragraph, second sentence).

-Stability for single face barrier without back support (was previously second paragraph, second and third sentences).

-Where single face barriers adjoin existing barrier systems (was previously fifth paragraph).

-Revised remaining content for this Section and placed it in:

-Section 12.8.A (General Considerations)
-Section 12.8.C (End Treatments for Single Face Concrete Barrier)

-Added the following Sections:

-Section 12.8.B (Typical Treatments Behind Barrier)

-Section 12.8.C (End Treatments for Single Face Concrete Barrier)

-Section 12.8.D (Moment Slab with Barrier and Transition)

-Section 12.8.E (Trailing End Guide Rail Connection for Divided Highways or One-Way Roadways)

-Section 12.8.F (Typical Placement at Piers Adjacent to Shoulders)

-Section 12.8.G (Typical Placement at Piers in Medians)

-Section 12.8.H (Single Face Concrete Barrier Transitions)

*Section 12.8.A (General Considerations)

-Expanded second paragraph to list four bulleted items where single face concrete barrier may be considered as a roadside (shoulder) barrier on projects.

-Added third paragraph to state the designs of single face concrete barrier aim to satisfy the performance requirements for longitudinal barriers as discussed in Section 12.4.A.

-Added fourth paragraph to discuss PennDOT's two permanent single face concrete barriers (F-shape) with heights of 32 in and 42 in above the pavement surface.

-Added fifth paragraph to say the following:

-Single face concrete barriers for permanent roadway installations, both with fill and without fill, are shown in Publication 72M and in Table 12.13.

-Precast single face concrete barriers may only be used with fill.

-Added sixth paragraph to discuss minimum and maximum segment lengths of single face concrete barriers.

-Revised and expanded last paragraph to list four bullets when permanent single face concrete barriers are used.

-Added Table 12.13 (Single Face Concrete Barriers (F-Shape) for Permanent Roadway Installations) into Section 12.8.A.

*Section 12.11 (Bridge Railing Test Level Selection Guidelines)

-Represents a complete revision of the previous Section 12.11 (Railing System Test Level Selection for Bridges).

-Deleted these previous items:

-Table 12.13 (Railing System Test Level Selection Criteria)

-Figure 12.24 (Grade Traffic Adjustment Factor (K_g) and Curvature Traffic Adjustment Factor (K_c))

-Figure 12.25 (Drop-off Traffic Adjustment Factor (K_s))

-Figure 12.26 (Sample Authorization)

-Added the following Sections:

-Section 12.11.A (Introduction)
-Section 12.11.B (Standard Bridge Railing Test Levels)
-Section 12.11.C (Alternate Bridge Railing Test Levels)

-Section 12.11.D (Risk-Based Test Level Selection)

-Added the following Examples:

-Example 1 (Justification for Alternate TL-4 (from Standard TL-5))
-Example 2 (Justification for Alternate TL-3 (from Standard TL-5))
-Example 3 (Justification for Alternate TL-4 (from Standard TL-5))
-Example 4 (Confirmation of Standard TL-5)
-Example 5 (Confirmation of Standard TL-5)
-Example 6 (Increase of Standard Test Level from TL-3 to TL-4)

-Added the following Tables (and renumbered all subsequent tables):

-Table 12.14 (Lifetime Encroachments Per 1,000 ft of Bridge Railing)
-Table 12.15 (Site-Specific Encroachment Adjustment Factors)

-Added the following Figures (and renumbered all subsequent figures):

-Figure 12.24 (Lifetime Encroachments / 1,000 ft of Bridge Railing Nomograph)

-Figure 12.25 (Test Level Selection Nomograph (Risk < 0.01 in 30 Years for 1000 ft of Bridge Railing))

-Figure 12.26 (Alternate Bridge Railing Test Level Authorization)

-Figure 12.27 (Standard Bridge Railing Test Levels)
(Flowchart supplements Section 12.11.B)

-Figure 12.28 (Alternate Bridge Railing Test Level Selection)
(Flowchart supplements Section 12.11.C)

-Figure 12.29 (Risk-Based Test Level Selection)
(Flowchart supplements Section 12.11.D)

CHAPTER 12, APPENDIX A RESERVED FOR FUTURE USE

Deleted previous content from this Appendix (Bridge Barrier End Transitions).

Gender neutral language has been updated in all new and revised pages, i.e., Table of Contents; Chapter 1; Chapter 2; Chapter 4; Chapter 12; and Chapter 12, Appendix A.

Any comments or questions regarding the above revisions should be directed to the Highway Design and Technology Division, Bureau of Design and Delivery.

CANCEL AND DESTROY THE FOLLOWING: Table of Contents - all pages Chapter 1 - all pages Chapter 1, Appendix A - all pages Chapter 2 - all pages Chapter 2, Appendix A - all pages Chapter 4 - all pages Chapter 12 - all pages Chapter 12, Appendix A - all pages	ADDITIONAL COPIES ARE AVAILABLE FROM: ☒ PennDOT website - www.penndot.pa.gov *Click on Forms, Publications & Maps* APPROVED FOR ISSUANCE BY: MICHAEL B. CARROLL Secretary of Transportation BY: Jonathan Fleming Chief Executive, Highway Administration

BLANK PAGE

pennsylvania

DEPARTMENT OF TRANSPORTATION
BUREAU OF DESIGN AND DELIVERY
www.penndot.pa.gov

Design Manual Part 2 Highway Design

Publication 13M - March 2015 Edition

September 2023 Change No. 10

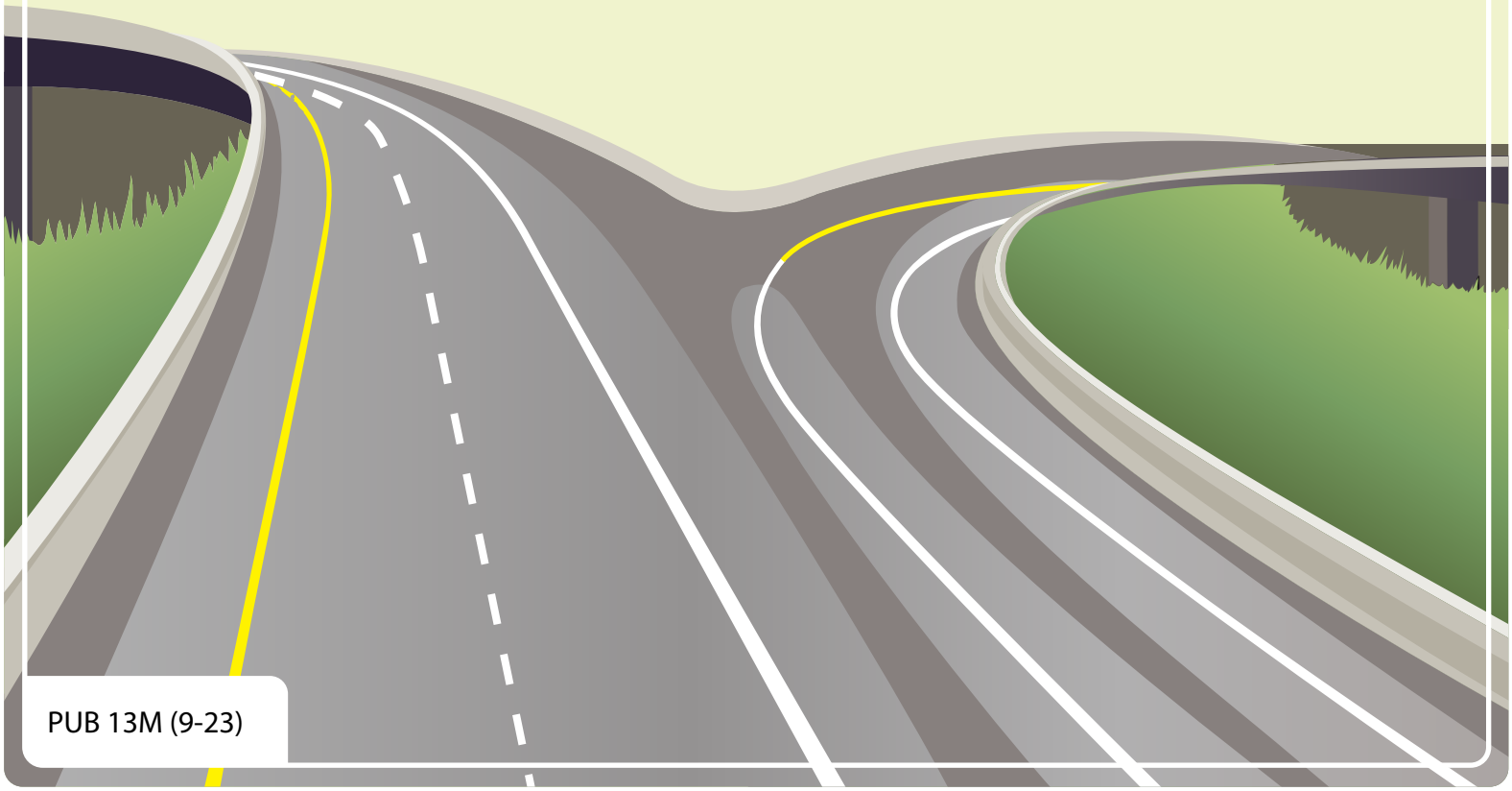

PUB 13M (9-23)

BLANK PAGE

DESIGN MANUAL, PART 2
HIGHWAY DESIGN

TABLE OF CONTENTS

CHAPTER **SUBJECT** **PAGE**

CHAPTER 1 GENERAL DESIGN

CHAPTER 2 DESIGN ELEMENTS AND DESIGN CONTROLS

2.18 OTHER ELEMENTS AFFECTING GEOMETRIC DESIGN ..... 2 - 1
U. Median Crossovers ..... 2 - 1

CHAPTER 3 INTERSECTIONS

3.0 INTRODUCTION ..... 3 - 1
3.1 OBJECTIVES AND FACTORS FOR DESIGN CONSIDERATIONS ..... 3 - 1
3.2 TYPES OF INTERSECTIONS ..... 3 - 1
3.3 GEOMETRIC DESIGN ELEMENTS ..... 3 - 2
A. Alignment and Profile ..... 3 - 2
B. Types of Turning Roadways ..... 3 - 3
C. Sight Distance ..... 3 - 3
D. Superelevation ..... 3 - 4
E. Islands ..... 3 - 4
F. Median Openings ..... 3 - 4
G. Auxiliary Lanes ..... 3 - 5
H. Direct and Indirect Left Turns and U-Turns ..... 3 - 5
I. Curb Radii for Turning Movements in Urban Areas ..... 3 - 5
J. Free-Flow Turning Roadways at Intersections ..... 3 - 5
K. Channelization ..... 3 - 6
L. Additional Design Considerations ..... 3 - 6
3.4 HIGHWAY CAPACITY ANALYSIS AND TRAFFIC CONTROL ..... 3 - 6
3.5 ROUNDABOUTS ..... 3 - 7
A. Introduction ..... 3 - 7
B. Planning ..... 3 - 7
C. Operations ..... 3 - 11
D. Safety ..... 3 - 12
E. Design ..... 3 - 12
F. Other Considerations ..... 3 - 15

APPENDIX A Roundabout Key Considerations Checklist ..... 3A - 1

CHAPTER 4 GRADE SEPARATIONS AND INTERCHANGES

4.0 INTRODUCTION ..... 4 - 1
4.1 TYPES OF INTERCHANGES ..... 4 - 1
4.2 WARRANTS FOR GRADE SEPARATIONS AND INTERCHANGES ..... 4 - 1
4.3 ADAPTABILITY OF HIGHWAY GRADE SEPARATIONS AND INTERCHANGES ..... 4 - 2
4.4 GRADE SEPARATION STRUCTURES ..... 4 - 2
A. Types of Separation Structures ..... 4 - 2
B. Overpass Versus Underpass Roadways ..... 4 - 2
C. Underpass Roadways ..... 4 - 2
D. Overpass Roadways ..... 4 - 3

E. Longitudinal Distance to Attain Grade Separation ..... 4 - 3
F. Grade Separations Without Ramps ..... 4 - 3
4.5 INTERCHANGES ..... 4 - 3
A. Determination of Interchange Configuration ..... 4 - 4
B. Approaches to the Structure ..... 4 - 4
C. Interchange Spacing ..... 4 - 4
D. Uniformity of Interchange Patterns ..... 4 - 4
E. Route Continuity ..... 4 - 4
F. Overlapping Routes ..... 4 - 4
G. Signing and Marking ..... 4 - 4
H. Basic Number of Lanes ..... 4 - 4
I. Coordination of Lane Balance and Basic Number of Lanes ..... 4 - 4
J. Auxiliary Lanes ..... 4 - 4
K. Lane Reductions ..... 4 - 4
L. Collector-Distributor Roads ..... 4 - 5
M. Two-Exit Versus Single-Exit Interchange Design ..... 4 - 5
N. Wrong-Way Entry ..... 4 - 5
O. Other Interchange Design Features ..... 4 - 5
4.6 WEAVING SECTIONS ..... 4 - 5
4.7 RAMPS ..... 4 - 5
A. Types and Examples ..... 4 - 5
B. General Ramp Design Considerations ..... 4 - 5
C. Ramp Traveled-Way Widths ..... 4 - 6
D. Ramp Terminal Design ..... 4 - 6
E. Ramp Capacity Analysis and Traffic Control ..... 4 - 8
F. Ramp Design Sheet ..... 4 - 8

CHAPTER 5 LIGHTING

5.0 INTRODUCTION ..... 5 - 1
5.1 SITE INSPECTION ..... 5 - 2
5.2 PRE-DESIGN MEETING ..... 5 - 2
5.3 PRELIMINARY DESIGN ..... 5 - 3
A. Overview ..... 5 - 3
B. Definitions ..... 5 - 3
C. General Requirements ..... 5 - 3
D. Preliminary Design Report and Plans ..... 5 - 5
5.4 FINAL DESIGN REQUIREMENTS ..... 5 - 7
A. Breakaway or Yielding Feature ..... 5 - 7
B. Pole Placement & Setback (in Relation to Guide Rail & Barrier) ..... 5 - 7
C. Pole Foundations ..... 5 - 7
D. Minimum Arm Lengths (for Poles) ..... 5 - 7
E. Pole Types ..... 5 - 7
F. Conduit and Cable ..... 5 - 8
G. Power Supply ..... 5 - 8
H. Multiple Distribution System ..... 5 - 8
5.5 HIGH MAST LIGHTING ..... 5 - 8
A. Candela (Candlepower) and Illuminance Data ..... 5 - 8
B. Luminaire Type ..... 5 - 8
C. "Run-out" Lighting ..... 5 - 8
D. Design Procedures ..... 5 - 8
5.6 UNDERPASS LIGHTING ..... 5 - 9
5.7 TUNNEL LIGHTING ..... 5 - 9
5.8 SAFETY REST AREAS, WELCOME CENTERS AND PERMANENT TRUCK WEIGH STATIONS ..... 5 - 9
5.9 ROUNDABOUTS ..... 5 - 10
A. Provision of Lighting ..... 5 - 10
B. Roundabouts on Streets with Continuous Lighting ..... 5 - 11

C. Isolated Roundabouts (No Continuous Lighting on Any Approach) ....5 - 12
D. Transition Lighting ....5 - 12
E. Lighting Pole Location ....5 - 14
F. Other Lighting Aspects ....5 - 14
5.10 FINAL LIGHTING SUBMISSION ....5 - 14
5.11 SAMPLE DESIGN REPORTS ....5 - 16

CHAPTER 6 PEDESTRIAN FACILITIES AND THE AMERICANS WITH DISABILITIES ACT

6.0 INTRODUCTION ....6 - 1
6.1 DEFINITIONS ....6 - 2
6.2 ADA REQUIREMENTS, STANDARDS AND GUIDELINES ....6 - 4
A. New Construction Projects ....6 - 5
B. Alteration Projects and Removing Existing Pedestrian Access Barriers ....6 - 5
C. Unaltered Existing Facilities ....6 - 9
6.3 PROJECT TYPE EXAMPLES ....6 - 10
A. Maintenance Type Projects ....6 - 10
B. Alteration Type Projects ....6 - 10
C. Reconstruction and New Construction Type Projects ....6 - 12
D. Connections to Existing Facilities ....6 - 13
6.4 LIAISON WITH LOCAL GOVERNMENT AND PRIVATE PROPERTY OWNERS ....6 - 13
A. Americans with Disabilities Act: Reimbursement and Maintenance for Curb Ramps with Local Municipalities ....6 - 13
B. Installing Curb Ramps Located Outside of the Public Right-of-Way ....6 - 15
6.5 PEDESTRIAN ACCESS ROUTE ....6 - 15
A. PAR General Requirements ....6 - 15
B. PAR Miscellaneous Requirements ....6 - 17
6.6 SIDEWALKS ....6 - 23
A. Agreements ....6 - 24
B. Funding ....6 - 24
C. Sidewalk Maintenance ....6 - 25
D. Additional Support Information ....6 - 25
E. Highway Occupancy Permit ....6 - 25
F. General Information ....6 - 25
6.7 SIDEWALK DESIGN CRITERIA ....6 - 26
6.8 PEDESTRIAN GRADE SEPARATION FACILITIES ....6 - 26
A. Physical Separation ....6 - 26
B. Access ....6 - 27
6.9 CURB RAMP DESIGN CONSIDERATIONS ....6 - 34
A. Existing Conditions ....6 - 34
B. General Considerations ....6 - 34
C. New Construction ....6 - 36
D. Alterations ....6 - 36
E. Ramp Types ....6 - 37
F. Non-standard Curb Ramps ....6 - 38
6.10 CURB RAMP DESIGN REQUIREMENTS FOR ROADWAY INTERSECTIONS ....6 - 57
A. Separate Curb Ramps or Single "Diagonal" Curb Ramp ....6 - 57
B. Pedestrian Crosswalk Location ....6 - 57
C. Flares and Crosswalks ....6 - 57
D. Drainage ....6 - 57
6.11 CURB RAMP DESIGN CRITERIA ....6 - 58
A. See PAR Requirements ....6 - 58
B. Depressed Curb for Curb Ramps ....6 - 58
C. Curb Ramp Slopes ....6 - 58
D. Curb Ramp Widths ....6 - 58
E. Flares Located Within Pedestrian Access Route ....6 - 58
F. Flares and Return Curbs Located Outside of Pedestrian Circulation Path ....6 - 58
G. Landing Requirements ....6 - 58

H. Miscellaneous Requirements ..... 6 - 58
6.12 TRAFFIC CONTROL REQUIREMENTS ..... 6 - 58
6.13 PEDESTRIAN CROSSING CONTROLS ..... 6 - 59
6.14 TEMPORARY ALTERNATE CIRCULATION PATHS AT CONSTRUCTION SITES ..... 6 - 59
6.15 TECHNICAL Q&A INFORMATION FOR ACCESSIBILITY ISSUES ..... 6 - 60
A. ADA Authority and Function ..... 6 - 60
B. General Design Criteria ..... 6 - 63
C. Elements of Accessible Design - Alterations ..... 6 - 65
D. Elements of Accessible Design - New Construction ..... 6 - 70
E. Temporary Routes for Alteration Project Accessibility ..... 6 - 70
F. Maintenance Issues ..... 6 - 70

APPENDIX A Technically Infeasible Form ..... 6A - 1

APPENDIX B Funding Scenarios ..... 6B - 1

APPENDIX C Reimbursement and Maintenance Agreement ..... 6C - 1

APPENDIX D Right-of-Way Letters ..... 6D - 1

APPENDIX E Pedestrian Study Determination ..... 6E - 1

APPENDIX F Parking Removal Letters ..... 6F - 1

CHAPTER 7 DRIVEWAYS

7.0 INTRODUCTION ..... 7 - 1
7.1 DEFINITIONS ..... 7 - 1
7.2 GENERAL DRIVEWAY REQUIREMENTS ..... 7 - 3
A. Design Features ..... 7 - 3
B. General Driveway Design Criteria ..... 7 - 3
7.3 ADA DRIVEWAY AND PEDESTRIAN GUIDELINES ..... 7 - 8

CHAPTER 8 LANDSCAPE PLANTING DESIGN (ROADSIDE DEVELOPMENT)

CHAPTER 9 SAFETY REST AREAS AND WELCOME CENTERS

9.0 INTRODUCTION ..... 9 - 1
9.1 DEFINITIONS ..... 9 - 1
9.2 DESIGN CRITERIA ..... 9 - 1
9.3 PARKING CAPACITY DETERMINATION ..... 9 - 2
A. Traffic Data - Peak Hour ..... 9 - 2
B. Parking Requirements ..... 9 - 2
9.4 PARKING CRITERIA ..... 9 - 3
A. General ..... 9 - 3
B. Parking Configurations ..... 9 - 3
9.5 WASTEWATER FLOW CALCULATION ..... 9 - 10
9.6 WATER SUPPLY DEMAND CALCULATION ..... 9 - 12
9.7 SAFETY REST AREA AND WELCOME CENTER BUILDINGS ..... 9 - 14
A. Safety Rest Area Building ..... 9 - 14
B. Welcome Center Building ..... 9 - 14
9.8 WEIGH-IN-MOTION SCALE SYSTEM ..... 9 - 14
9.9 PLANTING DESIGN GUIDELINES FOR WELCOME CENTERS AND SAFETY REST AREAS ..... 9 - 14

CHAPTER 10 DRAINAGE DESIGN AND RELATED PROCEDURES

10.0 INTRODUCTION ..... 10 - 1
10.1 PROCEDURE FOR COMPLYING WITH WATERWAY AND FLOODPLAIN MANAGEMENT REQUIREMENTS OR REGULATIONS ..... 10 - 3
A. General ..... 10 - 3
10.2 ESTIMATING PEAK DISCHARGES FOR ROADWAY DRAINAGE FACILITIES ..... 10 - 10
A. General ..... 10 - 10
B. Accumulation of Preliminary Data ..... 10 - 11
C. Estimating Peak Discharge ..... 10 - 12
D. Storm Duration ..... 10 - 13
E. Time of Concentration ..... 10 - 14
10.3 CAPACITY OF ROADWAY HYDRAULIC FACILITIES ..... 10 - 15
A. Pavement Drainage, Roadside Drainage, and Subsurface Pipes ..... 10 - 16
B. Storm Sewer Systems ..... 10 - 32
C. Pipe Culverts ..... 10 - 39
D. Pavement Base Drains ..... 10 - 40
E. Stormwater Management Facilities ..... 10 - 44
F. Superstructure Drainage ..... 10 - 44
G. Roadway Drainage Report ..... 10 - 44
H. Hydraulic Computation Approval ..... 10 - 45
10.4 FILL HEIGHT CRITERIA AND TABLES FOR CONCRETE, METAL AND THERMOPLASTIC PIPES ..... 10 - 45
A. Reinforced Concrete Pipes and Elliptical Pipes ..... 10 - 45
B. Metal Pipes and Pipe Arches ..... 10 - 45
C. Thermoplastic Pipes ..... 10 - 46
10.5 WATERWAY APPROVAL ..... 10 - 46
A. JPA_2 Expert System ..... 10 - 46
B. Obtain Waterway Approval Process ..... 10 - 47
C. PA DEP Permit and PFBC Approval ..... 10 - 49
D. US Coast Guard Bridge Permit ..... 10 - 55
E. USACE Permits ..... 10 - 55
F. FHWA and Other Approvals ..... 10 - 55
10.6 CRITERIA FOR APPLICABILITY OF HYDROLOGIC AND HYDRAULIC METHODOLOGIES ..... 10 - 55
A. Introduction ..... 10 - 55
B. Purpose and Scope ..... 10 - 55
C. Models, Methodologies and Site Histories ..... 10 - 55
D. Other Models ..... 10 - 64
E. Design Storms ..... 10 - 64
F. Adjustments to Peak Flow Estimates ..... 10 - 66
10.7 GUIDELINES FOR PREPARATION OF HYDROLOGIC AND HYDRAULIC REPORT ..... 10 - 66
A. Overview ..... 10 - 66
B. Abbreviated H&H Report Outline ..... 10 - 67
C. Full H&H Report Outline ..... 10 - 69
D. Abbreviated and Full H&H Reports ..... 10 - 77
10.8 PROCEDURE FOR OBTAINING PERMITS FROM THE US COAST GUARD ..... 10 - 85
A. Navigable Waters of the United States ..... 10 - 85
B. Jurisdiction of Coast Guard Districts ..... 10 - 85
C. Navigable Waters in Pennsylvania Requiring Coast Guard Bridge Permits ..... 10 - 87
D. Applications for Bridge Permits ..... 10 - 88
10.9 PROCEDURE FOR OBTAINING PERMITS FROM THE US ARMY CORPS OF ENGINEERS ..... 10 - 89
A. Section 404 ..... 10 - 90
B. Section 10 ..... 10 - 91
C. Regional General Permit ..... 10 - 91
D. Chapter 105/PASPGP General Permit Registration Form ..... 10 - 92
E. Nationwide Permit (NWP) ..... 10 - 92

F. Agency Coordination Meeting ..... 10 - 93
G. USACE Districts ..... 10 - 93
H. Navigable Waters in Pennsylvania Requiring USACE Permits ..... 10 - 93
I. USACE Water Resources Development Projects ..... 10 - 95
J. Application for Permits from the USACE ..... 10 - 96
K. Advance Processing of Department of the Army Permit ..... 10 - 96
L. Application for Approvals for Work in USACE Water Resources Projects Areas ..... 10 - 97
M. Preliminary Consultation with the USACE ..... 10 - 98
10.10 CHANNEL CONSTRUCTION INVOLVING FISHABLE STREAMS ..... 10 - 98
A. Design Procedures ..... 10 - 98
B. No Construction Crossing ..... 10 - 100
C. Plan Requirements ..... 10 - 100
10.11 LOW FLOW FISH PASSAGE THROUGH HIGHWAY CULVERTS ..... 10 - 100
A. Purpose ..... 10 - 100
B. Background ..... 10 - 100
C. Policy/Procedure ..... 10 - 100
D. Design Guidelines ..... 10 - 100
E. Fish Passage Methods/Alternates ..... 10 - 101
F. Multi-Cell Culvert Installations ..... 10 - 102
G. Conclusions ..... 10 - 102
10.12 ABANDONED WATER SUPPLY SOURCES ..... 10 - 109
A. Standard Special Provisions ..... 10 - 109
B. Drilled or Driven Wells ..... 10 - 109
C. Dug Wells ..... 10 - 109
D. Springs ..... 10 - 109

APPENDIX A Procedures for Coordinating Highway Encroachments on Floodplains with the Federal Emergency Management Agency (FEMA) ..... 10A - 1

APPENDIX B Fill Height Tables for Pipes and Pipe Arches ..... 10B - 1

APPENDIX C Hydraulic Modeling Requirements for PENNDOT H&H Reports ..... 10C - 1

APPENDIX D Hydrologic and Hydraulic Checklists ..... 10D - 1

APPENDIX E FHWA References on Hydrology and Hydraulics ..... 10E - 1

APPENDIX F Policy for Use of HEC-RAS in the NFIP ..... 10F - 1

APPENDIX G Joint Agency Guidance for Permitting Requirements for Hydraulic Modeling of Temporary Construction Activities ..... 10G - 1

APPENDIX H Permit Coordination Procedures for Erosion and Sediment Pollution Control Plan Approvals and NPDES Permits ..... 10H - 1

APPENDIX I Clarification of Consistency Letter Requirements for Stormwater Management Analysis and Floodplain Management Analysis ..... 10I - 1

CHAPTER 11 PAVEMENT DESIGN

11.0 INTRODUCTION ..... 11 - 1

CHAPTER 12 GUIDE RAIL, MEDIAN BARRIER AND ROADSIDE SAFETY DEVICES

12.0 INTRODUCTION ..... 12 - 1
12.1 THE CLEAR ZONE CONCEPT ..... 12 - 1
A. Foreslopes ..... 12 - 3
B. Backslopes ..... 12 - 3

C. Transverse Slopes ..... 12 - 6
12.2 BREAKAWAY SUPPORTS ..... 12 - 6
12.3 TRAFFIC BARRIER UPDATES AS PART OF NEW CONSTRUCTION, RECONSTRUCTION, 3R, PAVEMENT PRESERVATION AND BRIDGE PROJECTS ..... 12 - 7
A. Guide Rail, Guide Rail End Treatments, and Terminals (excluding crash cushions on rigid barriers) ..... 12 - 7
B. Concrete Barriers (excluding bridge barriers) and Associated Crash Cushions ..... 12 - 9
C. High-Tension Cable Barrier ..... 12 - 10
D. Bridge Barriers (includes median and outside barriers adjacent to vehicular traffic) ..... 12 - 10
E. Guide Rail to Bridge Barrier Transitions ..... 12 - 10
F. Remove and Reset Conditions ..... 12 - 11
G. Delineation ..... 12 - 11
12.4 ROADSIDE BARRIERS ..... 12 - 12
A. Performance Requirements ..... 12 - 12
B. Standard Roadside Barriers ..... 12 - 12
C. Roadside Barrier Guidelines ..... 12 - 12
D. Design and Selection Procedures ..... 12 - 14
E. Guide Rail Standard Conditions ..... 12 - 16
F. Other Guide Rail Conditions ..... 12 - 16
G. Embankment Protection ..... 12 - 19
H. Protection from Roadside Obstructions ..... 12 - 20
I. Non-Traversable Roadside Obstructions ..... 12 - 21
J. Utility Poles and Trees ..... 12 - 21
K. Guide Rail End Treatments and Terminals ..... 12 - 22
L. Powder Coated Guide Rail ..... 12 - 23
M. Type 31 Strong Post Guide Rail with Curb and No Omitted Posts ..... 12 - 24
N. Type 31 Strong Post Guide Rail with Omitted Guide Rail Posts ..... 12 - 24
O. Nested Guide Rail ..... 12 - 25
P. Type 31 Strong Post In-Line Anchor ..... 12 - 25
Q. Guide Rail with Short Radius ..... 12 - 26
R. Steel Posts over Underground Structures ..... 12 - 26
12.5 ROADSIDE BARRIER PLACEMENT ..... 12 - 26
A. Lateral Offset ..... 12 - 26
B. Terrain Effects ..... 12 - 27
C. Flare Rate ..... 12 - 27
D. Length of Need ..... 12 - 28
E. Example Problems ..... 12 - 32
12.6 MEDIAN BARRIER ..... 12 - 35
A. Median Barrier Guidelines ..... 12 - 35
B. Selection Guidelines ..... 12 - 38
C. Median Barrier End Treatments ..... 12 - 39
D. High-Tension Cable Barrier ..... 12 - 41
E. Gate Barrier Systems ..... 12 - 54
12.7 CONCRETE MEDIAN BARRIER ..... 12 - 56
12.8 SINGLE FACE CONCRETE BARRIER ..... 12 - 59
A. General Considerations ..... 12 - 59
B. Typical Treatments Behind Barrier ..... 12 - 60
C. End Treatments for Single Face Concrete Barrier ..... 12 - 61
D. Moment Slab with Barrier and Transition ..... 12 - 62
E. Trailing End Guide Rail Connection for Divided Highways or One-Way Roadways ..... 12 - 62
F. Typical Placement at Piers Adjacent to Shoulders ..... 12 - 62
G. Typical Placement at Piers in Medians ..... 12 - 62
H. Single Face Concrete Barrier Transitions ..... 12 - 63
12.9 IMPACT ATTENUATING DEVICES ..... 12 - 63
A. Introduction ..... 12 - 63
B. Performance Requirements ..... 12 - 63
C. Terminal Characteristics ..... 12 - 63
D. Site Grading Requirements ..... 12 - 64
E. Crashworthy End Treatments ..... 12 - 65

F. Design Considerations and Criteria ..... 12 - 69
G. Approval Policy ..... 12 - 69
12.10 TEMPORARY BARRIERS ..... 12 - 70
A. Introduction ..... 12 - 70
B. Need for Temporary Barriers ..... 12 - 70
C. Performance Requirements ..... 12 - 71
D. Material and Construction Requirements ..... 12 - 71
E. Lateral Placement of Temporary Barrier in a Dropoff Condition ..... 12 - 72
12.11 BRIDGE RAILING TEST LEVEL SELECTION GUIDELINES ..... 12 - 75
A. Introduction ..... 12 - 75
B. Standard Bridge Railing Test Levels ..... 12 - 75
C. Alternate Bridge Railing Test Levels ..... 12 - 76
D. Risk-Based Test Level Selection ..... 12 - 78
12.12 RUMBLE STRIPS ..... 12 - 93
A. General Considerations ..... 12 - 93
B. Accommodation of All Road Users ..... 12 - 95
C. Mitigation ..... 12 - 96
D. Public Involvement and Outreach ..... 12 - 97
E. Coordination with Other Roadway Improvements ..... 12 - 97
F. Guidance on Shoulder and Edge Line Rumble Strips (SRS/ERS) ..... 12 - 97
G. Guidance on Centerline Rumble Strips (CLRS) ..... 12 - 98
H. Combined SRS/ERS/CLRS ..... 12 - 99
I. Installation/Reinstallation of Rumble Strips ..... 12 - 99
J. Installation and Reinstallation of Rumble Strips on Thin Pavement Overlays ..... 12 - 99
12.13 SAFETY EDGE ..... 12 - 103

APPENDIX A Reserved for Future Use ..... 12A - 1
APPENDIX B Gate Barrier Systems ..... 12B - 1
APPENDIX C Temporary Barriers ..... 12C - 1
APPENDIX D Reserved for Future Use ..... 12D - 1
APPENDIX E Roadside Barriers and End Treatments Checklist and Documentation for Non-Standard Condition ..... 12E - 1

CHAPTER 13 EROSION AND SEDIMENT POLLUTION CONTROL

13.0 INTRODUCTION ..... 13 - 1
13.1 CONSIDERATIONS RELEVANT TO CONSTRUCTION ..... 13 - 1
13.2 SEEDING AND MULCHING STABILIZATION ..... 13 - 3
A. Standard Highway Seeding Mixtures ..... 13 - 3
B. Other Soil Conservation Seed Mixtures ..... 13 - 4
C. General Design Guidelines ..... 13 - 5
D. Species Guidelines ..... 13 - 6
E. Specification Preparation and Approvals ..... 13 - 12
F. Seed Quality ..... 13 - 12
G. Seed Bed Preparation ..... 13 - 14
H. Mulching ..... 13 - 14
13.3 OTHER STABILIZATION METHODS ..... 13 - 15
A. Discussion ..... 13 - 15
B. Approved Measures ..... 13 - 15
13.4 EROSION CONTROL MEASURES ..... 13 - 16
A. Discussion ..... 13 - 16
B. Approved Measures ..... 13 - 16
C. Design Flows ..... 13 - 16
13.5 SEDIMENT POLLUTION CONTROL DEVICES ..... 13 - 16
A. Discussion ..... 13 - 16
B. Approved Devices ..... 13 - 17

13.6 PREPARATION AND PROCESSING OF EROSION AND SEDIMENT POLLUTION CONTROL PLANS ....13 - 17
A. Plan Preparation ....13 - 17
B. Implementation and Maintenance ....13 - 18
C. Other Necessary Actions for Project Compliance ....13 - 18
13.7 ANTIDEGRADATION AND POST CONSTRUCTION STORMWATER MANAGEMENT POLICY ....13 - 20
A. Introduction ....13 - 20
B. Definitions ....13 - 21
C. Design Standards and Calculations ....13 - 23
D. Act 167 SMPs and Municipal Ordinances ....13 - 26
E. Special Protection Surface Water Discharge Analysis ....13 - 26
F. Impaired Surface Waters ....13 - 26
G. Municipal Separate Storm Sewer Systems (MS4) ....13 - 27
H. Riparian Buffers ....13 - 27
I. Stormwater Control Measures ....13 - 27
J. Soil Profile and Infiltration Testing ....13 - 28
K. SCM Inventory Data ....13 - 29
L. PCSM Plan ....13 - 29
M. PCSM on Non-Chapter 102 Permit Projects ....13 - 29
N. Off-site Discharges ....13 - 30

CHAPTER 14 COST ESTIMATING

14.0 INTRODUCTION ....14 - 1

CHAPTER 15 RESERVED FOR FUTURE USE

CHAPTER 16 BICYCLE FACILITIES

CHAPTER 17 EMERGENCY ESCAPE RAMPS

CHAPTER 18 TEMPORARY ROADS AND BRIDGES

18.0 INTRODUCTION ....18 - 1
18.1 DEFINITIONS ....18 - 1
18.2 TRAFFIC CONTROL ....18 - 2
18.3 TEMPORARY ROAD ....18 - 2
A. Single-Lane Temporary Road ....18 - 2
B. Two-Lane Temporary Road ....18 - 3
C. Guide Rail ....18 - 4
D. Side Slopes ....18 - 4
E. Pavement Type and Shoulder Type ....18 - 4
18.4 TEMPORARY BRIDGE ....18 - 4
18.5 WATERWAY OPENING - PA DEP PERMIT ....18 - 5
A. Temporary Stream Crossing (Pipes) ....18 - 5
B. Temporary Bridge ....18 - 5

CHAPTER 19 CONSIDERATIONS FOR ALTERNATIVE TRANSPORTATION MODES

19.0 INTRODUCTION ....19 - 1
19.1 BICYCLE FACILITIES ....19 - 1

19.2 PEDESTRIAN FACILITIES ..... 19 - 1
A. Sidewalks ..... 19 - 1
B. Sidewalk and Buffer Widths ..... 19 - 1
C. Medians ..... 19 - 2
D. Crosswalks ..... 19 - 2
19.3 PUBLIC TRANSPORTATION ..... 19 - 3
A. Vehicle Types ..... 19 - 3
B. Bus Stops ..... 19 - 3
C. Turn-outs ..... 19 - 4
D. Bus Stop Characteristics ..... 19 - 5
E. Bus Stop Amenities ..... 19 - 5

CHAPTER 20 WILDLIFE CROSSINGS

INTENTIONALLY BLANK

LIST OF FIGURES

FIGURE	SUBJECT	PAGE
2.9	Typical Permanent Median Crossover	2 - 2
2.10	Typical Dual Median Crossovers at State or County Lines	2 - 3
3.1	Key Roundabout Characteristics	3 - 7
3.2	Roundabout Category Comparison	3 - 8
3.3	Planning Framework	3 - 9
3.4	Planning-Level Daily Intersection Volumes	3 - 10
3.5	Selection of Analysis Tool	3 - 11
3.6	Basic Geometric Elements of a Roundabout	3 - 12
3.7	General Roundabout Design Process	3 - 13
6.1	Minimum Clear Width Dimensions	6 - 19
6.2	Wheelchair Turning Space	6 - 20
6.3	Protruding Objects	6 - 21
6.3	(Continued) Protruding Objects	6 - 22
6.4	Examples of Edge Protection and Handrail Extensions	6 - 29
6.5	Size and Spacing of Handrails and Grab Bars	6 - 30
6.6	Stair/Step Handrails	6 - 31
6.7	Usable Tread Width and Examples of Acceptable Nosings	6 - 33
6.8	Curb Ramps at Marked Crosswalks	6 - 39
6.9	Curb Ramps at Marked Crosswalks	6 - 39
6.10	Design Considerations: Utilities in Path of Travel	6 - 40
6.11	Design Considerations: Non-Perpendicular Type 1 Curb Ramps	6 - 41
6.12	Design Considerations: Type 1 Curb Ramps Without Landings	6 - 41
6.13	Design Considerations: Steep Flares in PAR	6 - 42
6.14	Design Considerations: Steep Curb Ramps	6 - 42
6.15	Design Considerations: Vertical Drops in PAR	6 - 43
6.16	Design Considerations: Ponding at Curb Ramps	6 - 43
6.17	Design Considerations: Depressed Curb and Blended Transitions	6 - 44
6.18	Design Considerations: Plan Details	6 - 45
6.19	Design Considerations: Ramp and Flare Calculations	6 - 46
6.20	(Metric) Design Considerations: Ramp and Flare Length Charts	6 - 47
6.20	(Metric) (Continued) Design Considerations: Ramp and Flare Length Charts	6 - 48
6.20	(Metric) (Continued) Design Considerations: Ramp and Flare Length Charts	6 - 49
6.20	(Metric) (Continued) Design Considerations: Ramp and Flare Length Charts	6 - 50
6.20	(Metric) (Continued) Design Considerations: Ramp and Flare Length Charts	6 - 51
6.20	(English) Design Considerations: Ramp and Flare Length Charts	6 - 52
6.20	(English) (Continued) Design Considerations: Ramp and Flare Length Charts	6 - 53
6.20	(English) (Continued) Design Considerations: Ramp and Flare Length Charts	6 - 54
6.20	(English) (Continued) Design Considerations: Ramp and Flare Length Charts	6 - 55
6.20	(English) (Continued) Design Considerations: Ramp and Flare Length Charts	6 - 56
7.1	Driveway Apron Grades	7 - 7
7.2	Type 1 Driveway Apron	7 - 9
7.3	Type 1A Driveway Apron	7 - 9
7.4	Type 2 Driveway Apron	7 - 10
7.5	Type 2A Driveway Apron	7 - 10
7.6	Type 3 Driveway Apron	7 - 11
7.7	Type 3A Driveway Apron	7 - 11
7.8	Type 4 Driveway Apron	7 - 12
9.1	Dimensions for Car Parking Spaces	9 - 4
9.2	Standard Accessible Parking Stalls	9 - 6

9.3 Van Accessible Parking Stalls ....9 - 7
9.4 Universal Accessible Parking Stalls ....9 - 8
9.5 Dimensions for Truck Parking Spaces (Design Vehicle WB-20 (WB-67)) ....9 - 9

10.3.1 (Metric) Efficiency Curves: Capacity of Type C Inlet or Type M Inlet (Mountable Curb)....10 - 21
10.3.2 (Metric) Efficiency Curves: Capacity of Type C Inlet or Type M Inlet (Mountable Curb)....10 - 21
10.3.1 (English) Efficiency Curves: Capacity of Type C Inlet or Type M Inlet (Mountable Curb)....10 - 22
10.3.2 (English) Efficiency Curves: Capacity of Type C Inlet or Type M Inlet (Mountable Curb)....10 - 22
10.3.3 (Metric) Efficiency Curves: Capacity of Type C Inlet or Type M Inlet (Mountable Curb)....10 - 23
10.3.4 (Metric) Efficiency Curves: Capacity of Type C Inlet or Type M Inlet (Mountable Curb)....10 - 23
10.3.3 (English) Efficiency Curves: Capacity of Type C Inlet or Type M Inlet (Mountable Curb)....10 - 24
10.3.4 (English) Efficiency Curves: Capacity of Type C Inlet or Type M Inlet (Mountable Curb)....10 - 24
10.3.5 (Metric) Capacity of Type M Inlet (Median) or Type S Inlet at Sump Condition....10 - 27
10.3.6 (Metric) Capacity of Type M Inlet (Median) or Type S Inlet at Sump Condition....10 - 27
10.3.5 (English) Capacity of Type M Inlet (Median) or Type S Inlet at Sump Condition ....10 - 28
10.3.6 (English) Capacity of Type M Inlet (Median) or Type S Inlet at Sump Condition ....10 - 28
10.3.7 (Metric) Hydraulic Capacities of D-H Inlet and Alternate ....10 - 29
10.3.7 (English) Hydraulic Capacities of D-H Inlet and Alternate....10 - 30
10.3.8 (Metric) Computation Table for Preliminary Storm Sewer Design....10 - 34
10.3.8 (English) Computation Table for Preliminary Storm Sewer Design ....10 - 35
10.3.9 (Metric) Nomograph for the Selection of Maximum Outlet Spacing (L) for Pavement Base Drains ....10 - 42
10.3.9 (English) Nomograph for the Selection of Maximum Outlet Spacing (L) for Pavement Base Drains ....10 - 43
10.5.1 Example of ATON Sign Specification for Placement Upstream and Downstream of Project Area....10 - 52
10.5.2 Examples of ATON Sign Specification to Provide Safe Portage Around a Project Area....10 - 53
10.7.1 Sample Summary Data Sheet ....10 - 76
10.7.2 Scenario 2 Example Transmittal Letters for Municipal Coordination....10 - 82
10.7.2 (Continued) Scenario 2 Example Transmittal Letters for Municipal Coordination....10 - 83
10.7.2 (Continued) Scenario 2 Example Transmittal Letters for Municipal Coordination....10 - 84
10.8.1 US Coast Guard District Boundaries in Pennsylvania....10 - 86
10.9.1 US Corps of Engineers District Boundaries in Pennsylvania ....10 - 94
10.10.1 Elevated Flood Plain....10 - 99
10.11.1 Depressed Culvert with Fish Baffles Using the Standard Method....10 - 103
10.11.2 Depressed Culvert with Fish Baffles Using the Alternate Method....10 - 103
10.11.3 Open Bottom Culverts ....10 - 108

12.1 Example of a Parallel Embankment Slope Design ....12 - 5
12.2 Breakaway Support Stub Height Measurements....12 - 6
12.3 Placement of W-Beam Guide Rail on Slopes for Optimum Performance ....12 - 18
12.4 Example of Other Installation for Strong Post Guide Rail on 1V:2H or Flatter Fill Slope....12 - 18
12.5 Approach Barrier Layout....12 - 29
12.6 Approach Barrier Layout for Opposing Traffic ....12 - 30
12.7 Roadside Slopes for Approach Barriers....12 - 31
12.8 Example of Barrier Design for Bridge Approach ....12 - 32
12.9 Example of Barrier Design for Nontraversable Embankment ....12 - 33
12.10 Example of Barrier Design for Fixed Object on Horizontal Curve ....12 - 34
12.11 Median Barrier Guidelines on High-Speed, Fully Controlled-Access Roadways ....12 - 36
12.12 Example Layout for Shielding an Opening Between Dual Structures....12 - 40
12.13 Underride Criteria for High-Tension Cable Barrier in V-Shaped Medians for All Cross Slopes....12 - 44
12.14 Override Criteria for High-Tension Cable Barrier in V-Shaped Medians ....12 - 44
12.15 Underride Criteria for High-Tension Cable Barrier for Flat-Bottom Medians ....12 - 45
12.16 Override Criteria for High-Tension Cable Barrier for Flat-Bottom Medians ....12 - 45
12.17 Overlap of Two High-Tension Cable Barrier Systems (Near Side to Far Side) ....12 - 47
12.18 Overlap of Two High-Tension Cable Barrier Systems (Far Side to Near Side) ....12 - 48
12.19 Example of End Terminal Shielding for High-Tension Cable Barrier (Bridge End)....12 - 49
12.20 Example of Narrow Median Crossover for High-Tension Cable Barrier ....12 - 51

12.21 Horizontal Curve Placement for High-Tension Cable Barrier ..... 12 - 52
12.22 Example of Elevation View with Alternate Design for Concrete Median Barrier Transition ..... 12 - 58
12.23 Lateral Placement of Temporary Barrier in a Dropoff Condition ..... 12 - 73
12.24 Lifetime Encroachments / 1,000 ft of Bridge Railing Nomograph ..... 12 - 87
12.25 Test Level Selection Nomograph (Risk < 0.01 in 30 Years for 1000 ft of Bridge Railing) ..... 12 - 88
12.26 Alternate Bridge Railing Test Level Authorization ..... 12 - 89
12.27 Standard Bridge Railing Test Levels (Flowchart supplements Section 12.11.B) ..... 12 - 90
12.28 Alternate Bridge Railing Test Level Selection (Flowchart supplements Section 12.11.C) ..... 12 - 91
12.29 Risk-Based Test Level Selection (Flowchart supplements Section 12.11.D) ..... 12 - 92
12.30 Typical Terminology for Rumble Strips ..... 12 - 94
12.31 Example Layout of Shoulder Rumble Strips ..... 12 - 100

13.1 Special Provision Format for Special Seeding Mixtures ..... 13 - 13

INTENTIONALLY BLANK

LIST OF TABLES

TABLE **SUBJECT** **PAGE**

4.1 Ramp Design Sheet....4 - 9
4.1 (Continued) Ramp Design Sheet....4 - 10

5.1 Recommended Pavement Illuminance Criteria for Roundabouts with Asphalt Pavement....5 - 11
5.2 Recommended Pavement Illuminance Criteria for Roundabouts with Concrete Pavement....5 - 11
5.3 Pavement Illuminance Criteria for Isolated Roundabouts....5 - 12
5.4 Transition Zones Based on Roundabout Illuminance Levels....5 - 13
5.5 Transition Zone Lengths Based on Roundabout Exit Speed and Downstream Speed Limit....5 - 14

6.1 Ramps Between Landing Areas....6 - 28

9.1 Required Minimum Number of Accessible Car Spaces at Safety Rest Areas....9 - 5
9.2 Demand Weight of Fixtures in Fixture Units....9 - 13
9.3 Conversion of Fixture Units to Equivalent L/s (gal/min)....9 - 13

10.2.1 Runoff Factors for the Rational Equation....10 - 13
10.2.2 (Metric) Recommended Average Velocities of Overland Flow for Determining Time of Concentration....10 - 14
10.2.2 (English) Recommended Average Velocities of Overland Flow for Determining Time of Concentration....10 - 14
10.3.1 Capacity of Type C Inlet or Type M Inlet (Mountable Curb)....10 - 19
10.3.2 (Metric) Capacity of Type C Inlet or Type M Inlet (Mountable Curb) at Sump Condition....10 - 19
10.3.2 (English) Capacity of Type C Inlet or Type M Inlet (Mountable Curb) at Sump Condition....10 - 20
10.3.3 (Metric) Capacity of Type M Inlet (Median) or Type S Inlet....10 - 25
10.3.3 (English) Capacity of Type M Inlet (Median) or Type S Inlet....10 - 26
10.3.4 Determining Inlet Box Types....10 - 31
10.3.5 Alternate Pipe Selection Criteria Based Upon Location of Drainage Pipes....10 - 37
10.3.5 (Continued) Alternate Pipe Selection Criteria Based Upon Location of Drainage Pipes....10 - 38
10.3.6 Roughness Coefficient "n" for Manning's Equation for Pavement Base Drains....10 - 41
10.6.1 Design Flood Selection Guidelines....10 - 65
10.11.1 (Metric) Manning's "n" Values for Alternate Method of Modeling Box Culverts with Fish Baffles and Slope > 4%....10 - 104
10.11.1 (English) Manning's "n" Values for Alternate Method of Modeling Box Culverts with Fish Baffles and Slope > 4%....10 - 105
10.11.2 (Metric) Manning's "n" Values for Alternate Method of Modeling Box Culverts with Fish Baffles and Slope ≤ 4%....10 - 106
10.11.2 (English) Manning's "n" Values for Alternate Method of Modeling Box Culverts with Fish Baffles and Slope ≤ 4%....10 - 107
10.B.1 (Metric) Table of Contents - Fill Height Tables Included in BD-636M for Reinforced Concrete Pipes and Elliptical Pipes....10B - 1
10.B.1 (English) Table of Contents - Fill Height Tables Included in BD-636M for Reinforced Concrete Pipes and Elliptical Pipes....10B - 2
10.B.2 (Metric) Table of Contents - Allowable Fill Heights for Metal Pipes and Pipe Arches....10B - 3
10.B.2 (English) Table of Contents - Allowable Fill Heights for Metal Pipes and Pipe Arches....10B - 4
10.B.3 (Metric) Allowable Fill Heights for Corrugated Galvanized Steel Pipes (68 mm × 13 mm Corrugations)....10B - 5
10.B.3 (English) Allowable Fill Heights for Corrugated Galvanized Steel Pipes (2 2/3 in × 1/2 in Corrugations)....10B - 6
10.B.4 (Metric) Allowable Fill Heights for Corrugated Galvanized Steel Pipes (75 mm × 25 mm Corrugations)....10B - 7
10.B.4 (English) Allowable Fill Heights for Corrugated Galvanized Steel Pipes (3 in × 1 in Corrugations)....10B - 8

10.B.5 (Metric) Allowable Fill Heights for Corrugated Galvanized Steel Pipes (125 mm × 25 mm Corrugations) ..... 10B - 9
10.B.5 (English) Allowable Fill Heights for Corrugated Galvanized Steel Pipes (5 in × 1 in Corrugations) ..... 10B - 10
10.B.6 (Metric) Allowable Fill Heights for Corrugated Aluminized Steel Pipes (68 mm × 13 mm Corrugations) ..... 10B - 11
10.B.6 (English) Allowable Fill Heights for Corrugated Aluminized Steel Pipes (2 2/3 in × 1/2 in Corrugations) ..... 10B - 12
10.B.7 (Metric) Allowable Fill Heights for Corrugated Aluminized Steel Pipes (75 mm × 25 mm Corrugations) ..... 10B - 13
10.B.7 (English) Allowable Fill Heights for Corrugated Aluminized Steel Pipes (3 in × 1 in Corrugations) ..... 10B - 14
10.B.8 (Metric) Allowable Fill Heights for Corrugated Aluminized Steel Pipes (125 mm × 25 mm Corrugations) ..... 10B - 15
10.B.8 (English) Allowable Fill Heights for Corrugated Aluminized Steel Pipes (5 in × 1 in Corrugations) ..... 10B - 16
10.B.9 (Metric) Allowable Fill Heights for Corrugated Galvanized Steel Pipes (68 mm × 13 mm Corrugations) Polymer Coated (≤ 1.5 m/s) ..... 10B - 17
10.B.9 (English) Allowable Fill Heights for Corrugated Galvanized Steel Pipes (2 2/3 in × 1/2 in Corrugations) Polymer Coated (≤ 5 ft/s) ..... 10B - 18
10.B.10 (Metric) Allowable Fill Heights for Corrugated Galvanized Steel Pipes (75 mm × 25 mm Corrugations) Polymer Coated (≤ 1.5 m/s) ..... 10B - 19
10.B.10 (English) Allowable Fill Heights for Corrugated Galvanized Steel Pipes (3 in × 1 in Corrugations) Polymer Coated (≤ 5 ft/s) ..... 10B - 20
10.B.11 (Metric) Allowable Fill Heights for Corrugated Galvanized Steel Pipes (125 mm × 25 mm Corrugations) Polymer Coated (≤ 1.5 m/s) ..... 10B - 21
10.B.11 (English) Allowable Fill Heights for Corrugated Galvanized Steel Pipes (5 in × 1 in Corrugations) Polymer Coated (≤ 5 ft/s) ..... 10B - 22
10.B.12 (Metric) Allowable Fill Heights for Corrugated Galvanized Steel Pipes (68 mm × 13 mm Corrugations) Polymer Coated (> 1.5 m/s) ..... 10B - 23
10.B.12 (English) Allowable Fill Heights for Corrugated Galvanized Steel Pipes (2 2/3 in × 1/2 in Corrugations) Polymer Coated (> 5 ft/s) ..... 10B - 24
10.B.13 (Metric) Allowable Fill Heights for Corrugated Galvanized Steel Pipes (75 mm × 25 mm Corrugations) Polymer Coated (> 1.5 m/s) ..... 10B - 25
10.B.13 (English) Allowable Fill Heights for Corrugated Galvanized Steel Pipes (3 in × 1 in Corrugations) Polymer Coated (> 5 ft/s) ..... 10B - 26
10.B.14 (Metric) Allowable Fill Heights for Corrugated Galvanized Steel Pipes (125 mm × 25 mm Corrugations) Polymer Coated (> 1.5 m/s) ..... 10B - 27
10.B.14 (English) Allowable Fill Heights for Corrugated Galvanized Steel Pipes (5 in × 1 in Corrugations) Polymer Coated (> 5 ft/s) ..... 10B - 28
10.B.15 (Metric) Allowable Fill Heights for Corrugated Aluminum Alloy Pipes (68 mm × 13 mm Corrugations) ..... 10B - 29
10.B.15 (English) Allowable Fill Heights for Corrugated Aluminum Alloy Pipes (2 2/3 in × 1/2 in Corrugations) ..... 10B - 30
10.B.16 (Metric) Allowable Fill Heights for Corrugated Aluminum Alloy Pipes (75 mm × 25 mm Corrugations) ..... 10B - 31
10.B.16 (English) Allowable Fill Heights for Corrugated Aluminum Alloy Pipes (3 in × 1 in Corrugations) ..... 10B - 32
10.B.17 (Metric) Allowable Fill Heights for Corrugated Galvanized Steel Pipe Arches (68 mm × 13 mm Corrugations) ..... 10B - 33
10.B.17 (English) Allowable Fill Heights for Corrugated Galvanized Steel Pipe Arches (2 2/3 in × 1/2 in Corrugations) ..... 10B - 34
10.B.18 (Metric) Allowable Fill Heights for Corrugated Galvanized Steel Pipe Arches (75 mm × 25 mm Corrugations) ..... 10B - 35
10.B.18 (English) Allowable Fill Heights for Corrugated Galvanized Steel Pipe Arches (3 in × 1 in Corrugations) ..... 10B - 36
10.B.19 (Metric) Allowable Fill Heights for Corrugated Galvanized Steel Pipe Arches (125 mm × 25 mm Corrugations) ..... 10B - 37

10.B.19 (English) Allowable Fill Heights for Corrugated Galvanized Steel Pipe Arches (5 in × 1 in Corrugations) ..... 10B - 38
10.B.20 (Metric) Allowable Fill Heights for Corrugated Aluminized Steel Pipe Arches (68 mm × 13 mm Corrugations) ..... 10B - 39
10.B.20 (Metric) (Continued) Allowable Fill Heights for Aluminized Steel Pipe Arches (68 mm × 13 mm Corrugations) ..... 10B - 40
10.B.20 (English) Allowable Fill Heights for Corrugated Aluminized Steel Pipe Arches (2 2/3 in × 1/2 in Corrugations) ..... 10B - 41
10.B.21 (Metric) Allowable Fill Heights for Corrugated Aluminized Steel Pipe Arches (75 mm × 25 mm Corrugations) ..... 10B - 42
10.B.21 (Metric) (Continued) Allowable Fill Heights for Corrugated Aluminized Steel Pipe Arches (75 mm × 25 mm Corrugations) ..... 10B - 43
10.B.21 (English) Allowable Fill Heights for Corrugated Aluminized Steel Pipe Arches (3 in × 1 in Corrugations) ..... 10B - 44
10.B.22 (Metric) Allowable Fill Heights for Corrugated Aluminized Steel Pipe Arches (125 mm × 25 mm Corrugations) ..... 10B - 45
10.B.22 (English) Allowable Fill Heights for Corrugated Aluminized Steel Pipe Arches (5 in × 1 in Corrugations) ..... 10B - 46
10.B.23 (Metric) Allowable Fill Heights for Corrugated Galvanized Steel Pipe Arches (68 mm × 13 mm Corrugations) Polymer Coated (≤ 1.5 m/s) ..... 10B - 47
10.B.23 (English) Allowable Fill Heights for Corrugated Galvanized Steel Pipe Arches (2 2/3 in × 1/2 in Corrugations) Polymer Coated (≤ 5 ft/s) ..... 10B - 48
10.B.24 (Metric) Allowable Fill Heights for Corrugated Galvanized Steel Pipe Arches (75 mm × 25 mm Corrugations) Polymer Coated (≤ 1.5 m/s) ..... 10B - 49
10.B.24 (English) Allowable Fill Heights for Corrugated Galvanized Steel Pipe Arches (3 in × 1 in Corrugations) Polymer Coated (≤ 5 ft/s) ..... 10B - 50
10.B.25 (Metric) Allowable Fill Heights for Corrugated Galvanized Steel Pipe Arches (125 mm × 25 mm Corrugations) Polymer Coated (≤ 1.5 m/s) ..... 10B - 51
10.B.25 (English) Allowable Fill Heights for Corrugated Galvanized Steel Pipe Arches (5 in × 1 in Corrugations) Polymer Coated (≤ 5 ft/s) ..... 10B - 52
10.B.26 (Metric) Allowable Fill Heights for Corrugated Galvanized Steel Pipe Arches (68 mm × 13 mm Corrugations) Polymer Coated (> 1.5 m/s) ..... 10B - 53
10.B.26 (English) Allowable Fill Heights for Corrugated Galvanized Steel Pipe Arches (2 2/3 in × 1/2 in Corrugations) Polymer Coated (> 5 ft/s) ..... 10B - 54
10.B.27 (Metric) Allowable Fill Heights for Corrugated Galvanized Steel Pipe Arches (75 mm × 25 mm Corrugations) Polymer Coated (> 1.5 m/s) ..... 10B - 55
10.B.27 (English) Allowable Fill Heights for Corrugated Galvanized Steel Pipe Arches (3 in × 1 in Corrugations) Polymer Coated (> 5 ft/s) ..... 10B - 56
10.B.28 (Metric) Allowable Fill Heights for Corrugated Galvanized Steel Pipe Arches (125 mm × 25 mm Corrugations) Polymer Coated (> 1.5 m/s) ..... 10B - 57
10.B.28 (English) Allowable Fill Heights for Corrugated Galvanized Steel Pipe Arches (5 in × 1 in Corrugations) Polymer Coated (> 5 ft/s) ..... 10B - 58
10.B.29 (Metric) Allowable Fill Heights for Corrugated Aluminum Alloy Pipe Arches (68 mm × 13 mm Corrugations) ..... 10B - 59
10.B.29 (English) Allowable Fill Heights for Corrugated Galvanized Steel Pipe Arches (2 2/3 in × 1/2 in Corrugations) ..... 10B - 60
10.B.30 (Metric) Allowable Fill Heights for Corrugated Aluminum Alloy Pipe Arches (75 mm × 25 mm Corrugations) ..... 10B - 61
10.B.30 (Metric) (Continued) Allowable Fill Heights for Corrugated Aluminum Alloy Pipe Arches (75 mm × 25 mm Corrugations) ..... 10B - 62
10.B.30 (English) Allowable Fill Heights for Corrugated Aluminum Alloy Pipe Arches (3 in × 1 in Corrugations) ..... 10B - 63
10.B.31 (Metric) Allowable Fill Heights for Spiral Rib Aluminized Steel Pipes (19 mm × 19 mm × 190 mm Corrugations) ..... 10B - 64
10.B.31 (English) Allowable Fill Heights for Spiral Rib Aluminized Steel Pipes (3/4 in × 3/4 in × 7 1/2 in Corrugations) ..... 10B - 65
10.B.32 (Metric) Allowable Fill Heights for Spiral Rib Aluminum Alloy Pipes (19 mm × 19 mm × 190 mm Corrugations) ..... 10B - 66

10.B.32 (English) Allowable Fill Heights for Spiral Rib Aluminum Alloy Pipes
(3/4 in × 3/4 in × 7 1/2 in Corrugations)..... 10B - 67
10.B.33 (Metric) Allowable Fill Heights for Spiral Rib Aluminized Steel Pipe Arches
(19 mm × 19 mm × 190 mm Corrugations)..... 10B - 68
10.B.33 (English) Allowable Fill Heights for Spiral Rib Aluminized Steel Pipe Arches
(3/4 in × 3/4 in × 7 1/2 in Corrugations)..... 10B - 69
10.B.34 (Metric) Allowable Fill Heights for Spiral Rib Aluminum Alloy Pipe Arches
(19 mm × 19 mm × 190 mm Corrugations)..... 10B - 70
10.B.34 (English) Allowable Fill Heights for Spiral Rib Aluminum Alloy Pipe Arches
(3/4 in × 3/4 in × 7 1/2 in Corrugations)..... 10B - 71
10.B.35 Fill Height Table Thermoplastic Pipes
(for Pipes 450 mm (18 in) Diameter or Larger)..... 10B - 72

12.1 Clear Zone Width (in feet from edge of through traveled way)..... 12 - 2
12.2 Horizontal Curve Adjustments K_{cz} (Curve Correction Factor)..... 12 - 4
12.3 Crash Testing Parameters for Longitudinal Barriers ..... 12 - 13
12.4 Guide Rail and Median Barrier Systems ..... 12 - 15
12.5 Weak Post W-Beam Guide Rail Systems on Curves..... 12 - 16
12.6 Barrier Requirements for Embankment Heights..... 12 - 19
12.7 Guide Rail Requirements for Fixed Objects Within the Clear Zone ..... 12 - 21
12.8 Flare Rates for Barrier Design..... 12 - 27
12.9 Design Parameters for Roadside Barrier Layout ..... 12 - 29
12.10 MASH Test Level Criteria for High-Tension Cable Barrier Systems ..... 12 - 41
12.11 Design/Location Guidelines for High-Tension Cable Barrier Systems ..... 12 - 55
12.12 Concrete Median Barriers for Permanent Roadway Installations..... 12 - 56
12.13 Single Face Concrete Barriers (F-Shape) for Permanent Roadway Installations..... 12 - 59
12.14 Lifetime Encroachments Per 1,000 ft of Bridge Railing..... 12 - 85
12.15 Site-Specific Encroachment Adjustment Factors ..... 12 - 86
12.16 Existing Rumble Strips and Thin Overlays..... 12 - 102

13.1 Species for Erosion Control and Soil Conservation Plantings..... 13 - 9
13.2 Recommended Seed Mixtures for Permanent Cover for Soil Conservation Plantings ..... 13 - 10
13.3 Soil Conservation Planting Areas ..... 13 - 11
13.4 Seeding Application Rate Conversion Chart ..... 13 - 11

19.1 Bus Stop Spacing..... 19 - 5

INTENTIONALLY BLANK

BLANK PAGE

CHAPTER 1

GENERAL DESIGN

Refer to Publication 13, Design Manual Part 2, *Contextual Roadway Design*.

CHAPTER 2

DESIGN ELEMENTS AND DESIGN CONTROLS

Refer to Publication 13, Design Manual Part 2, *Contextual Roadway Design*, for much of the content that was previously presented in this Chapter as part of Publication 13M, March 2015 Edition, Change #9.

The following content remains in this Chapter from Section 2.18.U until it is able to be moved into Publication 13, Design Manual Part 2, *Contextual Roadway Design*.

2.18 OTHER ELEMENTS AFFECTING GEOMETRIC DESIGN

U. Median Crossovers. Consideration shall be given to providing openings in medians on Interstate and other Limited Access Freeways for use by emergency and other authorized vehicles. Median crossovers are also intended to be used where operation of snow and ice removal equipment to clear interchange ramps would be expedited. The need for such openings shall be determined by the District Executive and their use shall conform to the guidelines presented below. Median barrier and end treatments, if required at these locations, shall be constructed as indicated on the Standard Drawings. Crossovers should never be provided unless justified. Median crossovers constructed on Interstate Highways shall be approved by the Federal Highway Administration (FHWA). A submission shall be made to the Central Office, Bureau of Project Delivery, Highway Delivery Division, Highway Design and Technology Section for this purpose.

Median crossovers can be used on Interstate and Non-Interstate Limited Access Freeways when the median width is greater than 33 ft. If crossovers are required in a median where the width is not greater than 33 ft, coordination with the Central Office, Bureau of Project Delivery, Highway Delivery Division, Highway Design and Technology Section is required. Median crossovers can be located as follows:

1. Where the distance between the ends of speed-change tapers for adjacent interchanges is less than 4 mi, one median crossover may be provided. This crossover should be constructed at a suitable location midway between the interchanges, but not closer than 1,500 ft from the end of any speed-change taper or structure. Crossovers should be located only where above-minimum stopping sight distance is provided and preferably should not be located on superelevated curves.

2. Where the distance between the ends of speed-change tapers for adjacent interchanges is greater than 4 mi), two or more median crossovers may be provided. These crossovers shall be provided at no less than 3 mi intervals, and shall not be constructed closer than 1,500 ft from the end of any speed-change taper or structure.

3. One set of dual crossovers may be located at or near a State or County line if the proximity of the nearest interchange or median crossover is greater than 1 mi. The intent of the dual crossovers is to allow for the safe operation of winter maintenance activities, eliminating the need for winter maintenance vehicles to back up to a crossover after plowing or spreading materials beyond the crossover. If an acceptable location for dual crossovers cannot be established at the State or County line, the pair may be shifted to the nearest acceptable location that has adequate sight distance. If dual crossovers are required, coordination with the Central Office, Bureau of Project Delivery, Highway Delivery Division, Highway Design and Technology Section is required.

All median crossovers shall conform to the typical detail shown in Figure 2.9. They shall be constructed with a paved surface, paved shoulders, and deceleration lanes as shown. A typical detail for dual crossovers at or near a State or County line is shown in Figure 2.10.

The location of median crossovers should be coordinated with proposed or existing median drainage systems to eliminate exposed pipe end sections that could present an obstacle to errant vehicles. Where cross pipes are deemed necessary, careful thought should be given to providing a safe, hydraulically-efficient drainage system that uses proper drainage appurtenances to eliminate undesirable conditions. The kind, size, and location of the drainage system required is dependent on actual field conditions.

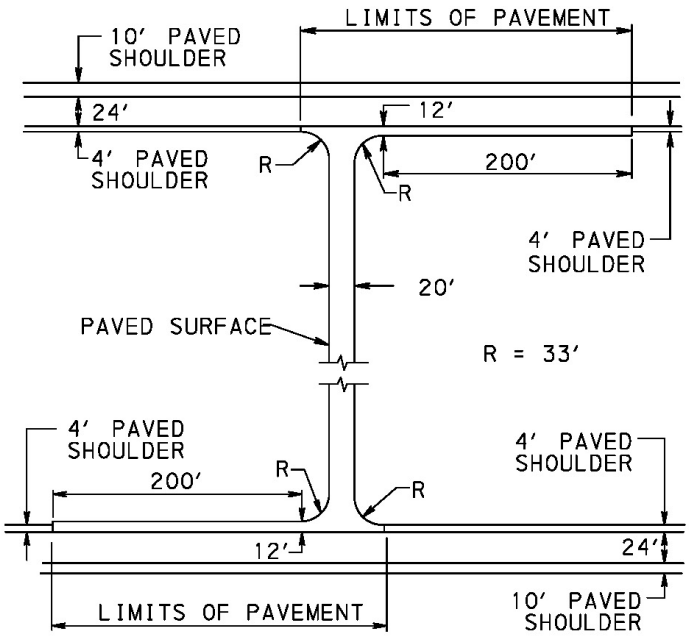

1. TRANSVERSE SLOPES SHOULD BE A MINIMUM 1V:12H WITH RESPECT TO THE CROSSOVER PAVEMENT, FLAT AND FREE OF ROADSIDE OBSTRUCTIONS.
2. LONGITUDINAL SLOPES SHOULD BE A MINIMUM 1V:6H WITH RESPECT TO THE CROSSOVER PAVEMENT, UNLESS PROTECTED BY A GUIDE RAIL.
3. PAVED SURFACE SHALL CONSIST OF: 1½" HMA WEARING COURSE, 4" HMA BASE COURSE, 6" SUBBASE OR 1½" HMA WEARING COURSE, 6" AGG-BIT, 6" SUBBASE.
4. WHEN CONCRETE SHOULDERS ARE PROVIDED ON THE MAINLINE, THE 4' CONCRETE SHOULDER SHALL BE CONTINUED THROUGH THE DECELERATION LANE AND CROSSOVER AREA. THE ADDITIONAL 8' WIDENING FOR THE DECELERATION LANE AND THE CROSSOVER PAVEMENT SHALL BE A PAVED SURFACE CONSISTING OF: 1½" HMA WEARING COURSE, 4" HMA BASE COURSE, 6" SUBBASE OR 1½" HMA WEARING COURSE, 6" AGG-BIT, 6" SUBBASE.

FIGURE 2.9
TYPICAL PERMANENT
MEDIAN CROSSOVER

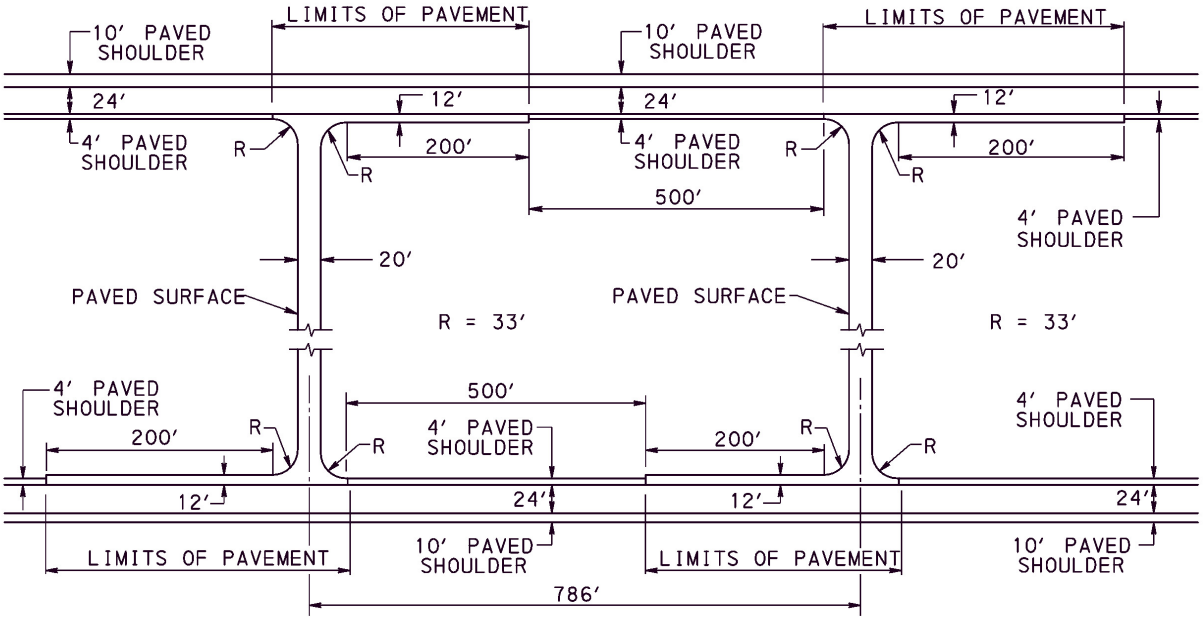

1. TRANSVERSE SLOPES SHOULD BE A MINIMUM 1V:12H WITH RESPECT TO THE CROSSOVER PAVEMENT, FLAT AND FREE OF ROADSIDE OBSTRUCTIONS.
2. LONGITUDINAL SLOPES SHOULD BE A MINIMUM 1V:6H WITH RESPECT TO THE CROSSOVER PAVEMENT, UNLESS PROTECTED BY A GUIDE RAIL.
3. PAVED SURFACE SHALL CONSIST OF: 1½" HMA WEARING COURSE, 4" HMA BASE COURSE, 6" SUBBASE OR 1½" HMA WEARING COURSE, 6" AGG-BIT, 6" SUBBASE.
4. WHEN CONCRETE SHOULDERS ARE PROVIDED ON THE MAINLINE, THE 4' CONCRETE SHOULDER SHALL BE CONTINUED THROUGH THE DECELERATION LANE AND CROSSOVER AREA. THE ADDITIONAL 8' WIDENING FOR THE DECELERATION LANE AND THE CROSSOVER PAVEMENT SHALL BE A PAVED SURFACE CONSISTING OF: 1½" HMA WEARING COURSE, 4" HMA BASE COURSE, 6" SUBBASE OR 1½" HMA WEARING COURSE, 6" AGG-BIT, 6" SUBBASE.

FIGURE 2.10
TYPICAL DUAL MEDIAN
CROSSOVERS AT STATE
OR COUNTY LINES

All exposed culvert end sections shall be designed to ensure they can be safely negotiated by errant vehicles. The ends of the pipe should be sloped to match the side slopes of the crossover. All pipe openings greater than 18 in in diameter should be designed to provide safe traversability by using a grate, longitudinal or transverse bars or a combination thereof. Embankment slopes in the crossover area should be 1V:6H minimum, longitudinally and 1V:12H minimum, transversely (1V:20H desirable), with respect to the crossover pavement.

In order to limit usage to emergency and other authorized vehicles, appropriate signing and delineation shall be used (see Traffic Standard TC-8604).

When eliminating existing crossovers, proper coordination should be conducted with local emergency management officials to ensure their operations are not significantly impacted.

INTENTIONALLY BLANK

CHAPTER 3

INTERSECTIONS

3.0 INTRODUCTION

By definition, an intersection is the general area where two or more highways join or cross including the roadway and roadside facilities for traffic movements within the area. Since each intersection involves innumerable vehicle movements, these movements may be facilitated by various geometric design and traffic control depending on the type of intersection. The three general types of highway crossings are: (1) at-grade intersections, (2) grade separations without ramps and (3) interchanges.

The most important design considerations for intersections fall into two major categories: (1) the geometric design including a capacity analysis and (2) the location and type of traffic control devices. For the most part, these considerations are applicable to both new and existing intersections, although on existing intersections in built-up areas, heavy development may make extensive design changes impractical.

The design elements, capacity analysis and traffic control concepts presented in this Chapter apply to intersections and their appurtenant features. Additional sources of information and criteria to supplement the concepts presented in this Chapter are contained in the 2011 AASHTO Green Book, Chapter 9, "Intersections" and the *MUTCD*.

3.1 OBJECTIVES AND FACTORS FOR DESIGN CONSIDERATIONS

The main objective of intersection design is to facilitate the convenience, ease and comfort of people traversing the intersection while enhancing the efficient movement of motor vehicles, buses, trucks, bicycles, and pedestrians.

Refer to the 2011 AASHTO Green Book, Chapter 9, Section 9.2, "General Design Considerations and Objectives" for details about the four basic elements that should be considered in intersection design: human factors, traffic considerations, physical elements, and economic factors. These should be identified and evaluated prior to selecting the type of design used.

An intersection is defined by both its functional and physical areas. The functional area of an intersection extends both upstream and downstream from the physical intersection area and includes any auxiliary lanes and their associated channelization. For exhibits describing the functional intersection area, refer to the 2011 AASHTO Green Book, Chapter 9, Figures 9-1 and 9-2.

Intersection design should achieve balance among the needs of all roadway user groups. Design considerations for users include motor vehicles, transit, pedestrians, and bicyclists.

In addition to the users of the street and intersections, owners and users of adjacent land often have a direct interest in the intersection design. This interest can be particularly sensitive where the intersection is surrounded by retail, commercial, historic, or institutional land uses. The primary concerns include maintenance of vehicular access to private property; turn restrictions; consumption of private property for right-of-way; and provisions for convenient pedestrian access.

3.2 TYPES OF INTERSECTIONS

The basic types of intersections are determined primarily by the number of intersecting legs, the topography, the character of the intersecting highways, the traffic volumes, patterns and speeds, and the desired type of operation. The basic types of intersections include: (1) the three-leg or T, (2) the four-leg, (3) the multileg (with five or more intersection legs), and (4) roundabouts.

Limited sight distance may make it necessary to control traffic by yield signs, stop signs or traffic signals where the traffic densities are less than those ordinarily considered necessary for such control. The alignment and grade of the intersecting roadways and the angle of intersection may make it advisable to channelize or use auxiliary pavement areas, regardless of the traffic densities. In general, traffic service, highway design designation, physical conditions and cost of right-of-way are considered jointly in choosing the type of intersection.

It is not practical to indicate all possible variations; however, the basic types are presented in the 2011 AASHTO Green Book, Chapter 9, Figures 9-3 through 9-13 to illustrate the general application of intersection design. A basic intersection type can vary greatly in scope, shape, flaring of the pavement for auxiliary lanes, and degree of channelization. Although many factors enter into the selection of the type of intersection and the extent of design, the principal control factors for the type of intersection design required are the design-hour traffic volume, the character or composition of traffic and the design speed. In selecting the type of intersection, the most significant factor is the traffic volume (actual and relative) involved in various turning and through movements. Once the type of intersection is established, the design controls and criteria and the elements of intersection design shall be applied to arrive at a suitable geometric plan. The modern roundabout may also be considered a type of intersection design and is discussed in more detail in Section 3.5. For additional information on variations of the basic types of intersections, their treatments and applications, refer to the 2011 AASHTO Green Book, Chapter 9, Section 9.3, "Types and Examples of Intersections".

3.3 GEOMETRIC DESIGN ELEMENTS

At intersections, various geometric design elements should be considered to accommodate the type and amount of traffic and the turning movements that are expected.

A. Alignment and Profile. Since intersections represent points of conflict between vehicles, pedestrians and bicycles, the alignment and profile of the intersecting roads should permit users to easily recognize the intersection and vehicles using it, and readily perform the maneuvers needed to pass through the intersection with minimum interference. The alignment should be as straight and the gradients as flat as practical. The sight distance should be equal to or greater than the minimum values for specific intersection conditions. If design objectives are not met, users may have difficulty in discerning the actions of other users, in reading and discerning the messages of traffic control devices, and in controlling their operations.

For an alignment, design considerations should:

- Have intersecting roads generally meet at or nearly at right angles.
- Avoid short-radius horizontal curves on side road approaches to achieve right-angle intersections.
- Consider making an offset intersection to realign roads intersecting at acute angles.
- Avoid intersections on sharp curves because of possible complications from superelevation, widening of pavements, and reduced sight distance.

For a profile, design considerations should:

- Avoid combinations of grade lines that make vehicle control difficult.
- Avoid substantial grade changes.
- Provide adequate sight distance along both intersecting roads and across their included corners.
- Provide gradients as flat as practical on those sections that are to be used for storage of stopped vehicles.
- Adjust profile gradelines and cross sections on legs of an intersection a distance back from the intersection proper to provide a smooth junction and proper drainage.

For a more detailed discussion of considerations for alignments and profiles, refer to the 2011 AASHTO Green Book, Chapter 9, Section 9.4, "Alignment and Profile".

B. Types of Turning Roadways. The widths of turning roadways for intersections are governed by the volumes of turning traffic and the types of vehicles to be accommodated. In almost all cases, turning roadways are designed for use by right-turning traffic. The widths for right-turning roadways may also be applied to other roadways within an intersection, such as between channelizing islands.

There are three typical types of right-turning roadways at intersections: (1) a minimum edge-of-traveled-way design; (2) a design with a corner triangular island; and (3) a free-flow design using a simple radius or compound radii. The turning radii and the pavement cross slopes for free-flow right turns are functions of design speed and type of vehicles.

As a control for the geometric design of turning roadways, the largest design vehicle likely to use that facility with considerable frequency, or a design vehicle with special characteristics that must be taken into account in dimensioning the facility, is used to determine the design of such critical features as radii at intersections and radii of turning roadways.

There are four general classes of design vehicles, namely (1) passenger cars, (2) buses, (3) trucks, and (4) recreational vehicles. Dimensions for 20 typical design vehicles, representing vehicles within these general classes, are presented in the 2011 AASHTO Green Book, Chapter 2, Table 2-1b. The minimum radii of the outside and inside wheel paths and the centerline radii for specific design vehicles are presented in the 2011 AASHTO Green Book, Chapter 2, Table 2-2b. The minimum turning paths for 20 typical design vehicles are illustrated in the 2011 AASHTO Green Book, Chapter 2, Figures 2-1 through 2-23. These exhibits should be used as a guide to determine the turning radii at intersections and the width of turning roadways.

The values for the minimum radii for intersection curves for operation at design speed, and the derived pavement widths for turning roadways for different design vehicles, shall conform to the values derived in the 2011 AASHTO Green Book, Chapter 3, Tables 3-8, 3-9, 3-10b and 3-28b, respectively.

Where it is appropriate to provide for turning vehicles within minimum space and with minimum attainable speeds less than 15 km/h (10 mph), as at unchannelized intersections, the corner radii should be based on minimum turning paths of the design vehicles. In the design of the edge of the traveled way based on the path of a given design vehicle, the vehicle is assumed to be properly positioned within the traffic lane at the beginning and end of the turn, i.e., 0.6 m (2 ft) from the edge of traveled way on the tangents approaching and leaving the intersection curve. The minimum curve designs for edge of traveled way conforming to this assumption are shown in the 2011 AASHTO Green Book, Chapter 9, Figures 9-23 through 9-30.

For most simple intersections with an angle of turn equal to 90° or less, a single circular arc joining the tangent edges of pavement provides an adequate design. However, where provisions must be made for large design vehicles or when the angle of turn exceeds 90°, a three-centered curve to fit the traffic conditions may be selected. An alternate design that closely approximates the three-centered curve layout consists of a simple offset curve with connecting tapers. The suggested minimum designs in which simple curves and three-centered compound curves are used for each design vehicle when making the sharpest turn are indicated in the 2011 AASHTO Green Book, Chapter 9,Tables 9-15 and 9-16, respectively.

For additional information on intersection curves relative to widths and turning paths applicable to the various design vehicles, refer to the 2011 AASHTO Green Book, Chapter 9, Section 9.6.1, "Types of Turning Roadways".

C. Sight Distance. As a general consideration, the sight distance should be equal to or greater than the minimum values for specific intersection conditions.

Specified areas along intersection approach legs and across their included corners should be clear of obstructions that might block a driver's view of potentially conflicting vehicles. These specified areas are known as clear sight triangles. The dimensions of the legs of the sight triangles depend on the design speeds of the intersecting roadways and the type of traffic control used at the intersection.

For more information about sight triangles at intersections, refer to the 2011 AASHTO Green Book, Chapter 9, Section 9.5.2, "Sight Triangles".

For additional sight distance considerations at intersections, refer to Chapter 2, Section 2.17 and the 2011 AASHTO Green Book, Chapter 9, Section 9.5, "Intersection Sight Distance".

D. Superelevation. The general factors that control the maximum rates of superelevation, as discussed in Chapter 2, Section 2.13, also apply to turning roadways at intersections. When entering or leaving a superelevated curve, the problem of how fast to introduce or remove the superelevation rate arises. The control of the rate of cross slope change for curves at intersections is that of riding comfort and appearance and shall be determined in accordance with the 2011 AASHTO Green Book, Chapter 9, Table 9-19.

For additional information concerning superelevation for curves at intersections, refer to the 2011 AASHTO Green Book, Chapter 9, Section 9.6.6, "Superelevation for Turning Roadways at Intersections".

E. Islands. An island is a defined area between traffic lanes used to control vehicle movements. Islands generally are either elongated or triangular in shape whose dimensions are dependent on the particular intersection conditions. They serve three primary functions:

1. Channelization (to control and direct traffic movement, usually turning).
2. Division (to divide opposing or same-direction traffic streams, usually through movements).
3. Refuge (to provide refuge for pedestrians).

For additional information concerning island sizes and designations, delineation, approach-end treatments and island designs based on turning roadways, refer to the 2011 AASHTO Green Book, Chapter 9, Section 9.6.3, "Islands".

F. Median Openings. Intersections include median openings to accommodate crossing and turning traffic movements. Where appropriate, median openings may also be provided for U-turns. Factors to consider are the median width, the location and length of the opening and the design of the median ends, and the character and volume of through and turning traffic. Median openings should reflect street or block spacing and the access classification of the roadway. In addition, full median openings should be consistent with traffic signal spacing criteria.

An important factor in designing median openings is the path of each design vehicle making a minimum turn at 15 to 25 km/h (10 to 15 mph). The 2011 AASHTO Green Book, Chapter 9, Section 9.8.2, "Control Radii for Minimum Turning Paths", discusses the minimum turning paths of various design vehicles and the minimum practical radii for the design of median ends.

The ends of medians at openings may be either a semicircular shape or a bullet nose shape. The minimum designs for the shape of median ends are shown in the 2011 AASHTO Green Book, Chapter 9, Tables 9-25 through 9-29 and Figures 9-55 through 9-59.

For any three-leg or four-leg intersections on a divided highway, the length of median opening is determined by the widths of the intersecting highways. The minimum opening should be as long as the width of the crossroad traveled way pavement plus shoulders. Where the crossroad is a divided highway, the length of opening should be at least equal to the width of the crossroad traveled ways plus the width of the median. In general, median openings longer than 25 m (80 ft) should be avoided, regardless of skew.

Above-minimum designs for direct left turns are often appropriate for intersections where through-traffic volumes and speeds are high and left-turn movements are important. At such intersections median openings should be long enough to permit turns without encroachment on adjacent lanes. Longer median openings enable higher speed turns and provide space for vehicle protection while turning or stopping.

For further discussion of median openings, including general design considerations, control radii for minimum turning paths, end shapes and dimensional requirements, refer to the 2011 AASHTO Green Book, Chapter 9, Section 9.8, "Median Openings".

G. Auxiliary Lanes. In general, auxiliary lanes are used preceding median openings and at intersections preceding right- and left-turning movements. Auxiliary lanes may also be added to increase capacity and reduce crashes at an intersection. In many cases, an auxiliary lane may be desirable after completing a right-turn movement to provide for acceleration, maneuvering, and weaving.

An auxiliary lane refers to that portion of the roadway adjoining the traveled lanes that may be provided for median openings and for intersections to supplement through-traffic movements. Their length shall be dependent on the individual lengths of three components: (1) entering taper, (2) deceleration length and (3) storage length. Desirably, the total length of the auxiliary lane should be the sum of the length for these components.

To preclude or minimize undue acceleration and deceleration that may arise from conflicts between high speeds on the through roadway and stopped or near-stopped conditions for traffic entering or leaving the through roadway at intersections, auxiliary lanes are provided on highways having expressway characteristics and are frequently used at other intersections on main highways and streets. An auxiliary lane, including the tapered area, serves as a speed-change lane primarily for the acceleration or deceleration of vehicles entering or leaving the through-traffic lanes.

Although warrants for the use of auxiliary lanes cannot be stated definitely, the general conclusions and considerations for their use are contained in Chapter 1, Section 1.6. For additional information and design guidance relative to auxiliary lanes, including taper rates for lane drops, refer to the 2011 AASHTO Green Book, Chapter 9, Section 9.7, "Auxiliary Lanes" and Publication 46, *Traffic Engineering Manual*, Chapter 11.

H. Direct and Indirect Left Turns and U-Turns. The various design methods and arrangements to accommodate left-turn and U-turn movements are predicated on the design control dimensions (width of median and width of crossroad or street) and the size of vehicle used for design control. The demands for left- or U-turn maneuvers in the urban or heavily developed residential or commercial sectors may create inefficient traffic operations. The general design for direct and indirect left-turn and U-turns (including jughandle or loop roadways, displaced left-turn intersections, wide medians with U-turn crossover roadways, and location and design of U-turn median openings) and for continuous and simultaneous left-turn lanes are contained in the 2011 AASHTO Green Book, Chapter 9, Section 9.7.3, "Design Treatments for Left-Turn Maneuvers" and Section 9.9, "Indirect Left Turns and U-Turns".

I. Curb Radii for Turning Movements in Urban Areas. Because of space limitations, pedestrians, and lower operating speeds, curve radii used for turning movements may be smaller in urban areas than in rural areas. Curb radii should be based on the number and types of turning vehicles and pedestrian volumes.

The 2011 AASHTO Green Book, Chapter 9, Section 9.6.1, "Types of Turning Roadways", "Corner Radii into Local Urban Streets", provides guidelines for right-turning and corner radii.

The 2011 AASHTO Green Book, Chapter 9, Figures 9-31 through 9-33 and Table 9-17 indicate how curb radii are influenced with and without the presence of parking lanes.

Corner radii at intersections should satisfy needs of the drivers using them, the amount of right-of-way available, the angle of turn between the intersection legs, numbers of pedestrians using the crosswalk, the width and number of lanes on the intersecting streets and the posted speeds on each street. The 2011 AASHTO Green Book, Chapter 9, Section 9.6.1, "Types of Turning Roadways", "Effect of Curb Radii on Pedestrians", offers a guide with various dimensions of radii.

For additional guidelines on curb radii for turning movements in urban areas, refer to the 2011 AASHTO Green Book, Chapter 9, Section 9.6.1, "Types of Turning Roadways".

J. Free-Flow Turning Roadways at Intersections. Many intersections feature free-flow turning roadways alignment for right-turn movements. Ease and smoothness of operation can result when the free-flow turning roadway is designed with compound curves preceded by a right-turn deceleration lane. Refer to the 2011 AASHTO Green Book, Chapter 9, Section 9.6.4, "Free-Flow Turning Roadways at Intersections" for guidance on the shape and length of these curves.

The design speed of free-flow turning roadways may be equal to, or possibly within 20 to 30 km/h (10 to 20 mph) less than the through roadway design speed. Turning roadways at intersections should use the "upper range" design speeds whenever practical, although the "middle range" speeds may be used in constrained situations.

K. Channelization. Channelization is the separation or regulation of conflicting traffic movements into definite paths of travel by traffic islands or pavement markings to facilitate the orderly movements of both vehicles and pedestrians. A simple channelization improvement can sometimes result in dramatic operational efficiencies and reduction in crash frequencies. Separation of left-turn movements from through movements, such as left-turn lanes at intersections, reduce rear-end exposure and provide a comfortable means for making a left turn.

The 2011 AASHTO Green Book, Chapter 9, Section 9.6.2, "Channelization", identifies the factors and principles that should be considered for channelization of intersections.

Design controls for a channelized intersection include the type of design vehicle, cross sections on the crossroads, projected traffic volumes, pedestrian traffic, vehicle speed, bus stop locations and the type and location of traffic control devices. The physical controls such as right-of-way and terrain have an effect on the extent of channelization that is economically practical.

L. Additional Design Considerations. In addition to the design concepts presented above, additional considerations relevant to intersection design include the items listed below. For information and design guidance for these items, refer to the reference indicated:

1. Frontage road design elements. (2011 AASHTO Green Book, Chapter 9, Section 9.11.1, "Intersection Design Elements with Frontage Roads")

2. Traffic control devices. (2011 AASHTO Green Book, Section 9.11.2, "Traffic Control Devices")

3. Bicycles. (2011 AASHTO Green Book, Section 9.11.3, "Bicycles")

4. Pedestrians. (2011 AASHTO Green Book, Chapter 9, Section 9.11.4, "Pedestrians" and Chapter 6)

5. Lighting. (2011 AASHTO Green Book, Chapter 9, Section 9.11.5, "Lighting" and Chapter 5)

6. Driveways. (2011 AASHTO Green Book, Chapter 9, Section 9.11.6, "Driveways"; provisions of 67 PA Code § 441; and Chapter 7)

7. Midblock left turns on streets with flush medians. (2011 AASHTO Green Book, Chapter 9, Section 9.11.7, "Midblock Left Turns on Streets with Flush Medians").

8. Railroad-highway grade crossings. (2011 AASHTO Green Book, Chapter 9, Section 9.12, "Railroad-Highway Grade Crossings"; Chapter 2, Section 2.18.D; and Publication 371, *Grade Crossing Manual*)

9. Roundabouts. (2011 AASHTO Green Book, Chapter 9, Section 9.10, "Roundabout Design"; Chapter 3, Section 3.5; and NCHRP Report 672, *Roundabouts: An Informational Guide, Second Edition*)

10. Traffic calming. (Publication 383, *Pennsylvania's Traffic Calming Handbook*)

3.4 HIGHWAY CAPACITY ANALYSIS AND TRAFFIC CONTROL

The criteria, procedures and guidance for highway capacity analysis used on all Department projects shall comply with capacity concepts presented in the *HCM*. Where traffic signal controls may be required for intersections, the warrants for their installation shall be governed by the sources of reference listed in Chapter 2, Section 2.18.A.

3.5 ROUNDABOUTS

A. Introduction. A roundabout is a form of circular intersection in which traffic travels counterclockwise around a central island and in which entering traffic must yield to circulating traffic. Modern roundabouts are distinctly different from other forms of circular intersections (rotaries, signalized traffic circles, etc.). Figure 3.1 illustrates the key characteristics of a modern roundabout.

Figure 3.1: Key Roundabout Characteristics

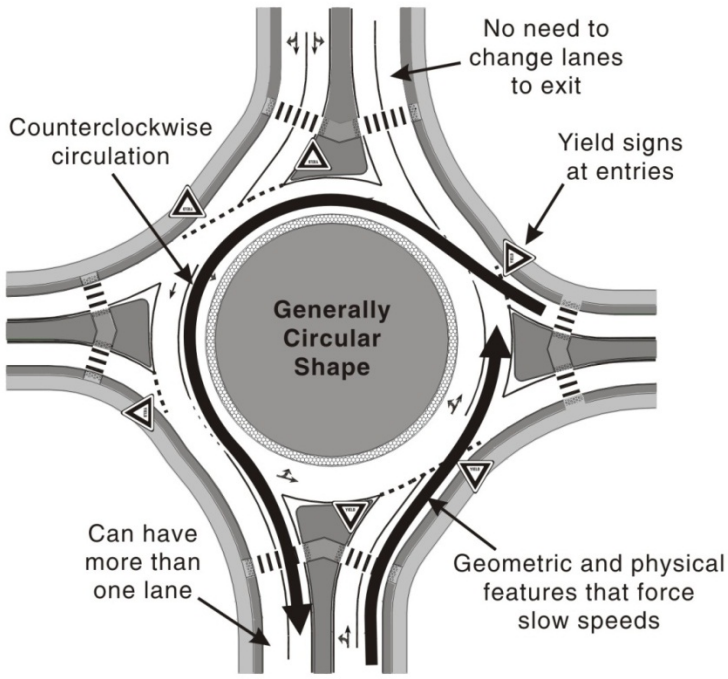

Modern roundabouts have demonstrated safety and operational benefits and should be considered as an alternative for intersection improvement projects. They can offer several advantages over signalized and stop controlled alternatives, including better overall safety performance, shorter delays, shorter queues (particularly during off-peak periods), better management of speeds, and opportunities for community enhancement or aesthetic features.

This section is not intended to be an exhaustive review of roundabouts, but rather is meant to emphasize the key principles related to roundabouts. For detailed guidance, the user should refer to National Cooperative Highway Research Program (NCHRP) Report 672, *Roundabouts: An Informational Guide, Second Edition*. A principle-based approach to design is recommended, noting that each roundabout will have its own unique design based on the context and goals of a particular project. There will never be a "cookie-cutter" design for a roundabout.

When planning intersection improvements, a variety of improvement alternatives should be evaluated, including roundabouts, to determine the most appropriate alternative.

B. Planning. At the planning stage, there are a variety of possible reasons or goals for considering a roundabout at a particular intersection, including but not limited to safety, operations, access management, and aesthetics. Questions to consider once a roundabout is identified as feasible include:

- Is a roundabout appropriate for this location?
- How big should it be or how many lanes are required?
- What sort of impacts are expected?
- What public education and outreach is appropriate?
- How can the construction phasing accommodate the existing traffic?

NCHRP Report 672, Chapter 1 presents a range of roundabout categories and suggested typical daily service volume thresholds below which four-leg roundabouts are expected to operate, without requiring a detailed capacity analysis. Chapter 2 introduces roundabout performance characteristics, including comparisons with other forms of intersection control. By confirming that there is a reason to believe that a roundabout is feasible and the best alternative, these planning activities avoid expending unnecessary effort required in more detailed steps.

The initial steps in planning for a roundabout are to clarify the objectives and understand the context in which the roundabout is being considered. The next step is to specify a preliminary configuration. This identifies the minimum number of lanes required on each approach and thus which type of roundabout is the most appropriate to use a basis for design: mini, single-lane, or multilane. Note that mini-roundabouts are not recommended for use on State roadways.

Figure 3.2 summarizes and compares some fundamental design and operational elements for each of the three roundabout categories.

Figure 3.2: Roundabout Category Comparison

Design Element	Mini-Roundabout	Single-Lane Roundabout	Multilane Roundabout
Desirable maximum entry design speed	15 to 20 mph (25 to 30 km/h)	20 to 25 mph (30 to 40 km/h)	25 to 30 mph (40 to 50 km/h)
Maximum number of entering lanes per approach	1	1	2-3
Typical inscribed circle diameter	45 to 90 ft (13 to 27 m)	90 to 180 ft (27 to 55 m)	150 to 300 ft (46 to 91 m)
Central island treatment	Fully traversable	Raised (may have traversable apron)	Raised (may have traversable apron)
Typical daily service volumes on 4-leg roundabout below which may be expected to operate without requiring a detailed capacity analysis (veh/day)*	Up to approximately 15,000	Up to approximately 25,000	Up to approximately 45,000 for two-lane roundabout

*Operational analysis needed to verify upper limit for specific applications or for roundabouts with more than two lanes or four legs.

Figure 3.3 outlines many of the considerations that may need to be investigated prior to deciding whether to implement a roundabout at an intersection. Note that this is not meant to be all-encompassing, nor is it intended to reflect minimum requirements. Rather, it is intended to provide a general framework for the steps typically necessary to determine feasibility.

Figure 3.3: Planning Framework

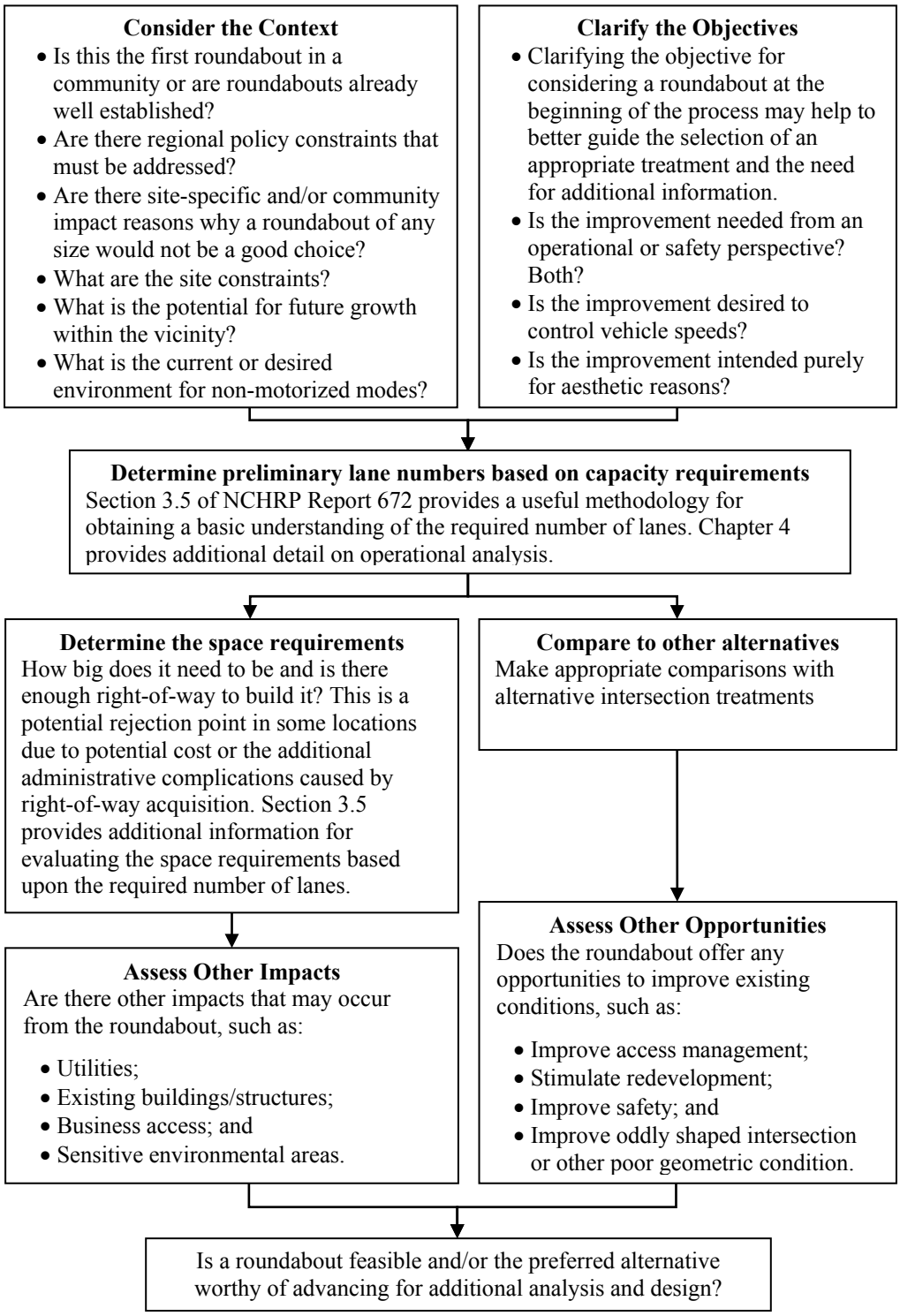

High-level planning often requires an initial screening of alternatives where turning-movement data may not be available but Annual Average Daily Traffic (AADT) volumes are known. Figure 3.4 presents ranges of AADT volumes to identify scenarios under which single-lane and two-lane roundabouts may perform adequately.

Figure 3.4: Planning-Level Daily Intersection Volumes

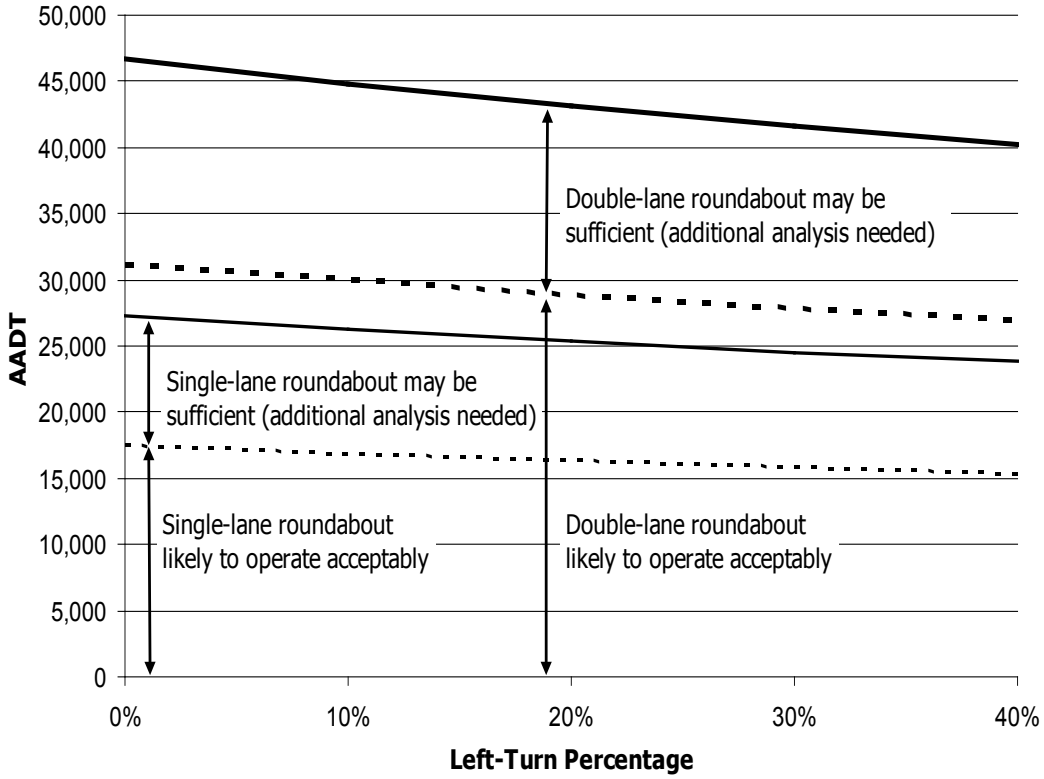

If the volumes fall within the ranges identified in Figure 3.4 where "additional analysis is needed," a single-lane or two-lane roundabout may still function quite well, but a closer look at the actual turning-movement volumes during the design hour is required. The procedure for such analysis is presented in the *HCM,* Chapter 21.

To help analyze the feasibility of using a roundabout at a particular location, PennDOT has developed a Roundabout Key Considerations Checklist, which can be found in Chapter 3, Appendix A.

1. Economic Evaluation. An economic evaluation should be performed when considering various types of intersection control. At a minimum, cost estimates should include construction costs, engineering and design fees, land acquisition, and maintenance costs over the anticipated life of the control form. Benefits may include reduced crash rates and severity, as well as reduced delay, stops, fuel consumption, and emissions. NCHRP Report 672, Section 3.8 provides a cost-benefit methodology for comparing intersection alternatives.

2. Public Involvement. Public acceptance of roundabouts has often been found to be one of the biggest challenges facing agencies planning the first roundabout in an area. Without the benefit of explanation or first-hand experience and observation, the public is likely to incorrectly associate roundabouts with older style traffic circles or rotaries. Also, the public will often have a natural hesitation or resistance to changes in their driving behavior and driving environment. Refer to Publication 295, *Project Level Public Involvement Handbook*.

PennDOT has produced brochures aimed at providing information to a variety of audiences. These educational brochures are available as separate publications (Publication 578, *Single-Lane Roundabout - General Information and Driving Tips for Motorists*; Publication 579, *Single-Lane Roundabout - General Information for Bicyclists and Pedestrians*; and Publication 580, *Multi-Lane Roundabout - General Information and*

Driving Tips for Motorists). Two of the brochures provide information on how to navigate a roundabout, one for a single-lane and the other for a multilane roundabout. The third brochure deals with similar topics, but as they relate to single-lane roundabouts from the perspective of pedestrians and bicyclists. For additional information regarding public education and outreach, please refer to NCHRP Report 672, Section 3.8.

C. Operations. The *HCM* incorporates the roundabout operational analysis model developed in NCHRP Report 572, *Roundabouts in the United States* and allows for the evaluation of existing or planned single-lane and multilane roundabouts (with up to two circulating lanes). In cases where the existing or planned roundabout has more than two circulating lanes, FHWA approved deterministic software (such as SIDRA Intersection, Arcady or RODEL) or simulation (such as VISSIM or PARAMICS) is needed to evaluate the roundabout operations. Whenever deterministic software is utilized to evaluate a roundabout, the user shall ensure that it is calibrated to local driver behavior and effective geometry, and adjustments should be made to account for lane configurations or system effects.

Figure 3.5 displays situations in which the various roundabout analysis tools are appropriate.

Figure 3.5: Selection of Analysis Tool

Application	Typical Outcome Desired	Input Data Available	Potential Analysis Tool
Planning-level sizing	Number of lanes	Traffic volumes	NCHRP Report 672, Chapter 3, *HCM*, deterministic software
Preliminary design of roundabouts with up to two lanes	Detailed lane configuration	Traffic volumes, geometry	*HCM*, deterministic software
Preliminary design of roundabouts with three lanes and/or with short lanes/flared designs	Detailed lane configuration	Traffic volumes, geometry	Deterministic software
Analysis of pedestrian treatments	Vehicular delay, vehicular queuing, pedestrian delay	Vehicular traffic and pedestrian volumes, crosswalk design	*HCM*, deterministic software, simulation
System analysis	Travel time, delays and queues between intersections	Traffic volumes, geometry	*HCM*, simulation
Public involvement	Animation of no-build conditions and proposed alternatives	Traffic volumes, geometry	Simulation

For planning purposes, a volume-to-capacity (v/c) ratio of 0.85 or less is targeted for each approach leg. However, higher v/c ratios may be acceptable for future conditions depending upon the corresponding delay and queue prediction. When the *HCM* methodology predicts a v/c ratio greater than 0.85, but less than 0.95, other deterministic software methodologies or simulation should be utilized to verify the roundabout will operate acceptably. If the projected result produces a v/c ratio greater than 0.95, other alternatives, such as revised lane configurations or different intersection control types should be evaluated.

Consistent with the *HCM*, level of service (LOS) thresholds for roundabouts have been established using control delay, and are the same as defined for stop-controlled intersections.

D. Safety. Roundabouts are a proven safety measure due to their minimal conflict points and speed control. In particular, roundabouts can provide the most safety benefits when used at intersections with historically high crash rates, roads with historical problem of excessive speeds, and at intersections with more than four legs or with difficult skew angles. In order to achieve the full safety benefits of a roundabout, a principle-based design process including the proper application of performance checks should be utilized. The subsequent section discusses the principles of roundabout design.

Further information pertaining to roundabout safety is found in NCHRP Report 672, Chapter 5.

E. Design. Roundabout design follows a principles based design process. This process is focused on achieving and balancing several key objectives. Figure 3.6 displays the basic geometric elements of a roundabout.

Figure 3.6: Basic Geometric Elements of a Roundabout

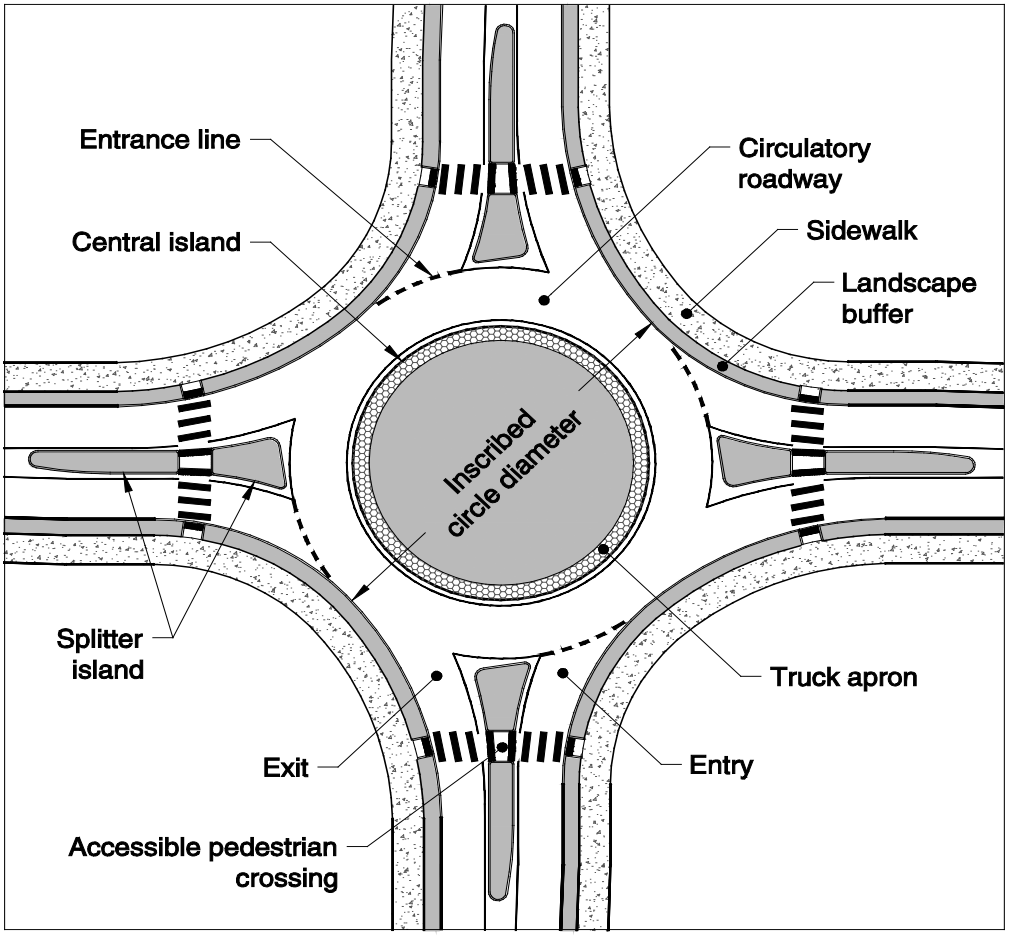

The principles and objectives of the geometric design of roundabouts are achieved using the general design process shown in Figure 3.7. In particular, performance checks are an important element of the design process and guidance found in the NCHRP Report 672, Section 6.7 should be followed to ensure the performance checks are completed appropriately, including sight distances.

Figure 3.7: General Roundabout Design Process *

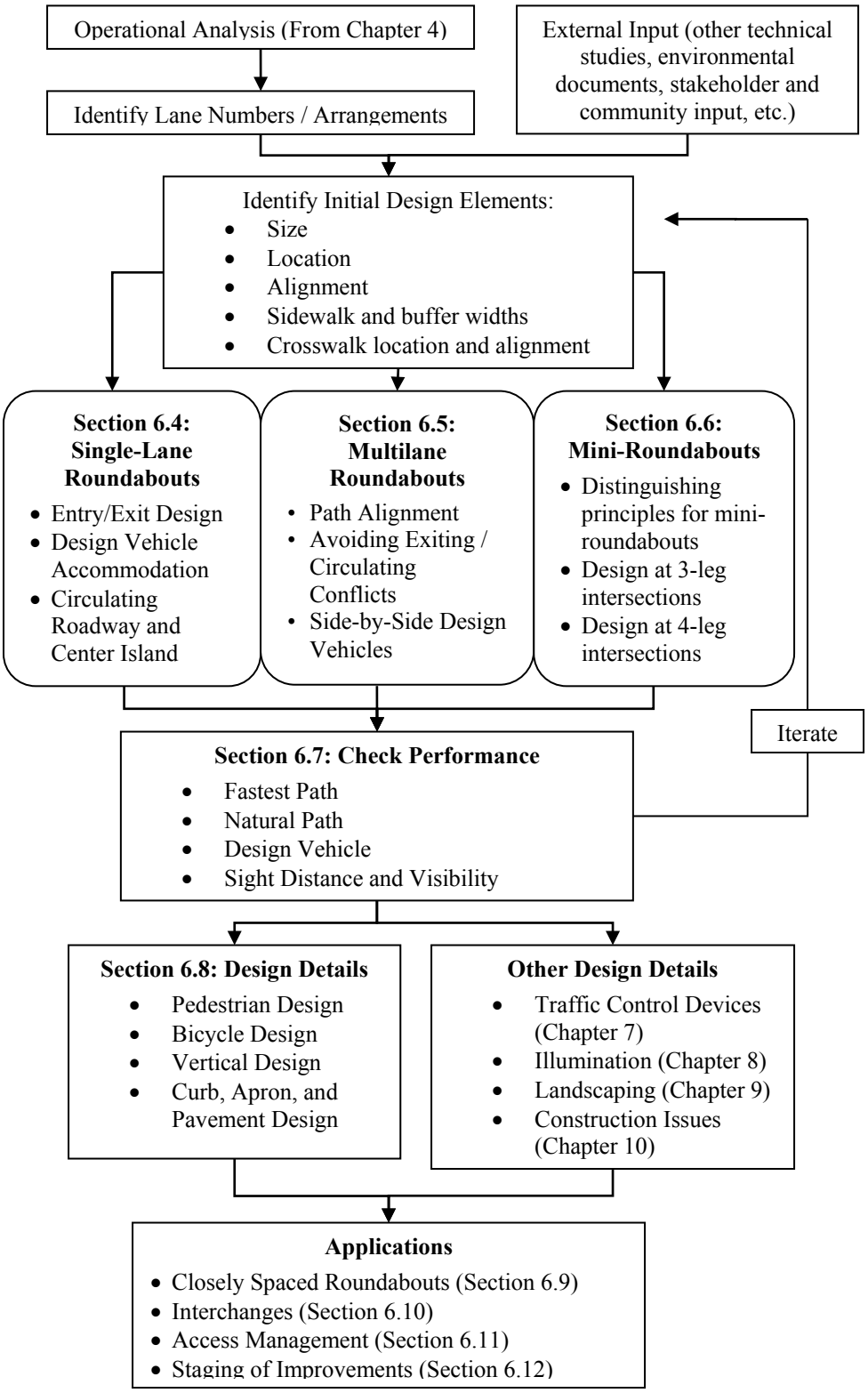

* Chapter and Section references are from NCHRP Report 672.

Roundabout projects should be classified as Moderately Complex or Major Projects. Therefore, Design Field View submissions are required for review and approval by the Bureau of Project Delivery. The need for a Final Design Office Meeting will be made on a project by project basis by the Bureau of Project Delivery or the FHWA as applicable.

Since modern roundabouts are somewhat new to Pennsylvania and much of its design community, the use of a Peer Review is highly recommended, especially for roundabouts being designed in-house or by design consultants with limited roundabout design experience.

1. Design Vehicle. The recommended design vehicle is an AASHTO WB-67 for roundabouts on state routes and interchange ramp terminals. The roundabout geometry should accommodate the swept path of the design vehicle tires and body and should be evaluated using a CAD-based vehicle turning path program for each of the turning movements. The use of other design vehicles will be made on site specific considerations, usually related to truck restrictions.

2. Splitter Islands. Splitter islands should be incorporated into all roundabouts, and generally at least 50 ft in length, although specific situations or design constraints may necessitate shorter splitter islands. Splitter islands should be a minimum of 6 ft wide at crosswalk locations to adequately provide refuge for pedestrians, including those using wheelchairs, pushing a stroller, or walking a bicycle. Splitter islands also alert approaching drivers to the geometry of the roundabout. For higher speed approaches, splitter island lengths of 150 ft or more are often beneficial. A more detailed discussion of splitter island geometry for high-speed approaches can be found in NCHRP Report 672, Section 6.8.5.3. See NCHRP Report 672, Sections 6.4.1 and 6.5.5 for more information regarding general design details for splitter islands.

3. Pedestrian Design Considerations. Pedestrians should generally be considered and accommodated at all roundabout intersections. Pedestrian accommodations typically include cut-throughs on splitter islands, two-stage perpendicular crossings, curb ramps and accessibility features such as detectable warning surfaces. In some situations (such as rural intersections), pedestrian accommodations may not be necessary; however, it is recommended that such splitter islands be designed to be wide enough to accommodate potential future crossings. Current Draft Public Right-of-Way Accessibility Guidelines (PROWAG) require pedestrian-activated signals at all multilane roundabout entries and exits as well as detectable edging where pedestrian crossings are not intended. Further information for the design of pedestrian accommodations for roundabouts is provided in NCHRP Report 672, Section 6.8.1. Also, refer to Chapter 6 for ADA compliance.

4. Bicycle Design Considerations. Where bicycle lanes are used on approach roadways, they should be terminated in advance of roundabouts using tapers to merge cyclists into traffic for circulation with other vehicles. For bike routes where cyclists remain within the traffic lane, it can be assumed that cyclists will continue through the roundabout in the travel lane. At multilane roundabouts consider providing bicycle ramps to allow bicyclists to exit the roadway onto the sidewalk and travel as pedestrians. Ramps should not normally be used at urban, single-lane roundabouts except where the complexity of the roundabout would make circulating like other vehicles more challenging for bicyclists. Further information for the design of bicycle accommodations for roundabouts is provided in NCHRP Report 672, Section 6.8.2.

5. High Speed Approaches. The primary safety concern in rural locations where approach speeds are high is to make drivers aware of the roundabout with sufficient advance distance to comfortably decelerate to the appropriate speed for entering the roundabout. Where possible, the geometric alignment of approach roadways should be constructed to maximize the visibility of the central island and the shape of the roundabout. Further information on treatments for high speed approaches is provided in NCHRP Report 672, Section 6.8.5 and 7.4.4.

6. Drainage. Drainage structures should normally be placed on the outer curb line of the roundabout and upstream of crosswalks, but should not be placed in the entry and exit radii of the approaches. Drainage structures located on the outer curb line of the circulatory roadway shall be designed to withstand vehicle loading. Maximum gutter spreads should match the requirements for the approach roadways. Refer to NCHRP Report 672, Section 6.8.7 and Chapter 13 for a discussion of vertical alignment considerations which includes drainage.

7. Curbing. Concrete curb, as specified in Publication 72M, *Roadway Construction Standards*, should be used along the outside edge of all roundabouts which includes the entry radius, the circulatory roadway, and the exit radius, and for the splitter islands. For rural roadways it is desirable to extend outside curbing along approaches to the length of the required deceleration distance to the roundabout. A truck apron curb should be used between the truck apron and the circulatory roadway. Further information on the principles of using curbs on roundabouts is provided in NCHRP Report 672, Sections 6.8.7.4 and 6.8.8.1.

8. Pavement. Asphalt or dark colored concrete is the recommended material for the circulatory roadway to differentiate it from the concrete truck apron. At locations where a single-lane roundabout is constructed with the intention of later conversion to a multilane roundabout, asphalt pavement should be considered due to the need to redo the concrete jointing during conversion. Sidewalks should be constructed with a different texture and/or color than the truck apron to differentiate the pedestrian path and to deter pedestrians from using the truck apron. Further information on the design of pavements for roundabouts is provided in NCHRP Report 672, Section 6.8.8.

9. Staging of Improvements. When projected traffic volumes indicate that a multilane roundabout is required for the design year, the duration of time that a single-lane roundabout can be expected to operate acceptably should be estimated. Consideration should be given to first constructing a single-lane where a single-lane roundabout is expected to be sufficient for ten years or more from the date the roundabout would open to traffic.

To allow for this future expansion, the right-of-way and geometric needs of both the single-lane and multilane roundabout should be acquired. For further information refer to NCHRP Report 672, Section 6.12.

10. Traffic Control Devices. Traffic control devices for roundabouts shall be in accordance with the *MUTCD* and Publication 236, *Handbook of Approved Signs*. NCHRP Report 672, Chapter 7 provides a helpful presentation of the application of traffic control devices to roundabouts.

11. Illumination. Lighting of roundabouts serves two main purposes:

a. It provides visibility from a distance for users approaching the roundabout; and

b. It provides visibility of the key conflict areas to improve users' perception of the layout and visibility of other users within the roundabout.

For additional guidance and details regarding lighting layouts, illuminance levels, and other considerations, please refer to NCHRP Report 672, Chapter 8.

F. Other Considerations.

1. Landscaping. A realistic maintenance program should be considered in the design of landscape features, including identification of the responsible party for future maintenance, water supply, drainage, and expected growth of plantings. Maintenance Agreements with the Municipality should be setup as early as possibly during project development.

Landscaping must not reduce sight distances below minimum criteria. For a more detailed discussion of landscaping design consideration and best practices, please refer to NCHRP Report 672, Chapter 9.

2. Construction and Maintenance. Roundabouts can be constructed under three types of traffic conditions:

- With all traffic diverted away from the work area,
- With some traffic diverted, or
- Under full traffic.

The guiding principle is to minimize staging and provide large sections of the project to construct during each construction stage. This will increase quality of construction, reduce driver confusion, and reduce construction duration and cost. Generally, diverting or detouring as much traffic from the intersection as possible is the most desirable option. For a more detailed discussion of construction staging under all three types of conditions, please refer to NCHRP Report 672, Section 10.3.

3. Snow Removal. For a discussion of snow removal considerations and best practices, please refer to NCHRP Report 672, Section 10.7.2.

INTENTIONALLY BLANK

CHAPTER 3, APPENDIX A

ROUNDABOUT KEY CONSIDERATIONS CHECKLIST

County: _____
SR & Section: _____
Intersection: _____
Reviewer: _____
Date: _____

1. Location Description
   - Highway Classification & Typology, Design Speed, AADT, Left Turn %, etc. More than four legs?

   Cross Street 1:

   Cross Street 2:

   Fifth Leg:

2. Site Characteristics/Context
   - Describe the surrounding environment. Describe general area conditions, setting, topography, railroads, historic district, etc. Is this a new intersection?

3. Project Objective
   - What are the operational and safety issues? (Capacity, traffic calming, skewed geometry, etc.) Document any crash history or clusters.

4. Roundabout Sizing
    - Refer to NCHRP Report 672, Exhibit 3-12 or Publication 13M, Design Manual, Part 2, *Highway Design*, Chapter 3, Figure 3.4). Refer to the *HCM*, Chapter 21 should a more detailed capacity analysis be required.

5. Design Vehicle
    - Consider the anticipated truck volumes. What is the appropriate design vehicle? How will emergency vehicles navigate the roundabout? Do oversized loads need to be accommodated? Is there a need to accommodate trucks side-by-side (if multilane roundabout is anticipated)?

6. Right of Way & Utilities
    - Is adequate right-of-way available at the intersection location? Document potential ROW impacts. What utility conflicts exist?

7. Pedestrian & Bicycle Usage
    - Document anticipated pedestrian/bicycle volumes.

8. Alternative Intersection Control
    - Two-Way Stop Control (TWSC)? All-Way Stop Control (AWSC)? Signal?

9. Public Involvement
    - What type of public involvement should be considered? Is this the first roundabout in the area?

CHAPTER 4

GRADE SEPARATIONS AND INTERCHANGES

4.0 INTRODUCTION

The ability to accommodate high volumes of traffic safely and efficiently through intersections depends largely on the arrangements provided for handling intersecting traffic. The greatest efficiency, safety, and capacity are attained when the intersecting traveled ways are grade separated. By definition, a grade separation represents a crossing of two highways (or a highway and a railroad) at different levels while an interchange represents a system of interconnecting roadways, in conjunction with one or more grade separations, to provide for the movement of traffic between two or more roadways on different levels.

For Interstate highways, interchanges shall be provided between all intersecting Interstate routes, between other selected access controlled highways and at other selected public highways to facilitate distribution of traffic. Each interchange shall provide for all traffic movements.

The type and design of grade separations and interchanges are influenced by many factors such as highway classification, character and composition of traffic, design speed and degree of access control. These controls plus signing needs, economics, terrain and right-of-way are of great importance in designing facilities with adequate capacity to accommodate traffic demands. Although each interchange presents an individual problem, its design shall be considered in conjunction with adjacent interchanges or grade separations on the project as a whole to provide uniformity and route continuity to avoid confusion in driver expectancy.

The design elements, capacity analysis and traffic control concepts presented in this Chapter apply to grade separations and interchanges and their appurtenant features. Additional sources of information and criteria to supplement the concepts presented in this Chapter are contained in the 2011 AASHTO Green Book, Chapter 10 and the MUTCD.

4.1 TYPES OF INTERCHANGES

Interchanges vary in type from single ramps connecting local streets to complex and comprehensive design layouts involving two or more highways. The basic interchange configurations are indicated in the 2011 AASHTO Green Book, Chapter 10, Figure 10-1. Their application at a particular location is reflected by surrounding topography and culture, the degree of flexibility in the traffic operations desired and the practical aspects of costs. Any one configuration can vary extensively in shape and scope since numerous combinations of interchange types can evolve through the assembly of one or more of the basic types.

For additional information concerning the types of interchanges and their application at a particular site, refer to the 2011 AASHTO Green Book, Chapter 10, Section 10.1, "Introduction and General Types of Interchanges".

4.2 WARRANTS FOR GRADE SEPARATIONS AND INTERCHANGES

The justification of an interchange at a given location is difficult due to the wide variety of site conditions, traffic volume, highway types and interchange layouts. Six warrants should be considered when determining if an interchange is justified at a particular site: (1) design designation; (2) reduction of bottlenecks or spot congestion; (3) reduction of crash frequency and severity; (4) site topography; (5) road-user benefits; and (6) traffic volumes. For more information concerning these six warrants, refer to the 2011 AASHTO Green Book, Chapter 10, Section 10.2, "Warrants for Interchanges and Grade Separations".

Not all warrants for grade separations are included in the warrants for interchanges. For these additional warrants for grade separations, refer to the 2011 AASHTO Green Book, Chapter 10, Section 10.2, "Warrants for Interchanges and Grade Separations".

4.3 ADAPTABILITY OF HIGHWAY GRADE SEPARATIONS AND INTERCHANGES

Intersections are comprised of three general types: intersections, highway grade separations without ramps, and interchanges. Each type has a practical range of situations but the limits of that range are not sharply defined. Therefore, there is considerable overlapping and the final selection usually represents a compromise after joint consideration of design traffic volume and pattern, cost, topography, and availability of right-of-way. Each type is based on the following considerations: (1) traffic and operation; (2) site conditions; (3) type of highway and intersecting facility; (4) access separations and control on the crossroad; (5) safety; (6) stage development; and (7) economic factors.

For additional presentations on the above considerations, refer to the 2011 AASHTO Green Book, Chapter 10, Section 10.3, "Adaptability of Highway Grade Separations and Interchanges"; Section 10.4, "Access Separations and Control on the Crossroad at Interchanges"; Section 10.5, "Safety"; Section 10.6, "Stage Development"; and Section 10.7, "Economic Factors".

4.4 GRADE SEPARATION STRUCTURES

The 2011 AASHTO Green Book, Chapter 10, Section 10.8, "Grade Separation Structures", discusses various types of structures that are employed to separate the grades of two intersecting roadways or a highway and a railroad. Although many phases of structural design should also be considered, AASHTO's discussion is confined to the geometric features of grade separation structures. The discussion focuses on the following topics:

A. Types of Separation Structures. There are three general types of grade separation structures: through, partial through and deck type. Every effort should be made to design a grade separation structure that fits the environment in a pleasing and functional manner without drawing unnecessary or distracting attention.

B. Overpass Versus Underpass Roadways. A detailed study should be made at each proposed highway grade separation site to determine whether the major roadway should be carried over or under the crossroad. The issues governing whether a road should be carried over or under usually fall into one of three general groups:

1. The influence of topography predominates and the design should be closely fitted to it.

2. The topography does not favor any one arrangement.

3. The alignment and gradeline controls of one highway predominate and the design should accommodate that highway's alignment instead of the site topography.

Where topography does not govern, as in the case of flat topography, the 2011 AASHTO Green Book, Chapter 10, Section 10.8.3, "Overpass versus Underpass Roadways", identifies additional secondary factors and general guidelines that should be examined.

When determining the appropriate width of the roadway over or under a grade separation; in determining the dimensions, location, and design of the structure as a whole; and in detailing features adjacent to the road, the designer should aim to provide a facility on which driver reaction and vehicle placement will be essentially the same as elsewhere on the intersecting roads. However, the width should not be so great as to result in the high cost of structure without proportionate value in usefulness or crash reduction.

C. Underpass Roadways. For each underpass, the type of structure used should be determined by the dimensional, load, foundation and general site needs for that particular location. It is desirable that the entire roadway cross section, including the median, traveled way, shoulders and clear roadside areas, be carried through the structure without change.

Sound barrier walls shall be located as far away as possible from the edge of traveled way while still providing the maximum benefit for insertion loss. Positive protection is required as per Publication 218M, *Standards for Bridge Design*, for sound barrier walls located within the clear zone. When a sound barrier wall protected by a concrete barrier is constructed along a highway or when a concrete barrier alone is constructed along a highway, the barrier

shall be located no closer than the outer edge of shoulder and preferably should be located 2 ft beyond the outer edge of shoulder.

Positive protection shall be provided when substructure units, retaining walls, or sound barrier walls must be placed within the clear zone width identified in Chapter 12, Table 12.1.

For the vertical clearance requirements of all structures, refer to Chapter 2, Section 2.20.

D. Overpass Roadways. The roadway dimensional design of an overpass or other bridge should be the same as that of the basic roadway in cross section dimensions unless the cost becomes prohibitive. The use of bridge railings, lateral clearances and median treatment should be as specified in Publication 15M, Design Manual, Part 4, *Structures,* and Publication 218M, *Standards for Bridge Design*.

E. Longitudinal Distance to Attain Grade Separation. The longitudinal distance needed for adequate design of a grade separation depends on the design speed, the roadway gradient and the amount of rise or fall needed to achieve the separation. To determine whether or not a grade separation is practical for given conditions, the 2011 AASHTO Green Book, Chapter 10, Figure 10-8 should be used as a guide for preliminary design to determine horizontal distance in flat terrain. The figure also may serve as a general guide in other than flat terrain and adjustments can be made in the length of the terminal vertical curves.

F. Grade Separations Without Ramps. There are many situations where grade separations are constructed without the provision of ramps. In other situations, despite sufficient traffic demand, ramps may be omitted: (1) to avoid having interchanges so close to each other that signing and operation would be difficult, (2) to eliminate interference with large highway traffic volumes and (3) to increase mobility and reduce crashes by concentrating turning traffic where it is practical to provide adequate ramp systems.

For additional guidelines and criteria for the procedures, considerations and geometric design features for grade separation structures, refer to the 2011 AASHTO Green Book, Chapter 10, Section 10.8.7, "Grade Separations without Ramps".

4.5 INTERCHANGES

The basic types of interchanges can be classified in general terms to include: (1) three-leg designs, (2) four-leg designs and (3) other special interchange designs involving two or more structures. The type of configuration used at a particular site is determined by the number of intersection legs, expected volumes of through and turning movements, type of truck traffic, topography, culture, design controls, proper signing and the designer's initiative.

Signing and operations are major considerations in the design of the interchanges. The signing of each design should be tested to determine if it can provide for effective flow of traffic. The need to simplify interchange design from the standpoint of signing and driver understanding cannot be overstated.

Three-leg designs represent an interchange with three intersecting legs consisting of one or more highway grade separations and one-way roadways for all traffic movements. When two of the three intersection legs form a through road and the angle of intersection is not acute, the interchange is classified as a T interchange. When all three intersection legs have a through character or the intersection angle with the third intersection leg is small, the interchange is classified as a Y interchange. The 2011 AASHTO Green Book, Chapter 10, Figures 10-9 and 10-10 illustrate various patterns of three-leg interchanges.

Four-leg designs represent interchanges with four intersection legs which may be grouped under six general configurations:

1. Ramps in one quadrant.
2. Diamond interchanges.
3. Single-point urban interchanges (SPUIs).
4. Partial cloverleafs.
5. Full cloverleafs.
6. Directional interchanges.

The 2011 AASHTO Green Book, Chapter 10, Section 10.9.3, "Four-Leg Designs", provides additional discussion about the operational characteristics and adaptations of each configuration. The 2011 AASHTO Green Book, Chapter 10, Figures 10-15 through 10-38 present actual examples of existing or planned interchanges for each configuration.

Additional interchange configurations may include special interchange arrangements that would include an offset interchange or a combination of two or more of the previously discussed interchanges. An offset interchange may be applicable where there are major buildings or other developments near the crossing of the freeways. The need for a combination interchange design may be predicated on an analysis that requires the accommodation of one or two turning movements that have high volumes with respect to the other turning movements.

For overpass lengths exceeding 80 ft, consider providing supplemental lighting during daylight hours beneath the underpass structures. This consideration should include design and construction costs, as well as long-term energy and maintenance requirements.

The following concepts should be used to govern the general design considerations for interchanges:

A. Determination of Interchange Configuration. For detailed discussion, refer to the 2011 AASHTO Green Book, Chapter 10, Section 10.9.5, "General Design Considerations", "Determination of Interchange Configuration".

B. Approaches to the Structure. For detailed discussion, refer to the 2011 AASHTO Green Book, Chapter 10, Section 10.9.5, "General Design Considerations", "Approaches to the Structure".

C. Interchange Spacing. Since interchange spacing has a pronounced effect on freeway operations, proper spacing can be difficult to attain due to traffic demand for frequent access. As a rule, the 2005 AASHTO publication, *A Policy on Design Standards - Interstate System*, notes that minimum spacing should be 1 mi in urban areas and 3 mi in rural areas. In urban areas, spacing of less than 1 mi may be developed by grade-separated ramps or by collector-distributor roads.

D. Uniformity of Interchange Patterns. For detailed discussion, refer to the 2011 AASHTO Green Book, Chapter 10, Section 10.9.5, "General Design Considerations", "Uniformity of Interchange Patterns".

E. Route Continuity. For detailed discussion, refer to the 2011 AASHTO Green Book, Chapter 10, Section 10.9.5, "General Design Considerations", "Route Continuity".

F. Overlapping Routes. For detailed discussion, refer to the 2011 AASHTO Green Book, Chapter 10, Section 10.9.5, "General Design Considerations", "Overlapping Routes".

G. Signing and Marking. Signing and marking are important elements of driver communication at interchanges and should conform to the sources of reference listed in Chapter 2, Section 2.18.A. For additional information, refer to the 2011 AASHTO Green Book, Chapter 10, Section 10.9.5, "General Design Considerations", "Signing and Marking".

H. Basic Number of Lanes. For detailed discussion, refer to the 2011 AASHTO Green Book, Chapter 10, Section 10.9.5, "General Design Considerations", "Basic Number of Lanes".

I. Coordination of Lane Balance and Basic Number of Lanes. For detailed discussion, refer to the 2011 AASHTO Green Book, Chapter 10, Section 10.9.5, "General Design Considerations", "Coordination of Lane Balance and Basic Number of Lanes".

J. Auxiliary Lanes. For detailed discussion, refer to the 2011 AASHTO Green Book, Chapter 10, Section 10.9.5, "General Design Considerations", "Auxiliary Lanes".

K. Lane Reductions. For detailed discussion, refer to the 2011 AASHTO Green Book, Chapter 10, Section 10.9.5, "General Design Considerations", "Lane Reductions".

L. Collector-Distributor Roads. For detailed discussion, refer to the 2011 AASHTO Green Book, Chapter 10, Section 10.9.5, "General Design Considerations", "Collector-Distributor Roads".

M. Two-Exit Versus Single-Exit Interchange Design. For detailed discussion, refer to the 2011 AASHTO Green Book, Chapter 10, Section 10.9.5, "General Design Considerations", "Two-Exit versus Single-Exit Interchange Design".

N. Wrong-Way Entry. Signing in these areas should be in accordance with the sources of reference listed in Chapter 2, Section 2.18.A. For additional discussion, refer to the 2011 AASHTO Green Book, Chapter 10, Section 10.9.5, "General Design Considerations", "Wrong-Way Entry".

O. Other Interchange Design Features. Additional design considerations for interchanges involve the following features:

1. Testing for Ease of Operation.
2. Pedestrian and Bicycle Accommodation.
3. Ramp Metering.
4. Grading and Landscape Development.
5. Models.

For more information concerning these additional design considerations, design concepts and features for interchanges, refer to the 2011 AASHTO Green Book, Chapter 10, Section 10.9.7, "Other Interchange Design Features".

4.6 WEAVING SECTIONS

Weaving sections represent highway segments where the patterns of traffic merging or diverging at contiguous points of access result in vehicle streams or paths that cross each other in the same direction. These weaving sections may occur within an interchange, between entrance ramps followed by exit ramps of successive interchanges and on segments of overlapping roadways.

For additional information, refer to the 2011 AASHTO Green Book, Chapter 10, Section 10.9.5, "General Design Considerations", "Weaving Sections". For the capacity analysis of weaving sections, refer to the *HCM*.

4.7 RAMPS

A. Types and Examples. A ramp represents various types, arrangements and sizes of turning roadways that connect two or more legs at an interchange. The 2011 AASHTO Green Book, Chapter 10, Figure 10-58 illustrates several types of ramps and their characteristic shapes, each of which can be used to create numerous shape variations for an interchange. For additional information, refer to the 2011 AASHTO Green Book, Chapter 10, Section 10.9.6, "Ramps", "Types and Examples".

B. General Ramp Design Considerations. The 2011 AASHTO Green Book, Chapter 10, Section 10.9.6, "Ramps", "General Ramp Design Considerations", describes the following items to be considered:

1. Design Speed. Refer to the 2011 AASHTO Green Book, Chapter 10, Table 10-1 for guide values for ramp design speed as related to highway design speed.

2. Portion of Ramp to Which Design Speed is Applicable.

3. Ramps for Right Turns.

4. Loops.

5. Semidirect Connections.

6. Direct Connections.

7. Different Design Speeds on Intersecting Highways.

8. At-Grade Terminals.

9. Curvature. The design guidelines for turning roadways at interchanges apply directly to the design of ramp curves for various design speeds and are discussed in Chapter 2, Section 2.6.

10. Sight Distance. Decision sight distance, as discussed in Chapter 2, Section 2.17.E, is desired where feasible. For ranges in design values for stopping sight distance on horizontal and vertical curves for turning roadways and open road conditions, refer to Chapter 2.

11. Grade and Profile Design.

12. Vertical Curves. For additional information on design values and turning roadway conditions for vertical curvature, refer to Chapter 2, Section 2.12.

13. Superelevation and Cross Slope. For additional information on superelevation and cross slope, refer to Chapter 2, Section 2.13.

14. Gores.

C. Ramp Traveled-Way Widths. Refer to Publication 13, Design Manual Part 2, *Contextual Roadway Design*, Chapter 3, New Construction and Reconstruction – Change In Road Type.

D. Ramp Terminal Design. The terminal of a ramp is that portion adjacent to the through traveled way, including acceleration and deceleration (speed-change) lanes, tapers and islands. Ramp terminals may be the at-grade type, as at the crossroad terminal of a diamond or partial cloverleaf interchange, or the free-flow type where ramp traffic merges with or diverges from high-speed through traffic at flat angles.

Terminals are classified according to the number of lanes on the ramp at the terminal, as either single or multilane, and according to the configuration of the acceleration and deceleration (speed-change) lane, as either a taper or parallel type.

The 2011 AASHTO Green Book, Chapter 10, Section 10.9.6, "Ramps", "Ramp Terminals" provides additional information about the following topics:

1. Ramp Terminals.

a. Left-side Entrances and Exits.

b. Terminal Location and Sight Distance.

c. Ramp Terminal Design.

d. Traffic Control. Refer to Section 4.7.E when traffic signal controls are required at ramp terminals on the minor roadways containing sufficient volumes of through and turning movements.

e. Distance Between a Free-Flow Terminal and Structure. The terminal of a ramp should not be located near the grade separation structure but placed in advance of the structure using sight distances comparable to the guidelines established for decision sight distance in Chapter 2, Section 2.17.E.

f. Distance Between Successive Ramp Terminals. The values should be checked with the procedures outlined in the HCM especially where weaving considerations may govern (See Section 4.6).

g. Auxiliary Lanes. For additional discussions concerning the factors to consider for the design of auxiliary lanes, refer to Chapter 1, Section 1.6 and the 2011 AASHTO Green Book, Chapter 9, Section 9.7, "Auxiliary Lanes".

2. Single-Lane Free-Flow Terminals (Entrances). For the design of acceleration lanes on all Department projects, refer to the 2011 AASHTO Green Book, Chapter 10, Section 10.9.6, "Ramps", "Single-Lane Free-Flow Terminals, Entrances". The minimum lengths required for acceleration lanes are governed by the highway design speed and ramp design speed. The minimum lengths required are presented in the 2011 AASHTO Green Book, Chapter 10, Section 10.9.6, "Ramps", "Single-Lane Free-Flow Terminals, Entrances".

3. Single-Lane Free-Flow Terminals (Exits). For the design of deceleration lanes on all Department projects, refer to the 2011 AASHTO Green Book, Chapter 10, Section 10.9.6, "Ramps", "Single-Lane Free-Flow Terminals, Exits". The minimum lengths required for deceleration lanes are governed by the highway design speed and the ramp design speed. The minimum lengths required are presented in the 2011 AASHTO Green Book, Chapter 10, Section 10.9.6, "Ramps", "Single-Lane Free-Flow Terminals, Exits".

4. Free-Flow Terminals on Curves. The discussions in 2 and 3 above for acceleration and deceleration lanes are stated in terms of tangent through-lane alignment. Because curvature on most freeways is slight, there is usually no need to make any appreciable adjustments at ramp terminals on curves. However, where curves on a freeway are relatively sharp and there are exits and entrances located on these curves, adjustments in design may be desirable to avoid operational difficulties. The guidelines and methods of design to follow for exit and entrance terminals on curves are presented in the 2011 AASHTO Green Book, Chapter 10, Section 10.9.6, "Ramps", "Single-Lane Free-Flow Terminals, Exits".

5. Multilane Free-Flow Terminals. Multilane terminals may be appropriate where traffic is too great for single-lane operation. Other considerations that may call for multilane terminals are through-route continuity, queuing on long ramps, lane balance and design flexibility. The most common multilane terminals consist of two-lane entrances and two-lane exits, two-lane terminals on curved alignment and major forks and branch connections as discussed below:

a. Two-Lane Entrances. Two-lane entrances or two-lane acceleration lanes are warranted for two situations either as branch connections or because of capacity needs for the on-ramp. When using two-lane entrances, to satisfy lane-balance needs, at least one additional lane shall be provided downstream. The design of two-lane entrances on all Department projects shall use the taper type as presented in the 2011 AASHTO Green Book, Chapter 10, Figure 10-73.

b. Two-Lane Exits. Two-lane exits or two-lane deceleration lanes may be provided where the traffic volume leaving the freeway at an exit terminal exceeds the design capacity of a single lane. To satisfy lane balance needs and not to reduce the basic number of through lanes, it usually is necessary to add an auxiliary lane upstream from the exit.

The design of two-lane exits on all Department projects shall use the parallel-type as presented in the 2011 AASHTO Green Book, Chapter 10, Figure 10-74. Refer to Section 4.5.M for additional guidelines for two-exit versus single-exit design.

c. Two-Lane Terminals on Curved Alignment. The design of ramp terminals where the freeway is on curved alignment is discussed in 4 above for single-lane terminals. The same principles of design may be used in the layout of two-lane terminals.

d. Major Forks and Branch Connections. A major fork is defined as the bifurcation of a directional roadway, of a terminating freeway route into two directional multilane ramps that connect to another freeway or of a freeway route into two separate freeway routes of about equal importance. A branch connection is defined as the beginning of a directional roadway of a freeway formed by the convergence of two directional multilane ramps from another freeway or by the convergence of two freeway routes to form a single freeway route. For additional information concerning those two types of multilane free-flow terminals, refer to the 2011 AASHTO Green Book, Chapter 10, Section 10.9.6, "Ramps", "Single-Lane Free-Flow Terminals, Exits".

E. Ramp Capacity Analysis and Traffic Control. The capacity and service volume determination procedures for ramp analysis on all Department projects shall adhere to the concepts presented in the *HCM*. Where traffic signal controls may be required at ramp terminals, their installation shall be governed by Publication 149, *Traffic Signal Design Handbook*.

F. Ramp Design Sheet. In order to facilitate the preparation and checking of ramp designs and to avoid an oversight of the items that shall be considered, a Ramp Design Sheet (see Table 4.1) may be used to identify these items, to indicate the source of design criteria and to indicate the proposed design.

Where the proposed design does not comply with the identified design criteria, an explanation shall be submitted at the time of request for interchange approval.

INTENTIONALLY BLANK

TABLE 4.1
RAMP DESIGN SHEET

SR_____ **DATE**_____
RAMP_____ **MADE BY**_____
CHECKED BY_____

ITEMS	SOURCE OF DESIGN CRITERIA AASHTO REFERENCE	REMARKS
(1) Design Speed of Highway		
(2) Ramp Design Speed*		
(3) Minimum Radius		
(4) Compound Curve Ratio*		
(5) Length of Circular Arc for Compound Curves Radius _____ Radius _____ Radius _____ Radius _____		
(6) Ramp Gradient		
(7) Superelevation Rates* Radius _____ Radius _____ Radius _____ Radius _____		
(8) Rate of Cross Slope Change		
(9) Maximum Algebraic Difference in Cross Slope at Terminals*		
(10) Design Width of Pavement Case Traffic Condition (Include Any Modifications) R _____ R _____ R _____ R _____		
(11) Internal Clearances (a) Post or Rails (b) Shoulder Right (c) Shoulder Left		

*Comments pertaining to specific items on the Ramp Design Sheet above are as follows:

(2) Desirable ramp design speeds should approximate the low volume running speed on the intersecting highways. Where it is not practical to maintain desirable ramp speeds, considerations should be given to provide acceleration and deceleration lanes at the intersected road to minimize the relative speed differential between the ramp and the intersected road.

(4) The ratio of the flatter radius to the sharper radius should not exceed 2 if practical; otherwise, spiral transitions should be utilized between the two curves.

(7) Superelevation rates should not exceed 8.0% in rural areas and 6.0% in urban areas.

(9) The maximum algebraic difference in cross slope at ramp terminals should be determined at the ramp nose.

During the design development, considerations should be given to the striping and the auxiliary lanes that may be required for safe operations even though total traffic volumes may not indicate their need.

TABLE 4.1 (CONTINUED)
RAMP DESIGN SHEET

ITEMS	SOURCE OF DESIGN CRITERIA AASHTO REFERENCE	REMARKS
(11) Internal Clearances (Cont'd) (d) Extent of Stabilization-Lt (e) Extent of Stabilization-Rt (f) Structures - Underpass (g) Structures - Overpass (h) Curbs - From Parapets (j) Curbs - From Traffic Lane (k) Other Clearances _____ _____ _____ _____		
(12) Deceleration Lane Length (a) 2% or Less (b) Greater than 2% (c) Taper Length		
(13) Acceleration Lane Length (a) 2% or Less (b) Greater than 2% (c) Taper Length		
(14) Sight Distance* (a) Ramp Proper (b) Terminals		
(15) Other Items _____ _____ _____ _____		

*Comments pertaining to specific items on the Ramp Design Sheet above are as follows:

14. Sight distance requirements for the ramp proper shall be determined similar to alignment and profile stopping sight distance for the main line and sight distance at the termini shall be determined in accordance with requirements for sight distance at intersections (See Chapter 2, Section 2.17).

During the design development, considerations should be given to the striping and the auxiliary lanes that may be required for safe operations even though total traffic volumes may not indicate their need.

CHAPTER 5

LIGHTING

5.0 INTRODUCTION

The design criteria in this Chapter are not intended to be a textbook. The information herein is written for qualified lighting engineers and to assist them in preparing a uniform and standard lighting design of highway lighting systems.

The criteria included in this Chapter apply to Freeway Interchanges, non-limited access state routes, all lighting proposed for locations within the state right-of-way (ROW) and all local lighting projects with Department oversight. Roadway areas not covered in this Chapter should be based on the criteria listed in the AASHTO *Roadway Lighting Design Guide* and as specified at the pre-design meeting.

The designer's engineering judgment in the application of the criteria is subject to review and concurrence by the Department's Bureau of Maintenance and Operations - Maintenance Technical Leadership Division (BOMO-MTLD). It is suggested that the designer obtain prior approval from BOMO-MTLD on matters of design which raise questions in the application of these criteria to a specific condition.

Designers developing lighting specifications and calculations are expected to be knowledgeable in lighting and electrical systems design. The lighting calculation report shall be stamped by a Professional Engineer registered in the state of Pennsylvania and submitted with the Preliminary Lighting Report.

Present the design report in the format shown by the sample design reports in Section 5.11.

Sources of reference in addition to this Manual are:

- AASHTO-Current *Roadway Lighting Design Guide.*
- IES-Current *Lighting Handbook*
- AASHTO-*Standard Specifications for Structural Supports for Highway Signs, Luminaires, and Traffic Signals,* version as adopted by the Department.
- ANSI/IES-RP-8 Current *Roadway Lighting*.
- Publication 408, *Specifications,* and associated changes, Pennsylvania Department of Transportation.
- NCHRP Report 672 – *Roundabouts: An Informational Guide, Second Edition*
- Current Publication 72M, *Roadway Construction Standards*, Highway Lighting Drawings, RC-80M, RC-81M, RC-82M, RC-83M and RC-84M.
- Current Publication 219M, *Standards for Bridge Construction*, BC-721M and BC-722M.
- Current Publication 111M, *Traffic Control – Pavement Markings and Signing Standards TC-8600 and TC-8700 Series,* TC-8715.
- Publication 10, Design Manual, Part 1, *Transportation Program Development and Project Delivery Process.*
- Publication 10C, Design Manual, Part 1C, *Transportation Engineering Procedures.*
- Publication 10X, Design Manual, Part 1X, *Appendices to Design Manuals 1, 1A, 1B, and 1C.*

- Publication 14M, Design Manual, Part 3, *Plans Presentation.*
- Publication 15M, Design Manual, Part 4, *Structures*.

5.1 SITE INSPECTION

Designers shall familiarize themselves with existing overhead and underground facilities which may interfere with lighting facilities. Coordinate the locations of existing and proposed facilities (such as underground drains, guide rail, utility structures, utility appurtenances and overhead signs) prior to the start of lighting system design.

To avoid conflict with any proposed utility facility relocations and to obtain, at an early date, an available source of electrical service, the lighting designer is to proceed as follows:

1. Invite the District Utility Relocation Supervisor to attend the scheduled field meeting with the lighting designer and the utility to review the preliminary design requirements for sign or highway lighting, and to determine the available source of energy and the best location for the proposed service terminal. Electrical service characteristics for sign and highway lighting typically are single phase, 3 wire at either 120/240 V or 240/480 V.

2. Prepare and forward a summary of the field review meeting to the utility with a request for confirming in writing the location of the proposed service terminal and the location of the available source of energy.

3. Furnish a copy of the letter of confirmation received from the utility to the District Utility Relocation Unit for current investigation of any conflict with interim relocation plans being furnished.

4. Have any conflicts observed by the District Utility Relocation Unit brought to the attention of the lighting designer and the utility for further investigation and coordination of any necessary adjustments.

Existing lighting facilities to be removed, relocated or coordinated with are part of the total scope of work of the proposed lighting system under design.

Include facilities other than lighting facilities which are to be moved or relocated in the scope of work for the roadway construction or alterations.

Discuss lighting source preferences and proposed mounting heights with the party responsible for maintenance of the lighting systems. These preferences are subject to acceptance by the District and BOMO-MTLD. All designs must comply with the requirements of Publication 13M, Design Manual, Part 2, *Highway Design*, Chapter 5.

5.2 PRE-DESIGN MEETING

Prepare an overview of the proposed lighting for the project. When any of the following items are available, include project locations, site plan (in PDF format), lighting warrants, proposed design criteria, existing luminaire locations and parameters (including equipment within the work area and immediately adjacent to the work area), proposed lighting locations and parameters, electrical utility provider and potential power source location(s).

Coordinate with the District Project Manager (PM) to contact BOMO-MTLD to schedule the mandatory Pre-Design meeting. The purpose of this meeting is to review requirements and establish design parameters including the following:

1. Purpose of lighting, limits of work, funding source(s).
2. Current design manuals, standards and criteria.
3. Luminaire and pole selections.
4. Mounting heights.
5. Light Loss Factor (LLF) to be applied to photometric calculations.
6. Minimum average maintained illumination at End of Rated Life (ERL).
7. Maximum uniformity ratio (average/minimum).

8. Maximum veiling luminance (glare) ratio.
9. Coordination of proposed lighting with adjacent roadways.

Prepare and distribute (electronically) the Pre-Design Meeting minutes within one week of the meeting for review and concurrence by all parties.

5.3 PRELIMINARY DESIGN

A. Overview. Preliminary design entails selecting the most efficient and effective lighting source, luminaire locations, spacing, mounting heights and overhangs to meet the design criteria. The purpose is to establish the luminaire locations early in the lighting design process. Final lighting design considerations such as foundation type, circuiting and installation details should be completed after the Preliminary Design submission has been approved by BOMO-MTLD and the District. Preliminary design may not be required for projects deemed to be of minor or moderate complexity, to be determined during the pre-design meeting.

B. Definitions:

1. ERL - End of Rated Life. The projected time (in hours of operation) when the lighting system as designed is expected to no longer meet minimum illumination standards and must be serviced or replaced. For all projects except enhancement projects, use 60,000 hours. For enhancement projects, contact BOMO-MTLD.

2. LDD - Luminaire Dirt Depreciation. The correction factor used in the photometric calculations to account for the accumulation of airborne particulate matter on the luminaire optical surface between cleaning cycles. For projects with typical maintenance cycles, use 0.8. All other proposed values require the approval of BOMO-MTLD.

3. LLD - Lamp Lumen Depreciation. The correction factor used in the photometric calculations to account for the decrease in the total lumen output of the lighting source from initial installation to the ERL. For High Pressure Sodium (HPS), the LLD is 0.8. For LED on non-enhancement projects, use manufacturer's data for LLD at 60,000 hours. Consult BOMO-MTLD for other applications.

4. LLF - Light Loss Factor. The correction factor entered into the lighting calculation software which is the product of the LDD times the LLD and is subject to the approval of BOMO-MTLD.

5. L_v - Veiling Luminance. A measure of disability glare determined by using lighting calculation software. The L_v ratio is the maximum value of Veiling Luminance (L_v max) divided by the Average Pavement Luminance (Lavg).

6. UR - Uniformity Ratio. The ratio of the average maintained horizontal illuminance to the minimum horizontal illuminance at the ERL.

7. Traveled Way Width. Overall width of roadway including all lanes of travel, extending from outer edge of the outermost lane on one side of the roadway to the outer edge of the outermost lane on the opposite side. For bridges where the distance from edge of lane to wall or barrier is less than 10 ft, traveled way width is wall-to-wall or barrier-to-barrier.

C. General Requirements. (For additional information on the design of high-mast lighting, underpass lighting, tunnel lighting, roundabout lighting, safety rest areas, welcome centers and permanent truck weigh stations, see Sections 5.5 through 5.8.)

1. Target Light Level. Design lighting systems in accordance with the current AASHTO Roadway Lighting Design Guide to meet target light level requirements at ERL. Use full cutoff optics for cobrahead luminaires. Final design criteria to be confirmed during the Pre-Design Meeting.

2. Luminaire Type. Provide either HPS or LED luminaires. Base selection on owner preference as well as life cycle cost analysis. Provide a remote monitoring and control module for each luminaire.

3. Pole Locations. Determine pole locations using lighting calculation software. There are many readily available programs that compute either area or roadway analysis. Use the actual roadway geometry taken off of the plans. Enter initial luminaire lumens and the appropriate LLF into the program. Grid spacing in software calculations is to be determined as follows:

a. ANSI/IES RP-8 requirements (or RP-8 default settings in software) with calculation points extended to the boundaries as defined by 'Traveled Way Width' above;

b. 3 ft grid spacing for intersections with calculation points extended to cover the conflict areas as defined by ANSI/IES RP-8; or

c. 3 ft grid spacing for exit and entrance ramps, single lane roadways, crosswalks, curved roadway sections and roundabouts.

Calculation summary must show average illuminance, minimum illuminance, average to minimum uniformity ratio, and veiling luminance ratio. Base designs on photopic illuminance; mesopic and scoptic factors will not be accepted. Illuminance grid is to be calculated at roadway surface. Include an off-axis grid extending 10 ft beyond the above analysis areas, except for bridges where distance from edge of pavement to wall or barrier is less than 10 ft. Illumination values in this off-axis grid may not decrease more than 50% of target light levels for the analysis area above.

4. Illumination Level. Illumination levels greater than recommended by AASHTO criteria, or the level on which the design is based, are justified under the following conditions:

a. To obtain acceptable uniformity ratio.
b. Pole spacing is the result of fixed or control points on the roadway (such as bridge pier locations).
c. Full spacing is not available at specific locations because of control or fixed points.

5. Overhang. Base the overhang of the luminaire from edge of pavement, either positive or negative, upon the following considerations: (Note: positive overhang indicates that the luminaire is extended into the roadway.)

a. System efficiency.
b. Driver comfort.
c. Pole setback and arm length required. (Only standard arm lengths are to be specified.)
d. Illumination level and uniformity.
e. Future maintenance.

6. Mounting Height. The mounting height is the height of the optical center of the luminaire above the road surface at the edge of pavement. Pole shaft lengths for conventional poles must necessarily vary to compensate for the difference in elevations between the pole foundation or anchorage and the roadway surface. Publication 72M, *Roadway Construction Standards*, gives this adjustment to the pole shaft length by the C-dimension.

7. Luminaires. Design conventional cobrahead roadway luminaires at nominal mounting heights of 30 ft to 50 ft. Determine the best wattages, distribution types, and mounting heights for specific roadways based on the design criteria.

8. Pole Location Restrictions. Know what restrictions are upon light pole locations when designing a highway lighting system. The restrictions are based upon vehicular safety, driver comfort, ease of maintenance, protection of facilities and aesthetic considerations and are as follows:

a. Locate poles on driver's right, whenever possible.

b. Locate poles on the inside of curves when required for safety. Do not place guide rail solely for light pole protection.

c. Use pole arm lengths not exceeding 30 ft.

d. Do not locate poles in the median strip, splitter islands or the central island of roundabouts except under special conditions and with specific approval from BOMO-MTLD.

e. Locate poles at exit ramp gores on interchanges at 150 ft minimum from the actual shoulder nose. This minimum distance may be reduced to avoid an obstruction or to meet other clearance requirements but in no case shall be less than 140 ft.

f. Locate poles at entrance ramp gores on interchanges at 100 ft minimum from the actual shoulder nose. This minimum distance may be reduced to avoid an obstruction or to meet other clearance requirements but in no case shall be less than 90 ft.

g. Provide minimum pole clearance from overhead sign structures and bridges as follows: (The minimum pole clearances from overhead sign structures and bridges may be reduced by no more than 10 ft to avoid an obstruction or to meet other clearance requirements.)

MOUNTING HEIGHT (MH) FOR POLE	MINIMUM POLE CLEARANCE FROM OVERHEAD SIGN STRUCTURES AND BRIDGES
30 ft	50 ft
35 ft	60 ft
40 ft	70 ft
45 ft	80 ft
50 ft	90 ft

h. Locate poles on the high barrier of bridges when the superelevation is greater than 6.0%.

i. Set back all unprotected or exposed poles as far as possible from the roadway, consistent with available approved equipment.

j. Do not place poles in front of guide rail.

k. Do not locate poles less than 15 ft from the edge of pavement and 5 ft from the edge of paved shoulder, except when the poles are placed behind barrier, guide rail, walls or other approved protection.

m. Locate poles on bridges on the side least likely to be disturbed if there are plans to widen the bridge in the future. Locate poles at pier locations if feasible.

n. Provide poles on bridges with arms not exceeding 8 ft. Provide bridge mounted poles with vibration dampers.

D. Preliminary Design Report and Plans. Prepare the preliminary design report for proposed lighting by including the following, and submitting all files electronically to the District PM:

1. Design criteria as established by the Pre-Design Meeting.

2. Type, wattage, IES distribution, mounting height (above the pavement) and overhang (from edge of pavement or curb) for each proposed luminaire.

3. The LDD, LLD, and the total LLF as calculated for each proposed luminaire.

a. For HPS luminaires, the LDD is 0.8 and the LLD is 0.8 for a total LLF of 0.64.

b. For Metal Halide (MH) luminaires, consult BOMO-MTLD.

c. For LED luminaires, provide documentation for each proposed manufacturer's product for the calculation of the LLD, based on LM-80 approved methods and extrapolations of results to ERL based on TM-21. Use LLD based on definition in 5.4.B. Use 0.8 for the LDD or provide test documentation to support a different value for the LDD.

4. Complete photometric calculations and tabulation of results, as shown in Section 5.11, for each different road width and situation.

- **a.** Average maintained illuminance at ERL.
- **b.** UR
- **c.** Minimum illuminance.
- **d.** Veiling luminance ratio (if required).
- **e.** Other calculations as discussed at the Pre-Design Meeting.

5. Copy of the Pre-Design Meeting minutes.

6. Design ADT of roadway.

7. Electronic copies of the files from an accredited Testing Laboratory.

8. Copies of proprietary and Bulletin 15 waiver requests (if applicable).

9. Copy of the energy and maintenance agreement with the local government.

10. Product data sheets for all proposed luminaires.

11. Other information as required from the Pre-Design meeting.

Prepare the preliminary design plans for proposed lighting by including the following and submitting all files electronically in PDF format to the District PM:

1. All information developed in the design shown on a 1" = 50' or 1" = 100' standard size drawing as prescribed in Publication 10C, Design Manual, Part 1C, *Transportation Engineering Procedures*, Chapter 4, Section 4.4.C.

2. Guide rail, type, location and distance from edge of lane and/or shoulder (also include for final review).

3. Names of municipalities and boundary lines of political subdivisions.

4. Light pole locations by stations.

5. High mast pole foundation ground elevations.

6. Bridge and underpass lighting provisions.

7. Legend of symbols used, scale of plans and date.

8. Right-of-way lines.

9. Shoulder and curb lines.

10. Location and parameters of existing lights. Specify whether each location is existing to remain, relocated, or removed.

11. Overhead and underground electrical utilities (for locating power supplies and avoiding conflicts).

12. Locations of existing to remain and proposed new trees.

5.4 FINAL DESIGN REQUIREMENTS

Final design entails the development of information needed to prepare the lighting construction plans and special provisions (if required), based upon the Preliminary design previously approved by BOMO-MTLD and the District.

A. Breakaway or Yielding Feature. Where poles are considered to be exposed to traffic, design them to have a suitable breakaway or yielding feature. For the breakaway or yielding feature, comply with all applicable AASHTO requirements for structural supports. Poles provided with breakaway or yielding features are described as Type S Poles available with arm lengths up to and including 20 ft*. In general, locate Type S poles on a 6:1 slope or flatter. Use Modified Foundations when the slope is steeper than 6:1 and flatter than or equal to 4:1.

*Maximum arm length is 12 ft for Type S steel poles with 50 ft or greater mounting height (including "C" dimension).

B. Pole Placement & Setback (in Relation to Guide Rail & Barrier). Do not place poles in front of guide rail or barriers. Locate pole to provide a minimum unobstructed/deflection distance behind the guide rail as per Chapter 12.4, Roadside Barriers.

C. Pole Foundations. Install pole foundations as shown in Publication 72M, *Roadway Construction Standards*. Pole base foundation designs which are not PennDOT standard Type FC and Type FC Modified must be reviewed by the District Bridge Unit. Submit documentation of District Bridge Unit review with the Final Lighting Submission.

D. Minimum Arm Lengths (for Poles). Determine minimum arm lengths for poles by the following formula:

Arm Length = Setback - 2 ft + Overhang. Use only standard arm lengths. Overhang resulting from actual setback can vary ± 2 ft from overhang used in the design.

E. Pole Types. Specify lighting poles as follows:

1. Allow the use of either galvanized steel poles or aluminum poles.

2. Specify aluminum poles only or galvanized steel poles only when justified and approved for the project.

3. Specify galvanized steel poles with single member arms and aluminum poles with truss arms. (Bracket type unless approved otherwise).

4. Specify pole arm rise compatible for each length specified. Refer to Publication 72M, *Roadway Construction Standards*.

5. Specify poles and arms compatible with adjacent existing installations.

6. Provide anchor base, Type A Poles, when:

- **a.** Pole is mounted on a bridge barrier or wall.
- **b.** Pole is located behind guide rail.
- **c.** Pole is considered protected by natural roadside considerations.

7. Anchor base, Type A Poles may be considered at the discretion of BOMO-MTLD, when:

- **a.** Poles are located in very low speed (≤ 25 mph) urban or urban core areas.
- **b.** Poles are located in urban core areas with high pedestrian activity.

F. Conduit and Cable:

1. Base wire size calculations upon 3% voltage drop maximum for reactor type ballasts and 5% voltage drop maximum for auto-regulator or regulator-type ballasts.

2. Minimum direct burial conduit size is 2 in. Minimum underground cable size is AWG #8.

G. Power Supply. Specify the power supply as follows:

1. The electric utility company typically delivers 3 wire, single phase 120/240 V service or a 240/480 V service to the Department service pole as indicated in Publication 72M, *Roadway Construction Standards*. Provide a service location, service disconnect equipment and the meter installation acceptable to the local electric utility company.

2. Design the sizes of equipment to meet the needs of each project. Simplified diagrams are shown in Publication 72M, *Roadway Construction Standards*. Size breakers to 75% of rating. Size lighting loads to include sign loads when signs are to be energized from the roadway lighting circuits.

3. A step up transformer may be required on larger systems that use a 120/240 V supply. Provide transformers where they can be justified in wire size savings and submit analysis with final lighting submission.

4. Specify a metered service for all projects except where a Department approved unmetered energy only rate is available. Supply voltage shall be either 120/240 V or 240/480 V, single phase, 3-wire system. Other voltages require specific approval from BOMO-MTLD.

H. Multiple Distribution System. Use and install direct burial cable in PVC conduit as shown in Publication 72M, *Roadway Construction Standards*. Balance the luminaires alternately on each side of the 3-wire, single phase distribution system connected line to neutral. Protect each side or phase leg of the distribution system with a breaker (with identifiable handle tie where necessary) of suitable size but not less than 20 A. Provide an interchange with as many circuits as are needed to obtain economical wire sizes within limits of voltage drop and number of power supplies available. If overhead lighted signs are also involved, specify wire sizes and protective devices of sufficient size to provide for the sign loads as well as for the highway lighting loads.

5.5 HIGH MAST LIGHTING

A. Candela (Candlepower) and Illuminance Data. At the time of the Pre-Design meeting, the Department will furnish the consultant with the required candela (candlepower) and illuminance data necessary to accomplish the lighting design when using HPS luminaires. Do not consider light at angles greater than 75°.

B. Luminaire Type. Use either 400 W HPS luminaires with symmetrical (Type V) light distributions or LED luminaires, quantities of luminaires on each pole as necessary to achieve the proper illuminance level and uniformity ratio. Mount on high mast poles at approved nominal mounting heights of 60 ft, 80 ft, 100 ft, or 120 ft above the road surface. Do not exceed a pole length of 120 ft.

C. "Run-out" Lighting. If "run-out" lighting is required, use arm-mount luminaires on conventional poles.

D. Design Procedures. Determine the average maintained illuminance level on the roadway in the following manner:

1. Locate points at 15 ft intervals on the roadway, two (2) transverse points per lane in each direction, each ramp, and the crossroad.

2. Determine the end of rated life (ERL) maintained horizontal illuminance level at each of these points, considering the usable contribution from all poles in the vicinity of each point.

3. Calculate the illuminance level at each point by a computerized program.

4. Divide the interchange area into sections of the mainline in each direction, each ramp, and the crossroad.

5. Determine the average maintained illuminance level in each section by a computerized program.

6. Determine the uniformity ratio of each road section by a computerized program. Tabulate all design results as shown in Section 5.11.

7. Pole Locations. Locate poles on tangent sections and on the inside of curves a minimum of 50 ft from the edge of pavement wherever practical. Locate poles on the outside of curves either a minimum of 50 ft from the edge of pavement or as determined by the required clear zone width criteria in Chapter 12 (use highest value). Shield poles that are located closer than 50 ft from the edge of pavement by placement either behind guide rail or on natural earth mounds.

8. Pole Types. Construct poles in accordance with Publication 408, *Specifications*, and Publication 72M, *Roadway Construction Standards*.

5.6 UNDERPASS LIGHTING

Base design of underpass lighting on the AASHTO *Roadway Lighting Design Guide* and ANSI/IES *RP-22-11 Tunnel Lighting* documents. Supplemental lighting may be needed when the pole mounted luminaires do not sufficiently penetrate the underpass. Daytime and nighttime lighting may be needed when pedestrian safety is involved. Contact BOMO-MTLD for proper design parameters for underpass lighting.

5.7 TUNNEL LIGHTING

Tunnels may need daytime and/or nighttime lighting. Base design of tunnel lighting on the AASHTO *Roadway Lighting Design Guide*, ANSI/IES *RP-22-11 Tunnel Lighting*, or on the Illuminating Engineering Society (IES) of North America Publication, *IES Lighting Handbook*. Contact BOMO-MTLD for proper design parameters on each tunnel lighting project.

5.8 SAFETY REST AREAS, WELCOME CENTERS AND PERMANENT TRUCK WEIGH STATIONS

Light the ramps leading in, around and out of these areas to 0.6 average maintained footcandle and a maximum uniformity ratio of 4:1.

Light the car parking lot area to 1.0 average maintained footcandle and the truck parking lot area to 0.8 average maintained footcandle with a maximum uniformity ratio of 4:1.

Light the sidewalks leading from the parking lot to and around the safety rest building with post-top mounted luminaires at a mounting height of 15 ft, placed approximately 3 ft to 5 ft from the edge of the sidewalk. Light the sidewalks to 0.8 average maintained footcandle with a maximum uniformity ratio of 4:1. The use of high mast lighting poles may delete the need for post-top mounted luminaires. Consider contribution from nearby parking lot lighting when analyzing illumination levels on sidewalks.

5.9 ROUNDABOUTS

Roundabouts generally require lighting to allow drivers, bicyclists, and pedestrians to enter, circulate around, and exit in a reasonably safe and efficient manner. The following guidance has been developed to design lighting based on several factors including AADT and vehicle speeds rather than applying the one-size-fits-all guidance provided in ANSI/IES *RP-8 Roadway Lighting* and NCHRP *Report 672 – Roundabouts: An Informational Guide, Second Edition.*

A. Provision of Lighting. The purpose of roundabout lighting is twofold: to make the roundabout visible from a distance, and to make key conflict areas more visible. Motor vehicles have headlights and taillights to improve their visibility at night. However, more vulnerable road users, such as pedestrians and bicyclists, may not have lights or be as visible, and unexpected fixed objects or animals may be in the travel lanes. Even for motor vehicles, headlight effectiveness is reduced at roundabouts due to their geometry; a driver while circulating typically needs to look farther to the left than can be covered by their headlights. Therefore, lighting is generally recommended at roundabouts.

Roundabout lighting is required if it meets one or more of the following factors based on the design year:

- The roundabout is part of an interchange that has full or partial lighting;
- Any of the intersecting roads has an AADT exceeding 1,500 vehicles per day;
- Nighttime pedestrian activity exceeds 10 pedestrians per hour during the highest average annual nighttime hour;
- One or more of the legs of the roundabout has or is expected to have lighting;
- The roundabout is in an urban or urban core environment.

If one or more of the above warranting factors are met, but lighting will not be provided due to the municipality not agreeing to pay for maintenance and/or energizing the lighting or for any other reason, an exception to the lighting policy must be approved in accordance with Publication 10C, Design Manual Part 1C, *Transportation Engineering Procedures*, Chapter 4.9.H, Roadway Lighting.

Lighting is also recommended for roundabouts not meeting any of the above factors. If lighting is not provided, the use of retroreflective signs and pavement markings to identify fixed object hazards is required, including delineation of the central island, nose of splitter islands, and beginning of any curb sections.

When lighting is provided, the amount of lighting at the roundabout depends on several factors, and transition lighting on the legs may not be necessary in all cases. The subsequent sections provide more guidance on these factors. Note that some municipalities (e.g., Philadelphia) have their own lighting standards, and they are to be coordinated with in determining appropriate lighting levels.

For the purposes of this policy, the roundabout is defined as the circulating roadway plus the distance down each leg measured along the centerline of the roadway to a minimum of 20 ft beyond the outside edge of the pedestrian crossing or to a minimum of 50 ft from the edge of the circulating roadway, whichever is farther. If there is no pedestrian crossing on a leg, the 50 ft minimum is applicable. The applicable distances down each leg may need to be longer than the minimum due to various factors, such as approach geometry. This length should be coordinated with BOMO-MTLD.

B. Roundabouts on Streets with Continuous Lighting. If two or more of the intersecting roadways have continuous lighting, one of the following two tables should be used. If the roundabout is paved with asphalt (excluding the truck apron), Table 5.1 should be used to determine the appropriate illuminance level for the roundabout. If the roundabout is paved with Portland cement concrete, Table 5.2 should be used to determine the appropriate illuminance level for the roundabout. If an approach has a higher lighting level than recommended by IES for that type of facility, the roundabout illuminance level should be equal to the sum of the intersecting roadways.

TABLE 5.1
RECOMMENDED PAVEMENT ILLUMINANCE CRITERIA FOR ROUNDABOUTS WITH ASPHALT PAVEMENT

MAJOR STREET AADT	MINOR STREET AADT	PEDESTRIAN ACTIVITY LEVEL DURING HIGHEST AVERAGE ANNUAL NIGHTTIME HOUR			UNIFORMITY RATIO E_{avg}/E_{min}
		>100 p/h	10-100 p/h	<10 p/h	
>3,500	>3,500	3.2 fc	2.4 fc	1.7 fc	3.0
>3,500	1,500-3,500	2.7 fc	2.0 fc	1.4 fc	3.0
>3,500	<1,500	2.4 fc	1.9 fc	1.2 fc	3.0
1,500-3,500	1,500-3,500	2.2 fc	1.7 fc	1.1 fc	4.0
1,500-3,500	<1,500	2.0 fc	1.5 fc	0.9 fc	4.0
<1,500	<1,500	1.7 fc	1.3 fc	0.7 fc	6.0

Source: Adapted from IES RP-8-18 (Table 12-4, Section 12.1.2, and Section 12.1.3)

TABLE 5.2
RECOMMENDED PAVEMENT ILLUMINANCE CRITERIA FOR ROUNDABOUTS WITH CONCRETE PAVEMENT

MAJOR STREET AADT	MINOR STREET AADT	PEDESTRIAN ACTIVITY LEVEL DURING HIGHEST AVERAGE ANNUAL NIGHTTIME HOUR			UNIFORMITY RATIO E_{avg}/E_{min}
		>100 p/h	10-100 p/h	<10 p/h	
>3,500	>3,500	2.2 fc	1.7 fc	1.1 fc	3.0
>3,500	1,500-3,500	1.9 fc	1.4 fc	0.9 fc	3.0
>3,500	<1,500	1.5 fc	1.3 fc	0.8 fc	3.0
1,500-3,500	1,500-3,500	1.5 fc	1.1 fc	0.7 fc	4.0
1,500-3,500	<1,500	1.3 fc	1.0 fc	0.7 fc	4.0
<1,500	<1,500	1.1 fc	0.9 fc	0.6 fc	6.0

Source: Adapted from IES RP-8-18 (Table 12-4, Section 12.1.2, and Section 12.1.3) and illuminance criteria for R1 roadways as published in IES 2000.

In addition to horizontal illuminance for the roundabout, vertical illuminance should be evaluated at each crosswalk. This consists of evaluating a series of points 5 ft above the crosswalk, achieving a vertical illuminance that matches the design horizontal illuminance for the roundabout. Crosswalk vertical illuminance is to be measured as viewed by drivers approaching the crosswalk (i.e., toward the roundabout on entry, away from the roundabout on exit).

C. Isolated Roundabouts (No Continuous Lighting on Any Approach). If none of the intersecting roadways has continuous lighting, Table 5.3 should be used to determine the appropriate illuminance level for the roundabout.

TABLE 5.3
PAVEMENT ILLUMINANCE CRITERIA FOR ISOLATED ROUNDABOUTS

MAJOR STREET AADT	ROAD SURFACE		UNIFORMITY RATIO E_{avg}/E_{min}
	ASPHALT	CONCRETE	
>3,500	0.8 fc	0.6 fc	3.0
1,500-3,500	0.6 fc	0.4 fc	4.0
<1,500	0.4 fc	0.3 fc	6.0

Source: Adapted from IES RP-8-18 (Table 12-2 and Section 12.1.2)

The number of luminaires needed for an isolated roundabout depends in part on the target uniformity ratio. For roundabouts on a major street with 3,500 vehicles per day or greater, the uniformity ratio of 3.0 may require luminaires in each quadrant, or four for a typical four-leg roundabout. Conversely, it may be possible to use fewer luminaires to adequately light a roundabout on a major street with less than 1,500 vehicles per day, depending on the size of the roundabout and the mounting height, lumen level, and distribution type of the selected luminaires. A case-specific design will be necessary to determine the necessary lighting configuration.

D. Transition Lighting. Roundabouts require transition lighting when a roadway transitions to no lighting from an illuminance level that exceeds the values in Table 5.3 as appropriate for the pavement type. This may happen, for example, if the roundabout was designed to fit into an existing or future continuous lighting system on one or more legs, even if the subject leg is not part of a continuous lighting system.

Lighting levels at or below those given in Table 5.3 do not require transition lighting. Note that if transition lighting is not provided on a given leg, one must take particular care to highlight the start of any curbing within the median or outside edges of the approaching roadway. This includes the use of retroreflective signs, pavement markings, and pavement markers on the top of curbs to mark the leading edge of the splitter island as well as the start of any curbing on the outside edge of the approach roadway.

For lighting levels above those given in Table 5.3, Table 5.4 is used to determine the extent of necessary transition lighting. The table identifies a series of zones that step away from the roundabout. Depending on the lighting level of the roundabout itself, the number of transition zones needed may range from zero to three. The first zone, Zone 1, represents 70% of the main intersection illuminance level; the illuminance level in each subsequent zone decreases with increased distance from the roundabout. Values in the table may be interpolated as needed or rounded up to the next highest value. In the unlikely event that the roundabout lighting levels exceed the values in the table, coordinate with the BOMO-MTLD to apply the methodology appropriately.

The length of each zone is a function of the exiting speed from the roundabout and the speed limit of the leg downstream from the roundabout. As exiting speed and speed limits increase, each of the zone lengths increases. Table 5.5 provides design values for the length of each zone based on the design exit speed from the roundabout (20 mph, 25 mph, and 30 mph) and the speed limit downstream of the roundabout (ranging from 30 mph to 55+ mph). Values in between the values in the table may either be interpolated or rounded up to the next highest value. All zones are to be measured along the centerline of the roadway. Zone 1 is to be measured starting from the outer edge of the roundabout as defined in Section 5.9.A.

TABLE 5.4
TRANSITION ZONES BASED ON ROUNDABOUT ILLUMINANCE LEVELS

ROUNDABOUT ILLUMINANCE*	TRANSITION LIGHTING NEEDED?	TRANSITION ZONE ILLUMINANCE		
		ZONE 1 (70%)	ZONE 2 (40%)	ZONE 3 (16%)
3.2 fc	Yes	2.2 fc	1.3 fc	0.5 fc
2.7 fc	Yes	1.9 fc	1.1 fc	0.5 fc
2.4 fc	Yes	1.7 fc	0.9 fc	0.4 fc
2.2 fc	Yes	1.6 fc	0.9 fc	0.4 fc
2.0 fc	Yes	1.4 fc	0.8 fc	—
1.9 fc	Yes	1.3 fc	0.7 fc	—
1.7 fc	Yes	1.2 fc	0.7 fc	—
1.5 fc	Yes	1.0 fc	0.6 fc	—
1.4 fc	Yes	1.0 fc	0.6 fc	—
1.3 fc	Yes	0.9 fc	0.6 fc	—
1.2 fc	Yes	0.8 fc	—	—
1.1 fc	Yes	0.7 fc	—	—
1.0 fc	Yes	0.7 fc	—	—
0.9 fc	Yes	0.7 fc	—	—
0.8 fc	No	—	—	—
0.7 fc	No	—	—	—
0.6 fc	No	—	—	—
0.5 fc	No	—	—	—
0.4 fc	No	—	—	—
0.3 fc	No	—	—	—

*****Includes extents as defined in Section 5.9.A.

INTENTIONALLY BLANK

TABLE 5.5
TRANSITION ZONE LENGTHS BASED ON ROUNDABOUT EXIT SPEED AND DOWNSTREAM SPEED LIMIT

DOWNSTREAM SPEED LIMIT (MPH)	TRANSITION ZONE LENGTH (ft)		
	ZONE 1 (70%)	ZONE 2 (40%)	ZONE 3 (16%)
Exit Speed = 20 mph			
30	30	90	140
35	30	100	160
40	30	100	180
45	30	100	190
50	30	100	190
55+	30	100	190
Exit Speed = 25 mph			
30	40	90	140
35	40	90	140
40	40	120	180
45	40	120	200
50	40	120	220
55+	40	120	220
Exit Speed = 30 mph			
30	50	90	140
35	50	110	160
40	50	120	180
45	50	140	200
50	50	140	230
55+	50	140	250

If required transition lighting will not be provided or will be reduced due to the municipality not agreeing to pay for maintenance and/or energizing the lighting or for any other reason, then a waiver to this lighting policy must be approved in accordance with Publication 10C, Design Manual Part 1C, *Transportation Engineering Procedures*, Chapter 4, Section 4.9.H.

E. Lighting Pole Location. Lighting poles are to be located in accordance with the AASHTO Roadway Lighting Design Guide, provided their placement does not conflict with guidance in this Design Manual or Publication 10C, Design Manual Part 1C, *Transportation Engineering Procedures*, Chapter 4, Section 4.9.H. It is highly recommended that poles be located on the outer edges of the roundabout rather than within the central island.

F. Other Lighting Aspects. All aspects of roundabout lighting not specifically covered in this section are to comply with the guidance provided elsewhere in this Chapter, as applicable.

5.10 FINAL LIGHTING SUBMISSION

Prepare and submit Final Lighting documents per Publication 13M, Design Manual, Part 2, *Highway Design* and Publication 14M, Design Manual, Part 3, *Plans Presentation*. The Final Lighting documents, after approval by BOMO-MTLD and the District, will become part of the Final Design Plans used for bidding and construction. Final Lighting documents shall be based upon the Preliminary Design previously approved by BOMO-MTLD and the District.

The Final Lighting submission consists of final drawings, special provisions (if required), voltage drop calculations, waivers (if not previously approved), and copies of the agreements with the local utility and the local government. There is no need to resubmit photometric calculations if the luminaire layout has not changed from the approved Preliminary Lighting submission.

Prepare the Final Lighting design plans for proposed lighting by including the following and submitting all files electronically in PDF format to the District PM:

1. Title Sheet (if Lighting is a supplement to the Construction Plans, provide Construction Plans Title Sheet).

2. Index Sheet (if Lighting is a supplement to the Construction Plans, provide Construction Plans Index Sheet).

3. Summary of Quantities Sheet (combined with other project items if Lighting is a supplement to the Construction Plans).

4. Tabulation of Quantities Sheet(s).

5. Detail Sheet(s).

6. Plan Sheet(s).

The following information shall be included in the Final Lighting design and submitted electronically to the District PM:

1. All information developed in the design shown on a 1" = 50' or 1" = 100' standard size drawing as prescribed in Publication 10C, Design Manual, Part 1C, *Transportation Engineering Procedures*, Chapter 4, Section 4.4.C. All other scales require pre-approval by BOMO-MTLD.

2. Voltage drop calculations for all branch circuits.

3. Shoulder and curb lines, guide rail types, locations, and distance from edge of pavement.

4. Names of municipalities and boundary lines of political subdivisions, and right-of-way lines.

5. Location by station of all luminaires (new and existing), as established by the approved Preliminary submission; high mast pole foundation ground elevations; bridge and underpass lighting provisions.

6. Lighting branch circuit routing and sizes.

7. Determination of pole arm lengths and pole setbacks.

8. Determination of the "C" dimensions for all pole locations as shown in Publication 72M, *Roadway Construction Standards*. Show this dimension to the nearest 0.1 ft alongside the setback distance on the tabulation of quantities sheet. Refer to Publication 14M, Design Manual, Part 3, *Plans Presentation*.

9. Size or rating of power supply components.

10. Determination of type of poles required: S-Base or A-Base.

11. Overhead and underground utilities. Locations of existing to remain and proposed new trees.

12. Power supply service voltage and location. Include confirmation letter from the power company as applicable.

13. Power supply diagram and wiring schematics.

14. Determination of pole foundation required as detailed in Publication 72M, *Roadway Construction Standards*. Note: non-standard foundation designs require review and approval by the Department. Submit documentation of Department approval with Final Lighting submission.

15. Necessary details of location required as detailed in Publication 72M, *Roadway Construction Standards*.

16. Standard and special notes and special provisions.

The Final Lighting submission will be reviewed by BOMO-MTLD and (if necessary) returned with comments for revision and resubmission. Resubmit the Final Lighting design documents until all comments are satisfactorily addressed and final approval is given by BOMO-MTLD and the District.

5.11 SAMPLE DESIGN REPORTS

Present the design reports for using the formats as shown on the following pages.

INTENTIONALLY BLANK

PennDOT BOMO - Maintenance and Technical Leadership Division
Highway Lighting Pre-Design Meeting Information Form

County 1 County 2 ECMS / MPMS / EPS Number

State Route Section Municipality

Short Description Federal % State % Local %

Project Type Proprietary Products?

Justification for Lighting Electric Utility

Contact the PennDOT Project Manager (PM) to schedule the mandatory Pre-Design meeting with the BOMO Maintenance and Technical Leadership Division. Email this form and the following to the PM:

- Google maps or similar link.
- Roadway plans (pdf) showing area requiring lighting.
- Existing lighting locations.

PennDOT BOMO - Maintenance and Technical Leadership Division
Preliminary Highway Lighting Report Information Form

County 1 County 2 ECMS No. District

State Route Section Interchange with SR / Municipality

Short Description Federal % State % Local %

Project Type Proprietary Products? Pre-Design Meeting Date

Important notes from Pre-Design Meeting Electric Utility

AASHTO Warrants Date Rev

Consultant Designed by: Checked by:

Email this form along with the Preliminary Report and Plans to the District Project Manager:

- Pre-Design Meeting Minutes.
- Design criteria as established by the Pre-Design Meeting.
- Type, wattage, IES distribution, mounting height (above the pavement) and overhang (from edge of pavement or curb) for each proposed luminaire.
- Light Loss Factor (LLF) as calculated for each proposed luminaire.
- Complete photometric calculations for each section to include Average maintained illuminance at end of rated life (ERL), Uniformity Ratio (UR), minimum fc and veiling luminance (glare) ratio.
- Electronic copies of the .ies files.
- Plans showing proposed and existing lighting locations.
- Energy and Maintenance letter of intent from municipality.

SAMPLE DESIGN CRITERIA
(Sheet 1 of 1)

I. DESIGN PARAMETERS (FROM PRE-DESIGN MEETING)

Average Maintained at ERL..... 0.60 fc

Luminaire Dirt Depreciation (LDD)..... 0.80

Avg./Min. Uniformity Ratio (UR)..... 4:1

Maximum Veiling Luminance (L_V) Ratio..... 0.3:1

II. LUMINAIRES

ID	Source	Mounting Ht	Arm Length	Initial Lumens	IES Distrib
Type A	400 W, HPS	45 ft	15 ft	50,000	III
Type B	250 W, HPS	45 ft	15 ft	27,500	II

Type C

|

|

Type N……..

III. PHOTO-METRIC DATA

Type A GE451006

Type B GE451005

Type C .....

|

|

Type N .....

IV. OVERHANG

SR_____Traveled way.....0 ft.....Structures.....9 ft

SR_____Traveled way.....0 ft.....Structures.....none

Ramps.....Traveled way.....Radius > 250 ft = 5 ft

Radius < 250 ft = 10 ft

Structures.....6 ft

Underpass.....Ramp.....0 ft

SR_____5 ft

TABULATION OF DESIGN COMPUTATIONS
(Sheet 1 of 1)

ROADWAY	STATION	OVER-HANG	WATTS DISTR	MOUNTING HEIGHT	SPACING	AVG MAINT FOOT-CANDLE	UNIFORMITY RATIO	GLARE RATIO	COMP SHEET
SR _____	23+10 LT	0	400 W M-SC-III	50 ft	250 ft	0.61	3.5	0.18	7
	25+60 RT	0	400 W M-SC-III	50 ft					
	28+10 LT	0	400 W M-SC-III	50 ft	250 ft	0.61	3.5	0.18	8
	30+60 RT	0	400 W M-SC-III	50 ft	240 ft	0.63	3.2	0.19	9
SR _____	48+80 RT	0	250 W M-SC-II	45 ft					
	51+30 LT	0	250 W M-SC-II	45 ft	260 ft	0.62	3.7	0.19	18
SR _____ Seg _____	16+20 LT	-5 ft	150 W M-SC-II	35 ft					
	17+70 LT	-5 ft	150 W M-SC-II	35 ft	200 ft	0.66	3.9	0.15	22
	19+70 LT	-15 ft Wallpack	150 W S-NC-IV	15 ft	150 ft	0.70	3.8	0.13	23

SAMPLE

HIGH MAST

HIGHWAY LIGHTING

DESIGN REPORT

_____ County

SR _____, Section _____

Interchange with SR _____

Pre-Design Conference _____
Date

1. Energy and maintenance letter of intent from county dated _____ included.
2. This project is to be programmed for Federal-aid.
3. Justification for this lighting is AASHTO case _____, ADT shown on plan.

Consultant _____

Designed by _____

Checked by _____

Date _____

Rev _____

DESIGN CRITERIA

1.	Nominal Mounting Height	--	100 ft
2.	Luminaires	--	400 W
3.	Photometric Data	--	Holophane Test 24400 Fixture 1138-Sym
4.	Design Values	--	Avg Maintained 0.60 footcandle Min Point 0.20 footcandle Dirt Factor 0.80 Uniformity Ratio 4:1 maximum
5.	Lamp Data	--	Initial output 50,000 lm End of Life 40,000 lm Rated Life 24,000 h

6. Luminaire Specifications (General)
   a. Max Candela angle = 60°
   b. Projected area = 3.5 ft^2
7. Basis of tabulated values:

$$\text{Initial FC} = \frac{I(\cos\theta)^3}{MH^2} \qquad I = \text{Candelas at } \theta$$

$$\text{End Life FC} = \text{Initial FC} \times \frac{\text{Lamp end of life lumens}}{\text{Test lamp lumens}} \times 0.8$$

$$= \text{Initial FC} \times \frac{40{,}000}{50{,}000} \times 0.8 \qquad \text{Dirt Factor} = 0.8$$

TABULATION OF HIGH MAST POLES

POLE ID NO.	NO. OF LUMINAIRES	ROADWAY	STATION	GROUND ELEVATION	POLE HEIGHT	SETBACK
1	8	SR 8000 SEG 10	15 + 30 RT	1083 ft	110 ft	60 ft
2	8	SR 8000 SEG 20	17 + 17 LT	1091 ft	120 ft	100 ft
3	6	SR 793 NB	279 + 84 RT	1081 ft	120 ft	63 ft
4	8	SR 793 NB	274 + 40 LT	1073 ft	110 ft	50 ft
5	7	SR 793 SB	270 + 47 RT	1099 ft	100 ft	30 ft
6	8	SR 793 SB	264 + 42 LT	1085 ft	100 ft	58 ft

SUMMARY OF ROADWAY ILLUMINATION

ROADWAY	AVERAGE ILLUMINATION	UNIFORMITY RATIO
SR 793 NB	0.763	2.54
SR 793 SB	0.729	2.80
SR 820	0.691	3.45
SR 8000 SEG 10	0.643	2.30
SR 8000	0.680	2.52
ENTIRE	0.684	3.09

TABULATION OF ROADWAY POINT ILLUMINATION

SR 8000, SEG 10

STATION	ELEVATION	TOTAL FOOTCANDLES	CONTRIBUTING SOURCES (Pole No. and Contribution)
16 + 00	1085 ft	0.424	#5-0.383 #10-0.041
15 + 00	1090 ft	0.332	#5-0.166 #10-0.166
13 + 00	1088 ft	0.497	#3-0.106 #12-0.390
12 + 00	1080 ft	0.555	#3-0.34 #12-0.508 #6-0.013

No of Points 16, Average Footcandles 6.43, Uniformity Ratio 2.30

BLANK PAGE

CHAPTER 6

PEDESTRIAN FACILITIES AND THE AMERICANS WITH DISABILITIES ACT

6.0 INTRODUCTION

Pedestrians are a part of every roadway environment and attention must be paid to their presence in urban as well as rural areas. Pedestrian access, safety and needs must be given full consideration during the planning and design of all transportation projects. The District Traffic Engineer should be consulted to see if there is a history of pedestrian crashes within the project limits or if the route has been declared an unsafe walking route for school children under Pennsylvania Department of Transportation (PennDOT) regulations.

The Americans with Disabilities Act (ADA) of 1990 is a federal civil rights statute that prohibits discrimination against people with disabilities. ADA implementing regulations for Title II prohibit discrimination in the provision of services, programs, and activities by state and local governments. Designing and constructing pedestrian facilities in the public right-of-way that are not usable by people with disabilities may constitute discrimination. Section 504 of the Rehabilitation Act of 1973 (504) includes similar prohibitions in the conduct of federally-funded programs.

Title II, Subpart A, of the ADA covers State and local government services, including the design and construction of buildings and facilities and the operation of government programs. Rulemaking authority and enforcement are the responsibility of the Department of Justice. However, the United States Department of Transportation has been designated to implement compliance procedures relating to transportation, including those for highways, streets and traffic management. The Federal Highway Administration (FHWA) Office of Civil Rights oversees the US DOT mandate in these areas.

ADA accessibility provisions apply to the entire transportation project development process including planning, design, construction and maintenance activities.

This Chapter provides the designer with the general guidance and direction to the Department's design procedures and requirements for the design of pedestrian facilities. There are a number of design facilities that should be considered in projects which will accommodate pedestrians. In special situations, some of these facilities can be used as countermeasures to reduce the potential for pedestrian accidents. These facilities include but are not limited to:

1. Sidewalks
2. Grade separations (overpasses and underpasses)
3. Refuge islands
4. Pedestrian barriers
5. Installation of pedestrian signals and pedestrian push buttons
6. Prohibition of pedestrians (on interstate highways, some intersections, or by statute or permit)
7. Widening of shoulders (in rural areas)
8. Improvements or installation of lighting
9. Installation of special signing and pavement markings
10. Prohibition of vehicle parking
11. Designation of one-way streets

The following references provide additional guidance for accessibility issues to assist in the determination of pedestrian needs and/or design of pedestrian accommodation within the highway right-of-way. The following documents were used in the development of PennDOT's standards and policies.

- Publication 10, Design Manual, Part 1, *Transportation Program Development and Project Delivery Process*, including Publication 10X, Design Manual, Part 1X, *Appendices to Design Manuals 1, 1A, 1B, and 1C*, Appendix S, Bicycle and Pedestrian Checklist
- PennDOT Training Manual, "Pennsylvania Pedestrian and Bicyclist Safety and Accommodation"
- AASHTO - "A Policy on Geometric Design of Highways and Streets" - 2011 AASHTO Green Book

- AASHTO - "Guide for the Planning, Design and Operation of Pedestrian Facilities" - 2004
- U.S. Access Board, "Draft Public Rights-of-Way Accessibility Guidelines" (PROWAG)
- U.S. Access Board, "Special Report: Accessible Public Rights-of-Way Planning and Design for Alterations"
- U.S. Department of Transportation, Federal Highway Administration, "Designing Sidewalks and Trails for Access, Part II of II, Best Practices Design Guide"
- U.S. Department of Transportation, Federal Highway Administration, "Manual on Uniform Traffic Control Devices"
- 67 PA Code § 212, Official Traffic Control Devices

6.1 DEFINITIONS

The following definitions will be used in conjunction with the criteria described in this Chapter:

1. Proposed Accessibility Guidelines for Pedestrian Facilities in the Public Right-of-Way (PROWAG) July 26, 2011
www.access-board.gov/prowac/nprm.pdf

2. ADA Compliant Pedestrian Signals. Accessible Pedestrian Signals (APS), a device that communicates information about the WALK phase in audible and vibrotactile formats.
(*MUTCD* 2009 Edition Section 4E.06)
mutcd.fhwa.dot.gov

3. Alteration Project. A change to a facility in the public right-of-way that affects or could affect pedestrian access, circulation, or use. Alterations include, but are not limited to, resurfacing, rehabilitation, reconstruction, historic restoration, or changes or rearrangement of structural parts or elements of a facility.

4. Blended Transition. A pedestrian walkway connection with a grade of 5 percent or less between the level of the walkway and the level of the roadway crosswalk.

5. Crosswalk. That part of a roadway at an intersection included within the connections of the lateral lines of the sidewalk on opposite sides of the highway, measured from the curbs or, in the absence of curbs, from the edges of the traversable roadway; and, in the absence of a sidewalk on one side of the roadway, that part of a roadway included within the extension of the lateral lines of the existing sidewalk.

Any portion of a roadway at an intersection or elsewhere distinctly indicated for pedestrian crossing by lines or other markings on the surface.

6. Cross Slope. The slope that is perpendicular to the direction of travel.

7. Curb. The edge of a roadway surface which has been raised to contain, protect or form a gutter and is usually made of concrete or cut stone.

8. Curb Ramp. A short pedestrian ramp cutting through a curb or built up to a curb from a lower level.

9. Detectable Warning Surface (DWS). A standardized truncated dome grid surface built in or applied to the pedestrian access route to warn visually impaired people of hazards. The surface is placed where pedestrians will encounter the presence of hazards in the line of travel, such as the edge of roadway and railroads, indicating that they should stop and determine the nature of the hazard before proceeding further.

10. Engineering Judgment. The evaluation of available pertinent information and the application of appropriate principles, standards, guidelines and practices as contained in this Manual and other sources, for the purpose of deciding upon the applicability, design, operation, or installation of highway related facilities. Engineering judgment will be exercised by a licensed Professional Engineer, or by an individual working under the supervision of such Engineer. Documentation of engineering judgment is not required but is desirable when determining if ADA accessibility facilities cannot be designed to the maximum extent feasible.

11. Intersection. A roadway area formed by the connection of lateral curb lines or the lateral roadway boundaries of two or more highways or streets that join each other. Alley or driveway junctions normally do not constitute an intersection.

12. Island. A defined area between traffic lanes for control of vehicular movements or for pedestrian access and refuge. It includes all end protection and approach treatments. A median located within an intersection area is also considered to be an island. See Refuge Island.

13. Landing. An approximately level [1V:50H (2.00%) maximum in longitudinal slope and cross slope] part of a pedestrian accessible route or walkway that provides a space for performing turning maneuvers, resting or accessing pushbuttons.

14. *MUTCD*. Manual on Uniform Traffic Control Devices (2009 Edition)
mutcd.fhwa.dot.gov

15. New Construction Projects. A highway new construction project is the construction of a transportation facility where none existed, in a location without existing site constraints, where it is technically feasible to fully meet the standards for accessibility.

16. Pedestrian. A person traveling on foot or using assistive devices, such as wheelchairs, for mobility.

17. Pedestrian Access Route (PAR). A continuous and unobstructed walkway within a pedestrian circulation path that provides accessibility. Pedestrian accessible routes may include parking access aisles, curb ramps, crosswalks at vehicular ways, walks, ramps, and lifts.
Draft Public Rights of Way Accessibility Guidelines (PROWAG)
www.access-board.gov/prowac/draft.htm

18. Pedestrian Facilities. A general term denoting improvements and provisions made to accommodate or encourage non-vehicular transit.

19. Pedestrian Grade Separation Facilities. An accessible pedestrian traffic separation structure either over or under the roadway elevation (grade) of the vehicular traffic lanes providing a safe pathway access across the roadway.

20. Physical Barrier. A physical obstruction (i.e. fence, planter, guide rail, etc.) which prohibits a pedestrian movement. Placement of intentional physical barrier to deter pedestrian movements must be outside the vehicular line of sight and clear zone.

21. Public Right-of-Way. Consists of everything between the highway right-of-way limits, including travel lanes, medians, refuge islands, planting strips, sidewalks and other facilities of a roadway system.

22. Ramp. Any part of a constructed pedestrian pathway with a slope greater than 1V:20H (5.00%).

23. Refuge Island. A specifically defined area (most often raised above the street level) between vehicular traffic lanes intended as a pedestrian refuge location for persons unable to cross the entire roadway width at one time.

24. Running Slope, also known as longitudinal slope. The slope that is parallel to the direction of travel.

25. Sidewalk. A portion of a roadway between curb lines or the lateral line of a roadway and the adjacent property line or easement of private property that is paved or improved and intended for use by pedestrians.

26. Shoulder. A section of a roadway system adjacent to the traveled way that may be shared by motorized vehicles, horse drawn vehicles, bicycles, and pedestrians. The shoulder facilitates drainage, supports the roadway and provides a buffer between vehicles and pedestrians.

27. Site Infeasibility. Existing physical or site constraints which prohibit the incorporation of elements, spaces or facilities that are in full and strict compliance with the minimum requirements for new construction and which are necessary to provide pedestrian access, circulation and use.

28. Technically Infeasible. A finding that alterations to an existing facility cannot fully meet the standards because of existing site conditions that would require additional work, right-of-way acquisition or impacts, not included in the original scope or limits of the alteration project. Existing site constraints such as limited right-of-way, existing utilities, existing structures, environmental/historic impacts or other site constraints may also prohibit modification or addition of elements, spaces, or facilities that are in full and strict compliance with the standards (e.g., curb ramps may be constructed with slopes greater than 1V:12H (8.33%) where space limitations prohibit the use of flatter slopes). Where full compliance is found to be technically infeasible, these curb ramps must use slopes that provide access to the maximum extent feasible.

29. Traffic Control Device. A sign, signal, pavement marking, or other device used to regulate, warn, or guide traffic that is placed on, over, or adjacent to a street, highway, pedestrian facility, or shared-use path by authority of a public agency having jurisdiction.

30. Transition Plan. The Transition Plan should identify all current physical obstacles that limit accessibility to individuals with disabilities, describe in detail the methods that will be used to make the facilities accessible, specify a schedule for taking steps necessary to achieve compliance and identify the official responsible for implementing the plan. The District Transition Plan Items list will typically not have existing curb ramps that are noncompliant or technically infeasible curb ramps listed. Missing curb ramps will not be added to the District Transition Plan Items list as they will be updated with the next alteration plan. Complaints may result in facilities being added to the District Transition Plan Items list. Rarely, curb ramps that are required as part of an alteration project cannot be completed with that project and must be added to the District Transition Plan Items list. The District Transition Plan Items list is submitted to Central Office for inclusion in the Department Transition Plan. A public entity with 50 or more employees is required to have a Transition Plan.

31. Traveled Way. The portion of the roadway for the movement of vehicles, exclusive of roadway shoulders, berms, sidewalks and parking lanes.

32. Walkway. The continuous portion of a pedestrian access route that is connected to street crossings by curb ramps or blended transitions.

6.2 ADA REQUIREMENTS, STANDARDS AND GUIDELINES

Under the ADA, the United States Access Board has developed and continues to maintain accessibility design guidelines for accessible buildings and facilities known as the 2010 ADA Standards and the Draft Public Rights-Of-Way Guidelines (PROWAG). The 2010 ADA Standards focus mainly on facilities on sites such as buildings and is not always applicable to the public right-of-way. PROWAG provides guidance for facilities located within the public right-of-way that could be affected by constraints posed by space limitations at sidewalks, roadway design practices, slope, and terrain.

The United States Access Board's guidelines become enforceable when they are adopted by the standard setting agency for the ADA. The agencies responsible for standards under the ADA are the Department of Justice (DOJ) and the United States Department of Transportation (US DOT). Both the DOJ and US DOT have accepted the 2010 ADA Standards as standards. <u>It should be noted; the standards and guidelines serve as a means to achieve and/or measure ADA compliancy but are not requirements of ADA.</u>

The requirements of ADA include:

- New construction must be accessible and usable by persons with disabilities. Technical infeasibility should not usually be a factor in its design.
- Alterations to existing facilities, within the scope or limits of a project, must provide usability to the maximum extent feasible.
- Existing facilities that have not been altered shall not deny access to persons with disabilities.

Both the 2010 ADA Standards and PROWAG provide means to meet the requirements of ADA. Facilities located outside of the public right-of-way are governed by the 2010 ADA Standards; and facilities located within the public right-of-way are governed by PROWAG. This is consistent with a February 2006 FHWA memorandum that states the PROWAG will be used as a best practice for facilities located within the public right-of-way, when the 2010 ADA Standards is silent or not applicable. The 2010 ADA Standards, PROWAG and other standards and guidelines have been incorporated into PennDOT's standards and guidelines to achieve ADA compliance.

A. New Construction Projects. All new construction projects that have pedestrian needs will incorporate appropriate pedestrian facilities to be accessible and usable by persons with disabilities. New construction projects for highways and bridges are generally built on new locations where construction space or other existing restrictions are rare. Project cost is not an acceptable reason to fail to construct or delay completing an ADA required improvement for accessibility compliance.

PennDOT's design development process will assess and ensure that accessibility requirements are addressed during the earliest stages possible to reduce or prevent potential conflicts with various planning, right-of-way, environmental, utilities, or other highway design related issues. Project scopes may also need expanded to meet pedestrian needs.

B. Alteration Projects and Removing Existing Pedestrian Access Barriers. A highway alteration project is a change to any portion of an existing facility (space, site, structure, or improvement of a pedestrian or vehicular route) located in the highway right-of-way that affects or could affect usability, access, circulation, or use of the facility. Alterations could affect the structure, grade, function and use of the roadway. Projects such as reconstruction, major rehabilitation, milling, resurfacing, widening, traffic signal installation and pedestrian signal installation all affect access, circulation or use of a facility.

As per Title II of ADA, when a facility is altered, it must be improved or upgraded to meet the latest standards. Where it is technically infeasible to meet the latest standards, access must be provided to the maximum extent possible. See Section 6.2.B.4 for additional discussion on Technically Infeasible. At a minimum, only the altered facilities are required to be improved or upgraded to current standards. It may be cost beneficial to improve unaltered facilities while construction forces are mobilized. Additional improvements may be unavoidable due to the improvement of one facility affecting the use of an adjacent facility. Coordinate with the local municipality or property owner to obtain right-of-way or temporary construction easements for altered facilities located outside of PennDOT right-of-way.

As the ADA standards or PennDOT standards change, a state-wide upgrade of all facilities is not required. Instead, it is systematically initiated by alteration projects. Meaning, if a facility was constructed to an older standard and provides access but has not been altered since construction, the facility does not need to be upgraded. For example, a curb ramp was constructed according to standards before the DWS requirement. If the curb ramp has not been altered and provides access, the curb ramp is technically compliant. Only when the curb ramp, or the pedestrian crossing, is altered must it fully meet the latest standard and in this case include the DWS. Some sidewalk alteration projects may trigger curb ramp upgrades as well.

All alteration type projects must assess pedestrian needs and must improve or upgrade altered existing facilities to the latest standards. See Section 6.6 for tools available to help assess pedestrian needs. The ADA Law, 28 CFR Part 35.151(e) - New construction or alterations provides the general direction for the placement of curb ramps: (1) Newly constructed or altered streets, roads and highways must contain curb ramps or other sloped areas at any intersection having curbs or other barriers to entry from a street level pedestrian walkway. (2) Newly constructed or altered street level pedestrian walkways must contain curb ramps or other sloped areas at intersections to streets, roads, or highways.

During alteration projects curb ramps must be installed or upgraded and must be provided at all street crossings and signalized entrances. "T" intersections may provide only one crossing of the through roadway based on pedestrian needs. Plus intersections may provide only one crossing of the through roadway in the event existing utilities, drains, severe slopes, etc…that are not in the scope of work, make providing an accessible crossing Technically Infeasible. In the rare cases where safety concerns, such as sight distance, warrant pedestrian crossing be prohibited on one or more legs of an intersection, the TE-672 should be completed, see Section 6.6. "No Pedestrian Crossing" signs are only required if crossing is prohibited.

Where existing site constraints limit the ability to fully meet the latest standards, the improvements or upgrades must be done to provide access to the maximum extent feasible within the scope or limits of the designated project. Projects altering the usability of the roadway must incorporate accessible pedestrian improvements at the same time as the alterations to the roadway are performed.

All alteration projects require the removal of the existing pedestrian access barriers, such as missing curb ramps, when they are located within the limits of work. Only in rare situations may the pedestrian access barrier remain and the location of the barrier added to the Transition Plan to be addressed at a later time. Alterations at signalized intersections must follow appropriate traffic signal policies and procedures.

1. Major Alteration Projects. Major alteration projects can affect access, circulation, or use of existing facilities within the existing right-of-way. These alterations can include 4R projects such as resurfacing, restoration, rehabilitation and reconstruction and other alterations such as major widening, bridge projects, interstate safety rest area / welcome center restorations and certain transportation enhancements.

a. Transportation Enhancements (TE) and other Federal-aid Programs. Transportation Enhancements are special projects related to ground transportation facilities that improve the quality of life in Pennsylvania. The TE program includes project categories such as Hometown Streets and other enhancements such as bicycle and pedestrian paths, streetscapes, scenic overlooks, rest areas and rehabilitation of historic transportation related buildings such as train stations.

All Federal-aid special transportation programs such as TE projects involving pedestrian accessibility must include current applicable pedestrian accessibility facilities whether or not the project is located within the public right-of-way. The 2010 ADA Standards include special guidelines for building alterations and historic preservation projects.

b. Highway Occupancy Permits. The need to provide new or additional pedestrian access along and across existing highways as a result of new adjacent property development must require the approval and issuance of a PennDOT Highway Occupancy Permit (HOP) to the local government or adjacent property owner. The HOP may include the requirement that ADA compliant pedestrian facilities be made a part of the permit conditions.

The permittee shall be responsible to continuously maintain the facilities including curbs, sidewalks and curb ramps so as to conform to the permit and so as not to interfere or be inconsistent with the design, maintenance, and drainage of the highway, or the safe and convenient passage of traffic upon the highway. Curb ramps are an integral part of the entire sidewalk system.

For ADA facilities in PennDOT ROW, PennDOT should complete, or verify the completed, Curb Ramp Inspection Forms (CS-4401) and approve the Technically Infeasible Forms for all ADA Curb Ramps and pedestrian facilities that are appurtenant and integral to the function and operation of driveways / local roads where they intersect the State Route. If ADA facilities are located outside PennDOT ROW and are deemed integral to the function / operation of a driveway / local road at the intersection of a State Route, the HOP applicant should prepare and submit any Technically Infeasible Forms for ADE approval.

This includes all curb ramps crossing State Routes, curb ramps crossing local roads at the intersection of State Routes, and curb ramps constructed as part of commercial / residential / industrial driveways that provide access to or from State Routes.

Pedestrian facilities that are not appurtenant and integral to the function of driveways / local roads do not require PennDOT approval or oversight. When permit plans indicate the construction of any pedestrian facilities, the following note should be included on the plans.

"CONSTRUCT ALL PROPOSED PEDESTRIAN FACILITIES ON THESE PLANS TO COMPLY WITH THE AMERICANS WITH DISABILITITES ACT, PUBLIC RIGHT-OF-WAY ACCESSIBILITY GUIDELINES (PROWAG), AND THE 2010 ADA STANDARDS."

Appropriate accessibility guidelines, construction standards and specifications or other approved construction details must be used in the preliminary and final design stages of all projects to ensure accessibility facilities are constructed where required in the project.

2. Minor Alteration Projects. Minor or Betterment alteration projects can affect access, circulation, or use of existing facilities within the existing right-of-way. Minor or Betterment Projects that could affect existing pedestrian access and trigger the need for installation of or upgrading of accessibility facilities are listed below.

- Milling, resurfacing, restoration, rehabilitation and reconstruction for pavement improvements and widening, intersection improvements and utility adjustments
- Roadway signalization – Placement of poles and control panels
- Pedestrian signalization – Placement of poles and control panels
- Signing – Placement of poles or posts
- Roadway lighting – Placement of poles, junction boxes and control panels
- Construction of grade separation structures – Overpasses and underpasses
- Rehabilitation or replacement of any length bridge structure
- Shoulder rebuilding and widening – Adjoining or part of a pedestrian access route
- Inlet replacement – Inlet locations affecting pedestrian routes
- Guide rail replacements – Adjoining or part of a pedestrian access route
- Fringe parking areas – Parking and pedestrian circulation
- Safety rest areas and welcome centers – Work affecting parking and pedestrian circulation
- Transportation Enhancements – Projects relating to public use of highway facilities and streetscapes

Resurfacing is an alteration that improves the vehicular paths of the roadway. It is also an alteration to pedestrian paths that cross the altered roadway; therefore the pedestrian paths must be upgraded to the latest ADA requirements. A federal court case ruled the curb ramps at the end of the altered pedestrian path must also be considered altered and must be upgraded. Source: Kinney v. Yerusalim, 9 F.3d 1067 (3d Cir. 1993), cert. denied, 511 U.S. 1033 (1994).

These minor alteration projects are general examples only and each operation must be assessed individually in relation to any existing pedestrian accessibility feature.

3. Non-alteration Projects. Minor or Betterment Projects that in all likelihood will <u>not</u> affect access, circulation, or use of existing facilities within the existing right-of-way are listed below:

- Truck escape ramps
- Guide rail removal or replacement not affecting pedestrian access routes
- Roadside slope flattening
- Pavement markings and line striping
- Shoulder rebuilding in areas not affecting pedestrian access routes
- Signal maintenance / signal head replacement
- Sign maintenance / replacement
- Roadway lighting maintenance including luminaire and bracket arm replacements
- Truck weigh stations
- Wetland replacement mitigation
- Safety hardware upgrades
- Drainage – replacement of manholes, endwalls, pipes, culverts and inlets not affecting pedestrian access routes
- Bridge painting

Normal maintenance activities are <u>not</u> considered alterations and do not require simultaneous improvements to pedestrian accessibility under the ADA. Maintenance activities include actions that are intended to preserve the roadway system, retard future deterioration and maintain the functional condition of the roadway without increasing the structural capacity. Maintenance activities can include seal coats, slurry seals, and other

preventive maintenance items such as crack sealing / joint repair, pavement / pothole patching, shoulder repair, repair to drainage systems, emergency repairs and pipe cleaning.

4. Technically Infeasible. All construction must meet PennDOT's standards. For existing sites where it is technically infeasible to construct facilities fully to current PennDOT's standards, as determined by using sound engineering judgment, a "Technically Infeasible Form" documentation must be prepared. This must be submitted and approved before construction to document that access has been designed to the maximum extent feasible. The Technically Infeasible Form (similar to a design exception) must include the following:

- Project site constraints that would adversely affect installing the appropriate access feature
- Reasons why the access feature cannot be designed to the desired standards
- The design solution derived to provide access to the maximum extent feasible

Project site constraints may include but are not limited to:

- Limited right-of-way
- Existing utilities
- Existing buildings, walls or vaults
- Environmental impacts
- Historic impacts
- Safety
- Roadway profile slope

Project scope, not cost, will determine when existing site constraints justify the use of the Technically Infeasible Form. In certain situations, existing site constraints may justify the use of a design that provides access to the maximum extent feasible if removing the existing site constraints would require additional work that is not included as part of the project scope. For example, a resurfacing project may not include removal of existing site constraints in the project scope and may be justification for installing a facility that provides access to the maximum extent feasible. However, for a widening project that includes right-of-way acquisition, utility relocations and removing underground vaults as part of the project scope, these constraints will not be satisfactory justification for installing a facility that does not meet PennDOT's standards since they are part of the project scope. The existing site constraints must be evaluated on a case-by-case basis using sound engineering judgment before submitting a Technically Infeasible Form.

a. Technically Infeasible Scenario #1. For an overlay project, the designer suggests that an existing Type 1 curb ramp without a landing provides the maximum access possible since the curb ramp is located within limited right-of-way and is part of a narrow sidewalk. In this situation the designer is incorrect. A Type 2 curb ramp may be installed and provide full access, the Type 1 curb ramp design is not appropriate because the level of access can be improved. The Type 2 curb ramp must be installed to provide access fully meeting the standards.

b. Technically Infeasible Scenario #2. For an overlay project, the designer suggests that an existing Type 2 curb ramp with a ramp slope of 1V:10H (10.00%) provides the maximum access feasible after evaluating all possible design alternatives within the project scope. The existing site constraints included narrow sidewalk width and limited right-of-way. In certain situations the designer may reach the conclusion that a curb ramp cannot be improved without going beyond the project scope and may not be required to upgrade the facility. For this scenario it is important to evaluate if the facility is accessible. The 1V:10H (10.00%) curb ramp slope is greater than the maximum curb ramp slope but still provides a general accessible solution.

c. Technically Infeasible Scenario #3. For an overlay project, the designer suggests that an existing Type 1 diagonal curb ramp should be replaced with a Type 4A curb ramp with a slope slightly exceeding the standards due to limited sidewalk width. An evaluated alternative that included the installation of two fully compliant Type 2 curb ramps was dismissed by the designer because it required the adjustment of an existing electric box where one of the curb ramps would be placed. In this situation, utility adjustments are not part of the project scope. However the utility adjustment would not have a major impact on the

project and is not suitable justification for installing a curb ramp that does not fully meet the standards. Relocating existing utilities, obtaining right-of-way, or performing other out-of-scope work in order to fully meet the standards must be evaluated on a case-by-case basis.

d. Technically Infeasible Scenario #4. For an off-alignment project, the designer suggests that an existing Type 1 curb ramp without a landing provides the maximum access possible due to proposed utility locations and limited right-of-way. New construction projects are held to the highest degree of PennDOT's standards since the project scope provides the greatest flexibility to provide accessible facilities. In the above scenario, the site constraints listed are part of the project scope and are not valid. Additional right-of-way or alternate placement of proposed utilities will be required to meet PennDOT's standards.

The Technically Infeasible Form will be reviewed prior to construction by the District ADA Review Committee. It is recommended that the District ADA Review Committee have the following members or disciplines: Traffic, Bike/Pedestrian Coordinator, Safety, Maintenance, and Community Relations Coordinator. The District ADA Review Committee will make a recommendation for approval to the ADE of Design or delegate. Once approved by the ADE of Design or delegate, the Technically Infeasible Form will be submitted as part of the contract documents. For Design/Build projects, the Technically Infeasible Form will become part of the contract documents upon approval. The District will be responsible for maintaining a copy of all Technically Infeasible Forms. An electronic copy must be sent to the ADA Coordinator at Central Office where the data will be archived into a database.

See Chapter 6, Appendix A, *Technically Infeasible Form*, for additional information.

C. Unaltered Existing Facilities. As per the Title II requirements under the ADA, existing facilities and programs, even though they have not been altered, must not deny access to persons with disabilities. A range of methods are available to ensure that people who have disabilities are not denied access to public facilities and programs. In many situations, an operational solution may achieve program accessibility without the need for construction.

In fact, existing facilities do not have to be made accessible if other methods of providing access are effective. Except for the installation of curb ramps, which are specifically required for program access, structural changes are an option of last resort.

A pedestrian circulation system (sidewalks, street crossings, shared-use paths in the public right-of-way) is a facility that a local government provides for its citizens. It is the general availability of this facility to people with disabilities that must be evaluated when considering the existing pedestrian environment. Full compliance with facility standards developed for new construction and alterations may not be required to achieve access.

Facility accessibility can be thought of as providing a basic level of usability. It targets high-priority access improvements (curb ramps) that eliminate major barriers to the use of existing facilities, so that people with disabilities are not excluded from participation. Program accessibility requires careful planning to identify those efforts that will provide the greatest access to the available resources. Non-construction approaches may include alternate accessible routes, relocation of services or activities to accessible locations, or providing the service or benefit directly to the individual.

Jurisdictions should consider whether such operational solutions would be sustainable over the long term. For some rights-of-way elements, structural changes may be more economical. In an existing right-of-way that is not otherwise being altered, the minimum requirement for achieving program accessibility is the installation of curb ramps at selected locations where existing pedestrian walkways cross curbs. This work must be identified in the transition plan.

6.3 PROJECT TYPE EXAMPLES

A. Maintenance Type Projects. The following examples represent projects that include routine maintenance and repair work that generally does not impact, disturb or modify pedestrian usability. Note: Resurfacing projects are not considered routine maintenance and are not represented with the following examples.

- Repair of drainage pipes or inlets that result in a small portion of sidewalk being removed and replaced. This type of work will require only that the sidewalk be repaired in-kind and no additional installation / upgrade of sidewalk or curb ramps would be required. However this project would not be considered a maintenance type project if a significant length (equal to or greater than 30 m or 46 m^2 (100 ft or 500 ft^2)) of sidewalk is removed.

- Utility repairs or relocations that result in a small portion (less than 30 m and less than 46 m^2 (less than 100 ft and less than 500 ft^2)) of sidewalk being removed and replaced would require only repair in kind and would not trigger any new installation or upgrades to existing sidewalk or curb ramps. The placement of utilities may not decrease the accessible path width to less than 1220 mm (4 ft).

- Repair of damaged traffic barrier adjacent to sidewalk in an urban area would not require upgrade of the adjacent sidewalk or curb ramps.

- Repair of potholes, spot patching of roadway or crack sealing of roadway would not require any installation or upgrades to adjacent sidewalks or curb ramps.

- Modifications to existing traffic signals (non-structural) such as repair, replacement and maintenance of traffic signal head modules, pedestrian signal head modules, loop detectors, video detectors, microwave detectors, signal controller features, wiring, junction boxes, traffic control signage, roadway lighting or cameras would not require any installation or upgrades to adjacent sidewalks or curb ramps. However, if the modification creates a negative impact to the existing sidewalk or existing pedestrian push buttons are not accessible, improvements or upgrades must be installed.

- Re-striping or modifications to the pavement markings on a roadway would not require installation or upgrade of existing sidewalk or curb ramps. If new striping is installed to designate a crossing to curbs without curb ramps at the crossing, it will be necessary to install curb ramps.

- Spot patching or repair of existing sidewalk to correct buckling, cracking or other severely deteriorated conditions would not require installation of new or upgrade of existing sidewalk. However, as a rule of thumb, if more than 50% of a run of sidewalk is being repaired, the entire length should be upgraded to PennDOT's standards. This work may include installing or upgrading curb ramps.

- Slurry seals to correct surface friction or seal entire roadway to address cracking would not require upgrade of the curb ramps. These applications must be feathered into the curb ramp to provide a flush transition.

- Emergency repairs would not require upgrade or installation of curb ramps. Emergency repairs include interim pavement patching or thin overlays for severely distressed pavement due to a harsh winter, natural or man-made disasters.

- Traffic signal timing modifications, repair or maintenance of pedestrian pushbuttons and the addition or modification of a closed loop system would not require modifications to meet PennDOT's standards.

B. Alteration Type Projects. The following projects include alterations that affect pedestrian usability. That is, when an existing element is replaced, it must either meet current PennDOT's standards or have an approved Technically Infeasible Form for any element that does not meet full compliance. The work does not require any additional work beyond the altered facilities; however, it may be beneficial to upgrade other unaltered pedestrian facilities as part of the project to improve access. Resurfacing is considered an alteration. Examples of Alteration Type Projects include:

- A resurfacing project, including maintenance resurfacing, affects the usability of pedestrian paths that cross the resurfacing area. This alteration project must install new curb ramps where any pedestrian route crosses a curb and upgrade existing curb ramps to the latest PennDOT standards. Provide access to pedestrian push buttons to the maximum extent feasible. The resurfacing project would not require the existing sidewalks or driveways within the limits of the project to meet PennDOT's standards since the sidewalk and driveways are not altered as part of the project.

- When utility or roadway maintenance work such as mechanized patching requires the resurfacing of the full width of the roadway and that resurfacing goes through a Pedestrian Accessible Route (PAR), it is considered an alteration and the curb ramps on both ends of the PAR must be in compliance with ADA standards to the maximum extent feasible. Full width of the roadway is defined as the outside travel lane edge to outside travel lane edge. See figure below.

  When utility or roadway maintenance work requires resurfacing of one or more travel lanes, but not the full width of the roadway, and the resurfacing does not extend the pavement lifecycle, curb ramp upgrades will not be triggered. Documentation should be put into the file indicating the pavement resurfacing schedule has not been affected due to the lane resurfacing required by the utility or roadway maintenance work. Adjusting the utility or roadway maintenance work resurfacing requirements or other utility or roadway maintenance scopes of work to avoid ADA requirements is not allowed.

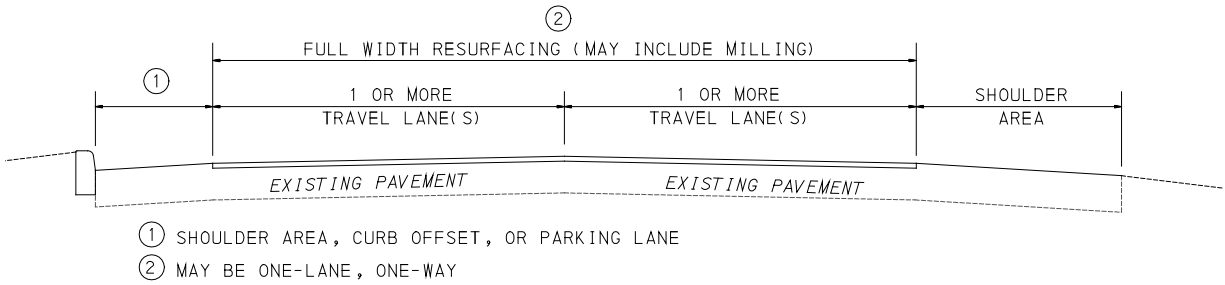

- A signal project includes installing a new signal pole and push buttons on one corner of an intersection. Part of a curb ramp flare must be sawcut and removed in order to install the signal pole foundation. The installation of a signal pole is an alteration to the pedestrian push button but not an alteration to the sidewalk or street even though a small portion of the curb ramp is impacted and therefore the curb ramp does not need to be upgraded as a part of this project. If the pole is placed where it has a negative impact on the pedestrian access route, the negative impact must be addressed.

- A signal project included removing an existing signal pole, installing a new signal pole and installing push buttons on one corner of an intersection. The corner of the intersection has sidewalk but is missing a curb ramp. The installation of the pedestrian push button and signal pole is not an alteration to the sidewalk or street; however, PennDOT may not deny access to the push button and must provide access to the push button.

- Traffic signal mast arm modifications/relocations, addition/upgrade/relocation of the pedestrian detection system (push buttons, audible system, etc.), addition of a new pedestrian signal system that was not previously incorporated into the intersection, lane widening that modifies the existing pedestrian system (relocation of pedestrian poles, timing modifications, etc.) are all alterations that would require the altered facility to meet PennDOT's standards.

- A utility company decides to relocate its utility lines underground, requiring the reconstruction of a substantial length [equal to or greater than 30 m (100 ft)] of existing sidewalk. The newly constructed sidewalk will need to meet PennDOT's standards. The limits of the sidewalk to be replaced must be extended to meet logical termini. Curb ramps must be installed or upgraded and must be provided at all street crossings and signalized entrances unless a pedestrian study determines accommodations are not warranted. The limits will be determined by the Assistant District Executive (ADE of Design, ADE Services, or their designate using sound engineering judgment, considering factors such as ownership of

the sidewalk, degree of impact, complexity of the solution and overall project scope. If the work disturbs 50% or more of the sidewalk width and the limit of sidewalk reconstruction is within 15 ft of a pedestrian crossing, curb ramp upgrades will be required for that corner or mid-block crossing. For projects over 300 ft, if a pedestrian crossing or curb ramp is within 5% of the total disturbed length of sidewalk, curb ramp upgrades will be required for that corner or mid-block crossing. For example, a 572 ft sidewalk disturbance would be required to extend 28.6 ft to upgrade a crosswalk or install a required crosswalk. The measurement will be from the end of disturbance to the edge of the existing (or missing) landing or ramp or crosswalk line.

- Striping (not restriping) of a crosswalk improves the pedestrian crossing and is an alteration. Alterations to the pedestrian path must also upgrade curb ramps at the crossing.

- Minor widening or geometric improvements are being made to a non-curbed section of roadway in a rural area with no evidence of existing pedestrian activity (i.e., worn dirt paths, visual observation of people walking in roadway, adjacent bus stops, adjacent pedestrian destinations such as schools or shopping centers, etc.). The project would not require the installation of new sidewalks if it is not within a designated growth area or if a pedestrian study does not support the need.

- A substantial section of sidewalk is to be reconstructed under an area-wide sidewalk contract. The entire section will be required to be replaced to PennDOT's standards. The sidewalk must extend to logical termini. As a rule of thumb, if more than 50% of a run of sidewalk is being replaced, the entire length should be upgraded to PennDOT's standards.

C. Reconstruction and New Construction Type Projects. The following projects are typically major projects including new construction, reconstruction, retrofit projects, sidewalk retrofit projects and community enhancement projects. These projects will be held to the highest standards regarding pedestrian usability and ADA compliance. A Technically Infeasible Form will be required for any reconstructed pedestrian facility that does not meet PennDOT's standards. Technically Infeasible justification may only be applied to New Construction in very limited circumstances. These projects must evaluate the need for pedestrian circulation paths, including PAR's between logical termini. Pedestrian needs should be evaluated in the planning phase (Pre-TIP), refined and/or reevaluated in scoping and preliminary engineering. Coordination with the local municipality is critical to this process.

- New construction or reconstruction of a curbed roadway must evaluate adding new or upgraded sidewalks and curb ramps to PennDOT's standards at all street crossings and signalized entrances.

- New construction or reconstruction of a bridge in an urban area or an area with evidence of existing pedestrian activity (i.e., worn dirt paths, visual observation of people walking in roadway, adjacent bus stops, adjacent pedestrian destinations such as schools or shopping centers, etc.) must evaluate adding new or upgraded sidewalks and curb ramps to PennDOT's standards.

- A community enhancement project must evaluate including new sidewalk or improve the existing sidewalk and curb ramps to PennDOT's standards within the project limits and extending the limits to logical termini. If aerial utilities are to be moved to support the project, they must be either relocated entirely outside of the new sidewalk or, if necessary, within the sidewalk (last resort) outside of the PAR where they will not become obstructions to ensure access for all pedestrians to the maximum extent possible.

- A park and ride lot or an expansion to an existing park and ride lot must evaluate providing or upgrading sidewalks and curb ramps that meet PennDOT's standards to access adjacent sidewalks, bus stops or transit stations. When transit loading areas are within the park and ride lot, they must meet the requirements of the proposed 2011 PROWAG.

- When it is determined through a pedestrian study that sidewalk is to be included in the project scope, the municipality will be responsible for future maintenance. A sidewalk maintenance agreement must be signed or sidewalk will not be installed or reconstructed. See Section 6.6.

- Minor widening or geometric improvements are being made at an intersection with curb, but no existing sidewalk. If a pedestrian study determines there is a need to accommodate pedestrians (i.e., local or regional plans, worn dirt paths, visual observation of people walking in roadway, adjacent bus stops, adjacent pedestrian generators and attractions such as schools or shopping centers, etc.) new sidewalk meeting PennDOT's standards should be evaluated for construction in the area of the widening and extend to logical termini. Curb ramps must also be installed or upgraded where pedestrian paths cross curbs.

- A resurfacing project includes the addition of new sidewalk within the project limits. All new sidewalk and curb ramps within the project limits must meet PennDOT's standards.

- A developer widens the roadway to provide an auxiliary lane. As a result, the existing sidewalks are impacted. The developer must replace the impacted sidewalk along their frontage, and may need to replace the remaining pedestrian facilities within the project limits to PennDOT's standards.

- A developer wants to modify their existing access onto PennDOT right-of-way. There currently is no sidewalk along the property frontage and there is evidence of existing pedestrian activity and/or existing sidewalk along the frontage of adjacent businesses. The developer must install curb ramps meeting PennDOT's standards at all street crossings and signalized entrances along the property frontage. The developer may be required to install new sidewalk along the property frontage and extend the improvements beyond the frontage to logical termini in accordance with municipal ordinance to provide pedestrian continuity and connectivity.

- New construction or reconstruction of shared use paths must meet PennDOT's standards, which includes providing curb ramps wherever a trail crosses a curb.

- Placement of a new signalized intersection or complete upgrade of an existing signalized intersection must meet PennDOT's standards.

D. Connections to Existing Facilities. All construction must meet PennDOT's standards. At the limits of the project or limits of construction, connections to the existing sidewalk or other facilities will be required. At these tie in locations, deviation from the standards may be necessary to match the existing facility. For example, as part of a curb ramp upgrade, a small portion of sidewalk has been reconstructed at a width equal to 1525 mm (60 in). The existing sidewalk width is equal to 915 mm (36 in) at the tie in location. In this example the sidewalk width will transition from the proposed width to the existing width. See Publication 72M, *Roadway Construction Standards*, RC-67M for Transition to Existing Sidewalk Detail. A Technically Infeasible Form is not required for transitions required to connect to existing facilities.

6.4 LIAISON WITH LOCAL GOVERNMENT AND PRIVATE PROPERTY OWNERS

Maintaining the proper liaison with local governments and school districts concerning the installation and funding of accessibility facilities is an important part of this policy. Local governments must be kept informed of any adjacent roadway project scope of work that entails accessibility facilities that may affect their facilities or require their participation in funding or maintenance responsibilities.

A. Americans with Disabilities Act: Reimbursement and Maintenance for Curb Ramps with Local Municipalities. Resurfacing projects, including overlay, wearing course resurfacing and mill and fill projects, are considered an alteration to the roadway and to any pedestrian path that is crossed. As per Title II requirements under the ADA, when a facility is altered, the facility must meet the current standards. A federal court decision (Kinney v. Yerusalim, 1993) determined the pedestrian crossing and the curb ramps are to be considered as a single unit. Therefore, when the pedestrian crossing is altered, the curb ramp is also considered altered and must be reconstructed or upgraded to meet the current standards by the entity performing the alteration. If PennDOT performs the resurfacing project or impacts the pedestrian path, PennDOT is ultimately responsible to see that all curb ramps meet the current PennDOT standards.

Coordination must be completed with the local municipality to discuss financial and maintenance responsibilities.

1. 100% Federal Funded Projects.
- PennDOT will not seek any reimbursement from the municipality.

2. 100% State Funded Projects.
- Pedestrian facilities that provide access across state routes – PennDOT will fully fund.
- Pedestrian facilities that provide access across local roads – Municipality will fully fund.
- Pedestrian facilities that provide access across both state routes and local roads – 50/50 cost sharing.

3. Federal State and Local Funded Projects.
- Each party will be responsible for their percentage of the total project cost.
    - See Chapter 6, Appendix B, for Charts 1-6, funding scenarios.

As per State Highway Law of 1945, local municipalities will be responsible for maintaining all structures located outside of the curb lines. A maintenance agreement will be required for all sidewalk installation and replacement projects, except projects performed under an HOP. The maintenance agreement process is to be completed in the design phase of the project, prior to advertising. Maintenance agreements will not be required for installation or replacement of curb ramps and/or level landings where such installation or replacement is done to provide ADA compliant facilities.

According to the State Highway Law of 1945, Sections 502, 513, 522 and 542, the Secretary of Transportation has determined that the Department will perform roadway maintenance between curblines and will not perform maintenance for pedestrian structures such as, but not limited to, curb, sidewalks, curb ramps and level landing areas. This includes level landings providing access to pedestrian pushbuttons. These pedestrian structures located outside of the curb lines will be maintained by municipalities. The only exceptions to this allocation of maintenance responsibilities are those set forth specifically by agreement [or for such structures on bridges maintained by the Department].

Curb ramps and level landings are portions of the sidewalk system that provide ADA compliant pedestrian accessibility across the roadway and to pedestrian pushbuttons. Curb ramps and level landings are installed pursuant to ADA requirements, not Section 670-416 of the State Highway Law.

With respect to sidewalk installation or replacement projects, if a municipality chooses not to sign the maintenance agreement, the Department can (a) cancel the project; (b) reduce the scope of work for the project, or (c) program a project in another municipality that is willing to sign the agreement. As part of the cooperation, a local government or group of local governments may choose to meet with the Department to map out long range plans.

A series of coordination letters and a reimbursement and maintenance agreement has been developed to expedite coordination with municipalities (See Chapter 6, Appendix C). The municipality has several methods of reimbursement:

1. The municipality must make payment to the Commonwealth in full within thirty (30) days of receipt of such invoice.

2. The municipality, after receipt of such invoice, must make monthly payments to the Commonwealth for a period of one (1) year. The payments must be in equal amounts and total all costs.

3. The municipality must make payment to the Commonwealth in full after receiving the necessary funds from a Pennsylvania Infrastructure Bank (PIB) loan. The municipality must make payment to the Commonwealth in full within thirty (30) days of receipt of such loan, which must be no longer than sixty (60) days after completion of the Project.

4. The municipality authorizes the Commonwealth to withhold and apply a portion of the municipality's Liquid Fuels Tax Fund allocation as necessary to reimburse the Commonwealth in full for all costs.

Should municipalities choose not to participate in funding their curb ramps, the Department will adjust the project limits of work. The Department will address curb ramps along state routes only and adjust milling and resurfacing operations to follow along the face of curb thereby not impacting the curb ramps along the local roads. In some

cases it will be necessary to upgrade the curb ramps along the local road in order to correctly upgrade the curb ramps along the state route. If the municipality chooses not to participate in funding curb ramps, the Department will fund the local curb ramps in order to comply with ADA regulations.

B. Installing Curb Ramps Located Outside of the Public Right-of-Way. The acquisition of right-of-way for the construction of curb ramps is dependent on the scope of work for the project. If the project scope includes right-of-way acquisition, then right-of-way must be acquired where applicable for curb ramp construction. However, if the project scope does not include right-of-way acquisition, then right-of-way will not be acquired for curb ramp installations. The following should be noted:

1. PennDOT typically does not have maintenance responsibility beyond the face of curb but still may have right-of-way that extends beyond the face of curb.

2. Municipal right-of-way is public right-of-way. Curb ramps and other pedestrian facilities may be installed or upgraded within the municipal right-of-way.

For sidewalk or curb ramp construction on private property (sidewalk area is in public use and project scope that does not include right-of-way acquisition), perform the following coordination with the property owner:

1. Send initial certified letter (Authorization to Enter Introduction) to the property owner explaining the scope of the project and the affect on their property. See Chapter 6, Appendix D, Attachment A. Include Form RW-397A, Authorization to Enter (Waiver of Claim).

2. Set up an appointment with the property owner and **PennDOT personnel** to have property owner sign off on Form RW-397A, Authorization to Enter (Waiver of Claim).

3. Outcome 1. Property owner signs Form RW-397A, Authorization to Enter (Waiver of Claim).
- Construct curb ramp to current standards.

4. Outcome 2. Property owner refuses to sign Form RW-397A, Authorization to Enter (Waiver of Claim).
- Send a second certified letter (Authorization to Enter Failure to Respond) notifying the property owner of their liability. See Chapter 6, Appendix D, Attachment B.
- Depending on available right-of-way:
  - Install new or upgrade existing curb ramp to the maximum extent feasible.
  - Do not install new or upgrade the curb ramp, and add the existing curb ramp to the ADA Transition Plan to be addressed in the future.
  - Document that authorization to enter has been denied from the property owner (with the Technically Infeasible Form).

6.5 PEDESTRIAN ACCESS ROUTE

The pedestrian access route (PAR) as defined by PROWAG is a continuous and unobstructed walkway within a pedestrian circulation path that provides accessibility. Pedestrian accessible routes may include parking access aisles, curb ramps, crosswalks at vehicular ways, walks, ramps, roadway shoulders, water table on bridge decks, and lifts. The following sections will discuss many of these facilities separately; however, these facilities share the common requirements of the PAR.

A. PAR General Requirements.

1. Surface Requirements. The surface must be stable and firm with a slip resistant textured finish. A standard test has not been identified for measuring slip resistance; therefore sound engineering judgment must be used in the determination.

2. Elevation Differences. For elevation differences located within the PAR (excluding depressed curb for curb ramps) existing changes in level up to 6.4 mm (0.25 in) in height may remain without any edge treatment. Changes in level greater than 6.5 mm (0.25 in) and less than or equal to 13 mm (0.5 in) height must be beveled

with no slope greater than 1V:2H (50.00%). Changes in level greater than 13 mm (0.5 in) height must be accomplished by means of a sloped surface such as a ramp or curb ramp.

3. Grate Openings and Horizontal Gaps.

a. Expansion Joints. The use of expansion joints should be minimized and their size should be less than 13 mm (0.5 in) in width. Expansion joint material is required where the curb ramp adjoins any rigid pavement, sidewalk, curb or structure. The top of the joint filler must be flush with the adjacent concrete surface.

b. Inlet Grates. Inlet grates located within the pedestrian access route must have spaces no greater than 13 mm (0.5 in) wide in one direction. If gratings have elongated openings, then they must be placed so that the long dimension is perpendicular to the dominant direction of pedestrian travel.

4. Longitudinal Slopes. The least possible slope must be used for the PAR. The maximum desirable slope is 1V:20H (5.00%); however, when the PAR is located within the public right-of-way, including vehicular bridges, the longitudinal slope may match the adjacent roadway profile slope. It may be necessary to temporarily exceed the roadway profile when crossing driveways or providing curb ramps. Where an overpass, underpass, bridge, or similar structure is designed for pedestrian use only and the approach slope to the structure exceeds 5 percent, a ramp, elevator, limited use/limited application elevator, or platform lift shall be provided. Elevators and platform lifts shall be unlocked during the operating hours of the facility served.

5. Cross Slopes. Cross slopes may not exceed 1V:50H (2.00%). The cross slope of curb ramps, blended transitions, and turning spaces shall be 2 percent maximum. At pedestrian street crossings without yield or stop control and at midblock pedestrian street crossings, the cross slope shall be permitted to equal the street or highway grade. See 2011 PROWAG R304.5.3 for more information.

6. Unobstructed Width. Minimum unobstructed widths of 1220 mm (48 in) provide the necessary room for pedestrians using wheelchairs. This is consistent with PROWAG and exceeds the 2010 ADA Standards minimum clear widths of 915 mm (36 in). See Figure 6.1.

Note: The 2010 ADA Standards allow for a 915 mm (36 in) minimum clear width with provisions to allow an 815 mm (32 in) clear width if the obstruction (such as a street sign) is less than 610 mm (24 in). The Department's standards exceed this width. Appropriate application of the 2010 ADA Standards minimum clear width is acceptable in determining if existing facilities are accessible.

a. Protruding Objects. Refer to Figure 6.3. Objects projecting from walls such as signs, telephones, canopies, etc. with their leading edges between 685 mm and 2030 mm (27 in and 80 in) above the finished sidewalk must protrude no more than 100 mm (4 in) into any portion of a sidewalk (Figure 6.3(a)). Objects mounted with their leading edges located less than 685 mm (27 in) or more than 2030 mm (80 in) above the finished sidewalk may project any amount provided they do not reduce the required continuous passage along the sidewalk (Figures 6.3(a) and (b)). Free standing objects mounted on posts may overhang their mountings a maximum of 305 mm (12 in) when located between 685 mm and 2030 mm (27 in and 80 in) above the ground or finished sidewalk provided they do not reduce the required continuous passage along the sidewalk (Figures 6.3(c) and (d)). Note: The 2010 ADA Standards and PROWAG depict overhead clearance as 2030 mm (80 in); **however, refer to the *MUTCD* for traffic signal mounting requirements.**

b. Headroom. Guide rail, handrail or other barriers must be provided when the vertical clearance of an area along or adjoining a sidewalk or continuous passage is less than 2030 mm (80 in) high. The leading edge of such barriers must be located a maximum of 685 mm (27 in) above the finished sidewalk (Figures 6.3(a) and (c-1)).

7. Landing Requirements.

a. Size. A minimum 1220 mm × 1220 mm (48 in × 48 in) landing must be provided where pedestrians perform turning maneuvers or require resting areas. When the turning area is confined by walls, curbs or

other obstructions, the landing must be 1525 mm × 1525 mm (60 in × 60 in). See Figure 6.2 for the 2010 ADA Standards wheelchair turning space requirements for confined spaces.

b. Slope. The surface slope of the landing must not exceed 1V:50H (2.00%) in longitudinal slope or cross slope.

8. Detectable Warning Surfaces (DWS). The PAR must also have a standardized detectable warning surface comprised of truncated domes as detailed in Publication 72M, *Roadway Construction Standards*, RC-67M. For pedestrians with vision impairments, detectable warnings can provide a confirming cue of the street edge. Normally the DWS is installed as part of a curb ramp; however, a DWS must be installed where the PAR crosses streets, alleys or railroads. Detectable warning surfaces should not be provided at crossings of residential driveways since the pedestrian right-of-way continues across residential driveway aprons. However, where commercial driveways are provided with yield or stop control, detectable warning surfaces should be provided at the junction between the pedestrian route and the vehicular route. DWS must be bid as "either/or" items. The contractor can choose from any of the product types listed in Publication 35, *Approved Construction Materials* (Bulletin 15). Requests to use a specific type must be approved by the Bureau of Project Delivery, Highway Delivery Division, Project Schedules, Specifications and Constructability Section.

a. Contrast. Many colors are available for the DWS. It is recommended that the color selection is coordinated with in-place DWS. The DWS must contrast light-on-dark or dark-on-light. Currently a standard test has not been defined to measure the contrast; therefore, contrast must be determined using sound engineering judgment.

b. Dome Arrangement. The domes must be aligned in parallel and perpendicular rows and columns in relation to the edge of the tile or unit. This dome arrangement allows the truncated domes to be installed in the direction of the PAR, path of the wheelchair travel and perpendicular to the grade break at the toe of the ramp or curb ramp. This will provide pedestrians using wheelchairs the ability to maneuver between the domes rather than travelling over them. Older versions of the truncated domes are arranged in diagonal rows in relation to the edge of the tile or unit. This older configuration is still detectable as a warning surface for existing in-place applications, but should not be used for future construction.

c. DWS in Roadway Shoulders. Roadway shoulders are designed and constructed to support the roadway and, as a general rule, are not constructed as a PAR and are not required to comply with ADA requirements. DWS should not be installed in the shoulder. At intersections without sidewalks, connecting trails, or other accessible pedestrian circulation paths systems, marked or unmarked crosswalks to shoulders do not require DWS in the shoulder. In the rare case the shoulder is intended to be a PAR, it should be constructed with a 2% cross slope and DWS will be required in the shoulder at crosswalks. Central Office ADA Coordinator approval is required for construction of shoulders as a PAR. See Section 6.5.B.4.

d. Pedestrian Pushbutton Access. Ramps and level landings to access pedestrian pushbuttons, located behind the shoulder, will still have DWS. DWS should be placed in the ramp or level landing, outside the shoulder, at the back edge of the shoulder. Intersection raised islands that intersect a crosswalk are considered barriers to access and require curb ramps and DWS.

e. At cut-through pedestrian refuge islands, detectable warning surfaces shall be placed at the edges of the pedestrian island and shall be separated by a 610 mm (2.0 ft) minimum length of surface without detectable warnings. Detectable warning surfaces are not required at pedestrian refuge islands that are cut-through at street level and are less than 6.0 ft in length in the direction of pedestrian travel. Where a cut-through pedestrian refuge island is less than 6.0 ft in length and the pedestrian street crossing is signalized, the signal should be timed for a complete crossing of the street.

B. PAR Miscellaneous Requirements.

1. Algebraic Grade Difference. The algebraic grade difference between any two surfaces, such as the road surface and curb ramp, must not exceed 13.33%. Where the algebraic grade difference exceeds 13.33%, a 610 mm (24 in) transition strip must be used to create a more gradual change in grade. Transition strip slope

must not exceed 1V:20H (5.00%). See Publication 72M, *Roadway Construction Standards*, RC-67M for details.

2. Driveway Aprons. This information will supplement the information presented in Chapter 7, Driveways. Excessive cross slope on driveway aprons can be a significant barrier for pedestrian use. A level area with minimal cross slope is necessary for accessible passage across a driveway. Driveway aprons that are constructed like ramps, with steep, short side flares, can render a section of sidewalk impassable, especially when encountered in series, as in residential neighborhoods. Compound cross slopes, such as those that occur at the flares of a driveway apron or curb ramp, may cause tipping and falling if one wheel of a wheelchair loses contact with the ground or the tip of a walker or crutch cannot rest on a level area. Even with narrow sidewalks along the curb, it is possible to design a sidewalk to pass across the driveway apron without exceeding a cross slope limitation of 1V:50H (2.00%). Sidewalks that cross multiple driveways that are close together can create a rollercoaster effect as the sidewalk ramps up and down to cross the driveways. Consider keeping the top of sidewalk at driveway elevation until all driveways have been crossed. Another option is to use a reduced height sidewalk between driveways while trying to keep the ramp slopes under 5%, with 8.33% as a maximum. See Chapter 7, Driveways.

3. Utilities. Existing utilities, such as electric boxes, manholes, inlets, fire hydrants and electric poles, may remain in the PAR given the utility meets the previously mentioned requirements. Proposed utilities should be placed outside of the PAR where feasible or at a minimum where they do not obstruct the PAR.

4. Roadway shoulders and the water table on bridge decks are not constructed to be pedestrian facilities and are therefore not required to comply with ADA requirements, although pedestrians are permitted to use them. Roadway shoulders and water tables on bridge decks should be constructed according to current design standards. If pedestrian needs are such that sidewalks are warranted along the corridor, but cannot be constructed; construct the shoulders according to current standards and, if practical, grade the area adjacent to the shoulder to facilitate future sidewalk installation. In the rare case pedestrian needs warrant construction of shoulders at 2%, Central Office ADA Coordinator approval is required. An executive summary of the pedestrian study and plans needed to give a corridor overview should be submitted with the approval request.

5. When replacing an existing bridge that has sidewalk, and there is no sidewalk on either approach to the bridge, the new bridge may not require sidewalk. The pedestrian study should check to see if there are future plans for sidewalk on the bridge approaches. If both approaches do not have sidewalk and there are no future plans for sidewalks on both approaches, then most likely sidewalk would not be warranted. The new bridge shoulders should be constructed according to current design standards, unless the bridge shoulders provide connectivity between two existing PAR's.

6. On July 26, 2011 the U.S. Access Board released for public comment proposed guidelines for accessible public rights-of-way. The guidelines provide design criteria for public streets and sidewalks, including pedestrian access routes, street crossings, curb ramps and blended transitions, on-street parking, street furniture, and other elements. The specifications comprehensively address access that accommodates all types of disabilities, including mobility and vision impairments, while taking into account conditions and constraints that may impact compliance, such as space limitations and terrain, as indicated in an overview of the rule. The 2011 proposed guidelines, or PROWAG, can be found here: www.access-board.gov/prowac/nprm.pdf.

7. Shared Use Paths are designed for both transportation and recreation purposes and are used by pedestrians, bicyclists, skaters, equestrians, and other users. The U.S. Access Board is currently in the process of developing guidelines for Shared Use Paths. Shared use path design is similar to roadway design but on a smaller scale and for lower speeds. Whether located within a highway right-of-way, provided along a riverbank, or established over natural terrain within an independent right-of-way, shared use paths differ from sidewalks and trails in that they are primarily designed for bicyclists and others for transportation purposes such as commuting to work.

The Advanced Notice of Proposed Rulemaking (ANPRM) for Shared Use Paths, published on March 28, 2011, can be found at: www.access-board.gov/sup/anprm.pdf.

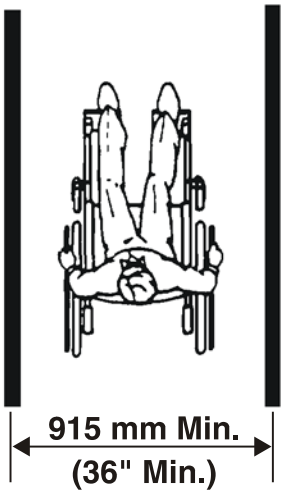

(a)
Minimum Clear Width for Single Wheelchair

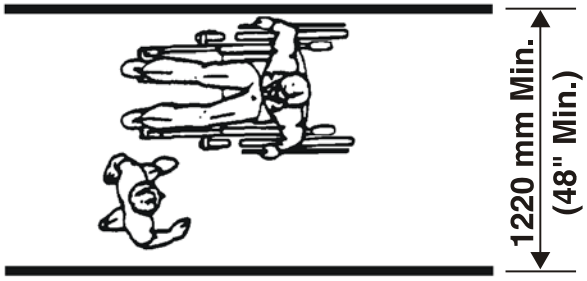

(b)
Minimum Passage Width for One Wheelchair and One Ambulatory Person

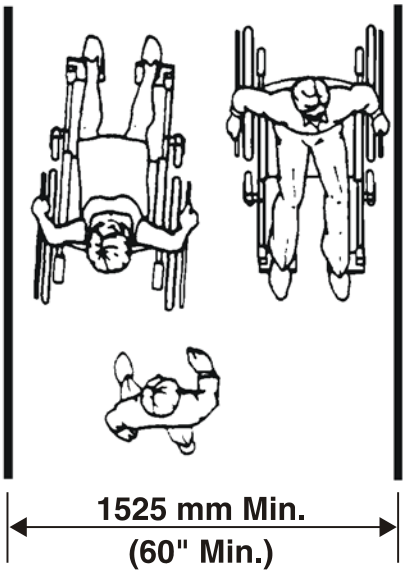

(c)
Minimum Clear Width for Two Wheelchairs

*The 2010 ADA Standards **minimum clear width does not equate to sidewalk width.** Sidewalk widths must be 1525 mm (60 in) minimum. The sidewalk width may be reduced to 1220 mm (48 in) if 1525 mm × 1525 mm (60 in × 60 in) passing areas are provided every 61 m (200 ft). Consider pedestrian volume in determining required sidewalk width. Minimum accessible path must be 1220 mm (48 in) minimum. These widths exceed the 2010 ADA Standards minimum clear width of 915 mm (36 in) for a single wheel chair due to the probability of multiple pedestrians.

FIGURE 6.1
Minimum Clear Width Dimensions

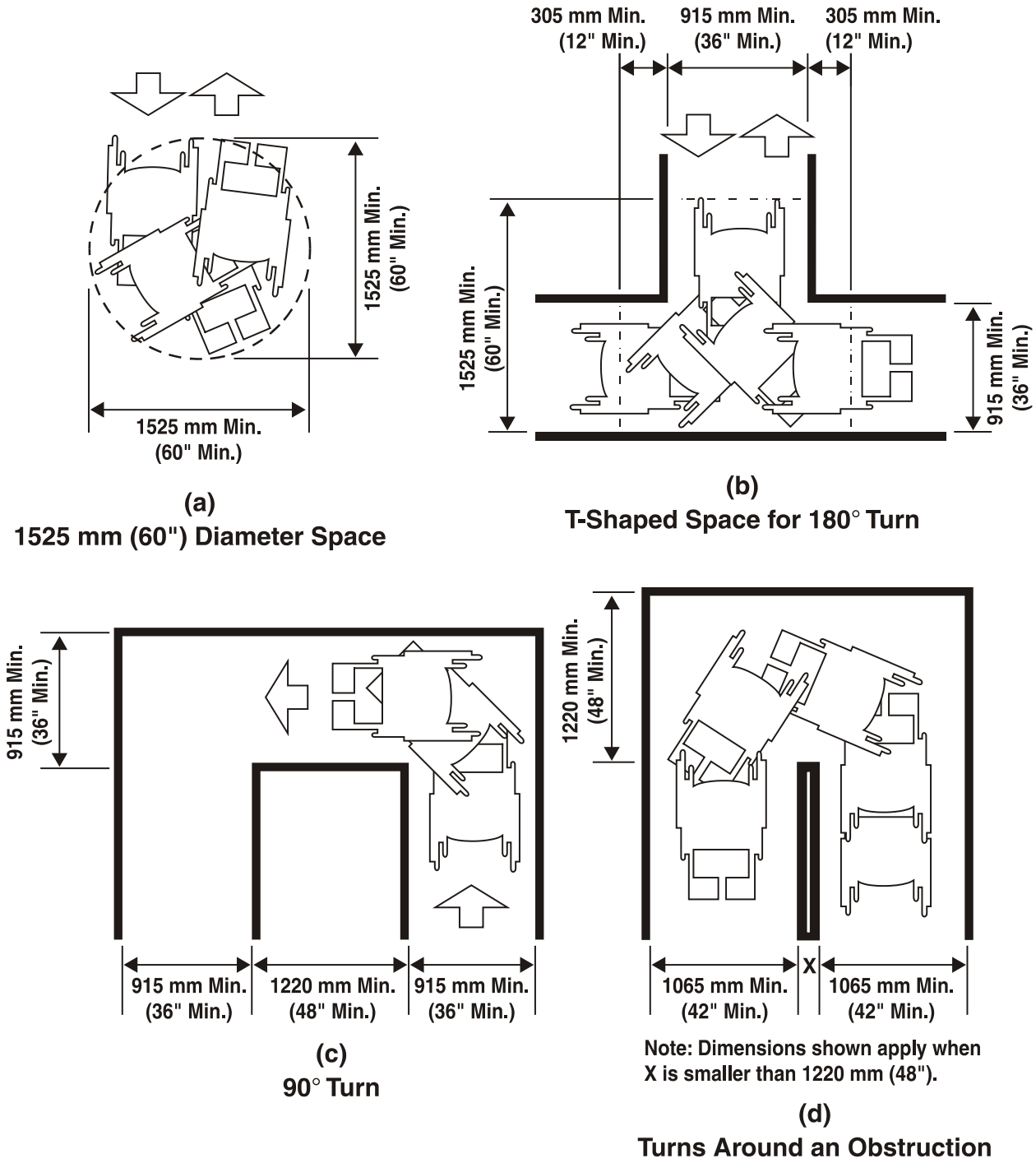

FIGURE 6.2
Wheelchair Turning Space

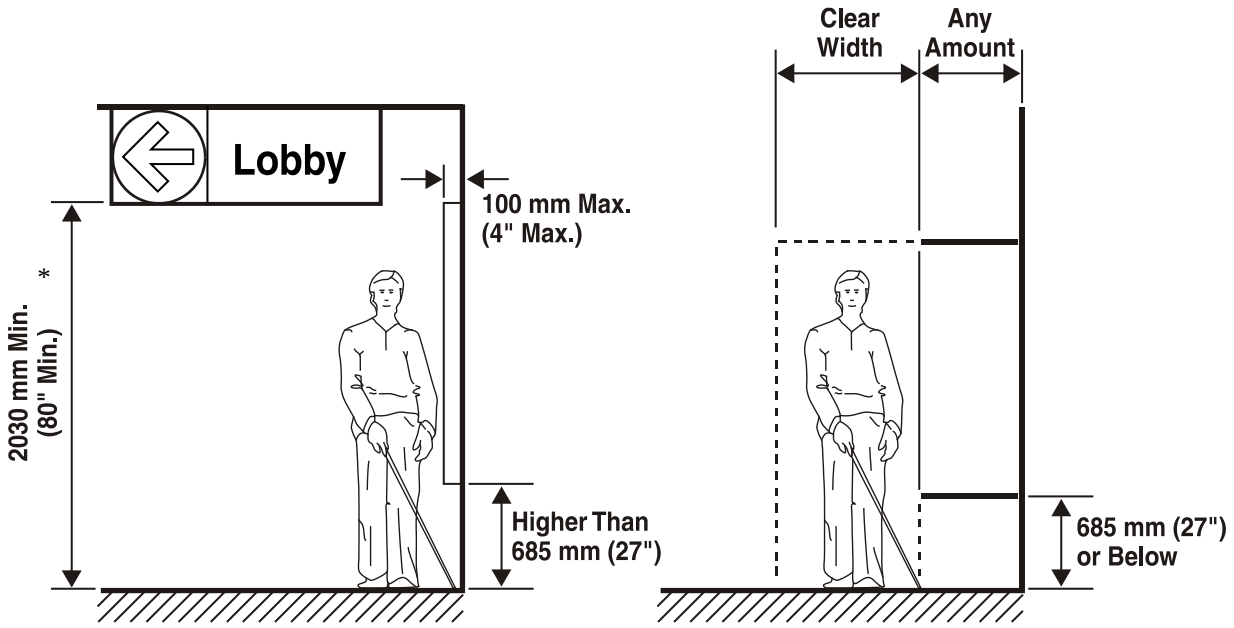

(a)
Walking Parallel to a Wall

*Refer to the *MUTCD* when placing traffic signals.

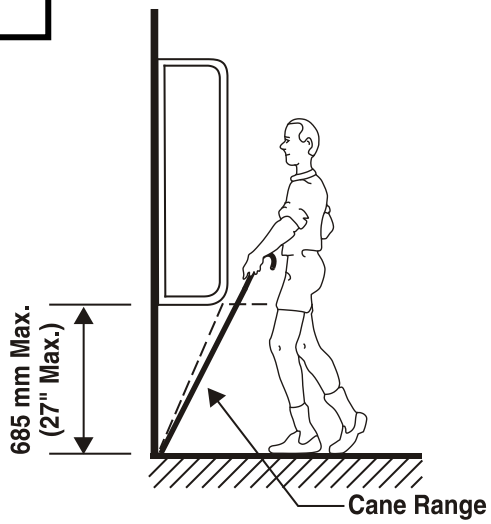

(b)
Walking Perpendicular to a Wall

FIGURE 6.3
Protruding Objects

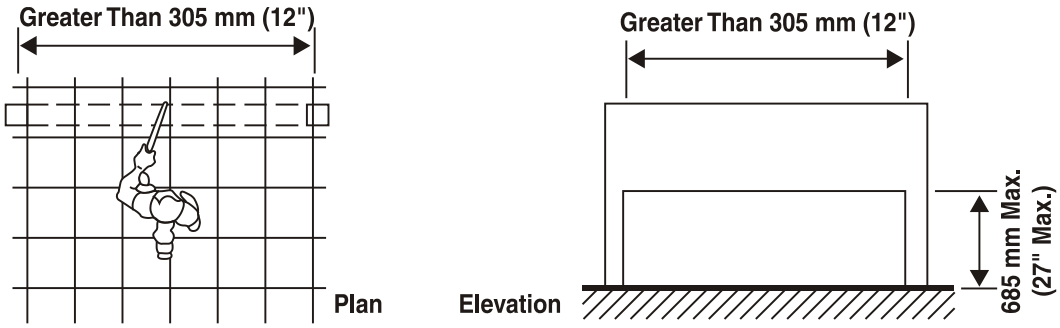

(c) Free Standing Overhanging Objects

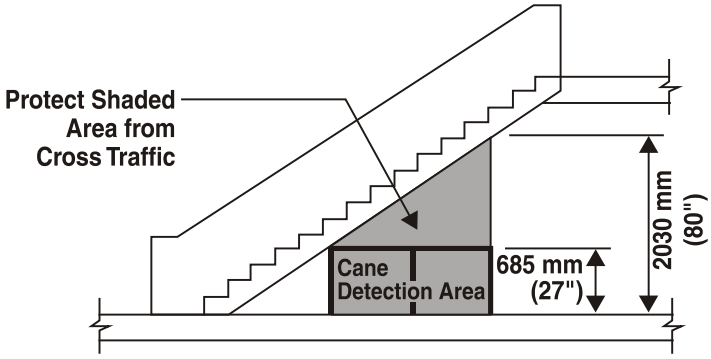

(c-1) Overhead Objects

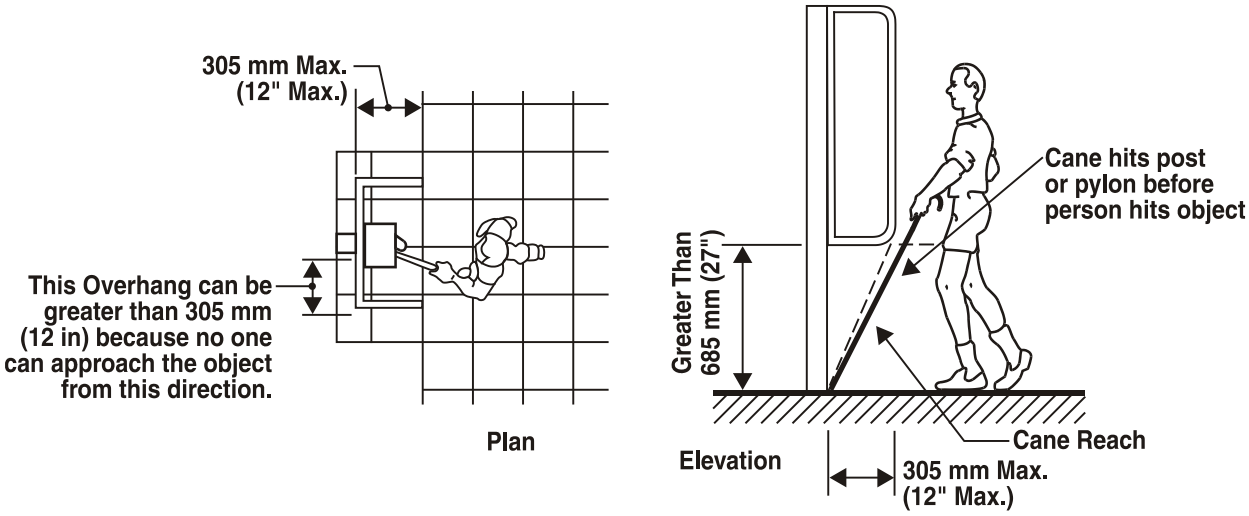

(d) Objects Mounted on Posts or Pylons

FIGURE 6.3 (Continued)
Protruding Objects

8. On June 20, 2007, the Access Board issued a Notice of Proposed Rulemaking (NPRM) to establish accessibility guidelines pursuant to the Architectural Barriers Act (ABA) for camping facilities, picnic facilities, viewing areas, outdoor recreation access routes, trails, and beach access routes that are constructed or altered by or on behalf of the Federal government. The latest version of The Draft Final Accessibility Guidelines for Outdoor Areas can be found at: www.access-board.gov/outdoor/draft-final.pdf.

6.6 SIDEWALKS

Sidewalks are an essential part of the urban street cross section. In rural and suburban areas, community development such as schools, local businesses, industrial plants and recreation areas may result in pedestrian concentrations that make sidewalks a necessity. In many cases, the absence of roadway lighting and higher traffic speeds in rural areas increases the potential for vehicle and pedestrian conflicts.

In general, wherever roadside and land development conditions affect regular pedestrian movement along a highway, sidewalks should be considered. As a general practice, sidewalks should be constructed along any roadway without shoulders where there is a need to provide pedestrian accommodation. Where sidewalks are built along a high-speed highway, buffer areas should be established to separate pedestrians from the travel way.

The following policy on sidewalks is consistent with the Smart Transportation theme to consider all highway corridor modes.

The Department may construct new sidewalks when pedestrian needs have been evaluated and the needs of pedestrians have been determined as follows:

1. A sidewalk has been programmed as a project or project component through the Transportation Improvement Program (TIP) process.

2. A municipality requests the inclusion of sidewalks to be installed as part of the programmed (post TIP) Department project. The municipality has agreed to fund the sidewalk construction and any additional right-of-way costs.

3. The Department may replace sidewalks when an existing sidewalk is removed, relocated or altered, as a result of the Department project.

4. The need to accommodate critical pedestrian safety needs has been identified within the limits of a Department project. (i.e., Pedestrians are forced to walk in traffic lanes between pedestrian generators with an existing or potential crash history.)

In all of the above scenarios, the municipality is responsible for future sidewalk maintenance. A maintenance agreement must be executed or ordinances clarifying maintenance responsibilities must be in place. If a municipality refuses to accept ownership and maintenance responsibilities for a proposed sidewalk, then that sidewalk should be deleted from the scope of work. If practical, grade the area adjacent to the shoulder to facilitate future sidewalk installation. Roadway shoulders and the water table on bridge decks are not constructed to be pedestrian facilities and are therefore not required to comply with ADA requirements, although pedestrians are permitted to use them. Roadway shoulders and water tables on bridge decks should be constructed according to current design standards.

Should the need for sidewalks be identified in the scoping process and the municipality is unwilling to participate in funding and/or maintenance responsibilities, the design and construction of the project should consider features that do not preclude future sidewalk installations. Topographical limitations and funding availability must be considered in this evaluation.

There are several tools available to analyze pedestrian needs:

1. Pedestrian Study Determination - Chapter 6, Appendix E

2. Bike/Pedestrian Checklist - Publication 10X, Design Manual, Part 1X, *Appendices to Design Manuals 1, 1A, 1B, and 1C*, Appendix S.

3. TE-672 Pedestrian Accommodation at Intersections Checklist, see the following link: ftp.dot.state.pa.us/public/PubsForms/Forms/TE-672.pdf

4. Local and Regional Planning Documents

A. Agreements.

1. Establish an agreement between jurisdictional and contributing entities (Department, municipality, developer, project sponsor, etc.) on the cost sharing responsibilities for sidewalks that address the following conditions:

a. A reimbursement agreement clarifies the cost to be borne by the contributing entities of the total sidewalk, curbing and incidental construction costs.

b. A reimbursement agreement clarifies the right-of-way acquisition and costs, and utility relocations, adjustments and cost to facilitate the sidewalk.

c. A reimbursement agreement is required when Federal and/or State funds in combination with local matching funds are used for a project.

2. An agreement is not necessary if the above responsibilities are addressed through the issuance of a Highway Occupancy Permit (HOP).

B. Funding.

1. It is Department policy not to use State funds for sidewalk construction. At the discretion of the Department, State funds may be used for a limited number of applications as described below:

a. ADA compliance for alterations as defined in Americans with Disabilities Act policy and design guidance in this Manual.

b. The construction of new sidewalks to accommodate critical pedestrian safety needs that have been identified within the limits of a Department project.

c. To replace sidewalk where an existing sidewalk is removed, relocated or altered as the result of a Department project.

2. For sidewalks within public right-of-way:

a. Federal funds with local matching funds may be used for construction within public right-of-way when a pedestrian need is identified.

b. State funds may be used for construction within the public right-of-way for those applications noted in Section 6.6.B.1.

3. For sidewalks outside existing public right-of-way:

a. Federal funds may be used on sidewalk outside public right-of-way if the sidewalk will be constructed as part of a Transportation Enhancement (TE) or Federal Safe Routes to School (SRTS) project.

b. Federal funds with local matching funds when applicable may be used on a right-of-way purchase required for sidewalk construction including ADA accommodations, to remediate a critical pedestrian

safety need, to replace an existing sidewalk, or for new sidewalk installations. The project scope includes right-of-way acquisition.

c. Federal funds and/or State funds may be used on private property, when replacing an existing curb ramp or when an "Authorization to Enter (Waiver of Claim)" is in place.

d. State funds may be used on a right-of-way purchase to construct those applications as noted in Section 6.6.B.1.

C. Sidewalk Maintenance. Sidewalk maintenance is the responsibility of the municipality. The municipality may use its maintenance forces or require abutting landowners to maintain the sidewalk through municipal ordinances. Refer to the following for further guidance:

1. A maintenance agreement, generally between the municipality and the Department or municipal ordinances clarifying maintenance responsibilities, is required for a sidewalk on public right-of-way.

2. A maintenance agreement is required for a sidewalk on private property where local ordinances do not stipulate maintenance responsibilities.

D. Additional Support Information.

1. The Federal requirement for consideration of pedestrian need is provided in the Safe, Accessible, Flexible, Efficient Transportation Equity Act - a Legacy for Users (SAFETEA-LU) of 2005. Based on SAFETEA-LU, Federal funds may be used to construct sidewalks. Independent pedestrian-based projects are often funded through Transportation Enhancement, Hometown Streets, or Safe Routes to School projects. Furthermore, the Department's Smart Transportation Policy, Pennsylvania's Mobility Plan, the Statewide Bicycle and Pedestrian Plan and Context Sensitive Solutions, all strongly advocate enhanced pedestrian access and mobility.

2. The Department's legal authority to construct sidewalks emanates in part from the Highway Act of 1945; and Act 120.

3. Financing the cost of a new sidewalk to meet a critical pedestrian safety need may derive from different sources, including but not limited to the Surface Transportation Program (STP), TE, SRTS, Highway Safety Improvement Program (HSIP) funds, State funds, Act 44 funds, County funds, Bridge Bill funds, and Capital funds.

E. Highway Occupancy Permit. New development along existing highways may increase pedestrian traffic to the point that it is desirable to construct curbs and sidewalks. In this situation, the property owner or the local government may request a highway occupancy permit (HOP) to construct a curb and sidewalk within the Department's right-of-way. The permit should be prepared in accordance with the Department's "Highway Occupancy Permit Manual" and will be reviewed to ensure that the development plans identify appropriate curb ramp locations or other ADA accessibility requirements. The request to construct curbs on any State highway where curbs do not presently exist must be reviewed by the responsible PennDOT District Office to determine the effects of the curb on safety, capacity, drainage, and pedestrian access.

F. General Information. The Department should first attempt to enter into a maintenance agreement. However, sidewalks may be constructed by the Department on bridges or through tunnels with no abutting property ownership with whom to attach maintenance responsibility. In these rare cases, the Department may accept maintenance responsibility.

On projects where the Department's work requires the replacement of curbs and the sidewalk is not disturbed, the Department must replace the area of sidewalk needed to provide for curb ramp accessibility.

When the existing sidewalk width is equal to or greater than 1525 mm (60 in), the preferred width of new sidewalk connecting to existing sidewalk will equal the width of the existing sidewalk. When the existing sidewalk width is less than 1525 mm (60 in), the width and cross slope must be transitioned as indicated in Publication 72M, *Roadway*

Construction Standards, RC-67M. The approximate limits of sidewalk removal and replacement will be determined by the cross slope transition and the width transition, where the longest transition length controls.

Where sidewalk is to be replaced to a building line, the floor elevations and entrances will control the grade. Drainage flow must be away from the building at all points on the sidewalk.

Installing barriers such as railings, curbs, or walls along the edge of the sidewalk should be considered when adjacent ground surfaces abruptly fall away from the sidewalk elevation.

6.7 SIDEWALK DESIGN CRITERIA

Sidewalks must meet the following criteria:

1. See PAR requirements in Section 6.5.

2. Minimum sidewalk width of 1525 mm (60 in). The sidewalk width may be reduced to 1220 mm (48 in) if 1525 mm × 1525 mm (60 in × 60 in) passing areas are provided every 61 m (200 ft). Consider pedestrian volume in determining required sidewalk width. Minimum accessible path width may not be less than 1220 mm (48 in). These widths exceed the 2010 ADA Standards minimum clear width of 915 mm (36 in) for a single wheelchair due to the probability of multiple pedestrians. See Figure 6.1 for the 2010 ADA Standards minimum clear width dimensions associated with wheelchair accessibility.

3. Handrails are not required on sidewalks.

4. Sidewalks must be separated from vehicular travel lanes by curbs, planting strips or other barriers which will be continuous except where interrupted by driveways, alleys or connections to accessible elements.

6.8 PEDESTRIAN GRADE SEPARATION FACILITIES

A. Physical Separation. The physical separation of pedestrian and vehicular traffic and their associated control measures vary and depend largely on the following factors for consideration:

1. Pedestrian-generating sources in the area
2. Pedestrian crossing volumes
3. Vehicular traffic volumes to be crossed
4. Type of highway and number of lanes to be crossed
5. Location of nearest crossing facility
6. Number of vehicles turning at intersections

The intersection of pedestrians' access routes and vehicles may sometimes present serious problems, especially where arterial streets traverse a business district and there are intersections with high-volume cross streets. In extreme cases, grade separations for pedestrians provide the only satisfactory solution. Although separations for pedestrians are justified in some instances, at-grade crosswalks will remain the predominant form of crossing. Conflict is minimized if the crosswalks are properly placed, designed, maintained and operated. The use of other physical barriers such as median barriers, guide rail, refuge islands and fencing should also be studied to protect pedestrians at crossing locations.

In most cases, the use of a pedestrian overpass will be more acceptable than an underpass since pedestrians are more reluctant to use an underpass due to other safety considerations.

The aesthetic and economical design of pedestrian grade separation facilities should be encouraged and can best be accomplished by recognizing the need for pedestrian grade separation in the planning and preliminary design stages. This permits maximum latitude in site selection and grade line adjustments between the pedestrian grade separation facility and the highway.

B. Access. All pedestrian grade separation facilities must meet the following minimum accessibility criteria:

1. Access Provisions.

a. See PAR General Requirements in Section 6.5 for additional requirements unless noted otherwise below.

b. Provide pedestrian sidewalks and ramps at all separation structures. Where warranted and possible, a stairway can also be provided in addition to the ramp. In certain situations, access by platform lift (wheelchair lift) or elevator may be necessary. Note: Ramps are used to traverse an elevation difference at various locations such as building entrances; curb ramps are used to traverse the elevation difference of a curb. See Section 6.9 for Curb Ramp Design Considerations.

c. Some persons with mobility impairments may find lengthy ramps more difficult to negotiate than stairs complying with the proper design criteria. Care is necessary to avoid inadvertently creating a mobility problem for one group of people while accommodating another group.

d. Walkways should have a minimum 2440 mm (96 in) width.

e. Maximum slopes of adjoining accessible routes not to exceed a gradient of 1V:20H (5.00%).

f. Walkways with a slope gradient greater than 1V:20H (5.00%) will be considered ramps.

2. Ramps and Landings.

a. Use flattest gradient possible. Ramp slopes between 1V:20H (5.00%) and 1V:16H (6.25%) are preferred for easier access. Wheelchair users with disabilities affecting their arms or with low stamina have serious difficulty using inclines (ramps). Many people cannot manage a 1V:12H (8.33%) slope for a 9 m (30 ft) distance. The maximum ramp slope is 1V:12H (8.33%).

b. Maximum length of ramps between landings is dependent on the slope and horizontal projection as indicated in Table 6.1.

c. Maximum rise between landings is 760 mm (30 in).

d. Landing width must be at least as wide as the widest ramp run approaching the landing and have a minimum clear length of 1525 mm (60 in) due to a confined turning space.

e. If a ramp changes direction at a landing, the minimum landing size must be 1525 mm × 1525 mm (60 in × 60 in) due to a confined turning space.

f. Ramps must have level landings at the bottom and top of each run.

g. Circular style ramps are not recommended since they normally have non-uniform cross slopes which do not permit all wheelchair wheels to be on the ground at the same time. The lack of level landings also does not permit any resting areas for people with limited stamina.

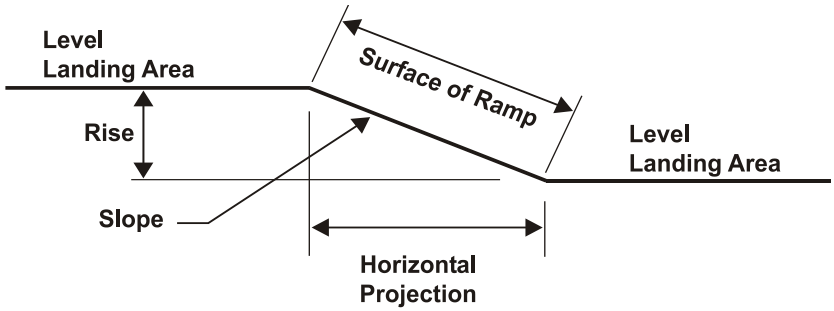

TABLE 6.1
RAMPS BETWEEN LANDING AREAS

TYPICAL RAMP DIMENSIONAL ELEMENTS BETWEEN LANDING AREAS		
SLOPE	**RISE (Maximum)**	**HORIZONTAL PROJECTION (Maximum)**
1V:12H < 1V:16H	760 mm (30 in)	9 m (30 ft)
1V:16H < 1V:20H	760 mm (30 in)	12 m (40 ft)

3. Handrails (See Figures 6.4, 6.5 and 6.6).

a. In addition to any protective railings, parapets or fencing, provide handrail on both sides of all stairways and ramp runs exceeding a 150 mm (6 in) rise or an 1830 mm (72 in) horizontal projection in order to provide support for balance and security in ascending or descending the structure.

b. Top of gripping surface for handrail must be mounted between 860 mm and 965 mm (34 in and 38 in) above the ramp surface and be parallel with the ramp or landing surface.

c. Where handrails are not required, provide a 50 mm (2 in) minimum height curb or other vertical guard to prevent drop off from ramp or landing.

d. Ends of handrail must be either rounded or returned smoothly to floor, wall or post and should not project into any walkway.

e. Clear space between handrail and wall surface must be a minimum of 38 mm (1.5 in).

f. If handrails are not continuous, they must extend at least 305 mm (12 in) beyond the top and bottom of the ramp segment.

g. Handrails must not rotate within their fittings.

h. Avoid recessed handrail locations in vertical surfaces.

i. Handrail materials should be capable of withstanding bending moments of at least 1112 N (250 lb) horizontal concentrated load. Fasteners and support mounts should withstand an 1112 N (250 lb) shear load and 1112 N (250 lb) tensile load.

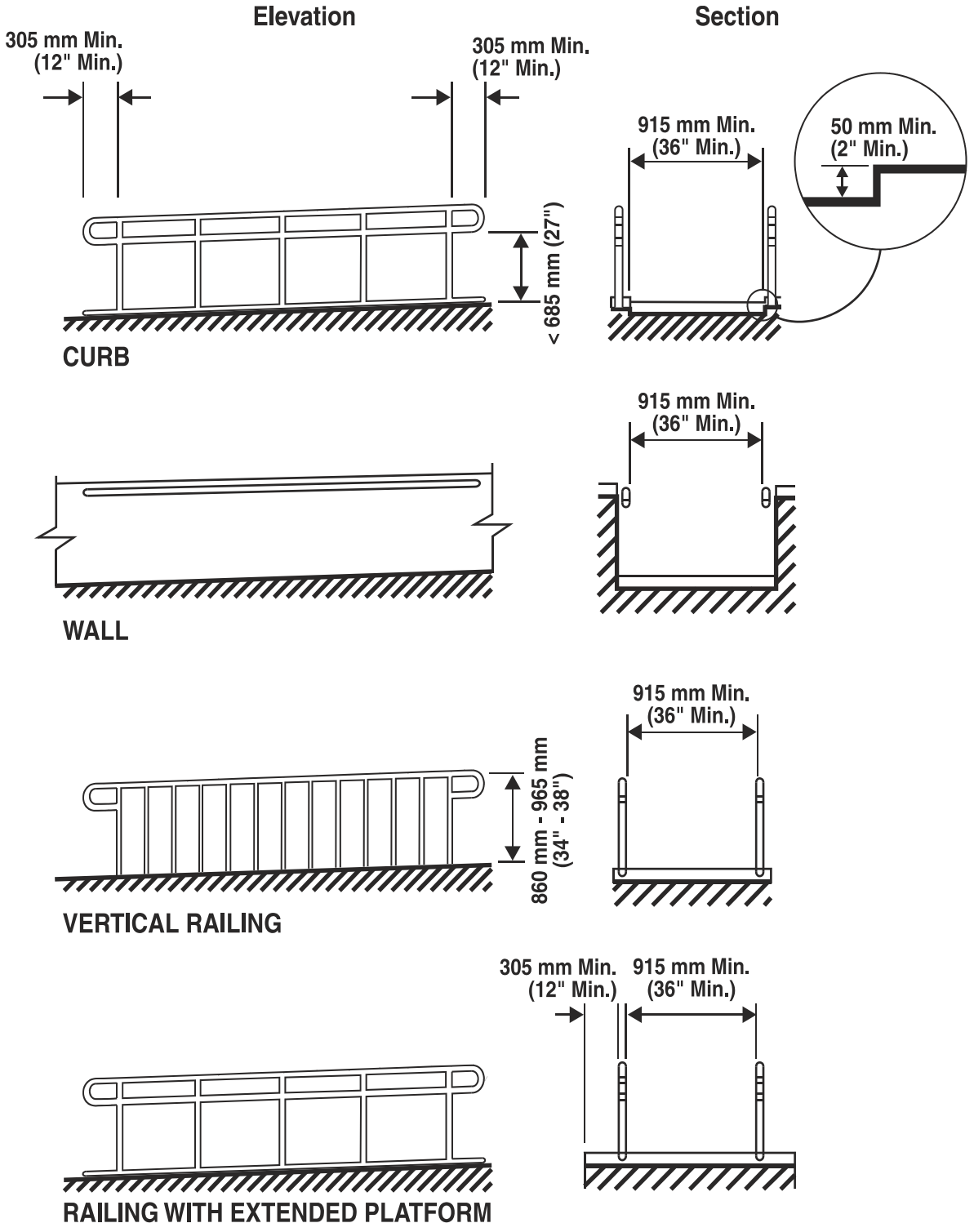

FIGURE 6.4

Examples of Edge Protection and Handrail Extensions

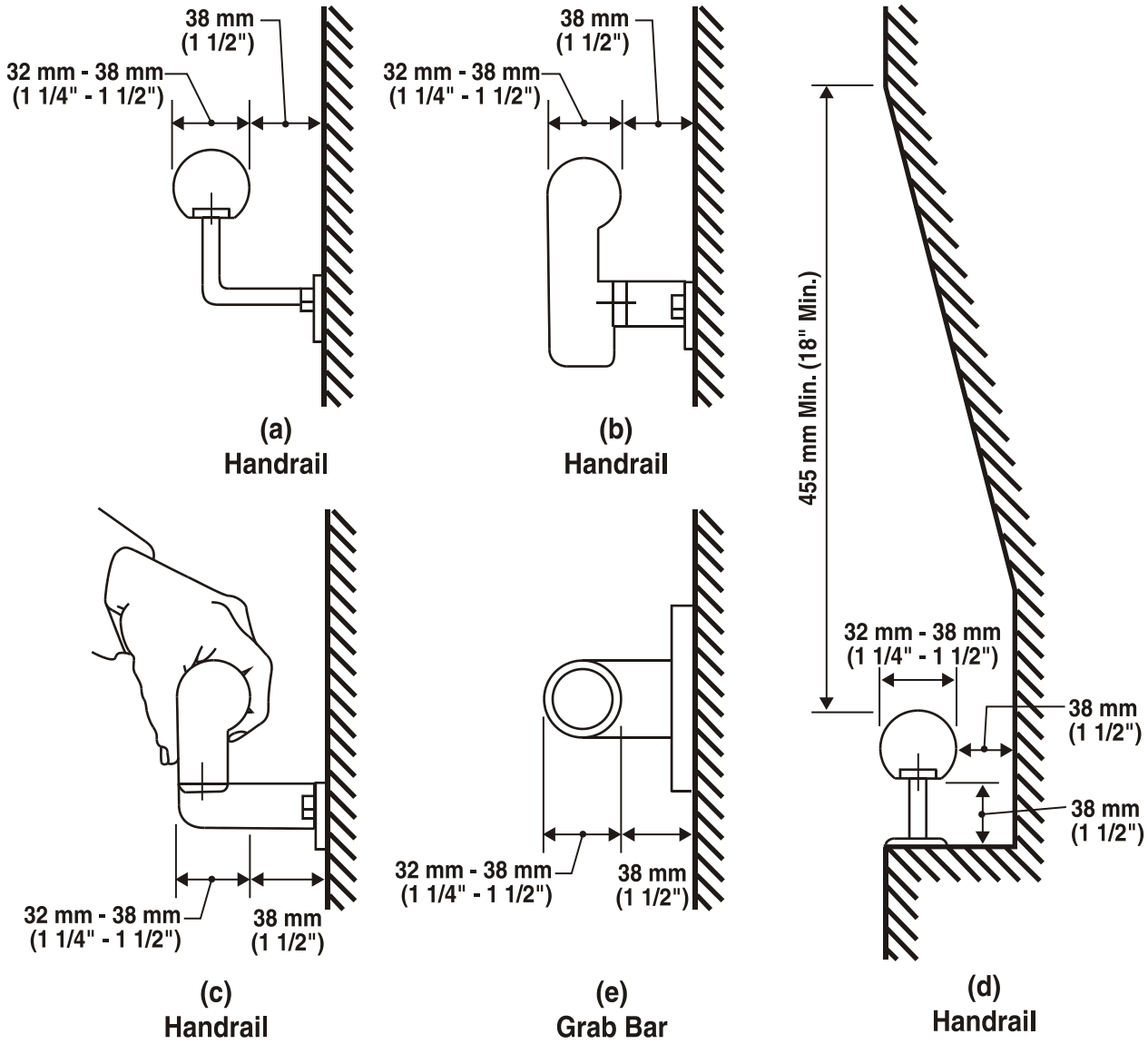

FIGURE 6.5

Size and Spacing of Handrails and Grab Bars

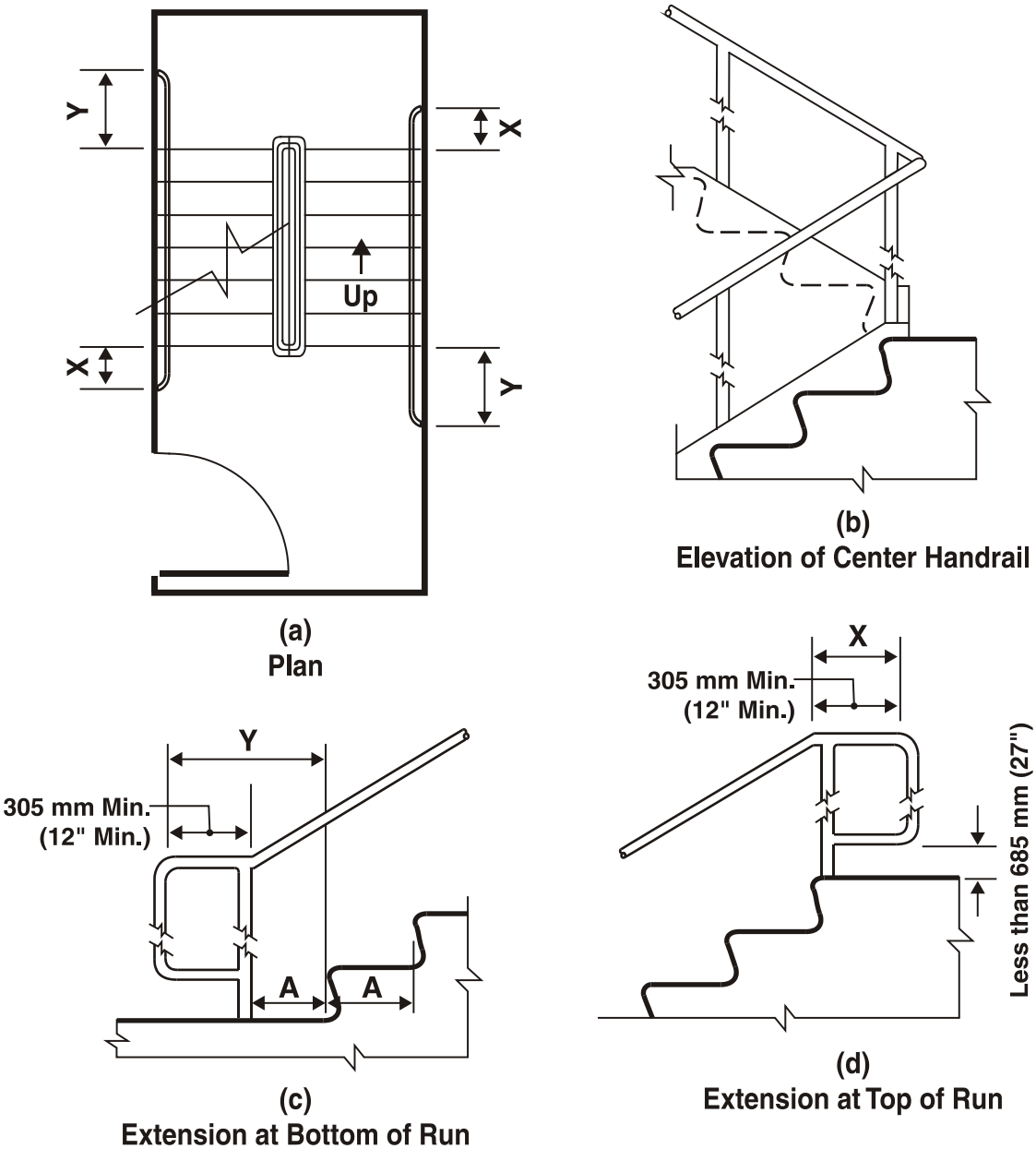

NOTE:
X is the 305 mm (12 in) minimum handrail extension required at each top riser. Y is the minimum handrail extension of 305 mm (12 in) plus the width of one tread (A) that is required at each bottom riser.

FIGURE 6.6
Stair/Step Handrails

4. Stairways (See Figures 6.6 and 6.7).

a. Maximum 180 mm (7 in) riser (R = vertical rise in millimeters (inches)), 130 mm (5 in) is preferred.

b. Tread (T = horizontal projection in millimeters (inches)) length designed to appropriate standard stair design formulas to achieve the needed slope as approved. Minimum tread width of 280 mm (11 in). A common stair design formula is 2R + T = 660 mm (26 in).

c. Use rounded tread nosing with maximum 13 mm (0.5 in) radius of curvature.

d. Provide landing for every 1525 mm to 1830 mm (60 in to 72 in) change in elevation and if possible avoid using over 10 steps or less than three steps per flight.

e. Provide handrail along both sides of the stairway.

f. Winding the stairway or reversing the stair direction alignment can reduce space requirements.

g. Pitch stairs surface so that water will not accumulate on walking surfaces. Maximum pitch is 2.00%; 1.00% pitch is recommended.

h. Do not use open tread steps or steps with projected nosings.

i. No part of a stairway should overhang a walkway at or below head height. A clear head room passageway above the walkway of 2135 mm (84 in) minimum is required.

j. Stairways that lead to a walkway should be setback from the edge of the stair nosing at least 585 mm (23 in) from the walkway at the bottom and at least 305 mm (12 in) at the top.

5. Additional Criteria. Additional design criteria for pedestrian grade separation facilities are found in the AASHTO Bridge Specifications.

6. Lighting.

a. The installation of lighting at pedestrian grade separation structures should be carefully considered.

b. Stairways which have regular use should have at least shadow lighting to indicate the beginning and end and if possible the edge of each tread.

c. The simplest lighting approach is an overhead light placed to one side on the upper height of the stairway with the luminaires directed to shine down upon the stairway. Avoid placing landscape plant material in locations where their shadows may obscure the intended light illumination on the ramp or stairway.

d. An illumination guideline for ramps or stairways is to provide a minimum average of 22 lx (2.0 footcandles) of light on the intended surface.

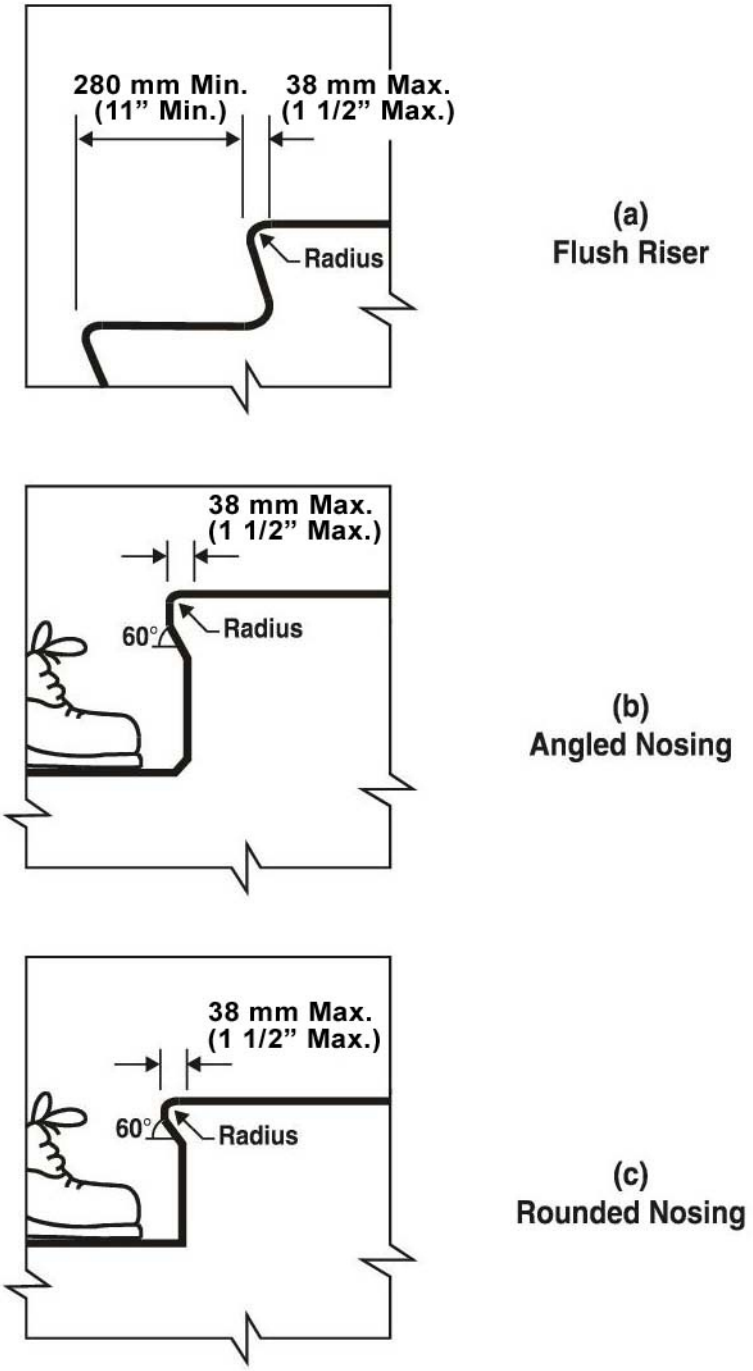

FIGURE 6.7
Usable Tread Width and Examples of Acceptable Nosings

6.9 CURB RAMP DESIGN CONSIDERATIONS

A. Existing Conditions. Curb ramps are constructed to permit people in wheelchairs to cross a curb with ease. Design of curb ramps may vary in relation to the following existing conditions:

1. Sidewalk width.
2. Sidewalk location with respect to the back face of curb.
3. Height and width of curb cross section.
4. Design turning radius and length of curve along the curb face.
5. Angle of street intersection(s).
6. Planned or existing location of sign and signal control devices.
7. Stormwater inlets and public surface utilities.
8. Possible sight obstructions.
9. Street width.
10. Other physical obstructions such as buildings, bridges and walls.
11. Roadway grade.
12. Parking spaces.

The ADA Law, 28 CFR Part 35.151(e) - New construction or alterations provides the general direction for the placement of curb ramps: (1) Newly constructed or altered streets, roads and highways must contain curb ramps or other sloped areas at any intersection having curbs or other barriers to entry from a street level pedestrian walkway. (2) Newly constructed or altered street level pedestrian walkways must contain curb ramps or other sloped areas at intersections to streets, roads, or highways.

Resurfacing projects and "curb ramp only" projects do not typically include changes to roadway geometry, including roadway profile grade. When the roadway profile grade exceeds 2%, and profile adjustments are not in the scope of work, the depressed curb must be constructed to match the roadway profile and the curb ramp cross slope will transition to meet the roadway profile grade as gradually as possible, but not to exceed a rate of change of 3% per LF. In normal crown sections, stormwater flow must be maintained along the curb line and the roadway should not be adjusted in any way that would alter the flow line. Transitioning the curb ramp cross slope to the roadway profile allows the pedestrian to adjust to the cross slope of the crosswalk in the safety of the area behind the curb and does not push stormwater into the vehicular path. Curb ramps and the flared sides of curb ramps shall be located so that they do not project into vehicular traffic lanes, parking spaces, or parking access aisles.

B. General Considerations. All curb and sidewalk areas being constructed or reconstructed in the Commonwealth must provide curb ramps for persons with physical disabilities as shown in Publication 72M, *Roadway Construction Standards*. The following must be considered in the design of curb ramps.

1. A curb ramp must be provided at locations that meet the criteria of the referenced ADA Law, Part 28 CFR Part 35.151(e).

2. All slopes are measured with respect to a level plane. The upward pitch (slope) of a road profile or sidewalk away from the curb will effectively increase the total height to be negotiated by the curb ramp.

3. Crosswalk markings serve primarily to guide pedestrians across roadways in the proper path and also to warn the motorist of a pedestrian crossing point.

4. Curb ramps should be wholly contained within marked pedestrian crosswalks (excluding flared sides for non-diagonal curb ramps) to keep crosswalk widths to a minimum and to enable ramp use to be incorporated as part of the established pedestrian control at the intersection.

5. Separate curb ramps to provide space for curb ramp flares and landing areas. Moving the curb ramp to the side may increase the width of the crosswalk. See Figure 6.8.

6. Curb ramps are not limited to intersections and marked crosswalks but should also be considered at other appropriate points of pedestrian concentration or access such as refuge medians/islands, mid-block crossings, parking areas and other traffic separation islands. At uncontrolled pedestrian crossings, a warrant analysis may

be required to evaluate pedestrian needs and safety. Access may also be provided at raised median, refuge and other traffic islands by providing a level street elevation crossing cut through the island. Islands or medians to be accessed by curb ramps on each side should be wide enough to have a minimum 1220 mm (48 in) level [1V:50H (2.00%)] surface between the curb ramps.

7. Adequate visibility is required to ensure safe pedestrian movement. A sight distance study is recommended to ensure that curb ramps are not placed at locations where motorists cannot see the low profile of people using wheelchairs. Vehicle parking must be eliminated at least 6.0 m (20 ft) from the inside pedestrian crosswalk line at intersections. Parking may also be eliminated at midblock crossings to provide access from the curb ramp and to increase the visibility of the pedestrian. See Chapter 6, Appendix F for standard letters.

8. Built-up curb ramps are not permitted in new construction and their use must be carefully evaluated in any alteration work location. Built-up curb ramps should not project into any vehicular traffic lane, parking space or access aisle. Built-up curb ramps are best utilized in parking lots or locations removed from vehicular traffic or major curb drainage flows. Snow removal considerations around these ramp projections must also be evaluated when considering the use of a built-up curb ramp.

9. Mountable curbs are not suitable for pedestrian access unless their design conforms to the curb ramp design criteria. Plain concrete gutter should not be used where curb ramps are proposed.

10. Raised median islands in crossing locations should not be less than 1220 mm (48 in) deep for cut through street level access openings. To allow for attendant assisted wheelchairs, 1830 mm (72 in) is required.

11. Curb ramps serving adjoining crosswalks should not be located too close to each other in order to avoid excessive undulating pavement surfaces which can be uncomfortable to walk on or become unsafe for pedestrians. See Figure 6.8 for the preferred design and Figure 6.9 for the non-desirable design. This situation often occurs at intersections having a curb radius less than 4.5 m (15 ft). As a last resort a continuous, wide, diagonal curb ramp may be considered in this situation for alteration work but is not permitted in new construction. Note: Diagonal curb ramps provide less pedestrian protection from turning vehicles and require ADE of Design approval.

12. If a curb ramp or other ADA accessibility feature cannot be designed to the appropriate standards, then a Technically Infeasible Form must be prepared describing the existing site constraints, design alternatives evaluated and the design alternative selected to provide access to the maximum extent feasible. The form must be reviewed, approved by the ADE of Design or delegate and placed in the project design document file.

13. Curb ramps must be oriented in such a fashion that the grade break is approachable by a pedestrian in a wheelchair. This can be accomplished by installing the curb ramp perpendicular to the curb. This allows for a wheelchair to make contact with both wheels before experiencing a change in grade. This may cause the curb ramp to not be in alignment with the crossing direction. The curb ramp may be installed in the same direction as the crossing and not perpendicular to the curb when a triangular landing is provided. This provides non-visual cues for pedestrians with visual disabilities. The triangular landing must be approximately level [1V:50H (2.00%)]. See Figure 6.11.

14. Narrow sidewalks may not provide the necessary space to install perpendicular curb ramps. A different curb ramp type such a Type 2 or Type 6 curb ramp must be considered. See Figure 6.12.

15. Where a pedestrian circulation path crosses the curb ramp, flared sides shall be sloped 10 percent maximum, measured parallel to the curb line. The use of steeper flares is acceptable provided they are protected from pedestrian traffic. See Figure 6.13.

16. Excessively steep curb ramps may deny access and must be reconstructed with an appropriate slope or be replaced by a different type of curb ramp. See Figure 6.14.

17. Vertical drops or lips located within the PAR may cause a pedestrian to trip or deny access to a pedestrian using a wheelchair. Curbed flares must be located outside of the pedestrian access route. A non-walk surface such as grass limits the PAR and will allow the installation of a curbed flare. See Figure 6.15.

18. Sidewalks, curb ramps and roadway drainage features must be designed and constructed to prevent surface drainage from ponding at the bottom of the curb ramp. Edge of road elevations at the flow line must be graded to ensure positive drainage. For new construction, additional inlets may be required to prevent drainage issues. See Figure 6.16.

19. In all cases, the designer must attempt to design using the smallest possible corner turning radius to improve overall intersection efficiency. The use of small turning radii provides many improvements such as:

Motor vehicle traffic must slow to make a turn, making it safer for pedestrians. Less head turning is required of motor vehicle drivers because they approach the intersection at closer to right angles. Crosswalks are shorter (sometime as much as 50% shorter), which decreases pedestrian crossing time, thus decreasing pedestrian green time. This is very important to persons who use walkers, canes, or otherwise have a slower crossing speed. Longer crossing distances may intimidate them into not even using the intersection. Crosswalks are closer to the intersection, improving overall sight distance. More sidewalk space is provided for pedestrians. Curb ramps can be built perpendicular to the crosswalks, enabling persons with visual disabilities to more easily navigate the intersection. Smaller radii greatly reduce the need for diagonal curb ramps. Long wheelbase vehicles may find it more difficult to turn. However, this can be addressed by pulling back the stop bar in the receiving street. If this involves a multi-lane street, pulling back the stop bar also improves safety and reduces motor vehicle/pedestrian crashes.

20. Diagonal curb ramps should be avoided. They offer limited guidance to the location of the crosswalk to pedestrians with visual disabilities.

21. The use of sidewalk bulb-outs should be considered where applicable to reduce crosswalk length and provide needed space to install curb ramps.

22. People with visual impairments often have difficulty using curb ramps since the curb ramp makes locating the edge of the street more difficult and the ramps and side flare surfaces may be more difficult to walk across. See Figure 6.17. Where possible, the curb ramps should be separated as far as possible but parallel to the direct line of pedestrian movement. See Figure 6.8.

23. The appropriate level of detail must be provided on the plans to ensure compliant construction. See Figure 6.18 for an overview of required details.

C. New Construction. The guidelines presented in this Chapter will apply to new construction unless specifically noted for alteration work only.

D. Alterations. The following should be considered for curb ramps in alteration projects.

1. Designing curb ramps for alteration projects will generally be more difficult than for new construction projects because existing conditions such as buildings, walls, sidewalk gradients, right-of-way width, etc. may limit the space available to provide the required accessibility. Specific curb ramp locations should be adapted to existing site conditions.

2. Curb ramps may necessitate the relocation of various existing features such as street signs, mailboxes, telephone booths, newspaper dispensers or other obstacles interfering with the desired accessibility. Relocating major utility conflicts such as fire hydrants, light poles, utility poles and drainage inlets should be assessed on a case by case basis.

3. Although existing conditions may dictate that pedestrian crosswalks be prohibited at an intersection, this restriction could possibly change at some time in the future. Appropriate measures, such as signal pole location

and placement of other utilities, should be taken to allow for future curb ramps. Curb ramp design is dependent on many factors; therefore, depressed curbs will not be installed for future curb ramp locations.

4. In general, when an existing space in the highway right-of-way is to be altered, each element in the space within the project scope or limits must comply with applicable requirements for new construction to the maximum extent feasible.

5. Alteration projects must not decrease or have the effect of decreasing the accessibility of a facility or a pedestrian circulation route below the requirements for new construction in effect at the time of the alteration. However, where the nature of the existing facility to be altered makes it technically infeasible to meet PennDOT's standards through the planned alteration, the maximum access feasible must be provided. For example, for an overlay project, an existing curb ramp must be upgraded and as a result the sidewalk must be closed. The alternate route is a sub-standard width sidewalk that cannot be expanded due to limited right-of-way. Other alternatives evaluated did not provide a greater level of access than the sub-standard width sidewalk. In this case it is technically infeasible to provide access fully meeting the standards during construction; however, access is provided to the maximum extent feasible given the situation.

6. An alteration of an existing facility must not impose a requirement for accessibility greater than required for new construction.

7. Alteration projects will not be required to expand a planned scope of work to include other items of accessibility. The scope of alteration work includes only the work included in the limits, boundaries, or scope of a planned project with no obligation to expand the scope or limits of a project to include other work or adjacent areas.

8. Existing project site conditions may limit accessibility design choices and should be identified early in the project scope. Depending on project scope, alteration projects may not require obtaining additional right-of-way. Alterations do not require narrowing roadway widths to comply with the design standards.

9. Newly issued accessibility guidelines <u>will not</u> require the need to upgrade existing accessibility facilities in the highway right-of-way at the time of the new guideline issuance if the accessibility facilities were constructed using previously approved accessibility standards. However, construction upgrades to the new standards <u>will</u> apply when the existing pedestrian route or facility is to be altered as part of a new planned project improvement to the roadway.

10. Alteration projects that include the installation of or relocation of telephone/utility poles, posts, street trees, fire hydrants, or other types of street furniture on or near existing pedestrian pathways will provide the required accessibility clearances designated for a pedestrian access route.

11. Any temporary construction activities required for alterations that affect existing pedestrian circulation paths will require the provision of a safe, alternate and accessible pedestrian route around the construction activities. The alternate route must comply with all applicable design guidelines to the maximum extent feasible so that the usability of the accessible route is maintained. The alternate route will be kept in place through the duration of the construction activity. See Section 6.14, Temporary Alternate Circulation Paths at Construction Sites.

E. Ramp Types. Curb ramp design criteria can be adapted to provide various configurations which may allow curb ramp installations in limited space conditions. See Figure 6.10 for adaptive curb ramp installations. Publication 72M, *Roadway Construction Standards*, RC-67M provides construction details for several curb ramp types that can be adapted to both new construction and alterations.

1. Type 1. The Type 1 curb ramp consists of a curb ramp and level landing for turning maneuvers at the top of the ramp. This curb ramp is ideal for locations where the existing sidewalk width is wide, provides a consistent path and allows the pedestrian to bypass the curb ramp when continuing on the sidewalk. The steeper ramp slope at the depressed curb provides better drainage than other curb ramps. The drawback of this curb ramp is the relatively wider required sidewalk width needed to install the curb ramp.

2. Type 2. The Type 2 curb ramp contains two ramps and a level landing at the roadway elevation. This curb ramp can be used on narrow sidewalks. Drawbacks include a flat slope at the depressed curb and pedestrians must traverse the curb ramps whether or not they desire to cross the street.

3. Type 3. The Type 3 curb ramp consists of a ramp that brings the street up to the top of the normal or non-depressed curb. Type 3 curb ramps can be used in situations where there is insufficient or no area available beyond the curb for other types of curb ramps. Type 3 curb ramps may not be used in locations where the ramp will project into vehicle traffic lanes, parking spaces, access aisles or interfere with curb drainage flows or snow removal operations. Type 3 curb ramps are not permitted in new construction. Negatives include pedestrians with visual disabilities may be confused by the detectable warning surface on the sidewalk and possible damage during snow removal operations.

4. Type 4 and Type 4A. Type 4 and Type 4A curb ramps are similar to a Type 1 curb ramp but utilize a curb or a steep flare slope that is placed outside of the path of the pedestrian. A non-walk surface or permanent barrier must deter or protect the pedestrian from crossing the unexpected vertical drop of the curb or steep flare slope. These curb ramps provide flares that may be installed where utilities limit the installation of flatter slopes. Depending on turning maneuvers, a landing may still be required.

5. Type 6. The Type 6 curb ramp is a combination ramp that utilizes a ramp from the street leading to a landing where the pedestrian can access both left and right directions for a total of three ramps. A plain cement concrete curb cheek wall is necessary to fit the curb ramp into the adjacent ground surface. This curb ramp is ideal in residential areas where a green/planted strip separates the sidewalk from the curb. Drawbacks include the pedestrian must traverse the ramps when continuing on the sidewalk and the additional form work to construct.

6. Blended Transition. The blended transition pedestrian walkway is not considered a curb ramp since all surfaces slopes are less than 1V:20H (5.00%) gradient. This flat pedestrian transition connection to the level of the roadway is good for wheelchair users, but is less desirable for persons with visual impairments since locating the edge of the roadway is more difficult and less protection from turning vehicles is provided. Guidelines in Figure 6.17 must be followed when considering this type of pedestrian walkway.

7. Median or Refuge Island Access Openings. These openings provide access through a median or refuge island where there is need for pedestrians to walk across the median or island. The Type B detail indicates a sloped flare side to connect to the adjacent ground surface, but this flare is not designed to be an accessible slope. The median opening is only intended for narrow openings. If drainage flows through the opening, debris will collect on the truncated domes.

8. Ramped Medians or Islands. This design places back to back curb ramps separated by a landing area. The landing area is intended to provide pedestrians a resting area. The ramps as compared to an access opening will not allow drainage to flow directly through the median and thus prevents debris collection. This design is difficult to use since the median width must be wide enough to install the ramps and landing area.

F. Non-standard Curb Ramps. When a standard curb ramp cannot be installed due to existing conditions, a non-standard curb ramp may be needed. Non-standard curb ramps must meet the curb ramp design criteria. See Section 6.11, Curb Ramp Design Criteria. When a non-standard curb ramp is used, appropriate detail must be included in the construction plans.

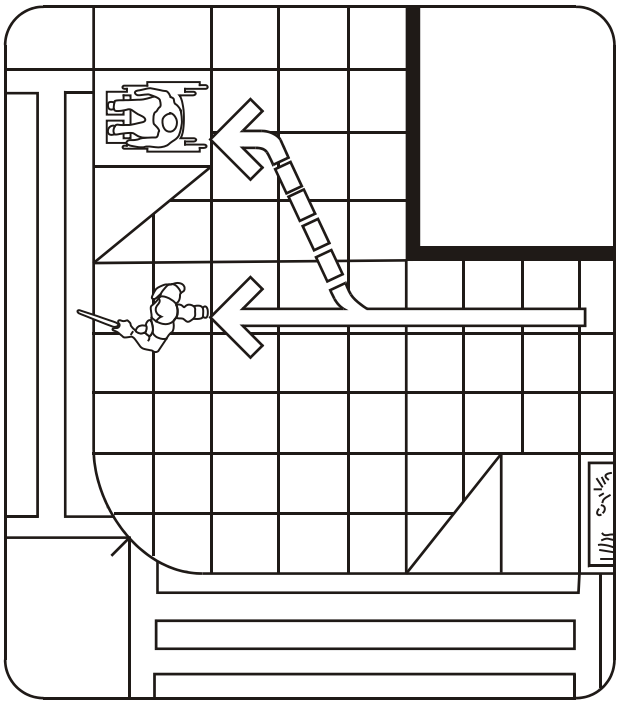

Note: Curb ramp located to the side, away from direct line of pedestrian movement.

FIGURE 6.8
Curb Ramps at Marked Crosswalks

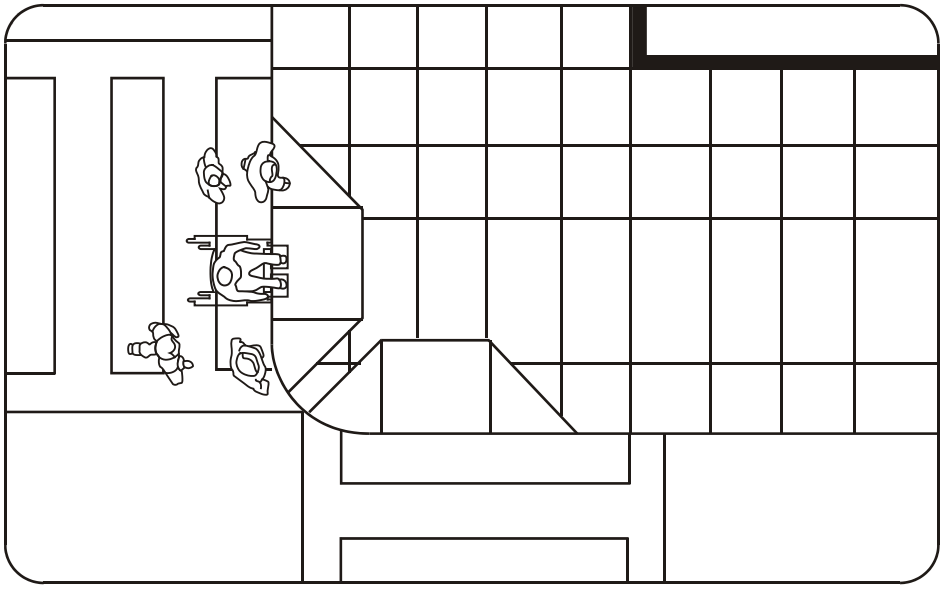

Note: Avoid locating curb ramps too close together.

FIGURE 6.9
Curb Ramps at Marked Crosswalks

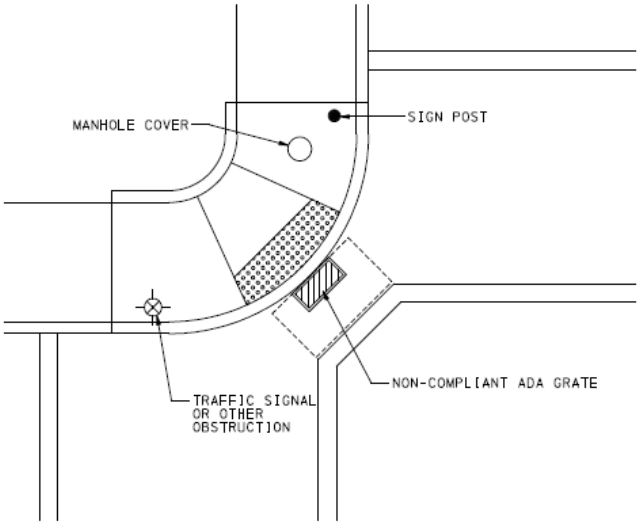

POTENTIAL SOLUTIONS:
FOR ALTERATIONS: UTILITIES IN THE PATH OF TRAVEL ARE ACCEPTABLE IF A 4'-0" PEDESTRIAN PATH IS MAINTAINED, THE TOP SURFACE IS FLUSH (LESS THAN 1/4" IN ELEVATION DIFFERENCE), FIRM, STABLE AND SLIP RESISTANT. INLET GRATES MUST HAVE OPENINGS NO GREATER THAN 1/2" IN DIRECTION OF TRAVEL.

FOR NEW CONSTRUCTION: IF FEASIBLE LOCATE THE CURB RAMPS SO THAT THE UTILITIES ARE NOT IN THE PEDESTRIAN PATH OF TRAVEL.

REPLACE EXISTING GRATE WITH A GRATE WITH AN OPENING LESS THAN 1/2" IN DIRECTION OF TRAVEL. THE REPLACEMENT GRATE CAN NOT AFFECT INLET CAPACITY.

RECONFIGURE RAMPS TO UTILIZE TWO RAMPS AND AVOID EXISTING GRATE.

IF THE UTILITY AND ADJACENT SURFACE ELEVATION DIFFERENCE IS GREATER THAN 1/4", ADJUST UTILITY TO REMOVE GRADE DIFFERENCE.

POTENTIAL PROBLEM
UTILITIES IN PEDESTRIAN PATH

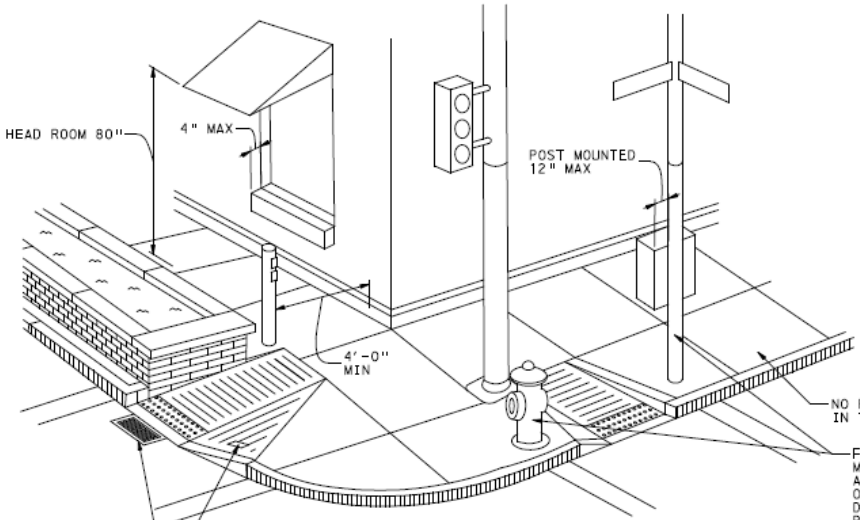

FIRE HYDRANT AND STREET SIGN MAKE THE AJOINING SIDEWALK A NON-WALK SURFACE. IF THE OBSTRUCTIONS WERE RELOCATED, DUE TO PEDESTRIAN TRAFFIC THE RAMP FLARES WOULD REQUIRE A TRAVERSABLE (10:1 MAX) SLOPE.

FOR ALTERATIONS: UTILITIES IN THE PATH OF TRAVEL ARE ACCEPTABLE IF THE TOP SURFACE IS FLUSH, FIRM, STABLE AND SLIP RESISTANT. INLET GRATES MUST HAVE OPENINGS NO GREATER THAN 1/2" IN DIRECTION OF TRAVEL.

NEW CONSTRUCTION: AT CURB RAMPS, LOCATE UTILITIES SO THAT THEY ARE NOT IN THE PEDESTRIAN PATH OF TRAVEL.

* OBJECTS PROJECTING FROM WALLS (FOR EXAMPLE, TELEPHONES) WITH THEIR LEADING EDGES BETWEEN 27" AND 80" ABOVE THE FINISHED SURFACE SHALL PROTRUDE NO MORE THAN 4" INTO PEDESTRIAN WALKWAYS.

** OBJECTS MOUNTED WITH THEIR LEADING EDGES AT OR BELOW 27" ABOVE THE FINISHED SURFACE MAY PROTRUDE ANY AMOUNT.

*** OBJECTS MOUNTED ON POSTS OR PYLONS: OVERHANG 12" MAXIMUM FROM 27" TO 80" ABOVE THE GROUND OR FINISHED SURFACE.

**** PROTRUDING OBJECTS SHALL NOT REDUCE THE CLEAR WIDTH OF AN ACCESSIBLE ROUTE OR MANEUVERING SPACE.

UTILITIES AND
VERTICAL OBSTRUCTIONS
AT CURB RAMPS

FIGURE 6.10
Design Considerations: Utilities in Path of Travel

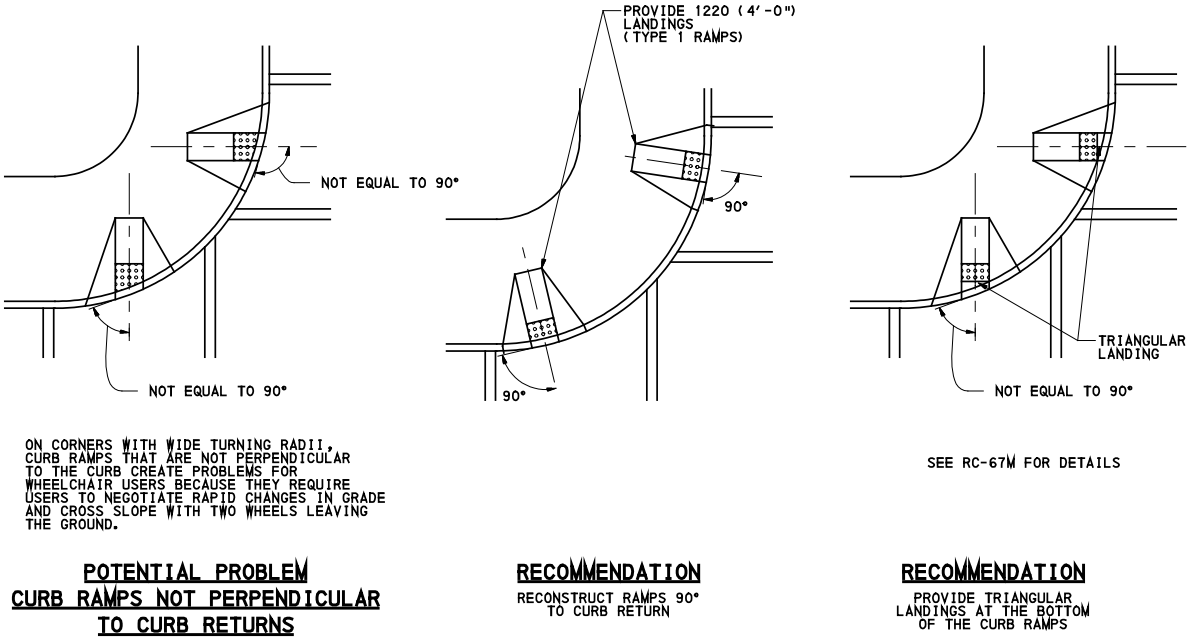

FIGURE 6.11

Design Considerations: Non-Perpendicular Type 1 Curb Ramps

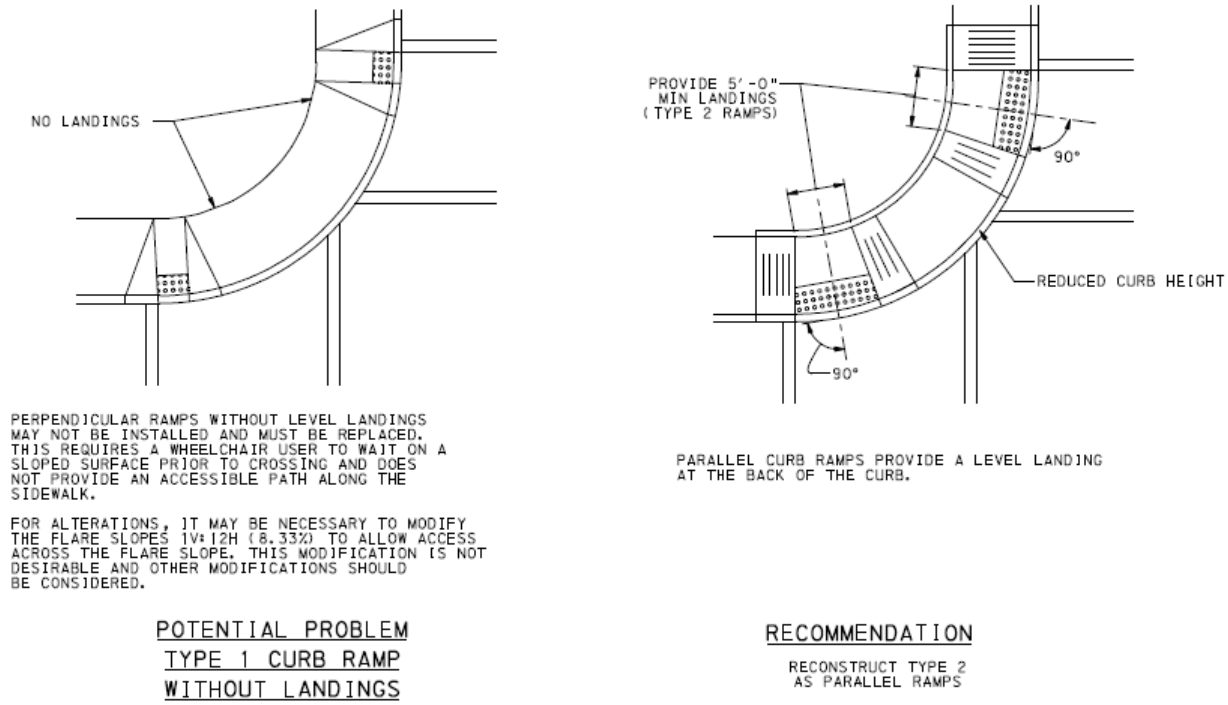

FIGURE 6.12

Design Considerations: Type 1 Curb Ramps Without Landings

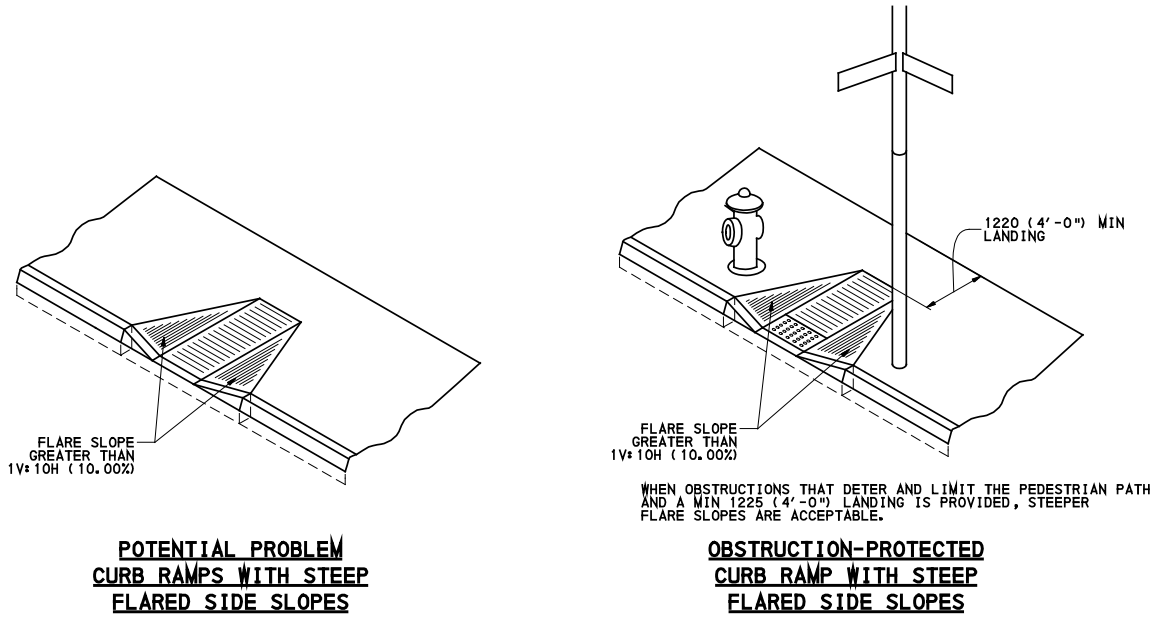

FIGURE 6.13
Design Considerations: Steep Flares in PAR

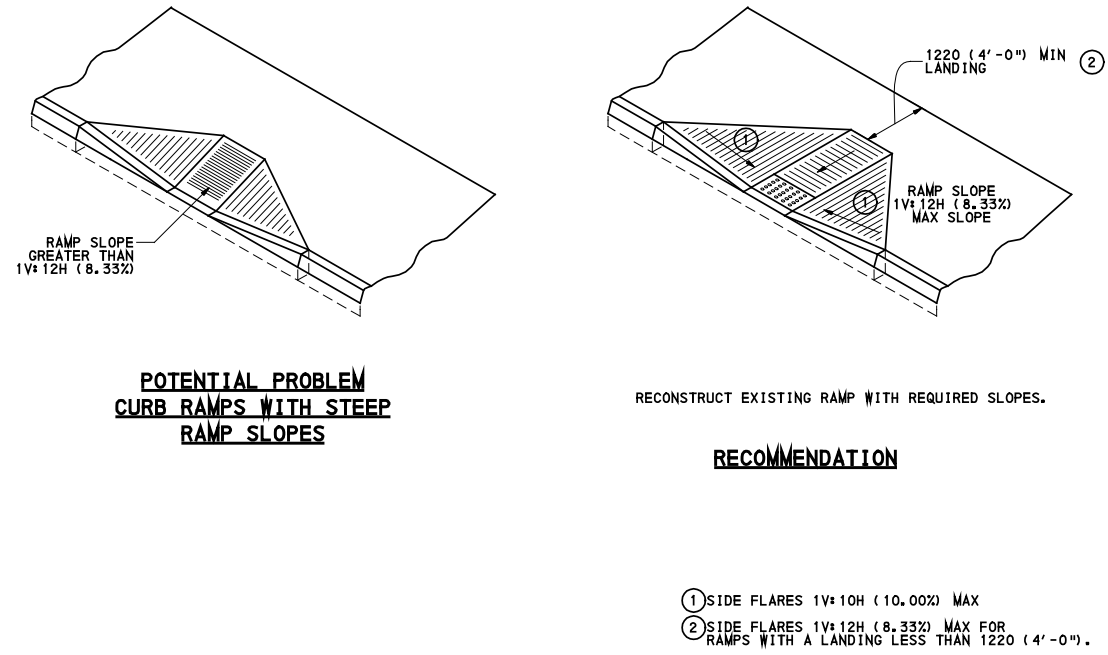

FIGURE 6.14
Design Considerations: Steep Curb Ramps

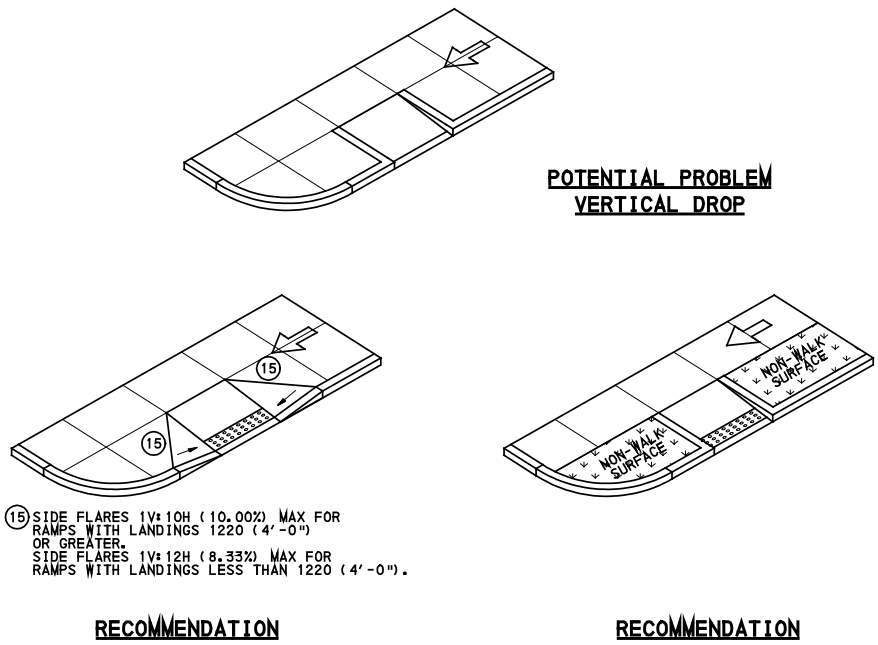

FIGURE 6.15
Design Considerations: Vertical Drops in PAR

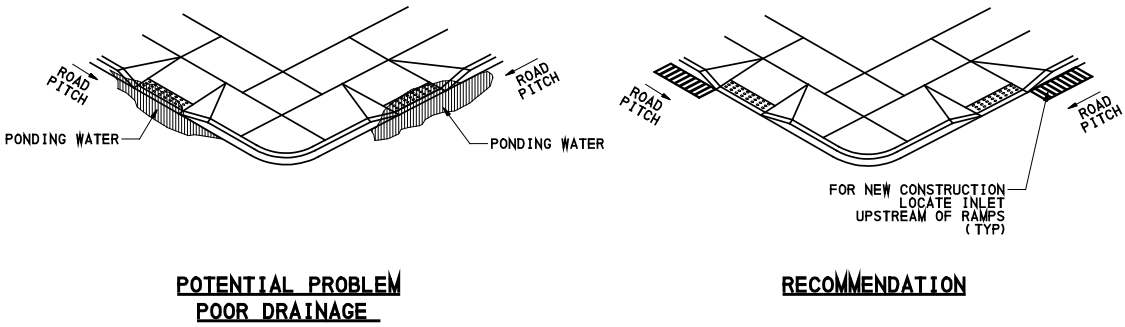

FIGURE 6.16
Design Considerations: Ponding at Curb Ramps

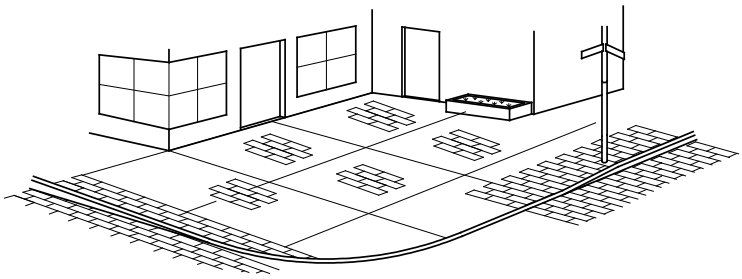

DECORATIVE PATTERNS USED AT DEPRESSED CURBS, SUCH AS BRICK PATTERN, CREATE A CONTINUOUS PATHWAY. PEOPLE WITH VISION AND COGNITIVE IMPAIRMENTS HAVE DIFFICULTY DETECTING WHERE THE STREET BEGINS AND ENDS.

POTENTIAL PROBLEM
LARGE BLENDED TRANSITIONS

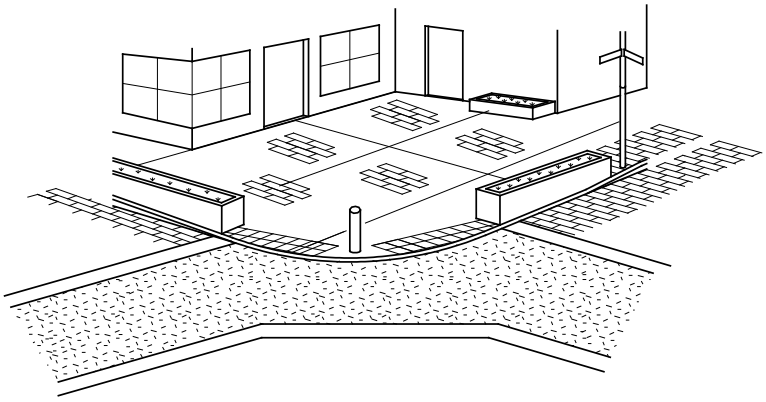

DETECTABLE WARNING SURFACES, CONTRASTING SURFACE MATERIALS, AND BARRIER POSTS ARE MEASURES THAT CAN BE UTILIZED TO CONVEY THE TRANSITION BETWEEN STREET AND SIDEWALK AT DEPRESSED CORNERS. THIS CORNER WOULD BE A GOOD LOCATION FOR ACCESSIBLE SIGNALS.

RECOMMENDATION

FIGURE 6.17
Design Considerations: Depressed Curb and Blended Transitions

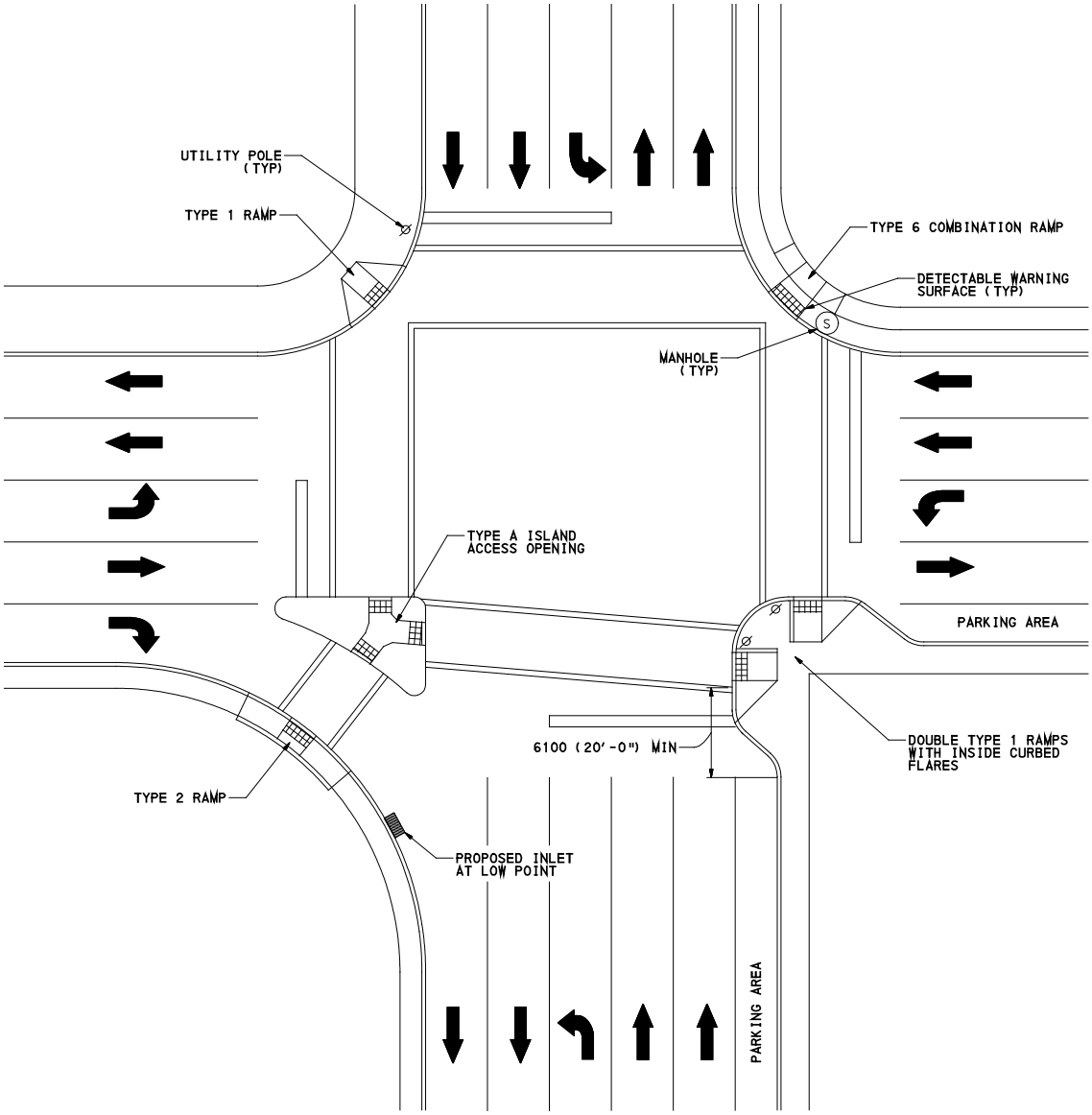

DESIGN CONSIDERATIONS:

LOCATIONS OF DRAINAGE, UTILITY OR OTHER POSSIBLE OBSTRUCTIONS.
LOCATIONS OF PEDESTRIAN PUSH BUTTONS.
CROSSWALK LOCATIONS CLEARLY AND ACCURATELY SHOWN.
LOCATIONS OF LOWPOINTS AND FLOW LINE ELEVATIONS.
CURB RAMPS LEAD TO A 1220 (4'-0") MIN ACCESSIBLE PATH WITH A MAX 2.00% CROSS SLOPE.
CURB RAMP AND FLARE SLOPES CALCULATED BASED ON ROAD PITCH AND RECOMMENDED SLOPES.
DOCUMENTATION OF NOT MEETING DESIGN REQUIREMENTS IF NOT TECHNICALLY FEASIBLE.

LEVEL OF DETAIL:

CURB RAMP AND FLARE EDGES ACUURATELY SHOWN.
DETECTABLE WARNING SURFACE CLEARLY AND ACCURATELY SHOWN.
CURB RAMP LOCATIONS AND TYPES CLEARLY IDENTIFIED.

FIGURE 6.18
Design Considerations:
Plan Details

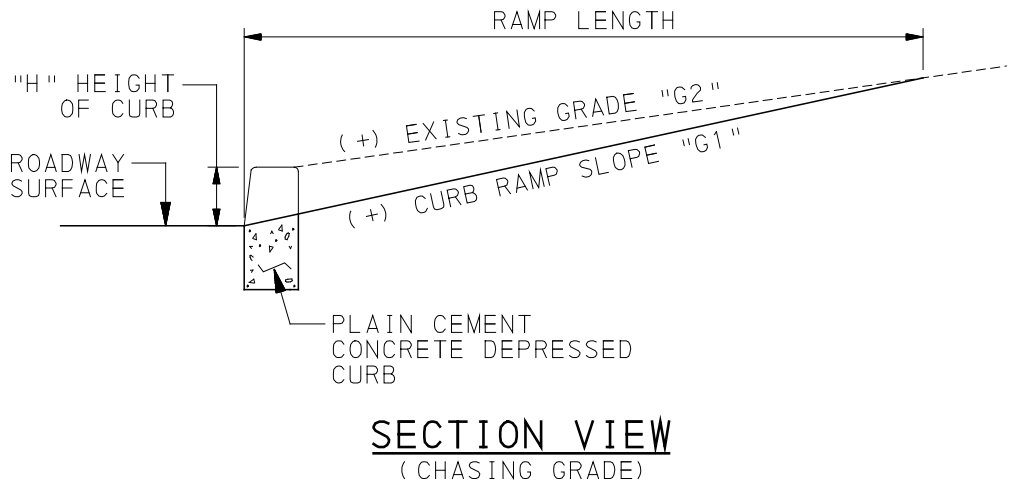

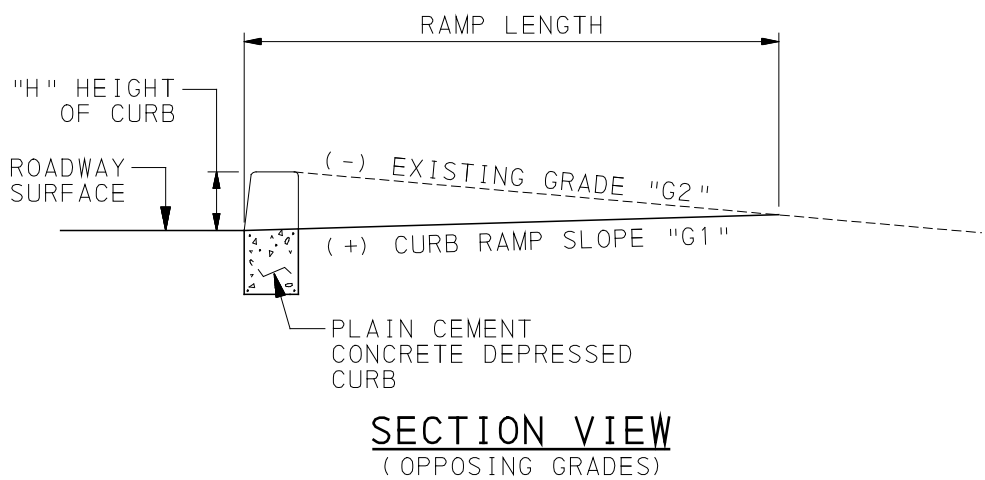

To calculate ramp length:
"G1" Proposed Curb Ramp Slope (%)
"G2" Existing Grade (%)
"H" Height of Curb (ft)

$$\text{Ramp Length (ft)} = \frac{H}{(G1 - G2)/100}$$

Example #1 $\frac{0.67}{(5 - -3)}$ = 8.4' Example #2 $\frac{0.5}{(5-2)/100}$ = 16.7' Use Steeper Slope

FIGURE 6.19

Design Considerations: Ramp and Flare Calculations

APPROXIMATE RAMP LENGTH (MM) "G1" 5% SLOPE														
		"H" CURB HEIGHT (MM)												
"G2" EXISTING GRADE (%)			25	50	75	100	125	150	175	200	225	250	275	300
	CHASING GRADE	12	n/a	n/a	n/a	n/a	n/a	n/a	n/a	n/a	n/a	n/a	n/a	n/a
		11	n/a	n/a	n/a	n/a	n/a	n/a	n/a	n/a	n/a	n/a	n/a	n/a
		10	n/a	n/a	n/a	n/a	n/a	n/a	n/a	n/a	n/a	n/a	n/a	n/a
		9	n/a	n/a	n/a	n/a	n/a	n/a	n/a	n/a	n/a	n/a	n/a	n/a
		8	n/a	n/a	n/a	n/a	n/a	n/a	n/a	n/a	n/a	n/a	n/a	n/a
		7	n/a	n/a	n/a	n/a	n/a	n/a	n/a	n/a	n/a	n/a	n/a	n/a
		6	n/a	n/a	n/a	n/a	n/a	n/a	n/a	n/a	n/a	n/a	n/a	n/a
		5	n/a	n/a	n/a	n/a	n/a	n/a	n/a	n/a	n/a	n/a	n/a	n/a
		4	2500	n/a	n/a	n/a	n/a	n/a	n/a	n/a	n/a	n/a	n/a	n/a
		3	1250	2500	3750	n/a	n/a	n/a	n/a	n/a	n/a	n/a	n/a	n/a
		2	834	1667	2500	3334	4167	n/a	n/a	n/a	n/a	n/a	n/a	n/a
		1	625	1250	1875	2500	3125	3750	4375	n/a	n/a	n/a	n/a	n/a
		0	500	1000	1500	2000	2500	3000	3500	4000	4500	n/a	n/a	n/a
	OPPOSING GRADE	-1	417	834	1250	1667	2084	2500	2917	3334	3750	4167	n/a	n/a
		-2	358	715	1072	1429	1786	2143	2500	2858	3215	3572	3929	4286
		-3	313	625	938	1250	1563	1875	2188	2500	2813	3125	3438	3750
		-4	278	556	834	1112	1389	1667	1945	2223	2500	2778	3056	3334
		-5	250	500	750	1000	1250	1500	1750	2000	2250	2500	2750	3000
		-6	228	455	682	910	1137	1364	1591	1819	2046	2273	2500	2728
		-7	209	417	625	834	1042	1250	1459	1667	1875	2084	2292	2500
		-8	193	385	577	770	962	1154	1347	1539	1731	1924	2116	2308
		-9	179	358	536	715	893	1072	1250	1429	1608	1786	1965	2143
		-10	167	334	500	667	834	1000	1167	1334	1500	1667	1834	2000
		-11	157	313	469	625	782	938	1094	1250	1407	1563	1719	1875
		-12	148	295	442	589	736	883	1030	1177	1324	1471	1618	1765

Use the above chart to determine the approximate ramp length.

Step 1: Find the appropriate curb height along the top row.

Step 2: Follow the curb height down to the existing grade slope.

Step 3: The intersecting value is the approximate ramp length at the given slope.

Step 4: "n/a" indicates that a steeper slope must be used. The current slope produces a ramp length greater than 4500 mm.

FIGURE 6.20 (METRIC)

Design Considerations: Ramp and Flare Length Charts

APPROXIMATE RAMP LENGTH (MM) "G1" 6% SLOPE														
		"H" CURB HEIGHT (MM)												
"G2" EXISTING GRADE (%)			25	50	75	100	125	150	175	200	225	250	275	300
	CHASING GRADE	12	n/a	n/a	n/a	n/a	n/a	n/a	n/a	n/a	n/a	n/a	n/a	n/a
		11	n/a	n/a	n/a	n/a	n/a	n/a	n/a	n/a	n/a	n/a	n/a	n/a
		10	n/a	n/a	n/a	n/a	n/a	n/a	n/a	n/a	n/a	n/a	n/a	n/a
		9	n/a	n/a	n/a	n/a	n/a	n/a	n/a	n/a	n/a	n/a	n/a	n/a
		8	n/a	n/a	n/a	n/a	n/a	n/a	n/a	n/a	n/a	n/a	n/a	n/a
		7	n/a	n/a	n/a	n/a	n/a	n/a	n/a	n/a	n/a	n/a	n/a	n/a
		6	n/a	n/a	n/a	n/a	n/a	n/a	n/a	n/a	n/a	n/a	n/a	n/a
		5	2500	n/a	n/a	n/a	n/a	n/a	n/a	n/a	n/a	n/a	n/a	n/a
		4	1250	2500	3750	n/a	n/a	n/a	n/a	n/a	n/a	n/a	n/a	n/a
		3	834	1667	2500	3334	4167	n/a	n/a	n/a	n/a	n/a	n/a	n/a
		2	625	1250	1875	2500	3125	3750	4375	n/a	n/a	n/a	n/a	n/a
		1	500	1000	1500	2000	2500	3000	3500	4000	4500	n/a	n/a	n/a
		0	417	834	1250	1667	2084	2500	2917	3334	3750	4167	n/a	n/a
	OPPOSING GRADE	-1	358	715	1072	1429	1786	2143	2500	2858	3215	3572	3929	4286
		-2	313	625	938	1250	1563	1875	2188	2500	2813	3125	3438	3750
		-3	278	556	834	1112	1389	1667	1945	2223	2500	2778	3056	3334
		-4	250	500	750	1000	1250	1500	1750	2000	2250	2500	2750	3000
		-5	228	455	682	910	1137	1364	1591	1819	2046	2273	2500	2728
		-6	209	417	625	834	1042	1250	1459	1667	1875	2084	2292	2500
		-7	193	385	577	770	962	1154	1347	1539	1731	1924	2116	2308
		-8	179	358	536	715	893	1072	1250	1429	1608	1786	1965	2143
		-9	167	334	500	667	834	1000	1167	1334	1500	1667	1834	2000
		-10	157	313	469	625	782	938	1094	1250	1407	1563	1719	1875
		-11	148	295	442	589	736	883	1030	1177	1324	1471	1618	1765
		-12	139	278	417	556	695	834	973	1112	1250	1389	1528	1667

Use the above chart to determine the approximate ramp length.

Step 1: Find the appropriate curb height along the top row.
Step 2: Follow the curb height down to the existing grade slope.
Step 3: The intersecting value is the approximate ramp length at the given slope.
Step 4: "n/a" indicates that a steeper slope must be used. The current slope produces a ramp length greater than 4500 mm.

FIGURE 6.20 (METRIC) (CONTINUED)

Design Considerations: Ramp and Flare Length Charts

APPROXIMATE RAMP LENGTH (MM) "G1" 7% SLOPE														
		"H" CURB HEIGHT (MM)												
"G2" EXISTING GRADE (%)			25	50	75	100	125	150	175	200	225	250	275	300
	CHASING GRADE	12	n/a	n/a	n/a	n/a	n/a	n/a	n/a	n/a	n/a	n/a	n/a	n/a
		11	n/a	n/a	n/a	n/a	n/a	n/a	n/a	n/a	n/a	n/a	n/a	n/a
		10	n/a	n/a	n/a	n/a	n/a	n/a	n/a	n/a	n/a	n/a	n/a	n/a
		9	n/a	n/a	n/a	n/a	n/a	n/a	n/a	n/a	n/a	n/a	n/a	n/a
		8	n/a	n/a	n/a	n/a	n/a	n/a	n/a	n/a	n/a	n/a	n/a	n/a
		7	n/a	n/a	n/a	n/a	n/a	n/a	n/a	n/a	n/a	n/a	n/a	n/a
		6	2500	n/a	n/a	n/a	n/a	n/a	n/a	n/a	n/a	n/a	n/a	n/a
		5	1250	2500	3750	n/a	n/a	n/a	n/a	n/a	n/a	n/a	n/a	n/a
		4	834	1667	2500	3334	4167	n/a	n/a	n/a	n/a	n/a	n/a	n/a
		3	625	1250	1875	2500	3125	3750	4375	n/a	n/a	n/a	n/a	n/a
		2	500	1000	1500	2000	2500	3000	3500	4000	4500	n/a	n/a	n/a
		1	417	834	1250	1667	2084	2500	2917	3334	3750	4167	n/a	n/a
		0	358	715	1072	1429	1786	2143	2500	2858	3215	3572	3929	4286
	OPPOSING GRADE	-1	313	625	938	1250	1563	1875	2188	2500	2813	3125	3438	3750
		-2	278	556	834	1112	1389	1667	1945	2223	2500	2778	3056	3334
		-3	250	500	750	1000	1250	1500	1750	2000	2250	2500	2750	3000
		-4	228	455	682	910	1137	1364	1591	1819	2046	2273	2500	2728
		-5	209	417	625	834	1042	1250	1459	1667	1875	2084	2292	2500
		-6	193	385	577	770	962	1154	1347	1539	1731	1924	2116	2308
		-7	179	358	536	715	893	1072	1250	1429	1608	1786	1965	2143
		-8	167	334	500	667	834	1000	1167	1334	1500	1667	1834	2000
		-9	157	313	469	625	782	938	1094	1250	1407	1563	1719	1875
		-10	148	295	442	589	736	883	1030	1177	1324	1471	1618	1765
		-11	139	278	417	556	695	834	973	1112	1250	1389	1528	1667
		-12	132	264	395	527	658	790	922	1053	1185	1316	1448	1579

Use the above chart to determine the approximate ramp length.

Step 1: Find the appropriate curb height along the top row.
Step 2: Follow the curb height down to the existing grade slope.
Step 3: The intersecting value is the approximate ramp length at the given slope.
Step 4: "n/a" indicates that a steeper slope must be used. The current slope produces a ramp length greater than 4500 mm.

FIGURE 6.20 (METRIC) (CONTINUED)

Design Considerations: Ramp and Flare Length Charts

APPROXIMATE RAMP LENGTH (MM) "G1" 8.33% SLOPE														
		"H" CURB HEIGHT (MM)												
"G2" EXISTING GRADE (%)			25	50	75	100	125	150	175	200	225	250	275	300
	CHASING GRADE	12	4575	4575	4575	4575	4575	4575	4575	4575	4575	4575	4575	4575
		11	4575	4575	4575	4575	4575	4575	4575	4575	4575	4575	4575	4575
		10	4575	4575	4575	4575	4575	4575	4575	4575	4575	4575	4575	4575
		9	4575	4575	4575	4575	4575	4575	4575	4575	4575	4575	4575	4575
		8	4575	4575	4575	4575	4575	4575	4575	4575	4575	4575	4575	4575
		7	1880	3760	4575	4575	4575	4575	4575	4575	4575	4575	4575	4575
		6	1073	2146	3219	4292	4575	4575	4575	4575	4575	4575	4575	4575
		5	751	1502	2253	3004	3754	4505	4575	4575	4575	4575	4575	4575
		4	578	1155	1733	2310	2887	3465	4042	4575	4575	4575	4575	4575
		3	470	939	1408	1877	2346	2815	3284	3753	4222	4575	4575	4575
		2	395	790	1185	1580	1975	2370	2765	3160	3555	3950	4345	4575
		1	342	683	1024	1365	1706	2047	2388	2729	3070	3411	3752	4093
		0	301	601	901	1201	1501	1801	2101	2401	2702	3002	3302	3602
	OPPOSING GRADE	-1	268	536	804	1072	1340	1608	1876	2144	2412	2680	2948	3216
		-2	243	485	727	969	1211	1453	1695	1937	2179	2421	2663	2905
		-3	221	442	662	883	1104	1324	1545	1766	1986	2207	2428	2648
		-4	203	406	609	812	1014	1217	1420	1623	1825	2028	2231	2434
		-5	188	376	563	751	938	1126	1313	1501	1688	1876	2064	2251
		-6	175	349	524	698	873	1047	1222	1396	1571	1745	1920	2094
		-7	164	327	490	653	816	979	1142	1305	1468	1631	1794	1957
		-8	154	307	460	613	766	919	1072	1225	1378	1531	1685	1838
		-9	145	289	433	578	722	866	1010	1155	1299	1443	1587	1732
		-10	137	273	410	546	682	819	955	1092	1228	1364	1501	1637
		-11	130	259	388	518	647	776	906	1035	1164	1294	1423	1552
		-12	123	246	369	492	615	738	861	984	1107	1230	1353	1476

Use the above chart to determine the approximate ramp length.

Step 1. Find the appropriate curb height along the top row.
Step 2. Follow the curb height down to the existing grade slope.
Step 3. The intersecting value is the approximate ramp length at the given slope.

FIGURE 6.20 (METRIC) (CONTINUED)

Design Considerations: Ramp and Flare Length Charts

APPROXIMATE RAMP LENGTH (MM) "G1" 10% SLOPE														
		"H" CURB HEIGHT (MM)												
"G2" EXISTING GRADE (%)			25	50	75	100	125	150	175	200	225	250	275	300
	CHASING GRADE	12	4575	4575	4575	4575	4575	4575	4575	4575	4575	4575	4575	4575
		11	4575	4575	4575	4575	4575	4575	4575	4575	4575	4575	4575	4575
		10	4575	4575	4575	4575	4575	4575	4575	4575	4575	4575	4575	4575
		9	2500	4575	4575	4575	4575	4575	4575	4575	4575	4575	4575	4575
		8	1250	2500	3750	4575	4575	4575	4575	4575	4575	4575	4575	4575
		7	834	1667	2500	3334	4167	4575	4575	4575	4575	4575	4575	4575
		6	625	1250	1875	2500	3125	3750	4375	4575	4575	4575	4575	4575
		5	500	1000	1500	2000	2500	3000	3500	4000	4500	4575	4575	4575
		4	417	834	1250	1667	2084	2500	2917	3334	3750	4167	4575	4575
		3	358	715	1072	1429	1786	2143	2500	2858	3215	3572	3929	4286
		2	313	625	938	1250	1563	1875	2188	2500	2813	3125	3438	3750
		1	278	556	834	1112	1389	1667	1945	2223	2500	2778	3056	3334
		0	250	500	750	1000	1250	1500	1750	2000	2250	2500	2750	3000
	OPPOSING GRADE	-1	228	455	682	910	1137	1364	1591	1819	2046	2273	2500	2728
		-2	209	417	625	834	1042	1250	1459	1667	1875	2084	2292	2500
		-3	193	385	577	770	962	1154	1347	1539	1731	1924	2116	2308
		-4	179	358	536	715	893	1072	1250	1429	1608	1786	1965	2143
		-5	167	334	500	667	834	1000	1167	1334	1500	1667	1834	2000
		-6	157	313	469	625	782	938	1094	1250	1407	1563	1719	1875
		-7	148	295	442	589	736	883	1030	1177	1324	1471	1618	1765
		-8	139	278	417	556	695	834	973	1112	1250	1389	1528	1667
		-9	132	264	395	527	658	790	922	1053	1185	1316	1448	1579
		-10	125	250	375	500	625	750	875	1000	1125	1250	1375	1500
		-11	120	239	358	477	596	715	834	953	1072	1191	1310	1429
		-12	114	228	341	455	569	682	796	910	1023	1137	1250	1364

Use the above chart to determine the approximate ramp length.

Step 1: Find the appropriate curb height along the top row.
Step 2: Follow the curb height down to the existing grade slope.
Step 3: The intersecting value is the approximate ramp length at the given slope.

FIGURE 6.20 (METRIC) (CONTINUED)

Design Considerations: Ramp and Flare Length Charts

APPROXIMATE RAMP LENGTH "G1" 5% SLOPE														
		"H" CURB HEIGHT (IN)												
			1	2	3	4	5	6	7	8	9	10	11	12
"G2" EXISTING GRADE (%)	CHASING GRADE	12	n/a	n/a	n/a	n/a	n/a	n/a	n/a	n/a	n/a	n/a	n/a	n/a
		11	n/a	n/a	n/a	n/a	n/a	n/a	n/a	n/a	n/a	n/a	n/a	n/a
		10	n/a	n/a	n/a	n/a	n/a	n/a	n/a	n/a	n/a	n/a	n/a	n/a
		9	n/a	n/a	n/a	n/a	n/a	n/a	n/a	n/a	n/a	n/a	n/a	n/a
		8	n/a	n/a	n/a	n/a	n/a	n/a	n/a	n/a	n/a	n/a	n/a	n/a
		7	n/a	n/a	n/a	n/a	n/a	n/a	n/a	n/a	n/a	n/a	n/a	n/a
		6	n/a	n/a	n/a	n/a	n/a	n/a	n/a	n/a	n/a	n/a	n/a	n/a
		5	n/a	n/a	n/a	n/a	n/a	n/a	n/a	n/a	n/a	n/a	n/a	n/a
		4	8.4	n/a	n/a	n/a	n/a	n/a	n/a	n/a	n/a	n/a	n/a	n/a
		3	4.2	8.4	12.5	n/a	n/a	n/a	n/a	n/a	n/a	n/a	n/a	n/a
		2	2.8	5.6	8.4	11.2	13.9	n/a	n/a	n/a	n/a	n/a	n/a	n/a
		1	2.1	4.2	6.3	8.4	10.5	12.5	14.6	n/a	n/a	n/a	n/a	n/a
		0	1.7	3.4	5.0	6.7	8.4	10.0	11.7	13.4	15.0	n/a	n/a	n/a
	OPPOSING GRADE	-1	1.4	2.8	4.2	5.6	7.0	8.4	9.8	11.2	12.5	13.9	n/a	n/a
		-2	1.2	2.4	3.6	4.8	6.0	7.2	8.4	9.6	10.8	12.0	13.1	14.3
		-3	1.1	2.1	3.2	4.2	5.3	6.3	7.3	8.4	9.4	10.5	11.5	12.5
		-4	1.0	1.9	2.8	3.8	4.7	5.6	6.5	7.5	8.4	9.3	10.2	11.2
		-5	0.9	1.7	2.5	3.4	4.2	5.0	5.9	6.7	7.5	8.4	9.2	10.0
		-6	0.8	1.6	2.3	3.1	3.8	4.6	5.4	6.1	6.9	7.6	8.4	9.1
		-7	0.7	1.4	2.1	2.8	3.5	4.2	4.9	5.6	6.3	7.0	7.7	8.4
		-8	0.7	1.3	2.0	2.6	3.3	3.9	4.5	5.2	5.8	6.5	7.1	7.7
		-9	0.6	1.2	1.8	2.4	3.0	3.6	4.2	4.8	5.4	6.0	6.6	7.2
		-10	0.6	1.2	1.7	2.3	2.8	3.4	3.9	4.5	5.0	5.6	6.2	6.7
		-11	0.6	1.1	1.6	2.1	2.7	3.2	3.7	4.2	4.7	5.3	5.8	6.3
		-12	0.5	1.0	1.5	2.0	2.5	3.0	3.5	4.0	4.5	5.0	5.4	5.9

Use the above chart to determine the approximate ramp length.

Step 1: Find the appropriate curb height along the top row.
Step 2: Follow the curb height down to the existing grade slope.
Step 3: The intersecting value is the approximate ramp length at the given slope.
Step 4: "n/a" indicates that a steeper slope must be used. The current slope produces a ramp length greater than 15'-0".

FIGURE 6.20 (ENGLISH)

Design Considerations: Ramp and Flare Length Charts

APPROXIMATE RAMP LENGTH "G1" 6% SLOPE														
		"H" CURB HEIGHT (IN)												
"G2" EXISTING GRADE (%)			1	2	3	4	5	6	7	8	9	10	11	12
	CHASING GRADE	12	n/a	n/a	n/a	n/a	n/a	n/a	n/a	n/a	n/a	n/a	n/a	n/a
		11	n/a	n/a	n/a	n/a	n/a	n/a	n/a	n/a	n/a	n/a	n/a	n/a
		10	n/a	n/a	n/a	n/a	n/a	n/a	n/a	n/a	n/a	n/a	n/a	n/a
		9	n/a	n/a	n/a	n/a	n/a	n/a	n/a	n/a	n/a	n/a	n/a	n/a
		8	n/a	n/a	n/a	n/a	n/a	n/a	n/a	n/a	n/a	n/a	n/a	n/a
		7	n/a	n/a	n/a	n/a	n/a	n/a	n/a	n/a	n/a	n/a	n/a	n/a
		6	n/a	n/a	n/a	n/a	n/a	n/a	n/a	n/a	n/a	n/a	n/a	n/a
		5	8.4	n/a	n/a	n/a	n/a	n/a	n/a	n/a	n/a	n/a	n/a	n/a
		4	4.2	8.4	12.5	n/a	n/a	n/a	n/a	n/a	n/a	n/a	n/a	n/a
		3	2.8	5.6	8.4	11.2	13.9	n/a	n/a	n/a	n/a	n/a	n/a	n/a
		2	2.1	4.2	6.3	8.4	10.5	12.5	14.6	n/a	n/a	n/a	n/a	n/a
		1	1.7	3.4	5.0	6.7	8.4	10.0	11.7	13.4	15.0	n/a	n/a	n/a
		0	1.4	2.8	4.2	5.6	7.0	8.4	9.8	11.2	12.5	13.9	n/a	n/a
	OPPOSING GRADE	-1	1.2	2.4	3.6	4.8	6.0	7.2	8.4	9.6	10.8	12.0	13.1	14.3
		-2	1.1	2.1	3.2	4.2	5.3	6.3	7.3	8.4	9.4	10.5	11.5	12.5
		-3	1.0	1.9	2.8	3.8	4.7	5.6	6.5	7.5	8.4	9.3	10.2	11.2
		-4	0.9	1.7	2.5	3.4	4.2	5.0	5.9	6.7	7.5	8.4	9.2	10.0
		-5	0.8	1.6	2.3	3.1	3.8	4.6	5.4	6.1	6.9	7.6	8.4	9.1
		-6	0.7	1.4	2.1	2.8	3.5	4.2	4.9	5.6	6.3	7.0	7.7	8.4
		-7	0.7	1.3	2.0	2.6	3.3	3.9	4.5	5.2	5.8	6.5	7.1	7.7
		-8	0.6	1.2	1.8	2.4	3.0	3.6	4.2	4.8	5.4	6.0	6.6	7.2
		-9	0.6	1.2	1.7	2.3	2.8	3.4	3.9	4.5	5.0	5.6	6.2	6.7
		-10	0.6	1.1	1.6	2.1	2.7	3.2	3.7	4.2	4.7	5.3	5.8	6.3
		-11	0.5	1.0	1.5	2.0	2.5	3.0	3.5	4.0	4.5	5.0	5.4	5.9
		-12	0.5	1.0	1.4	1.9	2.4	2.8	3.3	3.8	4.2	4.7	5.1	5.6

Use the above chart to determine the approximate ramp length.

Step 1: Find the appropriate curb height along the top row.
Step 2: Follow the curb height down to the existing grade slope.
Step 3: The intersecting value is the approximate ramp length at the given slope.
Step 4: "n/a" indicates that a steeper slope must be used. The current slope produces a ramp length greater than 15'-0".

FIGURE 6.20 (ENGLISH) (CONTINUED)

Design Considerations: Ramp and Flare Length Charts

APPROXIMATE RAMP LENGTH "G1" 7% SLOPE														
		"H" CURB HEIGHT (IN)												
"G2" EXISTING GRADE (%)			1	2	3	4	5	6	7	8	9	10	11	12
	CHASING GRADE	12	n/a	n/a	n/a	n/a	n/a	n/a	n/a	n/a	n/a	n/a	n/a	n/a
		11	n/a	n/a	n/a	n/a	n/a	n/a	n/a	n/a	n/a	n/a	n/a	n/a
		10	n/a	n/a	n/a	n/a	n/a	n/a	n/a	n/a	n/a	n/a	n/a	n/a
		9	n/a	n/a	n/a	n/a	n/a	n/a	n/a	n/a	n/a	n/a	n/a	n/a
		8	n/a	n/a	n/a	n/a	n/a	n/a	n/a	n/a	n/a	n/a	n/a	n/a
		7	n/a	n/a	n/a	n/a	n/a	n/a	n/a	n/a	n/a	n/a	n/a	n/a
		6	8.4	n/a	n/a	n/a	n/a	n/a	n/a	n/a	n/a	n/a	n/a	n/a
		5	4.2	8.4	12.5	n/a	n/a	n/a	n/a	n/a	n/a	n/a	n/a	n/a
		4	2.8	5.6	8.4	11.2	13.9	n/a	n/a	n/a	n/a	n/a	n/a	n/a
		3	2.1	4.2	6.3	8.4	10.5	12.5	14.6	n/a	n/a	n/a	n/a	n/a
		2	1.7	3.4	5.0	6.7	8.4	10.0	11.7	13.4	15.0	n/a	n/a	n/a
		1	1.4	2.8	4.2	5.6	7.0	8.4	9.8	11.2	12.5	13.9	n/a	n/a
		0	1.2	2.4	3.6	4.8	6.0	7.2	8.4	9.6	10.8	12.0	13.1	14.3
	OPPOSING GRADE	-1	1.1	2.1	3.2	4.2	5.3	6.3	7.3	8.4	9.4	10.5	11.5	12.5
		-2	1.0	1.9	2.8	3.8	4.7	5.6	6.5	7.5	8.4	9.3	10.2	11.2
		-3	0.9	1.7	2.5	3.4	4.2	5.0	5.9	6.7	7.5	8.4	9.2	10.0
		-4	0.8	1.6	2.3	3.1	3.8	4.6	5.4	6.1	6.9	7.6	8.4	9.1
		-5	0.7	1.4	2.1	2.8	3.5	4.2	4.9	5.6	6.3	7.0	7.7	8.4
		-6	0.7	1.3	2.0	2.6	3.3	3.9	4.5	5.2	5.8	6.5	7.1	7.7
		-7	0.6	1.2	1.8	2.4	3.0	3.6	4.2	4.8	5.4	6.0	6.6	7.2
		-8	0.6	1.2	1.7	2.3	2.8	3.4	3.9	4.5	5.0	5.6	6.2	6.7
		-9	0.6	1.1	1.6	2.1	2.7	3.2	3.7	4.2	4.7	5.3	5.8	6.3
		-10	0.5	1.0	1.5	2.0	2.5	3.0	3.5	4.0	4.5	5.0	5.4	5.9
		-11	0.5	1.0	1.4	1.9	2.4	2.8	3.3	3.8	4.2	4.7	5.1	5.6
		-12	0.5	0.9	1.4	1.8	2.2	2.7	3.1	3.6	4.0	4.4	4.9	5.3

Use the above chart to determine the approximate ramp length.

Step 1: Find the appropriate curb height along the top row.
Step 2: Follow the curb height down to the existing grade slope.
Step 3: The intersecting value is the approximate ramp length at the given slope.
Step 4: "n/a" indicates that a steeper slope must be used. The current slope produces a ramp length greater than 15'-0".

FIGURE 6.20 (ENGLISH) (CONTINUED)

Design Considerations: Ramp and Flare Length Charts

APPROXIMATE RAMP LENGTH "G1" 8.33% SLOPE														
		"H" CURB HEIGHT (IN)												
"G2" EXISTING GRADE (%)			1	2	3	4	5	6	7	8	9	10	11	12
	CHASING GRADE	12	15.0	15.0	15.0	15.0	15.0	15.0	15.0	15.0	15.0	15.0	15.0	15.0
		11	15.0	15.0	15.0	15.0	15.0	15.0	15.0	15.0	15.0	15.0	15.0	15.0
		10	15.0	15.0	15.0	15.0	15.0	15.0	15.0	15.0	15.0	15.0	15.0	15.0
		9	15.0	15.0	15.0	15.0	15.0	15.0	15.0	15.0	15.0	15.0	15.0	15.0
		8	15.0	15.0	15.0	15.0	15.0	15.0	15.0	15.0	15.0	15.0	15.0	15.0
		7	6.3	12.6	15.0	15.0	15.0	15.0	15.0	15.0	15.0	15.0	15.0	15.0
		6	3.6	7.2	10.8	14.4	15.0	15.0	15.0	15.0	15.0	15.0	15.0	15.0
		5	2.6	5.1	7.6	10.1	12.6	15.0	15.0	15.0	15.0	15.0	15.0	15.0
		4	2.0	3.9	5.8	7.7	9.7	11.6	13.5	15.0	15.0	15.0	15.0	15.0
		3	1.6	3.2	4.7	6.3	7.9	9.4	11.0	12.6	14.1	15.0	15.0	15.0
		2	1.4	2.7	4.0	5.3	6.6	7.9	9.3	10.6	11.9	13.2	14.5	15.0
		1	1.2	2.3	3.5	4.6	5.7	6.9	8.0	9.1	10.3	11.4	12.6	13.7
		0	1.1	2.1	3.1	4.1	5.1	6.1	7.1	8.1	9.1	10.1	11.1	12.1
	OPPOSING GRADE	-1	0.9	1.8	2.7	3.6	4.5	5.4	6.3	7.2	8.1	9.0	9.9	10.8
		-2	0.9	1.7	2.5	3.3	4.1	4.9	5.7	6.5	7.3	8.1	8.9	9.7
		-3	0.8	1.5	2.3	3.0	3.7	4.5	5.2	5.9	6.7	7.4	8.1	8.9
		-4	0.7	1.4	2.1	2.8	3.4	4.1	4.8	5.5	6.1	6.8	7.5	8.2
		-5	0.7	1.3	1.9	2.6	3.2	3.8	4.4	5.1	5.7	6.3	6.9	7.6
		-6	0.6	1.2	1.8	2.4	3.0	3.5	4.1	4.7	5.3	5.9	6.4	7.0
		-7	0.6	1.1	1.7	2.2	2.8	3.3	3.9	4.4	4.9	5.5	6.0	6.6
		-8	0.6	1.1	1.6	2.1	2.6	3.1	3.6	4.1	4.6	5.2	5.7	6.2
		-9	0.5	1.0	1.5	2.0	2.5	2.9	3.4	3.9	4.4	4.9	5.3	5.8
		-10	0.5	1.0	1.4	1.9	2.3	2.8	3.2	3.7	4.1	4.6	5.1	5.5
		-11	0.5	0.9	1.3	1.8	2.2	2.6	3.1	3.5	3.9	4.4	4.8	5.2
		-12	0.5	0.9	1.3	1.7	2.1	2.5	2.9	3.3	3.7	4.1	4.6	5.0

Use the above chart to determine the approximate ramp length.

Step 1. Find the appropriate curb height along the top row.
Step 2. Follow the curb height down to the existing grade slope.
Step 3. The intersecting value is the approximate ramp length at the given slope.

FIGURE 6.20 (ENGLISH) (CONTINUED)

Design Considerations: Ramp and Flare Length Charts

APPROXIMATE RAMP LENGTH "G1" 10% SLOPE														
		"H" CURB HEIGHT (IN)												
"G2" EXISTING GRADE (%)			1	2	3	4	5	6	7	8	9	10	11	12
	CHASING GRADE	12	15.0	15.0	15.0	15.0	15.0	15.0	15.0	15.0	15.0	15.0	15.0	15.0
		11	15.0	15.0	15.0	15.0	15.0	15.0	15.0	15.0	15.0	15.0	15.0	15.0
		10	15.0	15.0	15.0	15.0	15.0	15.0	15.0	15.0	15.0	15.0	15.0	15.0
		9	8.4	15.0	15.0	15.0	15.0	15.0	15.0	15.0	15.0	15.0	15.0	15.0
		8	4.2	8.4	12.5	15.0	15.0	15.0	15.0	15.0	15.0	15.0	15.0	15.0
		7	2.8	5.6	8.4	11.2	13.9	15.0	15.0	15.0	15.0	15.0	15.0	15.0
		6	2.1	4.2	6.3	8.4	10.5	12.5	14.6	15.0	15.0	15.0	15.0	15.0
		5	1.7	3.4	5.0	6.7	8.4	10.0	11.7	13.4	15.0	15.0	15.0	15.0
		4	1.4	2.8	4.2	5.6	7.0	8.4	9.8	11.2	12.5	13.9	15.0	15.0
		3	1.2	2.4	3.6	4.8	6.0	7.2	8.4	9.6	10.8	12.0	13.1	14.3
		2	1.1	2.1	3.2	4.2	5.3	6.3	7.3	8.4	9.4	10.5	11.5	12.5
		1	1.0	1.9	2.8	3.8	4.7	5.6	6.5	7.5	8.4	9.3	10.2	11.2
		0	0.9	1.7	2.5	3.4	4.2	5.0	5.9	6.7	7.5	8.4	9.2	10.0
	OPPOSING GRADE	-1	0.8	1.6	2.3	3.1	3.8	4.6	5.4	6.1	6.9	7.6	8.4	9.1
		-2	0.7	1.4	2.1	2.8	3.5	4.2	4.9	5.6	6.3	7.0	7.7	8.4
		-3	0.7	1.3	2.0	2.6	3.3	3.9	4.5	5.2	5.8	6.5	7.1	7.7
		-4	0.6	1.2	1.8	2.4	3.0	3.6	4.2	4.8	5.4	6.0	6.6	7.2
		-5	0.6	1.2	1.7	2.3	2.8	3.4	3.9	4.5	5.0	5.6	6.2	6.7
		-6	0.6	1.1	1.6	2.1	2.7	3.2	3.7	4.2	4.7	5.3	5.8	6.3
		-7	0.5	1.0	1.5	2.0	2.5	3.0	3.5	4.0	4.5	5.0	5.4	5.9
		-8	0.5	1.0	1.4	1.9	2.4	2.8	3.3	3.8	4.2	4.7	5.1	5.6
		-9	0.5	0.9	1.4	1.8	2.2	2.7	3.1	3.6	4.0	4.4	4.9	5.3
		-10	0.5	0.9	1.3	1.7	2.1	2.5	3.0	3.4	3.8	4.2	4.6	5.0
		-11	0.4	0.8	1.2	1.6	2.0	2.4	2.8	3.2	3.6	4.0	4.4	4.8
		-12	0.4	0.8	1.2	1.6	1.9	2.3	2.7	3.1	3.5	3.8	4.2	4.6

Use the above chart to determine the approximate ramp length.

Step 1: Find the appropriate curb height along the top row.
Step 2: Follow the curb height down to the existing grade slope.
Step 3: The intersecting value is the approximate ramp length at the given slope.

FIGURE 6.20 (ENGLISH) (CONTINUED)

Design Considerations: Ramp and Flare Length Charts

6.10 CURB RAMP DESIGN REQUIREMENTS FOR ROADWAY INTERSECTIONS

A. Separate Curb Ramps or Single "Diagonal" Curb Ramp.

1. Two separate curb ramps (one curb ramp per crossing direction) must be used at each roadway intersection corner for all projects where technically feasible. This provides several advantages such as increased visibility, directional cues, decreased pedestrian crossing distance and does not require a wheelchair user to change direction when entering or leaving the curb ramp.

2. A single diagonal curb ramp (one curb ramp per two crossing directions at the middle of the curve) may be used where separate curb ramps are not feasible. Diagonal curb ramps are acceptable (with ADE of Design or delegate approval), provided crosswalks are constructed wide enough that a person in a wheelchair may enter either crosswalk from the ramp or the crosswalk markings provide a minimum 1220 mm (48 in) wide overrun clear zone at the bottom of the curb ramp. It is important to a visually impaired person using the sidewalk that the location of the curb ramps be as uniform as possible within a general area. See Publication 72M, *Roadway Construction Standards*, RC-67M for typical Type 1 curb ramp layouts at an intersection.

Diagonal curb ramps are not preferred and should be <u>used sparingly</u> in areas where pedestrian or vehicular traffic volumes are both moderate to high. Avoid using single ramps for large radius corner curbs. This type of location is less satisfactory for persons with visual disabilities since they are not useful to provide directional information about the crosswalk and may misdirect users.

Diagonal curb ramp locations also require pedestrians using wheelchairs to change direction when entering or leaving the curb ramp unless a diagonal intersection movement is allowed. The turning movement requires more time to cross the intersection and is performed where the pedestrian may be exposed to turning vehicular traffic.

When an existing diagonal curb ramp is altered, the existing diagonal curb ramps must be removed and replaced with separate curb ramps where technically feasible. Diagonal ramps will be acceptable for the following situations:

- Separate curb ramps cannot be installed to fully meet PennDOT standards; however, a diagonal ramp can be installed and fully meet PennDOT standards.
- When separate curb ramps would create a negative impact to:
  - Sight distance
  - Alignment with curb ramps on other side of street
  - Drainage/ponding
  - Relocated cross walk or stop bar locations would be undesirable
- Installation of separate curb ramps would require significant out of scope work that would stop construction or cancel project.
- Other factors as determined by the ADE of Design.

B. Pedestrian Crosswalk Location. Establish the inside pedestrian crosswalk lines by bisecting the intersection radii. The outside crosswalk lines may be placed close to the edge of the curb ramp if necessary. Sound engineering judgment is always necessary for minor adjustments in the curb ramp locations if the intersection has corners with varying radii or the corner is critical for ramp location.

C. Flares and Crosswalks. Single corner (Diagonal) Type 1 curb ramps must have at least a 610 mm (24 in) long segment of full height curb located on each side of the curb ramp between the flare and the nearest marked crosswalk lines.

D. Drainage. Curb ramps should not be located where pedestrians must cross drainage structures such as inlets and manholes. Design must consider both the location of the curb ramp and the location of the drainage structures in new construction. Locate additional drainage inlets on the upstream side of all curb ramps where applicable and locate curb ramps away from low points of the curb return.

6.11 CURB RAMP DESIGN CRITERIA

A. See PAR Requirements. Section 6.5.

B. Depressed Curb for Curb Ramps. The transition from curb ramp to adjacent sidewalks, streets or gutters, etc. must be flush and free of abrupt changes. For pedestrians using a wheelchair, a vertical lip at the depressed curb for curb ramps causes the pedestrian to exert additional force and may result in a backward direction fall. A vertical lip is acceptable and practical at depressed curb for driveways since it is not located within the PAR and only vehicles will travel across this change in elevation.

C. Curb Ramp Slopes. The least possible slope must be used for any curb ramp. However, the maximum curb ramp slope is 1V:12H (8.33%). Care should be taken to assure a uniform grade on the curb ramp free of sags and short grade changes. Position the ramp slope perpendicular to the curb to provide a grade break that may be approached perpendicularly. See Figure 6.11. It may be necessary to limit the run of a parallel or perpendicular curb ramp in order to avoid chasing grade indefinitely when traversing the height of curb. Curb ramp length not to exceed 4500 mm (15 ft). Adjust the curb ramp slope as needed to provide access to the maximum extent feasible.

D. Curb Ramp Widths. Minimum width of a curb ramp is 1220 mm (48 in) exclusive of flared side slopes.

E. Flares Located Within Pedestrian Access Route. Curb ramp side flares positioned where pedestrians can walk across them must have flared sides with a maximum slope of 1V:10H (10.00%), measured parallel along the curb. If the level landing at the top of the curb ramp is less than 4 ft deep, flares shall be 8.33% maximum. It may be necessary to limit the length of a flare in order to avoid chasing grade indefinitely when traversing the height of curb. Flare length, measured along the curb, should not exceed 4500 mm (15 ft). Adjust flare slope as needed to provide access to the maximum extent feasible. See Publication 72M, *Roadway Construction Standards*, RC-67M details for additional information.

F. Flares and Return Curbs Located Outside of Pedestrian Circulation Path. In locations where pedestrians would not normally walk across the flare due to sidewalk obstructions such as street furniture, poles, fire hydrants, grass or tree lawns, return curbs may be used thereby eliminating the need for flared side slope surfaces (Type 4 and 4A curb ramps, see Publication 72M, *Roadway Construction Standards*, RC-67M). Note: Objects cannot be placed where they would affect clear zone or sight distance requirements.

G. Landing Requirements.

1. Triangular Landings on Radial Curb. If a curb ramp is not installed perpendicular to the curb, a triangular landing must be installed at the bottom of the curb ramp to provide an approach to the grade break. Installing the curb ramp in the same direction as the crossing provides a directional cue for pedestrians with visual disabilities. The detectable warning surface must be installed behind the grade break.

2. Type 1 Curb Ramps. For a Type 1 curb ramp a landing is required at the top of the curb ramp and is connected to the continuous passage. For alterations to existing facilities where site infeasibility precludes the 1220 mm (48 in) landing length at the top of the curb ramp and other curb ramp types do not provide adequate access, then a minimum 915 mm (36 in) landing length may be provided. When the Type 1 curb ramp top landing is less than 1220 mm (48 in), the slope of the side flares must be 1V:12H (8.33%) maximum.

H. Miscellaneous Requirements.

1. Railings. Curb ramps do not require handrails.

6.12 TRAFFIC CONTROL REQUIREMENTS

The requirements described herein may not fit all situations and cannot replace the need for the use of sound engineering judgment in the location and design of curb ramps and crosswalk markings. Although the written guidance in this Manual does not indicate that a diagonal curb ramp requires the installation of a crosswalk, as a

safety consideration, new crosswalk striping should be added to projects in medium to high pedestrian traffic areas to create the necessary clear space within the crosswalk configuration.

1. When the curb ramp is at the middle of curve (MC), the inside pedestrian crosswalk lines should be established by bisecting the intersecting radii and locating the crosswalk lines 1220 mm (48 in) from the MC as shown on the Standards for Roadway Construction.

2. Stop line markings should be used where it is important to indicate the point behind which vehicles are required to stop in compliance with a traffic signal, stop sign or other legal requirements. Markings should be placed 1220 mm (48 in) in advance of and parallel to the nearest crosswalk line.

3. For additional design guidance and recommendations with respect to pedestrian crosswalk markings, refer to the *MUTCD*.

6.13 PEDESTRIAN CROSSING CONTROLS

When provided, pedestrian-actuated crosswalk crossing controls on accessible routes must meet the following guidelines:

1. Controls must be raised from or flush with their housings and be a minimum of 50 mm (2 in) in the smallest dimension. The force required to activate the control must be no greater than 22 N (5 lb).

2. Controls must be located as close as practicable to the curb ramp serving the controlled crossing and permit operation from a clear ground space. Control location must not interfere with the movement of pedestrians on or across the curb ramp.

3. Controls must be a maximum height of 1065 mm (42 in) above the finished sidewalk surface.

4. A firm stable and slip resistant area with a minimum size of 1220 mm × 1220 mm (48 in × 48 in) must be provided to allow for a forward or parallel approach to the controls. Where a parallel approach is provided, controls must be within 255 mm (10 in) horizontally of and centered on the clear ground space. Where a forward approach is provided, controls must abut and be centered on the clear ground space.

5. Refer to the *MUTCD* for additional guidance.

6.14 TEMPORARY ALTERNATE CIRCULATION PATHS AT CONSTRUCTION SITES

Construction and alteration work within the public right-of-way that affects pedestrian circulation elements, spaces, or facilities must comply with the following provisions:

1. Construction or alterations affecting pedestrian pathways must require the provision of a safe, alternate and accessible pedestrian circulation path around the construction activities.

2. The alternate route must comply with all applicable design guidelines to the maximum extent feasible under existing conditions so that the usability of the accessible route is maintained.

3. The alternate route must be kept in place through the duration of the construction activity and must be clearly signed for pedestrian use. See Publication 213, *Temporary Traffic Control Guidelines*, PATA 40 and 41 and *MUTCD* Figures 6H-28 and 6H-29 for pedestrian notification signage for pedestrian route closings and detours.

4. The alternate route should be provided on the same side of the street as the disrupted route, to the maximum extent feasible. Where it is not feasible to provide a same-side alternate circulation path, detour the pedestrians to a similar level of accessible route as the disrupted route as close to the construction site as

possible. The detour circulation path may require the installation of temporary accessible pedestrian signals, curb ramps, or other accessibility facilities.

5. Walking surfaces must be firm, stable, slip-resistant, at least 1525 mm (60 in) wide and be maintained free of rubble or debris that would adversely affect the movement of persons with mobility problems. The width may be reduced to 1220 mm (48 in) if passing areas 1525 mm × 1525 mm (60 in × 60 in) are provided every 61 m (200 ft).

6. The alternate circulation path must be protected from construction activities, drop-offs, and vehicular traffic with approved pedestrian barricades or channelizing devices. The pedestrian barriers or channelizing devices must be continuous, stable and non-flexible and consist of a wall, fence, or enclosures specified in *MUTCD* Sections 6F.63, 6F.68 and 6F.71 with detectable, continuous bottom edge 150 mm (6 in) maximum height above the walkway surface.

7. The barricades and channelizing devices must also provide a continuous surface or upper rail at a 915 mm (36 in) minimum height above the walkway surface and toe rail at 150 mm (6 in) maximum height above the walkway surface. Support members may not protrude into the alternate circulation path. Sidewalk barriers should be detectable by blind pedestrians or those who have low vision. Plastic tape, movable cones, and print signs at a sidewalk excavation will not generally provide adequate notice or protection. Accessibility provisions for protruding objects and construction barrier criteria in the *MUTCD* offer helpful guidance in this area.

8. Protrusions into the alternate circulation path are not permitted.

6.15 TECHNICAL Q&A INFORMATION FOR ACCESSIBILITY ISSUES

These questions and answers are general in nature and may not be inclusive of the full scope of accessibility issues at a given site. All alteration project sites must be fully evaluated on a site by site basis to determine what accessibility issues should be included in the alteration work operations.

All curb ramp details in the 2010 ADA Standards, PROWAG and other approved reference sources that have developed various curb ramp types are indicated for new construction applications. There are few specific alteration construction details since there could be innumerable existing site conditions that could require detail adjustments. However, several alteration details have been added to Publication 72M, *Roadway Construction Standards*, RC-67M for certain accessibility situations. Each curb ramp alteration will require engineering adaptation to adjust the construction detail to the alteration site conditions.

The answers to these questions have been derived from several sources related to the ADA law, ADAAG standards, PROWAG and FHWA guidelines.

A. ADA Authority and Function.

***1. Question* - What's the difference between the ADA, ADA regulations and ADAAG?**
***Answer* -** The Americans with Disabilities Act (ADA) is a law passed in July 1990 that prohibits discrimination on the basis of disability. The statute required certain designated Federal agencies to develop implementing regulations, the first of which were promulgated in July of 1991. This rulemaking continues today. The regulations detail a wide range of administrative and procedural requirements, including compliance with design and construction standards; those standards are expressed in the Americans with Disabilities Act Accessibility Guidelines (ADAAG). ADAAG contains requirements for new construction and alterations. The U.S. Access Board develops the requirements as "guidelines" to serve as a basis for "standards" enforced by the Department of Justice (DOJ) and the Department of Transportation (US DOT). ADAAG derived from an earlier Federal standard, the Uniform Federal Accessibility Standards (UFAS). See Section 6.2 for additional information.

***2. Question* – Is PennDOT responsible for all ADA curb ramps for all accessible routes within our highway right-of-way regardless of who has jurisdiction for an intersecting municipal street or roadway?**

***Answer* -** Pennsylvania law does not, as a rule, require PennDOT to construct sidewalks. The Department is permitted by Pennsylvania law to install sidewalks as a part of State funded projects under certain circumstances including the need to address the safety of pedestrian traffic. Generally, sidewalk installation is at the discretion of the Secretary and requires a formal agreement with the involved municipality or local government. The installation of a sidewalk is considered a "construction improvement" with repairs and maintenance being a local government responsibility.

Similarly, the legal responsibility for maintenance of pedestrian facilities beyond the curb line, with certain exceptions, lies with either the municipality or adjoining property owners. The curb ramp is a portion of the sidewalk system that allows ADA pedestrian accessibility across the roadway.

The ADA effectively preempted PA law regarding responsibility for areas beyond the curb line by attaching liability for construction of curb ramps to the "public entity" with the responsibility or authority over streets, roads or walkways. (PennDOT is responsible to provide curb ramps that cross state roadways and local municipalities are responsible to provide curb ramps that cross their streets and other roadways.)

The ADA did not, however, assign a maintenance obligation to the "public entity" installing the curb ramp. Therefore, PA law has not been preempted concerning maintenance obligations and PennDOT is not required to maintain a curb ramp behind the curb line even though we may have originally constructed the ramp to provide access across a municipal street or roadway. See Section 6.6 for additional information.

3. *Question* - What is the public right-of-way?

***Answer* -** The public right-of-way consists of everything between the right-of-way limits, including travel lanes, medians, planting strips, sidewalks and other facilities.

***4. Question* - What are the elements of an accessible design?**

***Answer* -** Public agencies have the choice of whether to follow the standards in the ADA Accessibility Guidelines (ADAAG) or the Uniform Federal Accessibility Standards (UFAS). Source: 28 CFR §35.151(c); (Appendix A to 28 CFR Part 36). *FHWA encourages public agencies to use ADAAG and the United States Access Board Public Rights-of-Way Accessibility Guidelines (PROWAG) as a best practice where the current standard, ADAAG, is silent or inapplicable, according to a February 2006 Federal Highway Administration (FHWA) Memorandum.* Under the ADAAG standards, an accessible design to a highway, street, or walkway includes accessible sidewalks and curb ramps with detectable warnings. Source: 28 CFR §35.151(c) and (e) (curb ramps), ADAAG 4.3-4.5 (accessible routes), 4.7 (curb ramps with detectable warnings), 4.29 (detectable warnings). Continuously maintained sidewalks are required by the case of Barden v. City of Sacramento, 292 F.3d 1073 (9th Cir. 2002), cert. denied, 123 S.Ct. 2639 (2003).

Accessible pedestrian signals and signs must be considered, with a reasonable and consistent plan to facilitate safe street crossings. Source: 28 CFR §35.151(c); 23 U.S.C. §217(g)(2). See Section 6.2 for additional information.

***5. Question* - When should accessible design elements be incorporated into projects in the public right-of-way?**

***Answer* -** FHWA encourages the consideration of pedestrian needs in all construction, reconstruction and rehabilitation projects. If a public agency provides pedestrian facilities, those facilities must be accessible to persons with disabilities. A public agency is not relieved of its obligation to make its pedestrian facilities accessible if no individual with a disability is known to live in a particular area. This is true regardless of its funding source. Source: DOJ's ADA Title II Technical Assistance Manual, § II-5.1000, 1993. See Section 6.0 for additional information.

***6. Question* - What should a public agency do when it does not control all of the public right-of-way required to provide access for persons with disabilities?**
***Answer* -** The public agency should work jointly with all others with interests in the highway, street, or walkway to ensure that pedestrian access improvements occur at the same time as any alteration or new project. *The ADA encourages this cooperation by making each of the public agencies involved subject to complaints or lawsuits for failure to meet the ADA and Section 504 requirements*. Source: 28 CFR §§ 35.170 – 35.178. See Section 6.2.B for additional information.

***7. Question* - Does the ADA permit an individual with a disability to sue when that individual believes that discrimination is about to occur, or must the individual wait for the discrimination to occur?**
***Answer* -** The ADA permits an individual to allege discrimination based on a reasonable belief that the planned construction or alteration of a place of public accommodation, such as curb ramps, have not been adequately provided at public sidewalk crossings of a street or are non-conforming to the ADAAG. The resolution of such challenges prior to the construction of a facility is encouraged to enable any necessary remedial measures to be incorporated during the planning, design, or construction stages, when such changes can be more readily addressed. FHWA has federal oversight authority for the investigation of transportation related ADA issues.

***8. Question* - What projects must provide pedestrian access for persons with disabilities?**
***Answer* -** Any project for construction or alteration of a facility that provides access to pedestrians must be made accessible to persons with disabilities. Source: 42 U.S.C. §§ 12131 - 12134; 28 CFR §§ 35.150, 35.151; Kinney v. Yerusalim**,** 9 F.3d 1067 (3d Cir. 1993), cert. denied, 511 U.S. 1033 (1994). See Section 6.2 for additional information.

***9. Question* - How does cost factor into a public agency's decision in its transition plan concerning which existing facilities must comply with ADA and Section 504 pedestrian access requirements?**
***Answer* -** For existing facilities requiring accessibility improvements as scheduled in the transition plans, the public agency must provide accessibility improvements unless the cost of the upgrades is unduly burdensome. The test for being unduly burdensome is the proportion of the cost for accessibility improvements compared to the agency's overall budget, not simply the project cost. Source: 28 CFR Part 35, App. A, discussion at §35.150, ¶¶ 4 – 7.

The decision that pedestrian access would be unduly burdensome must be made by the head of a public agency or that official's designee, accompanied by a written statement of the reasons for the decision. Source: 28 CFR §35.150(a)(3).

***10. Question* - Can cost be a reason not to complete an ADA-required accessibility improvement for a new project planned outside of the transition plan, with ADA accessibility improvements required to make the facility readily accessible and usable by individuals with disabilities?**
***Answer* -** No. Cost may not be a reason to fail to construct or delay constructing a new facility so that the facility is readily accessible to and usable by persons with disabilities under the ADAAG standards. Source: 28 CFR §35.151(a); see DOJ Technical Assistance Manual for Title II of the ADA, II-6.3100(3). See Section 6.2.B.4 for additional information.

***11. Question* - Can cost be a reason to decide what ADA-required improvements will be completed for an alteration project planned outside of the transition plan, with ADA accessibility improvements required within the scope of the project?**
***Answer* -** No. Cost may not be a reason for a public entity to fail to complete an ADA-required improvement within the scope of an alteration project under the ADAAG standards. A public agency must complete any ADA-required accessibility improvements within the scope of an alteration project to the maximum extent feasible. Source: 28 CFR §35.151(b); DOJ Technical Assistance Manual for Title II of the ADA, II-6.3100(4). See Section 6.2.B.4 for additional information.

***12. Question* - Can a public agency delay compliance with the ADA and Section 504 on alteration projects through a systematic approach to schedule the project?**
***Answer* -** No. All pedestrian access upgrades within the scope of the project must occur at the same time as the alteration. Source: Kinney v. Yerusalim**,** 9 F.3d 1067 (3d Cir. 1993), cert. denied, 511 U.S. 1033 (1994). See Section 6.2.B for additional information.

B. General Design Criteria.

***1. Question* - Are handrails required for curb ramps?**
***Answer* -** Handrails are not required on curb ramps. (ADAAG Section 4.8.5)

***2. Question* - Is there a minimum landing width requirement at the top of a curb ramp? *ADAAG* Figure 12 shows a dimension "X" that is related to the slope of the side flares, but does not indicate a minimum.**
***Answer* -** The ADAAG minimum landing width at the top of a curb ramp is 915 mm (36 in). PROWAG minimum landing requires a minimum of 1220 mm (48 in). It should be noted, Publication 72M, *Roadway Construction Standards*, RC-67M depicts a 1220 mm (48 in) minimum landing. A curb ramp is part of the accessible route and must maintain a maximum 1V:50H (2.00%) cross slope. Where pedestrians perform turning maneuvers, a level landing [1V:50H (2.00%) maximum longitudinal and cross slope in any direction] is required.

Figure 12 in the ADAAG is not intended to represent all of the requirements for curb ramps. The actual requirements are contained in the text of the technical specifications (*ADAAG 4.3.3 & 4.7.1).* See Section 6.11.G for additional information.

***3. Question* - Does a level landing mean a zero percent slope?**
***Answer* -** The requirement for level landings refers to ramps (ADAAG Section 4.8.5) and does not refer specifically to curb ramps. In general, "level" means having a slope no greater than 1V:50H (2.00%) in longitudinal and cross slope. Landings at the top of curb ramps are generally part of a sidewalk configuration and are permitted to have a maximum cross slope of 1V:50H (2.00%) to allow for drainage to avoid the accumulation of water on the sidewalk. Any cross slopes on sidewalks and other ground surfaces can cause considerable difficulty in maneuvering a wheelchair in a straight line. See Section 6.1 for additional information.

***4. Question* - Are curb ramps required to have detectable warnings?**
***Answer* -** Originally, ADAAG required detectable warnings, a distinctively bumpy surface (truncated dome) detectable by cane and underfoot, on the entire surface of curb ramps to provide a tactile cue for persons with vision impairments of their approach to streets. This warning was required since the sloped surfaces of curb ramps remove a tactile cue provided by curb faces. The U.S. Access Board temporarily suspended these requirements for curb ramps in 1994 due to concerns raised about the technical specifications, the availability of complying products, snow and ice removal maintenance issues, usefulness and safety. DOJ and US DOT joined in this action, which effectively removed the requirement from the enforceable standards. The suspension was extended twice (in 1996 and 1998) to accommodate the review and update of ADAAG. The ADAAG Review Advisory Committee recommended that the issue of detectable warnings at curb ramps should be resolved specifically in relation to public rights-of-ways before reinstating any requirements in ADAAG, which specifically now applies to facilities on sites. The Board agreed and did not include requirements for detectable warnings at curb ramps in its update of ADAAG. Consequently, the Board did not further extend the suspension, which expired on July 26, 2001. Since the enforcing agencies did not also extend the suspension, the detectable warning requirements *are technically part of the standards again.* New guidelines have been developed and will be presented for public street curb ramps in a forthcoming guideline covering public rights-of-way (PROW). Publication 72M, *Roadway Construction Standards*, RC-67M has been revised to incorporate the new truncated dome dimensions and alignment. See Section 6.5.A.8 for additional information.

***5. Question* - Some older curb ramps have grooved or other textured surface treatments that were to make them detectable by persons with visual impairments or create a slip-resistance surface. Are these surfaces acceptable as the detectable warning strip requirement on curb ramps and other hazardous vehicular crossings?**
***Answer* -** No. A number of other textured surfaces have been used on curb ramps, but they have not been demonstrated to be highly detectable to pedestrians who are blind, both underfoot and by the use of a long cane. Grooved cement has been found to be minimally detectable to people using a long cane as a travel aid and it is even less detectable underfoot. Other decorative surfaces that may be assumed to be detectable have not been tested for detectability. Many surfaces that look like they should be highly detectable have been found to be low in detectability. Consistency in a warning surface is essential if it is to reliably be understood as a warning by pedestrians with visual impairments. The truncated dome texture specified in ADAAG (4.29.2) is the only surface that should be considered a detectable warning. See Section 6.5.A.8 for additional information.

***6. Question* - The truncated dome warning surface is to cover the entire surface of the curb ramp in the original ADAAG. Why has this requirement been changed to require only a 610 mm (2 ft) wide strip at the bottom of the curb ramp?**
***Answer* -** The change was made to reflect the width of detectable warning strips required at transit platform edges (ADAAG 1991). The rationale for the 610 mm (2 ft) width of detectable warnings has been repeatedly demonstrated to be a sufficient width of a surface highly detectable both underfoot and by use of a long cane, to enable detection and stopping on that surface by most blind travelers. A longer width of the detectable surface can confuse pedestrians that have become accustomed to the shorter requirement and mislead them as to where the edge of the street is actually located.

***7. Question* - Why has the alignment of the truncated domes been changed? Is the older arrangement of domes on an existing curb ramp still in compliance with the ADA?**
***Answer* -** The desired current arrangement of the rows of domes is to be aligned with the path of wheelchair travel and perpendicular to the grade break at the toe of the ramp. Pedestrians encountering either configuration will find the surface pattern equally detectable and the older alignment is still in compliance with ADAAG. See Section 6.5.A.8.b for additional information.

***8. Question* - Do sidewalk crossings of residential driveways require detectable warning surfaces on either side of the driveway?**
***Answer* -** No. Generally sidewalk crossings of residential driveways will not be provided with detectable warnings, since the pedestrian right-of-way continues across most driveway aprons and overuse of detectable warning surfaces should be avoided in the interest of message clarity for persons with visual impairments. See Section 6.5.A.8 for additional information.

***9. Question* - Do sidewalk crossings of commercial driveways require detectable warnings?**
***Answer* -** Yes, in certain situations. Where commercial driveways are provided with traffic control devices or otherwise are permitted to operate like public streets, detectable warnings should be provided at the junction between the pedestrian route and the commercial driveway. See Section 6.5.A.8 for additional information.

***10. Question* - Must the dimensions indicated in ADAAG be precisely met?**
***Answer* -** Yes. Dimensions that are not marked minimum or maximum are absolute, unless otherwise indicated in the text or captions.

***11. Question* - Must the bottom of the curb ramp at the depressed curb line be flush with the adjacent roadway surface? Doesn't ADAAG allow for a 6 mm (0.25 in) vertical rise?**
***Answer* -** The ADAAG specifically states that the transition from curb ramps to walks, gutter or streets must be flush and free of abrupt changes. Any lip at the transition area can cause disruption to wheelchair movement since the small front wheels (casters) swivel freely. When the casters hit a raised lip, they swivel sideways and stop rolling. ADAAG does allow (Section 4.5.2) vertical changes in level up to 6 mm (0.25 in) without edge treatment *along an accessible route*, but the requirement for curb ramp transition to an adjacent surface requires a flush transition. See Section 6.11.B for additional information.

***12. Question* - Is environmental documentation required for curb ramps during resurfacing projects?**
***Answer* -** That is a decision that must be made based on the overall scope of the alteration project. Publication 10B, Design Manual, Part 1B, *Post-TIP NEPA Procedures*, provides two CE actions that should cover this work if there is no additional right-of-way required in the project. Resurfacing is covered by a Level 1b CE Action #1 - modernization of a highway by resurfacing. Curb ramps are covered by a Level 1a CE Action #3 - Construction of bicycle and pedestrian lanes, paths and facilities and #15 – Alterations to facilities or vehicles in order to make them accessible for the elderly and handicapped persons.

A Level 1a CE is approved by the District Environmental Manager. A Level 1b CE is approved by the District Executive.

***13. Question* - If the intersection is provided with crosswalks must the curb ramp be inside the crosswalk lines?**
***Answer* -** The curb ramps at indicated crosswalks must be contained within the crosswalk lines. For ramps that serve only one crosswalk direction, the flares may be placed outside of the crosswalk. For diagonal ramps that serve two crosswalk directions, the flares must be inside of the crosswalk lines. See Publication 72M, *Roadway Construction Standards*, RC-67M for details.

***14. Question* - Do pedestrian sidewalk crossings of curbed alleys require curb ramps?**
***Answer* -** Yes. Detectable warnings should be provided at the junction between the pedestrian route and the alley. All pedestrian crossings of a curbed roadway must be provided with accessible curb ramps complete with detectable warning surfaces since the alley represents a hazard in the line of travel for pedestrians who are visually impaired. See Section 6.5.A.8 for additional information.

***15. Question* - Should detectable warning surfaces be placed at sidewalk crossings of alleys that are at the same elevation as the sidewalk?**
***Answer* -** Yes. Detectable warnings should be provided at the junction between the pedestrian route and the alley. The sidewalk crossing of the alley presents a hazardous condition and the detectable warning surface alerts pedestrians who are visually impaired to the presence of hazards in the line of travel, indicating that they should stop and determine the nature of the hazard before proceeding further.

Also from Public Rights of Way (PROW) - Advisory R221 Detectable Warning Surfaces. "Detectable warning surfaces are required where curb ramps, blended transitions, or landings provide a flush pedestrian connection to the street." See Section 6.5.A.8 for additional information.

***16. Question* - Are existing ADA accessibility facilities constructed under previous ADA criteria required to be upgraded every time new accessibility criteria are issued?**
***Answer* -** No. Existing ADA accessibility facilities are not required to be upgraded every time new accessibility criteria are issued. However, upgrading to new criteria would be required when the existing accessibility feature is located within the project scope or limits of work of various types of alteration projects or in new construction. See Section 6.2.C for additional information.

C. Elements of Accessible Design - Alterations.

***1. Question* - What projects constitute an alteration to the public right-of-way?**
***Answer* -** An alteration is a change to a facility in the public right-of-way that affects or could affect access, circulation, or use. Projects altering the use of the public right-of-way must incorporate pedestrian access improvements within the scope of the project to meet the requirements of the ADA and Section 504. These projects have the potential to affect the structure, grade, or use of the roadway. Alterations include items such as reconstruction, major rehabilitation, widening, resurfacing (e.g., overlays and mill and fill), signal installation and upgrades and projects of similar scale and effect. See Section 6.1 for additional information.

***2. Question* - When does the scope of an alteration project trigger accessibility improvements for people with disabilities?**
***Answer* -** The scope of an alteration project is determined by the extent the alteration project *directly changes or affects* the public right-of-way within the project limits. *The public agency must improve the accessibility of only that portion of the public right-of-way changed or affected by the alteration.* If a project resurfaces the

street for accessibility purposes, the curb ramps, and pavement at the pedestrian crosswalk are in the scope of the project, but the sidewalks are not. Any of the facilities disturbed by the construction must be replaced so that they are accessible. All remaining access improvements within the public right-of-way must occur within the schedule provided in the public agency's planning process. See Section 6.2.B for additional information.

***3. Question* - Can my alteration project decrease or have the effect of decreasing ADA accessibility below the requirements of new construction at the time of the alteration?**
***Answer* -** No. No alteration project should be undertaken which would decrease or have the effect of decreasing accessibility or utilization of an ADA feature or facility. However, if compliance with ADA standards is *technically infeasible*, the alteration must provide accessibility to the maximum extent feasible within the scope of the alteration. See Section 6.9.D.5 for additional information.

***4. Question* - What if the ADA standards do not indicate specific details applicable for my alteration site or where full compliance to the standards would be technically infeasible?**
***Answer* -** Where ADA standards do not include detailed provisions for a specific alteration situation, the designer must determine what constitutes accessible design based on sound engineering judgment to utilize the current standards and provide accessibility to the maximum extent feasible. See Section 6.9.F for additional information.

***5. Question* - How can *technically infeasible* be better understood? Do utility and right-of-way impacts meet the definition of technically infeasible?**
***Answer* -** The highest degree of accessibility is expected in new construction. Alterations to existing facilities must observe new construction criteria where technically feasible; less stringent technical specifications may be applied where technical infeasibility is encountered. Existing facilities must achieve a level of usability that balances user needs, the constraints of existing conditions and the resources available for remedial work.

Alterations constrained by work already in place, may default to an intermediate standard when structural and site conditions prohibit full accessibility. Existing facilities must provide access to the maximum extent possible, a flexibility that permits needs to be balanced against available resources. If the alteration project scope of work involves utility relocations or additional right-of-way acquisition at the location of the pedestrian facilities, then new construction standards should be utilized. If the project scope of work does not require utility relocations or acquisition of additional right-of-way, then those elements can be considered as being constraining features or technically infeasible site conditions.

***6. Question* - What role does the "maximum extent feasible" standard play for ADA accessibility requirements in altered projects?**
***Answer* -** In an alteration project, the public agency must incorporate the ADA accessibility standards to the maximum extent feasible. Source: 28 CFR §35.151(b). The feasibility meant by this standard is physical possibility only. A public agency is exempt from meeting the ADA standards in the rare instance where physical terrain or site conditions restrict constructing or altering the facility to the standard. Source: ADA Accessibility Guidelines 4.1.6(1)(j).

Cost is not a factor in determining whether meeting standards has been completed to the maximum extent feasible. Source: DOJ's ADA Title II Technical Assistance Manual, § II-6.3200(3)-(4), 1993. *No particular decision making process is required to determine that an accessibility improvement is not technically feasible, but the best practice is to document the decision to enable the public agency to explain the decision in any later compliance review*. See Section 6.2.B.4 for additional information.

***7. Question* - Can flush mounted utility valve boxes, junction boxes, manholes, etc. be located in a curb ramp surface, side flare, or landing?**
***Answer* -** Yes, existing utilities may be located within the pedestrian access route, if necessary. However, the box cover or manhole surface must be stable, firm, slip-resistant and flush with the adjacent surface. Proposed utilities must be placed outside of the pedestrian access route. See Section 6.5.B for additional information.

***8. Question* - Can utility, signal, or sign poles, fire hydrants, etc. be located in curb ramp side flares as long as lateral clearances for accessibility are met?**
***Answer* -** If necessary, yes. All attempts to relocate vertical obstructions to provide full accessibility should be attempted and easy to relocate features such as a sign pole can be readily relocated in most cases without adversely affecting its function on the street. There is no provision in the ADA to require moving existing utilities or acquiring new right-of-way for alteration work.

There are also several curb ramp design types that do not feature side flares that may be utilized to meet existing site conditions and help to prevent keeping poles or other undesired features from being located in the pedestrian curb ramp walkway. Side flare curb ramp types are generally utilized where pedestrians would have the need to laterally cross the ramp or for a wheelchair to make a turning movement. Providing appropriate lateral accessibility clearance** at a pole (post, fire hydrant, street tree, etc.) location would be necessary. Curb ramps with returned curbs may be used where pedestrian traffic would not normally be expected to walk across the ramp.

** The minimum clear width ground space for an accessible route for single point access is 815 mm (32 in), for a maximum length of 24 in, to accommodate single wheelchair passage (ADAAG 4.2.1). The remainder of the accessible route is 915 mm (36 in) minimum clear width (ADAAG 4.3.3). PROWAG requires a minimum 1220 mm (48 in) pedestrian access route. Recommended guideline: The **1220 mm (48 in) dimension should be used** as the desired minimum single point access dimension whenever possible due to the probability of multiple pedestrians. Pedestrian access route should not be confused with sidewalk width.

Alteration projects that include the installation of or relocation of poles, posts, street trees, fire hydrants, or other types of street furniture on or near existing pedestrian pathways must provide the required accessibility clearances designated for a pedestrian access route. See Section 6.5.B for additional information.

***9. Question* - New curb ramps are being installed at an existing developed corner. New construction standards require the curb ramp to be within the crosswalk, but an existing underground utility vault is located where the ramp should be. Must the utility vault be moved?**
***Answer* -** The scope of the project will determine the answer. If utilities are being moved for other reasons within the project limits, it may be possible to alter or relocate the vault. If project construction will not involve the vault, it may be technically infeasible to position the curb ramp at an optimal location. It may also be possible to widen the crosswalk markings to include the curb ramp.

***10. Question* - What if the curb ramp can be placed over the vault, but the access cover would be located on the curb ramp?**
***Answer* -** If the access cover must be located on the curb ramp, it should meet the surface requirements of the pedestrian access route (stable, firm, slip-resistant and flush with the adjacent surface). See Section 6.5.B for additional information.

***11. Question* - If existing diagonal curb ramps are present or proposed, should crosswalk striping be included in the project?**
***Answer* -** Diagonal curb ramps should be proposed sparingly in areas where pedestrian traffic is moderate to high. All curb ramps are to have a minimum 1220 mm (48 in) clear space (overrun area) on the street at the bottom of the curb ramp in order for wheelchair users to maneuver and change direction to cross the street in the direction of pedestrian traffic. Crosswalk configurations indicated in Publication 72M, *Roadway Construction Standards*, RC-67M encompass this clear space and provide some degree of safety to the pedestrian while maneuvering across the street. Although the written guidance in this chapter does not indicate that a diagonal curb ramp requires the installation of a crosswalk, as a safety consideration, new crosswalk striping should be added to projects in medium to high pedestrian traffic areas to create the necessary clear space (overrun area) within the crosswalk configuration.

***12. Question* - Is it acceptable to retain a drainage inlet or manhole in place where a pedestrian with a disability could cross them?**
Answer* -** If necessary, yes. The ADA does not desire to prevent these existing crossings except for new construction where they can be addressed in design. Remember that the ground surface for any accessible route must be stable, firm and slip-resistant. Grates and manhole covers must also be flush with the adjacent surface. Every effort should be made to position the ramp surface direction so that the pedestrian does not have to cross an inlet. The ADAAG makes provision for the appropriate grate type that is permissible in an accessible route walking surface. Note: The reduced opening size for ADA accessible grates may greatly reduce the hydraulic efficiency for the street inlet and increase the accumulation of debris at the inlet.

*** If gratings are located in walking surfaces, then they must have spaces no greater than 13 mm (0.5 in) wide in one direction. If gratings have elongated openings, then they must be placed so that the long dimension is perpendicular to the dominant direction of travel. See Section 6.5.B for additional information.

***13. Question* - Do we need to install a curb ramp at street locations where the adjacent roadway or gutter slopes exceed the ADAAG standard of 1V:20H (5.00%)?**
***Answer* -**Yes. The ADAAG is basically written for new construction where these issues can be addressed and avoided in design. In the original ADAAG, curb ramps were to be installed where an accessible route crossed a roadway; however, this provision has been greatly expanded in later years to where curb ramps are expected at every curbed roadway intersection where sidewalks enter the street. In an existing right-of-way that is not otherwise being altered, the minimum requirement for achieving program accessibility is the installation of curb ramps at selected locations where existing pedestrian walkways cross curbs. Even on steep sites, pedestrians using motorized wheelchairs or being assisted in traveling can use curb ramps and a connection to the street crossing should be available if there is a pedestrian walkway.

U.S. DOJ ADA Title II, Technical Assistance Manual Guidance – II-6.6000 Curb ramps. "When streets, roads, or highways are newly built or altered, they *must* have ramps or sloped areas *wherever there are curbs* or other barriers to entry from a sidewalk or path. Likewise, when new sidewalks or paths are built or altered, they *must* contain curb ramps or sloped areas *wherever they intersect with streets, roads, or highways*."

If it is not possible to install a curb ramp that is fully compliant with ADAAG in an existing sidewalk, each feature of accessibility should be maximized within the constraints of the site conditions at that location. Every decision must be arrived at individually, after considering the effects of contributing factors for the given site conditions based on the following guideline:

Alterations must follow the ADA Standards for Accessible Design unless compliance is technically infeasible. Where the nature of an existing facility makes it virtually impossible to comply with all of the accessibility standards applicable to planned alterations, any altered features of the facility that can be made accessible must be made accessible.

Additionally, because alterations to existing rights-of-way offer fewer opportunities to mitigate the effects of topography and to incorporate maneuvering space and other accessibility features, accessibility guidelines include less stringent technical criteria for some conditions, such as a steeper permitted slope for a curb ramp where it may be technically infeasible to meet new construction requirements. Alterations, however, may not be undertaken that have the effect of reducing existing levels of accessibility below the requirements for new construction.

***14. Question* - Curb ramp alteration work must transition to the adjacent existing sidewalk width and cross slope at some point. Is there a limit to the length of adjacent sidewalk that should be replaced?**
***Answer* -** The curb ramp must be constructed to meet the standards. The transition to the existing sidewalk width and cross slope will be as per Publication 72M, *Roadway Construction Standards*, RC-67M. The transition may not meet the standards but is intended to serve as temporary connection until the substandard sidewalk can be addressed in a subsequent project. See Section 6.3.D for additional information.

***15. Question* - A multi-block length of roadway is being resurfaced. The intersection corners have curb ramps that meet some but not all of the current design guidelines. For example, the cross slope may be too steep or the curb ramps do not have detectable warnings. Must the curb ramps be reconstructed to the latest guidelines as part of the resurfacing project?**
***Answer* -** Yes, if it is technically feasible to provide the complying facilities. The work should be done at the same time the resurfacing is being done. See Section 6.2.B for additional information.

***16. Question* - One corner of an intersection is being altered by curb and gutter reconstruction and paired curb ramps are being installed as part of this project. The other three corners of the intersection are not being altered. Must new upgraded curb ramps be provided at the unaltered corners as part of this work?**
***Answer* -** No. The scope of the project requires new upgraded curb ramps *only at the altered corner*. (Note: The ramps of the unaltered corner must be added to the transition plan.) See Section 6.2.B for additional information.

***17. Question* - What activities are not considered to be alterations?**
***Answer* -** The DOJ does not consider maintenance activities, such as filling potholes, to be alterations. The DOJ does consider *resurfacing to be an alteration.* Source: DOJ's ADA Title II Technical Assistance Manual, § II-6.6000, 1993.

The FHWA has determined that maintenance activities include actions that are intended to preserve the system, retard future deterioration and maintain the functional condition of the roadway without increasing the structural capacity. These activities include, but are not limited to, thin surface treatments (nonstructural), joint repair, pavement patching (filling potholes), shoulder repair, signing, striping, minor signal upgrades and repairs to drainage systems. See Section 6.2.B.3 for additional information.

***18. Question* - Does a project altering a public right-of-way require simultaneous accessibility improvements?**
***Answer* -** Yes. An alteration project must be planned, designed and constructed so that the accessibility improvements within the scope of the project occur at the same time as the alteration. Source: 29 CFR § 35.151; Kinney v. Yerusalim**,** 9 F.3d 1067 (3d Cir. 1993), cert. denied, 511 U.S. 1033 (1994).

The ADA does not stipulate how to perform simultaneous accessibility improvements. For example, a public agency may select specialty contractors to perform different specialized tasks prior to completion of the alteration project or concurrently with an ongoing project.

***19. Question* - Will it be necessary to modify Highway Occupancy Permit drawings if changes to curb ramps impact crosswalks and stop bar locations?**
***Answer* -** The need to provide new or additional pedestrian access along and across existing highways as a result of new adjacent property development will require the approval and issuance of a PennDOT Highway Occupancy Permit (HOP) to the local government or adjacent property owner. The HOP elements may include the need for ADA accessibility facilities. PennDOT has the oversight responsibility for ADA accessibility within our roadway right-of-way including all HOP sites. Permit approvals should include the appropriate review of proposed accessibility facilities to meet approved standards and also require appropriate construction inspection to insure all permit accessibility standards have been met.

It is recommended that alterations to an existing HOP that creates substantial revisions to the functional use of the curb ramp, crosswalk configuration, or stop bar locations should be recorded by an acceptable method and become part of the HOP file. See Section 6.2.B.1.b for additional information.

D. Elements of Accessible Design - New Construction.

***1. Question* - Is there a specific static coefficient of friction required for a surface to be "slip resistant?"**
***Answer* -** Recommended static coefficients of friction for walking vary. OSHA recommends that walking surfaces have a static coefficient of friction of 0.5. The U.S. Access Board recommends a static coefficient of friction of 0.6 for accessible routes and 0.8 for ramps. However, there are a variety of ways to measure the coefficient of friction for different materials and no single test device or procedure has been identified by the U.S. Access Board. Without a defined test procedure, these friction values cannot be applied. It is recommended to use products that are identified by the manufacturer as having a "slip resistant" surface. See Section 6.5.A.1 for additional information.

***2. Question* - Will a standard provision be developed to require contractors to remove and replace curb ramps at their own expense if a new curb ramp installation does not meet criteria?**
***Answer* -** No. Construction inspection and approval of all construction activities remain the responsibility of the Department and ADA improvements should be given the same degree of importance as any other highway construction item. Each contract accessibility feature should be field inspected, measured and approved to ensure that the proper construction details and specifications have been appropriately met. Accessibility facilities not meeting the approved standards as determined by Department construction personnel will require the contractor to remove and replace the facility until they are in conformance to the construction standards.

For alteration projects, the ADA facilities will be constructed to the maximum extent feasible within the scope of the alteration. Construction contracts will not receive final acceptance until all accessibility facilities are approved by the Department.

E. Temporary Routes for Alteration Project Accessibility.

***1. Question* - How will alteration construction activities affect existing ADA accessibility?**
***Answer* -** Any construction activity required for alterations that affect existing pedestrian circulation paths will require the provision of a safe, alternate and accessible pedestrian route around the construction activity. The alternate route around the work zone must comply with all applicable accessibility guidelines to the maximum extent feasible so that the usability of the accessible route is maintained. The alternate route will be kept in place through the duration of the construction activity. See Section 6.14 for additional information.

F. Maintenance Issues.

***1. Question* - Are maintenance operations considered alterations for the purpose of the ADA?**
***Answer* -** The DOJ does not consider normal maintenance activities, such as filling potholes, to be alterations. The DOJ does consider *resurfacing beyond normal maintenance to be an alteration.* Source: DOJ's ADA Title II Technical Assistance Manual, § II-6.6000, 1993.

The FHWA has determined that maintenance activities include actions that are intended to preserve the system, retard future deterioration and maintain the functional condition of the roadway without increasing the structural capacity. These activities include, but are not limited to, thin surface treatments (nonstructural), joint repair, pavement patching (filling potholes), shoulder repair, signing, striping, minor signal upgrades and repairs to drainage systems. See Section 6.2.B.3 for additional information.

***2. Question* - Do maintenance activities require simultaneous improvements of the facility to meet ADA standards?**
***Answer* -** No. Maintenance activities do not require simultaneous improvements to pedestrian accessibility under the ADA and Section 504. However, in the development of the maintenance scope of work identified accessibility needs should be incorporated into the transition process. See Section 6.2.B.3 for additional information.

***3. Question* - What obligation does a public agency have regarding snow removal in its walkways?**
***Answer* -** A public agency must maintain its walkways in an accessible condition, with only isolated or temporary interruptions in accessibility. Source: 28 CFR §35.133. Part of this maintenance obligation includes reasonable snow removal efforts. See Section 6.6 for additional information.

***4. Question* - What day-to-day maintenance is a public agency responsible for under the ADA?**
Answer - As part of maintenance operations, public agencies' standards and practices must ensure that the *day-to-day operations keep the path of travel on pedestrian facilities open and usable for persons with disabilities, throughout the year. This includes snow removal, as noted above, as well as debris removal, maintenance of accessible pedestrian walkways in work zones and correction of other disruptions*. Source: ADAAG 4.1.1(4). See Section 6.6 for additional information.

INTENTIONALLY BLANK

BLANK PAGE

CHAPTER 6, APPENDIX A

TECHNICALLY INFEASIBLE FORM

(05-08)

pennsylvania
DEPARTMENT OF TRANSPORTATION

ADA Technically Infeasible Form

***Facility Type**

- ☐ Curb Ramp
- ☐ Sidewalk
- ☐ Ped. Push Button
- ☐ Ped. Signal
- ☐ Other _____

Forward All Completed Forms to PennDOT Construction

Justification for Technically Infeasible

(check all that apply)

- ☐ Limited Right-of-Way
- ☐ Existing Utilities
- ☐ Structures, Buildings, Vaults
- ☐ Historic Areas
- ☐ Environmental Areas
- ☐ Grade Separations
- ☐ Other 1 _____
- ☐ Other 2 _____
- ☐ Other 3 _____
- ☐ Other 4 _____

General Information

***District:** _____
***County:** _____
***Twshp/Boro:** _____
Project ECMS # _____

Submitter Information

Submitted By: _____
***Submitter Company:** _____
Street Address _____
City State Zip _____
Telephone _____
***Date Submitted:** _____

Project Information

Project Type

- ☐ Resurfacing Project
- ☐ Signal Project
- ☐ Widening Project
- ☐ Reconstruction
- ☐ New Construction (Tech Infeasible normally N/A)
- ☐ Other _____

Pedestrian Traffic	☐ Yes	☐ No
Pedestrian Trip Generators	☐ Yes	☐ No
Safety Concerns	☐ Yes	☐ No
R9-3A "No Peds" Signs	☐ Yes	☐ No
Existing Crosswalk	☐ Yes	☐ No
Existing Sidewalk	☐ Yes	☐ No
Existing Push Buttons	☐ Yes	☐ No

ADT _____

Location Identification

**SR North - Segment* _____

**SR South - Segment* _____

**SR East - Segment* _____

**SR West - Segment* _____

Use Graphic to ID

Location # _____

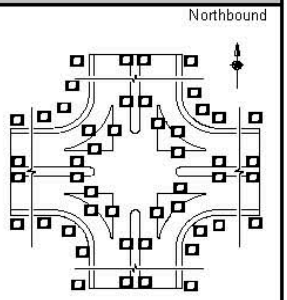

Investigated design alternatives	Why alternative was not selected
1.)	
2.)	
3.)	

Alternative selected and description of what requirement is not met

ADA Review Committee Recommendation

- ☐ Approved
- ☐ Denied

ADA Review Committee Chair - Date

ADE of Design Approval Status

- ☐ Approved
- ☐ Denied

District ADE of Design - Date

TIF #:

*(TIF Number automatically assigned. All fields marked with * provide data for TIF #)*

CHAPTER 6, APPENDIX B

FUNDING SCENARIOS

Chart 1

State Project - 100% State Funded

Municipality Willing To Participate

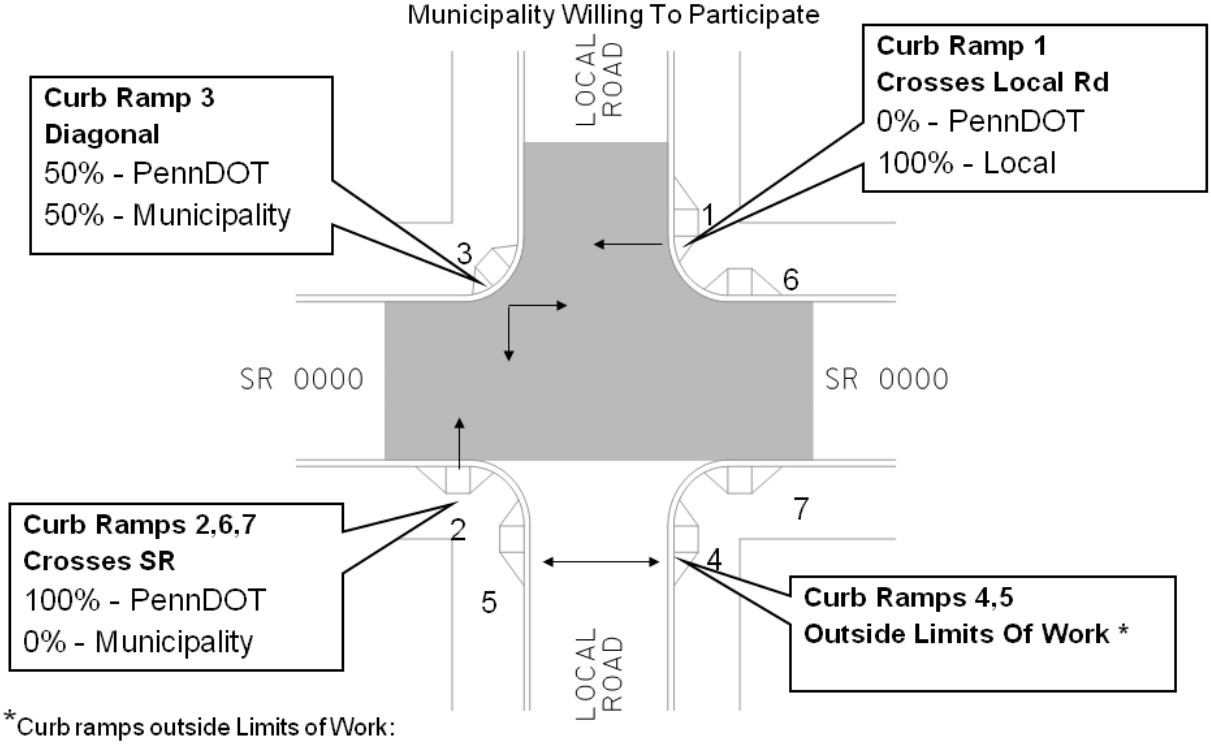

*Curb ramps outside Limits of Work:

- Are encouraged to be upgraded.
- Must be upgraded if impacted by the upgrade of other curb ramps.

Chart 2

State Project – 100% State Funded

Municipality **NOT** willing to participate

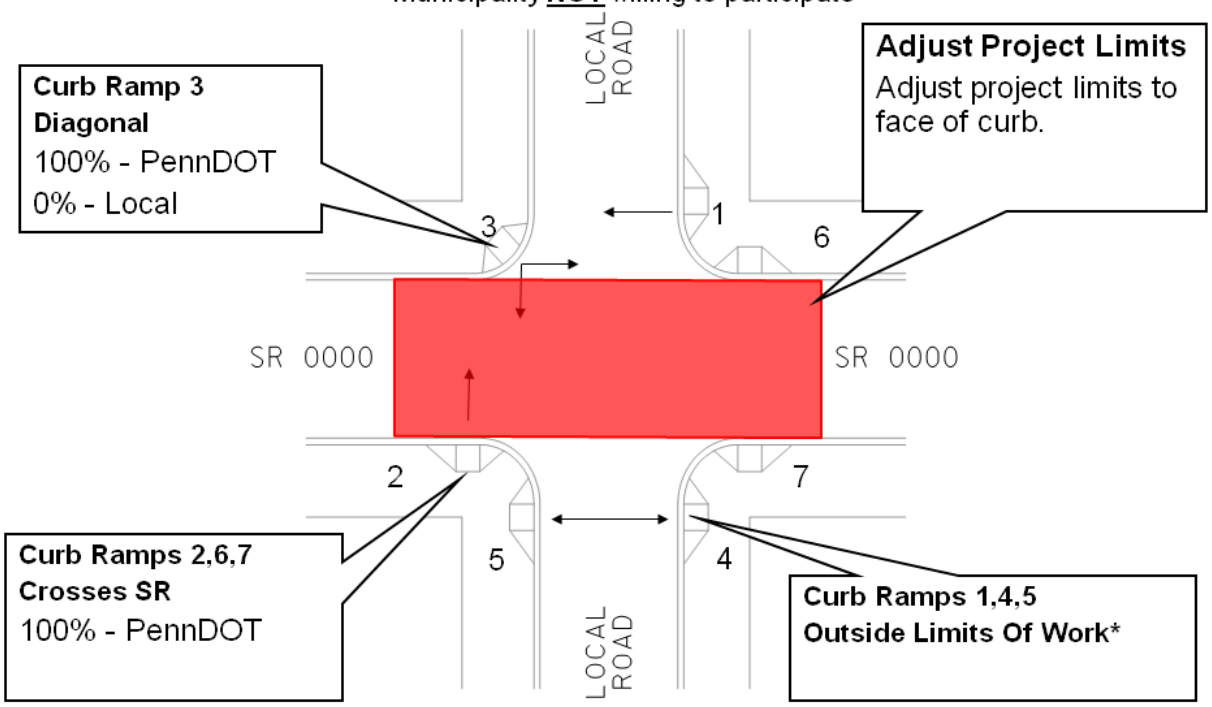

*Curb ramps outside Limits of Work:

- Are encouraged to be upgraded.
- Must be upgraded if impacted by the upgrade of other curb ramps.

Chart 3

State Project - Federal and State Funded

Municipality willing to participate

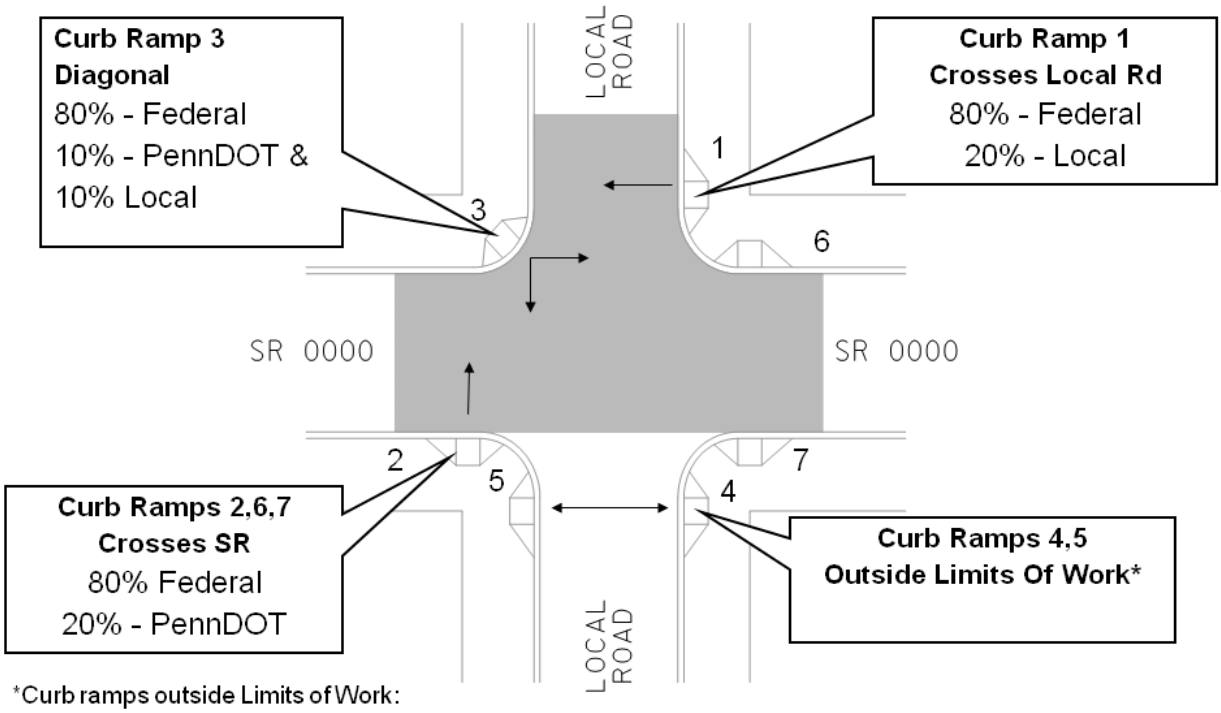

*Curb ramps outside Limits of Work:

- Are encouraged to be upgraded.
- Must be upgraded if impacted by the upgrade of other curb ramps.

Chart 4

State Project - Federal and State Funded

Municipality **NOT** willing to participate

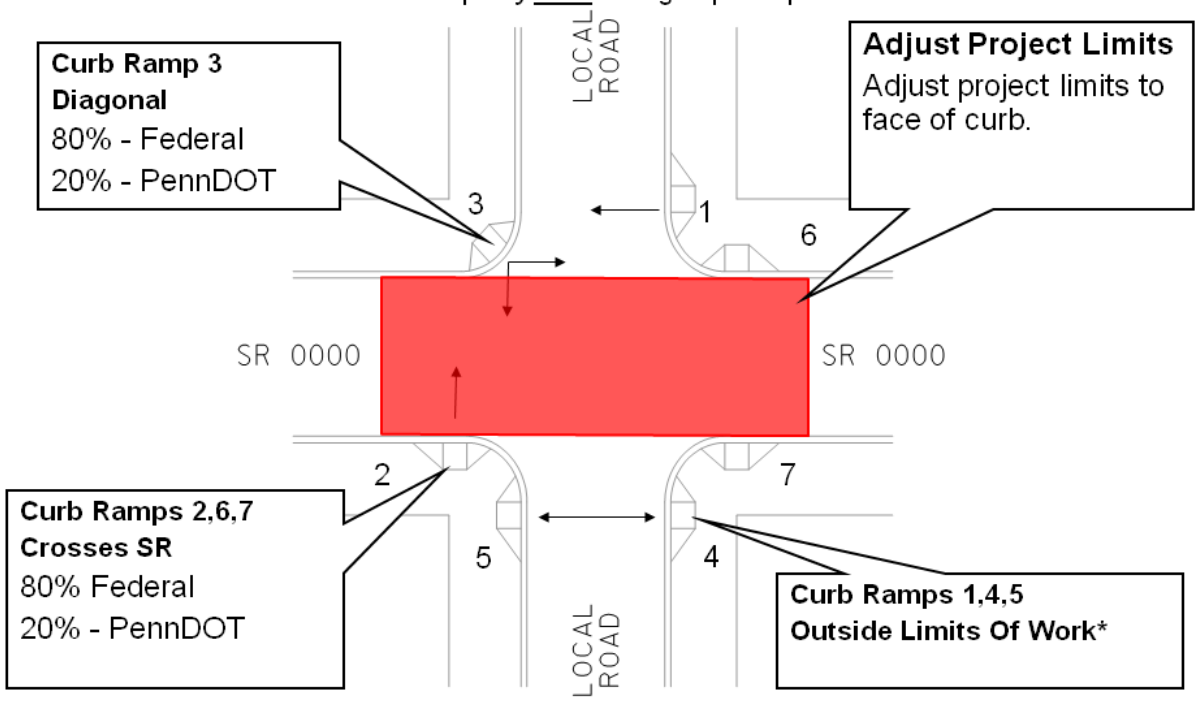

*Curb ramps outside Limits of Work:

- Are encouraged to be upgraded.
- Must be upgraded if impacted by the upgrade of other curb ramps.

Chart 5

State Project – 100% Federally Funded

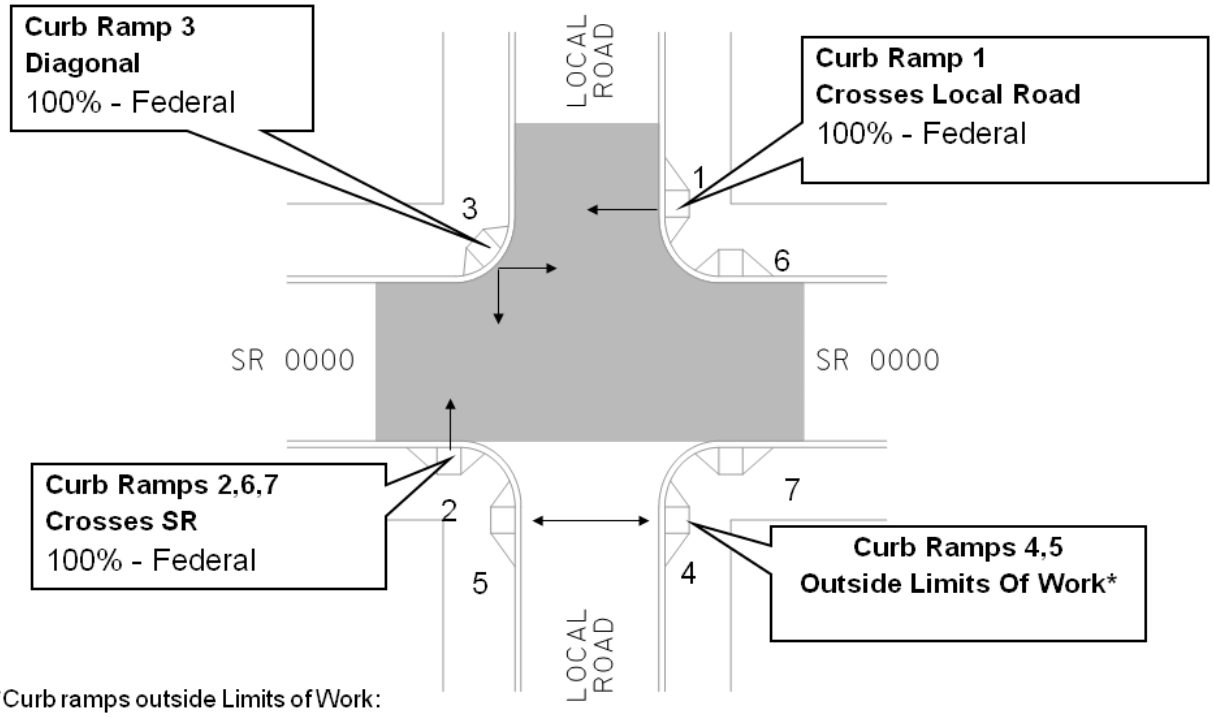

*Curb ramps outside Limits of Work:

- Are encouraged to be upgraded.
- Must be upgraded if impacted by the upgrade of other curb ramps.

Chart 6

Local Project – 100% Federally Funded

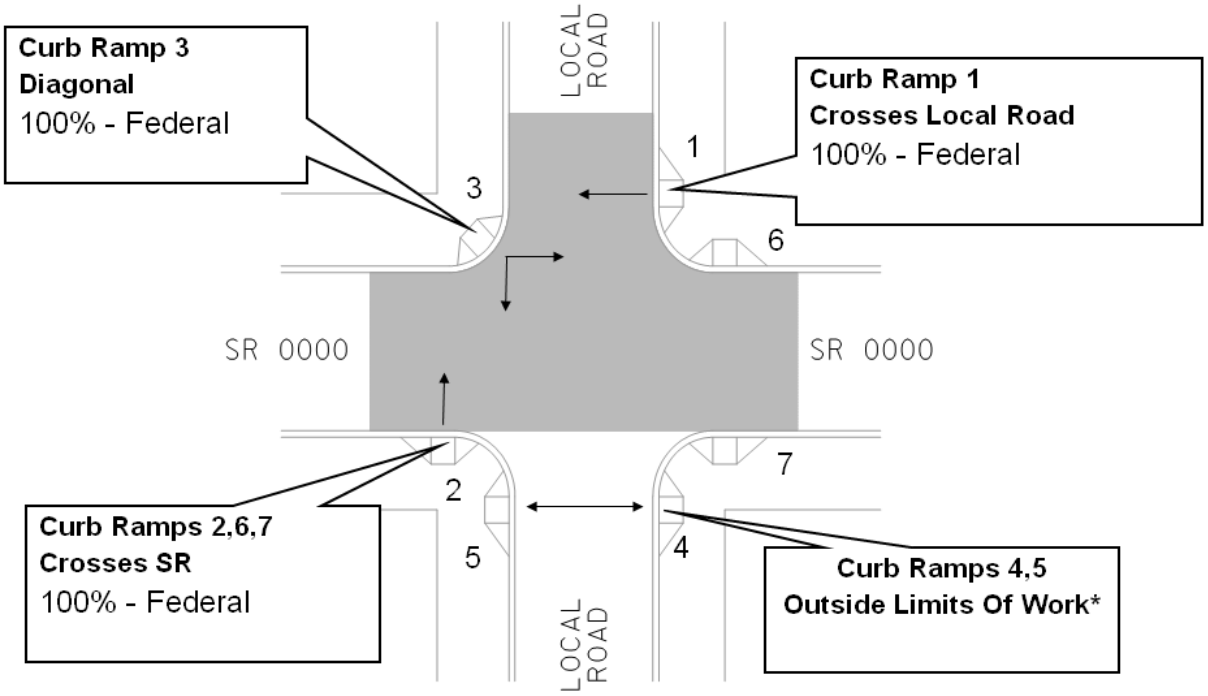

*Curb ramps outside Limits of Work:

- Are encouraged to be upgraded.
- Must be upgraded if impacted by the upgrade of other curb ramps.

BLANK PAGE

CHAPTER 6, APPENDIX C

REIMBURSEMENT AND MAINTENANCE AGREEMENT

Table 6.C.1
Summary of Letters and Agreements

Attachment "A"	**Notice of Future PennDOT Construction Project with Americans with Disabilities Act Accessibility Issues (standard letter).**
Attachment "B"	**Construction and Maintenance of Americans with Disabilities Act Compliant Pedestrian Facilities (standard letter).**
Attachment "C"	**Maintenance of Pedestrian Facilities to Meet Americans with Disabilities Act Requirements (standard letter).**
Attachment "D"	**Reimbursement and Maintenance Agreement (legal agreement).**
Attachment "E"	**Sidewalk Maintenance Agreement (legal agreement).**
Attachment "F"	**PennDOT/Municipality Funding Scenario Flowchart.**

– ATTACHMENT "A" –

(Date)

Municipality Contact Person
Municipality Name
Street Address
City, State Zip Code

Subject: Notice of Future PennDOT Construction Project with Americans with Disabilities Act Accessibility Issues
County:
Municipality Name
SR , Section
Project Length:
Project Name:
MPMS Number:

Dear Municipality Contact Person:

The Pennsylvania Department of Transportation is planning a roadway alteration project within your city/township/borough which will affect the use of the public right-of-way.

The Americans with Disabilities Act (ADA) of 1990 is a civil rights statute that prohibits discrimination against people with disabilities. ADA implementing regulations for Title II prohibit discrimination in the provision of services, programs, and activities by state and local governments. Designing and constructing pedestrian facilities in the public right-of-way that are not usable by people with disabilities may constitute discrimination. Section 504 of the Rehabilitation Act of 1973 (504) includes similar prohibitions in the conduct of federally-funded programs.

To meet the requirements of the ADA, all projects affecting the use of pedestrian accessible routes in the public right-of-way must incorporate pedestrian access improvements within the scope of the project. Specifically, all pedestrian facilities within the scope of the project must be improved to meet the current ADA standards and any locations missing a required pedestrian facility must have a pedestrian facility installed during construction of the project.

We desire to meet with you within the next two weeks to discuss ADA accessibility issues, appropriate cost sharing, utility or right-of-way concerns, and future maintenance responsibilities for this project. The individual listed below will contact you within two weeks to set-up a meeting date.

– ATTACHMENT "A" –

Please direct all correspondence to the following contact:

PennDOT Engineering District 0-0
Contact Person
Street Address
City, State Zip Code
Telephone: (000) 000-0000
E-mail: xxxxx@pa.gov

Sincerely,

Project Manager's Name
Title

– ATTACHMENT "B" –

(Date)

Municipality Contact Person **VIA CERTIFIED MAIL**
Municipality Name
Street Address
City, State Zip Code

RE: Construction and Maintenance of Americans with Disabilities Act Compliant Pedestrian Facilities

Dear Municipality Contact Person:

As discussed in our meeting on (Date), the Pennsylvania Department of Transportation (Department) plans to improve SR ____ through roadway alterations or resurfacing at the intersection of (Street Name), which is under the jurisdiction of (Municipality Name). To meet current accessibility standards required by the Americans with Disabilities Act (ADA), altered pedestrian facilities must meet the latest standards.

Scenario #1 – PennDOT and Municipal Share Construction Efforts

☐ It was determined at the meeting referenced above that (Municipality Name) will construct or improve pedestrian facilities that service local streets on its own accord rather than have the Department include the pedestrian facilities as part of its project. The Department will construct the remaining pedestrian facilities as part of its project.

The Department acknowledges that (Municipality Name) will construct or improve pedestrian facilities at the intersection of SR _____ and (Street Name) which meet the standards for pedestrian accessibility required by the Americans with Disabilities Act Accessibility Guidelines (ADAAG), 28 CFR Part 36, as amended, and that the construction will be completed by or immediately after completion (within __ months) of the Department's project.

The Department acknowledges its intent to construct or improve pedestrian facilities at the intersection of SR ___ and (Street Name) which meet the standards for pedestrian accessibility required by the Americans with Disabilities Act Accessibility Guidelines (ADAAG), 28 CFR Part 36, as amended, and that the construction will be completed as part of the Department's project.

Scenario #2 – PennDOT Performs All Construction

☐ It was determined at the meeting referenced above that the Department will construct or improve all pedestrian facilities as part of its project.

The Department acknowledges its intent to construct or improve pedestrian facilities at the intersection of SR___ and (Street Name) which meet the standards for pedestrian accessibility required by the Americans with Disabilities Act Accessibility Guidelines (ADAAG), 28 CFR Part 36, as amended, and that the construction will be completed as part of

– ATTACHMENT "B" –

the Department's project.

Scenario #3 – Municipality Performs All Construction

☐ It was determined at the meeting referenced above that (Municipality Name) will construct or improve all pedestrian facilities as part of its project.

(Municipality Name**)** acknowledges its intent to construct or improve pedestrian facilities at the intersection of SR __ and (Street Name) which meet the standards for pedestrian accessibility required by the Americans with Disabilities Act Accessibility Guidelines (ADAAG), 28 CFR Part 36, as amended, and that the construction will be completed by or immediately after completion (within ___ months) of the Department's project.

Financial Responsibilities

The constructed or improved pedestrian facilities that service the local streets will be constructed at (Municipality Name's) expense. The constructed or improved pedestrian facilities that service state routes will be constructed at the Department's expense. The constructed or improved pedestrian facilities that service both local and state routes will be constructed at a shared 50/50 cost and expense.

Maintenance Responsibilities

According to the State Highway Law of 1945, as amended, (Municipality Name) is responsible for maintaining structures located outside of the highway curb lines. Therefore, (Municipality Name) will be responsible for the year-round maintenance and repair of the new pedestrian facilities. The Department in no way assumes or acknowledges any jurisdiction over the pedestrian facilities or the responsibility for the maintenance and future repair of the pedestrian facilities upon their completion.

Thank you for your attention to this matter. If you have any questions, please contact (Contact Person) at (000) 000-0000.

Sincerely,

Project Manager's Name
Title

– ATTACHMENT "C" –

(Date)

Municipality Contact Person **VIA CERTIFIED MAIL**
Municipality Name
Street Address
City, State Zip Code

RE: Maintenance of Pedestrian Facilities to Meet Americans with Disabilities Act Requirements

Dear Municipality Contact Person:

As indicated in the letter dated (Date), the Pennsylvania Department of Transportation (Department) plans to improve SR ___ through roadway alterations or resurfacing at the intersection of (Street Name), which is under the jurisdiction of (Municipality Name). To meet current accessibility standards required by the Americans with Disabilities Act (ADA), altered pedestrian facilities must meet the latest standards at the intersection. It has been determined that (Municipality Name) is not willing to sign an agreement with the Department to set forth cost reimbursement and maintenance obligations for the pedestrian facilities.

In the absence of an agreement, the Department will proceed with the construction of the pedestrian facilities as part of its roadway reconstruction project. PennDOT will only address curb ramps along local streets for which the pedestrian path is negatively impacted by the construction of curb ramps along state routes.

According to the State Highway Law of 1945, as amended, (Municipality Name) is responsible for maintaining structures located outside of the highway curb lines. Therefore, upon completion of construction, (Municipality Name) will be responsible for the year-round maintenance and repair of the pedestrian facilities. By constructing the pedestrian facilities to provide ADA compliance, the Department in no way assumes or acknowledges any jurisdiction over the pedestrian facilities or the responsibility for the maintenance and future repair.

Thank you for your attention to this matter. If you have any questions, please contact (Contact Person) at (000) 000-0000.

Sincerely,

Project Manager's Name
Title

– ATTACHMENT "D" –

Municipality: _____ Agreement #: _____
Federal ID #: _____ Project (SR & Sec): _____
SAP Vendor #: _____ MPMS #: _____

REIMBURSEMENT & MAINTENANCE AGREEMENT

THIS AGREEMENT, made and entered into this _____ day of _____, 20___, by and between the Commonwealth of Pennsylvania, acting through the Pennsylvania Department of Transportation (PENNDOT), hereinafter called the COMMONWEALTH,

a n d

_____, a political subdivision duly and properly formed under the laws of the Commonwealth of Pennsylvania, acting through its proper officials, hereinafter called the MUNICIPALITY.

W I T N E S S E T H:

WHEREAS, the COMMONWEALTH has under its jurisdiction SR _____, located in _____, _____ County; and,

WHEREAS, the COMMONWEALTH plans to improve SR _____, from Segment _____ Offset _____ to Segment _____ Offset _____, through roadway alterations or resurfacing, hereinafter referred to as the PROJECT, as more fully described on Exhibit "A," which is attached hereto and made part of this Agreement; and,

WHEREAS, SR_____ intersects with (a) street(s) under the jurisdiction of the MUNICIPALITY; and,

WHEREAS, all pedestrian facilities altered by a roadway alteration or construction project must be updated to current accessibility standards required by the Americans with Disabilities Act (ADA); and,

WHEREAS, to meet the ADA requirements, the COMMONWEALTH will remove the existing pedestrian facility(ies) at the intersection(s) of State Route _____ and _____, and install new pedestrian facilities as part of the PROJECT, hereinafter referred to as the PEDESTRIAN FACILITIES; and,

WHEREAS, the PEDESTRIAN FACILITIES will be installed to serve pedestrian traffic and must meet the design guideline standards for pedestrian accessibility required by the Americans with Disabilities Act Accessibility Guidelines (ADAAG), 28 CFR Part 36, as amended; and,

WHEREAS, the COMMONWEALTH is willing to construct the PEDESTRIAN FACILITIES as part of the PROJECT, subject to reimbursement by the MUNICIPALITY as set forth in Paragraph 3 below; and,

WHEREAS, the MUNICIPALITY is willing to reimburse the COMMONWEALTH for construction and inspection costs associated with the PEDESTRIAN FACILITIES, as detailed in this Agreement; and,

WHEREAS, upon completion of construction of the PEDESTRIAN FACILITIES, the MUNICIPALITY must assume year-round responsibility for maintenance of said PEDESTRIAN FACILITIES; and,

WHEREAS, the parties desire to enter into this Agreement to set forth the financial obligations and maintenance responsibilities for the PROJECT and the PEDESTRIAN FACILITIES.

NOW THEREFORE, for and in consideration of the foregoing premises and the mutual promises set forth below, the parties agree, with the intention of being legally bound, to the following:

1. The recitals set forth above are incorporated by reference as a material part of this Agreement.

2. The COMMONWEALTH, by contract or with its own forces, will construct the PROJECT and the PEDESTRIAN FACILITIES in accordance with the plans, specifications, and drawings prepared by or for the COMMONWEALTH, which are incorporated herein by reference as if physically attached hereto.

3. The COMMONWEALTH shall be responsible for all costs of the PROJECT other than the PEDESTRIAN FACILITIES. The MUNICIPALITY shall be responsible for the costs of the PEDESTRIAN FACILITIES as follows:

A. The MUNICIPALITY shall be solely responsible for the costs of PEDESTRIAN FACILITIES constructed to provide access across a local street under the jurisdiction of the MUNICIPALITY at the intersection of a state highway.

B. The MUNICIPALITY and the COMMONWEALTH shall be equally responsible for the costs of PEDESTRIAN FACILITIES constructed on the diagonal of an intersection which provide access across both a local street under the jurisdiction of the MUNICIPALITY and a state highway.

C. The COMMONWEALTH shall be solely responsible for the costs of PEDESTRIAN FACILITIES constructed at the intersection of two state highways.

4. The MUNICIPALITY shall pay to the COMMONWEALTH, by way of reimbursement, for all actual costs associated with construction of the PEDESTRIAN FACILITIES, including inspection costs, as tabulated on Exhibit "C," which is attached to and made part of this Agreement, estimated to be _____ ($XX,XXX.XX); and,

5. Upon completion of the PEDESTRIAN FACILITIES, the COMMONWEALTH shall send the MUNICIPALITY a written notice of completion and an invoice specifying the items constituting the total cost of the PEDESTRIAN FACILITIES for which it is responsible in accordance with Paragraph 3 above. The MUNICIPALITY shall make payment to the COMMONWEALTH in full through the Option circled below:

Option A:

The MUNICIPALITY shall make payment to the COMMONWEALTH in full within thirty (30) days of receipt of such invoice.

Option B:

The MUNICIPALITYshall, after receipt of such invoice, make monthly payments to the COMMONWEALTH for a period of one (1) year. The payments will be in equal amounts and total all costs due hereunder.

Option C:

The MUNICIPALITY shall make payment to the COMMONWEALTH in full after receiving the necessary funds from a Pennsylvania Infrastructure Bank (PIB) loan. The MUNICIPALITY shall make payment to the COMMONWEALTH in full within thirty (30) days of receipt of such loan, which must be no longer than sixty (60) days after completion of the Project.

Option D:

The MUNICIPALITY authorizes the COMMONWEALTH to withhold and apply so much of the MUNICIPALITY's Liquid Fuels Tax Fund allocation as necessary to reimburse the COMMONWEALTH in full for all costs due hereunder.

6. Upon receipt of the notice required by Paragraph 5 above, the MUNICIPALITY shall, at its sole cost and expense, be responsible for the year-round maintenance and repair of the PEDESTRIAN FACILITIES, which include, without limitation, clearing and removal of snow and ice and application of anti-skid or de-icing materials. The MUNICIPALITY may by ordinance transfer these responsibilities (both maintenance and future alteration required by ADAAG) to other parties but the MUNICIPALITY shall remain responsible for the enforcement of such ordinance. Additionally, the MUNICIPALITY shall, at its sole cost and expense, be responsible for all future alterations to the PEDESTRIAN FACILITIES required by the ADAAG. Nothing contained in this Agreement must be construed as an assumption or acknowledgement by the COMMONWEALTH of responsibility for the maintenance and future repair of the PEDESTRIAN FACILITIES.

7. The MUNICIPALITY, by executing this Agreement, certifies that it has on hand or will acquire sufficient funds to meet all of its obligations for the PEDESTRIAN FACILITIES as set forth in Paragraph 4.

8. If the MUNICIPALITY fails to perform any of the terms, conditions or provisions of this Agreement, including, but not limited to, any default of payment for a period of forty-five (45) days, the MUNICIPALITY authorizes the COMMONWEALTH to withhold so much of the MUNICIPALITY's Liquid Fuels Tax Fund allocation as may be necessary to reimburse the COMMONWEALTH in full for all costs due hereunder; and the MUNICIPALITY does hereby and herewith authorize the COMMONWEALTH to withhold such amount and to apply such funds or portion thereof, to remedy such default.

9. The MUNICIPALITY must indemnify, save harmless, and defend (if requested) the COMMONWEALTH, its officers, agents, and employees from all suits, actions, or

claims of any character, name, or description brought for on account of any injuries to or damages received or sustained by any person, persons or property by or from the MUNICIPALITY, its contractors, their officers, agents and employees as a result of the obligations assumed by the MUNCIPALITY under this Agreement.

10. Nothing contained in this Agreement shall be deemed to be a waiver by the COMMONWEALTH of its discretion to abandon or postpone the PROJECT.

11. The MUNICIPALITY agrees to comply with the *Contractor Integrity Provisions*, the *Commonwealth Nondiscrimination/Sexual Harassment Clause*, the *Provisions Concerning the Americans with Disabilities Act*, and the *Right-to-Know Law Provisions* which are attached hereto and made part hereof as Exhibits "D," "E," "F," and "G," respectively.

12. The MUNICIPALITYshall enact and/or adopt such ordinances and/or resolutions as may be necessary to effect the purposes of this Agreement.

13. The actions that the COMMONWEALTH is either required or authorized to perform pursuant this Agreement are not intended to enlarge, and must not be construed as enlarging, its obligations regarding maintenance and operation of the state highway system under either the State Highway Law, Act of June 1, 1945, P.L. 1242, as amended, 36 P.S. § 670-101 et seq., or the Act of September 18, 1961, P.L. 1389, No. 615, as amended, 36 P.S. § 1758-101 et seq.

14. This Agreement will not be effective until all necessary COMMONWEALTH officials as required by law have executed it. Following full execution, the COMMONWEALTH will insert the effective date at the top of Page 1.

IN WITNESS WHEREOF, the parties have executed this Agreement the date first above written.

ATTEST

_____
Title: DATE

MUNICIPALITY

BY_____
Title: DATE

If a Corporation, the President or Vice-president must sign and the Secretary, Treasurer, Assistant Secretary or Assistant Treasurer must attest; if a sole proprietorship, only the owner must sign; if a partnership, only one partner need sign; if a limited partnership, only the general partner must sign. If a Municipality, Authority or other entity, please attach a resolution.

DO NOT WRITE BELOW THIS LINE--FOR COMMONWEALTH USE ONLY

COMMONWEALTH OF PENNSYLVANIA
DEPARTMENT OF TRANSPORTATION

BY_____
Deputy Secretary for Highway Administration DATE

APPROVED AS TO LEGALITY AND FORM

BY_____
for Chief Counsel Date

BY_____
Deputy General Counsel Date

BY_____
Deputy Attorney General Date

FUNDS COMMITMENT DOC. NO._____
CERTIFIED FUNDS AVAILABLE UNDER
SAP NO. _____
SAP COST CENTER_____
GL ACCOUNT_____
AMOUNT_____

BY_____
for Comptroller Date

– ATTACHMENT "E" –

County(ies): _____ Agreement #: _____

Project Short Title: _____ MPMS #: _____

Project (SR &Sec): _____ Federal Aid ID#: _____

SIDEWALK MAINTENANCE AGREEMENT

THIS AGREEMENT, made and entered into this the _____ day of _____, 20___, between the Commonwealth of Pennsylvania, acting through the Department of Transportation, herein called PENNDOT,

and

_____, a political subdivision duly and properly formed under the laws of the Commonwealth of Pennsylvania, acting through its proper officials, hereinafter called the MUNICIPALITY.

W I T N E S S E T H:

WHEREAS, the need for sidewalk at the following location(s) has been determined appropriate:

County	*State Road*	*Beginning Segment/Offset*	*Ending Segment/Offset*

WHEREAS, the cost of constructing sidewalk at these locations is being partially or totally funded with state and/or federal funds; and,

WHEREAS, sidewalk is being installed to serve pedestrian traffic; and,

WHEREAS, the MUNICIPALITY has agreed, upon completion of the sidewalk construction, to assume year-round responsibility for maintenance of said sidewalk.

NOW, THEREFORE, in consideration of the premises, the mutual covenants hereinafter contained and with the intent to be legally bound hereby, the parties hereto agree as follows:

1. PENNDOT will, with its own forces or by contract, construct various improvements along state route _____ (_____) and install sidewalk in accordance with the plans prepared by PENNDOT, which are incorporated herein by reference as though physically attached.

2. Upon completion of said Project by PENNDOT or its contractor(s), PENNDOT will send to the MUNICIPALITY a written notice of completion.

3. Upon receipt of the notice, required by Paragraph 2 above, the MUNICIPALITY shall, at its sole cost and expense, be responsible for the year-round maintenance and repair of the sidewalk, which includes, without limitation, clearing and removal of snow and ice and application of anti-skid or de-icing materials. The MUNICIPALITY may by ordinance transfer these maintenance responsibilities to other parties but the MUNICIPALITY shall remain responsible for the enforcement of such ordinance.

4. PENNDOT shall have the right, at any given time, to terminate this Agreement by giving the MUNICIPALITY thirty (30) days' written notice. In the event of such termination, the MUNICIPALITY's responsibilities under this Agreement, except those of liability, whether financial, in tort or otherwise, shall terminate.

5. The MUNICIPALITY shall indemnify, save harmless, and defend (if requested) PENNDOT, its officers, agents, and employees from all suits, actions, or claims of any character, name, or description brought for on account of any injuries to or damages received or sustained by any person, persons or property by or from the MUNICIPALITY, its contractors, their officers, agents and employees as a result of the obligations assumed by the MUNCIPALITY under this Agreement.

6. If the MUNICIPALITY shall fail to perform any of the terms, conditions, and provisions of this Agreement, the MUNICIPALITY authorizes PENNDOT to withhold so much of the MUNICIPALITY's Liquid Fuels Tax Fund Allocation as may be needed to complete any necessary work and to reimburse PENNDOT in full for all costs due thereof, and does hereby and herewith authorize PENNDOT to withhold such amount and to apply such funds, or portion thereof, to remedy the default.

7. In the event that PENNDOT determines that certain repair, maintenance, or other required action is necessary with respect to the sidewalk, PENNDOT shall notify the MUNICIPALITY in writing. The MUNICIPALITY shall begin necessary work within five (5) days of receipt of PENNDOT's notice. In the event that the MUNICIPALITY fails to commerce necessary work within said five- (5-) day period

or fails to prosecute said work diligently to completion, PENNDOT may perform said repair, maintenance, or other necessary action at the MUNICIPALTY's sole cost and expense. Failure by the MUNICIPALITY to pay PENNDOT within forty-five (45) days of receipt of an invoice for work performed by PENNDOT shall constitute a default for purposes of Paragraph 6 of this Agreement.

8. RESOLUTIONS AND ORDINANCES

The MUNICIPALITY shall enact and/or adopt such ordinances and/or resolutions as may be necessary to effect the purposes of this Agreement.

9. NONDISCRIMINATION/SEXUAL HARRASSMENT CLAUSE

The MUNICIPALITY shall comply with the current version of the Commonwealth of Pennsylvania's Nondiscrimination/Sexual Harassment Clause, which is incorporated into this Agreement by reference as though physically attached.

10. CONTRACTOR INTEGRITY PROVISIONS

The MUNICIPALITY shall comply with the current version of the Commonwealth of Pennsylvania's Contractor Integrity Provisions, which are incorporated into this Agreement by reference as though physically attached.

11. AMERICANS WITH DISABILITIES ACT PROVISIONS

The MUNICIPALITY shall comply with the current version of the Commonwealth of Pennsylvania's Provisions Concerning the Americans with Disabilities Act, which are incorporated into this Agreement by reference as though physically attached.

12. RIGHT-TO-KNOW LAW

The Pennsylvania Right-to-Know Law, 65 P.S. §§ 67.101—3104, applies to this Agreement. Therefore, this Agreement is subject to, and the MUNICIPALITY shall comply with, the clause entitled Contract Provisions – Right to Know Law 8-K-1532, attached as Exhibit "A" and made a part of this Agreement. As used in this exhibit, the term "Contractor" refers to the MUNICIPALITY.

13. NOTICE

Notice under this Agreement shall be (a) by personal delivery; (b) by First Class Certified United States Mail, Return Receipt Requested, postage prepaid, or (c) by overnight delivery service having positive tracking, such as Federal Express or United Parcel Service. Notice shall be deemed given when received. The parties shall deliver notice to each other at the following addresses:

To DEPARTMENT:

_____

To MUNICIPALITY:

_____

or to such other address as either party may designate to the other in writing from time to time.

– ATTACHMENT "E" –

IN WITNESS WHEREOF, the parties have executed this Agreement the date first above written.

ATTEST

_____
Title: DATE

MUNICIPALITY

BY_____
Title: DATE

If a Corporation, the President or Vice-president must sign and the Secretary, Treasurer, Assistant Secretary or Assistant Treasurer must attest; if a sole proprietorship, only the owner must sign; if a partnership, only one partner need sign; if a limited partnership, only the general partner must sign. If a Municipality, Authority or other entity, please attach a resolution.

DO NOT WRITE BELOW THIS LINE--FOR COMMONWEALTH USE ONLY

COMMONWEALTH OF PENNSYLVANIA
DEPARTMENT OF TRANSPORTATION

BY_____
Deputy Secretary or Designee DATE

APPROVED AS TO LEGALITY
AND FORM

BY_____
for Chief Counsel Date

BY_____
Deputy General Counsel Date

BY_____
Deputy Attorney General Date

FUNDS COMMITMENT DOC. NO._____
CERTIFIED FUNDS AVAILABLE UNDER
SAP NO. _____
SAP COST CENTER_____
GL ACCOUNT_____
AMOUNT_____

BY_____
for Comptroller Operations Date

PennDOT/Municipality Funding Scenario

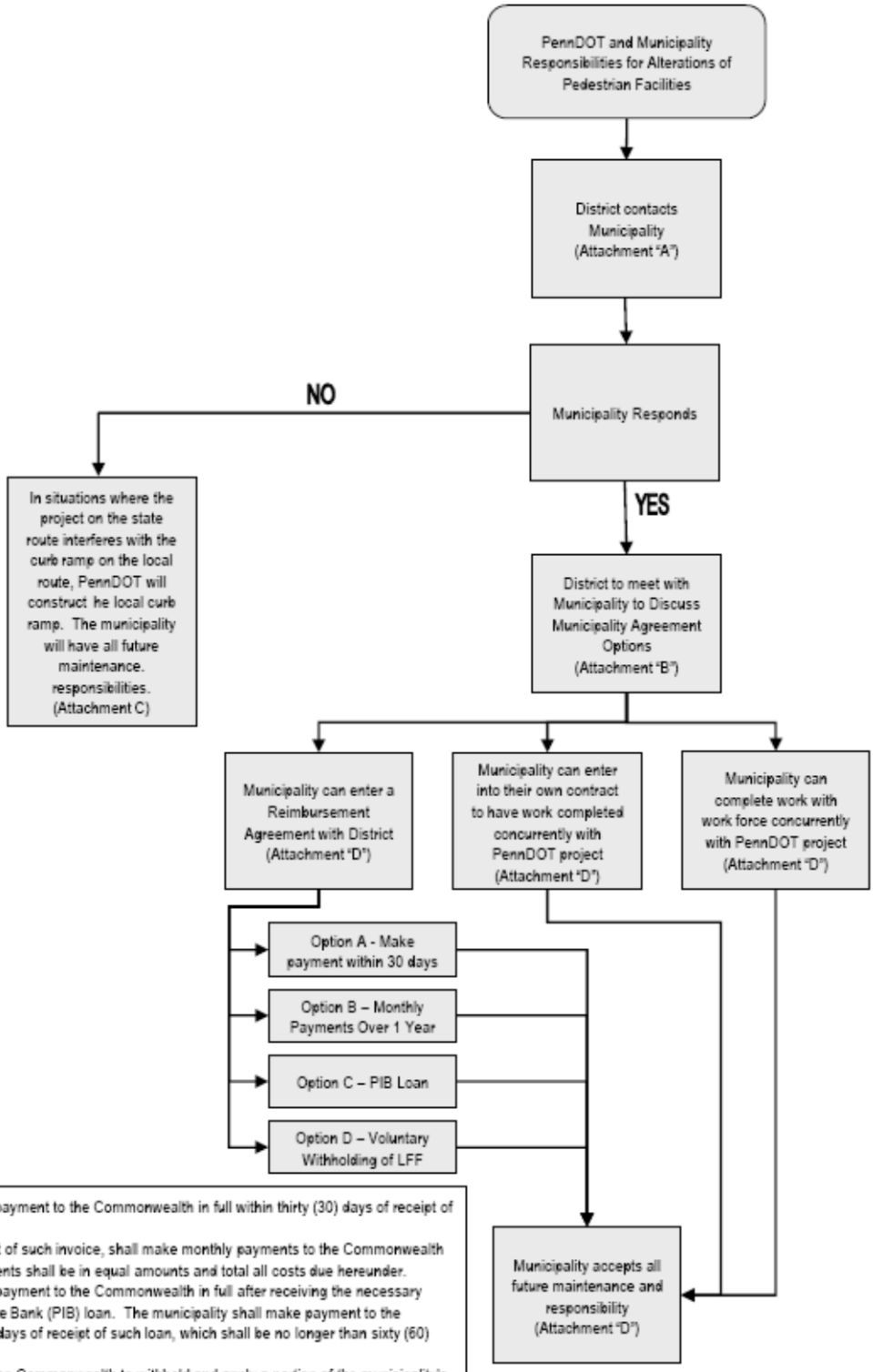

Option A: The municipality shall make payment to the Commonwealth in full within thirty (30) days of receipt of such invoice.
Option B: The municipality, after receipt of such invoice, shall make monthly payments to the Commonwealth for a period of one (1) year. The payments shall be in equal amounts and total all costs due hereunder.
Option C: The municipality shall make payment to the Commonwealth in full after receiving the necessary funds from a Pennsylvania Infrastructure Bank (PIB) loan. The municipality shall make payment to the Commonwealth in full within thirty (30) days of receipt of such loan, which shall be no longer than sixty (60) days after completion of the Project.
Option D: The municipality authorizes the Commonwealth to withhold and apply a portion of the municipality's Liquid Fuels Tax Fund allocation as necessary to reimburse the Commonwealth in full for all costs due hereunder.

December 5, 2011

CHAPTER 6, APPENDIX D

RIGHT-OF-WAY LETTERS

Property Owner
Property Address
Authorization to Enter Introduction

Dear Property Owner:

In the coming months, the Pennsylvania Department of Transportation (PennDOT) plans to improve S.R. through roadway and sidewalk alterations or resurfacing at the intersection of Street. PennDOT will be requesting an Authorization to Enter your property in order to repair and/or replace the current Pedestrian Facility in order to comply with the current standards set forth by the Americans with Disabilities Act (ADA).

The Americans with Disabilities Act (ADA) of 1990 is a Federal civil rights statute that prohibits discrimination against people with disabilities. ADA regulations prohibit discrimination in the provision of services, programs, and activities by state and local governments. Designing and constructing pedestrian facilities in the public right-of-way that are not usable by people with disabilities may constitute discrimination. Section 504 of the Rehabilitation Act of 1973 (504) includes similar prohibitions in the conduct of federally-funded programs.

In the coming weeks, a representative of PennDOT will be visiting homes in your municipality to further explain the Authorization to Enter form. PennDOT will not repair and/or replace the current Pedestrian Facility on your property or acquire property from you for that purpose if the Authorization to Enter is not executed.

Should you require any additional information, please contact at .

Sincerely,

District Executive
Engineering District -0

Property Owner
Property Address
Authorization to Enter Denied or Failure to Respond

Dear Property Owner:

This letter is a follow-up to your decision not to grant Authorization to Enter to the Pennsylvania Department of Transportation (PennDOT). This is in reference to repairing or replacing the publicly used Pedestrian Access Facility (sidewalks and curb ramps) that pertain to project and are located within your property located at .

PennDOT will not be repairing and/or replacing the current Pedestrian Facility on your property. Be advised that if there are any claims or proceedings in relation to the publicly used Pedestrian Access Facility located within your property, you could potentially be sued or added to a lawsuit.

Should you require any additional information, please contact at .

Sincerely,

District Executive
Engineering District -0

BLANK PAGE

CHAPTER 6, APPENDIX E

PEDESTRIAN STUDY DETERMINATION

Pedestrian Study Determination

General Information
Date: _____
District: _____
Submitted By: _____

Location Information
County: _____
Municipality: _____
SR and Section: _____
Segment/Offset: _____
Street Name: _____
Township Road: _____

Project Description:

Provide a brief project description and scope :

The need for pedestrian accommodations has been identified through the following procedures.

1. Factors identified from the Bike/Ped. Checklist	Yes	☐	No	☐
2. Local Comprehensive Planning	Yes	☐	No	☐
3. Included in project scope at programming	Yes	☐	No	☐
4. Critical safety need (Safety Review Committee concurrence)	Yes	☐	No	☐
Description:_____				
5. Municipal request	Yes	☐	No	☐
6. Field Observation	Yes	☐	No	☐
(i.e., connect pedestrian generators; observed pedestrian movements)				
Description:_____				
7. Are pedestrian accommodations needed?	Yes	☐	No	☐

If "Yes" then list the facilities that need upgraded and construct them according to DM-2 Ch. 6 and RC-67M. (Use Executive Summary)

If "No", explain in Executive Summary.

Note: If a pedestrian need has been determined and the construction of pedestrian facilities do not fall within the project scope or the alteration, then ADA features must be included on a Transition Plan and this project should not preclude or impede the inclusion of pedestrian facilities with future projects or development.

Executive Summary (Engineering Judgement/Recommendation) :

ADA Coordinator Concur
Signature _____

Design Engineer Concur
Signature _____

Project Manager Concur
Signature _____

ADE-Design Approval
Signature _____

FORM 6.1

CHAPTER 6, APPENDIX F

PARKING REMOVAL LETTERS

DATE

Municipality Contact Person
Municipality Name
Street Address
City, State Zip Code

Subject: Notice of Future PennDOT Construction Project: Americans with Disabilities Act Compliance and Removal of On Street Parking
County:
Municipality Name
SR , Section
Project Length:
Project Name:
MPMS Number:

Dear Municipality Contact Person:

The Pennsylvania Department of Transportation is planning a roadway alteration project within your [city/township/borough] which will affect the use of the public right-of-way.

The Americans with Disabilities Act (ADA) of 1990 is a civil rights statute that, among other things, defines the requirements for access to public programs and facilities by persons with disabilities. The implementing regulations for Title II of the ADA make clear that designing and constructing pedestrian facilities in the public right-of-way that are not accessible by persons with disabilities may constitute impermissible discrimination. Section 504 of the Rehabilitation Act of 1973 (504) includes similar prohibitions in the conduct of federally-funded programs.

All projects affecting the use of the public right-of-way must therefore incorporate needed pedestrian access measures within the scope of the project. Specifically, all pedestrian facilities within the scope of the project must comply with the current ADA standards and any locations missing a required pedestrian facility are subject to corrective action during construction of the project.

Along SR [____] there is/are (##) "T" intersection(s) with on street parking directly across from the corners. The on street parking at these "T" intersections prevents the installation of a pedestrian crossing of the SR that would be safe for all users. PennDOT recommends that the appropriate number of on street parking spaces be removed at these intersections to allow a safe and accessible crossing to be established. [Municipality Name] should evaluate the necessary steps required to restrict parking in these locations. Please see attached sketches indicating the "T" intersections, affected parking spaces and proposed crossing details.

We desire to meet with you within the next two weeks to discuss ADA accessibility issues, appropriate cost sharing, utility or right-of-way concerns, and future maintenance responsibilities for this project. The individual listed below will contact you to set-up a meeting date.

Please direct all correspondence to the following contact:

PennDOT Engineering District 0-0
Contact Person
Street Address
City, State Zip Code
Telephone: (000) 000-0000
E-mail: xxxxx@pa.gov

Sincerely,

Project Manager's Name
Title

DATE

Municipality Contact Person **VIA CERTIFIED MAIL**
Municipality Name
Street Address
City, State Zip Code

RE: Failure to remove on street parking to provide pedestrian accommodations

Dear Municipality Contact Person:

As indicated in the letter dated [Date] and the follow up meeting held on [Date], the Pennsylvania Department of Transportation plans to improve SR [ ] through roadway alterations that include [describe alteration work and location], which is under the jurisdiction of [Municipality Name]. To meet current accessibility standards required by the Americans with Disabilities Act (ADA), altered pedestrian facilities must meet the latest design standards. It has been determined that [Municipality Name] has not taken action to remove on street parking located at the "T" intersection(s) (see attached summary) along SR [____] necessary for the establishment of a fully accessible crossing.

Due to the sight distance issues caused by [Municipality Name]'s lack of action regarding parking, PennDOT will not be able to install accessible pedestrian facilities at this/these intersection(s). [Municipality Name] must take appropriate action to prohibit pedestrian crossing at the intersection(s) referenced above. Complaints relating to the lack of accessibility under the ADA will be referred to [Municipality Name.]

Thank you for your attention to this matter. If you have any questions, please contact Contact Person at (000) 000-0000.

Sincerely,

Project Manager's Name
Title

CHAPTER 7

DRIVEWAYS

7.0 INTRODUCTION

It is in the public interest to regulate the location, design, construction, maintenance and drainage of access driveways, local roads and other property within State highway right-of-way for the purpose of security, economy of maintenance, preservation of proper roadway drainage, and safe and reasonable access for both vehicles and pedestrians crossing driveways. Driveways allow vehicles to ingress and egress streets at approved locations. In many locations, driveways will be required to cross pedestrian sidewalks within the roadway right-of-way. Driveways serve the same basic purpose for vehicles as curb ramps serve for pedestrians. Driveway crossings must be designed so that both drivers and pedestrians are able to use them effectively.

The requirements and regulations for driveways must meet the requirements of the latest edition of the Pennsylvania Code, Title 67 - Transportation, Chapter 441 entitled "Access to and Occupancy of Highways by Driveways and Local Roads" (67 PA Code § 441). No driveway must be constructed or altered within State highway right-of-way without first obtaining a highway occupancy permit from the Department.

The provisions of 67 PA Code § 441 contain the general conditions that apply to highway occupancy permit application procedures, fees, and permit issuance, general driveway design requirements and the general rules for penalties or revocation of permits based on violations pursuant to 67 PA Code § 441.

The Americans with Disabilities Act (ADA) of 1990 also requires that all pedestrians including persons with disabilities be able to safely use sidewalks that cross driveways.

This Chapter will provide various driveway design criteria presented in 67 PA Code § 441 and general driveway design guidelines presented in ADA accessibility provisions and best practice design guides for driveways presented in Chapter 5 of FHWA publication, *Designing Sidewalks and Trails for Access, Part II: Best Practices Design Guide*, September 2001.

7.1 DEFINITIONS

The following definitions must be used in conjunction with the criteria described in this Chapter.

1. Access. A driveway, street, or other means of vehicle passage between the highway and abutting property, including acceleration and deceleration lanes and such drainage structures as may be necessary for the proper construction and maintenance of the roadway system.

2. Curbline. A line formed by the face of a curb or in its absence the outer edge of the shoulder, along which curbing is or may be located.

3. Driveway. Every entrance or exit used by vehicular traffic to or from properties abutting a highway. The term includes proposed streets, lanes, alleys, courts, and other vehicular travel ways.

4. Driveway Crossing. The area where a driveway crosses a pedestrian walkway such as a sidewalk. This area generally extends in width from the curbline to the back edge of the sidewalk.

5. Driveway Entrance. The beginning of the driveway where vehicles ingress or egress the roadway.

6. Driveway Ramp. The sloped portion of a driveway usually beginning at the curbline.

7. Driveway Width. The narrowest width of a driveway measured perpendicular to the centerline of the driveway.

8. Egress. The exit of traffic from abutting properties to a highway.

9. Frontage Width. The distance along the right-of-way line in front of an abutting property.

10. Highway. A highway or bridge on the system of State highways and bridges, including the entire width between right-of-way lines, over which the Department has assumed or has been legislatively given jurisdiction.

11. Ingress. The entrance of traffic to abutting properties from a highway.

12. Joint-Use Driveway. A driveway shared by and constructed to provide access to two or three properties.

13. Limited Access Highway. A highway to which property owners or occupants of abutting lands or other persons have no legal right of access except at points and in the manner determined by the Department.

14. Local Road. Every public highway other than a State highway. The term includes existing or proposed streets, lanes, alleys, courts, or vehicular travel ways.

15. Pavement Edge. The edge of the main traveled portion of any highway exclusive of shoulder.

16. Permanent Curbing. Plain or reinforced cement concrete curb which meets Publication 72M, *Roadway Construction Standards*.

17. Permit. A highway occupancy permit issued by an Engineering District office pursuant to 67 PA Code § 441.

18. Property Line Clearance. The distance measured along the pavement edge or curb between the property frontage boundary line and the near edge of the driveway.

19. Returned Curb. A portion of a curb line that is formed by a turn or bend in the curb, usually perpendicular to the roadway curb line, and allows for adjusting heights of abutting surfaces from one elevation to another.

20. Right-of-Way. The area which has been acquired by the Department for highway transportation purposes.

21. Roadway. That portion of a highway improved, designed, or ordinarily used for vehicular travel, exclusive of the sidewalk or shoulder.

22. Roadway Construction Standards. Publication 72M, *Roadway Construction Standards*, containing the Department's design standards for roadway construction.

23. Setback. The lateral distance between the right-of-way line and a building, liquid fuel pump island, display stand, or other object, that will result in a space for vehicles to stop or park between the objects and the right-of-way line.

24. Shoulder. A section of a roadway system adjacent to the traveled way that may be shared by motorized vehicles, horse drawn vehicles, bicycles, and pedestrians. The shoulder facilitates drainage, supports the roadway and provides a buffer between vehicles and pedestrians.

25. Shoulder Line. The intersection of the shoulder slope with the side slope, drainage swale, or ditch slope.

26. Side-Flare. A paved, sloped portion of a driveway or curb ramp edge leading from one elevation to another and provides a surface that can generally be crossed by a vehicle or pedestrian.

27. Sidewalk. A portion of a roadway between curb lines or the lateral line of a roadway and the adjacent property line or easement of private property that is paved or improved and intended for use by pedestrians.

28. Travel Way. The portion of the roadway for the movement of vehicles exclusive of shoulders and auxiliary lanes.

29. Traffic Control Device. Any sign, signal, pavement marking, or device used to regulate, warn, or guide vehicular traffic and pedestrians that is placed on, over, or adjacent to a street, highway, pedestrian facility, or shared-use path by authority of a public agency having jurisdiction.

30. Turning Radius. The radius of an arc which approximates the turning path of the exterior corner of a vehicle.

7.2 GENERAL DRIVEWAY REQUIREMENTS

A. Design Features. Design features of driveways include the following items:

- Driveway width
- Turning radii and other points of curvature
- Driveway gradient, cross slope, and driveway profile
- Angle of driveway intersection with the roadway
- Driveway surface material and traffic island materials
- Depressed access curb type, side-flares, and return curb
- Sidewalk width, location, cross slope, and proposed surface material
- Appropriate property and highway right-of-way lines
- Location of all required traffic control devices
- Roadway curbs, gutters, shoulders, drainage features, and roadway surface material
- Appropriate adjacent building locations
- Adjacent above ground and subsurface utilities and other site features such as service lines, poles, hydrants, sign posts, street parking, grass or tree lawns, street trees, etc.

B. General Driveway Design Criteria.

1. Driveways must be located and designed in such a manner as not to interfere or be inconsistent with the design, function, drainage, or maintenance of the adjoining roadway. Driveway work must be done at such a time and in such manner to be consistent with the safety of the public and must conform to all requirements and standards of the Department. See 67 PA Code § 441 for driveway classifications based on traffic volumes and land use examples.

2. The ability of a driveway to safely and efficiently function as an integral component of a highway system requires that its design and construction be based on the amount and type of traffic that it is expected to serve and the type and character of roadway that it accesses. The driveway must be designed using values appropriate for the posted speed of the roadway being accessed. See 67 PA Code § 441.

3. Access driveways must be permitted at locations in which:

a. Sight distance is adequate to safely allow each permitted movement to be made into or out of the access driveway.

b. The free movement of normal highway traffic is not impaired.

c. The driveway will not create a hazard.

d. The driveway will not create an area of undue traffic congestion on the highway.

4. Specific driveway location restrictions must include the following:

a. Access driveways may not be located at interchanges, ramps, or locations that would interfere with the placement and proper functioning of highway signs, signals, detectors, lighting, or other traffic control devices.

b. The location of a driveway near a signalized intersection may include a requirement that the permittee provide, in cooperation with the local government, new or relocated detectors, signal heads, controller, etc. for the control of traffic movements from the driveway.

c. Access to a property which abuts two or more intersecting streets or highways may be restricted to only one driveway entrance that can more safely accommodate its traffic.

d. The Department may require the permittee to locate an access driveway directly across from a highway, local road, or access driveway on the opposite side of the roadway if it is judged that offset driveways will not permit left turns to be made safely or that access across the roadway from one access to the other will create a safety hazard.

e. An access intended to serve more than three properties or to act as a connecting link between two or more roadways must be, for the purpose of this Chapter, considered a local road and not a driveway regardless of its ownership. The access design must be in accordance with the Department's current standards governing the design of local roads. All other requirements of this Chapter must be complied with before the local road will be allowed access onto a State highway.

f. The number and location of entrances that may be granted will be based on usage, interior and exterior traffic patterns, and the current design policy of the Department.

(1) Normally, only one driveway will be permitted for a residential property and not more than two driveways will be permitted for a nonresidential property.

(2) If the property frontage exceeds 180 m (600 ft), the permit may authorize an additional driveway.

(3) Regardless of frontage, a development may be restricted to a single entrance / exit driveway, served by an internal collector road separated from the traveled way.

5. Driveway approaches must conform to the following criteria:

a. The location and angle of an access driveway approach in relation to the highway intersection must be such that a vehicle entering or leaving the driveway may do so in an orderly and safe manner and with a minimum of interference to highway traffic.

b. Where the access driveway approach and highway pavement meet, flaring of the approach may be necessary to allow safe and easy turning of any vehicular traffic.

c. Where the highway is curbed, a depressed curb driveway approach must be installed adjacent to the highway, shoulder, or gutter grade to maintain proper drainage along the curb. See Publication 72M, *Roadway Construction Standards*, Drawings RC-64M and RC-67M for cement concrete depressed driveway curbs and driveway apron details.

d. The angle of access driveway approach must include the following:

(1) Access driveway approaches used for two-way operation must be positioned at right angles (90°) to the highway or as near to perpendicular as site conditions allow.

(2) When two access driveways are constructed on the same property frontage and used for one-way operation, each of these driveways may be placed at an angle less than a right angle, but not less than 45° to the highway, except that along divided highways where no openings are allowed in the median, the minimum angle of an exit driveway may be 30°.

6. Driveways Adjacent to Intersections. Driveways serving properties located adjacent to a highway intersection must be subject to the following:

a. There must be a minimum 3 m (10 ft) tangent distance between the intersecting highway radius and the radius of the first permitted driveway.

b. The distance from the edge of pavement of the intersecting highway to the radius of the first permitted driveway must be a minimum of 6 m (20 ft) on curbed highways and 9 m (30 ft) on uncurbed highways.

c. Paragraphs a and b of this subsection may be waived only if the intersecting highway radius extends along the property frontage to the extent that compliance is physically impossible.

7. Property Line Clearance. Except for joint-use driveways, no portion of any access must be located outside of the property frontage boundary line.

8. Multiple Driveways. Multiple driveways serving the same property must be separated by a minimum distance of 4.6 m (15 ft) measured along the right-of-way line and 6 m (20 ft) measured along the shoulder, swale or ditch line, or curb. When the distance between multiple driveways is 15 m (50 ft) or less measured along the shoulder, swale or ditch line, the area between must be clearly defined by permanent curbing. This curb must be placed in line with existing curb or 610 mm (2 ft) back of the shoulder, swale or ditch line on uncurbed highways. It must be extended around the driveway radii to the right-of-way line.

9. Curb. Requirements for curbs must conform with the following:

a. Provide curbing wherever it is required to control access or drainage. All curbing must be permanent curbing.

b. Where property abutting the right-of-way line could be used as parking area, provide curbing, permanent guide rail, or fencing to be along the right-of-way line to prohibit vehicle encroachment upon the sidewalk or shoulder area.

c. When curb exists adjacent to the proposed driveway, the line and grade of the existing curb must be matched.

10. Grade for Access Driveway. The grade for access driveway must be constructed in the following manner:

a. All driveways must be constructed so as not to impair drainage within the right-of-way, alter the stability of the improved area, or change the drainage of adjacent areas.

b. Drainage pipe installed under driveways must be at least 380 mm (15 in) in diameter.

c. The side slopes for driveway embankments within the right-of-way must not be steeper than 1V:10H (10.00%).

d. Driveway grade requirements within the right-of-way must conform to Figure 7.1.

(1) The difference between the cross slope of the roadway and the upward grade of the driveway entrance approach must not exceed 8.00%.

(2) When a grass or tree lawn area exists between the roadway curb and the sidewalk and this area is wide enough to maintain a maximum 8.00% change in grade between the roadway surface and the driveway grade, construct a Type 1 or 2 Driveway Apron as shown in Figures 7.2 and 7.4. The sidewalk portion crossing the driveway must maintain a maximum 1V:50H (2.00%) cross slope.

(3) When a wide sidewalk parallels and abuts the curb, construct a Type 1A or Type 2A Driveway Apron, as shown in Figures 7.3 and 7.5. The sidewalk portion crossing the driveway must maintain a maximum 1V:50H (2.00%) cross slope.

(4) When sidewalk is directly behind and parallels the curb, a Type 3 or Type 3A Driveway Apron as shown in Figures 7.6 and 7.7 can be used. This driveway and sidewalk configuration depresses the sidewalk crossing. Certain site conditions may require constructing an additional cheek wall curbing to install this type of crossing.

(5) When a narrow sidewalk is directly behind and parallels the curb, a Type 4 Driveway Apron as shown in Figure 7.8 can be used. This driveway and sidewalk configuration positions the sidewalk crossing further away from the curb in order to maintain the desired sidewalk accessibility. The sidewalk portion crossing the driveway must maintain a maximum 1V:50H (2.00%) cross slope.

(6) All depressed curb side-flare height adjustments must be as indicated.

INTENTIONALLY BLANK

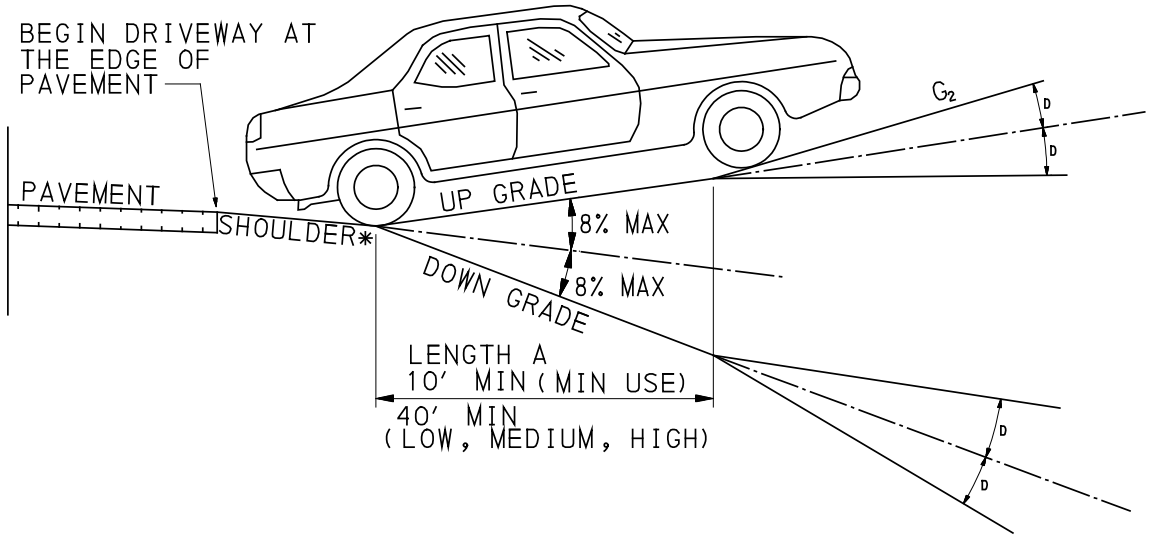

*** THE SHOULDER SLOPE USUALLY VARIES FROM 4% TO 6%. HOWEVER, THE SHOULDER SLOPE SHOULD BE MAINTAINED WHEN CONSTRUCTING THE DRIVEWAY.**

FOR GRADE CHANGES GREATER THAN THOSE INDICATED ABOVE, VERTICAL CURVES AT LEAST 3 m (10 ft) LONG MUST BE CONSTRUCTED AND LENGTH "A" MUST BE INCREASED.

G_2 GRADES MUST BE LIMITED TO 15% FOR MINIMUM USE DRIVEWAYS AND 5% TO 8% FOR LOW, MEDIUM, OR HIGH VOLUME DRIVEWAYS WITHIN THE RIGHT-OF-WAY.

	MAXIMUM GRADE CHANGE (D)	
	DESIRABLE	MAXIMUM
HIGH VOLUME DRIVEWAY	0%	+/-3%
MEDIUM VOLUME DRIVEWAY	+/-3%	+/-6%
LOW VOLUME DRIVEWAY	+/-6%	CONTROLLED BY VEHICLE CLEARANCE

FIGURE 7.1
Driveway Apron Grades

7.3 ADA DRIVEWAY AND PEDESTRIAN GUIDELINES

1. Figures 7.2 through 7.8 illustrate minimum design requirements and acceptable design considerations described for driveway crossings of sidewalks. Although site conditions may not permit strict adherence to the dimensions indicated, every effort must be made to design and construct the safest and most efficient driveways leading onto State highways while ensuring that these facilities remain accessible to the public crossing them.

2. Driveway crossings without a continuous sidewalk cross slope 1V:50H (2.00%) forces pedestrians to travel across the driveway side-flare that can compromise balance and wheelchair stability. Driveways constructed with a return curb at the driveway crossing are also inaccessible to wheelchair users. Existing driveways not meeting these criteria should be replaced to meet new accessibility guidelines. Driveway crossings with steep side-flare connections to adjacent sidewalk (steeper than 10.00%) are not allowed under current design criteria.

3. Driveway crossings should be wide enough to accommodate both the driveway ramp and a level pedestrian sidewalk landing zone. See Figure 7.2 through Figure 7.5 (Types 1, 1A, 2, and 2A Driveway Aprons). These apron types can be constructed on wide parallel sidewalk corridors where either the entire sidewalk zone that abuts the curbline is paved or a non-walk (planting strip) surface is created. As indicated on RC-67M, the minimum sidewalk width is 1525 mm (5 ft). The minimum sidewalk width may be reduced to 1220 mm (4 ft) where 1525 mm × 1525 mm (5 ft × 5 ft) passing areas are provided every 61 m (200 ft).

4. Type 1 and 2 Driveway Aprons (Figures 7.2 and 7.4). Used when a planting strip abutting the curbline separates the sidewalk and curb. If the driveway ramp is not part of the pedestrian sidewalk, a returned curb is better for roadway drainage and has the added affect of slowing traffic due to the tighter turning radius needed to negotiate the driveway entrance approach.

5. Type 1A and 2A Driveway Aprons (Figures 7.3 and 7.5). Used for driveway crossings where a wide sidewalk parallels and abuts the street curb line. These driveway aprons combine sloped side-flares or a curbed return, with a sidewalk landing.

6. Type 3 and 3A Driveway Aprons (Figures 7.6 and 7.7). Sidewalk corridors abutting the street curb line can also be depressed at the driveway entrance apron in many situations to provide a crossing with a maximum landing slope of 2.00% to help prevent poor drainage and ponding along the curb. The driveway ramp begins at the rear edge of the sidewalk landing. The sidewalk is sloped (maximum slope of 1V:12H (8.33%) along each side of the driveway to meet the higher adjacent sidewalk elevations. This type of driveway apron is <u>not</u> as desirable as a level jogged crossing since pedestrians are forced to travel down one ramp and then up another ramp. These crossings can also confuse visually impaired pedestrians since they may believe that they are about to cross a street intersection at a curb ramp. A narrow driveway apron is also desirable to slow down traffic using this type of driveway entrance.

7. Type 4 Driveway Apron (Figure 7.8). Securing additional easement or right-of-way from the adjacent property is recommended for creating a level jogged pedestrian sidewalk crossing for narrow sidewalks.

8. Gradually sloped driveway crossings constructed with flat side-flares under 1V:20H (5.00%) are beneficial for people with mobility impairments but can also become a problem for visually impaired pedestrians unless there is a detectable difference in the slope at the edge of the street. Without a steeper slope to trigger the awareness of a ramp condition, a visually impaired person could inadvertently veer into the street.

9. Built-up driveway entrances that project across the curb and into the street can hinder or obstruct roadway drainage at the curb and are not recommended.

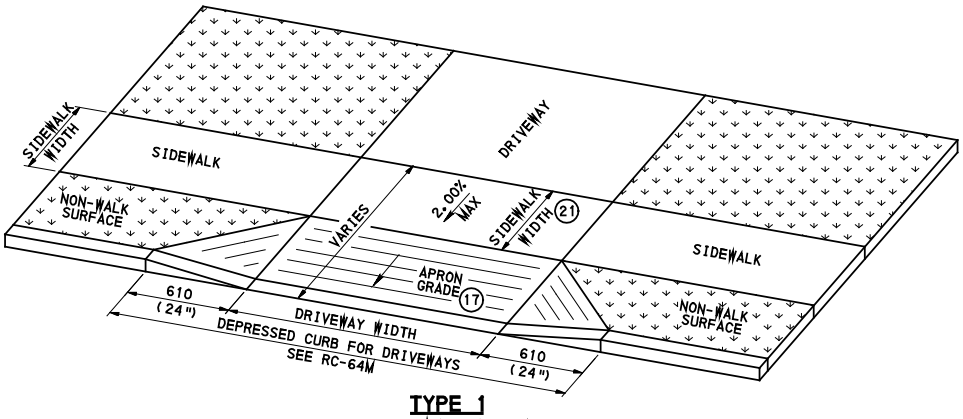

(17) 8% MAX CHANGE IN GRADE BETWEEN ROAD SURFACE AND DRIVEWAY
(21) MINIMUM SIDEWALK WIDTH 1525 (5'-0")

DRIVEWAY CROSSINGS FOR SIDEWALKS ABUTTING PLANTING STRIPS CAN BE DESIGNED WITH A LEVEL LANDING USING SLOPED SIDE-FLARES THAT EASE VEHICLE TURNS.

FIGURE 7.2
Type 1 Driveway Apron

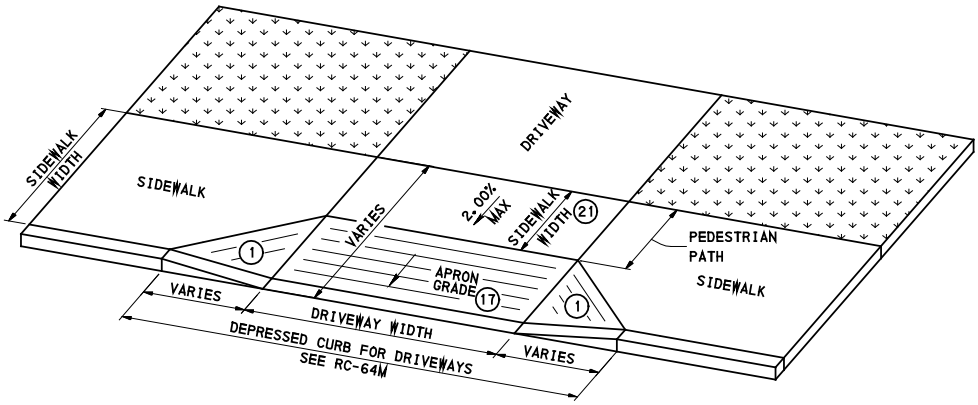

DRIVEWAY CROSSINGS ON A WIDE SIDEWALK CORRIDOR SHOULD BE DESIGNED TO INCLUDE A CONTINUOUS SIDEWALK WIDTH WITH A 2.00% CROSS SLOPE

(1) SIDE FLARES 10.00% MAX SLOPE
(17) 8% MAX CHANGE IN GRADE BETWEEN ROAD SURFACE AND DRIVEWAY
(21) MINIMUM SIDEWALK WIDTH 1525 (5'-0")

WIDE SIDEWALK ZONES ALLOW MORE DESIGN CONFIGURATIONS. THIS CONFIGURATION IS MORE PEDESTRIAN FRIENDLY WITH A CONTINUOUS SIDEWALK AND A SIDE-FLARE WITH A MAXIMUM SLOPE OF 1V:10H (10.00%).

FIGURE 7.3
Type 1A Driveway Apron

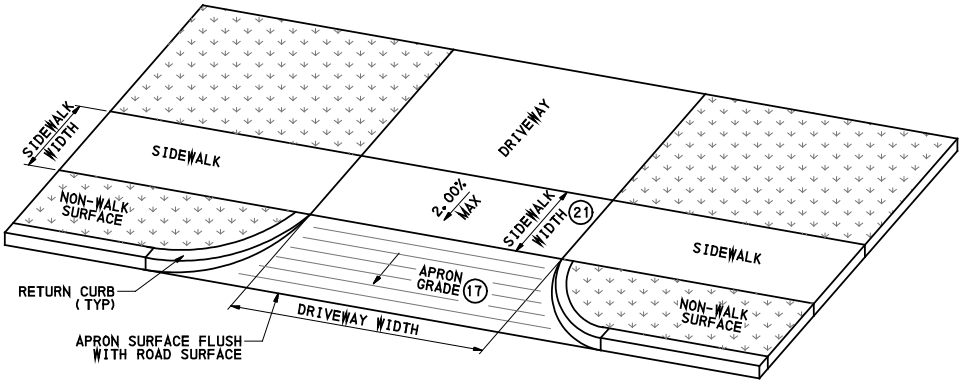

TYPE 2
DRIVEWAY APRON

DRIVEWAY CROSSINGS ON SIDEWALKS WITH PLANTING SHOULD BE DESIGNED TO INCLUDE A CONTINUOUS SIDEWALK WIDTH WITH A 2.00% CROSS SLOPE AND RETURNED CURBS INSTEAD OF FLARES.

(17) 8% MAX CHANGE IN GRADE BETWEEN ROAD SURFACE AND DRIVEWAY
(21) MINIMUM SIDEWALK WIDTH 1525 (5'-0")

DRIVEWAY CROSSINGS FOR SIDEWALKS ABUTTING PLANTING STRIPS CAN ALSO BE DESIGNED WITH RETURNED CURBS. THIS CONFIGURATION FORCES MOTORISTS TO ENTER THE DRIVEWAY CROSSING AT MORE OF A RIGHT ANGLE AND AT A LOWER SPEED.

FIGURE 7.4
Type 2 Driveway Apron

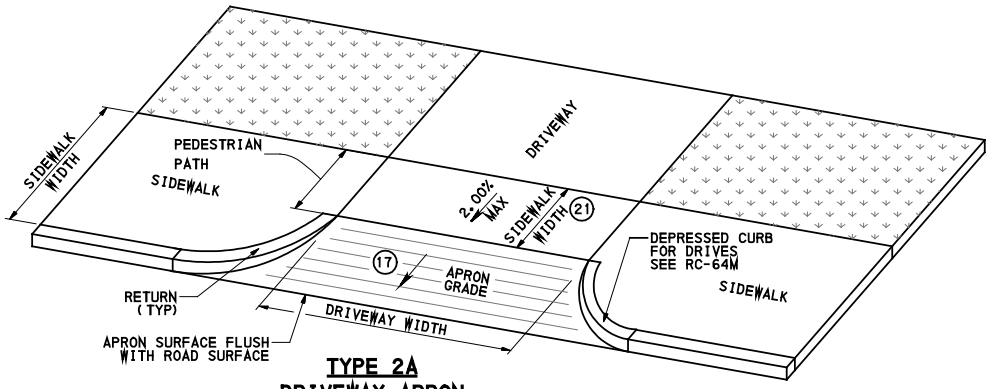

TYPE 2A
DRIVEWAY APRON

DRIVEWAY CROSSINGS ON SIDEWALKS WITH PLANTING SHOULD BE DESIGNED TO INCLUDE A CONTINUOUS SIDEWALK WIDTH WITH A 2.00% CROSS SLOPE AND RETURNED CURBS INSTEAD OF FLARES.

(17) 8% MAX CHANGE IN GRADE BETWEEN ROAD SURFACE AND DRIVEWAY
(21) MINIMUM SIDEWALK WIDTH 1525 (5'-0")

DRIVEWAY CROSSINGS FOR WIDE SIDEWALK ZONES CAN BE DESIGNED WITH RETURNED CURBS. THIS CONFIGURATION FORCES MOTORISTS TO ENTER THE DRIVEWAY CROSSING AT MORE OF A RIGHT ANGLE AND AT A LOWER SPEED BUT IS LESS PEDESTRIAN FRIENDLY SINCE A CURB IS INTRODUCED INTO THE WIDE PEDESTRIAN PATHWAY.

FIGURE 7.5
Type 2A Driveway Apron

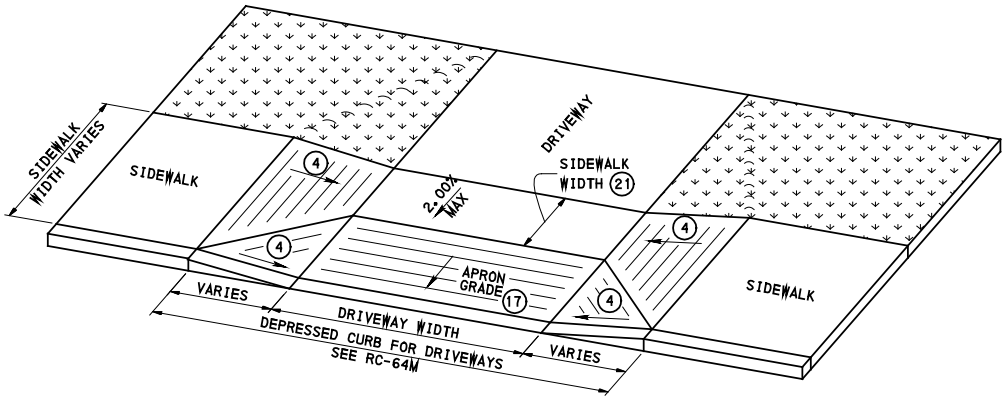

TYPE 3
DRIVEWAY APRON

4 8.33% MAX SLOPE
17 8% MAX CHANGE IN GRADE BETWEEN ROAD SURFACE AND DRIVEWAY
21 MINIMUM SIDEWALK WIDTH 1525 (5'-0")

DEPRESSED, LEVEL SIDEWALK CROSSINGS ENHANCE PEDESTRIAN ACCESS AT DRIVEWAY CROSSINGS WHERE SPACE IS LIMITED. THIS IS LESS PREFERRED DUE TO THE CHANGE IN SLOPE FOR THE PEDESTRIAN.

FIGURE 7.6
Type 3 Driveway Apron

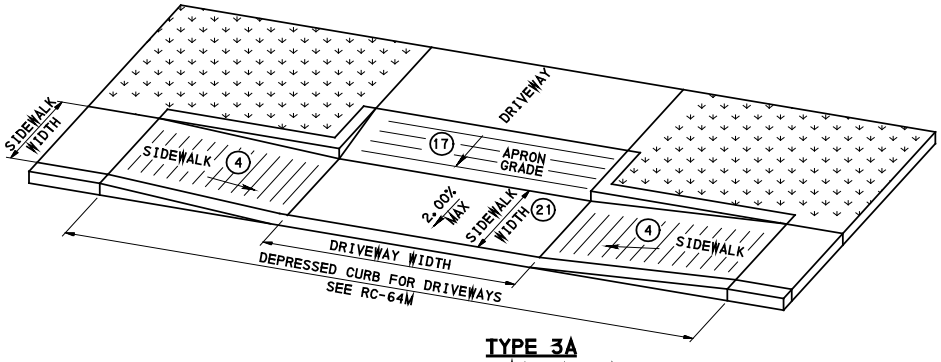

TYPE 3A
DRIVEWAY APRON

PARALLEL DRIVEWAY CROSSINGS ENHANCE PEDESTRIAN ACCESS AT A DRIVEWAY CROSSING WHEN THERE IS NO ROOM TO TRANSITION THE GRADES AND PROVIDE A CONTINUOUS SIDEWALK WIDTH WITH A 2.00% CROSS SLOPE. PARALLEL DRIVEWAY CROSSINGS ARE NOT AS DESIRABLE AS OTHER ACCESSIBLE DRIVEWAY CROSSINGS BECAUSE USERS ARE FORCED TO NEGOTIATE TWO RAMPS INSTEAD OF A LEVEL SURFACE.

4 8.33% MAX SLOPE
17 8% MAX CHANGE IN GRADE BETWEEN ROAD SURFACE AND DRIVEWAY
21 MINIMUM SIDEWALK WIDTH 1525 (5'-0")

NOTE: CERTAIN SITE CONDITIONS MAY REQUIRE CONSTRUCTING ADDITONAL CHEEK WALL CURBING TO INSTALL THIS TYPE OF CROSSING. THIS IS LESS PREFERRED DUE TO THE CHANGE IN SLOPE FOR THE PEDESTRIAN.

FIGURE 7.7
Type 3A Driveway Apron

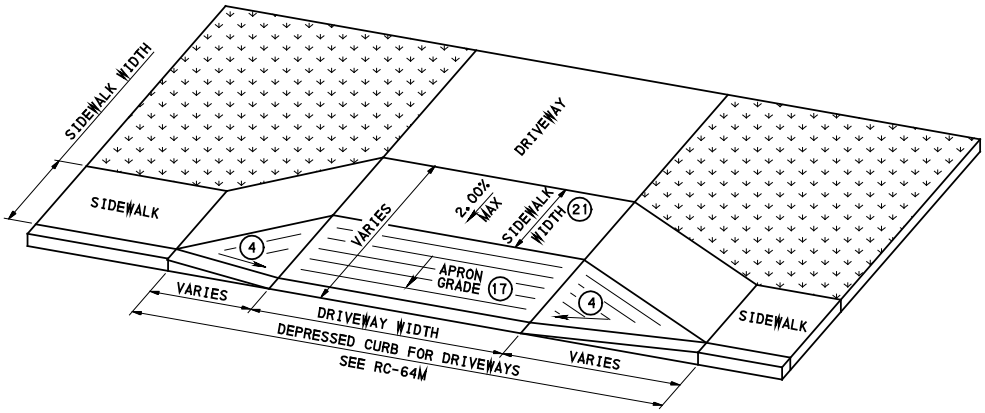

TYPE 4
DRIVEWAY APRON

4 8.33% MAX SLOPE
17 8% MAX CHANGE IN GRADE BETWEEN ROAD SURFACE AND DRIVEWAY
21 MINIMUM SIDEWALK WIDTH 1525 (5'-0")

NOTE: SHIFT SIDEWALK AWAY FROM CURB TO GAIN APPROPRIATE APRON GRADE.

FIGURE 7.8
Type 4 Driveway Apron

CHAPTER 8

LANDSCAPE PLANTING DESIGN (ROADSIDE DEVELOPMENT)

Refer to Publication 13, Design Manual Part 2, *Contextual Roadway Design*, Chapter 22, Landscape Planting.

BLANK PAGE

CHAPTER 9

SAFETY REST AREAS AND WELCOME CENTERS

9.0 INTRODUCTION

The development of Safety Rest Areas and Welcome Centers is a necessary component of highway development. Site development of these areas may also include the provision for a truck weigh-in-motion scale system in order to provide a dual use opportunity at the Safety Rest Area.

Site development must provide visually pleasing, safe and easily accessible facilities which are also fully accessible to persons with disabilities.

9.1 DEFINITIONS

1. Access Aisle. An accessible pedestrian space between parking stalls that provides appropriate clearances to use the space.

2. Accessible Route (AR). A continuous unobstructed path connecting all accessible elements and spaces of a building or facility.
(Americans with Disabilities Act (ADA) Accessibility Guidelines for Buildings and Facilities (ADAAG))
http://www.access-board.gov/adaag/html/adaag.htm

3. Parking Stall. Surface area generally paved and delineated by pavement markings to denote intended vehicle parking space allotments.

4. Pedestrian Access Route (PAR). A continuous and unobstructed walkway within a pedestrian circulation path that provides accessibility. Pedestrian accessible routes may include parking access aisles, curb ramps, crosswalks at vehicular ways, walks, ramps, and lifts.
Draft Public Rights of Way Accessibility Guidelines (PROWAG)
http://www.access-board.gov/prowac/draft.htm

5. Safety Rest Area. A roadside facility safely removed from the roadway with parking, and other facilities deemed necessary for the rest, relaxation, comfort, convenience and information of the motorist. Interstate Safety Rest Areas will also have an all-weather, enclosed building.

6. Sidewalk. A portion of a roadway between curb lines or the lateral line of a roadway and the adjacent property line or easement of private property that is paved or improved and intended for use by pedestrians.

7. Welcome Center. A Safety Rest Area specifically designed to provide information and other services of interest to the traveling public. Welcome Centers are generally located at major highway entry points to the state.

9.2 DESIGN CRITERIA

The design of Safety Rest Areas and Welcome Centers must be in accordance with current Department design standards and the American Association of State Highway and Transportation Officials (AASHTO) to insure adequacy of acceleration and deceleration ramps, turning radii, vehicle parking areas, signing, surface water drainage provisions and highway lighting.

Wastewater disposal systems and drinking water supply systems must be in accordance with all appropriate regulations of the PA Department of Environmental Protection (PA DEP).

Chapter 6, Pedestrian Facilities and the Americans with Disabilities Act must be used for all pedestrian accessibility provisions.

9.3 PARKING CAPACITY DETERMINATION

The capacity of the parking areas needed for each site are determined by calculating traffic volume data for the projected design year with directional distribution and design hour volume constants for peak hour usage as outlined below:

A. Traffic Data - Peak Hour.

ADT = Average Daily Traffic (Normal 20-year projection or other design year as directed)

K = Ratio of Design Hour Volume to ADT (Interstate - Rural 12% or Urban 10%)

D = Directional Distribution (generally about 0.60)

Therefore: Peak Hour Directional Traffic (PHD) = ADT × K × D

B. Parking Requirements.

N = Percentage of vehicles stopping at Safety Rest Areas during peak hours (location factor). The percentage varies from about 5% to about 13% depending upon the location as follows:

1. Near commercial or recreational facilities = 5%.

2. Rural Area = 9%.

3. Isolated area with no nearby commercial or recreational facilities = 13%.

Percentages may be interpolated to reflect locations of nearby existing or proposed facilities.

M = Total parking spaces = PHD × N × length of stay in Safety Rest Area (generally 20 to 30 min or 0.33 to 0.50)

Car Parking Spaces = M × the percentage of cars (generally about 0.80; a lower factor may be used if anticipated truck traffic is high)

Truck Parking Spaces = M - Car Parking Spaces

It is desirable to use the maximum number of calculated parking spaces if the topography of the site and the available property size are compatible for full sized development.

Example: Determine Range of Parking Needed

Assume: ADT = 31 714 (20-year design projection)

N = Rural Area of 9%
Length of stay of 20 min = 0.33
Length of stay of 30 min = 0.50

Therefore: PHD = 31 714 × 0.12 × 0.60 = 2283
M = 2283 × 0.09 × 0.33 = 67.8 CALL 68
2283 × 0.09 × 0.50 = 102.7 CALL 103

Car Parking Spaces = 68 × 0.80 = 54.4 CALL 54
Truck Parking Spaces = 68 - 54 = 14

or

Car Parking Spaces = 103 × 0.80 = 82.4 CALL 82
Truck Parking Spaces = 103 - 82 = 21

Therefore: Desirable range of parking requirements = Car Parking - 54 to 82
Truck Parking - 14 to 21
Total Parking - 68 to 103

9.4 PARKING CRITERIA

A. General.

1. Vehicular traffic flows should be in a continuous, one-way direction. Avoid two-way traffic and the use of dead-end parking lot arrangements.

2. Whenever possible, the car parking area should be designed as a separate area from the parking area used for trucks, buses, car-trailers and recreational vehicles.

3. The geometric design of the parking areas should avoid small acute angle curbed areas and excessive small protrusions or islands into the parking area which can make snow removal operations difficult.

4. The design of the parking areas must be functional, simple, and attractive and provide safe vehicular movements which will not test the driver's ability.

5. The gradient of the parking areas should be relatively level but still sloped or crowned to permit surface drainage flows directed toward inlet structures.

6. Clearing or removal of snow during winter should be carefully analyzed. Increased turning radii for snow removal equipment should be considered. Determining where snow can be piled during the design stage can increase the efficiency of the parking area during the winter season.

7. Parking stalls must be indicated with pavement markings to delineate the designated parking pattern and other pavement markings such as directional arrows, crosswalk indicators, etc. should be considered.

8. If parking stalls are too narrow, the drivers will often ignore stripe demarcation lines and overlap into adjacent stalls. Drivers often do not park precisely in the center of the designated stall and do not always pull-in to the full depth allowance of the stall. Therefore, where space permits, it is always best to avoid minimum stall dimensions.

Maximum allowable grade for the accessible parking stalls is 1V:50H (2.00%). Parking spaces that are not level may deny use to persons with disabilities since vehicle doors are more difficult to operate on slopes where wheelchairs tend to roll away.

B. Parking Configurations.

1. Car Parking.

a. The car parking stalls should be designed for head-in parking either at a 60° or 45° angle to the traffic lane.

b. Stalls at a 60° angle are more commonly used and are generally considered the most satisfactory in relation to pull-in and back-out vehicle movements. Traffic aisle and parking lot widths are reasonable.

c. Stalls at a 45° angle are preferred in some cases since they require a smaller change of direction to enter the stall and allow a reduced lot width. However, fewer cars can be parked in a given space since the stall width dimension per vehicle measured along the curb is greater.

d. Refer to Figure 9.1 for recommended parking dimension information.

e. Provide the appropriate number of accessible car parking stalls as shown in Table 9.1 at a convenient location or locations near the Safety Rest Area/Welcome Center building. Provide an accessible route from the parking area to the building.

f. Two accessible car parking stalls can share a common access aisle. In general, a person with disabilities should not be forced to travel behind parked vehicles along their circulation path.

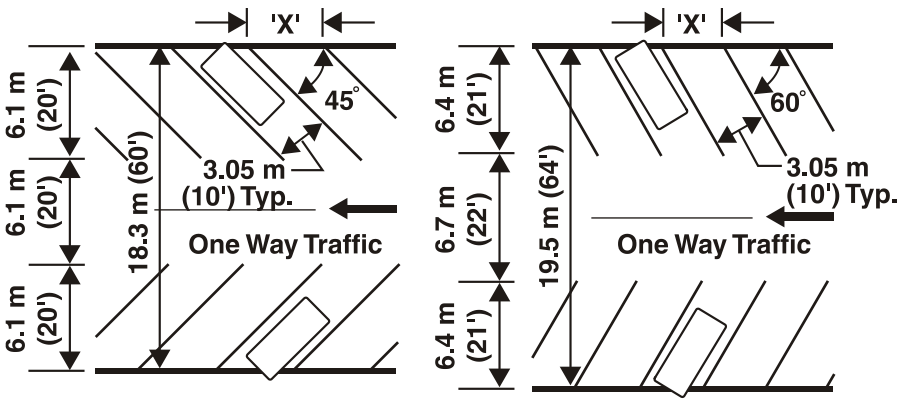

METRIC					
PARKING ANGLE (DEGREES)	AISLE WIDTH (m)	STALL DEPTH (m)	STALL WIDTH (m)	TOTAL WIDTH (m)	CURB LENGTH 'x' (m)
45	6.1	6.1	3.05	18.3	4.31
60	6.7	6.4	3.05	19.5	3.52

ENGLISH					
PARKING ANGLE (DEGREES)	AISLE WIDTH (ft)	STALL DEPTH (ft)	STALL WIDTH (ft)	TOTAL WIDTH (ft)	CURB LENGTH 'x' (ft)
45	20	20	10	60	14.14
60	22	21	10	64	11.55

FIGURE 9.1
DIMENSIONS FOR CAR PARKING SPACES

TABLE 9.1
REQUIRED MINIMUM NUMBER OF ACCESSIBLE CAR SPACES AT SAFETY REST AREAS

NUMBER OF SPACES IN SAFETY REST AREA PARKING LOTS	REQUIRED MINIMUM NUMBER OF ACCESSIBLE SPACES
1 TO 25	1
26 TO 50	2
51 TO 75	3
76 TO 100	4
101 TO 150	5
151 TO 200	6

g. At least one accessible parking space must be served by an access aisle at least 2440 mm (96 in) wide and be signed by an appropriate "VAN ACCESSIBLE" sign. Utilization of the universal parking space design criteria can eliminate the requirement for the "VAN ACCESSIBLE" sign. See Section 9.4.B.2.

h. Access aisles should be delineated with white cross-hatch pavement markings to further indicate that these areas should not be obstructed by parked vehicles.

Use 100 mm (4 in) wide stripes spaced 1220 mm (48 in) center to center to delineate the access aisle. Border the entire area with a 100 mm (4 in) wide stripe. Generally position the stripe at a 45° angle to the vehicle stall curb line. Extend stripes the full length and width of the aisle. See Figures 9.2 and 9.3 for details of the accessible parking stall layout.

2. Universal Parking Design Criteria. All accessible car spaces are 3350 mm (132 in) wide with a 1525 mm (60 in) access aisle so that the stall measures 4875 mm (192 in) wide. See Figure 9.4.

The 4875 mm (192 in) stall permits vehicles to park to one side or the other within the 3350 mm (132 in) dimension to allow persons to exit and enter the vehicle on either the driver or passenger side although the marked access aisle may not be usable.

No additional signage for vans is needed since all spaces can accommodate a van with a side-mounted lift or ramp. The 4875 mm (192 in) stall eliminates competition between cars and vans for space since all stalls can accommodate either vehicle.

3. Truck Parking (Buses, RV's, Car-Trailers).

a. Truck parking stalls should be designed for pull-through operation at either a 30°, 45° or 60° angle to the traffic lane.

b. Stalls at a 30° angle are generally more satisfactory in relation to pull-through vehicle movements. However, they also require a longer overall length of parking area.

c. In certain situations, parallel park stalls designed for RV or car-trailer type vehicles which would allow a right-side curb discharge for occupants of the vehicle should be considered in order to increase the capacity of the parking area and safety of the vehicle occupants.

d. Parking stall dimensions should be designed to accommodate the WB-20 (WB-67) truck Interstate semi-trailer units.

e. An accessible route must be provided from the truck parking lot to the building.

f. Refer to Figure 9.5 for recommended parking dimension information.

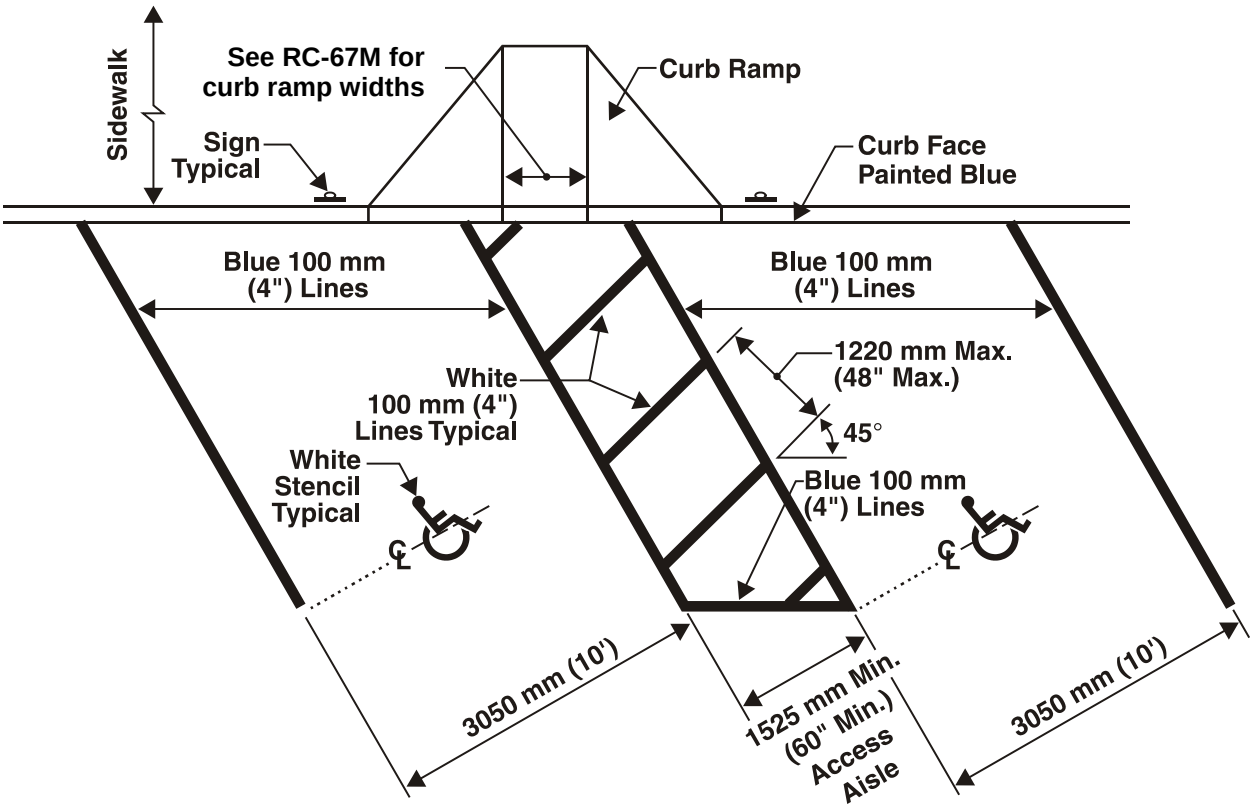

Note: Accessible parking signs shall be mounted 2.4 m (8 ft) above grade and setback sufficient to avoid car bumper overhang and pedestrian traffic.

FIGURE 9.2
Standard Accessible Parking Stalls

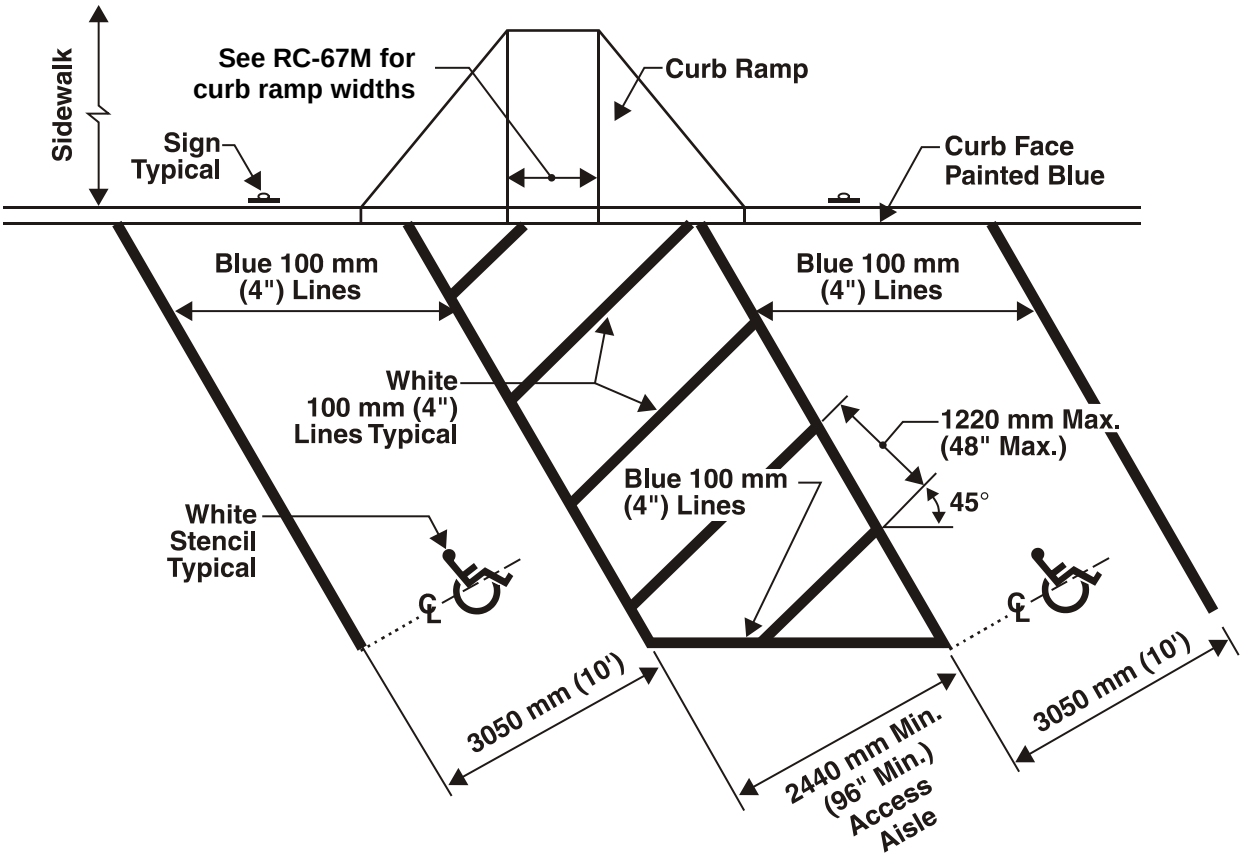

Note: Accessible parking signs shall be mounted 2.4 m (8 ft) above grade and setback sufficient to avoid car bumper overhang and pedestrian traffic.

FIGURE 9.3
Van Accessible Parking Stalls

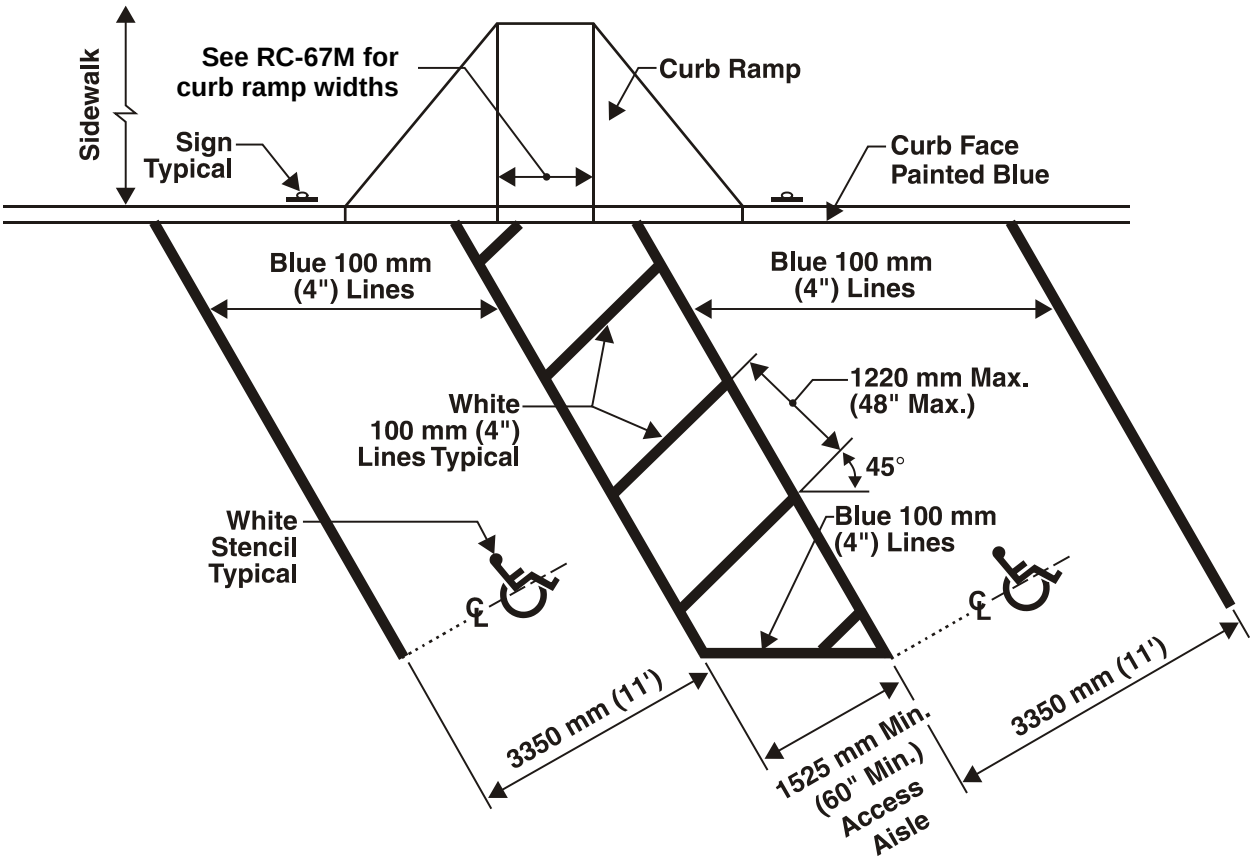

Note: Accessible parking signs shall be mounted 2.4 m (8 ft) above grade and setback sufficient to avoid car bumper overhang and pedestrian traffic.

FIGURE 9.4
Universal Accessible Parking Stalls

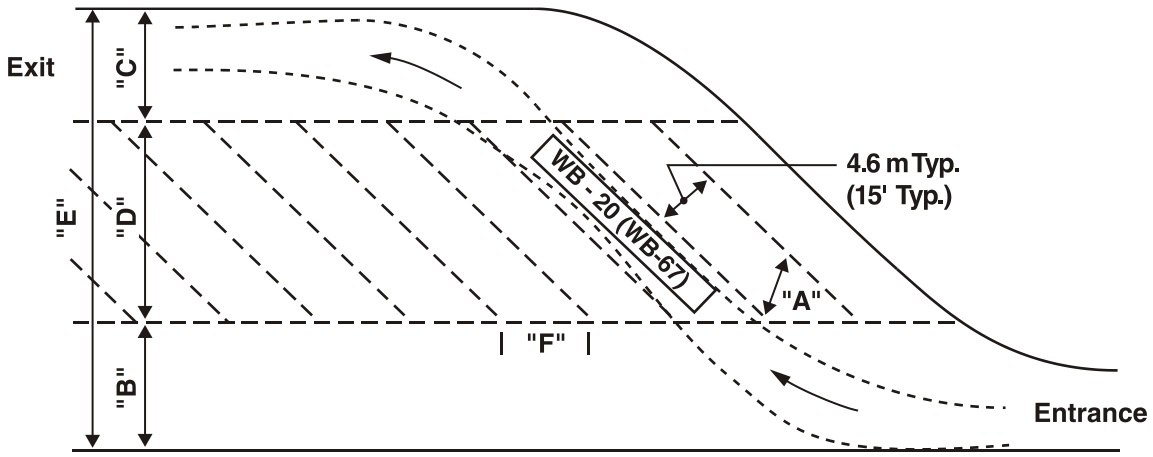

LEGEND

"A"	Angle of Parking	"D"	Parking Width
"B"	Entrance Roadway Width	"E"	Total Width
"C"	Exit Roadway Width	"F"	Stall Entrance Width

METRIC (WB-20)					
ANGLE OF PARKING (DEGREES) "A"	ENTRANCE ROADWAY WIDTH (m) "B"	EXIT ROADWAY WIDTH (m) "C"	PARKING WIDTH (m) "D"	TOTAL WIDTH PARKING AREA (m) "E"	STALL ENTRANCE WIDTH (m) "F"
30*	6.7	6.7	14.0	27.4	9.20
45	9.1	9.1	18.3	36.5	6.51
60	12.2	10.7	21.3	44.2	5.31

ENGLISH (WB-67)					
ANGLE OF PARKING (DEGREES) "A"	ENTRANCE ROADWAY WIDTH (ft) "B"	EXIT ROADWAY WIDTH (ft) "C"	PARKING WIDTH (ft) "D"	TOTAL WIDTH PARKING AREA (ft) "E"	STALL ENTRANCE WIDTH (ft) "F"
30*	22	22	46	90	30
45	30	30	60	120	21.2
60	40	35	70	145	17.3

*Note: The "D" parking width dimension will allow a truck vehicle length of 23.7 m (78 ft) if parked in center of stall.

FIGURE 9.5
DIMENSIONS FOR TRUCK PARKING SPACES
(DESIGN VEHICLE WB-20 (WB-67))

9.5 WASTEWATER FLOW CALCULATION

Determine the average daily flow of wastewater from the Safety Rest Area facility by using the following calculations and procedures:

Assume: ADT = Average Daily Traffic (20-year projection or other design year as directed).

D = Directional Distribution (assume 0.60).

N = Percentage of vehicles stopping at Safety Rest Area (assume 9% or 0.09).

V = The number of vehicles stopping per day at the Safety Rest Area.

= ADT × D × N.

U = Vehicle Occupancy (3.0 to 3.5 persons per vehicle, assume average of 3.25).

S = Percentage of persons stopping at Safety Rest Area using the toilet facilities (assume 75% or 0.75).

P = The number of restroom facility users per day.

= V × U × S.

Design Parameters:

1. 60% male users.

2. 40% female users.

3. 67% of males use the urinals (40% of total usage).

4. 60% watercloset (toilet) usage.

5. Assume 2.3 L (0.6 gal) of grey water per user. (This figure includes all other water usage in the building excluding toilet and urinal usage).

6. Low-flow water saving fixture usage.
Urinal - 3.8 L (1.0 gal) per flush.
Toilet - 6.0 L (1.6 gal) per flush.

7. Diurnal Flow Distributions:
8:00 AM - 12:00 Noon = 30% of total daily flow
12:00 Noon - 4:00 PM = 30% of total daily flow
4:00 PM - 8:00 AM = 40% of total daily flow

8. Peak Hourly Flow (PHQ) Percentage of the average daily flow (Q) ranges between 13.5% and 16%. (Assume average of 15% or 0.15)
Q (Average Daily Wastewater Flow) = P × CF (Composite Flow Per User)

Determine the composite wastewater flow (liters (gallons)) per user (CF) based on the proposed fixture water usage as indicated in the following example:

METRIC	**ENGLISH**
0.6 toilet usage × 6.0 L/flush = 3.6 L	0.6 toilet usage × 1.6 gal/flush = 1.0 gal
0.4 urinal usage × 3.8 L/flush = 1.5 L	0.4 urinal usage × 1.0 gal/flush = 0.4 gal
Grey water usage = 2.3 L	Grey water usage = 0.6 gal
CF = 7.4 L/user	CF = 2.0 gal/user

Calculation Example: Design Year ADT = 21 688	
METRIC	**ENGLISH**
V = ADT × D × N V = 21 688 × 0.6 × 0.09 V = 1171 (vehicles per day stopping at Safety Rest Area) P = V × U × S P = 1171 × 3.25 × 0.75 P = 2854 (users per day) Q = P × CF Q = 2854 users/day × 7.4 L/user Q = 21 119.6 L/day CALL 21 000 L/day (Average Daily Flow) PHQ = Q × 0.15 PHQ = 21 000 × 0.15 PHQ = 3150 L	V = ADT × D × N V = 21,688 × 0.6 × 0.09 V = 1171 (vehicles per day stopping at Safety Rest Area) P = V × U × S P = 1171 × 3.25 × 0.75 P = 2854 (users per day) Q = P × CF Q = 2854 users/day × 2.0 gal/user Q = 5708 gal/day CALL 5700 gal/day (Average Daily Flow) PHQ = Q × 0.15 PHQ = 5700 × 0.15 PHQ = 855 gal

Diurnal Flow Distribution:

	METRIC	**ENGLISH**
8:00 AM - 12:00 Noon	0.3 × 21 000 = 6300 L	0.3 × 5700 = 1710 gal
12:00 Noon - 4:00 PM	0.3 × 21 000 = 6300 L	0.3 × 5700 = 1710 gal
4:00 PM - 8:00 AM	0.4 × 21 000 = 8400 L	0.4 × 5700 = 2280 gal

9.6 WATER SUPPLY DEMAND CALCULATION

The method for determining the peak instantaneous demand must be based on weighting fixtures in accordance with their water supply load producing effects on the water distribution system as follows:

1. Determine the total number of toilets, urinals and sinks in the Safety Rest Area building.

2. Assign a demand weight to each fixture in terms of Fixture Units (FU) (Refer to Table 9.2) and compute the cumulative Fixture Unit value.

3. Convert the total Fixture Unit value to equivalent liters per second (gallons per minute) peak instantaneous demand. (Refer to Table 9.3)

Calculation Example:

Refer to Section 9.7.A, Safety Rest Area Building Criteria and Tables 9.2 and 9.3.

Determination of Fixture Units:

17 water closets (toilets) × 10 FU	= 170
6 urinals × 5 FU	= 30
17 lavatories (sinks) × 2 FU	= 34
Total Fixture Units	= 234

234 Fixture Units equates to 6.2 L/s (98 gal/min) peak instantaneous demand. (Table 9.3)

TABLE 9.2
DEMAND WEIGHT OF FIXTURES IN FIXTURE UNITS

FIXTURE	OCCUPANCY	TYPE OF SUPPLY CONTROL	LOAD (FIXTURE UNITS)
Water Closet	Public	Flush Valve	10
Water Closet	Private	Flush Valve	6
Urinal	Public	Flush Valve	5
Lavatory	Public	Faucet	2
Lavatory	Private	Faucet	1
Kitchen Sink	Private	Faucet	2
Service or Mop Basin Sink	Office, etc.	Faucet	4

TABLE 9.3
CONVERSION OF FIXTURE UNITS TO EQUIVALENT L/s (gal/min)

DEMAND (LOAD) FIXTURE UNITS	DEMAND (LOAD), L/s SYSTEM WITH FLUSH VALVES (METRIC)	DEMAND (LOAD), gal/min, SYSTEM WITH FLUSH VALVES (ENGLISH)
6	–	–
8	–	–
10	1.7	27
12	1.8	29
14	1.9	30
16	2.0	32
18	2.1	33
20	2.2	35
25	2.4	38
30	2.6	41
35	2.8	44
40	3.0	47
45	3.1	49
50	3.3	52
60	3.5	55
70	3.7	59
80	3.9	62
90	4.1	65
100	4.3	68
120	4.6	73
140	4.9	78
160	5.2	83
180	5.5	87
200	5.8	92
225	6.1	97
250	6.4	101
275	6.7	106
300	6.9	110
400	7.9	126
500	9.0	142

9.7 SAFETY REST AREA AND WELCOME CENTER BUILDINGS

A. Safety Rest Area Building. The current standard Safety Rest Area building design includes 23 rest room fixtures comprised as follows:

Men's Rest Room - 6 water closets (toilets)
6 urinals
8 lavatories (sinks)

Women's Rest Room- 10 water closets
8 lavatories

Family Assisted Rest Room - 1 water closet
1 lavatory

B. Welcome Center Building. A standard Welcome Center building design does not exist. Each building design and its component number of rest room fixtures will be determined for each site location.

9.8 WEIGH-IN-MOTION SCALE SYSTEM

The truck weigh-in-motion (WIM) scale system comprised of stationary weighpads installed in the roadway must be designed to operate in conjunction with the design layout of the truck parking access roadway and parking area when directed.

The access roadway is an essential part of the WIM system and therefore should be as flat and uniform as possible for approximately 60 m (200 ft) ahead of and 15 m (50 ft) beyond the weighpad location. The roadway gradient should not exceed 3% and the transverse slope of the pavement should not exceed 1%.

The WIM scales should be located within a tangent section of the access roadway and outside of the superelevation of the roadway, if possible.

The design layout relationship of the truck parking area to the access roadway should promote a reasonable view of the side of each truck as it passes over the sorting scale from the first truck parking space where the mobile weigh command center van will park.

The WIM scale location must be set no closer than 90 m (300 ft) from the location of the system control enclosure. The control enclosure pedestal support must be located from 1.5 m to 4.5 m (5 ft to 15 ft) behind the curb line of the first truck parking stall.

9.9 PLANTING DESIGN GUIDELINES FOR WELCOME CENTERS AND SAFETY REST AREAS

The following guidelines should be used when considering landscape planting design for Welcome Centers and Safety Rest Areas.

- Consider trees that will provide good shading opportunities at table pad areas. Place trees on the appropriate side of the pad to give shade throughout the afternoon if possible.

- Avoid 'dirty' trees that have the potential to drop excessive branches, fruit, and large leaves in use and pavement areas such as: Sugar and Norway Maple, American Redbud, White and Green Ash, some crabapples, etc.

- Use colorful spring flowered and fall foliage species.

- Avoid disease prone varieties of Crabapple and other flowering trees. Avoid pest problem trees such as Littleleaf Linden (Japanese Beetle). Avoid thorny type trees and shrubs.

- Use native species to the best extent possible but do not be strictly limited to native species. Use the best plant necessary for the planting situation.

- Avoid planting too close to buildings and other structures such as light poles and signs. Allow for normal plant growth development and light to reach all sides of the plant. Remember, plants are constantly changing in size as they mature and can quickly overgrow a particular planting site. Trees planted too close together will grow into or over any nearby plants.

- Avoid planting vegetation over underground utility service runs and drainage pipes. Avoid planting in the center of drainage swales.

- Avoid planting shrubs too close to the edge of sidewalks where the shrub's potential spread will grow out over the sidewalk and require pruning to keep it from interfering with pedestrian movement.

- Trees located along sidewalks should not be placed where their lower limbs will interfere with pedestrian movement. Larger growing trees such as Sycamore and Maple with large growing surface roots should not be placed where the roots can damage sidewalks.

- Avoid placing plants that can be damaged by salt in areas where winter maintenance activities will harm the plants either by spray or by plowed snow. Snow pushed or dumped on top of the plants will physically damage them.

- Avoid using planting arrangements that could promote unsafe conditions by creating areas where people can easily hide.

- Avoid excessive use of ground cover type plants such as ivy, myrtle, pachysandra, etc. since they are hard to maintain (weed) and require large numbers of plants to "fill" in an area. Ivy will eventually climb over other landscape features.

- Use varying planting sizes of trees and shrubs. Use deciduous trees up to 90 mm (3.5 in) caliper. However, cost considerations may limit the size to smaller caliper trees. More trees can be provided at 50 mm (2 in) cal. than for 90 mm (3.5 in) caliper. Limit planting size of evergreen trees to 1.8 m (6 ft) or less in height. Limit planting size of shrubs to 1.2 m (4 ft) or less in height. Larger plants do not survive transplant shock, as well as smaller plants, since a large amount of the feeder roots are lost in digging the plant.

- Small earth mounds can be used to help limit views to certain areas and to provide special planting sites. Limit the steepness of the mound slope to a 1V:4H ratio. Large rocks and boulders can also be placed among shrub plantings to create visual diversity. Landscape timbers or interlocking blocks can be useful to create shrub bed edges or planting walls.

- Planting for naturalized areas with daylilies and spring bulbs can be effective in creating colorful planting sites that do not have to be mowed.

- If trees are to be braced, use a 1 or 2 stake method (see Publication 72M, *Roadway Construction Standards,* Drawing RC-91M) that will not interfere with mowing operations.

- Layout trees and shrubs in free flowing or "natural" arrangements in order to avoid straight-line plantings.

BLANK PAGE

CHAPTER 10

DRAINAGE DESIGN AND RELATED PROCEDURES

10.0 INTRODUCTION

Drainage design is an essential element of highway design. It encompasses hydrology, hydraulics, permitting, and ultimately, providing facilities to collect and intercept surface runoff, remove or diverting it from the roadway, and channel it to suitable locations where it can be safely discharged downstream of the roadway.

Drainage is a key factor in the development of all types of improvements on all classifications of highways, and in all phases of project development. It must be considered in the development of preliminary location studies for new, low volume, local roads in rural areas, as well as the preparation of final design plans, specifications and estimates for the reconstruction of busy, urban freeways.

Hydrology, hydraulics and soil mechanics are the sciences generally applicable to the design of highway drainage. The application of these sciences to drainage design is relatively new and consequently research work carried on throughout the country has altered and will continue to alter some of the original practices. Therefore, this Chapter may be revised from time to time in order to keep pace with the modern development of hydraulic science. It should be noted that this Chapter only serves as a general guide to design techniques and procedures; there is no intention to replace sound engineering judgment.

Controlled aerial photography should be obtained, prior to construction, on the portion of projects involving significant floodplain encroachment or on those projects where there is a potential for significant additional flooding. This data would be of significant value during design and in evaluating flooding complaints.

The roadway drainage and waterway structures as referred to above include culverts, bridges, channel changes and longitudinal encroachments on waterways or floodplains.

This Chapter provides the engineer with general guidance and direction to the Department's drainage design procedures by addressing a broad range of issues related to drainage design. Careful analysis of existing site conditions, sound engineering judgment, and judicious application of the principles and procedures described or referenced in this Chapter will result in highway drainage designs that are functional and cost effective.

The following is a brief summary of the contents of this Chapter:

Section 10.1 addresses procedures for compliance with waterway and floodplain management requirements or regulations. The procedure described herein allows the Department to obtain waterway approvals from various regulatory agencies while fulfilling the applicable requirements and regulations.

Section 10.2 describes the hydrologic and hydraulic methods required to estimate peak discharges for roadway drainage structures. These include procedures for accumulating preliminary data and estimating peak flow discharges using storm intensity-frequency-duration curves. Also included are discussions of storm durations and times of concentration.

Section 10.3 describes the hydraulic capacities of various types of drainage facilities, including ditches, swales, curbed sections, depressed medians, inlets, pipe culverts, inlets, and junctions, storm sewer systems and pavement base drains. This Section introduces a computation table for preliminary storm sewer design. Also included is a brief discussion of stormwater management facilities and how to obtain hydraulic computation approval, including an example of a Drainage Design Report.

Section 10.4 presents the Department's design criteria for various types of storm drainage pipes. The criteria were used to develop fill height tables presented in the Standard Drawings and in Chapter 10, Appendix B. The tables discussed herein specify maximum and minimum allowable fill heights for reinforced concrete, metal and thermoplastic pipes.

Section 10.5 discusses the Department's recommended procedure for obtaining a waterway approval. It describes the role of the Engineering District in preparing the permit applications and technical submissions required by various regulatory agencies, including the Pennsylvania Department of Environmental Protection (PA DEP), the Pennsylvania Fish and Boat Commission (PFBC), the US Coast Guard, the US Army Corps of Engineers (USACE), and the Federal Highway Administration (FHWA).

Section 10.6 discusses the Department's criteria for selection of the appropriate hydrologic and hydraulic methodologies for a range of drainage design situations. Hydrologic and hydraulic (H&H) requirements are two key issues that must be addressed in the early phases of a project's drainage design. The Department's standard "toolbox" of H&H methodologies includes established analysis techniques that are well-suited to the majority of waterway structures typically encountered in Pennsylvania.

Section 10.7 provides detailed guidance in the preparation of Hydrologic and Hydraulic (H&H) reports, and may be used as a practical checklist of data that should be considered for inclusion in an H&H report. The criteria provided in this Section should be adapted to the nature of the stream and floodplain, the importance of the structure and other pertinent factors.

Section 10.8 describes the Department's procedure for obtaining permits from the US Coast Guard. Included herein is a map indicating the boundaries and mailing addresses of the US Coast Guard Districts with jurisdiction over the navigable waters of the United States in Pennsylvania. This Section also describes the information to be included in a Bridge Permit Application.

Section 10.9 describes the Department's procedure for obtaining permits from the US Army Corps of Engineers (USACE). This Section serves as a general guide to the various USACE regulations, including the Section 404 Permit, the Section 10 Permit, and the Pennsylvania State Programmatic General Permit (PASPGP). Also included herein is a map indicating the boundaries and mailing addresses of the USACE Districts with jurisdiction over the waters of the United States in Pennsylvania.

Section 10.10 provides the Department's recommended procedure for the design of channel construction involving fishable streams. Included in this Section is a discussion of the role of the Pennsylvania Fish and Boat Commission (PFBC), and factors to consider when designing channel relocations and crossings of various types of fishable streams.

Section 10.11 provides general guidance in the design of systems to accommodate fish passage in low flow highway culverts. Included herein is a discussion of the need to provide zones of slow water where fish can rest while traversing culverts, and detailed guidelines for the design of baffle systems and other features to accommodate fish passage.

Section 10.12 describes the Department's procedures for filling, removing, sealing, and/or altering abandoned water supply sources within the right-of-way. These sources typically include drilled wells, driven wells, dug wells, and springs.

Chapter 10, Appendix A presents a FHWA memorandum dated June 25, 1982 and is entitled, *Procedures for Coordinating Highway Encroachments on Floodplains with the Federal Emergency Management Agency (FEMA)*.

Chapter 10, Appendix B contains the Fill-Height Criteria and Tables for Concrete, Metal and Thermoplastic Pipes discussed in Section 10.4.

Chapter 10, Appendix C presents the joint guidance issued by PennDOT and PA DEP regarding Hydraulic Modeling Requirements for PennDOT H&H Reports.

Chapter 10, Appendix D provides checklists that must be used to review Hydrologic and Hydraulic Reports, hydrology, HEC-RAS, HY-8, and scour analysis, where applicable.

Chapter 10, Appendix E provides a list of references cited throughout the Chapter, particularly Section 10.6.

Chapter 10, Appendix F presents a FEMA memorandum dated April 30, 2001 and is entitled, *Policy for Use of HEC-RAS in the NFIP*.

Chapter 10, Appendix G presents joint agency guidance between the Department and PA DEP for permitting requirements for hydraulic modeling of temporary construction activities, particularly for temporary structures needed to facilitate the construction of permanent bridges and culverts.

Chapter 10, Appendix H furnishes permit coordination procedures agreed to by the Department and PA DEP for erosion and sediment pollution control plan approvals and NPDES permits.

Chapter 10, Appendix I provides clarification from PA DEP of consistency letter requirements for stormwater management analysis and floodplain management analysis.

10.1 PROCEDURE FOR COMPLYING WITH WATERWAY AND FLOODPLAIN MANAGEMENT REQUIREMENTS OR REGULATIONS

A. General. This Section describes the Department's procedure for complying with applicable waterway and floodplain management regulations. The discussion below refers several times to Title 23 (Highways) of the Code of Federal Regulations (CFR). This document may be viewed on the website for the Government Printing Office.

1. Department's Proposed Activity or Action. The term "proposed activity or action" applies to any highway (roadway and structure) construction, reconstruction, rehabilitation, repair or improvement undertaken by the Department. This term also applies to all roadway drainage and waterway structures referred to in this Chapter.

2. Potential Encroachment on 100-Year Floodplain. All bridges, culverts and channel changes are assumed to encroach on 100-year floodplains. Encroachments should be avoided wherever possible. For encroachments, the following sources of information can be utilized to determine if the encroachment does exist:

a. Federal Emergency Management Agency (FEMA) flood maps (Floodway Maps, Flood Insurance Rate Maps or Flood Hazard Boundary Maps).

b. US Geological Survey Maps of Flood-Prone Areas.

c. Hydraulic computations.

d. Flood history.

e. Engineering judgment.

The highest order of information available and practical shall be used. FEMA and Geological Survey maps have been made available to the Engineering Districts.

3. Preliminary Risk Assessment. Once it is concluded that the proposed activity encroaches on a 100-year floodplain, a risk assessment may be made to determine if there is a potential for property loss or risk to human life during the service life of the highway. Qualified personnel knowledgeable of drainage principles should perform the preliminary risk assessment. This assessment can be performed in the field, with or without minimal hydraulic computations. Its findings (with or without risk) should be recorded in the Engineering District's project files. For practical purposes, only those activities which are likely to cause noticeable adverse effects on human life, property or environment are to be considered as having a "risk". The risk assessment should also determine if the flooding would impact emergency personnel or facilities. The findings of the risk assessment should also be noted in the environmental documents.

4. Compliance with FEMA Regulatory Floodway Requirement. FEMA floodway maps should be utilized to determine if the proposed activity encroaches on the "Regulatory Floodway". Any encroachment on a regulatory floodway shall be avoided, where practicable. If this encroachment cannot be practicably avoided and results in an increase in the 100-year flood elevation, an appropriate corrective measure (occasional flowage easement, hydraulically equal compensated area or hydraulically equal dispersed floodway) should be provided or a revision of the floodway data and/or maps should be made. On an individual project basis,

approval or concurrence may be required from FEMA, PA DEP, the Pennsylvania Department of Community and Economic Development (PennDCED), and the applicable municipalities for providing the corrective measure and revising the floodway information.

Where appropriate and applicable, the procedures as established between FEMA and the Federal Highway Administration (FHWA) shall be utilized for coordinating or adopting FEMA regulatory requirements on highway encroachments. One such procedure is the conditional letter of map revision (CLOMR). These procedures are indicated in a FHWA memorandum dated June 25, 1982 titled, *Procedures for Coordinating Highway Encroachments on Floodplains with the Federal Emergency Management Agency (FEMA)*, a copy of which is found in Chapter 10, Appendix A. Additional guidance is found in the 1990 publication, *Procedures for Compliance with Floodway Regulations*, which is specific between Pennsylvania and FEMA; a copy is found on the Department's website. Additional regulations on this topic are found in 23 CFR Part 650, Subpart A, "Location and Hydraulic Design of Encroachments on Flood Plains".

5. Identify Significant or Non-Significant Encroachments. The definition, as specified below and indicated in 23 CFR Part 650, Subpart A, Sec 650.105, should be used as the basis to determine if the proposed activity is classified as a "significant encroachment".

A "Significant Encroachment" is a highway encroachment and any direct support of likely base floodplain development that would involve one or more of the following construction or flood-related impacts:

a. A significant potential for interruption or termination of a transportation facility which is needed for emergency vehicles or provides a community's only evacuation route,

b. A significant risk, or

c. A significant adverse impact on natural and beneficial floodplain values.

Any encroachment which does not fall within the definition of "significant encroachment" shall be considered as a "non-significant encroachment". Copies of 23 CFR Part 650 Subpart A titled, "Location and Hydraulic Design of Encroachments on Flood Plains", have been made available to the Engineering Districts and are also accessible through the website for the Government Printing Office.

For any highway action which requires an environmental approval (Categorical Exclusion, Environmental Assessment or Environmental Impact Statement) and which involves encroachment(s) within the limits of the base floodplain (100-year floodplain), each encroachment site shall be field viewed by qualified personnel who are knowledgeable of hydraulic principles and analysis, to determine if the affected encroachment constitutes a "significant encroachment" or "non-significant encroachment". In some cases, certain hydrologic and hydraulic computations and analysis may be needed to assist in making the determination. In determining whether a traverse crossing (bridge or culvert) constitutes a significant or insignificant encroachment, the crossing shall be properly sized in accordance with the Department's hydrologic and hydraulic procedure.

Documentation for the determination of a "significant encroachment" or "non-significant encroachment" should be included in the project files and in the environmental documents submitted for approval. For any highway action that has a potential involvement as "significant encroachment", the plan should be forwarded to FHWA for a determination of the applicability of a Categorical Exclusion.

6. Concern of Regulatory Agencies. The following is a list of the major Federal, State and other agencies directly or indirectly exercising jurisdiction over the Department's highway activities involving encroachments on waterways or floodplains:

a. Federal Highway Administration (FHWA)
b. Corps of Engineers, Department of the Army (USACE)
c. US Coast Guard
d. Federal Emergency Management Agency (FEMA)
e. US Fish and Wildlife Service (USF&W)
f. Environmental Protection Agency (EPA)
g. Natural Resources Conservation Service (NRCS)

h. Pennsylvania Department of Environmental Protection (PA DEP)
i. Pennsylvania Fish and Boat Commission (PFBC)
j. Pennsylvania Historical and Museum Commission (PHMC)
k. Delaware River Basin Commission
l. Susquehanna River Basin Commission
m. Ohio River Basin Commission
n. Local Flood Control Authority (administering USACE's water resources projects)
o. Pennsylvania Game Commission

It is recommended that a pre-application meeting be scheduled with all interested agencies to verify all of the required permits to be obtained.

The above listing may not be all-inclusive. In special cases, certain agencies may also get involved in the decision-making process of some regulatory permits.

It should be noted that not all of the agencies listed above exercise jurisdiction over all types of the Department's activities. It is quite common on many highway actions that only some of the listed agencies are involved in the regulatory process. Minor interagency involvements are anticipated for small roadway drainage structures. The regulatory requirements of each key individual agency are discussed in detail in the subsequent sections of this Chapter.

The Department generally obtains regulatory permits and approvals for proposed actions during final design. At this late stage of project development, it is often necessary to first hold a preliminary consultation with the affected regulatory agencies. This meeting provides an opportunity to discuss activities that may adversely affect the environment, or that the regulatory agencies might consider contrary to public interests. The preliminary consultation can help avoid unnecessary delays in project development and/or the expense of preparing plans that may be rejected. An example of an activity for which a preliminary consultation is strongly recommended is a major channel relocation in a fishable stream.

7. Consult with the FHWA Division Office. The FHWA Division Office should be contacted in regard to any Federally funded highway action for which there may be a potential problem in obtaining a regulatory permit. In some cases FHWA's expertise can be utilized to solve the problem. The US Department of Transportation (DOT) has established separate memoranda of understanding with the USACE and the Coast Guard to expedite the processing of necessary regulatory permits. The DOT has also developed coordination procedures with FEMA on highway encroachments, as mentioned in item 4 above, to achieve cost-effective designs. In the event a consultation with FHWA is deemed necessary, the request should be initiated by the Engineering District and shall be made through the Bureau of Project Delivery.

The following memoranda of understanding were established between FHWA and the USACE and between FHWA and the Coast Guard to expedite interagency coordination:

a. "Memorandum of Agreement between the Department of Transportation and the Department of the Army", signed January 18, 1983 and December 18, 1982.

b. "US Coast Guard/Federal Highway Administration, Memorandum of Understanding on Coordinating the Preparation and Processing of Environmental Documents", signed April 27, 1981 and May 6, 1981 and revised Attachment A dated October 11, 1983.

8. Consult with Regulatory Agencies - by the FHWA and the Department. After a request for consultation with the applicable regulatory agencies is made, FHWA may independently contact, delegate the Department to contact, or join with the Department in contacting these agencies for the purpose of soliciting comments on the proposed highway action. Although both the Department and the regulatory agencies share a common goal of preserving the environment, the former is usually more cost-sensitive than the latter. Mitigation measures must be assessed during planning/preliminary engineering in the design process, and recorded in the environmental documentation process.

9. Public Involvement. The public involvement procedures contained in 23 CFR Part 650 Subpart A generally shall be followed to provide an opportunity for early public review and comment on alternatives that

contain encroachments. The extent of public involvements shall be commensurate with the scope of the project.

10. Location Hydraulic Studies. Location Hydraulic Studies are described in 23 CFR Part 650 Subpart A. These studies usually are performed during the earliest phase of project development for the purpose of evaluating floodplain impacts of various highway alternative alignments. The studies should be summarized in the environmental documents. Location Hydraulic Studies involve field reconnaissance and analysis of data by preliminary design engineers for the purpose of identifying and classifying encroachments. It is highly desirable that the appropriate State and FHWA environmental and engineering personnel be directly involved with the Location Hydraulic Studies, including field trip(s) to probable encroachment sites.

Actual hydraulic computations normally are required and shall include preliminary work considered necessary to delineate floodplain boundaries (in the absence of flood maps) and to evaluate flooding impacts of various alternatives. Each encroachment for each location alternative under consideration should be given substantial treatment in the development of the draft environmental document.

Location Hydraulic Studies generally are required for highway actions that require the preparation of an Environmental Assessment (EA) or Environmental Impact Statement (EIS). For a categorical exclusion (CE), these studies generally are less detailed and are used primarily to determine that there is minimal impact to the floodplain and that no significant floodplain encroachment is expected to occur. The scope, application and requirements for EIS, EA and CE are indicated in the Department's applicable directives. The identification of a significant or non-significant encroachment, as referred to in item 5 above, should be done when and if Location Hydraulic Studies are performed.

11. Preliminary Risk Analysis. Risk Analysis is defined in 23 CFR Part 650 Subpart A as "an economic comparison of design alternatives using expected total costs (construction costs plus risk costs) to determine the alternative with the least total expected cost to the public."

The preliminary risk analysis for a floodplain encroachment should be performed only if this analysis is expected to be a dominant factor in determining the highway alignment. The use of preliminary data is normally sufficient for making this analysis in Location Hydraulic Studies.

12. Compliance with 23 CFR Part 650.111, Paragraphs (a) Through (f). Where applicable and practicable, the format and requirements specified in 23 CFR Part 650.111, Paragraphs (a) through (f) as indicated below, shall be incorporated in location hydraulic studies:

(a) National Flood Insurance Program (NFIP) maps, or information developed by the highway agency if NFIP maps are not available, shall be used to determine whether a highway location alternative includes an encroachment.

(b) Location studies shall include evaluation and discussion of the practicability of alternatives to any longitudinal encroachments.

(c) Location studies shall include discussion of the following items, commensurate with the significance of the risk or environmental impact, for all alternatives containing encroachments and for those actions that would support base floodplain development:

(1) The risks associated with implementation of the action,

(2) The impacts on natural and beneficial floodplain values,

(3) The support of probable incompatible floodplain development (i.e., development that is not consistent with a community's floodplain development plan),

(4) The measures to minimize floodplain impacts associated with the action and

(5) The measures to restore and preserve the natural and beneficial floodplain values impacted by the action.

(d) Location studies shall include evaluation and discussion of the practicability of alternatives to any significant encroachments or any support of incompatible floodplain development.

(e) The studies required by paragraphs (c) and (d) above shall be summarized in environmental review documents prepared pursuant to 23 CFR 771.

(f) Local, State and Federal water resources and floodplain management agencies shall be consulted to determine if the proposed highway action is consistent with existing watershed and floodplain management programs and to obtain current information on development and proposed actions in the affected watersheds.

13. Significant Encroachment. If the Location Hydraulic Studies conclude that a proposed highway action constitutes a significant encroachment as defined in 23 CFR 650 Subpart A, certain procedures as referred to in item 14 below shall be followed to support the choice of this action. A proposed Federally aided action which includes a significant encroachment cannot be approved unless the FHWA finds that the proposed significant encroachment is the only practicable alternative.

14. Only Practicable Alternative Finding. The only practicable alternative finding for the significant encroachment shall be included in the final environmental document and the proposed action shall be supported by the information required and specified in 23 CFR 650.113, Paragraph (a) below:

(a) A proposed action that includes a significant encroachment shall not be approved unless FHWA finds that the proposed significant encroachment is the only practicable alternative. This finding shall be included in the final environmental document (Final Environmental Impact Statement or Finding Of No Significant Impact) and shall be supported by the following information:

(1) The reasons why the proposed action must be located in the floodplain,

(2) The alternatives considered and why they were not practicable and

(3) A statement indicating whether the action conforms to applicable state or local floodplain protection standards.

15. Design Hydraulic Studies. The term "Design Hydraulic Studies", as used in this Manual, refers to the detailed hydrologic and hydraulic studies generally performed during the final design stage. These studies normally require field survey data and they are performed to show that the design of the proposed project is consistent with all relevant design criteria from applicable regulations, standards, and policies such as:

(a) PennDOT design policy (including Design Manuals and Strike-Off-Letters).

(b) Regulatory design requirements including 23 CFR 650.

(c) State and federal regulatory permitting requirements, including PA Title 25 Chapters 105 and 106.

(d) The National Flood Insurance Program (NFIP) and state regulations regarding floodplain management.

(e) 1978 Act 167 stormwater management plans.

The design hydraulic study should list and discuss all applicable design criteria and it should demonstrate that each of these criteria has been met or it should explain how they have been addressed.

In general, design hydraulic studies are required for waterway obstructions and encroachments associated with new highway (roadway and structure) construction and highway reconstruction, rehabilitation or improvement where the hydraulic performance may be affected. Design hydraulic studies may not be required for projects that do not affect the waterway or waterway opening such as minor bridge repair, minor shoulder widening, or replacement-in-kind of an existing superstructure.

16. Hydraulic Computations. Hydraulic computations shall be prepared if the drainage area of the proposed water obstruction is greater than 1.5 km^2 (0.5 mi^2) (see Section 10.3.H).

17. Roadway Drainage Structure Approved by Engineering Districts. Hydraulic computations for roadway drainage structures are approved at the District Office with one copy of the submission and approval sent to the Bureau of Project Delivery for information, according to the procedures specified in Section 10.2. The Bureau of Project Delivery may perform a Quality Assurance review of the submission and forward any comments on major policy deviations to the District Office.

18. Water Obstructions and Encroachments. Waterway obstructions and encroachments are subject to permitting requirements according to 25 PA Code §105; however, a waterway obstruction with a drainage area of 100 acres or less with no wetlands in the floodway (as defined by 25 PA Code §105.1) may be eligible for the waiver from permit requirements in Section 105.12(a)(2) of the regulation (refer to Section 12 of the regulation for additional information regarding waivers). Note that the waiver in Section 105.12(a)(2) does NOT include waterway encroachments. Projects with obstructions that are eligible for waivers from state permitting requirements may still be subject to the waterway permitting regulations of other agencies such as the U.S. Army Corps of Engineers (USACE) under Section 404 of the Clean Water Act (33 USC §§1344). Instances could include obstructions that may affect threatened and endangered species, or that may affect cultural resources, or that are located inside Federal project areas that are administered by the USACE.

Waterway encroachments with drainage areas greater than 100 acres and equal or less than 1 mi^2 may be eligible for a general permit when the conditions specified in the general permit are met. When permits are required, the Engineering District should process either a Joint Permit Application (JPA) or a General Permit (GP) application using the JPA_2 Expert System.

19. General Permits. General Permits from PA DEP are to be obtained when there are plans to construct, operate, maintain, or enlarge any water obstruction or encroachment that will affect a waterway, its 100-year floodway, or any lake, pond, reservoir, or wetland. The type of General Permit needed is related to the proposed activity. A partial list of the types of General Permits is listed below; refer to Section 10.5.A for a complete list. PA DEP's website also provides a complete list of the types of General Permits, along with specific permit limitations.

An application for a General Permit shall be developed and submitted to PA DEP using the JPA_2 Expert System. If the PA DEP region does not accept the electronic submission of the permit, the JPA is to be prepared in the normal manner using the JPA_2 Expert System. After completion, the application should be printed using the print capabilities of the JPA_2 Expert System. Attachments to the application that need to be printed in large format may be printed directly from the JPA_2 Expert System or they may be printed or plotted using conventional procedures.

If the drainage area is 2.6 km^2 (1 mi^2) or less, a general permit (General Permit BDWM-GP-7) may be applicable where the specified conditions are met.

A brief Hydrologic and Hydraulic Report or roadway hydraulic computations, as applicable for "General Permit BDWM-GP-7", shall be prepared for wetland disturbance areas of less than 0.04 ha (0.1 acre). However, for wetland disturbance areas of 0.04 ha (0.1 acre) or more, a joint permit application shall generally be submitted and processed.

"General Permit BDWM-GP-7, Minor Road Crossings" shall be prepared and submitted to the applicable PA DEP Regional Office. Stream enclosures (culverts in excess of 30 m (100 ft) in length) are not eligible for this general permit.

"General Permit BDWM-GP-3, Bank Rehabilitation, Bank Protection and Gravel Bar Removal" shall be prepared and submitted to the applicable PA DEP Regional Office. The use of this General Permit is limited to activities which constitute a single, complete project in and along a continuous reach of stream channel not exceeding 152 m (500 ft).

"General Permit BDWM-GP-8, Temporary Road Crossings" shall be prepared and submitted to the applicable PA DEP Regional Office. The use of this General Permit is for the construction, operation and maintenance of temporary road crossings across regulated waters of the Commonwealth, including wetlands, where no practicable alternatives exist.

"General Permit BWM-GP-11, Maintenance, Testing, Repair, Rehabilitation, or Replacement of Water Obstructions and Encroachments" shall be prepared and submitted to the appropriate PA DEP Regional Office only if the county conservation district is not delegated to review Chapter 105. The use of this General Permit is for minor deviations in the structure's configuration or filled area including those due to changes in materials, construction techniques, current construction codes or safety standards which are necessary to repair, modify, or replace the water obstruction or encroachment.

"Permit (E02-9999) Standards for Bridge Cleaning" shall be prepared and submitted by PennDOT personnel to the appropriate PA DEP Regional Office. Use of this permit is for general maintenance of a bridge that was built a long time ago and there are no waterway permits of record. Information that will be required includes: a narrative, plan sheet, photos, work schedule, location map, PNDI receipt, and sequence of construction.

20. Hydrologic and Hydraulic Report. The nucleus of design hydraulic studies is the Hydrologic and Hydraulic (H&H) Report, which is prepared in accordance with the general guidelines of Section 10.7. Design hydraulic studies shall be performed and processed if they are required to obtain a permit for a waterway obstruction or encroachment (General Permit BDWM-GP-7) when the drainage area exceeds 100 acres. If the drainage area of the proposed project is 1.5 km^2 (0.5 mi^2) or more, the Department requires a Hydrologic and Hydraulic Report to be prepared.

21. Processing of Waterway Approval. A waterway approval for each waterway structure including its necessary regulatory permits shall be processed according to the procedure specified in Section 10.6.

The Department is required by 25 PA Code §105 to obtain a permit from PA DEP for any waterway obstruction or encroachment not subject to a waiver from permitting by the regulation. An individual Section 404 permit may be required from the USACE for a proposed activity whenever the USACE decides to issue individual Section 404 permit, or when the proposed activity is not covered by the Pennsylvania State Programmatic Permit (PASPGP) or a nationwide permit. For any work encroaching on a navigable water of the United States, a Section 9 or Section 10 permit from the US Coast Guard and/or the USACE is required. A joint permit application should be submitted by the Engineering District to PA DEP. If required, PA DEP will transmit a copy of the application to the USACE. Further information on the permit requirements of various regulatory agencies is described in Sections 10.8 and 10.9.

22. Waterway Approval. Receipt of all necessary design approvals and Regulatory permits constitutes a waterway approval to the Engineering District. Additional information regarding the waterway approval is provided in Section 10.5.

23. Fulfillment of Waterway and Floodplain Management Regulations. Compliance with the applicable waterway and floodplain management regulations and procedures described above generally signifies the fulfillment of necessary requirements during the design stage. Most regulatory permits require certain actions be performed during construction and/or subsequent maintenance of the facility. The Engineering District shall review the permit and verify that all applicable conditions and restrictions stipulated in the regulatory permits will be practicably observed.

Although the above procedure is intended to cover the majority of the Department's proposed actions, this procedure and the referenced criteria can be altered on basis of engineering judgment in some instances to address the specific needs of individual projects.

10.2 ESTIMATING PEAK DISCHARGES FOR ROADWAY DRAINAGE FACILITIES

A. General. The first step in designing a drainage facility is to determine the design discharges for the facility. The hydrologic analysis required to estimate discharge can be a major component of the overall drainage design effort. The level of effort required depends on the available data and the complexity of the analytical techniques selected. Regardless of the analytical technique(s) used, hydrologic analysis always involves engineering judgment. Unlike many other aspects of engineering design, the quantification of runoff is a study of a stochastic process.

For many design problems, particularly involving small drainage areas, it is unnecessary to use difficult analytical methods that require extensive time and labor. Fortunately, there are a number of sound and practical methods available to analyze hydrology for the many design problems.

The hydrologic analysis, based on methods recommended herein, provides the basis for the design of roadway drainage structures and facilities such as:

- The best size and shape of pipe or culvert to satisfy field conditions,
- The size for open channels,
- The spacing of inlets,
- Stormwater detention ponds,
- Groundwater infiltration devices, or
- Channel protection.

The hydraulic capacity of some of these features is discussed in Section 10.3.

Proper drainage design is based on anticipating where surface runoff can accumulate and making provisions for the release of excess water at the proper rates to preclude:

- Unusual damage to private property,
- Undue interference with the operation of vehicles or
- An excessive maintenance burden.

The discussion that follows is divided into two sections:

- Accumulation of preliminary data (Section 10.2.B)
- Determination of peak discharge (Section 10.2.C)

The discussion for erosion control of drainage facilities is included in Chapter 13, Erosion and Sediment Pollution Control.

Some reference materials to be used with this section include:

- Highway Hydrology
  Hydraulic Design Series No. 2 (HDS-2)
  US Department of Transportation-Federal Highway Administration

- Introduction to Highway Hydraulics
  Hydraulic Design Series No. 4 (HDS-4), Section 2
  US Department of Transportation-Federal Highway Administration

- Publication 584, *PennDOT Drainage Manual*
  Pennsylvania Department of Transportation

- Urban Drainage Design Manual
  Hydraulic Engineering Circular No. 22 (HEC-22), Chapter 3
  US Department of Transportation-Federal Highway Administration

- Technical Release 55, Urban Hydrology for Small Watersheds
  Natural Resources Conservation Service
  US Department of Agriculture

B. Accumulation of Preliminary Data. Proper drainage analysis requires accumulation of specific information by office and field investigation, before attempting to apply analytical techniques.

It is necessary that plans be prepared indicating topography, preliminary alignment and profile information. In addition, note the following information on prints of project plans:

- All proposed curve and superelevation data.
- Station of cut areas.
- Station of fill areas.
- Station of low points.
- Station of high points.
- Depth of cut and fill (±).
- Areas of relatively flat tangent sections.
- Existing drainage facilities (includes ditch and stream slopes).
- Drainage area from proposed topography as indicated by cross section.
- Area of sharp grades.
- Drainage areas obtainable from USGS maps or other available sources.
- Preliminary location of proposed drainage facilities.
- Known high water marks.
- Horizontal and vertical geometry.

Then review the prints, as prepared above, in the field. Observations on the field trip may be recorded on the prints. Collect data to support decisions such as:

1. In Cut Areas:

- Establish the topographic runoff coefficient to be applied (e.g., Rational "C" or SCS curve number).
- Check drainage areas in field by using odometer readings, etc.
- Is benching necessary?
- Is lined gutter necessary at benches or parallel ditches?
- What is the possibility of erosion? At what location? How can it be corrected?

2. In Fill Areas:

- What is the possibility of erosion?
- Is lined gutter or ditch necessary?
- Can runoff be carried away at toe of slope?

3. Flat Tangent Sections:

- Observe where drainage is to be carried.
- Is the slope sufficient?
- Is it necessary to increase the parallel ditch slope?

4. Existing Drainage Facilities:

- Do they need to be replaced?
- Do they appear to have ample capacity?
- What is salvageable?
- Height of stream banks?

5. Sharp Grades:

- What is erosion possibility?
- Is lined ditch necessary?
- Are pipes necessary?
- Are shoulders and parallel ditches adequate or are sub-drains required?
- Are ditch checks or other erosion control devices apparently necessary?

6. Intersecting Roads:

- Review inlet locations.
- Note warping and crowning of roadways.

After completion of the field investigation, sufficient information will be available for final design of the drainage system. The final design includes the determination of the type of facilities, location, waterway area required and the erosion control device.

C. Estimating Peak Discharge. The Peak Discharge may be defined as the maximum expected rate of flow, created by the design storm, passing at a particular location (inlet, ditch, etc.).

For roadway drainage, the design storm is a selected intensity and duration of rainfall, expressed in millimeters per hour (inches per hour), which tends to occur once during a specified period of years.

The rational formula is the recommended hydrologic method for drainage areas up to 80 ha (200 acres) in size. For additional information, refer to Section 10.6.C.4.b.

The rational formula is as follows:

METRIC	**ENGLISH**
$Q = \frac{CIA}{360}$	$Q = CIA$

where:

Q = Peak discharge (m^3/s (cfs)).

C = Runoff factor (based on drainage area surface type)

I = Rate of rainfall for the time of concentration of the drainage area for a given storm frequency (Rainfall Intensity, mm/h (in/h)).

A = Drainage area (ha (acres)).

It is necessary to adjust the total quantity of water falling on an area (IA) because a certain percentage of water is dissipated by evaporation, transpiration, percolation, ponding and physical characteristics such as sinkholes. Therefore, the runoff factor "C" is introduced into the Rational Equation to account for the dissipated water. The runoff factor "C" is a percentage factor which represents the proportion of the total quantity of water falling on the area that remains as runoff. Suggested values for "C" for various types of drainage areas are presented in Table 10.2.1. The runoff factors presented in Table 10.2.1 provide generally accurate runoff results for most situations. If a higher level detail is desired, the methodology provided in Publication 584, *PennDOT Drainage Manual*, Sections 7.5.C through 7.5.G may be referenced.

Rainfall Intensity "I" curves are presented in Publication 584, *PennDOT Drainage Manual*, Chapter 7, Appendix A, Figures 7A.7 through 7A.16. The curves provide for variation in rainfall intensity according to:

1. Location. Select the curve of a particular region where the site in question is located (reference Publication 584, *PennDOT Drainage Manual*, Chapter 7, Appendix A for determination of the particular region).

2. Storm Frequency. A 10-year storm frequency shall be used for city streets and for all highways with longitudinal drains, side drains, and slope pipes.

For the storm frequency of culvert cross drains and any type of drainage facility in an underpass or depressed section of highway, refer to Section 10.6.E and Table 10.6.1. Additional criteria for the design frequency are indicated in Section 10.3.C.

3. When a pipe is part of a storm sewer system and crosses the roadway, it shall be designed as a storm sewer with the same design storm as the remainder of the drainage system.

4. Greater design frequencies may be justified on individual projects.

For design storms associated with pavement drainage, refer to Section 10.3.A for guidance.

D. Storm Duration. Time of concentration may be defined as the interval of time required for water from the most hydrologically distant portion of the drainage area to reach the point of interest.

1. A 5 minute storm duration may be used when the duration does not result in a maximum expected discharge that exceeds the capacity of a 750 mm (30 in) pipe.

2. If a 5 minute duration results in a pipe size exceeding 750 mm (30 in), use the time of concentration to determine the design storm duration.

TABLE 10.2.1
RUNOFF FACTORS FOR THE RATIONAL EQUATION

TYPE OF DRAINAGE AREA OR SURFACE	RUNOFF FACTOR "C"	
	MINIMUM	MAXIMUM
Pavement, concrete or bituminous concrete	0.75	0.95
Pavement, bituminous macadam or surface-treated gravel	0.65	0.80
Pavement, gravel, macadam, etc.	0.25	0.60
Sandy soil, cultivated or light growth	0.15	0.30
Sandy soil, woods or heavy brush	0.15	0.30
Gravel, bare or light growth	0.20	0.40
Gravel, woods or heavy brush	0.15	0.35
Clay soil, bare or light growth	0.35	0.75
Clay soil, woods or heavy growth	0.25	0.60
City business sections	0.60	0.80
Dense residential sections	0.50	0.70
Suburban, normal residential areas	0.35	0.60
Rural areas, parks, golf courses	0.15	0.30

NOTES

1. Higher values are applicable to denser soils and steep slopes.
2. Consideration should be given to future land use changes in the drainage area in selecting the "C" factor.
3. For drainage area containing several different types of ground cover, a weighted value of "C" factor shall be used.
4. In special situations where sinkholes, stripped abandoned mines, etc. exist, careful evaluation shall be given to the selection of a suitable runoff factor with consideration given to possible reclamation of the land in the future.

E. Time of Concentration. The time of concentration (T_c) may be influenced by:

1. The Type of Terrain over Which the Water Flows. See Table 10.2.2 for recommended average velocities for estimating travel time of overland flow. Other recognized methods such as the Kinematic Wave Equation (Overton and Meadow, 1976) and the NRCS TR-55 segmental method may also be used for determining the overland flow travel time.

2. Stream Velocities. Prior to reaching the point of interest, the water may flow overland and subsequently flow into a stream. The stream velocities shall be calculated using Manning's Equation.

The time of concentration may be determined by the criteria indicated above and considered as representing the duration of a storm. The extent of the drainage area may be determined from the following:

- Photogrammetric Plans
- Roadway Design Plans
- Field Observations
- USGS Maps

Use the highest order of information available and practical. Care shall be taken to include all areas delivering runoff to the point under consideration and to consider physical obstructions, such as existing arches with inadequate capacity inhibiting the delivery of runoff.

Publication 584, *PennDOT Drainage Manual*, Section 7.4 presents a number of methods that may be used to estimate the time of concentration. These methods are intended to calculate the flow velocity within individual segments of the flow path (e.g., shallow concentrated flow, open channel flow, gutter flow, etc.). Hydraulic Design Series No. 2, Second or latest edition, Section 2.6 also provides background data and methodologies on time of concentration.

TABLE 10.2.2 (METRIC)
RECOMMENDED AVERAGE VELOCITIES OF OVERLAND FLOW FOR DETERMINING TIME OF CONCENTRATION

DESCRIPTION OF COURSE OF RUNOFF WATER	SLOPE (%)						
	0-3	4-7	8-10	11-15	16-20	21-25	26-30
	VELOCITIES (m/s)						
Woodland	0.15	0.30	0.45	0.50	0.60	0.80	1.10
Pasture	0.25	0.45	0.65	0.80	0.90	1.25	1.35
Cultivated (Row Crop)	0.30	0.60	0.90	1.10	1.20	1.35	1.50
Pavement	1.50	3.65	4.70	5.50	—	—	—
Natural Draw (Not Well Defined)	0.25	0.75	1.20	1.85	—	—	—

TABLE 10.2.2 (ENGLISH)
RECOMMENDED AVERAGE VELOCITIES OF OVERLAND FLOW FOR DETERMINING TIME OF CONCENTRATION

DESCRIPTION OF COURSE OF RUNOFF WATER	SLOPE (%)						
	0-3	4-7	8-10	11-15	16-20	21-25	26-30
	VELOCITIES (ft/s)						
Woodland	0.5	1.0	1.5	1.7	2.0	2.7	3.5
Pasture	0.8	1.5	2.2	2.6	3.0	4.1	4.5
Cultivated (Row Crop)	1.0	2.0	3.0	3.5	4.0	4.5	5.0
Pavement	5.0	12.0	15.5	18.0	—	—	—
Natural Draw (Not Well Defined)	0.8	2.5	4.0	6.0	—	—	—

10.3 CAPACITY OF ROADWAY HYDRAULIC FACILITIES

Section 10.2 established the criteria for determining how much water is expected to arrive at a particular location. This section is primarily concerned with the removal of the water arriving at a particular location. The drainage facilities should have adequate capacity to assist in removing water from the surface of the highway and adjacent ground.

The drainage facilities that assist in collecting and removing water from the surface of the highway and adjacent ground may be classified as follows:

- Pavement Drainage, Roadside Drainage, and Subsurface Pipes (See Section 10.3.A and Publication 584, *PennDOT Drainage Manual,* Chapter 13).
- Storm Sewer Systems (See Section 10.3.B and Publication 584, *PennDOT Drainage Manual,* Chapter 13).
- Pipe Culverts (See Section 10.3.C and Publication 584, *PennDOT Drainage Manual,* Chapter 9).
- Pavement Base Drains (See Section 10.3.D and Publication 584, *PennDOT Drainage Manual,* Chapter 13).
- Stormwater Management Facilities (See Section 10.3.E and Publication 584, *PennDOT Drainage Manual,* Chapter 14).
- Superstructure Drainage (See Section 10.3.F and Publication 584, *PennDOT Drainage Manual,* Chapter 13).

The capacity of the drainage facilities is measured in terms of discharge and may be determined by the equation of continuity as follows:

$$Q = AV$$

where:

Q = Discharge of water (m^3/s (cfs)). A drainage facility at a particular location shall hydraulically and economically accommodate the peak discharge for the location.

A = Net effective area provided by the drainage facility (m^2 (ft^2)). The effective area is that cross sectional area of the facility which may be used to carry water. It may not be desirable that the entire cross sectional area of the drainage facility be utilized to carry water.

V = Velocity of the water (m/s (ft/s)). The velocity shall generally be determined by Manning's equation.

Manning's equation is as follows:

METRIC

$$V = \frac{1}{n} R^{2/3} S^{1/2}$$

ENGLISH

$$V = \frac{1.486}{n} R^{2/3} S^{1/2}$$

where:

V = Velocity of the water (m/s (ft/s)).

R = Hydraulic radius which is equal to the net effective area (A) divided by the wetted perimeter (WP):

$$R = \frac{A}{WP}$$

The wetted perimeter is the length in meters (feet) of the drainage facility cross section which is wetted by the water.

S = Slope of energy line (for approximation, use water surface slope in wetted stream and stream bed slope in dry stream).

n = The roughness coefficient. Acceptable roughness coefficients are presented in Publication 584, *PennDOT Drainage Manual*, Table 7.5 (for pipes and pavements) and Table 8.1 (for channels, floodplains and earth).

Capacity solutions to these facilities are well documented within FHWA's Urban Drainage Design Manual (Hydraulic Engineering Circular No. 22) and/or Introduction to Highway Hydraulics (Hydraulic Design Series No. 4). Approved computerized methods, which have been developed from material presented in these documents, are acceptable design tools; however, graphical solutions (e.g., TR-55) may be acceptable.

Design criteria for the specific drainage facilities identified above are presented as follows:

A. Pavement Drainage, Roadside Drainage, and Subsurface Pipes. Inundation of the traveled way dictates the level of traffic service provided by a waterway facility. The overtopping flood level for the traveled way identifies the upper limit of serviceability, and it provides one of the important definitions of the term "design flood".

When the peak design flow in a roadside swale or gutter is permitted to spread into a through travel lane, the maximum encroachment of water shall not exceed one-half of the through travel lane and may be further limited based on design speed and class of roadway. For limits of spread on bridges, see Publication 15M, Design Manual, Part 4, *Structures*, Volume 1, Part A, Chapter 3.

Design criteria for specific roadway drainage facilities are as follows:

1. Swales Adjacent to Shoulders in Cut Areas. When swales are provided in cut areas, the water shall not encroach upon the shoulder during a 10-year storm of 5 min duration. Frequent and/or sustained flooding of the subbase shall be avoided.

The maximum velocity, as determined by a normal depth calculation using Manning's equation, shall not exceed the allowable velocity for the swale material as specified in Publication 584, *PennDOT Drainage Manual,* Chapter 8.

Inlets or other hydraulic controls shall be provided as necessary in swales adjacent to shoulders in cut areas to meet:

a. Design requirements regarding roadway encroachments and
b. Design and regulatory requirements regarding water velocity.

The frequency of inundation and/or sustained flooding of the subbase shall be minimized.

Preferred ditch line treatments are found for typical roadway cross sections of interstate and other limited access freeways and of arterials in Chapter 1, Section 1.5. The Combination Storm Sewer and Underdrain should be designed in the manner described in Section 10.3.B.5.

Where subbase cannot be outletted, pavement base drain shall be installed as indicated on the "ALTERNATE SUBSURFACE DRAINAGE TREATMENT" in Chapter 1, Section 1.5.

2. Curbed Sections. The maximum encroachment of water on the roadway pavement shall not exceed half of a through traffic lane during a 10-year storm of 5 min duration. The maximum depth at the curb shall be 25 mm (1 in) below the top of the curb.

3. Depressed Medians. The maximum width of water flowing in a depressed median shall not exceed one-half of the total median width during a 10-year storm of 5 min duration.

4. Shoulders in Cut Areas Without Swales. This design for roadway sections should be avoided; however, if conditions require use of this type of section, then the spread shall not exceed two-thirds of the shoulder width during a 10-year storm of 5 min duration.

5. Ditches. Ditches are graded, open channels that are typically located along the bottom of an embankment slope or at the top of a cut slope. They are generally parallel to the highway and carry runoff coming from the

pavement, shoulders and adjacent areas. They may also be used to protect the highway's boundaries from stormwater originating offsite.

The most common types of ditches are triangular, trapezoidal and rectangular. They are often lined to control velocities and soil erosion. The trapezoidal shape is preferred due to its higher hydraulic efficiency. Triangular shapes require less right-of-way and are readily maintained with a grader. Rectangular shapes are generally used in rock areas.

To facilitate the design of ditches, methods are presented in Publication 584, *PennDOT Drainage Manual,* HDS-4 and HEC-22.

Transverse ditches shall not intersect parallel ditches at right angles. To minimize scour and sedimentation, transverse ditches shall join parallel ditches at an angle of approximately 30º with the parallel ditch.

Erosion and sedimentation control measures for ditches and channels are discussed in Chapter 13, Erosion and Sediment Pollution Control.

In general, a 10-year storm shall be used for the design of ditches; however, the magnitude may be modified to balance with the planned life of the facility and damage potential of the structure or area to be protected, or to meet the design requirements of local municipalities.

For every ditch and channel, a fully dimensioned typical cross section shall be shown on the project drawings. As shown in the Publication 72M, *Roadway Construction Standards*, all excavation involved is either Class 1 or Class 2 Excavation, depending upon the bottom width of the ditch or channel.

Small drainage dikes downstream of inlets can be provided to impede bypass flow in an attempt to cause complete interception of the approach flow. The dikes usually need not be more than a few inches high and shall have traffic safe slopes. The height of dike required for complete interception on continuous grades or the depth of ponding in sag vertical curves can be computed using HEC-22, Chapter 4. Refer to the Publication 72M, *Roadway Construction Standards* for installation of drainage dikes in swales and medians.

6. Inlets and Junctions. Four classes of storm drain inlets generally have been investigated for channel flow interception capacity and are listed below:

a. Grate Inlets. Grate inlets (Types C, D-H, M, and S) perform satisfactorily over a wide range of gutter grades. Grate inlets generally lose capacity with an increase in grade, but to a lesser degree than curb opening inlets. The principal advantage of grate inlets is that they are installed along the roadway where the water is flowing. Their principal disadvantage is that floating trash or debris may clog them. For safety reasons, preference should be given to grate inlets. Additionally, where bicycle traffic occurs or is expected to occur, bicycle safe grates shall be provided. Curved vane grate inlets provide the best capture efficiency.

b. Curb-Opening Inlets. Curb-opening inlets are most effective on flatter slopes, in sags, and with flows which typically carry significant amounts of floating debris. The interception capacity of curb-opening inlets decreases as the gutter grade increases. Consequently, the use of curb-opening inlets may be considered in sags and on grades less than 3%.

c. Combination Inlets. Combination inlets (Type C) result in a high capacity inlet which offers the advantages of both grate and curb opening inlets. When the curb opening precedes the grate in a "sweeper" configuration, the curb-opening inlet acts as a trash interceptor during the initial phases of a storm. Used in a sag configuration, the sweeper inlet can have a curb opening on both sides of the grate.

d. Slotted Drain Inlets. Slotted drain inlets may be considered in areas where it is desirable to intercept sheet flow before it crosses onto a section of roadway. Their principal advantage is their ability to intercept flow over a wide section. However, slotted inlets are very susceptible to clogging from sediments and debris, and are not recommended for use in environments where significant sediment or debris loads may be present. Slotted inlets on a longitudinal grade do have the same hydraulic capacity as

curb openings when debris is not a factor. Publication 408, *Specifications,* Section 617 describes the construction of slotted drains.

Three basic types of grate inlets, namely Types C, M and S, are included in Publication 72M, *Roadway Construction Standards*. Each type of inlet is suited for a particular situation. Type C Inlet is designated for installation in non-mountable curbs; Type M Inlet is designated for installation in median areas and mountable curbs; and Type S Inlet is designated for installation in shoulder swale areas.

A special double size grate inlet, designated as a Type D-H Inlet or Type D-H Level Inlet and indicated in Publication 72M, *Roadway Construction Standards*, can be used to accommodate high storm runoff and debris problems for shoulder areas associated with 3R projects or similar type projects. An alternate single upstream unit inlet may be used by a special provision in those locations where a cost-effective design may be achieved without requiring both the upstream and downstream grates.

Where bicycle traffic is anticipated, a bicycle safe grate shall be used for all inlet units.

On curbed sections immediately adjacent to structures, inlets shall be provided on each side of all structures having spans of 6.0 m (20 ft) or greater for grades less than 1%.

When there are no curbs immediately adjacent to a structure and the structure has a span of 6.1 m (20 ft) or greater, inlets shall be provided on the downgrade side of the structure and placed to permit slope pipes to be utilized without encroaching on the substructure. On longer structures, under similar conditions, in which the structure is at or close to the summit of a vertical curve, inlets shall be provided on both the upgrade and downgrade sides.

7. Inlet Capacities. Inlet capacities for each specific type of inlet under various conditions are specified in the tables and figures as described below:

a. Type C Inlet or Type M Inlet (Mountable Curb). The capacities of Type C Inlets or Type M Inlets (mountable curb) on a continuous grade are presented in Table 10.3.1 for a 100% efficiency and in Figure 10.3.1 through Figure 10.3.4 for various percents of efficiency. The efficiency of an inlet is defined as $(Q_2/Q_1) \times 100\%$, where Q_1 is the channel flow (m^3/s (cfs)) and Q_2 is the rate of flow (m^3/s (cfs)), intercepted by the inlet gratings. The capacities for these inlets under sump conditions are indicated on Table 10.3.2.

b. Type M Inlet (Median) or Type S Inlet. The capacities of Type M Inlets (Median) or Type S Inlets on a continuous grade are presented in Table 10.3.3. The capacities for these inlets under sump conditions are indicated in Figure 10.3.5 and Figure 10.3.6.

c. Type D-H Inlet. The hydraulic capacities of the D-H Inlet and its alternate single unit inlet are indicated in Figure 10.3.7.

INTENTIONALLY BLANK

TABLE 10.3.1
CAPACITY OF TYPE C INLET OR TYPE M INLET (MOUNTABLE CURB)

LONGITUDINAL SLOPE (%)	METRIC		ENGLISH	
	SWALE*	INLET** CAPACITY (m^3/s)	SWALE*	INLET** CAPACITY (cfs)
0.5	1V:12H	0.042	1V:12H	1.5
0.5	1V:16H	0.042	1V:16H	1.5
0.5	1V:24H	0.008	1V:24H	0.3
0.5	1V:48H	0.006	1V:48H	0.2
2.0	1V:12H	0.079	1V:12H	2.8
2.0	1V:16H	0.059	1V:16H	2.1
2.0	1V:24H	0.051	1V:24H	1.8
2.0	1V:48H	0.017	1V:48H	0.6
4.0	1V:12H	0.096	1V:12H	3.4
4.0	1V:16H	0.074	1V:16H	2.6
4.0	1V:24H	0.034	1V:24H	1.2
4.0	1V:48H	0.011	1V:48H	0.4
8.0	1V:12H	0.068	1V:12H	2.4
8.0	1V:16H	0.057	1V:16H	2.0
8.0	1V:24H	0.034	1V:24H	1.2
8.0	1V:48H	0.014	1V:48H	0.5

*Pavement Cross Slope
**100% Efficiency

TABLE 10.3.2 (METRIC)
CAPACITY OF TYPE C INLET OR TYPE M INLET (MOUNTABLE CURB) AT SUMP CONDITION

PAVEMENT CROSS SLOPE	INLET CAPACITY (m^3/s)*	
	TYPE C	TYPE M (MOUNTABLE CURB)
1V:48H	0.057	0.057
1V:24H	0.127	0.099
1V:16H	0.218	0.142
1V:12H	0.317	0.142

*Maximum allowable spread of water on pavement and limitation of curb height were considered in determining the inlet capacity.

TABLE 10.3.2 (ENGLISH)
CAPACITY OF TYPE C INLET OR
TYPE M INLET (MOUNTABLE CURB)
AT SUMP CONDITION

PAVEMENT CROSS SLOPE	INLET CAPACITY (cfs)*	
	TYPE C	TYPE M (MOUNTABLE CURB)
1V:48H	2.0	2.0
1V:24H	4.5	3.5
1V:16H	7.7	5.0
1V:12H	11.2	5.0

*Maximum allowable spread of water on pavement and limitation of curb height were considered in determining the inlet capacity.

INTENTIONALLY BLANK

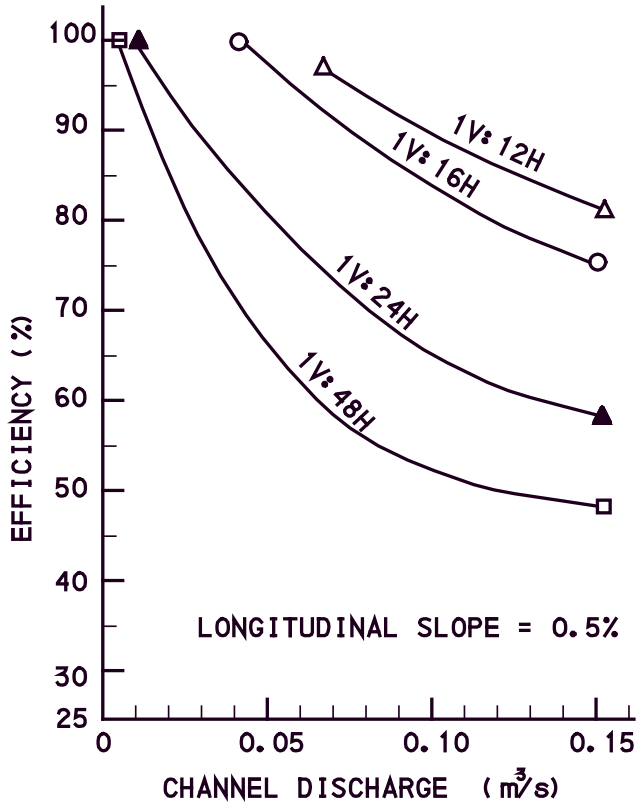

FIGURE 10.3.1 (METRIC)
EFFICIENCY CURVES: CAPACITY OF TYPE C INLET
OR TYPE M INLET (MOUNTABLE CURB)

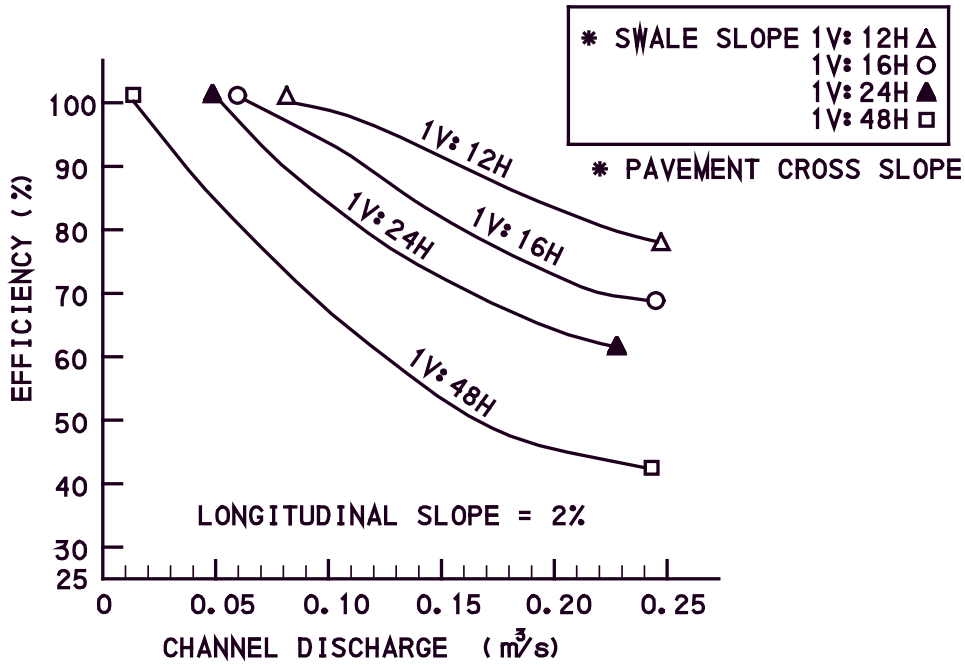

FIGURE 10.3.2 (METRIC)
EFFICIENCY CURVES: CAPACITY OF TYPE C INLET
OR TYPE M INLET (MOUNTABLE CURB)

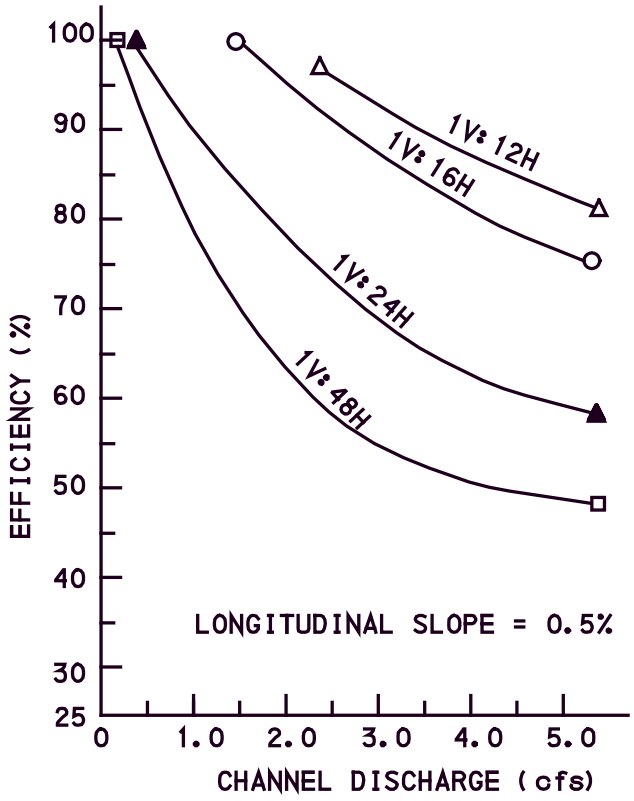

FIGURE 10.3.1 (ENGLISH)
EFFICIENCY CURVES: CAPACITY OF TYPE C INLET OR TYPE M INLET (MOUNTABLE CURB)

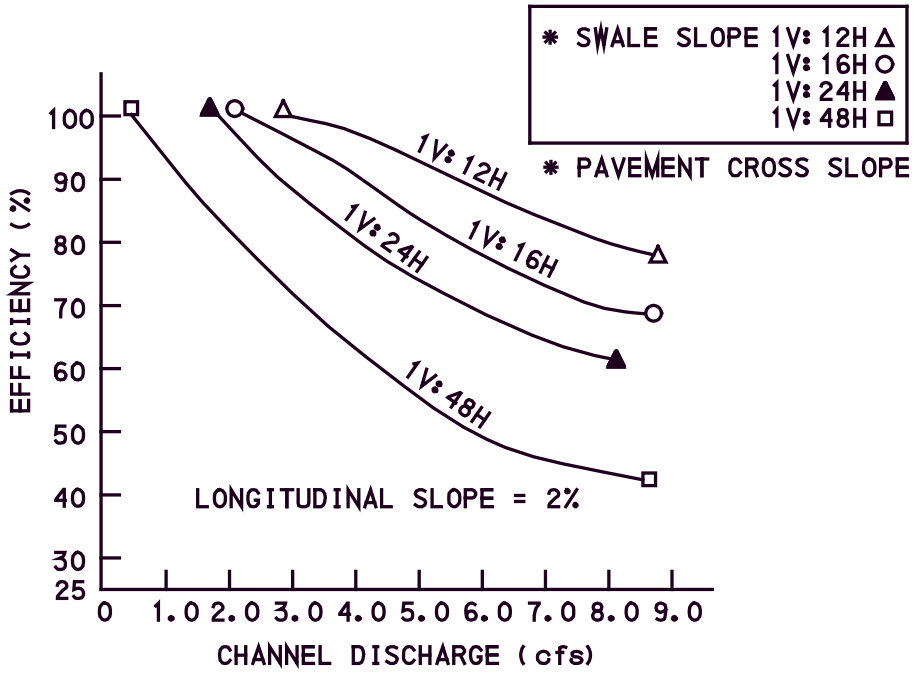

FIGURE 10.3.2 (ENGLISH)
EFFICIENCY CURVES: CAPACITY OF TYPE C INLET OR TYPE M INLET (MOUNTABLE CURB)

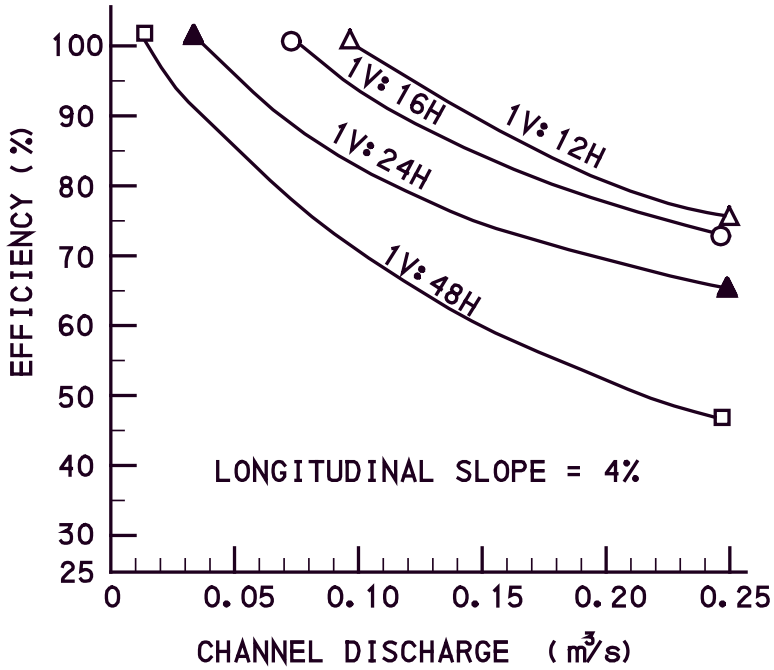

FIGURE 10.3.3 (METRIC)
EFFICIENCY CURVES: CAPACITY OF TYPE C INLET OR TYPE M INLET (MOUNTABLE CURB)

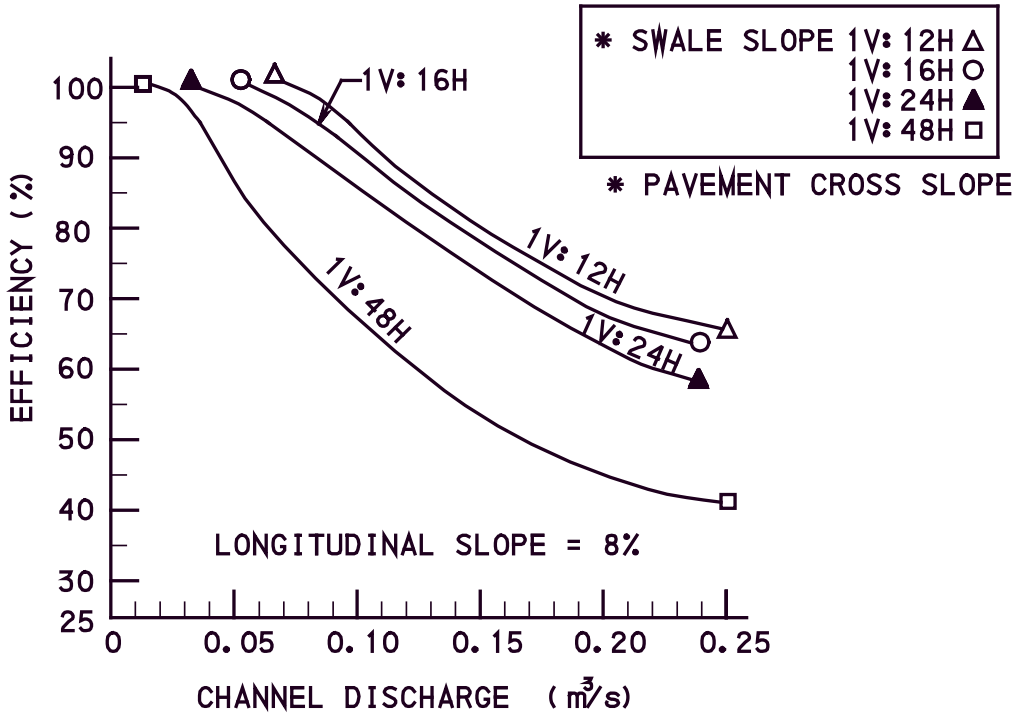

FIGURE 10.3.4 (METRIC)
EFFICIENCY CURVES: CAPACITY OF TYPE C INLET OR TYPE M INLET (MOUNTABLE CURB)

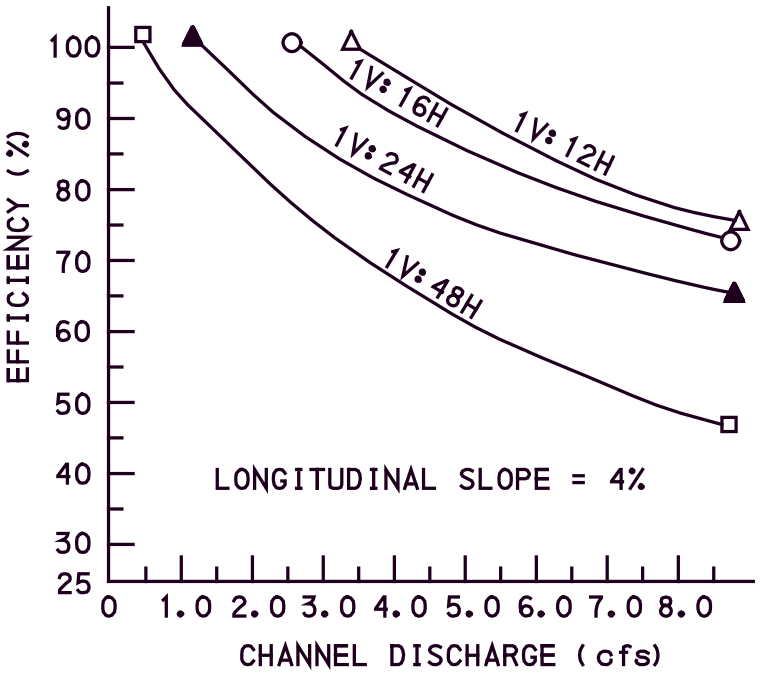

FIGURE 10.3.3 (ENGLISH)
EFFICIENCY CURVES: CAPACITY OF TYPE C INLET OR TYPE M INLET (MOUNTABLE CURB)

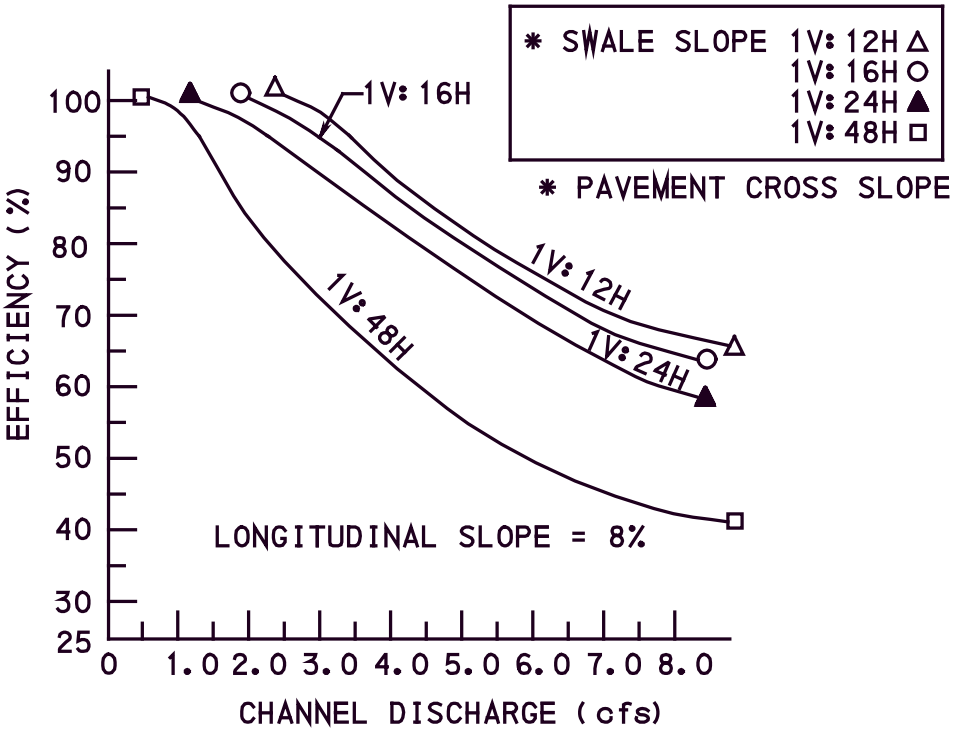

FIGURE 10.3.4 (ENGLISH)
EFFICIENCY CURVES: CAPACITY OF TYPE C INLET OR TYPE M INLET (MOUNTABLE CURB)

TABLE 10.3.3 (METRIC)
CAPACITY OF TYPE M INLET (MEDIAN)
OR TYPE S INLET

SLOPES			INLET CAPACITY WITHOUT DIKE (m^3/s)	INLET CAPACITY WITH DIKE (m^3/s)*		
LONGITUDINAL	SWALE	BACK		0.30 m DEPTH	0.25 m DEPTH	0.15 m DEPTH
0.5%	1V:12H	1V:2H	0.088	0.484	0.385	0.286
		1V:4H	0.102	0.473	0.379	0.286
		1V:6H	0.119	0.464	0.379	0.292
		1V:8H	0.125	0.459	0.377	0.292
		1V:12H	0.130	0.479	0.391	0.306
	1V:6H	1V:2H	0.167	0.470	0.394	0.320
		1V:4H	0.238	0.470	0.411	0.354
		1V:6H	0.255	0.470	0.416	0.362
		1V:8H	0.218	0.462	0.402	0.340
		1V:12H	0.119	0.464	0.379	0.292
2.0%	1V:12H	1V:2H	0.099	0.354	0.292	0.227
		1V:4H	0.099	0.371	0.303	0.235
		1V:6H	0.099	0.433	0.354	0.275
		1V:8H	0.102	0.433	0.351	0.269
		1V:12H	0.105	0.498	0.399	0.303
	1V:6H	1V:2H	0.161	0.467	0.391	0.314
		1V:4H	0.218	0.462	0.402	0.340
		1V:6H	0.255	0.450	0.399	0.351
		1V:8H	0.207	0.464	0.399	0.344
		1V:12H	0.099	0.433	0.354	0.275
4.0%	1V:12H	1V:2H	0.045	0.283	0.224	0.164
		1V:4H	0.057	0.306	0.244	0.181
		1V:6H	0.096	0.371	0.303	0.235
		1V:8H	0.091	0.365	0.295	0.227
		1V:12H	0.091	0.379	0.309	0.235
	1V:6H	1V:2H	0.178	0.337	0.297	0.258
		1V:4H	0.227	0.388	0.348	0.306
		1V:6H	0.246	0.416	0.374	0.331
		1V:8H	0.210	0.416	0.365	0.312
		1V:12H	0.096	0.371	0.303	0.235
8.0%	1V:12H	1V:2H	0.042	0.261	0.207	0.153
		1V:4H	0.057	0.249	0.201	0.153
		1V:6H	0.079	0.263	0.218	0.173
		1V:8H	0.076	0.258	0.212	0.167
		1V:12H	0.068	0.269	0.218	0.167
	1V:6H	1V:2H	0.147	0.346	0.297	0.246
		1V:4H	0.176	0.391	0.337	0.283
		1V:6H	0.195	0.399	0.348	0.297
		1V:8H	0.176	0.382	0.331	0.280
		1V:12H	0.079	0.263	0.218	0.173

* Height of dike is dependent on the longitudinal slope, width available and depth of water desired over the inlet grate.

TABLE 10.3.3 (ENGLISH)
CAPACITY OF TYPE M INLET (MEDIAN) OR TYPE S INLET

SLOPES			INLET CAPACITY WITHOUT DIKE (cfs)	INLET CAPACITY WITH DIKE (ft^3/s)*		
LONGITUDINAL	SWALE	BACK		12 in DEPTH	9 in DEPTH	6 in DEPTH
0.5%	1V:12H	1V:2H	3.1	17.1	13.6	10.1
		1V:4H	3.6	16.7	13.4	10.1
		1V:6H	4.2	16.4	13.4	10.3
		1V:8H	4.4	16.2	13.3	10.3
		1V:12H	4.6	16.9	13.8	10.8
	1V:6H	1V:2H	5.9	16.6	13.9	11.3
		1V:4H	8.4	16.6	14.5	12.5
		1V:6H	9.0	16.6	14.7	12.8
		1V:8H	7.7	16.3	14.2	12.0
		1V:12H	4.2	16.4	13.4	10.3
2.0%	1V:12H	1V:2H	3.5	12.5	10.3	8.0
		1V:4H	3.5	13.1	10.7	8.3
		1V:6H	3.5	15.3	12.5	9.7
		1V:8H	3.6	15.3	12.4	9.5
		1V:12H	3.7	17.6	14.1	10.7
	1V:6H	1V:2H	5.7	16.5	13.8	11.1
		1V:4H	7.7	16.3	14.2	12.0
		1V:6H	9.0	15.9	14.1	12.4
		1V:8H	7.3	16.4	14.1	11.8
		1V:12H	3.5	15.3	12.5	9.7
4.0%	1V:12H	1V:2H	1.6	10.0	7.9	5.8
		1V:4H	2.0	10.8	8.6	6.4
		1V:6H	3.4	13.1	10.7	8.3
		1V:8H	3.2	12.9	10.4	8.0
		1V:12H	3.2	13.4	10.9	8.3
	1V:6H	1V:2H	6.3	11.9	10.5	9.1
		1V:4H	8.0	13.7	12.3	10.8
		1V:6H	8.7	14.7	13.2	11.7
		1V:8H	7.4	14.7	12.9	11.0
		1V:12H	3.4	13.1	10.7	8.3
8.0%	1V:12H	1V:2H	1.5	9.2	7.3	5.4
		1V:4H	2.0	8.8	7.1	5.4
		1V:6H	2.8	9.3	7.7	6.1
		1V:8H	2.7	9.1	7.5	5.9
		1V:12H	2.4	9.5	7.7	5.9
	1V:6H	1V:2H	5.2	12.2	10.5	8.7
		1V:4H	6.2	13.8	11.9	10.0
		1V:6H	6.9	14.1	12.3	10.5
		1V:8H	6.2	13.5	11.7	9.9
		1V:12H	2.8	9.3	7.7	6.1

* Height of dike is dependent on the longitudinal slope, width available and depth of water desired over the inlet grate.

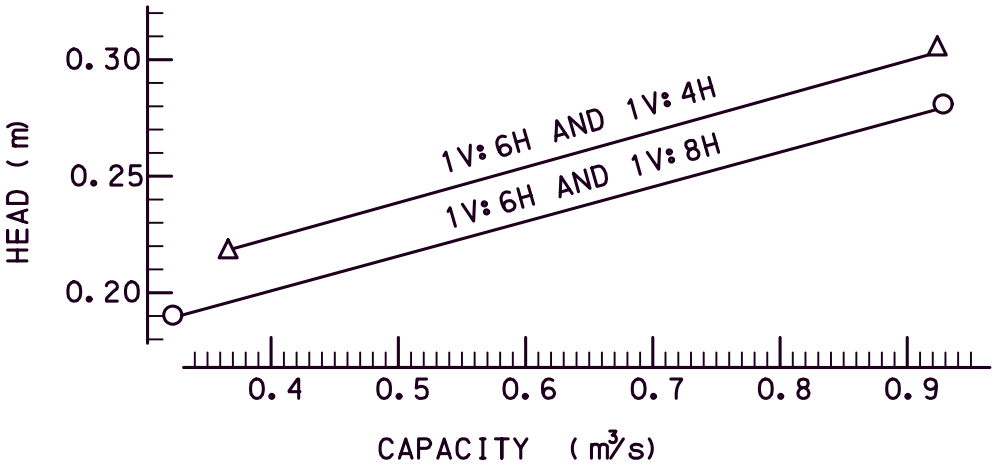

FIGURE 10.3.5 (METRIC)
CAPACITY OF TYPE M INLET (MEDIAN)
OR TYPE S INLET AT SUMP CONDITION

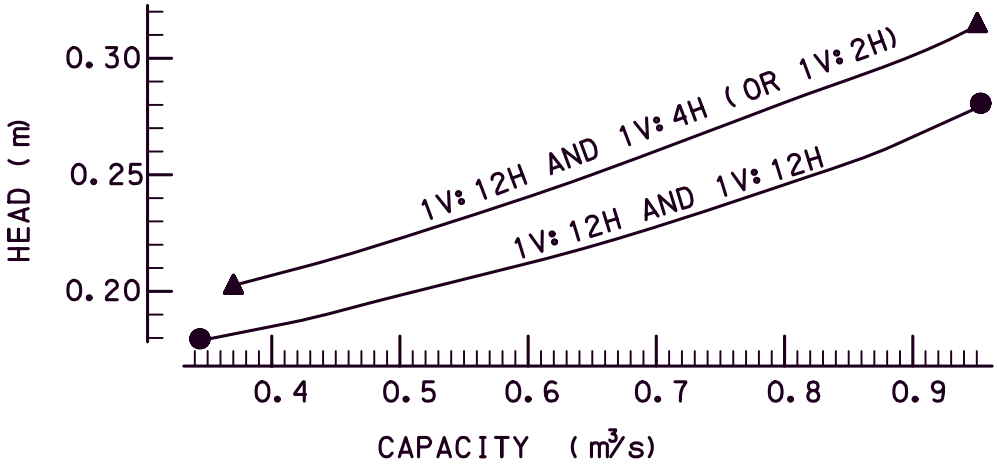

FIGURE 10.3.6 (METRIC)
CAPACITY OF TYPE M INLET (MEDIAN)
OR TYPE S INLET AT SUMP CONDITION

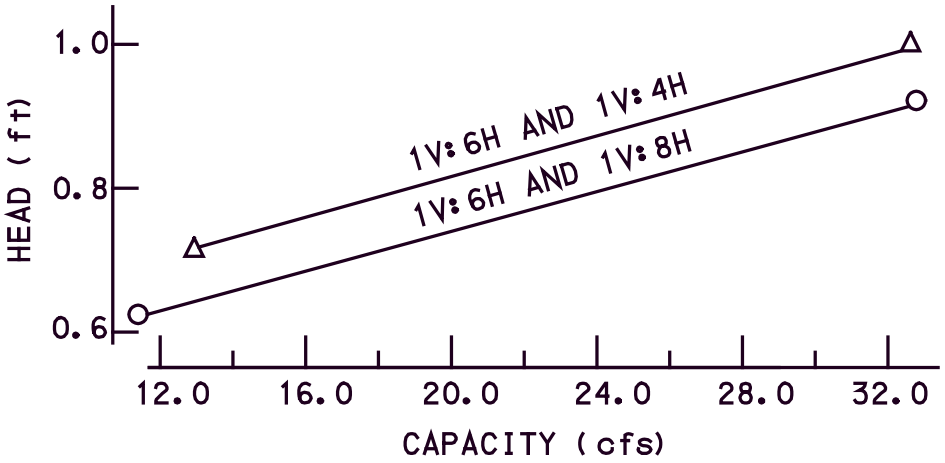

FIGURE 10.3.5 (ENGLISH)
CAPACITY OF TYPE M INLET (MEDIAN)
OR TYPE S INLET AT SUMP CONDITION

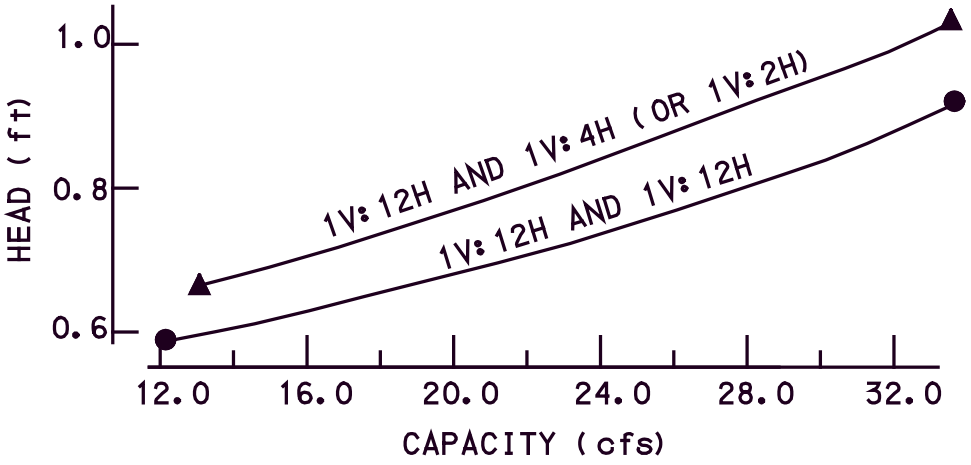

FIGURE 10.3.6 (ENGLISH)
CAPACITY OF TYPE M INLET (MEDIAN)
OR TYPE S INLET AT SUMP CONDITION

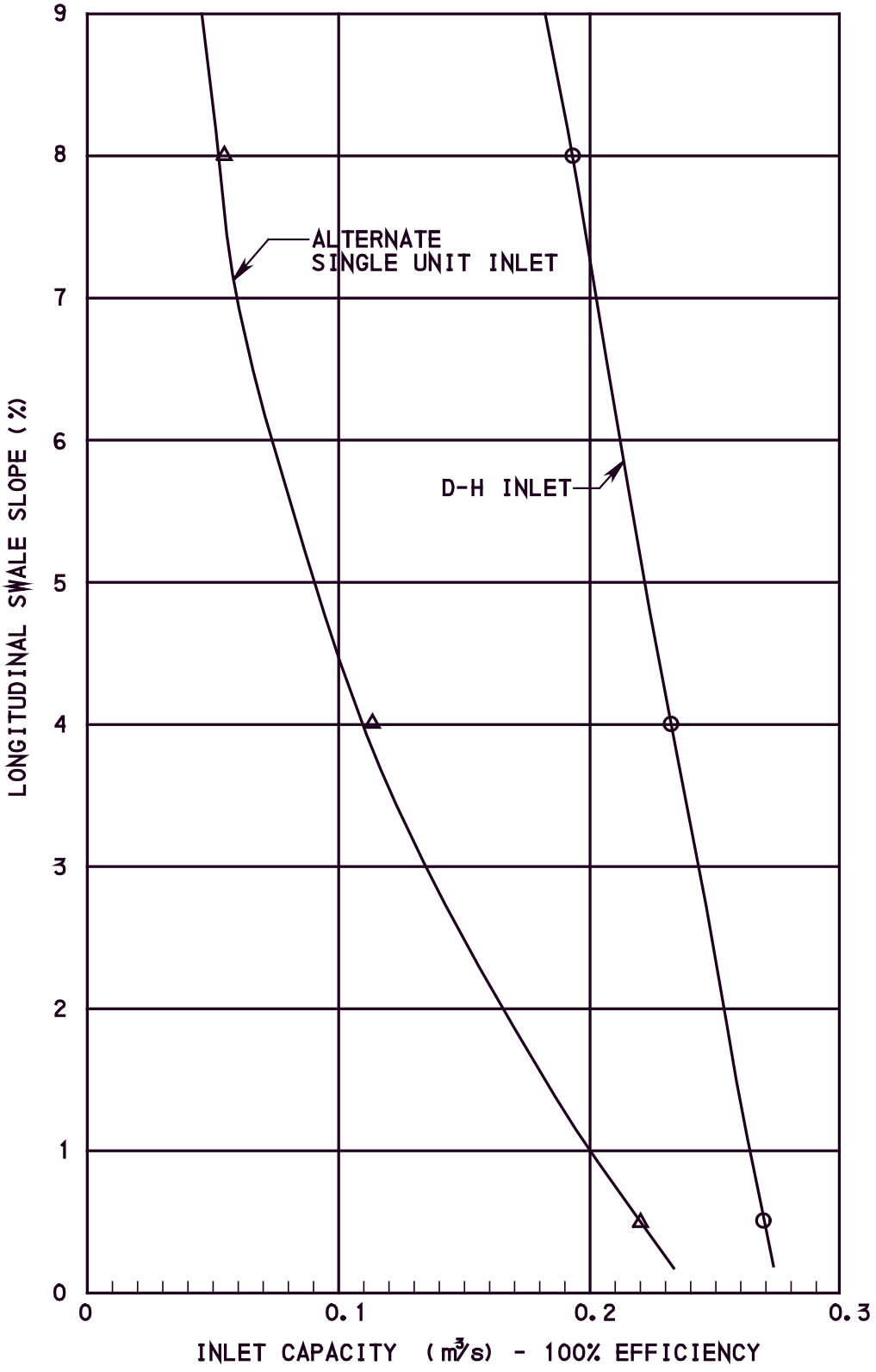

FIGURE 10.3.7 (METRIC)
HYDRAULIC CAPACITIES OF D-H INLET AND ALTERNATE

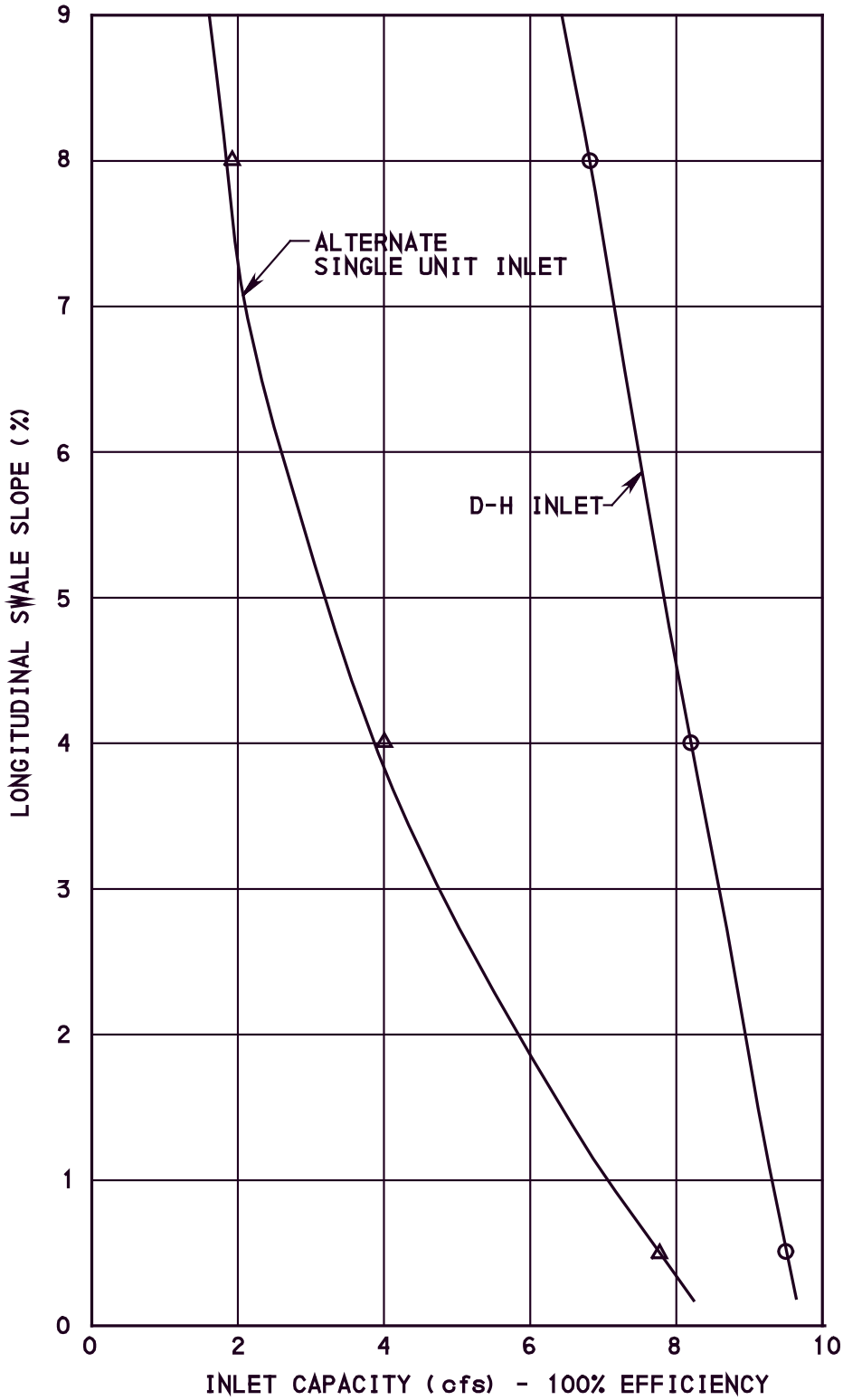

FIGURE 10.3.7 (ENGLISH)
HYDRAULIC CAPACITIES OF D-H INLET AND ALTERNATE

Preliminary inlet spacing may be estimated from the following formula giving due consideration to the percentage of water bypassing the inlet and, on curbed sections, the permissible encroachment of water on the roadway pavement.

METRIC

$$L = \frac{(3.63)(10^6)Q}{CIW}$$

ENGLISH

$$L = \frac{(43{,}560)\ Q}{CIW}$$

where:

L = Inlet spacing (m (ft)).

Q = Discharge capacity of the drainage facility (inlet, shoulder, swale, curb sections, etc.) with the least capacity (m^3/s (cfs)).

C = Rational method coefficient.

I = Rainfall intensity (mm/h (in/h)), generally for a 10-year storm.

W = Average width of contributing area (m (ft)).

Determine the required inside dimensions of the inlet box based on the required reinforced concrete pipe size and pipe opening. Once the minimum inside dimensions are determined, refer to Table 10.3.4 to determine the required inlet box type. For additional information, refer to Publication 72M, *Roadway Construction Standards*.

TABLE 10.3.4
DETERMINING INLET BOX TYPES

INLET BOX TYPE	INSIDE WIDTH mm (in)	INSIDE LENGTH mm (in)	MAXIMUM PERMITTED PIPE DIAMETER ALONG WIDTH mm (in)	MAXIMUM PERMITTED PIPE DIAMETER ALONG LENGTH mm (in)
STANDARD	610 mm (24")	1150 mm (45 1/4")	457 mm (18")	914 mm (36")
4	1220 mm (48")	1220 mm (48")	914 mm (36")	914 mm (36")
5	1524 mm (60")	1524 mm (60")	1066 mm (42")	1066 mm (42")
6	1828 mm (72")	1828 mm (72")	1372 mm (54")	1372 mm (54")
7	2134 mm (84")	2134 mm (84")	1676 mm (66")	1676 mm (66")
8	2438 mm (96")	2438 mm (96")	1828 mm (72")	1828 mm (72")
9	2744 mm (108")	2744 mm (108")	2134 mm (84")	2134 mm (84")
10	3048 mm (120")	3048 mm (120")	2438 mm (96")	2438 mm (96")
D-H	762 mm (30")	2516 mm (99")	457 mm (18")	1828 mm (72")

Final spacing should be confirmed based on allowable spread.

Inlet grates are cast iron or structural steel and shall conform to the dimensional requirements to ensure proper installation (1212 mm × 673 mm (47.75 in × 26.5 in)), as shown on Publication 72M, *Roadway Construction Standards*. A bicycle-safe grate shall be installed for all inlets in areas where bicycle traffic is anticipated, such as curbed roadways in urban areas or for roadways specifically established and signed as bikeways or having bike lanes. Additional information is found in HEC-22.

On curbed sections, an inlet shall be placed at the low point on sag vertical curves with flanking inlets on each side of the low point at a distance not to exceed 30 m (100 ft) or at a grade not greater than 60 mm (0.20 ft) above the sag inlet. The distance between the flanking inlet and the inlet at the low point may be computed using HEC-22, Chapter 4.

On shoulder (without swale) or curb sections, the maximum spacing of inlets shall not exceed 140 m (450 ft), except where a Type D-H Inlet or the alternate single unit inlet is used. Inlet spacing in depressed median sections and shoulder swale areas shall not exceed 280 m (900 ft).

B. Storm Sewer Systems.

1. Preliminary Layout. The first step in storm drain design is to develop a conceptual storm drain layout, including inlet, access hole, and pipe locations. This is usually completed on a plan that shows the roadway, adjacent land use conditions, intersections, and under/overpasses. Surface utilities, underground utilities, and any other storm drain systems shall also be shown. Tentative inlets, junctions, and access locations shall be identified based primarily on obvious project requirements and limitations, such as low points and intersections.

2. Pipe Sizing. Given the preliminary layout, it is possible to begin the hydraulic analysis necessary to size the storm drain system. The method used to size storm pipes is based on a gravity or non-pressure flow concept, which shall generally be adopted for design on the Department's projects. In areas of an extreme flat grade, where a realistic size cannot be attained by means of the usual gravity flow design, a special design based on a pressure flow concept may be considered.

Preliminary pipe size may be calculated using a full-flow assumption given the discharge and pipe slope. This approach does not account for minor losses. If a pressure flow concept is used, minor losses are to be accounted for in the Hydraulic Grade Line (HGL) calculation. An example of a computation table for a storm sewer design layout is shown in Figure 10.3.8 or HEC-22, Section 7.4. Publication 584, *PennDOT Drainage Manual,* Chapter 13 has a detailed HGL computation form.

The minimum diameter of storm pipe shall be 450 mm (18 in) for circular pipe (or equivalent size pipe arch), except pipes under a 7.6 m (25 ft) or greater fill height shall not be less than 600 mm (24 in). Storm pipes are provided in 75 mm (3 in) increments up to the 900 mm (36 in) diameter size and 150 mm (6 in) increments for those exceeding 900 mm (36 in) diameter size.

Avoid abrupt changes in direction or slope of pipe. Where such abrupt changes are required, place an inlet or manhole at the point of change.

The minimum slope in a pipe shall not be less than 0.35%. Place storm pipes on the most economical slope and at the most economical depth.

Provide 300 mm (12 in) minimum cover from the top of pipe barrel to bottom of base course. Refer to Publication 72M, *Roadway Construction Standards*, RC-30M for details concerning minimum cover over pipe under pavements. For special design and modeling of pipes, refer to Publication 15M, Design Manual, Part 4, *Structures*, Appendix H.

Ductile iron pipe may be used when: (1) the minimum cover is at least 75 mm (3 in) but less than 150 mm (6 in) from the top of pipe barrel to the subgrade elevation; and (2) high impact and concentrated heavy loadings are involved. Under these conditions, provide a ductile iron pipe with a minimum 3-edge bearing strength of 17.8 kN/m (4000 lb/ft) times the diameter in meters (feet).

A minimum drop of 50 mm (2 in) shall be provided in the inlet or other junction structure between the lowest inlet pipe invert elevation and the outlet pipe invert elevation. When there is a change in pipe size in an inlet or other junction structure, the elevation of the lowest invert of the incoming pipes shall not be less than that of the outlet pipe.

The Manning's roughness coefficients for corrugated metal pipes are included in Publication 584, *PennDOT Drainage Manual*, Table 7.4.

In general, the size of a downstream storm pipe should not be smaller than that of the upstream storm pipe(s). This requirement is not an absolute criterion and sound engineering judgment should be exercised in making the determination. As an example, it would not be economical to purposely adopt a long stretch of downstream storm pipes equal to or larger than an upstream slope pipe where the size of the slope pipe is hydraulically determined by entrance conditions.

INTENTIONALLY BLANK

ΔAC_O = AC (Contrib. Surface Flow Between Inlets)
ΔAC_B = AC (Bypassing Flow from Previous Inlet)
ΔAC_i = AC (Entering Inlet)
C = Runoff Factor

Sheet No. _____ of _____ By _____ Date _____

SR _____ Chkd By _____ Date _____

INLET NUMBER	STATION	DRAINAGE AREA							TIME		(I)	(Q)	LENGTH OF PIPE	SLOPE OF PIPE	TYPE OF PIPE	MANNING'S "n" VALUE	SIZE OF PIPE	MEAN VELOCITY	PIPE CAPACITY FLOWING FULL	REMARKS
		ΔA	C	ΔAC_O	ΔAC_B	$\Delta AC_O + \Delta AC_B$	ΔAC_i	ΣAC_i	ΔT	ΣT	RAINFALL INTENSITY	DISCHARGE								
—	—	(ha)	—	(ha)	(ha)	(ha)	(ha)	(ha)	(min)	(min)	(mm/h)	(m^3/s)	(m)	(%)	—	—	(mm)	(m/s)	(m^3/s)	—

FIGURE 10.3.8 (METRIC)
COMPUTATION TABLE FOR PRELIMINARY STORM SEWER DESIGN

ΔAC_O = AC (Contrib. Surface Flow Between Inlets)
ΔAC_B = AC (Bypassing Flow from Previous Inlet)
ΔAC_i = AC (Entering Inlet)
C = Runoff Factor

Sheet No. _____ of _____ By _____ Date _____

SR _____ Chkd By _____ Date _____

INLET NUMBER	STATION	DRAINAGE AREA							TIME		(I)	(Q)									
		ΔA	C	ΔAC_O	ΔAC_B	$\Delta AC_O + \Delta AC_B$	ΔAC_i	ΣAC_i	ΔT	ΣT	RAINFALL INTENSITY	DISCHARGE	LENGTH OF PIPE	SLOPE OF PIPE	TYPE OF PIPE	MANNING'S "n" VALUE	SIZE OF PIPE	MEAN VELOCITY	PIPE CAPACITY FLOWING FULL	REMARKS
—	—	(acres)	—	(acres)	(acres)	(acres)	(acres)	(acres)	(min)	(min)	(in/h)	(cfs)	(ft)	(%)	—	—	(in)	(ft/s)	(ft^3/s)	—

FIGURE 10.3.8 (ENGLISH)
COMPUTATION TABLE FOR PRELIMINARY STORM SEWER DESIGN

3. Computation of Hydraulic Grade Line. When pressure flow methods are used to design the pipe system, the Hydraulic Grade Line computations must be provided. Pressure flow through a pipe typically results in the pressure head to be above the top of the pipe (i.e., not equal to the depth of flow in the pipe). In this case, the pressure head rises to a level represented by the hydraulic grade line (HGL). The HGL is used to aid the designer in determining the elevation to which water will rise when the system is operating under design conditions.

Preliminary methods to compute the hydraulic grade line of a pipe system shall adhere to the guidelines indicated in HEC-22, Section 7.5. The HGL shall be established to evaluate overall system performance and ensure that at the design discharge, the storm drain system does not inundate or adversely affect inlets, access holes, or other appurtenances.

The first step in calculating the HGL is to establish the location of all hydraulic controls along the pipe alignment and locations where the water surface shall not be exceeded. These may occur at the inlet, at the outlet, or at intermediate points along the alignment. The water surface elevation of the channel into which the storm drain discharges may establish the maximum tailwater.

The first reach is defined from the downstream control point, or outlet, to the first hydraulic structure or pipe grade break. Subsequent reaches are defined between hydraulic structures and/or grade breaks. The calculation proceeds on a reach-by-reach basis from the given control point and proceeds upstream. The calculation is based on application of the energy equation as major losses are calculated within each reach. The designer shall note that the procedure is based on the assumption of a uniform hydraulic gradient within a conduit reach and that minor losses under supercritical flow are ignored.

4. Alternate Pipe Designs. A summary of acceptable criteria for specifying alternate types of storm or culvert pipes based on the type of use is presented in Table 10.3.5. The selection of pipe alternates is also dependent upon environmental factors. Consideration to the future land use should be given. For example, pipe placed in an area not being mined presently, but which may ultimately be mined, should be designed to handle the mine acid drainage. The criteria indicated in Table 10.3.5 are applicable to all sizes of pipes. The approximate expected service life has been specified as a primary design parameter in the alternate pipe selection criteria indicated in Table 10.3.5.

In those cases where the Department's design criteria specifies that alternate pipes shall be included in the plans and proposal, design computations shall be submitted for each alternate. If the design computations determine that, for one or more of the alternates, different sizes are adequate, the construction drawings and quantities should be developed for the larger size; however, the alternate sizes should be indicated on the tabulation and/or summary sheet when a choice in size exists.

Where the pipe design is sensitive to a certain kind of metal pipe corrugation, the contractor shall be alerted by a "special provision" that a certain type of pipe corrugation is required at a particular location.

If an alternate type and size of pipe is selected and approved as a Value Engineering proposal during construction, the drawings and quantities must be adjusted accordingly by the contractor.

5. Combination Storm Sewer and Underdrain. Longitudinal pipes that are proposed along the low side of pavement or shoulder edges may serve as combination storm sewer and underdrain pipe to eliminate the need for base drains, and shall be designed and constructed in accordance with Publication 72M, *Roadway Construction Standards* and Publication 408, *Specifications*. In these cases, the effect of subgrade drainage should be excluded in the design of the storm sewer system.

6. End Sections. End sections should be used on the inlet end of pipes that accept flows at grade due to their favorable hydraulic characteristics. Headwalls are usually used on the inlet end of culverts. End sections may be used when it is desirable to conform the entrance condition to the fill slope. Both headwalls and end sections perform the same hydraulically on the inlet end. End sections are used on the outlet end of the pipe to reduce the flow depth and outlet velocity. End sections on the outlet end of pipes should be used on traversable slopes (without guide rail) within the clear zone and in highly visible areas; i.e., interchange loops and median swales. For economic reasons, the use of end sections on the outlet end of pipe culverts, at certain locations, is not required.

TABLE 10.3.5
ALTERNATE PIPE SELECTION CRITERIA BASED UPON LOCATION OF DRAINAGE PIPES

LOCATION OF DRAINAGE PIPES		TYPES OF PIPE		NO. OF ALTERNATES REQUIRED
Cross Drains Under Pavement, Shoulder, or Between Curbs; Parallel Storm Sewers Under Pavement or Between Curbs	Fill Height*	Interstate, Freeways, Expressways and Arterials	Collectors and Locals	2
	< 0.6 m (< 2 ft)	100 Years Life (Pipes 1, 2, 5 & 7)	50 Years Life (Pipes 1 & 3 thru 7) **	
	0.6 m - 4.6 m (2 ft - 15 ft) Pipe 10 limited to 0.6 m - 3.5 m (2 ft - 12 ft)	100 Years Life (Pipes 1, 2, 5, 7 & 10)	50 Years Life (Pipes 1 & 3 thru 8) **	
	> 4.6 m (> 15 ft)	100 Years Life (Pipes 1, 2, 5 & 7)	100 Years Life (Pipes 1, 2, 5 & 7)	
Parallel Storm Sewers Outside of Pavement or Curbs	50 Years Life (All pipes in LEGEND)			3
Cross Drains Outside of Pavement, Shoulder or Curbs (Cross Drains in Medians, etc.)	50 Years Life (All pipes in LEGEND except 9)			3
Combination Storm Sewer and Underdrain and Other Special Drainage System	100 Years Life•	Pipe 2, open joint, & perforated pipes 5 & 7		2
	50 Years Life••	Fill Height* < 0.6 m (2 ft)	Pipe 3, open joint, & perforated pipes 4, 5 & 7	3
		Fill Height* ≥ 0.6 m (2 ft)	Pipe 3, open joint, & perforated pipes 4, 5, 7 & 8	
Slope Pipes	50 Years Life (Pipes 4 thru 9)			2
Side Drains (Driveways, etc.)	25 Years Life (All pipes in LEGEND)			3

Separate tables are provided for fill height requirements. Utilize those tables for determination of minimum and maximum fill height requirements. Specified minimum fill heights are applicable to pipes under pavement or between curbs. Specified maximum fill heights are applicable to all installations.

* Fill height is defined as the material from the top of pipe barrel to the riding surface, including the pavement structure. Refer to RC-30M for minimum cover over pipe under pavements.

** 100 Years Life may be used under collectors and locals if desired or necessary based on site conditions.

• For pipes under pavement or between curbs on Interstate/Arterials.

•• For pipes other than under pavement or between curbs on Interstate/Arterials.

LEGEND
(Types of Pipe)

1. DIP = Ductile Iron Pipe.
2. RCP (Type A) = Reinforced Concrete Pipe, heavy duty.
3. RCP (Type B) = Reinforced Concrete Pipe, normal duty (1200 mm (48 in) max).
4. CGSP = Corrugated Galvanized Steel Pipe.
5. CASP = Corrugated Aluminized Steel Pipe.
6. CCGSP = Coated (Polymer) Corrugated Galvanized Steel Pipe.
7. CAAP = Corrugated Aluminum Alloy Pipe.
8. TP (Group I, II, III, IV or VI) = Thermoplastic Pipe, Group I, II, III, IV or VI (1500 mm (60 in) max). Thermoplastic Pipe Groups are defined in Publication 408, *Specifications*, Section 601.
9. TP (Group V - Corr PE) = Thermoplastic Pipe, Group V - Corrugated Polyethylene (900 mm (36 in) max). Thermoplastic Pipe Groups are defined in Publication 408, *Specifications*, Section 601.
10. TP (Group VII) = Thermoplastic Pipe, Group VII (1500 mm (60 in) max). Thermoplastic Pipe Groups are defined in Publication 408, *Specifications*, Section 601.

TABLE 10.3.5 (CONTINUED)
ALTERNATE PIPE SELECTION CRITERIA BASED UPON LOCATION OF DRAINAGE PIPES

NOTES:

1. Select pipes with specified years life based on the type of drainage installation, class of highway and fill height (cover). The years life indicated (100, 50 and 25) are approximate expected service lives.

2. Pipe alternates may be eliminated for the following reasons: (1) unstable support, (2) high impact and concentrated loading, (3) high embankments, (4) limited clearance, (5) steep gradients, (6) high acidity to alkalinity of soils and water or other corrosive elements, (7) high erosive forces or (8) for other pertinent reasons.

3. For Type 5, 7, and 10 pipe under Interstate, Freeways, Expressways and Arterials with pipe diameters greater than 36 in, specify flowable backfill and a permanent anchorage system (i.e. soil anchors) to be used during installation. For Type 1 and 2 pipe under Interstate, Freeways, Expressways and Arterials with pipe diameters greater than 36 in, specify flowable backfill to be used during installation. This is to reduce the possibility of washouts/buoyancy during flooding events and to ensure resiliency of the system. See RC-30M for additional backfilling guidance.

4. In developing the contract, ensure all pipe alternates should specify the same design life, so as not to introduce differing inspection criteria for installation.

INTENTIONALLY BLANK

7. Energy Dissipators. Energy dissipation may be required to protect the channel downstream of a storm drain outlet. Protection often is required at the outlet to prevent erosion of the outfall bed and banks. Riprap aprons or energy dissipators shall be provided if high velocities are expected.

Refer to Publication 584, *PennDOT Drainage Manual,* Chapter 12 for guidance with designing an appropriate dissipator. The FHWA computer program HY-8 may be used for design calculations for energy dissipation.

8. Maintenance of Existing Pipes. Existing pipes may be selected to remain in place and to function beyond completion of the proposed work. These existing pipes should be inspected by the designer during the design phase to determine if they need to be cleaned. For cleaning existing pipes, the contractor is to follow the specifications presented in Publication 408, *Specifications,* Section 601. The designer shall present the location (stations), length (meters (linear feet)) and size (diameter) of each pipe to be cleaned as part of the project. The listing shall be included on the "Tabulation of Quantities" sheet(s) and "Summary" sheet(s) in the design plans and quantified under one of the following two item descriptions:

- Cleaning Existing Pipe Culverts, Diameters Up to and Including 900 mm (36 in)
- Cleaning Existing Pipe Culverts, Diameters over 900 mm (36 in)

C. Pipe Culverts. The function of a pipe culvert is to convey surface water across or from the highway right-of-way. (For structures within regulated waterways, see Section 10.6.) Pipe culverts are usually covered with embankment and are composed of structural material around the entire perimeter, although some are supported on spread footings with the stream bed serving as the bottom of the culvert. In all cases where drainage is collected by means of a head wall, the pipe shall be designed as a pipe culvert. When a pipe culvert is part of a storm sewer system and crosses the roadway, it shall be designed with the same design storm as the remainder of the system.

The procedure contained in Publication 584, *PennDOT Drainage Manual,* Chapter 9, and in FHWA's Hydraulic Design Series No. 5 (HDS-5), shall be used for the design of pipe culverts.

Specific information about pipe culverts is as follows:

1. Diameters. The minimum diameter of a pipe culvert shall be 450 mm (18 in), except pipes under a 7.6 m (25 ft) or greater fill height shall not be less than 600 mm (24 in). Culverts shall be provided in 150 mm (6 in) increments.

2. Inverts. Inverts of new pipe culverts shall be depressed a minimum of 150 mm (6 in) below stream invert grade at both the inlet and outlet ends, or a minimum of 300 mm (12 in) if required as a condition to obtain the waterway permit.

3. Lengths. Because of the difference between the lengths of metal and non-metal end sections for pipe culverts, the length of connecting pipe can vary. To avoid showing different lengths of the connecting pipe on the plans, the designer should show on the plan only the length of the metal type pipe for all alternatives.

4. Allowable Headwater. In culvert design, headwater is water that effectively ponds at the entrance end of the culvert. The allowable headwater elevation is that elevation above which damage may be caused to adjacent property and/or the roadway. The maximum allowable headwater (HW) is the depth of water, measured from the entrance invert, that can be ponded during the design flood. The surrounding features, flow limitations, and roadway classification must be considered for each situation.

The surrounding features that may limit the allowable headwater include the following:

- Lowest elevation of the roadway adjacent to the ponding area;
- Flowline of the roadway ditch which passes water along the roadway to another drainage basin;
- Upstream property, such as buildings or farm crops, which will be damaged if inundated; and
- Elevation established to delineate floodplain zoning.

Flow limitation factors that can affect the allowable headwater include the following:

- The debris which could plug the structure;
- Excessive ponding which would allow too much silting; or
- High hydrostatic pressure which would cause seepage along the culvert backfill.

The HW/D ratio to be considered for design is the ratio of headwater depth to the diameter, height, or rise of a culvert entrance. The following are the maximum allowable HW/D ratios for the design of new culverts:

- HW/D = 2.0: Circular and elliptical (squash) pipe culverts with diameters (or equivalent diameters) of 750 mm (30 in) or less.

- HW/D = 1.5: Circular and elliptical pipe culverts with diameters greater than 750 mm (30 in) and less than or equal to 1800 mm (72 in), and other culverts with cross sectional areas equal to or less than 2.8 m^2 (30 ft^2).

- HW/D = 1.2: Circular and elliptical pipe culverts with diameters greater than 1800 mm (72 in), and other culverts with cross sectional areas greater than 2.8 m^2 (30 ft^2).

The maximum allowable headwater ratio applies to the design flood, based on roadway classification. The headwater should also be checked for the 100-year flood to ensure compliance with floodplain management criteria. The maximum acceptable outlet velocity should be identified. The headwater should be set to produce acceptable velocities; otherwise, stabilization or energy dissipation should be provided where acceptable velocities are exceeded. For streams with debris issues, trash racks should be considered.

Occasional flowage easement shall normally be obtained for new flooding areas beyond the right-of-way line for the 100-year storm event for flow (Q_{100}). Q_{100} shall be used to be consistent with FEMA requirements and the Pennsylvania Floodplain Management Act. Except for the Interstate Highway, which cannot be inundated at the 50-year storm event for flow (Q_{50}), all classes of highways may be inundated at the design Q if a practicable alternative is not available.

5. Erosion Control. The requirements and provisions of erosion control devices for pipe culvert outlets are specified in Chapter 13, Erosion and Sediment Pollution Control.

D. Pavement Base Drains. Pavement base drains are subsurface drains utilizing perforated or porous pipe installed parallel to the highway. They are used to lower the ground water level, to drain slopes or to drain the pavement structure. The pipe is placed in trenches and surrounded by coarse aggregate that is both pervious to water and capable of protecting the pipe from infiltration by the surrounding soil. Installation details are presented in Publication 72M, *Roadway Construction Standards* and in Chapter 1, Section 1.5.

To provide a functional pavement base drain system, the proper spacing of outlets is important, especially on relatively flat grades. Therefore, the various types of pipe can be made hydraulically equivalent by the proper selection of outlet spacing for each type.

Circular diameters between 100 mm (4 in) and 200 mm (8 in) typically are used and are considered adequate for normal use. Where such pipe is required to connect into existing systems, or if hydraulic circumstances exist that require greater capacities, larger pipe sizes should be specified. Publication 35, *Approved Construction Materials* (Bulletin 15) provides a listing of approved pavement base drains made from various materials.

The following method should be used to determine the maximum functional outlet spacing for pavement base drains. Roughness coefficients for the various types of pipe for pavement base drains are indicated in Table 10.3.6.

Outlet spacing is a function of the pipe diameter, pipe gradient (g) and the anticipated design infiltration rate (I). The maximum functional outlet spacing for various conditions may readily be determined from the nomograph in Figure 10.3.9.

First determine the infiltration rate by multiplying the appropriate 1 hour/1 year frequency precipitation rate obtained from Publication 584, *PennDOT Drainage Manual*, Chapter 7, Appendix A by an adjustment coefficient of 0.50 for asphaltic concrete pavement or 0.67 for portland cement concrete pavement. Enter the left side of the nomograph with the calculated design infiltration rate. Next, draw a line from the design infiltration rate through the appropriate width of pavement or maximum perpendicular drainage distance to the trench. Normally this can be simplified by passing this line through the appropriate number of lanes sloped towards each pavement base drain.

This line intercepts PIVOT LINE (2). Now enter the right side of the nomograph with the pipe gradient value. Generally, the pipe gradient should approximately follow the longitudinal grade of the highway pavement; hence a minimum gradient of 0.5% would apply. Draw a line from the pipe gradient through the pipe diameter and appropriate n-coefficient by type of pipe until it intercepts PIVOT LINE (1). By connecting the points of interception of PIVOT LINES (1) and (2) with a straight line, the maximum functional distance (L) between outlets, in meters (feet), can be obtained.

If the resultant maximum outlet spacing for the given set of conditions is too small to be practically applied on a particular project, the pipe diameter or pipe gradient may be increased or a pipe with a lower n-coefficient selected.

TABLE 10.3.6
ROUGHNESS COEFFICIENT "n"
FOR MANNING'S EQUATION
FOR PAVEMENT BASE DRAINS

MANNING'S "n"	TYPES OF PIPE
0.010	Polyvinyl Chloride (PVC) with Smooth Inner Walls
0.012	Porous Cement Concrete Pipe; Helically Corrugated Circular Metal Pipe (100 mm through 200 mm (4 in through 8 in)); Corrugated High–Density Polyethylene (HDPE) with Smooth Inner Walls
0.015	Corrugated High-Density Polyethylene (HDPE) with Corrugated Inner Walls; Helically Corrugated Circular Metal Pipe (250 mm (10 in))

INTENTIONALLY BLANK

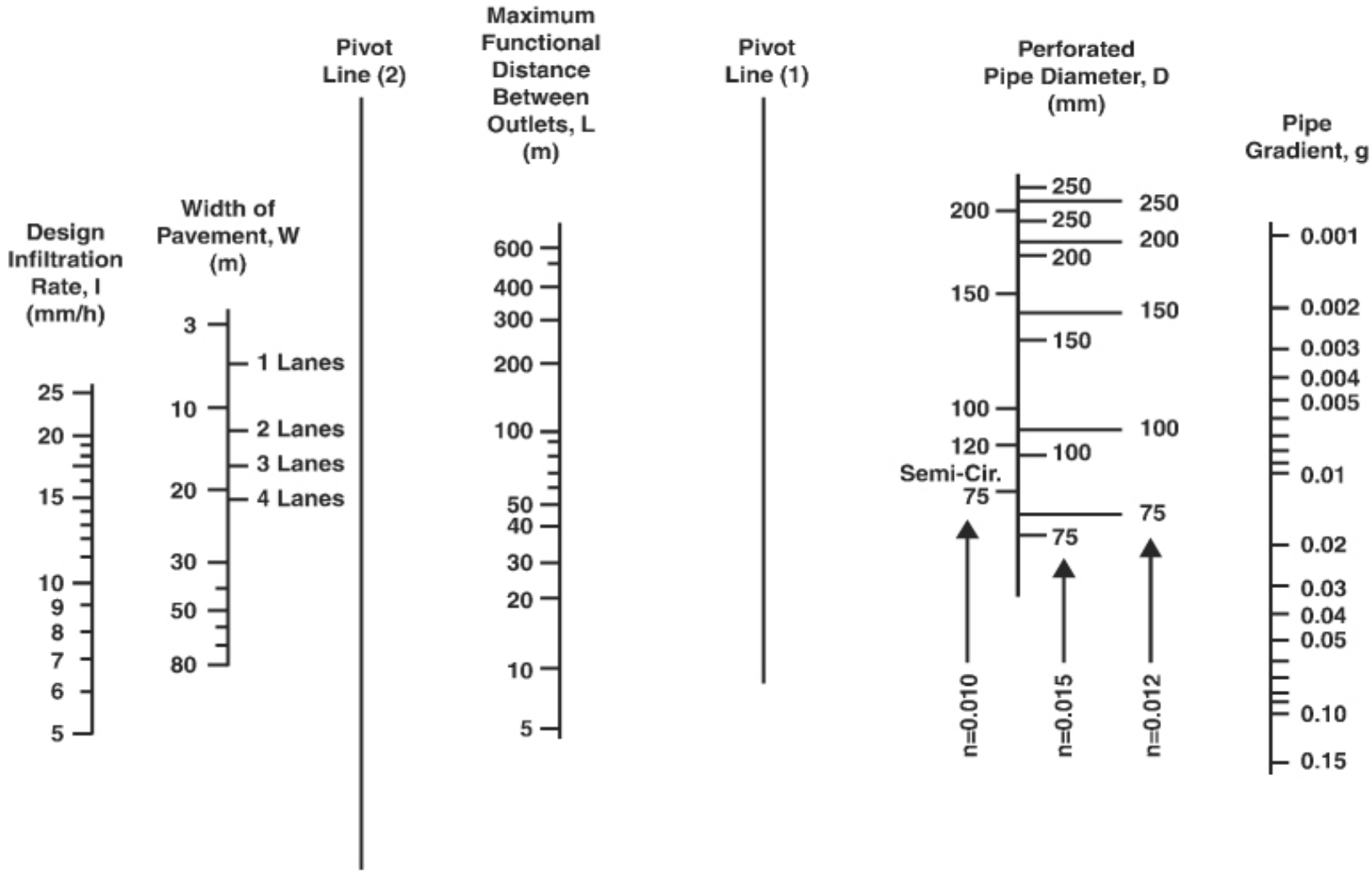

FIGURE 10.3.9 (METRIC)

Nomograph For The Selection Of Maximum Outlet Spacing (L) For Pavement Base Drains

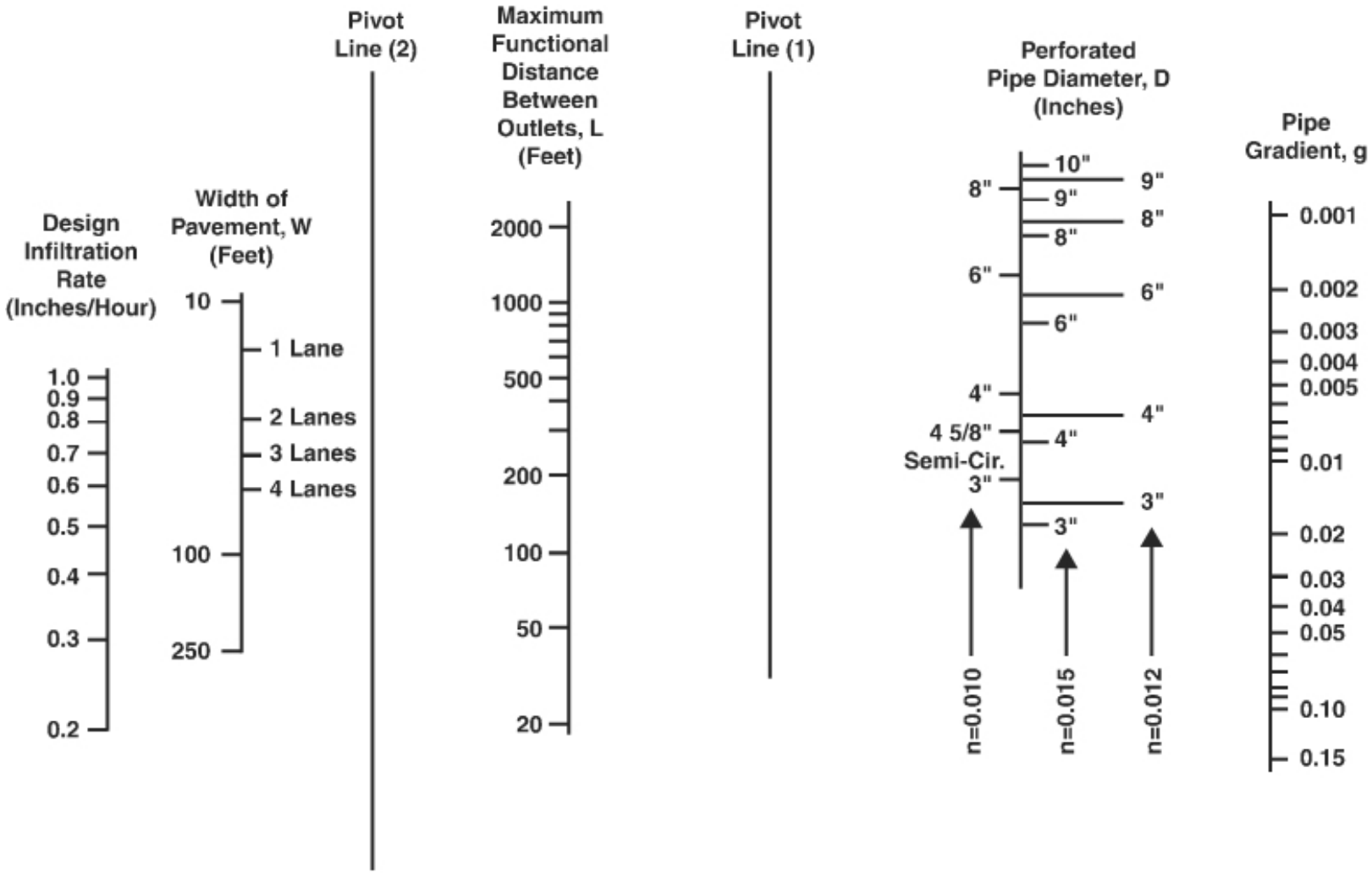

FIGURE 10.3.9 (ENGLISH)

Nomograph For The Selection Of Maximum Outlet Spacing (L) For Pavement Base Drains

Example Problem:

Given: A two-lane asphaltic concrete pavement in Delaware County.

Determine: The maximum functional outlet spacing for a perforated 100 mm (4 in) diameter, smooth-walled PVC pipe (pavement base drain on both sides of roadway). Assume a gradient of 0.5% (0.005).

Solution: From Publication 584, *PennDOT Drainage Manual*, Chapter 7, Appendix A, Table 7A.1, the 1-year, 1 hour intensity would correspond to Map A. From Map A, Figure 7A.1, Delaware County, would fall under Region 5. From Table 7A.6a and (b) the 1-year, 1-hour rainfall would be 29.6 mm/h (1.17 in/h) precipitation rate in Delaware County. This multiplied by an adjustment factor of 0.50 for asphaltic concrete pavement gives an infiltration intensity, I, of 14.8 mm/h (0.59 in/h). Enter the left side of Figure 10.3.9 at the 14.8 (0.59) location. Next extend a line through the 1 lane mark (base drain on both sides of roadway) to PIVOT LINE (2). Now extend a line from the 0.5% (0.005) pipe gradient location on the right side of the nomograph through the 100 mm (4 in), n = 0.010 mark to PIVOT LINE (1). Draw a line from PIVOT LINE (1) to PIVOT LINE (2) and read a maximum outlet spacing of 277.6 m (910 ft) from the intersection point on DISTANCE BETWEEN OUTLETS line (L).

E. Stormwater Management Facilities. See Chapter 13, Erosion and Sediment Pollution Control, and Publication 584, *PennDOT Drainage Manual*, Chapter 14 regarding design of stormwater management facilities.

F. Superstructure Drainage. See Publication 15M, Design Manual, Part 4, *Structures,* for specific instructions regarding superstructure drainage.

G. Roadway Drainage Report. The outline shown below is an example of a Roadway Drainage Report that would be prepared and submitted for the Department's review and approval where an individual water obstruction permit or Highway Occupancy Permit is required. Note that this outline is a guideline and may be modified to meet the specific needs of the project.

1. INTRODUCTION

2. PROJECT DESCRIPTION

3. EXISTING DRAINAGE CONDITIONS

4. PROPOSED DRAINAGE CONDITIONS

5. HYDROLOGIC CRITERIA AND METHODOLOGY
(Describe hydrologic criteria and solution methodology as selected specifically for the project)

6. HYDRAULIC CRITERIA
(Describe hydraulic criteria and solution methodology for each hydraulic structure as applicable to the project)

- **a.** Inlets
- **b.** Storm Pipes
- **c.** Pipe Culverts
- **d.** Ditches and Swales
- **e.** Pavement Base Drains

7. CONCLUSION

8. REFERENCES

9. DRAINAGE PLAN SHEETS WITH AREA DELINEATIONS

10. APPENDICES

Appendix A:	Inlet Calculations
Appendix B:	Storm Pipe Calculations
Appendix C:	Circular Pipe Culvert Calculations
Appendix D:	Ditch and Swale Calculations
Appendix E:	Pavement Base Drain Calculations

H. Hydraulic Computation Approval. Hydraulic design computations shall be required for all pipes with a diameter of 450 mm (18 in) or greater. These pipes refer to any closed conduit which conveys storm water runoff, including culverts, which provide cross drainage of the highway.

Hydraulic computations for roadway drainage structures shall be approved at the District Office with one copy of the submission and approval for all projects sent to the Central Office, Bureau of Project Delivery for information, according to the procedures specified in Section 10.2. The Central Office may perform a Quality Assurance review of the submission and forward any comments on major policy deviations to the District Office. One copy of the plans should accompany the hydraulic computations showing pipe sizes (alternates where required) selected for each location. The pipe sizes and types should be shown on the prints at the pipe location for review purposes.

For those roadway drainage structures where an individual water obstruction permit is required, a brief Hydrologic and Hydraulic Report prepared as per Section 10.7 should be included in the permit application as required by 25 PA Code § 105.

10.4 FILL HEIGHT CRITERIA AND TABLES FOR CONCRETE, METAL AND THERMOPLASTIC PIPES

The design criteria and tables referred to in this section contain the maximum and minimum allowable fill height information for reinforced concrete, metal and thermoplastic pipes. As previously indicated in Table 10.3.5, fill height is defined as the material from the top of the pipe barrel to the riding surface, including the pavement structure. Refer to Publication 72M, *Roadway Construction Standards*, RC-30M for details concerning minimum cover over pipe under pavements. In the tables found in Chapter 10, Appendix B, the type of pipe indicated is based on their corresponding diameters for circular pipes, corresponding rise × span for reinforced concrete elliptical pipes and corresponding span × rise for metal pipe arches.

A. Reinforced Concrete Pipes and Elliptical Pipes. The design criteria and tables including those for allowable fill heights are provided in the Publication 218M, *Standards for Bridge Design*, Drawing BD-636M titled, "Standard, Reinforced Concrete Pipes." Standard fill height tables included in BD-636M are listed in Chapter 10, Appendix B, Table 10.B.1.

B. Metal Pipes and Pipe Arches. Chapter 10, Appendix B, Table 10.B.2 lists those types of metal pipes and pipe arches for which allowable fill height tables have been developed. Chapter 10, Appendix B, Tables 10.B.3 through 10.B.34 provide the maximum and minimum allowable fill height information for commonly used metal pipes and pipe arches. Refer to Publication 15M, Design Manual, Part 4, *Structures,* for pipe diameters or pipe arch spans 2400 mm (96 in) or more.

The allowable fill height table for metal pipes and pipe arches were developed using the following criteria:

γ_e = 2240 kg/m^3 (140 lb/ft^3)
Φ = 0.98 for helical pipes

Min fill heights as per SCI method (DM-4 - 95% compaction)
Live Load = HS-25 trucks (passing distance = 1.2 m (4 ft))
254 mm × 508 mm (10 in × 20 in) wheel footprint
Live Load impact factor, IM = 40(1 - 0.125H)

<u>Load Factor Design</u>
β_e = 1.5 for flexible culverts (Group × loading)

Service Load Check
$\beta_e = 1.0$
SF = 1.3 at end of service life

Service Life
Metal Loss rates: 0.05 mm/yr (2 mil/yr) for plain galvanized pipes
0.025 mm/yr (1 mil/yr) for aluminized steel or aluminum pipes

Treatment Credits: Polymer Coating - 20 yr service life credit when design flow velocity ≤ 1.5 m/s (5.0 ft/s)
Polymer Coating - 10 yr service life credit when design flow velocity > 1.5 m/s (5.0 ft/s)

Recommended Installation Conditions: Steel-soil and water pH within the range of 5.5 to 8.5
Aluminum - soil and water pH within the range of 4 to 8.5

C. Thermoplastic Pipes. The maximum and minimum allowable fill heights for Thermoplastic Pipe Groups I, II, III, IV, V, VI and VII are indicated in Chapter 10, Appendix B, Table 10.B.35. Thermoplastic Pipe Group VII is considered to meet a 100-year service life (design life) requirement. All other thermoplastic pipes are considered to meet a 50-year service life (design life) requirement.

The allowable fill height table for thermoplastic pipes were developed using the following criteria:

γ_e = 2240 kg/m^3 (140 lb/ft^3)
$\Phi_T = 1.0$, $\Phi_s = 0.90$, $\Phi_{bck} = 0.70$, $\Phi_f = 1.0$

Constrained soil modulus for a SN material with 95% compaction
Live Load = PHL-93
254 mm × 508 mm (10 in × 20 in) wheel footprint
Live Load impact factor
Metric Units $IM = 33(1-4.1\times10^{-4}D_E) > 0\%$
U.S. Customary Units $IM = 33(1-0.125D_E) > 0\%$

Load and Resistance Factor Design
$\gamma_{EV} = 1.95$
$\gamma_{WA} = 1.0$

10.5 WATERWAY APPROVAL

For waterway drainage structures discussed in Section 10.3, a waterway approval is considered granted if all necessary regulatory permits or approvals for environmental clearance are obtained. This approval is also required for certain encroachments.

A copy of all Regulatory permits received (including conditions and restrictions) are affixed to and made a part of the Special Provisions in the Contract Proposal.

Several waterway structures may be included in a single Hydrologic and Hydraulic Report provided these structures are involved in the same contract section and/or addressed in the same environmental documents.

Additional information and requirements regarding the various regulatory permits and approvals are described as follows:

A. JPA$_2$ Expert System.

1. Purpose. The JPA$_2$ Expert System is to assist in the preparation of Chapter 105 Permit Applications for submission to PA DEP and other agencies, help users prepare documents in a consistent standardized manner, and submit Permit Applications electronically to PA DEP for review.

Benefits of JPA_2 include the following: more efficient system for obtaining permit approvals, paperless repository, centralized tracking of submissions, formal correspondence between PennDOT and PA DEP, and less attrition of business knowledge.

The new JPA_2 system is purposely similar to its predecessor, including comparable or equivalent functionality for: navigation, security, application creation, document check out and data validation. Enhancements in the new system that improve and streamline processes will require minimal orientation for established JPA users. The addition of PA DEP Facility link, which provides access to the Facility and Sub-Facility data Screens in the PA DEP eFACTS (Environment Facility Application Compliance Tracking System), will be used by PA DEP to inventory details associated with regulated activities.

2. Implementation. The following permit types, including those developed by consultants, must be created and submitted using the JPA_2 Expert System:

- GP-11
- Small Projects
- Standard Applications

NOTE: *Electronic submission using PennDOT's JPA_2 Expert System will be the **only method** to prepare and submit GP-11, Small Projects, and Standard Applications for Department or federally-funded projects to PA DEP for their review.*

If the project is a local project, the use of the JPA_2 Expert System and electronic submission is not currently offered. The electronic submission is not currently allowed because the Department may be improperly identified as the permit applicant. A JPA_2 enhancement to facilitate submitting local applications is underway.

Other permit types such as GP-8, GP-7 and Maintenance permits may be created in the JPA_2 Expert System, but electronic submissions to PA DEP are not currently offered. These permit applications will have to be printed out and the paper copies submitted to the local county conservation district or Regional Office of PA DEP as required for their review. Permit applications shall be prepared and submitted to the appropriate PA DEP Regional Office only if the county conservation district is not delegated to review Chapter 105.

3. Access to JPA_2. The JPA_2 Expert System is a web-based system that runs on Internet Explorer web browser and is available to PennDOT Registered Business Partners. The following URL will take you directly to JPA_2 homepage, where you login using your ECMS user id and password:

www.dot2.state.pa.us/jpa2/jpahome.nsf

Access to JPA_2 Expert System is also available to users already logged into ECMS. On the ECMS homepage, click on "PennDOT Systems," then select the JPA_2 link.

4. Training. PennDOT has developed a JPA_2 eTraining CD and a JPA_2 Training Manual to assist PennDOT personnel and consultants on the use of the new system. Additionally, PA DEP has created Chapter 105 Facility Data eTraining and a Facility Data Training Manual. Links to the JPA Training Manual, PA DEP Facility Data Manual, and the PA DEP Chapter 105 eTraining are available in the JPA_2 Expert System online help system.

B. Obtain Waterway Approval Process. To obtain a waterway approval, the following procedures shall be used for all projects (Federal-Aid and 100% State):

1. The Engineering District shall develop all information required for a JPA_2 to meet the requirements of this Chapter and current directives. The Department's JPA_2 Expert System should be used to develop and submit the application.

The information developed shall be reviewed by the District Environmental Manager and Regulatory Permit Coordinator to assure compliance with all applicable environmental requirements. This information should include the Hydrologic and Hydraulic (H&H) Report as prepared in accordance with the "Guidelines for Preparation of Hydrologic and Hydraulic Report" in Section 10.7.

2. The Engineering District shall complete and sign the appropriate permit application form or letter and send the JPA_2 to the appropriate PA DEP Regional office responsible for issuing the permit coverage. The PA DEP Regional office will forward copies of the application to the appropriate USACE office, if required, PFBC, and other agencies if necessary.

Pursuant to the requirements of Act 14, P.L. 834 (passed in 1984), the Engineering District shall give written notice to each municipality and county (local) government in which the activity is located. Proof of written notice and receipt by local government shall be submitted to PA DEP with the application. The written notice shall be received by the local government at least 30 days before PA DEP takes a final action on the permit application. The Act 14 notification procedure may be applicable to permit amendments.

PA DEP has waived the requirement that an E&S Plan - Erosion and Sediment Pollution Control Plan - or approval be included with a Chapter 105 permit application in order to be considered administratively complete. However, the permit cannot be issued until the Plan or approval is received by PA DEP. See Chapter 10, Appendix H for detailed information.

PA DEP publishes a notice of every complete individual Water Obstruction and Encroachment Permit application in the Pennsylvania Bulletin. This notice provides a 30-day period for submittal of public comments, including requests or petitions for a public hearing. PA DEP also publishes notices of all final actions for individual permit authorizations in the Pennsylvania Bulletin.

3. The Bureau of Project Delivery may perform a Quality Assurance review of hydrologic and hydraulic design of the proposed water obstruction and encroachment.

4. The Bureau of Project Delivery will notify the Engineering District regarding technical deficiencies, if any, for permit applications reviewed.

5. In addition to submission of the JPA_2, the Engineering District shall submit one extra copy of Hydrologic and Hydraulic Report to the Bureau of Project Delivery for transmittal to FHWA for review and approval for the following categories of Federal-Aid projects:

- **a.** Significant or controversial channel changes.
- **b.** Significant or controversial backwater easements.
- **c.** Significant bridge scours.
- **d.** Permanent impoundments or causeways involving roadway embankments.
- **e.** Major bridges with costs of more than 10 million dollars.

6. The Engineering District also shall assume responsibility for processing and obtaining all other regulatory permits (such as the US Corps of Engineers Section 10 and US Coast Guard Bridge Permits for proposed activities in Navigable Waters of the United States).

7. After receipt of the permits or approvals, the Engineering District shall submit one copy of the same to the Bureau of Project Delivery for archiving.

8. A waterway approval is considered granted to the District Executive upon completion of the reviews by the Bureau of Project Delivery, the Pennsylvania Department of Environmental Protection, the Federal Highway Administration, the Pennsylvania Fish and Boat Commission, the US Coast Guard, the US Corps of Engineers and/or other agencies, as required and upon attainments of all necessary regulatory permits or approvals.

9. The project record in JPA_2 will be closed out after the construction project authorized by the waterway permit is completed. For the purpose of closing the record, construction shall be considered completed at the Final Inspection. Procedures for tracking environmental commitments and mitigation are described in Publication 10X, Design Manual, Part 1X, *Appendices to Design Manuals 1, 1A, 1B, and 1C*, Appendix T, Environmental Commitments and Mitigation Tracking System (ECMTS) Process.

C. PA DEP Permit and PFBC Approval. A water obstruction permit requirement is required by 25 PA Code Chapter 105 Regulations. A floodplain permit requirement is also regulated by 25 PA Code Chapter 106 Regulation applicable to any highway or other obstruction, constructed, owned or maintained by the Commonwealth or a political subdivision, located within the 100-year floodplain shown on the floodplain maps approved or promulgated by FEMA. Additional information and guidance concerning the design and permitting of temporary structures is located in Section 10.7.D.1.b.

For municipal structures using Federal-aid funds, the Engineering District shall obtain from the applicable municipal authority a copy of the H&H Report and forward it to the Bureau of Project Delivery for quality assurance review. For municipal structures using funds other than Federal (such as Liquid Fuel Tax funds), the municipalities or their designated agents may submit the Joint Permit Application directly to PA DEP.

Include an Engineer's certification in the H&H Report in accordance with the requirements of the 25 PA Code Chapter 105 and 106 Regulations. Request a written statement from the local municipality affirming that the proposed project is consistent with local stormwater management plans and with local floodplain management plans. If a written statement cannot be obtained, include sufficient documentation with the permit application to demonstrate consistency with local plans implemented under 25 Pa. Code §106.13(b)(7). If the review by PA DEP indicates that an application is complete and satisfactory, PA DEP will issue a "Water Obstruction and Encroachment Permit".

1. A number of standard conditions and restrictions normally are specified in a Water Obstruction and Encroachment Permit issued by PA DEP. The following procedures are suggested:

a. The Special Provisions shall specify that it is the contractor's responsibility to notify the appropriate PA DEP Regional Office in advance of the start of construction.

b. At the time that the Engineering District submits Form CS-4138, Acceptance Certificate, to the Construction Division, the Engineering District shall submit the "Water Obstruction and Encroachment Permit Completion Reports" directly to PA DEP for the entire project on a group basis. Encroachment Completion Report forms are available from the PA DEP Regional Offices.

c. A copy of each PA DEP Permit (including its conditions and restrictions) shall be affixed to and made a part of the Special Provisions in the Contract Proposal. The contractor shall take necessary actions to comply with the applicable conditions and restrictions.

2. Each permit should be pursuant to the requirements of Act 14, P.L. 834 as described in Section 10.5.B.2.

3. The following General Permits may need to be included as part of a Joint Permit Application:

a. BDWW-GP-1: Fish Habitat Enhancement Structures
b. BDWW-GP-2: Small Docks and Boat Launching Ramps
c. BDWW-GP-3: Bank Rehabilitation, Bank Protection and Gravel Bar Removal
d. BDWM-GP-4: Intake and Outfall Structures
e. BDWM-GP-5: Utility Line Stream Crossings
f. BDWM-GP-6: Agricultural Crossings and Ramps
g. BDWM-GP-7: Minor Road Crossings
h. BDWM-GP-8: Temporary Road Crossings
i. BDWM-GP-9: Agricultural Activities
j. BDWW-GP-10: Abandoned Mine Reclamation
k. BWQP-GP-15: Private Residential Construction in Wetlands

4. For those waterway structures to be constructed across stocked trout streams, PFBC generally requires that no work is to be done in the stream channel between March 1 and June 15; however, PFBC may consider the following factors in granting an approval:

a. Amount of work to be done in stream channel.
b. Adequacy of the erosion controls proposed.

c. The sensitivity of the particular stream involved.
d. Duration of the work in the channel.

5. In the event a waiver of the construction period restriction is requested for any bridge project involving a stocked trout stream, include the necessary information reflecting the concern of the above factors in the Hydrologic and Hydraulic Report or bridge plan submitted for a waterway approval, along with a specific request for a waiver. To address PFBC's concerns, it is suggested that the following requirements be specified in the waterway submission if a waiver of the restriction period is requested:

a. Clean rock or other clean granular material shall be used as fill material for temporary stream crossing(s), causeway(s) and/or cofferdam(s).

b. No construction equipment shall be permitted to operate in the water unless prior approval has been obtained from the PFBC.

6. Aids to Navigation (ATON).

a. Many of the Department's bridge replacement projects require aids to navigation which warn waterway users of the changing conditions ahead as well as help guide these users through or around the project area. Under Chapter 113 of the PA Fishing and Boating Regulations, placement of the aids to navigation requires an approved ATON Plan which is processed by the PA Fish & Boat Commission (PFBC). The Department submits ATON plans to the PFBC when Department projects will obstruct any portion of a recreational boating waterway. For the purposes of ATON, a recreational boating waterway is one where motorized boating, canoeing and kayaking are possible during suitable flow conditions. Two warning signs should be placed at the project area (one upstream and one downstream). Sign specifications are shown in Figure 10.5.1. The upstream sign should be within 60 m (200 ft) of the obstruction. The downstream sign should be placed near the obstruction but no further than 60 m (200 ft) from the project area. Both signs should be clearly visible. An additional sign may be warranted if a known upstream launch site exists. This additional sign should also warn boaters of the construction and indicate the distance to the project site.

All projects must be sent to the Waterways Conservation Officer Manager, PFBC, Bureau of Law Enforcement, P.O. Box 67000, Harrisburg, PA 17106-7000. Projects that restrict the entire channel will require the Department to provide safe portage around the construction site. This includes signage using specifications as shown in Figure 10.5.2. Additionally, an area suitable for removing canoes or kayaks from the waterway, a delineated pathway for portage and an area suitable for re-launching should be provided.

Note that projects in waterways predominantly used by motorized boats may also warrant additional warning devices including floating buoy structures that will require submission of PFBC Form 277, "Application for Permit to Install Floating Structures and Private Aids to Navigation," available here: http://fishandboat.com/forms_boating.htm. This form should be included with the ATON plan and not sent as a separate submission. If being submitted by PennDOT, the fee is not applicable. Forms submitted by contractors will require the fee.

b. The following list shows information required for a standard ATON Submission.

(1) Project Description including the following:

(i) SR-Section and Local Name.
(ii) Township and County.
(iii) Waterway.
(iv) Existing and proposed structure type.
(v) Type of obstruction necessary for construction.
(vi) Anticipated let date and timeframe that obstruction will be in place.
(vii) Proposed signage to warn boaters of construction.

(2) USGS Location Map of project area.

(3) Photos upstream and downstream of the structure keyed to a location map.

(4) Color coded plan view showing obstruction, safe waterway opening and approximate sign location.

(5) Example sign template.

(6) Example sign specifications.

For right-of-way purposes, the vast majority of waterways requiring ATON's will meet one of the definitions of navigable waterway as defined under Publication 378*, Right-of-Way Manual*, Appendix C. This gives the Department rights up to the high water line on most projects. In other cases, construction contracts should be specified to require contractors to place temporary ATONs outside the project limit on projects requiring ATON plans. In cases where full width causeways are needed, safe portage must be provided. The District should consider acquiring a temporary construction easement, as necessary, to provide such portage.

The PFBC funded position personnel can make a recommendation regarding waterways requiring ATONs during the pre-application field view. This recommendation must be verified with the PFBC Waterways Conservation Officer Manager at the Bureau of Law Enforcement. If a pre-application field view is not conducted, or if the District is using a GP-11, the District should consult with the PFBC Waterways Conservation Officer Manager at the Bureau of Law Enforcement to determine if an ATON plan is necessary.

Failure to properly comply with ATON requirements could result in fines, project shut-downs or other legal action.

INTENTIONALLY BLANK

FIGURE 10.5.1
EXAMPLE OF ATON SIGN SPECIFICATION FOR PLACEMENT UPSTREAM AND DOWNSTREAM OF PROJECT AREA

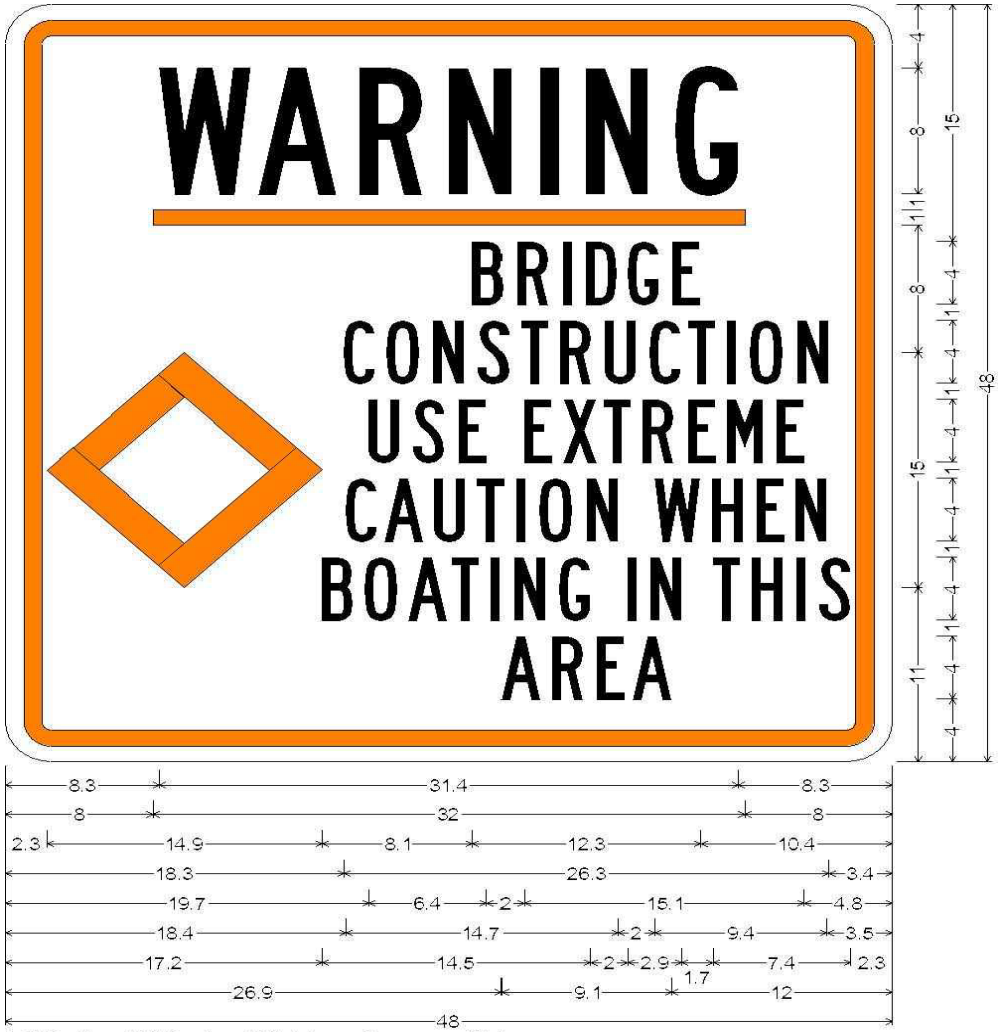

2.5" Radius, 1.0" Border, 1.0" Indent, Orange on White;
"WARNING" Black B; Horizontal Line White; "BRIDGE" Black B; "CONSTRUCTION" Black B;
"USE EXTREME" Black B; "CAUTION WHEN" Black B; "BOATING IN THIS" Black B;
"AREA" Black B;
Table of widths and spaces.

8.3	W 5.0	0.4	A 4.3	1.2	R 3.4	1.5	N 3.3	1.5	I 1.0	1.5	N 3.4	1.5	G 3.4	8.3	
8.0	32.0	8.0													
2.3	◇ 14.9	8.1	B 1.7	0.7	R 1.7	0.8	I 0.5	0.7	D 1.7	0.6	G 1.7	0.7	E 1.5	10.4	
18.3	C 1.7	0.6	O 1.8	0.8	N 1.7	0.7	S 1.7	0.6	T 1.5	0.6	R 1.7	0.7	U 1.7	0.8	C 1.7	0.4	T 1.5	0.6	I 0.5	0.7	O 1.8	0.8	N 1.7	3.4
19.7	U 1.7	0.7	S 1.7	0.8	E 1.5	2.0	E 1.5	0.6	X 1.8	0.4	T 1.5	0.6	R 1.7	0.7	E 1.5	0.6	M 2.0	0.7	E 1.5	4.8	
18.4	C 1.7	0.4	A 2.2	0.6	U 1.6	0.6	T 1.5	0.6	I 0.5	0.8	O 1.8	0.8	N 1.6	2.0	W 2.5	0.6	H 1.7	0.8	E 1.5	0.6	N 1.7	3.5		
17.2	B 1.6	0.6	O 1.9	0.6	A 2.1	0.2	T 1.5	0.6	I 0.5	0.7	N 1.7	0.8	G 1.7	2.0	I 0.5	0.7	N 1.7							
	1.7	T 1.5	0.6	H 1.7	0.7	I 0.5	0.8	S 1.6	2.3															
26.9	A 2.1	0.6	R 1.7	0.7	E 1.5	0.4	A 2.1	12.0																

FIGURE 10.5.2
EXAMPLES OF ATON SIGN SPECIFICATION TO PROVIDE SAFE PORTAGE AROUND A PROJECT AREA

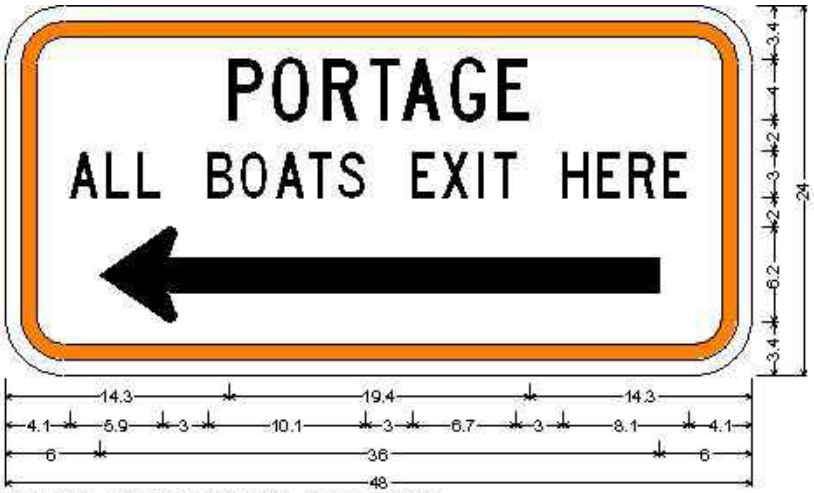

3.8" Radius, 1.0" Border, 1.0" Indent, Orange on White;
"PORTAGE" Black C; "ALL BOATS EXIT HERE" Black C;
Standard Arrow Custom 36.0" X 6.1" 180° Black;
Table of widths and spaces.

14.3	P	2.2	0.7	O	2.3	0.9	R	2.1	0.7	T	2.0	0.3	A	2.5	0.6	G	2.2	0.9	E	2.0	14.3										
4.1	A	1.9	0.5	L	1.5	0.5	L	1.5	3.0	B	1.7	0.5	O	1.7	0.5	A	1.9	0.2	T	1.5	0.5	S	1.6								
			3.0	E	1.5	0.5	X	1.8	0.5	I	0.4	0.5	T	1.5	3.0	H	1.6	0.7	E	1.5	0.5	R	1.6	0.7	E	1.5	4.1				
6.0	36.0	6.0																													

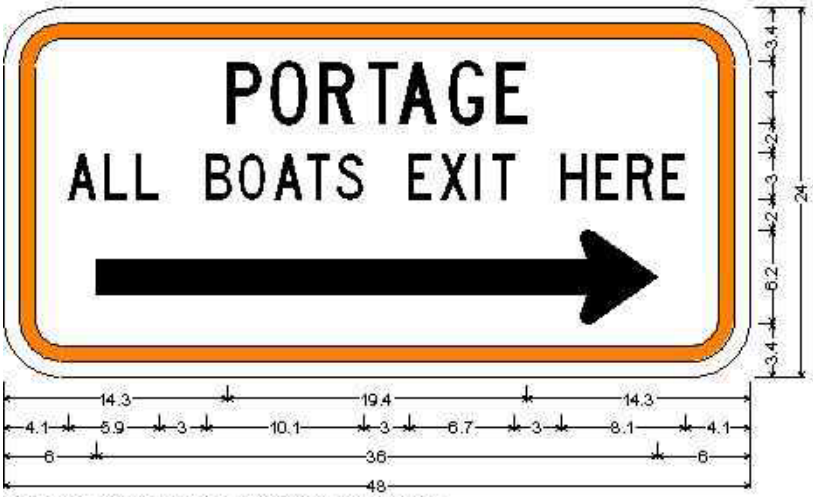

3.8" Radius, 1.0" Border, 1.0" Indent, Orange on White;
"PORTAGE" Black C; "ALL BOATS EXIT HERE" Black C;
Standard Arrow Custom 36.0" X 6.1" 0° Black;
Table of widths and spaces.

14.3	P	2.2	0.7	O	2.3	0.9	R	2.1	0.7	T	2.0	0.3	A	2.5	0.6	G	2.2	0.9	E	2.0	14.3										
4.1	A	1.9	0.5	L	1.5	0.5	L	1.5	3.0	B	1.7	0.5	O	1.7	0.5	A	1.9	0.2	T	1.5	0.5	S	1.6								
			3.0	E	1.5	0.5	X	1.8	0.5	I	0.4	0.5	T	1.5	3.0	H	1.6	0.7	E	1.5	0.5	R	1.6	0.7	E	1.5	4.1				
6.0	36.0	6.0																													

7. Way Finding Signs on Bridges over Water Trails. Water trails are recreational waterways on lakes, rivers, or streams, suitable for canoes, kayaks and small motorized watercraft. Like conventional trails, water trails are recreational corridors between specific locations, containing access points and day-use and/or camping sites for the boating public. In Pennsylvania, water trails are officially designated by the PA Fish and Boat Commission (PFBC).

For all bridge replacement/rehabilitation projects, identification of PFBC designated water trails should be made during the Scoping Field View. A list of designated water trails can be found on the PFBC website at http://fishandboat.com/watertrails/trailindex.htm.

Projects involving these water trails are to include the installation of way finding signs that identify the route/road name of the structure crossing the water trail. The purpose of the sign is to provide aid to boaters in identifying their location on the water trail. The sign(s) should be placed on both the upstream and downstream sides of the bridge and be visible to boaters but should not detract from boaters' experience in the natural setting. If the waterway is 150 ft wide or more, multiple signs should be placed no more than 75 ft apart. On waters less than 150 ft, one sign, placed near mid waterway, is sufficient as long as terrain allows it to be visible from either shoreline. For higher bridges where sign visibility is an issue, signs can be placed on piers or substructures as the span allows. No additional signs are necessary to comply with the 75 ft guideline where not feasible due to the height and span of bridges.

The project manager should include the sign installation in the Environmental Commitment Mitigation Tracking System. The project manager's professional judgment should be used in determining the best method to attach signs on a project-by-project basis. Maintenance of signs is the responsibility of the District. Signs can be examined during bridge inspections or as scheduled otherwise by the District.

A manual SAP order should be placed for an Overhead Roadway Identification (I18-1), blue/white non-reflective sign and include the specific Route/Road Name needed. The sign standard can be found in Publication 236, *Handbook of Approved Signs* at the following link:
http://www.dot.state.pa.us/public/pubsforms/Publications/PUB%20236M/Sign%20Index%20for%20Change%201%20%2011-13%20(nomenclature).pdf

If a route has a PA, US or Interstate designation, that nomenclature should appear on the sign. If the overpass is a four-digit route, the SR designation should be used along with any local name. For municipal roads, the local street or road name should be used. The route number should be listed first followed by the road name. Some examples follow:

- I-79 Raymond P. Shafer Highway
- US 22 William Penn Highway
- PA 51 Morgantown Street
- PA 2 Lackawanna Trail
- PA 501 Lititz Pike
- SR 0504 Appalachian Thruway

INTENTIONALLY BLANK

D. US Coast Guard Bridge Permit. The application of a Coast Guard permit should be submitted at the time when the joint application is processed; however, this timing may vary to suit the need for individual situations. Although the Coast Guard permit may be issued only after the PA DEP permit is granted, the Coast Guard generally begins processing the permit application prior to receipt of the PA DEP permit.

The plans and location of bridges (including approaches, falsework and cofferdams) across Navigable Waters of the United States shall be approved by the US Coast Guard prior to the start of construction. The general procedure for obtaining permits from the US Coast Guard is described in Section 10.8.

As authorized by the applicable laws and regulations, a Coast Guard Bridge Permit may be waived by FHWA for those bridges which are constructed with Federal-aid funds and which cross non-tidal waters that are not used, not susceptible to use in their natural condition, or not susceptible to use by reasonable improvement as a means to transport interstate or foreign commerce. The Coast Guard may waive permitting requirements for those bridges which are constructed with non Federal-aid funds and which cross non-tidal waters as described above.

Since a Coast Guard Bridge Permit is rarely required for the Department's projects, it is recommended that the Engineering District contact the Coast Guard for a preliminary consultation of possible permit requirements on each specific bridge project involving Navigable Waters of the United States.

E. USACE Permits. Complete rules and regulations for various types of USACE Permits are described in 33 CFR Chapter II. The procedure for obtaining permits from the USACE is included in Section 10.9, which also includes an alternative procedure for implementing the time merger of the National Environmental Policy Act (NEPA) procedure with the USACE permit process.

F. FHWA and Other Approvals. FHWA review and approval of the H&H Reports shall be required for any Federally-funded waterway structure identified in item 6 of the waterway approval procedures above. On rare occasions, certain highway activities may require approvals from applicable river basin agencies such as the Susquehanna or Delaware River Basin Commissions, pursuant to interagency agreements between PA DEP and these agencies and pursuant to 18 CFR, Chapters III and VIII.

10.6 CRITERIA FOR APPLICABILITY OF HYDROLOGIC AND HYDRAULIC METHODOLOGIES

A. Introduction. Hydrologic and hydraulic (H&H) requirements are two of the engineering issues that must be considered during the early phases of highway design projects. In order to provide timely completion of highway improvement projects, the PennDOT design community must maintain an adequate level of design proficiency in a variety of H&H methodologies. To ensure that this goal is accomplished, PennDOT has defined a standard "toolbox" of H&H methodologies. The methodologies included in this H&H Toolbox were chosen to ensure that they are the best technical and practicable methodologies available for 80% to 90% of the waterway structures associated with highway design in Pennsylvania.

B. Purpose and Scope. The purpose of this section is to present a list of hydrologic and hydraulic methodologies acceptable to PennDOT for analysis of common highway drainage structures. This policy does not include guidance on topics such as the analysis of pavement drainage and complex storm sewer networks.

This document should enable a designer to make an initial selection of appropriate hydrologic and hydraulic methods or models. For more complete information on the details regarding the assumptions and limitations of specific methods or models, the original documentation associated with each of the methods or models and the comprehensive technical information provided in the FHWA's documentation on hydrology and hydraulics (see Chapter 10, Appendix E) should be used except where Department policy conflicts. Section 10.6.D of this document provides information regarding the selection of H&H methodologies for problems outside the scope of the standard H&H Toolbox.

C. Models, Methodologies and Site Histories. The following sections list the hydrologic and hydraulic methodologies in the H&H Toolbox. These methodologies, when properly selected and applied in engineering analyses, will be acceptable to PennDOT, and are preferable over equivalent alternative methodologies. It is not PennDOT's intention to replace the use of sound engineering judgment when an unlisted methodology is determined

to be superior; however, use of unlisted methodologies should be coordinated carefully with PennDOT at the earliest possible opportunity during the project development process.

The level of accuracy required for a specific hydrologic or hydraulic analysis is a matter of engineering judgment that generally depends on the specific characteristics of each individual project. Factors that tend to control the final accuracy of hydrologic and hydraulic engineering studies include the selection of analytical methods or models and the level of effort invested in data collection and application of the method or model. Such factors generally are negotiated and decided during the early phases of the project.

With respect to selection of methods or models, this document offers general guidelines regarding selection criteria; however, final decisions regarding the suitability of a particular method for a particular project must be determined by engineering judgment on a case-by-case basis.

1. Site Flood History. An analysis of the flood history of an existing structure according to the guidelines contained in Sections 10.7.A and 10.7.B is an essential component of the hydrologic engineering process. Discrepancies between any numerical methodology such as HEC-1, TR-55, the rational formula, or a regression method, and the site history should be considered very carefully and explained very thoroughly.

Site information such as the performance of an existing structure or the local history of flooding provide important data for corroborating the results of the numerical models used in the hydrologic study, especially if one or more peak water-surface elevations can be determined. When the return periods for these high-water events can be estimated, these events can be used to perform a partial calibration of the hydrologic model.

When the known events are smaller than the design event, considerable care is required because the estimate of the design peak flow is an extrapolation from the observed historical data. If the watershed is, or has undergone, development, construction of flood control structures, reforestation, or other changes, since the observed historical events, or if future changes are anticipated, care must be taken to ensure that these factors are appropriately accounted for in the hydrologic study.

2. FEMA Studies. If a project site or its impacts lie within a Federal Emergency Management Agency (FEMA) study area, review the flood discharges reported in the FEMA study and incorporate into the hydrologic analysis. Verify FEMA's flood discharges by an appropriate hydrologic methodology when hydrologic conditions in the basin differ from the conditions described in the FEMA study. It should be remembered that the underlying purpose of a FEMA study is very different from a study to design an opening for a waterway structure; therefore, different levels of detail, and different methodologies may be appropriate for these two types of studies.

The hydrologic and hydraulic models used in the FEMA studies must be evaluated according to current design guidance and current modeling practices for sizing highway waterway structures. For example, the peak flows in a number of Pennsylvania FEMA studies were based on PSU-III. Use of these peak flows would not be acceptable to the Department because the data used to develop these methods is outdated. In these cases, the results of the FEMA study shall be included in the engineering analysis for comparative purposes.

If a stream gage analysis was used to develop the FEMA published flows, conduct a review of the gage analysis. Include the following in this analysis:

- Determination of period of record used in the FEMA gage analysis.
- Assessment of the gage data to determine if there is additional data since the FEMA study.
- Assessment of watershed to determine if there has been significant watershed changes that may impact the gage data (i.e., flood control, development, etc.).

If the review provides that there is more than 10 years of additional gage data available or there have been significant changes in the watershed, then conduct a new gage analysis in accordance with Section 10.6.C.4.a.

In all cases, the designs of waterway structures should be based on the most appropriate hydrologic method and associated flows. This may result in the use of flows that differ from FEMA flows. Carefully analyze and document discrepancies between the results of the FEMA study and the models selected for the project design.

3. 1978 Act 167 Storm Water Management Studies. If the subject drainage basin is part of a Storm Water Management Plan pursuant to 1978 Act 167, review the flood discharges reported in the plan and incorporate into the hydrologic analysis. Verify the flood discharges reported in a stormwater management plan by an independent source or methodology if actual conditions in the basin as well as map data may have changed so that the two studies are based on different hydrologic information. Explain thoroughly the use of flood discharges for design of a waterway structure that differ significantly from the Act 167 discharges.

4. Hydrologic Methods and Models. Hydrologic methods are used to determine the various flow rates for waterway structures: design flood, overtopping flood, flow during the 100-year storm (Q_{100}) and 500-year storm (Q_{500}), flood-of-record, probable maximum flood, etc. The hydrologic methods and models included in the PennDOT standard H&H toolbox are listed below. Brief statements on the use of the methods are included, as well as information on when the methods should not be used. If a design project does not meet the criteria for using a specific listed method and the method is selected anyway, then justification must be provided for making that selection.

For methods such as the rational formula, EFH-2, TR-55, WinTR-55, and HEC-1 that require rainfall depths, the values should be obtained from the intensity-duration-frequency curves (refer to Publication 584, *PennDOT Drainage Manual*, Chapter 7, Appendix A or to Section 10.2.C). Generally, it may be assumed that rainfall of a given return period produces a flood of the same return period. See Section 10.6.E for specific guidance on selecting magnitudes of design storms.

Guidance on the use and limitations of many of the listed methods and models is found in various sections of Publication 584, *PennDOT Drainage Manual*, "Highway Hydrology, Hydraulic Design Series No. 2" (see Chapter 10, Appendix E, Reference 14), the "Model Drainage Manual" (see Chapter 10, Appendix E, Reference 2) and the "Highway Drainage Guidelines" (see Chapter 10, Appendix E, Reference 3).

a. Analysis of Stream Gage Records. If a design flow rate is being computed for a location on the same "main stem" of a stream within 0.5 to 1.5 times the gaged basin area, stream gage records shall be used to compute design or flood discharges. The hydrologic analysis for the gage should follow the recommendations of "Guidelines for Determining Flood Flow Frequency, Bulletin 17B" (see Chapter 10, Appendix E, Reference 29). The statistical analysis described in Bulletin 17B often is referred to simply as the "WRC" method. Generally, a WRC analysis of a gage record takes precedence over all other hydrologic methods. When a gage record is of short duration, or poor quality, or the results are judged to be inconsistent with field observations or sound engineering judgment, then the analysis of the gage record should be supplemented with other methods.

The validity of a gage record should be demonstrated. Gage records should contain at least 10 years of consecutive peak flow data and they should span at least one wet year and one dry year. If the runoff characteristics of a watershed are changing, from urbanization for example, then a portion of the record will not be valid. If an invalid portion of a record is used, the results will be biased.

The USGS's computer program PEAKFQ performs a standard WRC analysis. The PEAKFQ program and instructions for its use are available from the USGS. The peak flow values computed from a gage record can be transposed from one location to another with the following equation:

$$\frac{Q}{Q_g} = \left(\frac{A}{A_g}\right)^b$$

where:

Q = Peak discharge at project site

A = Basin area above project site

Q_g = WRC peak discharge at gage

A_g = Area of gaged basin

b = Drainage area characteristic coefficient from Table 3 in the SIR 2008-5102 report, *Regression Equations for Estimating Flood Flows at Selected Recurrence Intervals for Ungaged Streams in Pennsylvania,* for the basin's Flood Flow Region and recurrence interval (see Publication 584, *PennDOT Drainage Manual*, Section 7.12) (see Chapter 10, Appendix E, Reference 28).

b. Rational Method. The rational method (rational formula) is the recommended hydrologic method for drainage areas up to 80 ha (200 acres) in size. Use of the rational formula on larger drainage areas above this limit requires the use of sound engineering judgment to ensure that reasonable results are obtained. The rational method may be used with caution up to 100 ha (250 acres) with specific approval by qualified District personnel (typically the District H&H Coordinator).

The hydrologic assumptions underlying the rational formula include constant and uniform rainfall over the entire basin with a duration equal to the time of concentration (T_c). If a basin has more than one main drainage channel, if the basin is divided so that hydrologic properties are significantly different in one section versus another, if $T_c > 60$ min, or if storage is an important factor, then the rational method is not appropriate.

For typical roadway drainage problems where all of the conditions discussed in the preceding paragraph are met, the rational method should be applied.

When replacing pipes less than 750 mm (30 in) in diameter, the time of concentration (T_c) may be reduced to 5 min to compute the design discharge.

c. Regression Methods. Regional regression equations provide estimates of peak flows at ungaged sites. They are comparatively easy-to-use and they provide relatively reliable and consistent findings when applied by different hydraulic engineers. The three methods listed below (USGS SIR 08-5102, USGS WRIR 00-4189 and PSU-IV) are statistical methods that quantify general regional relationships between peak flow, or other runoff variables, and a watershed's physiographic, hydrologic and meteorological characteristics. PSU-IV is recommended only as a comparison method unless detailed site history justifies the flows developed using PSU-IV. USGS WRIR 00-4189 has been replaced by the USGS SIR 08-5102 method, but in a few specific scenarios, the USGS WRIR 00-4189 method may be considered as an acceptable method as further discussed in Section 10.6.C.4.c.(4).

The regression processes used to derive the equations in USGS SIR 08-5102, USGS WRIR 00-4189 and PSU-IV tend to smooth the effects of the independent variables on computed peak flow estimates. For basins with atypical hydrologic characteristics, this smoothing effect can be a problem. Atypical characteristics may include steep slopes in the watershed, watersheds with higher length to width ratios, etc. To ensure quality in these hydrologic estimates, it may be prudent to consider comparing the results of USGS SIR 08-5102, USGS WRIR 00-4189 or PSU-IV with the site's history of flooding as per Section 10.6.C.1 and/or the results of physically based hydrologic models such as HEC-1. By analyzing and explaining any differences in results from the various methods included in the study, the confidence in the final peak flow estimates can be improved.

(1) USGS SIR 08-5102. "Regression Equations for Estimating Flood Flows at Selected Recurrence Intervals for Ungaged Streams in Pennsylvania," Scientific Investigations Report (SIR) 08-5102 (see Publication 584, *PennDOT Drainage Manual*, Section 7.12) (see Chapter 10, Appendix E, Reference 28) is a regression analysis of streamflow data for Pennsylvania drainage basins ranging in size from approximately 259 ha (1.0 mi^2) up to approximately 5200 km^2 (2000 mi^2). USGS SIR 08-5102 was first incorporated into the USGS's National Stream Statistics (NSS) program Version 4.0.b (see Chapter 10, Appendix E, Reference 32 for a summary of StreamStats). The program includes regression equations for estimating a typical flood hydrograph for a given recurrence interval as well as other stream low flow statistics. Although the NSS computer program has been incorporated into the Environmental Modeling Research Laboratory's (EMRL) Watershed Modeling System (WMS), WMS 8.1, 8.2 and 8.3 contain NSS version 4.0, which uses the USGS WRIR 00-4189 regression equations. If using WMS version 8.3 or older, the hydrologic data must be exported from WMS to use in either a standalone NSS program Version 4.0.b or newer or use the equations from the USGS SIR 08-5102 publication.

(2) USGS WRIR 00-4189. "Techniques for Estimating Magnitude and Frequency of Peak Flows for Pennsylvania Streams", Water-Resources Investigations Report 00-4189 (see Chapter 10, Appendix E, Reference 27) is a regression analysis of streamflow data for Pennsylvania drainage basins ranging in size from approximately 390 ha (1.5 mi^2) up to approximately 5200 km^2 (2000 mi^2). USGS WRIR 00-4189 has been incorporated into the USGS's National Flood Frequency (NFF) program (see Chapter 10, Appendix E, Reference 18). The NFF program includes a National Urban Equation which adjusts the results of rural regression equations to account for urbanization. The program also includes regression equations for estimating a typical flood hydrograph for a given recurrence interval. The NFF computer program is incorporated into the Environmental Modeling Research Laboratory's (EMRL) Watershed Modeling System (WMS), versions 8.0 and earlier. Additionally, the NSS program through version 4.0 included the USGS WRIR 00-4189 equations; therefore, these equations are also in WMS versions 8.1, 8.2 and 8.3 under the NSS module as noted above. The NFF module has been replaced by the NSS module in WMS versions 8.2 and 8.3.

(3) PSU-IV. PSU-IV is a Pennsylvania regional regression method that is based on the Log Pearson III equation. PSU-IV was published in 1981 and includes regression equations that were developed with stream gage data through 1977. The PSU-IV regression equations were developed for basins from 390 ha (1.5 mi^2) to 390 km^2 (150 mi^2). Since USGS WRIR 00-4189 is based on data through 1997 and USGS SIR 08-5102 is based on data through 2006, PSU-IV is considered only as a comparison method. PSU-IV can be used to compare estimates from other methods but should not be used as the final hydrologic method for flow selection unless there is site flooding history that justifies its use.

The use of PSU-IV analyses as a comparison method in urban areas should be based on sound engineering judgment.

FEMA no longer accepts PSU-IV as a regression method for NFIP studies (design of flood control structures and/or the regulation of floodplain lands).

(4) Summary of Regression Performance. The two most recent USGS methods (USGS WRIR 00-4189 and USGS SIR 08-5102) were evaluated by PennDOT. In general the USGS SIR 08-5102 method will be the most applicable regression method, but there are some areas of the state that one of the older regression methods may be considered. When compared to observed values (i.e., stream gage analyses), severe under- and over-predictions occur using both USGS methods, and there is no real physiographic or basin characteristic pattern to the results. The USGS regression flows for watersheds with smaller drainage areas (< 13 km^2 (< 5 mi^2)) also have inconsistent results. The watersheds where USGS SIR 08-5102 highly over- or under-predicted the gage value are listed in Publication 584, *PennDOT Drainage Manual*, Chapter 7, Table 7.4. Maps showing the locations of these watersheds are located in Publication 584, *PennDOT Drainage Manual*, Chapter 7, Figures 7.2 and 7.3. The observed values were calculated using a Log Pearson III analysis with a weighted skew coefficient, while the weighted values were calculated to minimize period of record bias by computing a predicted flood frequency discharge weighted average of the observed, as well as the

USGS SIR 08-5102 computed, using the period of record of the station and the equivalent period of record for the regression equation (see Publication 584, *PennDOT Drainage Manual*, Section 7.12) (see Chapter 10, Appendix E, Reference 28).

The following procedure is recommended to determine the most appropriate design flows if regression methods are applicable.

(5) Recommended Methodology for use of Regression Equations. The USGS SIR 08-5102 regression equations generally perform adequately in predicting flows; however, there are instances where flows may be unrepresentatively high or low in comparison to what one would expect from a stream gage analysis. Therefore, the following set of guidelines should be followed when watershed characteristics are within the limitations of the USGS SIR 08-5102 regression equations.

(a) Determine the watershed in which the site is located.

(b) Determine if the site may be substantially affected by upstream regulation, using USGS SIR 08-5102, Appendix 3 as a guide.

(c) Determine if the site is in a watershed where USGS SIR 08-5102 may significantly over or under-predict the design event calculated from gage data by referring to Publication 584, *PennDOT Drainage Manual*, Chapter 7, Table 7.4 and Publication 584, *PennDOT Drainage Manual*, Chapter 7, Figures 7.2 and 7.3.

(d) Perform calculations using the USGS SIR 08-5102 method to estimate flows. Evaluate the predicted flows in the hydraulic model and compare to local flood history and engineering judgment.

(e) When the project site is located in one of the two precaution areas mentioned below and the results from USGS SIR 08-5102 are not consistent with the local flood history, it may be necessary to consider other hydrologic methods including the USGS WRIR 00-4189 method or regional gage comparison. Note for the gages/watersheds listed in Publication 584, *PennDOT Drainage Manual*, Chapter 7, Table 7.4 and Publication 584, *PennDOT Drainage Manual*, Chapter 7, Figures 7.2 and 7.3, consideration should also be given to the number of years of record and quality of data at the gaging station for which the regression flows are being compared.

(6) Precautions. Precautions for use of the USGS SIR 08-5102 method as a result of PennDOT's evaluation include:

(a) USGS SIR 08-5102 results in the watersheds identified in Publication 584, *PennDOT Drainage Manual*, Chapter 7, Table 7.4 and Publication 584, *PennDOT Drainage Manual*, Chapter 7, Figures 7.2 and 7.3 were particularly different from the gage data and should be closely evaluated for applicability. Some of these watersheds have shown to severely under-predict flows as compared to gage data within the watershed.

(b) Sites with drainage areas less than < 13 km^2 (< 5 mi^2) for both the USGS WRIR 00-4189 and USGS SIR 08-5102 methods.

d. HEC-1. HEC-1 is a generalized hydrologic simulation model that can be used with basins of almost any size and complexity. Use of the EMS-I's Watershed Modeling System (WMS) as an interface to HEC-1 is recommended since it systematizes the computation of the physiographic and hydrologic parameters required by HEC-1. When WMS is used for its graphical user interface to HEC-1, a practical upper limit in the vicinity of 300 km^2 to 400 km^2 (100 mi^2 to 150 mi^2) is recommended. HEC-1 assumes that the rainfall is spatially uniform over each sub-basin modeled.

Precipitation input in the form of a 24-hour rainfall time distribution should be applied with this method. Rainfall distribution based on the PDT-IDF data is preferred; however, the SCS Type II and Type III (Philadelphia region only) rainfall distributions may also be used. It should be noted that modeling Type

II events will generally yield higher peak flows compared to the PDT-IDF data. The SCS loss method, SCS dimensionless unit hydrograph, and the SCS lag equation are most commonly used; however, careful consideration must be given to the assumptions and limitations underlying these methods.

The SCS has published a suggested upper limit on basin size for the SCS lag equation of 800 ha (2000 acres, 3.1 mi^2) (NEH-4, Chapter 15). The upper limit on basin area for the SCS Loss Method (i.e., Runoff Curve Number) is not well established; however, a limit of 52 km^2 (20 mi^2) has been suggested. These limitations may be overcome by subdivision of the watershed and appropriate routing. These are suggested limits and larger subbasins may be appropriate depending on the uniformity of the characteristics (e.g., land use type, basin slope) within each watershed subbasin.

WMS uses USGS Digital Elevation Models (DEMs) to compute basin geometric parameters. Relatively large data sets are required for, and produced by, WMS for basins spanning more than eight or ten DEMs. The use of HEC-1 by itself may be prudent in these cases.

When using WMS in urban areas, care must be taken to ensure that stormwater management facilities are incorporated correctly into the model. This will require additional careful modeling and routing.

e. HEC-HMS. The Hydrologic Modeling System (HEC-HMS) is designed to simulate the precipitation-runoff process of a watershed. It is applicable for basins of almost any size and complexity in a wide range of geographic areas, including large river basin water supply and flood hydrology, and small urban or natural watershed runoff. It is designed to replace HEC-1, and has similar options to HEC-1, but incorporates some advances in hydrologic engineering for precipitation input and soil moisture methods.

HEC-HMS is not fully integrated within the WMS software interface and must be run in the HMS software program. WMS 7.1 and later versions provide tools for setting up, computing data for, and entering data for HMS models. These models can then be saved to HMS format and the model can be run in HMS. The results from these models can then be read into and viewed in WMS.

f. TR-55. "Urban Hydrology for Small Watersheds", Technical Release 55 (TR-55), Soil Conservation Service (SCS), June 1986, provides a graphical method for computing peak discharges of drainage basins with areas ranging from 4.0 ha (10 acres) up to 800 ha (2000 acres, 3.1 mi^2).

TR-55 is a segmental method (i.e., flow time is computed by adding the times for the overland, shallow concentrated, and channel segments). TR-55 considers hydrologic parameters such as slope, roughness, losses, rainfall, soil type, land use, and time. Although TR-55 has fewer assumptions than the rational formula, it also assumes that rainfall is uniform over the entire basin. Some hydrologists have stated that TR-55 tends to produce conservatively high estimates of peak flows. TR-55 should be used with caution when structure sizing is highly sensitive to the computed peak flow values.

This method must meet the following conditions:

(1) Basin drained by a single main channel or by multiple channels with times of concentration (T_c) within 10% of each other.

(2) T_c between 0.1 and 10 hours.

(3) Storage in the drainage area is ≤ 5% and does not affect the time of concentration.

(4) Watershed can be accurately represented by a single composite curve number.

The "Graphical Method" module in the SCS's TR-55 computer program and the TR-55 module in WMS are equivalent to the manual graphical method described in the TR-55 report. TR-55 includes a procedure for computing a "rough" synthetic hydrograph, which can be used to size small ponds.

Refer to the TR-55 report for a complete discussion of limitations and assumptions of this methodology.

g. WinTR-55. WinTR-55 was released by the Natural Resources Conservation Service in January, 2005. WinTR-55 is simply a Windows-based version of the original DOS-based TR-55. TR-55 was developed to simplify TR-20, which at the time was considered computationally demanding. Assumptions were made and tables and hydrographs were interpolated to approximate results from TR-20, resulting in the TR-55 methodology. With present day technology, the TR-20 is no longer a drain on computational resources. WinTR-55 uses TR-20 as the computational engine to develop hydrographs and determine peak flows. Win TR-55 differs from WinTR-20 (Windows-based version of TR-20) in that WinTR-55 assumes a less complex watershed and simplifies the input process.

This method must meet the following conditions:

(1) Drainage area between 1 acre and 25 square miles.

(2) T_c for any subbasin between 0.1 and 10 hours.

(3) Muskingum-Cunge reach routing method applies for subdivided watersheds.

The SCS has published a suggested upper limit on basin size for the SCS lag equation of 800 ha (2000 acres, 3.1 mi^2) (NEH-4, Chapter 15). The upper limit on basin area for the SCS Loss Method (i.e., Runoff Curve Number) is not well established; however, a limit of 52 km^2 (20 mi^2) has been suggested. These limitations may be overcome by subdivision of the watershed and appropriate routing. These are suggested limits and larger subbasins may be appropriate depending on the uniformity of the characteristics (e.g., land use type, basin slope) within each watershed subbasin. Refer to the WinTR-55 User's Manual for a complete discussion of limitations and assumptions of this methodology.

Precipitation input in the form of a 24-hour rainfall time distribution should be applied with this method. Rainfall distribution based on the PDT-IDF data is preferred; however, the SCS Type II and Type III (Philadelphia region only) rainfall distributions may also be used. It should be noted that modeling Type II events will generally yield higher peak flows compared to the PDT-IDF data. The SCS loss method, SCS dimensionless unit hydrograph, and the SCS lag equation are most commonly used; however, careful consideration must be given to the assumptions and limitations underlying these methods.

h. EFH2. EFH2 determines peak discharge by procedures contained in SCS's *Engineering Field Handbook*, Chapter 2 (see Chapter 10, Appendix E, Reference 21). This method is applicable to a rural watershed between 0.4 ha (1 acre) and 810 ha (2000 acres), and must meet the following conditions:

(1) Hydraulic length is between 60 m (200 ft) and 7900 m (26,000 ft).

(2) Average slope is between 0.5 and 64 percent.

(3) Valley or reservoir routing is not required.

(4) Watershed can be represented accurately by a single composite curve number between 40 and 98.

(5) Urban land uses comprise no more than 10% of the basin.

Refer to the Engineering Field Handbook, Chapter 2 for a complete discussion of the methodology and its limitations.

Rainfall is based upon precipitation frequency estimates from the intensity-duration-frequency curves (refer to Publication 584, *PennDOT Drainage Manual*), as discussed in the section above for TR-55.

5. Hydraulic Models. Hydraulic models are used to evaluate the effect of proposed highway structures on water surface profiles, flow and velocity distributions, lateral and vertical stability of channels, stream regimes, flood risk, and the potential reaction of the streams to changes in variables such as structure type, shape, location, and scour control measures. Listed below are the hydraulic models included among the PennDOT standard H&H design models. Associated with each model is a brief statement that describes when the model

should or should not be used. If a design project does not meet the criteria for selecting a particular model, then justification must be provided if that model is used.

For hydraulic analyses that are likely to involve revisions to FEMA's Flood Insurance Rate Maps, selection of the hydraulic model should be coordinated carefully with FEMA. Additional information on FEMA's policy regarding most hydraulic models can be found in a memorandum authored by FEMA's Michael K. Buckley, P.E. dated April 30, 2001 and entitled, *Policy for Use of HEC-RAS in the NFIP* (see Chapter 10, Appendix F).

a. HEC-RAS. HEC-RAS is the recommended model for performing hydraulic analysis of steady, gradually varied (over distance), one-dimensional, open channel flow. HEC-RAS includes a culvert module that is consistent with HDS-5 and HY-8. The bridge hydraulics algorithms now include the WSPRO models. HEC-RAS applies conservation of momentum, as well as energy and mass, in its hydraulic analysis. HEC-RAS includes all the features inherent to HEC-2 and WSPRO plus several friction slope methods, mixed flow regime support, automatic "n" value calibration, ice cover, quasi 2-D velocity distribution, superelevation around bends, bank erosion, riprap design, stable channel design, sediment transport calculations, and scour at bridges. HEC-RAS and HEC-2 do not produce identical results. For detailed information on a comparison of HEC-RAS to HEC-2, refer to Appendix C of the "HEC-RAS River Analysis System, Hydraulic Reference Manual" (see Chapter 10, Appendix E, Reference 17).

The bridge scour routines in the hydraulic design module of HEC-RAS should not be used for bridge scour computations or to compute scour depths. Use caution when using HEC-RAS output parameters other than velocities in scour computations. For additional design guidance about scour, refer to Publication 15M, Design Manual, Part 4, *Structures,* Volume 1, Part A, Chapter 7.

b. HY-8. HY-8 is an interactive computer program for highway culvert analysis and includes routines for analysis and design of culverts with improved inlets and stand-alone energy dissipators. HY-8 can perform computations associated with tailwater elevations, road overtopping, hydrographs, simple flood routing, and multiple independent barrels. HY-8's most convenient features are its well-designed reports and plots, especially the culvert performance curves and the tailwater rating curves.

HY-8 is the preferred hydraulic model for analyzing isolated culverts; however, if ponding is not significant, or if upstream velocity head needs to be considered (i.e., if stream velocity is greater than 1.5 m/s (5 ft/s)), then HEC-RAS should be used.

c. HDS-5 and/or HDHC CD-ROM. "Hydraulic Design of Highway Culverts, Hydraulic Design Series No. 5" (see Chapter 10, Appendix E, Reference 24) contains an extensive series of well-designed, easy-to-use, nomographs for design of highway culverts. The HDHC CD-ROM is an electronic version of the HDS-5 manual.

For ordinary culvert hydraulics, HDS-5 and HY-8 provide equivalent solutions.

d. HEC-2. HEC-2 Version 4.6.2 is an approved water surface profile program; however, use of the more graphical HEC-RAS program is recommended. One of HEC-2's technical limitations is the normal bridge routines and standard-step backwater computations use energy conservation only. Conservation of momentum is used <u>only</u> in the special bridge routines when there are bridge piers (see Section 1.4 of HEC-2 Users' Manual).

e. WSPRO. The WSPRO computer program was developed by the USGS and is comparable to HEC-2, except for the fact that WSPRO had special subroutines for analysis of water surface profiles at bridge locations. All of these WSPRO subroutines have been incorporated into HEC-RAS.

WSPRO should not be used except for highway projects that cause revisions to FEMA Flood Insurance Rate Maps (FIRMs) based on WSPRO. Coordination with FEMA may allow the use of HEC-RAS in place of WSPRO.

In cases where a map revision is necessary, HEC-RAS should be considered for the engineering analyses during the project design phases and WSPRO should be used only for producing the application for a letter of map revision.

D. Other Models. Many hydrologic and hydraulic models exist other than those that are listed in Section 10.6.C. Although some models perform one type of computation better than other available models, it is necessary for PennDOT to concentrate its efforts on the programs in PennDOT's H&H toolbox in order to develop and maintain agency-wide expertise. If a model not included in the forgoing list is used for a specific problem, then the project engineer should ensure that model is appropriate and that approvals are obtained from the Department.

Examples of acceptable two-dimensional hydraulic modeling programs are the FESWMS (Finite Element Surface-Water Modeling System) and TUFLOW; both programs interface with Aquaveo's SMS (Surface-water Modeling System) software. The FESWMS program receives funding from FHWA and was developed by Dr. Dave Froehlich, P.E. FESWMS is a 2-D finite element model. The TUFLOW model was developed by BMT WBM Pty Ltd in Australia. TUFLOW offers a one-dimensional (1-D) and two-dimensional flood and tide simulation software. TUFLOW is a finite difference model that can handle a wide range of hydraulic situations, including mixed flow regimes, weir flow, bridge decks, box culverts, and robust wetting and drying. 2-D models are useful in situations of flows with significant horizontal velocity components other than in the downstream direction (i.e. 2-D flow patterns) as well as situations with time-variant flow patterns such as those in tidal environments. Examples below include common situations encountered by PennDOT where a two-dimensional model may be needed; however, this list is not all inclusive (for further information, refer to Chapter 10, Appendix E, Reference 33):

- When the stream slope is very flat and bridge piers cause localized effects on water surface elevations (WSE). 1-D models will average these localized increases in WSE across the entire cross section and apply the calculated WSE increase across the entire floodplain width, which is not realistic. The 1-D model may also overestimate the magnitude and upstream extent of the pier-induced WSE increase.

- When the hydraulics at the project site are affected by a confluence that changes location for different flood events and causes 2-D characteristics in the floodplain.

- When flow is split between multiple structures cross a wide floodplain.

- When a structure is on a severe channel bend (making the velocity vary between the inside and outside of the bend) and scour is a major concern.

- When a project is anticipated to cause WSE increases in a highly-developed area and flooding impacts need to be more accurately defined.

Models for the analysis of pavement drainage, analysis of storm sewer networks, and analysis of runoff water quality are not listed since they are not included in the H&H toolbox. If a highway design project requires one of these models, the engineer should ensure that appropriate coordination occurs within PennDOT and any outside agencies with review responsibilities or regulatory authority.

E. Design Storms. Inundation of the travelway dictates the level of traffic service provided by a highway facility. The travelway overtopping flood level identifies the upper limit of serviceability, and it provides one of the important definitions of the term "design flood". The minimum magnitude of design floods for all drainage structure design projects shall be selected from Table 10.6.1.

INTENTIONALLY BLANK

TABLE 10.6.1
DESIGN FLOOD SELECTION GUIDELINES

FUNCTIONAL CLASSIFICATION	MAXIMUM EXCEEDANCE PROBABILITY (%)	MINIMUM RETURN PERIOD (YEARS)
Interstate and Limited Access Highways	2	50
Principal Arterial System	2	50
Minor Arterial System	4	25
Rural Collector System, Major	4	25
Other Collector Systems	10	10
Local Road and Street Systems	10	10

Note: Federal Policy states that the design flood for encroachments by through lanes of Interstate highways shall not be less than the flood with a 2 percent chance of being exceeded in any given year. Interstate highways should be designed to accommodate the 2% (50-year) flood event.

1. Use of a return period smaller than listed in Table 10.6.1 must be justified in the hydraulic analysis for the project and kept with the project's files. Such justification must be based on the following kinds of factors:

a. Comparison to adjacent roadway sections,

b. Considerations involving existing site conditions,

c. Considerations involving right-of-way limitations and constraints imposed by adjacent land use or development, and

d. Limitations based on the project's scope.

2. For the purposes of this document, the design flood is assumed to result from the storm with the same return period; therefore, the terms "design flood" and "design storm" have the same meaning herein.

3. For most highway design projects, it often is important to extend the hydrologic and hydraulic analysis to include consideration of floods of magnitudes other than the design floods listed in the above table. These additional floods are referred to collectively as "check floods" and they may include the following kinds of floods:

a. The regulatory environmental design flood as specified in 25 PA Code §105.161(c), §105.191, §105.201 and elsewhere.

b. Storms and floods which may be required according to Stormwater Management Plans adopted according to 1978 Act 167 (the Stormwater Management Act).

c. The 100-year flood for evaluation of impacts on FEMA's floodplain mapping.

d. The overtopping flood, or greatest flood which must be passed, as discussed in 23 CFR 650, § 650.115 and § 650.117; and the overtopping flood discussed in Publication 15M, Design Manual, Part 4, *Structures,* PP Chapter 7.

e. The specific superflood discussed in Publication 15M, Design Manual, Part 4, *Structures,* PP Section 7.2.3 for evaluation of the potential effects of scour and evaluation of foundation stability.

f. The Probable Maximum Precipitation, Probable Maximum Storm or the Probable Maximum Flood for projects involving a high risk factor resulting from such considerations as the volume of impounded water.

F. Adjustments to Peak Flow Estimates. Adjustments to peak flow estimates may be prudent when a waterway encroachment is associated with a potential for loss of property, increased hazards to life or safety, or public inconveniences. These adjustments can be applied by increasing the return interval (probability) of the design storm and then computing the corresponding design peak discharge, or by applying a multiplier to increase the estimated design discharge to a value outside a given confidence interval as discussed in Chapter 9 of the PSU-IV Manual (see Chapter 10, Appendix E, Reference 4).

A parametric sensitivity analysis also can be used to help evaluate the quality of a peak flow estimate. For example: precipitation amount, curve number, and time-of-concentration can be varied by small amounts and the peak flow can be recomputed. From these recomputed estimates of peak flow, the sensitivity of peak flow to potential future changes in the values of the parameters, or to errors in the estimates of the parameters, can be evaluated.

10.7 GUIDELINES FOR PREPARATION OF HYDROLOGIC AND HYDRAULIC REPORT

A. Overview. There are two options for preparing a Hydrologic and Hydraulic (H&H) Report. The applicability of the report option is based on the complexity of the project, the nature of the stream and floodplain, the cost of the structure and other pertinent factors. The two options and their applicability are outlined below:

- **Abbreviated H&H Report as outlined in Section 10.7.B** may be used for structure rehabilitation and replacement projects that have:
  - no significant reduction in the existing waterway opening
  - no significant changes to grades of approach roadways
  - no significant changes to overtopping characteristics
  - no significant change of alignment
  - total widening of the structure is 7.2 m (24 ft) or less

- **Full H&H Report as outlined in Section 10.7.C** is required for all new alignment projects, structure rehabilitation and replacement projects that do not meet the requirements of an abbreviated H&H Report, or projects that meet one of the following:
  - significant change to the grades of the approach roadways
  - structures equal to or greater than 30 m (100 ft) in length (classified as a stream enclosure per PA DEP regulations)
  - structures located in densely developed areas where the potential for flooding impacts would be significant

Hydrologic and Hydraulic QA/QC Checklists are required for H&H Report submissions. For local projects, the decision on whether the QA/QC Checklists are required is decided by the District. The checklists target the primary technical H&H components, as required for typical PennDOT bridge and culvert replacement projects. More specifically the checklists comprise:

- Hydrology per acceptable methods in Section 10.7.C and Publication 584, *PennDOT Drainage Manual,* Chapter 7
- HEC-RAS computer model reviews for bridges and culverts
- HY-8 computer model reviews for simple culvert replacements
- Scour per Publication 15M, Design Manual, Part 4, *Structures*, Chapter 7 and HEC-18
- H&H Report per Section 10.7.C
- Abbreviated H&H Report per Section 10.7.B

The H&H Checklists are in Excel spreadsheet format. The Checklists are located in Chapter 10, Appendix D and the Excel files for the blank Checklists can be found on the PennDOT H&H webpage at the following address.

www.dot.state.pa.us/Internet/Bureaus/pdDesign.nsf/H&HHomepage?OpenFrameset

The instructions on the first sheet of the checklist provide guidance on the use of the checklists. Depending on the project type, not all checklists will be required for an H&H Report submission. **The applicable completed checklists will be required as an attachment to the H&H Report before submission to PennDOT for review**. If

a paper copy of the H&H Report is submitted for review, the checklists should be attached to the transmittal letter. If an electronic copy of the report is submitted for review through the JPA_2 Expert System, the completed checklists should be uploaded to the "PennDOT Files" section of the JPA_2 Expert System. This is an internal check that is not part of the permit application to PA DEP and information stored in the "PennDOT Files" section of JPA_2 Expert is not transferred to PA DEP when the permit is submitted. Note that the Scour checklist will be a mandatory requirement for open-bottom structures; the Scour checklist is to be included with the scour computations, whether they are located in the Foundations Report or the H&H Report.

For all H&H reports the H&H Electronic Files should be attached to the report as applicable.

H&H reports shall be prepared by a registered Professional Engineer and shall be affixed with their seal and certification which shall read as follows: "I (name) do hereby certify pursuant to the penalties of 18 Pa. C.S.A. Section 4904 to the best of my knowledge, information and belief, that the information contained in the accompanying plans, specifications, and reports has been prepared in accordance with accepted engineering practice, is true and correct, and is in conformance with Chapter 105 of the rules and regulations of the Department of Environmental Protection."

Additional information and guidance concerning the design and permitting of temporary structures is located in Section 10.7.D.1.b.

B. Abbreviated H&H Report Outline. The abbreviated H&H Report outline may be used for structure rehabilitation and replacement projects that meet the requirements outlined in Section 10.7.A.

1. Site Data.

a. Location map on USGS quadrangle.

b. PA DEP and PA Fish and Boat stream classifications. Note that if the stream is classified as High Quality (HQ) or Exceptional Value (EV) designated use per 25 PA Code Chapter 93, an antidegradation analysis may be required. See Chapter 13, Section 13.7 for additional information.

c. Stream bed material description.

d. Color photographs of the existing structure and upstream and downstream channel.

e. Site inspection records indicating the dates and other information relative to the site inspection made by the Engineer conducting the hydrologic and hydraulic analysis.

2. Hydrologic Analysis.

a. Determine the drainage area above the proposed crossing from USGS maps or other appropriate sources.

b. Determine flood discharge(s) using an acceptable hydrologic method per Section 10.6.C.4 for the design flood and flood frequencies per Section 10.6.E.

3. Hydraulic Analysis.

a. Hydraulic Modeling Requirements: Refer to Chapter 10, Appendix C for the Hydraulic Modeling Requirements for H&H Reports.

b. Bridges.

(1) Model existing versus proposed conditions using HEC-RAS. Provide velocities and backwater elevations for all cross sections in the hydraulic model.

(2) Perform scour analysis and size riprap protection per Publication 15M, Design Manual, Part 4, *Structures,* Volume 1, Part A, Chapter 7.

(3) Provide comments and/or computations on temporary stream crossings, stream diversion, cofferdams, etc. and the need for erosion control devices.

c. Culverts.

(1) Model existing versus proposed conditions using HEC-RAS, HY-8, or "Hydraulic Design of Highway Culverts, Hydraulic Design Series No. 5" for culverts with or without improved inlets (see Chapter 10, Appendix E, References 17, 13, or 24).

(2) Provide comments and/or computations on temporary stream crossings, stream diversion, cofferdams, etc. and the need for erosion control devices.

4. Risk Assessment. If an alternatives analysis was completed, provide a brief narrative in the H&H Report as to why the final alternative was selected. A risk assessment should consider capital costs and risks, and other economic, engineering, social and environmental concerns. The abbreviated H&H Report may simply *summarize* a separate risk assessment located in the environmental document or project file.

5. Summary Data Sheet. The summary data sheet presented in Figure 10.7.1 shall be included with all H&H reports. See instructions in Section 10.7.C.5. Note: the Excel file for the blank Summary Data Sheet can be found on the PennDOT H&H webpage at the following address:

www.dot.state.pa.us/Internet/Bureaus/pdDesign.nsf/H&HHomepage?OpenFrameset

6. Drawings.

a. Roadway or structure plans indicating the following information:

(1) Layout of existing and/or proposed structures, stream channels and wetlands. The plan should include contours and other relevant topographic features.

(2) Flood limits of the existing and/or proposed structures and/or channels (can be shown on a topographic plan or cross sections from HEC-RAS).

(3) Temporary stream crossing, access road, cofferdam, diversion facility, etc. if applicable (can be copied from E&S plan).

(4) The magnitude, frequency and pertinent water surface elevation for the PennDOT design flood and the 100-year flood.

(5) If a backwater analysis is conducted, provide a plan drawing showing the location and orientation of all cross sections used for backwater analysis. The drawing shall be to scale and show contouring and all important hydraulic features. The limits of the hydraulic model must extend a minimum of 150 m (500 ft) upstream and 150 m (500 ft) downstream from the existing and proposed crossings. See the HEC-RAS Hydraulic Reference Manual for specific cross section location recommendations and requirements for bounding structure sections.

Items 6.b and 6.c below do not require separate drawings provided that the information is available in the HEC-RAS model submitted with the report.

b. Profile of stream for the limits of the study.

c. Cross section output of all cross sections used for backwater analysis.

7. H&H Electronic Files. Attach the electronic files for the hydrologic and hydraulic models as applicable.

C. Full H&H Report Outline. The full H&H Report outline should be used for projects as detailed in Section 10.7.A.

1. Site Data.

a. Location Map.

(1) The purpose is to show the proposed highway alignment, watershed boundary and reach of the river.

(2) Type:

(i) USGS quadrangle sheet or map of equal detail.
(ii) Aerial photographs.

b. Existing Structures (including relief or overflow structures):

(1) Locate (by map) existing structures including those upstream and downstream from the proposed crossing.

(2) Describe each structure fully, giving:

(i) Type of structure, including span lengths and pier orientation.

(ii) Cross section beneath structure, noting stream clearance to superstructure and skew with direction of current during extreme floods.

(iii) All available flood history, high water marks with dates of occurrence, nature of flooding (including overtopping of approach fills), damages and source of information.

(3) Compare stream and existing structure locations with the proposed crossing.

(4) Indicate whether existing structures are to remain in place.

c. Locate and determine elevations of all available high water marks along the stream giving dates of occurrence. Describe or list critical flood elevations of interest in evaluating possible damage (indicate datum used). Provide details of gage records and precipitation records.

d. Comment on fish habitats and other environmental concerns and on whether the stream flow is continuous or intermittent. Note that if the stream is classified as High Quality (HQ) or Exceptional Value (EV) designated use per 25 PA Code Chapter 93, an antidegradation analysis may be required. See Chapter 13, Section 13.7 for additional information.

e. Comment on drift, ice, nature of stream bed and bank stability.

f. Color photographs showing existing structures (including nearest upstream and downstream structures), past floods, main channel and floodplain with enough detail to coordinate the hydraulic model. Include a photo location map that shows the location and orientation of each photograph.

g. List factors affecting water stages:

(1) High water from other streams.
(2) Reservoirs (existing or proposed) and approximate date of construction.
(3) Flood control projects (give status, e.g., control structures, operator, and operating policy).
(4) Other controls.

h. Indicate if debris can be a problem at the structure site (include pertinent facts to justify the statement).

i. Site inspection records indicating the dates and other information relative to the site inspection made by the Engineer conducting the hydrologic and hydraulic analysis. Obtain information from PennDOT maintenance, mail carriers, municipal officials, school bus drivers, or local residents including dates, names and other information regarding discussions.

j. Indicate date of Line and Grade approval.

2. Hydrologic Analysis.

a. Determine the drainage area above the proposed crossing from USGS maps or other appropriate sources.

b. List flood records available on the river being studied.

c. Determine design flood discharge(s) and the discharge(s) as per Section 10.6.C.4 of other frequencies per Section 10.6.E.

d. Plot flood-frequency curve for the site (refer to prepared flood frequency analysis for stream under study if available). Use probability paper or probability scale.

e. Plot a stage-discharge-frequency curve for the site (with and without the proposed construction).

f. Published FEMA flows and the method used to determine them should be compared with the peak flows calculated with current PennDOT-acceptable methods.

3. Hydraulic Analysis.

a. Hydraulic Modeling Requirements: Refer to Chapter 10, Appendix C for the Hydraulic Modeling Requirements for H&H Reports. HEC-RAS electronic files must be submitted with the H&H Report; refer to the HEC-RAS Checklist in Chapter 10, Appendix D for the HEC-RAS files required to perform a technical review.

b. Bridges.

(1) Determine allowable velocity and permissible backwater.

(2) Compute and plot flow-distribution charts indicating distribution of flow across the valley at the proposed bridge site.

(3) Compute backwater for various trial bridge configurations for various discharges according to Section 10.6.

(4) Compute mean velocities through trial bridge lengths for various discharges.

(5) Estimate scour depth for proposed bridge piers and abutments (refer to Publication 15M, Design Manual, Part 4, *Structures,* Volume 1, Part A, Chapter 7).

(6) Make economic assessment (evaluate costs of bridge versus probable flood damage for various bridge lengths).

(7) Determine and indicate the recommended bridge opening based on the allowable velocity, permissible backwater with due considerations given to economic, safety and environmental factors.

(8) Include comments and/or computations on:

(i) Types and alignment of piers.

(ii) Stream stability (HEC-20).

(iii) Need for stream instability countermeasures (HEC-23).

(iv) Channel changes (HDS-6, HEC-11, and HEC-15).

(v) Bank protection, riprap or other erosion control provisions (HEC-11). For requirements to calculate scour, refer to Publication 15M, Design Manual, Part 4, *Structures,* Volume 1, Part A, Chapter 7.

(vi) Temporary stream crossings, access roads and cofferdams.

c. Culverts.

(1) Determine allowable headwater (AHW) depth per the HW/D ratios in Section 10.3.C. If the proposed culvert is replacing a bridge and is not hydraulically acting like a culvert, (i.e., under embankment fill that would cause ponding at the culvert inlet) the AHW design criteria do not apply.

(2) Determine type(s) of culvert in accordance with the Department's current structural criteria or policies. For long or steep culverts, investigate the benefits of using side tapered improved inlets. For a box culvert, the structure shall be countersunk with baffles per Section 10.11. Refer to Publication 584, *PennDOT Drainage Manual*, Chapter 9, Appendix A for "Joint Program Guidance for the Analysis of Environmental Impacts and Other Issues for Short Span Structures."

(3) Determine size(s) of culvert for various discharges in accordance with the allowable headwater (AHW) depth with due considerations given to economic, safety, damage and environmental factors, using the method of hydraulic analysis as set forth in the following:

(i) Use HEC-RAS, HY-8, or "Hydraulic Design of Highway Culverts, Hydraulic Design Series No. 5" for culverts with or without improved inlets (see Chapter 10, Appendix E, References 17, 13, or 24).

(ii) For culverts with energy dissipators, use HEC-14 and HY-8.

(iii) Use HDS-6, HEC-11, HEC-15, HEC-20, and HEC-23, as appropriate.

(iv) Other proven hydraulic principles may be used only if cases are not covered in the above references.

(4) Provide economic analysis (evaluate costs of culvert versus probable flood damages for various culvert sizes).

(5) Provide comments and/or computations on temporary stream crossings, stream diversion facilities and the need for erosion control devices.

d. Channel Changes.

(1) Determine the permissible flood limits.

(2) Compute water surface profiles for the existing streams and alternate designs of the new channels.

(3) Evaluate the comparative effects of the existing and new channels.

(4) Provide economic analysis (evaluate costs of channel versus probable flood damage).

(5) Determine the location and size of the recommended channel with due consideration given to environmental concerns and similarity to the existing stream.

(6) Describe bank and channel protection. Discuss freeboard; horizontal and vertical limits of protection; design criteria; and design procedure.

(7) Provide comments and/or computations for temporary stream crossings.

(8) If the channel change involves a fishable stream, provide comments and/or computations for the required items as indicated in "Channel Construction Involving Fishable Streams" in Section 10.10.

e. Embankment Encroachments Paralleling Floodplains.

(1) Evaluate the effect of encroachment on water stages. Compute water surface profile for waterway.
(2) Tabulate changes in stream velocities.
(3) Evaluate scour and erosion of roadway embankment and stream channel.
(4) Make flood damage analysis to estimate and evaluate the probable flood damage.
(5) Describe bank channel protection needed for flow, wave action, and superelevation.

4. Risk Assessment or Analysis.

a. A risk assessment or analysis using the base flood (100-year flood), with consideration given to capital costs and risks, and to other economic, engineering, social and environmental concerns, shall be included for the applicable design alternative(s) of any waterway structure. Refer to 23 CFR 650 Subpart A, Section 650.105 for an explanation and definition of "risk analysis." Generally, the risk analysis involves monetary figures in the calculation of the risk and other factors, whereas the risk assessment only involves narrative description of the relevant factors.

b. Risk analysis shall be performed and included for the following types of waterway structures:

(1) Encroachments at sensitive urban areas associated with new locations.

(2) Any encroachment determined to be a "significant encroachment" as defined in 23 CFR 650 Subpart A, Section 650.105.

The risk analysis, based on the least total expected cost (LTEC) design process, shall be performed in accordance with the procedure as specified in FHWA's Hydraulic Engineering Circular No. 17, "The Design of Encroachments on Floodplains Using Risk Analysis".

c. Risk assessment shall be performed and included for all other waterway structures not specified in items 2(a) and 2(b) above. Where appropriate, the simplified economic assessment as referred to in this section shall be included and considered in the risk assessment.

d. Risk assessment or analysis shall include the hydraulic data for the overtopping flood if this information is an important factor in the selection of the roadway grade and the type and size of waterway structures. Where the overtopping is to occur for floods of a lesser frequency than the 100-year flood, there should be a discussion of the consequences of overtopping to the highway and highway users including the traffic ADT. As defined in 23 CFR 650 Subpart A, Section 650.105, the term "overtopping flood" means the flood described by the probability of exceedance and water surface elevation at which flow occurs over the highway, over the watershed divide or through structure(s) provided for emergency relief.

e. For encroachments which are associated with new highway locations or which are related to highway replacement projects where existing waterway openings will be reduced, the risk assessment or analysis should be expanded, as appropriate, to include discussion of the following environmentally related matters with respect to the impacts of the proposed encroachments due to occurrence of a 100-year flood, the design floods as discussed in Section 10.6.E, as well as more frequent floods (such as average annual flood, 1.5-, 2-, 5-, 10-, 25-, and 50-year floods):

(1) Potential for changes to the ecology or the aquatic habitat of the stream channel and floodplains.

(2) Changes in flow regime due to the ponding upstream of the highway structure and whether or not this ponding can result in a change in the erosion and deposition balance of the stream channel.

(3) Increased frequency of inundation which may destroy bank denning animals and nesting fowl in the upstream ponding areas and which may reduce wetland areas downstream as a result of flood peak attenuation.

(4) Consideration of the local community or development potential of the area with respect to public safety or the creation of a public nuisance as a result of the ponded water.

It is anticipated that the environmental concerns of the above items are normally nonexistent or below the threshold of measurement for highway projects. However, this information should be included for each specific applicable project to provide regulatory agencies a basis for issuing the permits.

f. The detail of risk assessment or analysis shall be commensurate with the risk associated with the encroachment and with other economic, engineering, social or environmental concerns.

5. Summary Data Sheet. The summary data sheet presented in Figure 10.7.1 shall be included with all H&H reports, indicating the following information: Note: the Excel file for the blank Summary Data Sheet can be found on the PennDOT H&H webpage at the following address:

www.dot.state.pa.us/Internet/Bureaus/pdDesign.nsf/H&HHomepage?OpenFrameset

a. Location Data.

(1) Project MPMS number.

(2) Name of County.

(3) Name of the USGS Quadrangle the project is located within.

(4) Latitude at project site (12° 34' 56" N).

(5) Longitude at project site (12° 34' 56" W).

(6) Name of Municipality.

(7) Highway route number and section (SR 1234-567).

(8) Highway station of existing bridge crossing (Station 1234+56.78).

(9) Existing highway segment/offset (1234/5678).

(10) List the Functional Classification of the roadway (See Table 10.6.1).

b. Channel/Watershed Data

(1) Name of stream (if the stream is unnamed, indicate as a tributary to a known stream).

(2) Drainage area at the crossing (square miles).

(3) Hydrology method selected to develop peak flows.

(4) Indicate the FEMA Flood Zone Designation. Note: If the site does not have a FEMA designation, list as not applicable (A, AE, B, C, X, N/A).

(5) Indicate the applicable USACE river basin (Ohio, Delaware, Susquehanna, Great Lakes).

(6) Normal flow depth in the existing stream (estimated from field view / stream banks).

(7) Quantify any temporary wetland impacts (acres).

(8) Quantify any permanent wetland impacts (acres).

(9) Quantify all individual types of temporary fill material below the ordinary high water elevation and above the existing streambed/ground (cubic yards). Note: The ordinary high water level is the point on the bank or shore up to which the water, by its presence and action or flow, leaves a distinct mark indicated by erosion, destruction of or change in vegetation or other easily recognizable characteristic.

(10) Quantify all individual types of permanent fill material (e.g. embankment, riprap) below the ordinary high water elevation and above the existing streambed/ground (cubic yards).

c. Bridge/Culvert Characteristics.

(1) Describe the type of bridge or culvert.

(2) Indicate the number of spans.

(3) The skew angle is defined as the angle between the flow direction and a line drawn perpendicular to the bridge face. A skew angle of 0 degrees occurs when a bridge crosses the waterway perpendicular to the flow direction (degrees).

(4) Normal Clear Span is the perpendicular distance from abutment face to abutment face. For multiple span bridges, the normal clear span length of each span should be provided. This is the width component in the PA DEP JPA Facility Data (feet).

(5) Out-to-out length is the length of the structure in the direction of flow. This distance will be greater than the perpendicular structure length in situations where the bridge is skewed to flow direction (feet).

(6) The Total Length of Channel Impacted is the distance from the upstream edge of project impacts (including wing walls and riprap) to the downstream edge (feet).

(7) The low chord elevation is the lowest beam elevation on the underside of the bridge (feet).

(8) Minimum underclearance is smallest distance measured from the streambed to the bridge low chord. For a culvert, minimum underclearance describes the diameter or height of the opening (feet).

(9) Open area is the hydraulic opening area of the bridge or culvert (square feet).

d. Hydraulic Data.

(1) List the Hydraulic Method used in the study.

(2) Enter the existing and proposed hydraulic data for the PennDOT Design event (specify the year event), PA DEP Chapter 105 event (specify the year event), and the 100-year event. If any of the events are duplicated, repeat the values in the table. When HEC-RAS is used, the hydraulic data should be reported from the upstream bounding cross section.

(i) Q - Enter the flow rate corresponding to the return period (cfs).

(ii) WSE - Enter the water surface elevation corresponding to the return period (feet).

(iii) Velocity - Enter the channel velocity corresponding to the return period (ft/s).

(3) Indicate the overtopping event for the existing and proposed structure. This is generally described in relation to an event, rather than a specific year. For example the overtopping event may be described as greater than the 25-year event (> 25-year).

6. Drawings.

a. Roadway plans (preferably 1:500 (1"=50') scale) and profile indicating the following information:

(1) Layout of existing and/or proposed structures, stream channels and wetlands.

(2) Adjacent topographic features with key elevations or contours shown.

(3) Flood limits of the existing and/or proposed structures and/or channels.

(4) Occasional Flowage Easement (Flood Easement), if provided.

(5) Temporary stream crossing, access road, cofferdam, diversion facility, etc. (can be copied from the E&S plan). See Section 10.10 for the items required for fishable streams.

(6) The magnitude, frequency and pertinent water surface elevation for the specified floods.

b. Profile of stream for the limits of the study (consult the HEC-RAS Manual for specific recommendations), showing slopes of bed, normal surface and flood water surface. The profile shall be a drawing to scale and can be printed from the HEC-RAS output.

c. Plan drawing showing the location and orientation of all cross sections used for backwater analysis. The drawing shall be to scale and show contouring and all important hydraulic features. The limits of the hydraulic model must extend a minimum of 150 m (500 ft) upstream and 150 m (500 ft) downstream from the existing and proposed crossings. See the HEC-RAS Hydraulic Reference Manual for specific cross section location recommendations and requirements for bounding structure sections.

d. Cross section output of all cross sections used for backwater analysis.

e. Floodway maps and flood profiles where there are detailed FEMA Flood Insurance Studies.

INTENTIONALLY BLANK

FIGURE 10.7.1
SAMPLE SUMMARY DATA SHEET

Summary Data Sheet

Location Data

MPMS #		Municipality	
County		State Route - Section	
Location - U.S.G.S. Quadrangle		Station	
Latitude		Segment/Offset	
Longitude		Functional Classification	

Channel/Watershed Data

Stream Name		Normal Stream Flow Depth	
Drainage Area		Temporary Wetland Impacts	
Hydrology Method Used		Permanent Wetland Impacts	
FEMA Flood Zone		Temporary Fill below OHW	
River Basin (USACE)		Permanent Fill below OHW	

Bridge/Culvert Characteristics

	Existing Structure	Proposed Structure
Bridge Type		
Number of Spans		
Skew		
Normal Clear Span (Width)		
Out-to-out Length (Dir of Flow)		
Total Length of Channel Impacted		
Low Chord Elevation		
Minimum Underclearance		
Open Area		

Hydraulic Data

		Existing Structure			Proposed Structure		
Hydraulic Method Used							
Return Period	Designation	Q	WSE	Velocity	Q	WSE	Velocity
	PennDOT Design						
	PA DEP Chap 105						
100-year	FEMA						
Overtopping Event							

D. Abbreviated and Full H&H Reports.

1. Design Considerations Included in Drawings.

a. Backwater Computations. Backwater computations are required to determine the geometry of bridge openings. However, for some permits, these computations may be waived by the regulatory agency for one of the following flooding cases:

(1) The proposed bridge is a reconstruction project or an extension of the existing structure where the history of the existing structure and the scope of the proposed project can be utilized as justification to waive the computations.

(2) The proposed bridge is a minor structure where the costly expenditure for the hydraulic report preparation is not warranted and where the existing field condition coupled with a sound engineering judgment can be utilized as a basis to determine the opening.

(3) The backwater determination is of no value and the uniform flow condition is reasonably applicable to the proposed bridge.

However, in the above cases, the hydraulic analysis based on Manning's equation (refer to Section 10.3) should be indicated in the Hydrologic and Hydraulic Report. The provision for applying Manning's equation assuming uniform flow conditions in these cases should not be construed as the Department's acceptance of this formula as a valid method for sizing a bridge opening. It merely serves as a routine hydraulic record for those projects for which the comprehensive hydraulic analysis by the backwater computations is not warranted or is of no significance.

b. Temporary Drainage Facilities. The temporary stream crossing item and other temporary facilities shall be included in the Hydrologic and Hydraulic Report. The approximate length of time that it remains in the stream shall be indicated. If a temporary stream crossing is not required, a statement should be included on the plan in the report describing how traffic or construction equipment can be detoured without entering and disturbing the stream. All temporary facilities to facilitate the permanent structure construction shall be covered in the Report. Joint Agency Guidance developed by PennDOT and PA DEP related to evaluating and permitting temporary structures is included in Chapter 10, Appendix G. This guidance should be followed for permitting temporary structures. This guidance is in addition to meeting the design requirements for temporary crossings as specified in Chapter 18, Section 18.5 and Publication 15M, Design Manual, Part 4, *Structures,* Volume 1, Part A, Chapter 5.

c. Occasional Flowage Easements. When designing a drainage structure, increases in headwater or backwater can be balanced against the structure size and cost. In fact, culvert or bridge design sometimes becomes an economic problem in which structure costs for various headwater elevations are balanced against the estimated costs of possible damage or inconvenience. In some cases, the cost of securing an occasional flowage easement (flood easement) for the structure can be significantly less than the additional expenses required to provide a larger structure.

If the headwater pool created by the recommended size of the structure can result in apparent flood damages, an "occasional flowage easement" shall be provided for this structure. The "occasional flowage easement" shall be designated and indicated on the plans of the Hydrologic and Hydraulic Report and on other appropriate drawings as required.

The use of an "occasional flowage easement" shall be limited to rural and/or other low real estate value areas. In all other areas (residential, commercial, industrial, etc.), the drainage structure should be designed to accommodate the flood discharges without creating increases in flood damages.

To enable an appraiser to make a written report for the actual taking of "occasional flowage easements", the District Right-of-Way Administrator shall be furnished maps and/or drawings showing the maximum elevation of the headwater pool, the flood frequency (usually based on a 100-year flood) and duration data and other available pertinent information for the approved structure. If the flood duration data cannot be determined by means of an analytical method, it should be estimated on the basis of an

extensive field investigation. In this case, it may be advisable to give an over-predicted rather than an under-predicted flood duration.

For the purpose of making an economic analysis to determine the recommended size of the structure in the Hydrologic and Hydraulic Report, the cost of the "occasional flowage easement" used in the analysis may be estimated on the basis of an assumption that the property affected shall be flooded permanently and, therefore, determination of the flood duration data may be omitted. The preliminary cost estimate of the "occasional flowage easement" based on this assumption shall be made by the District Right-of-Way Administrator upon written request. The District Right-of-Way Administrator shall be furnished maps and/or drawings showing the maximum elevation of the design flood headwater pool, the extent of the easement required and other pertinent information as needed. The cost of the easement should be estimated by a qualified appraiser rather than by the designer who prepares the Hydrologic and Hydraulic Report.

d. Fish Passage. Where a culvert is to be installed in a fishable stream, fish passage treatment should be provided in accordance with Section 10.10 and Section 10.11.

e. Multi-Cell Structures. Concerning the minimum individual span width for multi-cell structures, each structure shall be evaluated on its own merit. After evaluating the upstream characteristic and debris problems that are anticipated, the minimum individual span width of a multi-cell structure shall be 4 m (14 ft).

f. Alternate Structure Types. Where the Department's policy requires that alternate structure types be included for bidding in accordance with the alternate design, low cost bridge or short span bridge procedure, all alternate structures should be identified in the Hydrologic and Hydraulic Report. Separate hydraulic analysis should be developed for any alternate structure where the analysis included in the report cannot be reasonably applied to this alternate structure. In some instances, providing an "equivalent effective waterway" may be sufficient to demonstrate the hydraulic adequacy of an alternate structure. Adequate fish passage measures should be provided for the prime as well as all alternate types of structures.

g. PS&E Construction and Structural Plans. For all waterway structures, the construction and structural plans to be submitted for PS&E approvals shall show: (1) the magnitude, return period, and water surface elevations for the design flood and the 100-year flood, if different from the design flood, (2) if available, the magnitude, water surface elevations and dates of occurrence of the flood of record, if greater than the 100-year flood, and (3) if required, the magnitude, return period, and water surface elevations for the overtopping flood.

The waterway structures, including roadway encroachments, should be designed to minimize the flood hazards to properties by:

(1) Limiting backwater to a maximum of 0.3 m (1 ft) based on a 100-year flood unless where:

(i) Higher water levels can be tolerated with minimal damage or
(ii) Mitigation is provided.

(2) Protecting against excessive backwater at crossings resulting from debris or ice blockage or extraordinary large floods by providing:

(i) Relief at or below the 100-year flood level by roadway overtopping or other practicable means or

(ii) Bridge superstructure clearance above the 100-year flood elevation where relief is not provided.

h. FEMA Considerations. For any encroachment into the FEMA regulatory floodway which shall result in an increase of the water surface elevation during a 100-year flood, no permit may be issued by PA DEP unless documentation is obtained from the applicable municipalities certifying to the effect that

the project is consistent with the local floodplain and storm water management programs. This documentation should be obtained by the Engineering District and included in the report. Where there is a need for revising the flood insurance study, the Engineering District should also coordinate with the municipality and FEMA to effect the necessary revision. If any hydrologic or hydraulic data used in the report deviates from the flood insurance study, the Engineering District Office should receive a written clarification or confirmation from FEMA.

2. Coordination with FEMA and Local Municipalities. All projects affecting waterways within National Flood Insurance Program (NFIP) study areas will follow the standard procedures for compliance with floodway regulations (such as, but not limited to, 44 CFR 65.3, 44 CFR 65.12, 23 CFR 650, 42 USC 50, 25 PA Code §105 and §106, and 12 PA Code §113). FEMA's mission is to reduce flood damage by controlling development in FEMA Study Areas, especially FEMA regulatory floodways. Development includes any fill, such as bridge piers and abutments, which acts as an obstruction to flow.

Different project scenarios require different interactions with FEMA and/or local Municipalities on the part of PennDOT to comply with the above regulations. Those scenarios are described below.

Scenario 1: If the proposed project **is not located in a FEMA study area** (detailed or approximate).

PennDOT District Requirements:

No coordination with FEMA. Notify the local Municipality of a significant encroachment, as defined in 23 CFR 650 A, Section 650.105(q), such as an interruption to emergency vehicle routes, or other significant risk.

Scenario 2: If the proposed project is located in a **FEMA study area** (approximate or detailed with or without a FEMA regulatory floodway) and **causes increases** to the 100-year water surface elevations of the Proposed model when compared to the Existing model by any of the following:

a. **less** than or equal to 1-foot in an approximate study area

b. **less** than or equal to 1-foot in a detailed FEMA study area without a FEMA regulatory floodway

c. **less** than or equal to 0.00 feet in a detailed FEMA study area with a FEMA regulatory floodway if fill will be placed in the floodway

d. **less** than or equal to 1-foot in a detailed FEMA study area with a FEMA regulatory floodway if no fill will be placed in the floodway

PennDOT District Requirements:

An electronic version of the final H&H Report and modeling files shall be shared with the local Municipality when the DEP permit is received. The local municipalities responsible for the NFIP map can use PennDOT's data locally to supplement the existing FEMA data and to help the municipality implement their commitment under the NFIP and the PA Flood Plain Management Act (1978 Act 166) in order to regulate development in floodplain areas.

Understanding the role that local ordinances play with respect to PennDOT's projects is important for coordination with the municipalities regarding floodplain issues. Under the National Flood Insurance Program (FEMA) regulations and PA Flood Plain Management Act, PennDOT is not required to obtain approvals under local ordinances (such as a floodplain permit). For State-owned property, the FEMA regulations allow a State to decide whether its property will be subject to local ordinances or to establish floodplain regulations for State-owned property. In Pennsylvania, DEP has chosen through the enactment of the PA Flood Plain Management Act and its regulations at 25 Pa. Code Chapter 106 to address state highway projects located within floodplains using 44 CFR §60.12(a)(2) and (b). The Act provides that DEP has exclusive jurisdiction to regulate "any highway or other obstruction, constructed, owned or maintained by the Commonwealth or a political subdivision thereof." 32 P.S. §679.302(a)(3). PennDOT would be required to comply with the

minimum requirements in the FEMA regulations (44 CFR§§ 60.3, 60.4, and 60.5) and the Chapter 106 regulations - not the local ordinances. However, DEP does consider the consistency of the project with local floodplain plans in conducting its review per 25 Pa. Code §§106.13(b)(7) and 105.13(e)(1)(vi).

The cover letter to the local municipality should include the following content (see sample letters A and B in Figure 10.7.2), and an electronic copy of the cover letter shall be stored in the appropriate location of the JPA2 system (or its successor):

1. A summary of the effect of the project on water surface elevations so the municipality can decide whether it wants to have FEMA (for a fee) update its Flood Insurance Rate Map (FIRM). Brief instructions to the municipality are included in the letter.

2. For the following conditions,

a. the hydrologic analysis produces different peak flow values than used in FEMA flood study

b. flow values are not provided by FEMA in its Flood Study

c. if a project is located in a detailed FEMA study area with a FEMA regulatory floodway and the proposed project will alter the floodplain or floodway boundaries

include in the letter an explanation to the municipality that PennDOT's analysis has produced results that differ from the current effective NFIP model along with a short explanation that highlights the differences.

If the project is in a **FEMA detailed study area without a FEMA regulatory floodway** and **causes an increase between 0.00 and 1.00 feet**, sample letter B in Figure 10.7.2 must be sent to the municipality. If the municipality fails to respond to the letter within 15 days, proceed with the project in the normal fashion. If the municipality responds to the letter stating that the cumulative impact will be greater than 1-foot, contact the Central Office H&H Unit for assistance.

PennDOT Central Office Requirements:

On a semi-annual basis, PennDOT H&H Unit will transfer to FEMA Region 3, in an electronic format, the point shapefiles of projects, latitudes and longitudes of each project, and copies of the cover letters to municipalities.

Scenario 3: If the proposed project is located in a **FEMA study area** (approximate or detailed with or without a FEMA regulatory floodway) and **causes increases** to the 100-year water surface elevations of the Proposed model when compared with the Existing model by any of the following:

a. **greater** than 1-foot in an approximate FEMA study area (per Appendix A June 7, 1982 FEMA Memo with attachment "Procedures for Coordinating Highway Encroachments on Floodplains with Federal Emergency Management Agency" paragraph titled "Highway Encroachment On A Floodplain Indicated On An FHBM")

b. **greater** than 1-foot in a detailed FEMA study area without a FEMA regulatory floodway (per 44 CFR 60.3(c)(10))

c. **greater** than 0.00-foot in a detailed FEMA study area with a FEMA regulatory floodway if fill will be placed in the floodway (per 44 CFR 60.3(d)(3))

d. **greater** than 1-foot in a detailed FEMA study area with a FEMA regulatory floodway if no fill will be placed in the floodway

PennDOT Requirements:

A Conditional Letter of Map Revision (CLOMR) application is to be prepared and sent to FEMA. A CLOMR does not revise an effective NFIP map. The FEMA MT-2 Forms 1, 2, and 3 and the final H&H Report and models must be submitted to FEMA along with the CLOMR fee. Coordination with the local Municipality and affected property owners must occur as prescribed in the MT-2 forms prior to submission of the CLOMR application to FEMA.

If a project in a detailed FEMA study area will increase the 100-year flood elevation to a structure(s) by more than the allowable increase, PennDOT must certify that it has removed the structure(s) before FEMA will approve a CLOMR (see 44 CFR 65.12(a)(5)). For example, if the project is located in a FEMA regulatory floodway (as in Scenario 3c) and a structure is inundated to a depth of 4 feet by the 100-year flood before the project is constructed, but will be inundated an additional depth of 2 inches (total inundation will be 4 feet 2 inches) after the project is constructed, that structure must be purchased and removed by PennDOT before the CLOMR will be approved by FEMA. Certification that the structure(s) has been demolished is required before FEMA will approve the CLOMR.

No later than six months after completion of construction, a Letter of Map Revision (LOMR) is to be prepared and sent to FEMA as an official amendment to the effective NFIP map. A LOMR may change flood insurance risk zones, floodplain and/or floodway boundary delineations, planimetric features, and/or Base Flood (100-year) Elevations. The FEMA MT-2 Forms 1, 2, and 3 and the final H&H Report and models must be submitted to FEMA along with the LOMR fee. Coordination with the local Municipality and affected property owners must occur as prescribed in the MT-2 forms prior to submission of the LOMR request to FEMA.

Sources for additional information, guidance, and forms pertaining to NFIP maps include:

a. "Procedures for Compliance with Floodway Regulations", USACE, May 1990.
b. FEMA's Internet site on flood hazard mapping (www.fema.gov).

INTENTIONALLY BLANK

FIGURE 10.7.2
SCENARIO 2 EXAMPLE TRANSMITTAL LETTERS FOR MUNICIPAL COORDINATION

Sample Letter A - for project in:

- **an approximate FEMA study area, or**
- **a detailed FEMA study area with a FEMA regulatory floodway, or**
- **a detailed FEMA study area without a FEMA regulatory floodway and without an increase in water surface elevation**

Name and address of municipal floodplain coordinator

_____ County, _____ [municipality]
S.R. ____, Section ___ over _____ [waterbody]

Dear Sir/Madam:

PennDOT is proposing to _____ [replace/rehabilitate] a _____ [bridge/culvert] on _____ [example - SR 0094 Section B01 over Big Creek] in your municipality. Enclosed is a copy of the Hydrologic and Hydraulic (H&H) analysis, which indicates that the water surface elevation of the base flood (100-year flood) will be _____ [decreased/increased] by a maximum of ____ feet in the project area.

This project is located in _____ [an approximate FEMA study area **or** a detailed FEMA study area with a FEMA regulatory floodway]. PennDOT is not required to revise the Flood Insurance Rate Maps (FIRMs) because the proposed project does not result in a regulated increase to the 100-year water surface elevation. However, you may choose to request that FEMA update your municipality's FIRMs, to ensure your maps reflect the most accurate information for flood insurance ratings and risk assessment, by referring to the following websites:

http://www.fema.gov/floodplain-management-information-communities

https://www.fema.gov/mt-2-application-forms-and-instructions

Optional paragraph and bullets if applicable:

Other differences between PennDOT's analysis and current effective NFIP study include:

- PennDOT's hydrologic analysis produced different peak flow values than used in the FEMA study. PennDOT's analysis produced a peak flow of _____ cfs for the 100-year event whereas the FEMA peak flow is _____ cfs.

- The FEMA study had no flow values whereas PennDOT's study contains flow values. PennDOT's peak flow is _____ cfs for the 100-year event.

- The proposed project will alter the floodplain or floodway boundaries by _____ [example - moving the floodplain boundary on the upstream right bank 23 feet to the west] when compared to the FEMA floodplain or regulatory floodway.

If you have any questions, please contact _____ at _____.

Sincerely,
District Executive

FIGURE 10.7.2 (CONTINUED)
SCENARIO 2 EXAMPLE TRANSMITTAL LETTERS
FOR MUNICIPAL COORDINATION

Sample letter B - for a project in a detail study area without a FEMA regulatory floodway and causes an increase between 0.00 and 1.00 feet:

Name and address of municipal floodplain coordinator

_____ County, _____ [municipality]
S.R. ____, Section ___ over _____ [waterbody]

PennDOT is proposing to _____ [replace/rehabilitate] a _____ [bridge/culvert] on - _____ [example - SR 0094 Section B01 over Big Creek] in your municipality. Enclosed is a copy of the Hydrologic and Hydraulic (H&H) analysis, which indicates that the water surface elevation of the base flood (100-year flood) will be increased by a maximum of ____ feet in the project area.

This project is located in a detailed FEMA study area without a FEMA regulatory floodway (Zones A1-30 or Zone AE without a floodway). Per 44 CFR 60.3(c)(10), municipalities are to limit construction, substantial improvements, or other development to a cumulative impact of a 1-foot rise in the base flood elevation in detailed FEMA study areas without FEMA regulatory floodways. **If this project results in a cumulative impact of greater than 1-foot, contact this office within 15 days from the date of this letter.** If you do not respond within 15 days, the project will proceed as if the cumulative impact is less than 1-foot. Also, you may choose to request that FEMA update your municipality's NFIP maps by referring to the following websites:

http://www.fema.gov/floodplain-management-information-communities

https://www.fema.gov/mt-2-application-forms-and-instructions

Optional paragraph and bullets if applicable:

Other differences between PennDOT's analysis and current effective NFIP study include:

- PennDOT's hydrologic analysis produced different peak flow values than used in the FEMA study. PennDOT's analysis produced a peak flow of _____ cfs for the 100-year event whereas the FEMA peak flow is _____ cfs.

- The FEMA study had no flow values whereas PennDOT's study contains flow values. PennDOT's peak flow is _____ cfs for the 100-year event.

- The proposed project will alter the floodplain or floodway boundaries by _____ [example - moving the floodplain boundary on the upstream right bank 23 feet to the west] when compared to the FEMA floodplain or regulatory floodway.

If you have any questions, please contact _____ at _____.

Sincerely,
District Executive

FIGURE 10.7.2 (CONTINUED)
SCENARIO 2 EXAMPLE TRANSMITTAL LETTERS
FOR MUNICIPAL COORDINATION

District/Initials/Project

cc: _____ [Name]
Chief, Floodplain Management Division
Department of Community and Economic Development
Keystone Building, 4th Floor
400 North Street
Harrisburg, PA 17120

District Executive
Circulation and File Copies

10.8 PROCEDURE FOR OBTAINING PERMITS FROM THE US COAST GUARD

The Commandant, US Coast Guard, Washington, DC, approves the plans and locations of bridges (including approaches, false work and cofferdams) across Navigable Waters of the United States, prior to the start of construction. The general procedure for obtaining permits from the US Coast Guard is described in this section.

A. Navigable Waters of the United States.

1. The term "Navigable Waters of the United States" is construed to mean those waters of the United States, including the territorial seas adjacent thereto, the general character of which is navigable, and which, either by themselves or by uniting with other waters, form a continuous waterway on which boats or vessels may navigate or travel between two or more States or to or from foreign nations. A stream which otherwise conforms to the above definition would not change its navigable character because of the existence of natural or artificial obstructions such as falls, shallows, rapids, dams or bridges.

2. The Federal Government has the power to improve the navigable capacity of streams and declare such waters to be Navigable Waters of the United States in order to regulate the use thereof and navigation thereon. The erection of dams or other structures on navigable waters would not change their navigable character unless a clear intent to do so was manifested by Congress under its authority to regulate commerce among the States and foreign nations.

B. Jurisdiction of Coast Guard Districts. As indicated in Figure 10.8.1, there are three Coast Guard Districts with jurisdiction over the construction of bridges across the navigable waters in Pennsylvania. Applications for Permits shall be made to the Commander of the District in which the proposed bridge will be located. The addresses and zones of jurisdiction in Pennsylvania for these Districts are as follows:

1. Commander (aowb)
Fifth Coast Guard District
LANTAREA
Federal Building
431 Crawford Street
Portsmouth, VA 23704-5004
Tel: 757-398-6222
Zone of Jurisdiction: East of 79º W Longitude

2. Commander (obr)
Eighth Coast Guard District
1222 Spruce Street
St. Louis, MO 63103-2398
Tel: 314-539-3900, ext. 378
Zone of Jurisdiction: South of 41º N Latitude and
West of 79º W Longitude

3. Commander (obr)
Ninth Coast Guard District
1240 East 9th Street
Cleveland, OH 44199-2060
Tel: 216-902-6085
Zone of Jurisdiction: North of 41º N Latitude and
West of 79º W Longitude

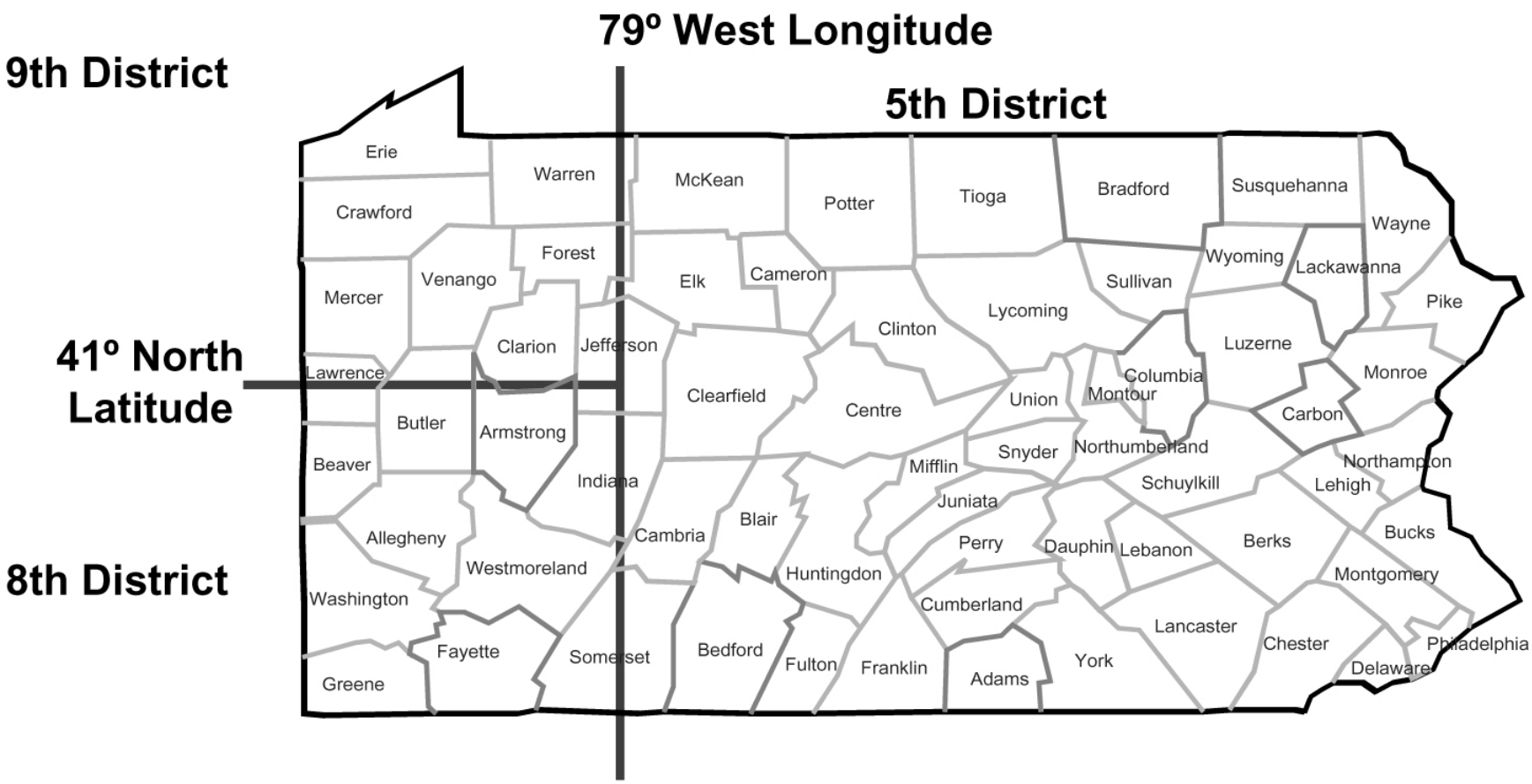

FIGURE 10.8.1
US COAST GUARD DISTRICT BOUNDARIES
IN PENNSYLVANIA

Generally, streams in Pennsylvania that flow into the Atlantic Ocean are in the Fifth Coast Guard District; streams that flow into the Mississippi River are in the Eighth Coast Guard District; and streams that flow into the Great Lakes are in the Ninth Coast Guard District.

An exception to the zones of jurisdiction as described above is found in the headwaters of the Allegheny and Beaver Rivers, navigable portions of which are in the Ninth Coast Guard District (above Latitude 41° N). Applications for bridge permits across these rivers shall be directed to the Eighth Coast Guard District.

C. Navigable Waters in Pennsylvania Requiring Coast Guard Bridge Permits. As mentioned before, a permit shall be obtained from the Coast Guard for the construction of a bridge (including approaches, false work and cofferdams) across a Navigable Water of the United States. Although the general term "Navigable Waters of the United States" was previously defined, it is impossible to make a complete list of these waters in Pennsylvania because of the detailed research and inquiries that must go into each determination by the Commandant of the Coast Guard.

A permit may be waived (subject to the Coast Guard's and/or FHWA's determination) for those bridges which cross non-tidal waters that are not used, susceptible to use in their natural condition, or susceptible to use by reasonable improvement as a means to transport interstate or foreign commerce.

The administrative determinations made by each Coast Guard District for the Navigable Waters of the United States in Pennsylvania are as follows:

1. Eighth Coast Guard District (St. Louis). The approval and permit of the Commandant, US Coast Guard is required for bridges over the following named rivers in Pennsylvania within the Eighth Coast Guard District:

a.	Allegheny River:	Mouth to East Brady, Pennsylvania, Kilometer 115.87 (Mile 72.0)
b.	Monongahela River:	Mouth to Kilometer 207.12 (Mile 128.7)
c.	Youghiogheny River:	Mouth to Kilometer 31.06 (Mile 19.3) at West Newton, Pennsylvania
d.	Ohio River:	The entire length
e.	Beaver River:	Mouth to Kilometer 34.60 (Mile 21.5)
f.	Mahoning River:	Mouth to upstream limits of Warren, Ohio, Kilometer 65.98 (Mile 41.0)
g.	Shenango River:	Mouth to New Castle, Pennsylvania, Kilometer 7.56 (Mile 4.7)

All other navigable streams within this District are considered to be in the Advance Approval Category for bridges. In such cases, assume the clearances provided for high water stages and for the passage of drift are adequate to meet the reasonable needs of navigation.

2. Fifth Coast Guard District (Portsmouth). The Susquehanna River and Codorus Creek are the only waterways in the Fifth Coast Guard District Zone of responsibility in Pennsylvania which are in the advance approval category. All tributaries to the Susquehanna River and Codorus Creek are also included in this advance approval category. Except for the above waterways, no formal administrative determination has been made by the Commandant of the Coast Guard regarding the navigational status of the rivers in Pennsylvania within the Fifth Coast Guard District's zone of responsibility. Although the status of some reaches of the Delaware, Lehigh and Schuylkill Rivers and Chester Creek has not been officially determined by the Coast Guard, these waterways are generally considered as "navigable waters" of the United States and, therefore, a permit from the Coast Guard is required for any bridge across some reaches of these waterways. A bridge permit may also be required for any other streams within this District, the general character of which is navigable or which is actually navigated by boats or vessels.

3. Ninth Coast Guard District (Cleveland). The approval and permit of the Commandant of the US Coast Guard is required for bridges over the following navigable waterways within the Ninth Coast Guard District:

a. Erie Harbor: Located on Lake Erie including the entire channel.

b. Elk Creek: From its mouth at Lake Erie near Lake City, Pennsylvania, upstream (south) approximately 762 m (2500 ft), to the head of the authorized Federal River and Harbor Navigation Improvement Project.

There are no Advance Approval Category waterways over which the Ninth Coast Guard District exercises jurisdiction in Pennsylvania. A bridge permit from the Coast Guard may also be required for any other stream within this District, the general character of which is navigable or which is actually navigated by boats or vessels.

D. Applications for Bridge Permits. To evaluate if a Coast Guard permit is required, make a determination using 23 USC 144 (h) based on information obtained in data gathering and through coordination with the Coast Guard as per 23 CFR 650, Subpart H, Sections 805 through 807. For any bridge which requires a permit from the Coast Guard, the application for the permit shall be filed by the Engineering District Office to the Coast Guard.

The District Executive shall submit the following information for transmittal to the Coast Guard for the bridge permit:

1. A letter from the Department of Environmental Protection certifying that there is reasonable assurance that construction of the proposed structure does not violate the water quality standards of the Commonwealth of Pennsylvania.

2. Two copies of the Environmental Document (Categorical Exclusion, Environmental Assessment or Environmental Impact Statement).

3. A statement pertaining to the cost of the bridge as follows:

a. Cost of bridge with navigational increment.
b. Increase in cost attributable to added clearances provided for navigation.

4. A statement concerning the planned disposition of the existing bridge, if any. If an existing bridge not owned by the Department is to be removed, show consent of the owner for its removal.

5. An original and five copies of the following (size of 8.5 in × 11 in):

a. A map of the vicinity showing the location of the bridge site and the location of any wildlife and waterfowl refuges, recreation areas, public parks or historic sites in the vicinity or in the way of the bridge or its approaches. This map should also include an arrow indicating north, show other bridges in proximity to the proposed bridge and sufficient local characteristics to permit ready identification. The work site should be outlined in red.

b. A plan of the bridge showing the bridge in both plan and elevation views. Outline the navigational opening(s) in red. Navigational clearances may be described as follows:

(1) The minimum horizontal clearance, normal to the axis of the navigational channel, between the faces of the piers or inside any protection works.

(2) The maximum vertical clearance that will be available at the highest point of the navigation span(s).

(3) The least clear height, with respect to the appropriate recognized datum at the site, of the lowest part of the superstructure of the navigation span(s) shall be clearly indicated.

(4) The elevation of the lowest part of the superstructure should be shown at the channelward face of each pier, at the midpoint of the span and, in the case of a haunched bridge, 7.5 m (25 ft) channelward of each pier.

(5) Other related data to be shown as appropriate, including:

(a) Dimensions of the navigation channel. If stream is navigable from bank-to-bank, this may be omitted.

(b) Harbor lines, if established.

(c) Soundings and elevations, in meters (feet), with respect to the established government datum.

(d) The direction of the current (indicated by an arrow).

(e) The direction of true north.

(f) Where appropriate, vertical clearance should be shown above normal pool elevation and the 2% flowline elevation or, on a free-flowline river, above low water elevation and the 2% flowline elevation. The information on 2% flowline elevation may be obtained from the local Corps of Engineers' office.

Only those structural details necessary to illustrate the effect of the proposed structure on navigation should be shown. Drawings should be on 8.5 in × 11 in sheets; show a simple title block in the lower right-hand corner of each sheet. The title block should identify the Department, the bridge and the date of plans.

The information required for the application of the Coast Guard Bridge Permit may be submitted to the Central Office, Bureau of Project Delivery at the time of the waterway submission or at any other appropriate time.

As the required information may vary with individual situations, the District Executive is authorized to contact the appropriate Coast Guard District for information on specific navigation requirements or other particular requirements prior to preparing the materials required for the formal application. However, copies of all correspondence on this matter should be forwarded to the Central Office, Bureau of Project Delivery for information.

For any bridge to be constructed over a stream in the Advance Approval Category, a formal application to the Coast Guard is not required. However, since the Coast Guard recommends that they be advised whenever a bridge is planned over a stream of any consequence, it is suggested that the Engineering District Office forward one set of the preliminary bridge drawings to the Coast Guard for information for those bridges to be constructed under the Advance Approval Category. It would be advisable to obtain a letter of no objection from the Coast Guard as a record.

The need for pier protection from possible ship collision should be evaluated for all bridge piers placed in navigable waterways with substantial commercial navigational traffic.

10.9 PROCEDURE FOR OBTAINING PERMITS FROM THE US ARMY CORPS OF ENGINEERS

This section describes the Department's procedures for obtaining permits from the US Army Corps of Engineers (USACE) for highway improvement projects. It also serves as a general guide to various USACE regulations, including the Section 404 Permit, the Section 10 Permit, and the Pennsylvania State Programmatic General Permit (PASPGP).

It is the Pennsylvania Department of Environmental Protection's (PA DEP's) responsibility to coordinate. To avoid confusion and duplication of effort, PA DEP, in conjunction with the USACE, has developed a Joint Permit

Application (JPA) for activities in, along and across waters (and wetlands) of the Commonwealth. Once a joint permit is submitted to PA DEP, it is considered on record for both state and federal agencies.

The USACE shall receive a copy of the waterway submission from PA DEP thru the JPA process. Upon receipt of the submission, the USACE shall act on confirmation of the applicability of the nationwide permit or process an individual Department of the Army permit (USACE Section 404 permit).

The most common type of USACE permits applicable to highway projects is the Section 404 Permit regarding discharges (placements) of dredged or fill material into waters of the United States. This type of permit is conditionally exempted for maintenance, including emergency reconstruction of bridge abutments or approaches and transportation structures and for temporary sedimentation basins. For projects involving emergency reconstruction, there are different funding requirements between federal sources and 100% state sources. For federal-aid procedures, refer to 23 CFR Part 668; for state procedures, refer to the 4 PA Code § 67.

A "nationwide permit" has been issued by USACE to permit certain discharges of fill material into waters of the United States throughout the Nation. The specific categories of discharges of fill material covered in the nationwide permit, the validity of which is contingent upon the issuance of a Section 401 water quality certification by the State, are indicated in 33 CFR Part 330. The issuance of a water obstruction permit by PA DEP also constitutes approval for the water quality certification. Among highway activities covered in this nationwide permit are:

1. Certain repair, rehabilitation or replacement of the structure and fill which does not deviate from the plans of the original structure or fill.

2. Certain outfall structures and associated intake structures.

3. Certain bank stabilization activities less than 150 m (500 ft) in length and less than an average of 2.5 m^3 of fill material per running meter (1 yd^3 of fill material per running foot) along the bank.

4. Certain highway crossings that involve less than 150 m^3 (200 yd^3) of fill material placed in waters.

5. Certain fill placed for bridges across Navigable Waters of the United States provided a permit is obtained from the US Coast Guard.

6. Certain discharges of fill material that do not exceed 7.5 m^3 (10 yd^3).

7. Federal-aid projects classified as "categorical exclusion".

8. Discharge of concrete into tightly sealed forms or cells.

9. Certain activities performed at a location above the headwaters of the waters of the United States. All USACE's Districts in Pennsylvania have accepted 8 km^2 (3 mi^2) of drainage area as a general rule-of-thumb for determination of the headwaters.

The USACE is responsible for administering Federal regulations under two separate authorities: Section 404 of the Clean Water Act (CWA) of 1972 and Section 10 of the Rivers and Harbors Act of 1899.

A. Section 404. Under the authority of the Section 404(b)(1) Guidelines of the CWA, the USACE exercises jurisdiction over the waters (both navigable and otherwise) of the United States. Section 404 applies to the disposal of dredged or fill material into lakes, rivers and wetlands. Federal regulations on the USACE's permit program are contained in 33 CFR Parts 320-331.

Accordingly, the Department shall obtain approval from the USACE in the form of a Section 404 Permit for all proposed encroachments (not including bridges) involving the placement of dredged or fill materials in the waters of the United States in Pennsylvania. Bridges are not included because placement of pilings for linear projects, such as bridges, generally does not have the effect of a discharge of fill material. All Section 404 permit applications shall comply with the Guidelines in order for the Permit to be issued. The USACE is authorized to determine whether a project complies with the Guidelines.

Section 404 permits are issued through the four USACE Districts which exercise jurisdiction in Pennsylvania (see list below). Some nationwide and regional permits have been issued to cover specific types of discharges. Permit applicants shall provide sufficient information to complete a 404(b)(1) evaluation, which is prepared by the permitting office.

The final determination of acceptability of any proposed discharge of dredged or fill material considers the probable impact, including cumulative impacts of the proposed discharge, on the public interest. The CWA directs that 404(b)(1) Guidelines be promulgated by the Administrator of the USEPA in conjunction with the USACE.

B. Section 10. In addition to dredged or fill discharge permits, the USACE also issues permits for any structures or work that impact the course, capacity, or condition of a navigable water of the United States under Section 10 of the Rivers & Harbors Act of 1899 (33 US Code (USC) Section 403). The Section 10 permit program is managed by the same USACE Districts as the Section 404 permits. Section 10 and Section 404 permits are typically handled jointly. The USACE coordinates Section 10 permits with the US Coast Guard, which issues a notice to navigation.

C. Regional General Permit. The USACE, in coordination with PA DEP, administers a Regional General Permit known as the Pennsylvania State Programmatic General Permit (PASPGP). The PASPGP is a federal CWA, Section 404 Permit for various construction activities involving the discharge of dredge and fill material into waters of the United States. In most cases, a PASPGP can be issued by PA DEP or a county conservation district (with approved Chapter 105 water obstruction and encroachment permits). The validity of the PASPGP is contingent upon the issuance of a Section 401 Water Quality Certification (WQC) by the Commonwealth.

The PASPGP incorporates federal and state permitting standards in one process, and thereby eliminates the need for dual and often redundant permitting procedures. This permit provides a coordinated approach to environmental protection. It divides regulated activities into the following three categories based on the size of the activity and compliance with state and federal permit review standards:

1. Category 1. These activities are not forwarded to the USACE for review and can normally be processed by the appropriate PA DEP regional office or delegated county conservation districts without the need for additional federal review. They include:

a. Activities waived at Chapter 105, Section 105.12 (except waiver #1, #2, and #14); and

b. Activities authorized by a general permit (except for the gravel removal portion of the GP-3 and GP-15).

2. Category 2. These activities are published in the Pennsylvania Bulletin for public comments and as notice to the federal agencies, and can normally be processed by the appropriate PA DEP regional office or delegated county conservation districts without the need for additional federal review. They include:

a. Activities impacting less than one acre of wetland and other bodies of water; and
b. Activities impacting less than 76 m (250 ft) of stream.

3. Category 3. These activities are reviewed individually by the USACE and PA DEP to ensure compliance with the terms and conditions of PASPGP. They include:

a. Activities impacting wetlands within the 14-county range of the bog turtle;

b. Activities impacting more than 76 m (250 ft) of stream;

c. Activities involving dams, weirs, fill or stream channelization in the Juniata and Susquehanna Rivers; and

d. Activities in French, LeBoeuf, Muddy, Conneauttee Creeks or Conneaut Outlet.

Procedurally, the USACE evaluates Category 3 applications, and either determines that the proposed action qualifies under PASPGP, or requires an individual 404 permit review.

4. Non-Qualifying Activities for Authorization. The following activities do not qualify for authorization under PASPGP, and require separate Section 404 and Chapter 105 authorizations, processed by the USACE and PA DEP:

a. Activities impacting more than one acre of water or wetlands; and

b. Activities in the following waterbodies:

- Delaware River
- Beaver River
- Little Beaver River
- Mahoning River
- Monongahela River
- Ohio River
- Lake Erie

and portions of the:

- Schuylkill River
- Lehigh River
- Youghiogheny River
- Allegheny River
- Kiskiminetas River
- Ten Mile Creek

D. Chapter 105/PASPGP General Permit Registration Form. The USACE, in coordination with PA DEP, uses a registration process for a Chapter 105/PASPGP General Permit. The registration process incorporates federal and state permit application requirements to facilitate the concurrent issuance of state and federal permits through one application. General permit registrations require submittal of the following items:

1. Project sketch plan
2. Project location information
3. Consultant information
4. Threatened and endangered species reviews.

The registration package also includes a single and complete project screening process developed to assist the applicants, county conservation districts and PA DEP in determining that all environmental impacts related to the project have been evaluated, minimized and properly permitted. The permit registration process allows the permit applicants, as well as PA DEP and delegated county conservation districts, to ensure that projects meet the requirements of Chapter 105 and PASPGP. The General Permit Registration package is available on PA DEP's website, from Chapter 105 delegated county conservation districts and from PA DEP regional offices.

For copies of PASPGP, contact the Baltimore District Corps of Engineers, Pennsylvania Section, (see address below) or visit the USACE website. For general information on the PASPGP process, contact one of the six PA DEP Regional Offices or the Division of Waterways, Wetlands and Erosion Control.

E. Nationwide Permit (NWP). The NWP program is used when PASPGP cannot be used. The NWP program includes a notification provision that requires the following agencies to be contacted:

1. The US Fish and Wildlife Service (USF&W) and also National Marine Fisheries Service (NMFS) in the Coastal Zone Management (CZM) areas, regarding the presence of endangered or threatened species or critical habitat areas affected by the project.

2. The Pennsylvania Historical and Museum Commission (PHMC) regarding the presence of any historic properties affected by the proposed project.

Refer to 33 CFR Part 330 and current Department directives for a complete listing of the specific categories of discharge of fill material covered in the NWP.

F. Agency Coordination Meeting. The USACE is one of the Federal environmental resource agencies that participates in the Department's Agency Coordination Meeting (ACM) process. In this capacity, the USACE participates fully in the Department's ACM process, as described in Publication 10, Design Manual, Part 1, *Transportation Program Development and Project Delivery Process*, Chapter 3. Coordination with the USACE is also undertaken via agency coordination letters.

G. USACE Districts. As indicated in Figure 10.9.1, there are four USACE Districts which exercise jurisdiction in Pennsylvania. They are:

1. US Army Corps of Engineers, Baltimore District
Attention: CENAB-OP-R
P.O. Box 1715
Baltimore, MD 21203-1715

2. US Army Corps of Engineers, Buffalo District
Attention: CELRB-CO-SR
1776 Niagara Street
Buffalo, NY 14207-3199

3. US Army Corps of Engineers, Philadelphia District
Attention: CENAP-OP-R
100 Penn Square East
2nd and Chestnut Street
Philadelphia, PA 19107-3390

4. US Army Corps of Engineers, Pittsburgh District
Attention: CELRP-OP-F
Federal Building
1000 Liberty Avenue
Pittsburgh, PA 15222-4186

Figure 10.9.1 shows the boundaries of the Civil Works Districts. Note that the boundaries of the Pittsburgh, Baltimore, and Buffalo Civil Works Districts do not coincide with their Regulatory Districts. The Pittsburgh Regulatory District includes those streams draining into the Potomac River and that are located in the Baltimore Civil Works District. Also, the Pittsburgh Regulatory District includes Erie and Crawford Counties and those streams draining into Lake Erie; these are all located in the Buffalo Civil Works District.

Verify in advance with the USACE about which District above has regulatory jurisdiction.

H. Navigable Waters in Pennsylvania Requiring USACE Permits. A permit shall be obtained from the USACE for excavations, fills and construction of any structures (exclusive of bridges) in Navigable Waters of the United States. The administrative determinations made by each USACE District for the Navigable Waters of the United States in Pennsylvania are as follows:

1. Philadelphia District: The navigable waters in the Philadelphia District where permits are required are:

a. All tidal waters and their tributaries to the head of tide
b. Delaware River-----Delaware State Boundary to Hancock, New York and beyond
c. Lehigh River--------114 km (71 mi) to the S.R. 0940 Bridge in Carbon County
d. Manayunk Canal---3.2 km (2 mi) from Flat Rock Dam to Lock Street, Manayunk
e. Schuylkill River----177 km (110 mi) to Port Carbon

Section 10 permits are required for all construction activities in the above waters.

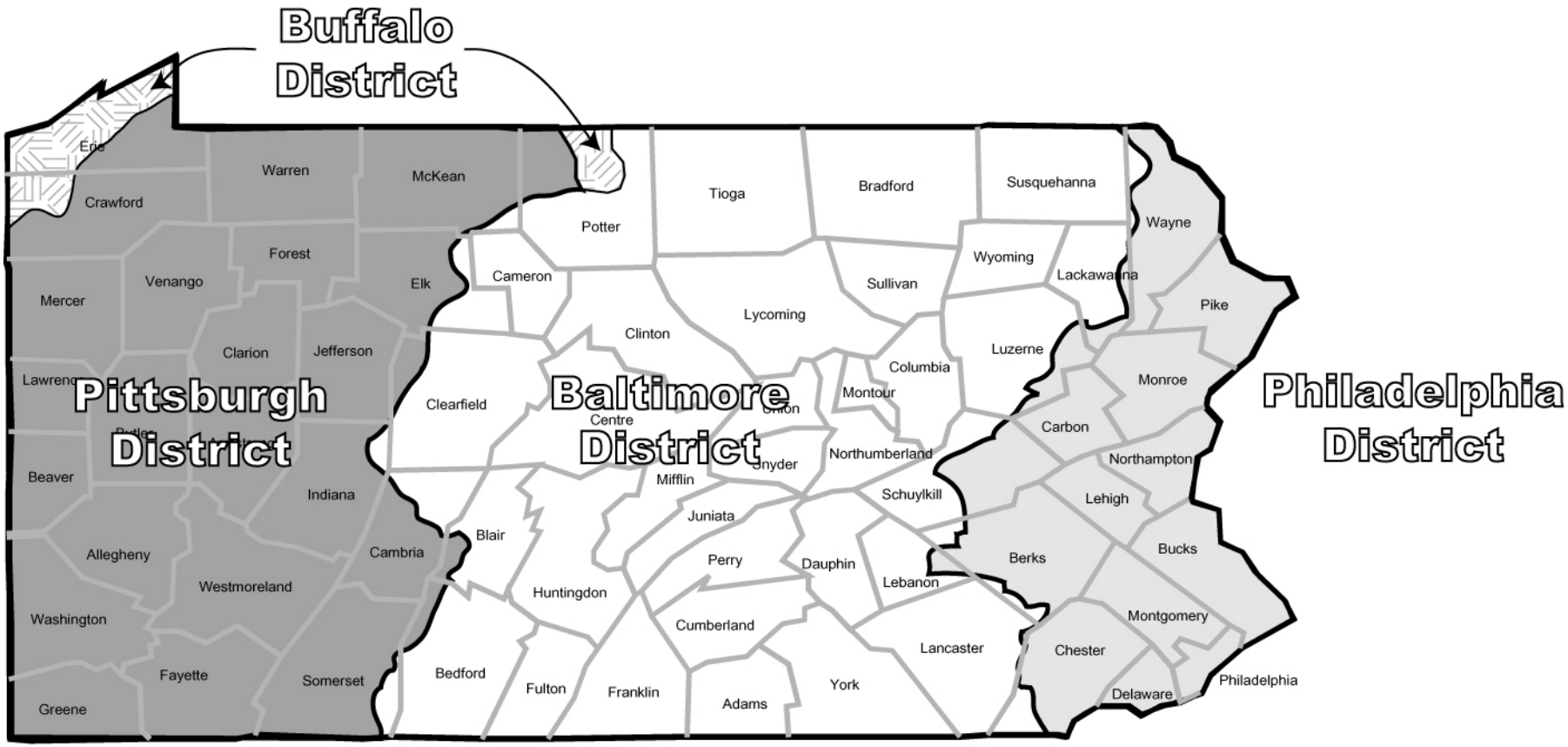

FIGURE 10.9.1
US CORPS OF ENGINEERS DISTRICT BOUNDARIES
IN PENNSYLVANIA

2. Baltimore District: The Baltimore District exercises jurisdiction over the Susquehanna River from its mouth upstream as far as Lock Haven, Pennsylvania on the West Branch and Athens, Pennsylvania on the North Branch. The only tributary to the Susquehanna River over which the District exercises jurisdiction is Codorus Creek.

3. Pittsburgh District: The navigable waters in the Pittsburgh District, where permits are required, are the Ohio, Allegheny, and Monongahela Rivers, and their respective tributaries, as listed below (with jurisdiction in kilometers (miles) above mouth in parentheses):

a. Ohio River and Tributaries.

1. Ohio River (head to Ohio State Boundary)
2. Chartiers Creek (3.06 km (1.9 mi))
3. Beaver River (Entire Length) (34.60 km (21.5 mi))
4. Mahoning River (Tributary of Beaver River) (mouth to Ohio State Boundary)
5. Shenango River (Tributary of Beaver River) (2.90 km (1.8 mi))
6. Raccoon Creek (2.90 km (1.8 mi))
7. Little Beaver River (mouth to Ohio State Boundary)

b. Allegheny River and Tributaries.

1. Allegheny River (mouth to New York State Boundary)
2. Kiskiminetas River (43.13 km (26.8 mi))
3. Conemaugh River (Tributary of Kiskiminetas River (83.20 km (51.7 mi))
4. Crooked Creek (2.41 km (1.5 mi))
5. Mahoning Creek (2.25 km (1.4 mi))
6. Redbank Creek (2.41 km (1.5 mi))
7. Clarion River (144.84 km (90.0 mi))
8. Tionesta Creek (0.48 km (0.3 mi))

c. Monongahela River and Tributaries.

1. Monongahela River (mouth to West Virginia State Boundary)
2. Youghiogheny River (50.21 km (31.2 mi))
3. Ten Mile Creek (4.35 km (2.7 mi))
4. Cheat River (5.47 km (3.4 mi))

d. Lake Erie-------Ohio State Boundary to New York State Boundary. The entire length of Lake Erie is considered navigable for work below elevation 573.4.

4. Buffalo District: The navigable waters in the Buffalo District where the permits are required are:

a. Erie Harbor-----Located on Lake Erie (includes entrance channel)
b. Elk Creek-------Authorization Federal Project

Note: For projects in Pennsylvania, the Buffalo District has delegated its authority for regulatory permits to the Pittsburgh District.

Note that the provisions for permit requirements for the above listed waterways merely represent the views of the Department of the Army since jurisdiction of the United States can be conclusively determined only through judicial proceedings. Also note that the administrative determination of the navigable waters made by the USACE differs from that made by the US Coast Guard in many cases.

I. USACE Water Resources Development Projects. Figure 10.9.1 identifies the boundaries of the four USACE Districts with jurisdiction in Pennsylvania. Approvals for work affecting a USACE project shall be obtained from the District Engineer of the appropriate USACE District.

J. Application for Permits from the USACE. As indicated in Section 10.9, the USACE shall receive a copy of the waterway submission from PA DEP thru the Joint Permit Application process. Upon receipt of the submission, the USACE shall act on confirmation of the applicability of the nationwide permit or process an individual Department of the Army permit (USACE Section 404 permit).

Whenever an individual USACE permit is required, it should be prepared and submitted through the JPA_2 Expert System. The standard application form, as indicated in 33 CFR 325 (ENG Form 4345, "Application for Department of the Army Permit"), is to be prepared and submitted to the USACE. The application form is to include a complete description of the proposed activity including necessary drawings, sketches, or plans sufficient for public notice; the location, purpose, and need for the proposed activity; scheduling of the activity; the names and addresses of adjoining property owners; the location and dimensions of adjacent structures; and a list of authorizations required by other federal, interstate, state, or local agencies for the work, including all approvals received or denials already made.

The Joint Permit Applications are generally submitted after the National Environmental Policy Act (NEPA) or other environmental documents have been approved and the projects are in final design. This practice may not be considered effective for complex projects since the processing of the USACE permits during the final design stage may not provide sufficient lead time to meet the desired letting schedules. For these projects, the USACE permit action should be initiated concurrently with the NEPA process. The recommended procedure for the time merger of these actions is indicated in the following item.

K. Advance Processing of Department of the Army Permit. The required permit action, as to whether or not the proposed highway fill activities are subject to an individual USACE permit, should be determined during the Engineering and Environmental Scoping Field Views or at a time soon afterward. This determination should be completed by the Engineering District before an environmental document is prepared. If it is determined that an individual USACE permit is required and that an advance processing of the permit during the NEPA process is recommended, the Engineering District should submit the necessary information required for processing the permit application to the Bureau of Project Delivery in accordance with the following timings based on the applicable environmental procedures indicated:

1. Environmental Impact Statement (EIS):

a. Single or Preferred Build Alternative Recommended. Submit the Section 404 information as soon as the draft EIS is approved for distribution.

b. Multiple Build Alternatives Without Preferred Build Alternative Recommended. Submit the Section 404 information after the pre-final EIS identifying a selected alternative is reviewed by the FHWA Division and submitted to the FHWA Regional Office, but before the final EIS is approved.

2. Environmental Assessment (EA):

a. Single or Preferred Build Alternative Recommended. Submit the Section 404 information as soon as the EA is approved for availability.

b. Multiple Build Alternatives Without Preferred Build Alternative Recommended. Submit the Section 404 information after the revised EA is prepared, but before the Finding Of No Significant Impact (FONSI) is approved.

3. Categorical Exclusion (CE). Submit the Section 404 information as soon as the CE is approved and final design is initiated, preferably before the hydrologic and hydraulic report is submitted for a waterway approval.

INTENTIONALLY BLANK

If an advance processing of the USACE permit during the NEPA process stage is recommended, the following information shall be submitted by the Engineering District to the Bureau of Project Delivery for processing the permit:

- Completed ENG Form 4345, "Application for Department of the Army Permit".
- Two copies of the environmental documents, as required.
- One set of original 8.5 in × 11 in drawings and five sets of the prints of the same, showing all pertinent features of the design layouts as well as those of all applicable and practical alternates of the temporary construction facilities.

For Department projects, the District Executive signs the application for a USACE permit. However, for municipal projects using Federal-aid funds, the Engineering District Office shall obtain from the applicable municipal authority and, after their review, submit to the Bureau of Project Delivery the above specified information including the completed permit application form (ENG Form 4345) signed by an appropriate municipal official.

Advancing the USACE permit submissions in the NEPA process stage requires that bridge, hydraulic and roadway design engineers be involved in the development of project concepts and continue to be involved as the concepts are refined. Certain designs should be prepared when details are needed to respond to the environmental and related engineering concerns raised as part of the NEPA process as to supply adequate information for the USACE permit applications. Detailed engineering design may not be required for the purpose of preparing the information required for submitting a permit application. Available information on location, fill quantities and facility design should be sufficient to focus on major permit issues. Additional detailed information may always be supplemented, as needed, after a permit application is submitted.

A USACE Section 404 permit submission should be prepared to cover the entire project limits for which an environmental document has been developed.

For a highway project involving both individual and nationwide permit activities, a single USACE permit submission should be developed to cover all of these activities. Pertinent information should be included in the submission to identify as to which type of the permit action (individual or nationwide permit) will be applicable to each specific location of the fill activity. In this case, the Engineering District should obtain from the PA DEP Regional Office a water quality certification covering all fill activities for the entire highway project unless all of the activities are covered by the PA DEP water obstruction permits.

L. Application for Approvals for Work in USACE Water Resources Projects Areas. The information required to obtain approval from the USACE for proposed work affecting a USACE water resources project area may vary with the nature of the project and/or the USACE District in which it is located. In many cases, the USACE will not grant an official approval until the final construction and structural drawings are developed. However, in some cases, the USACE may grant the approval based on a submission of the Hydrologic and Hydraulic Report.

For any proposed work which may affect the USACE water resources facilities, the District Executive may submit the Hydrologic and Hydraulic Report directly to the USACE for approval or comments. Upon receipt of the approval or comments from the USACE, the District Office shall take further actions that are required, if any, at the time the waterway approval is issued or at any appropriate time as deemed proper. It is the District Executive's responsibility to coordinate with the local flood control or water resources authorities, if necessary.

If the proposed work involves occupation of lands acquired by the Federal Government or alteration of the USACE facilities, a consent agreement shall be obtained from the USACE. It is the District Executive's responsibility to obtain the consent agreement directly from the USACE. In general, the consent agreement can be granted from the USACE only subsequent to the development of final plans.

M. Preliminary Consultation with the USACE. The District Executive is authorized to contact the USACE for a preliminary consultation for the proposed work involved. The preliminary consultation may often be necessary in order to avoid the unnecessary expense of preparing plans for work for which none are required, or for preparing materials that do not meet the requirements of the USACE. Copies of all correspondence with the USACE should be forwarded to the Central Office, Bureau of Project Delivery for information.

10.10 CHANNEL CONSTRUCTION INVOLVING FISHABLE STREAMS

A. Design Procedures. In order to give full consideration to the effects of channel construction on aquatic habitat, the following items shall be made part of the design procedures:

1. The stream affected shall be checked as to its inclusion in the stockable warm water and trout streams list. The stream of interest shall also be checked for inclusion on PFBC's list of Pennsylvania Stream Sections that Support Wild Trout Reproduction. PFBC updates its list annually, which is available through its website. PFBC shall be consulted if there is any question regarding its applicability. If the stream is on the list or is a private fishable stream, every effort should be made to avoid any channel encroachment caused by the highway section.

2. Where stream relocation is necessary, consideration should be given for the seeding of all disturbed areas, using rip rap for slope protection at locations where severe bank erosion would occur and placing stone deflectors or gabions (stone-filled wire baskets) for channel bottom protection to aid restoration of fish habitat. The relocated channel should bear resemblance to a natural stream having meandering alignment, varied stream widths, pools, chutes, boulders, etc. Sub-channels with an elevated floodplain should be provided (see Figure 10.10.1), if the new channel is wider than the existing one to accommodate flood discharges.

3. For stream relocation where excessive turbidity during construction shall affect fish life, consideration should be given to using a temporary channel for stream divergence.

4. When existing channels must be widened to provide for the design flood discharge, bench widening design should begin at the edge of stream 0.3 m (1 ft) (or more) above the stream bed whenever normal flow conditions permit (see Figure 10.10.1).

If the normal flow stream depth is greater than 0.3 m (1 ft), then the District Office should make a recommendation as to the depth of bench as part of the Hydrologic and Hydraulic Report submission. The depth indicated should be such as to preclude extreme channel widening. All disturbed areas should be seeded. The application of this design procedure should reduce the problem of construction equipment encroaching into the natural channel. In addition, the existing channel acts as a sub-channel for the passage of fish during low flow periods.

5. A low flow fish passage treatment, as indicated in Section 10.11, should be provided in a culvert to maintain a minimum flow for fish passage. Follow BD-632M unless specific project coordination with PFBC is required.

6. To further reduce stream turbidity and the destruction of fish habitat during construction, one of the following or similar types of stream crossings shall be used:

a. If the normal flow stream depth is greater than 0.3 m (1 ft), a battery of pipes with rock material in the embankment should be provided. These pipes should be of adequate strength to sustain embankment and vehicular loadings and of sufficient capacity (hydraulic computations necessary) to pass normal flow discharge with due consideration given to backwater effects.

b. If the stream bed is of earth or erodible material and the normal flow stream depth is less than 0.3 m (1 ft), a layer of rock approximately 0.3 m (1 ft) in depth by 6.0 m (20 ft) in width should be provided.

The above types of stream crossings are not all-inclusive. Other types of crossings may be considered. In every case, however, the Engineering District Office should make a recommendation as to the type and location of the stream crossing as part of the Hydrologic and Hydraulic Report submission.

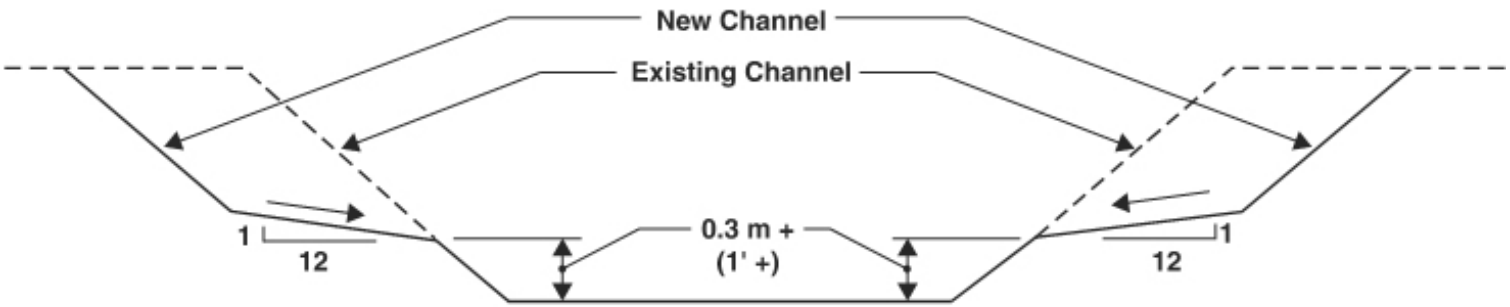

FIGURE 10.10.1
Elevated Flood Plain

B. No Construction Crossing. The following condition does not require a constructed crossing. If the stream bed is rock or non-erodible material and normal flow stream depth is less than 0.3 m (1 ft), a designated stream crossing should be made at the time of construction at the job site. This requirement for the temporary stream crossing is also applicable to non-fishable streams:

1. When existing channels are to be cleaned, a clam bucket, drag line or other types of construction equipment capable of working outside of the existing channel should be specified in the proposal to lessen the effects of the construction operation.

2. As indicated in Section 10.5, PFBC generally requires that no work is to be done in the stocked trout stream between March 1 and June 15. In the event a waiver of this restriction period is necessary, proper justifications, as required in Section 10.5, shall be provided.

C. Plan Requirements. Items in Section A above, with the exception of Item 1, shall be included in the plans of the Hydrologic and Hydraulic Report submission. In addition, they shall be designated on the final construction plans and included as part of the drawings and contract proposal.

10.11 LOW FLOW FISH PASSAGE THROUGH HIGHWAY CULVERTS

A. Purpose. The purpose of this Section is to provide general guidance regarding the design of economical and functional low flow fish passage systems through highway culverts.

B. Background. For culvert locations on streams with continuous flow, the ability to accommodate migrating and resident fish is an important design consideration. Excessive velocity, inadequate water depth, and high outlet elevations are the most frequent causes of fish passage problems. Culverts should be designed to simulate the natural stream bottom conditions by maintaining desirable flow depths and velocities. Constructing depressed culverts with baffles will help to simulate natural conditions by promoting the deposition and retention of stream bed material inside the culvert. The stream bed material between the baffles will increase the roughness coefficient of the culvert bottom, which helps to maintain the minimum flow depth and reduce velocities. Baffles or weir plates have been added for this purpose. Detailed guidelines for the design of baffle systems are provided apart from the description of other fish passage methods.

C. Policy/Procedure.

1. Arrangements for fish passage should be provided in culverts in streams having continuous flow.

2. The Hydrologic and Hydraulic Report shall contain information as to whether the stream flow is continuous or intermittent. The report shall contain all necessary information to support the choice of providing or not providing the fish passage through the culvert.

3. The proposed fish passage arrangements shall be indicated on the plans for the proposed culvert and be designed in accordance with BD-632M.

D. Design Guidelines.

1. The normal flow depth at any point in the culvert may vary from 0.08 m to 0.2 m (3 in to 8 in) depending upon the species and size of fish, but in any case, it shall not be less than 0.08 m (3 in).

2. A stable condition is required at the inlet and outlet ends of the culvert for a good fish passage system. Choked rip-rap or similar measures should be provided at the inlet and outlet ends of the culvert.

3. Measurement of Streambed Slope is needed to design a fish passage. Slope is a function of elevation drop and distance. Calculation of a bed slope of a certain section of a stream depends on the location of the measurement points. Selection of the measurement points is not an exact science. It is rather a matter of personal judgment. Multiple measurements will likely result in slightly different slopes, and streambed slopes will change over time. An approximate slope can be obtained and is all that is necessary for analysis of fish passage through culverts. An approximate slope is obtained by reviewing the profile of the surveyed

streambed and measuring the slope between two points. To develop the stream bed profile, the elevation of the stream thalweg is measured and plotted. Elevations of plunge pools may be included in the streambed profile, but caution should be exercised if using these points as one of the two slope measurement points. Since the survey extends 100 ft to 500 ft upstream and downstream of the structure, the slopes are measured over a length of 200 to 1000 ft. This distance will average out any localized extreme slopes. When measuring the streambed slope, judgment should be used to select measurement points that are most representative of the average streambed slope. Two or more measurements of slope should be averaged to obtain the average streambed slope.

4. The selection of the type (see E below) of fish passage depends upon the conditions of the stream site, ease of installation, and maintenance.

E. Fish Passage Methods/Alternates.

1. Culverts with Fish Baffles (see Figures 10.11.1 and 10.11.2). This section provides guidance to designers on the hydraulic properties of culverts with baffles, configured according to Publication 218M, *Standards for Bridge Design*, Drawing BD-632M titled, "Standard, R.C. Box Culvert." BD-632M provides miscellaneous details for stream grades less than or equal to 4 percent and for grades greater than 4 percent.

Two methods of modeling culverts with fish baffles are provided as follows:

a. Standard Method. The standard method represents the most simplified method of modeling culverts and requires the following:

(1) Box culverts with fish baffles designed in accordance with BD-632M are to be modeled assuming that the 0.3 m (1 ft) depression below the natural stream bed elevation is filled in with sediment. For example, a 3.0 m × 1.8 m (10 ft × 6 ft) culvert opening depressed 0.3 m (1 ft) in accordance with BD-632M should be modeled with a 3.0 m × 1.5 m (10 ft × 5 ft) hydraulic opening.

(2) The Manning's n-value for the bottom of the hydraulic opening should be assumed to be the Manning's n-value for the natural channel material of the stream and the Manning's n-value for the sides and top of the culvert should be for the material of the culvert.

(3) This modeling approach represents culverts filled with sediment between the baffles up to the depressed depth and can be applied to culverts with fish baffles under any flow condition.

Figure 10.11.1 is a graphic representation of the standard method for modeling the hydraulics of a depressed culvert.

b. Alternate Method. An alternate method of modeling culverts with fish baffles has been developed through research conducted by FHWA in the 1970's. Details of the research are contained in the publication, *Design Consideration and Calculations for Fishways Through a Box Culvert* by R. M. Chang and Jerome M. Norman. This alternate method involves the use of special fish baffle Manning n-values in conjunction with modeling the full opening of the culvert. The assumption is that all sediment will be flushed from the culvert from high stream velocities leading up to the critical event. In many cases, this approach will result in a more hydraulically efficient culvert than the standard method for the full flow condition. The use of special fish baffle Manning's n-values and full opening of the culvert requires the following:

(1) Proof that the culvert is flowing full for selected design events.

(2) Consideration of roadway overtopping which may occur before the culvert flows full.

(3) Downstream tailwater submergence which may reduce velocities in the culvert.

(4) D_{50} of streambed material to determine critical velocity to flush the sediment from the culvert.

(5) Velocity through the culvert during design events to determine if sediment is removed from the culvert.

(6) The hydraulic opening modeled is the full opening.

Table 10.11.1 and Table 10.11.2 present Manning's n-values for the alternate method for culverts with fish baffles for slopes greater than 4 percent and for slopes less than or equal to 4 percent. Figure 10.11.2 is a graphic showing the alternate method for modeling culvert hydraulics.

Because of the complexities in using the special fish baffle n-values, the alternate method of modeling culverts with fish baffles may be used only in special circumstances with approval from the Bureau of Project Delivery, Highway Delivery Division, Highway Design and Technology Section, Hydrology and Hydraulics Unit.

2. Open Bottom Culverts (see Figure 10.11.3). Some culverts are supported on spread foundations to permit retention of the natural streambed. RC frame culverts, open bottom metal plate arches or slab bridges are included in this category. While open bottom culverts may be a preferred type from the standpoint of fish passage, rock protection required for protection against scour may encompass a large area of the streambed beneath the structure. Thus the ability to retain the natural streambed may be limited. Additionally, open bottom culverts may not always be the most advantageous from a hydraulic, structural, or foundation point of view.

F. Multi-Cell Culvert Installations. In multi-cell culvert installations, it is generally sufficient to install baffles in only one barrel. The other(s) then act(s) as a free channel. The only requirement regarding the free flow barrel is that a weir of a sufficient height (usually 450 mm (18 in)) be installed across the inlet to deflect low flow through the baffled culvert. (See Publication 218M, *Standards for Bridge Design*, Drawing BD-632M, for twin cell details.)

For multi-cell depressed culverts, weirs may be required at the entrance of some cells to provide adequate flow depths in the primary cell.

In certain cases, it is possible to place the invert of the primary barrel lower than the others to increase the depth of flow in the primary barrel.

G. Conclusions. Each stream and each site have different conditions that require consideration in the design of a fish passage system. During the project development process, direct coordination is recommended between the Department and PFBC to establish the design considerations for each specific stream and site. This coordination should occur as early as practical during the design phase to ensure that all project objectives are met.

INTENTIONALLY BLANK

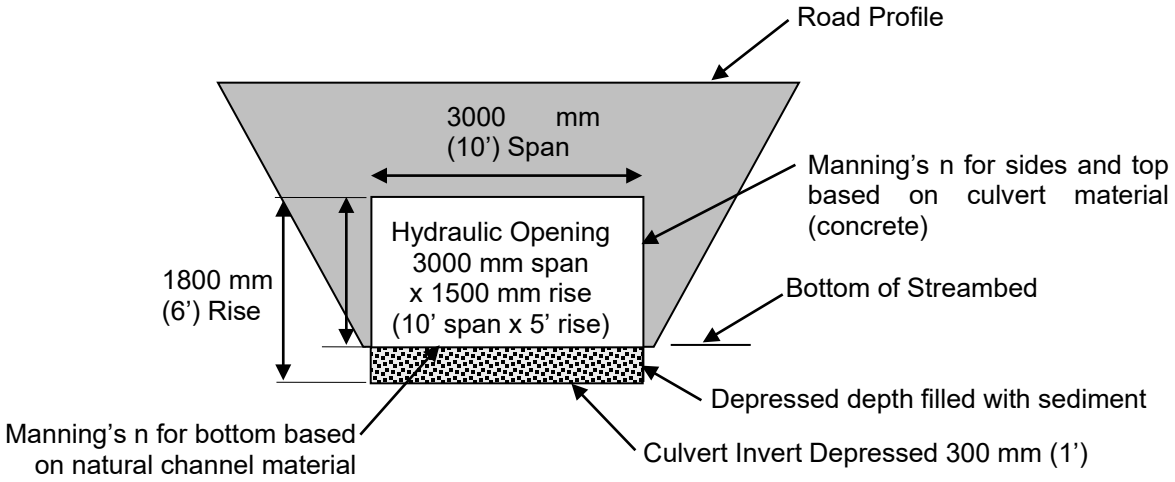

FIGURE 10.11.1
DEPRESSED CULVERT WITH FISH BAFFLES
USING THE STANDARD METHOD

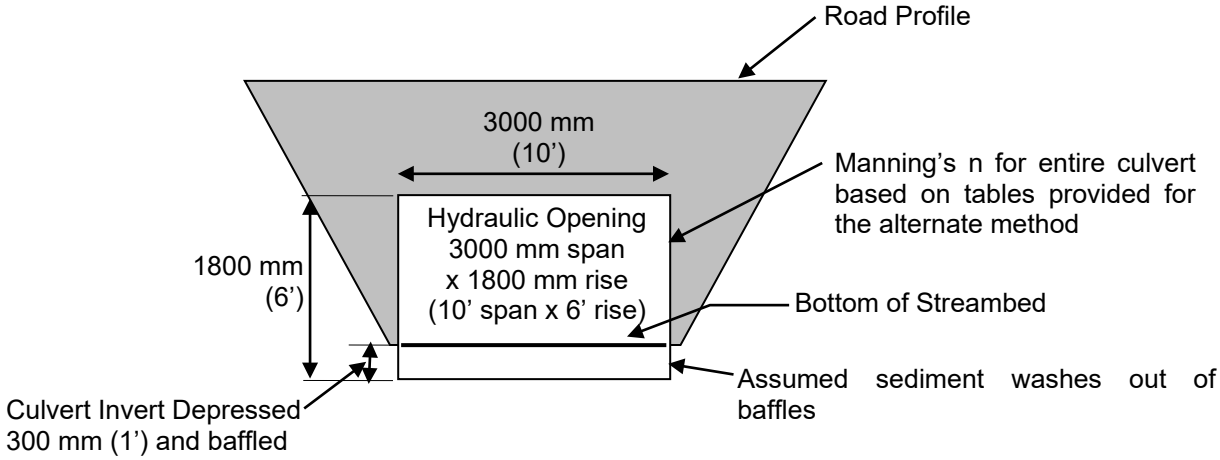

NOTE: Using the Alternate Method must be approved by Bureau of Project Delivery, Highway Delivery Division, Highway Design and Technology Section, Hydrology and Hydraulics Unit.

FIGURE 10.11.2
DEPRESSED CULVERT WITH FISH BAFFLES
USING THE ALTERNATE METHOD

TABLE 10.11.1 (METRIC)
MANNING'S "n" VALUES FOR ALTERNATE METHOD OF MODELING BOX CULVERTS WITH FISH BAFFLES AND SLOPE > 4%

RISE OF CULVERT (mm)	SPAN OF CULVERT (mm)																		
	1800	2100	2400	2700	3000	3300	3600	3900	4200	4500	4800	5100	5400	5700	6000	6300	6600	6900	7200
1200	0.046	0.048	0.049	0.047	0.046	0.044	0.043	0.042	0.041	0.040	0.039	0.038	0.037	0.037	0.036	0.035	0.035	0.034	0.034
1350	0.045	0.047	0.048	0.046	0.045	0.044	0.043	0.041	0.040	0.040	0.039	0.038	0.037	0.036	0.036	0.035	0.035	0.034	0.034
1500	0.044	0.046	0.047	0.046	0.044	0.043	0.042	0.041	0.040	0.039	0.038	0.038	0.037	0.036	0.036	0.035	0.035	0.034	0.034
1650	0.044	0.045	0.047	0.045	0.044	0.043	0.042	0.041	0.040	0.039	0.038	0.038	0.037	0.036	0.036	0.035	0.034	0.034	0.033
1800	0.043	0.045	0.046	0.045	0.044	0.042	0.041	0.040	0.040	0.039	0.038	0.037	0.037	0.036	0.035	0.035	0.034	0.034	0.033
1950	0.042	0.044	0.045	0.044	0.043	0.042	0.041	0.040	0.039	0.039	0.038	0.037	0.036	0.036	0.035	0.035	0.034	0.034	0.033
2100	0.042	0.043	0.045	0.044	0.043	0.042	0.041	0.040	0.039	0.038	0.038	0.037	0.036	0.036	0.035	0.035	0.034	0.034	0.033
2250	0.041	0.043	0.044	0.043	0.042	0.041	0.040	0.039	0.039	0.038	0.037	0.037	0.036	0.035	0.035	0.034	0.034	0.034	0.033
2400	0.040	0.042	0.044	0.043	0.042	0.041	0.040	0.039	0.038	0.038	0.037	0.036	0.036	0.035	0.035	0.034	0.034	0.033	0.033
2550	0.040	0.042	0.043	0.042	0.041	0.040	0.040	0.039	0.038	0.037	0.037	0.036	0.036	0.035	0.035	0.034	0.034	0.033	0.033
2700	0.039	0.041	0.043	0.042	0.041	0.040	0.039	0.039	0.038	0.037	0.037	0.036	0.035	0.035	0.034	0.034	0.034	0.033	0.033
2850	0.039	0.041	0.042	0.041	0.040	0.040	0.039	0.038	0.038	0.037	0.036	0.036	0.035	0.035	0.034	0.034	0.033	0.033	0.033
3000	0.038	0.040	0.042	0.041	0.040	0.039	0.039	0.038	0.037	0.037	0.036	0.036	0.035	0.035	0.034	0.034	0.033	0.033	0.032
3150	0.038	0.040	0.041	0.040	0.040	0.039	0.038	0.038	0.037	0.036	0.036	0.035	0.035	0.034	0.034	0.034	0.033	0.033	0.032
3300	0.037	0.039	0.041	0.040	0.039	0.039	0.038	0.037	0.037	0.036	0.036	0.035	0.035	0.034	0.034	0.033	0.033	0.033	0.032
3450	0.037	0.039	0.040	0.040	0.039	0.038	0.038	0.037	0.036	0.036	0.035	0.035	0.035	0.034	0.034	0.033	0.033	0.032	0.032
3600	0.036	0.038	0.040	0.039	0.039	0.038	0.037	0.037	0.036	0.036	0.035	0.035	0.034	0.034	0.033	0.033	0.033	0.032	0.032
3750	0.036	0.038	0.040	0.039	0.038	0.038	0.037	0.037	0.036	0.035	0.035	0.035	0.034	0.034	0.033	0.033	0.033	0.032	0.032
3900	0.036	0.037	0.039	0.039	0.038	0.037	0.037	0.036	0.036	0.035	0.035	0.034	0.034	0.034	0.033	0.033	0.032	0.032	0.032
4050	0.035	0.037	0.039	0.038	0.038	0.037	0.037	0.036	0.036	0.035	0.035	0.034	0.034	0.033	0.033	0.033	0.032	0.032	0.032
4200	0.035	0.037	0.038	0.038	0.037	0.037	0.036	0.036	0.035	0.035	0.034	0.034	0.034	0.033	0.033	0.032	0.032	0.032	0.031
4350	0.034	0.036	0.038	0.038	0.037	0.036	0.036	0.036	0.035	0.035	0.034	0.034	0.033	0.033	0.033	0.032	0.032	0.032	0.031
4500	0.034	0.036	0.038	0.037	0.037	0.036	0.036	0.035	0.035	0.034	0.034	0.034	0.033	0.033	0.033	0.032	0.032	0.032	0.031
4650	0.034	0.036	0.037	0.037	0.036	0.036	0.035	0.035	0.035	0.034	0.034	0.033	0.033	0.033	0.032	0.032	0.032	0.031	0.031
4800	0.033	0.035	0.037	0.037	0.036	0.036	0.035	0.035	0.034	0.034	0.034	0.033	0.033	0.033	0.032	0.032	0.032	0.031	0.031

NOTES:

1. Use of the Alternate Method of Modeling Box Culverts with Fish Baffles requires approval from the Bureau of Project Delivery, Highway Delivery Division, Highway Design and Technology Section, Hydrology and Hydraulics Unit.
2. Manning's n values for standard baffle configuration in culvert on slope as per BD-632M. For other baffle configurations, see reference in Note 2.
3. n-values calculated based on methodology in Design Considerations and Calculations for Fishways through a Box Culvert by Fred F. M. Chang and Jerome M. Norman (Sept. 1976, FHWA).
4. Above n values assume full flow.
5. n-values are for the entire culvert, bottom, top, and sides.

TABLE 10.11.1 (ENGLISH)
MANNING'S "n" VALUES FOR ALTERNATE METHOD OF MODELING BOX CULVERTS WITH FISH BAFFLES AND SLOPE > 4%

RISE OF CULVERT (ft)	SPAN OF CULVERT (ft)																		
	6	7	8	9	10	11	12	13	14	15	16	17	18	19	20	21	22	23	24
4.0	0.046	0.048	0.049	0.047	0.046	0.044	0.043	0.042	0.041	0.040	0.039	0.038	0.037	0.037	0.036	0.035	0.035	0.034	0.034
4.5	0.045	0.047	0.048	0.046	0.045	0.044	0.043	0.041	0.040	0.040	0.039	0.038	0.037	0.036	0.036	0.035	0.035	0.034	0.034
5.0	0.044	0.046	0.047	0.046	0.044	0.043	0.042	0.041	0.040	0.039	0.038	0.038	0.037	0.036	0.036	0.035	0.035	0.034	0.034
5.5	0.044	0.045	0.047	0.045	0.044	0.043	0.042	0.041	0.040	0.039	0.038	0.038	0.037	0.036	0.036	0.035	0.034	0.034	0.033
6.0	0.043	0.045	0.046	0.045	0.044	0.042	0.041	0.040	0.040	0.039	0.038	0.037	0.037	0.036	0.035	0.035	0.034	0.034	0.033
6.5	0.042	0.044	0.045	0.044	0.043	0.042	0.041	0.040	0.039	0.039	0.038	0.037	0.036	0.036	0.035	0.035	0.034	0.034	0.033
7.0	0.042	0.043	0.045	0.044	0.043	0.042	0.041	0.040	0.039	0.038	0.038	0.037	0.036	0.036	0.035	0.035	0.034	0.034	0.033
7.5	0.041	0.043	0.044	0.043	0.042	0.041	0.040	0.039	0.039	0.038	0.037	0.037	0.036	0.035	0.035	0.034	0.034	0.034	0.033
8.0	0.040	0.042	0.044	0.043	0.042	0.041	0.040	0.039	0.038	0.038	0.037	0.036	0.036	0.035	0.035	0.034	0.034	0.033	0.033
8.5	0.040	0.042	0.043	0.042	0.041	0.040	0.040	0.039	0.038	0.037	0.037	0.036	0.036	0.035	0.035	0.034	0.034	0.033	0.033
9.0	0.039	0.041	0.043	0.042	0.041	0.040	0.039	0.039	0.038	0.037	0.037	0.036	0.035	0.035	0.034	0.034	0.034	0.033	0.033
9.5	0.039	0.041	0.042	0.041	0.040	0.040	0.039	0.038	0.038	0.037	0.036	0.036	0.035	0.035	0.034	0.034	0.033	0.033	0.033
10.0	0.038	0.040	0.042	0.041	0.040	0.039	0.039	0.038	0.037	0.037	0.036	0.036	0.035	0.035	0.034	0.034	0.033	0.033	0.032
10.5	0.038	0.040	0.041	0.040	0.040	0.039	0.038	0.038	0.037	0.036	0.036	0.035	0.035	0.034	0.034	0.034	0.033	0.033	0.032
11.0	0.037	0.039	0.041	0.040	0.039	0.039	0.038	0.037	0.037	0.036	0.036	0.035	0.035	0.034	0.034	0.033	0.033	0.033	0.032
11.5	0.037	0.039	0.040	0.040	0.039	0.038	0.038	0.037	0.036	0.036	0.035	0.035	0.035	0.034	0.034	0.033	0.033	0.032	0.032
12.0	0.036	0.038	0.040	0.039	0.039	0.038	0.037	0.037	0.036	0.036	0.035	0.035	0.034	0.034	0.033	0.033	0.033	0.032	0.032
12.5	0.036	0.038	0.040	0.039	0.038	0.038	0.037	0.037	0.036	0.035	0.035	0.035	0.034	0.034	0.033	0.033	0.033	0.032	0.032
13.0	0.036	0.037	0.039	0.039	0.038	0.037	0.037	0.036	0.036	0.035	0.035	0.034	0.034	0.034	0.033	0.033	0.032	0.032	0.032
13.5	0.035	0.037	0.039	0.038	0.038	0.037	0.037	0.036	0.036	0.035	0.035	0.034	0.034	0.033	0.033	0.033	0.032	0.032	0.032
14.0	0.035	0.037	0.038	0.038	0.037	0.037	0.036	0.036	0.035	0.035	0.034	0.034	0.034	0.033	0.033	0.032	0.032	0.032	0.031
14.5	0.034	0.036	0.038	0.038	0.037	0.036	0.036	0.036	0.035	0.035	0.034	0.034	0.033	0.033	0.033	0.032	0.032	0.032	0.031
15.0	0.034	0.036	0.038	0.037	0.037	0.036	0.036	0.035	0.035	0.034	0.034	0.034	0.033	0.033	0.033	0.032	0.032	0.032	0.031
15.5	0.034	0.036	0.037	0.037	0.036	0.036	0.035	0.035	0.035	0.034	0.034	0.033	0.033	0.033	0.032	0.032	0.032	0.031	0.031
16.0	0.033	0.035	0.037	0.037	0.036	0.036	0.035	0.035	0.034	0.034	0.034	0.033	0.033	0.033	0.032	0.032	0.032	0.031	0.031

NOTES:

1. Use of the Alternate Method of Modeling Box Culverts with Fish Baffles requires approval from the Bureau of Project Delivery, Highway Delivery Division, Highway Design and Technology Section, Hydrology and Hydraulics Unit.
2. Manning's n values for standard baffle configuration in culvert on slope as per BD-632M. For other baffle configurations, see reference in Note 2.
3. n-values calculated based on methodology in Design Considerations and Calculations for Fishways through a Box Culvert by Fred F. M. Chang and Jerome M. Norman (Sept. 1976, FHWA).
4. Above n values assume full flow.
5. n-values are for the entire culvert, bottom, top, and sides.

TABLE 10.11.2 (METRIC)
MANNING'S "n" VALUES FOR ALTERNATE METHOD OF MODELING BOX CULVERTS WITH FISH BAFFLES AND SLOPE ≤ 4%

RISE OF CULVERT (ft)	SPAN OF CULVERT (ft)																		
	1800	2100	2400	2700	3000	3300	3600	3900	4200	4500	4800	5100	5400	5700	6000	6300	6600	6900	7200
1200	0.034	0.035	0.035	0.034	0.033	0.032	0.032	0.031	0.030	0.029	0.029	0.028	0.028	0.027	0.027	0.026	0.026	0.026	0.025
1350	0.033	0.034	0.035	0.034	0.033	0.032	0.031	0.031	0.030	0.029	0.029	0.028	0.028	0.027	0.027	0.026	0.026	0.026	0.025
1500	0.033	0.034	0.035	0.034	0.033	0.032	0.031	0.030	0.030	0.029	0.029	0.028	0.028	0.027	0.027	0.026	0.026	0.026	0.025
1650	0.032	0.033	0.034	0.033	0.032	0.032	0.031	0.030	0.030	0.029	0.028	0.028	0.027	0.027	0.027	0.026	0.026	0.026	0.025
1800	0.032	0.033	0.034	0.033	0.032	0.031	0.031	0.030	0.029	0.029	0.028	0.028	0.027	0.027	0.027	0.026	0.026	0.025	0.025
1950	0.031	0.032	0.033	0.032	0.032	0.031	0.030	0.030	0.029	0.029	0.028	0.028	0.027	0.027	0.026	0.026	0.026	0.025	0.025
2100	0.031	0.032	0.033	0.032	0.031	0.031	0.030	0.029	0.029	0.028	0.028	0.028	0.027	0.027	0.026	0.026	0.026	0.025	0.025
2250	0.030	0.031	0.032	0.032	0.031	0.030	0.030	0.029	0.029	0.028	0.028	0.027	0.027	0.027	0.026	0.026	0.026	0.025	0.025
2400	0.030	0.031	0.032	0.031	0.031	0.030	0.030	0.029	0.029	0.028	0.028	0.027	0.027	0.027	0.026	0.026	0.026	0.025	0.025
2550	0.029	0.031	0.032	0.031	0.030	0.030	0.029	0.029	0.028	0.028	0.028	0.027	0.027	0.026	0.026	0.026	0.025	0.025	0.025
2700	0.029	0.030	0.031	0.031	0.030	0.030	0.029	0.029	0.028	0.028	0.027	0.027	0.027	0.026	0.026	0.026	0.025	0.025	0.025
2850	0.029	0.030	0.031	0.030	0.030	0.029	0.029	0.028	0.028	0.028	0.027	0.027	0.026	0.026	0.026	0.026	0.025	0.025	0.025
3000	0.028	0.030	0.031	0.030	0.030	0.029	0.029	0.028	0.028	0.027	0.027	0.027	0.026	0.026	0.026	0.025	0.025	0.025	0.025
3150	0.028	0.029	0.030	0.030	0.029	0.029	0.028	0.028	0.028	0.027	0.027	0.027	0.026	0.026	0.026	0.025	0.025	0.025	0.025
3300	0.028	0.029	0.030	0.030	0.029	0.029	0.028	0.028	0.027	0.027	0.027	0.026	0.026	0.026	0.026	0.025	0.025	0.025	0.025
3450	0.027	0.029	0.030	0.029	0.029	0.028	0.028	0.028	0.027	0.027	0.027	0.026	0.026	0.026	0.025	0.025	0.025	0.025	0.024
3600	0.027	0.028	0.030	0.029	0.029	0.028	0.028	0.028	0.027	0.027	0.026	0.026	0.026	0.026	0.025	0.025	0.025	0.025	0.024
3750	0.027	0.028	0.029	0.029	0.028	0.028	0.028	0.027	0.027	0.027	0.026	0.026	0.026	0.025	0.025	0.025	0.025	0.025	0.024
3900	0.027	0.028	0.029	0.029	0.028	0.028	0.028	0.027	0.027	0.027	0.026	0.026	0.026	0.025	0.025	0.025	0.025	0.024	0.024
4050	0.026	0.028	0.029	0.028	0.028	0.028	0.027	0.027	0.027	0.026	0.026	0.026	0.026	0.025	0.025	0.025	0.025	0.024	0.024
4200	0.026	0.027	0.029	0.028	0.028	0.027	0.027	0.027	0.027	0.026	0.026	0.026	0.025	0.025	0.025	0.025	0.024	0.024	0.024
4350	0.026	0.027	0.028	0.028	0.028	0.027	0.027	0.027	0.026	0.026	0.026	0.026	0.025	0.025	0.025	0.025	0.024	0.024	0.024
4500	0.026	0.027	0.028	0.028	0.027	0.027	0.027	0.027	0.026	0.026	0.026	0.025	0.025	0.025	0.025	0.025	0.024	0.024	0.024
4650	0.025	0.027	0.028	0.028	0.027	0.027	0.027	0.026	0.026	0.026	0.026	0.025	0.025	0.025	0.025	0.024	0.024	0.024	0.024
4800	0.025	0.027	0.028	0.027	0.027	0.027	0.026	0.026	0.026	0.026	0.025	0.025	0.025	0.025	0.025	0.024	0.024	0.024	0.024

NOTES:

1. Use of the Alternate Method of Modeling Box Culverts with Fish Baffles requires approval from the Bureau of Project Delivery, Highway Delivery Division, Highway Design and Technology Section, Hydrology and Hydraulics Unit.
2. Manning's n values for standard baffle configuration in culvert on slope as per BD-632M. For other baffle configurations, see reference in Note 2.
3. n-values calculated based on methodology in Design Considerations and Calculations for Fishways through a Box Culvert by Fred F. M. Chang and Jerome M. Norman (Sept. 1976, FHWA).
4. Above n values assume full flow.
5. n-values are for the entire culvert, bottom, top, and sides.

TABLE 10.11.2 (ENGLISH)
MANNING'S "n" VALUES FOR ALTERNATE METHOD OF MODELING BOX CULVERTS WITH FISH BAFFLES AND SLOPE ≤ 4%

RISE OF CULVERT (ft)	SPAN OF CULVERT (ft)																		
	6	7	8	9	10	11	12	13	14	15	16	17	18	19	20	21	22	23	24
4.0	0.034	0.035	0.035	0.034	0.033	0.032	0.032	0.031	0.030	0.029	0.029	0.028	0.028	0.027	0.027	0.026	0.026	0.026	0.025
4.5	0.033	0.034	0.035	0.034	0.033	0.032	0.031	0.031	0.030	0.029	0.029	0.028	0.028	0.027	0.027	0.026	0.026	0.026	0.025
5.0	0.033	0.034	0.035	0.034	0.033	0.032	0.031	0.030	0.030	0.029	0.029	0.028	0.028	0.027	0.027	0.026	0.026	0.026	0.025
5.5	0.032	0.033	0.034	0.033	0.032	0.032	0.031	0.030	0.030	0.029	0.028	0.028	0.027	0.027	0.027	0.026	0.026	0.026	0.025
6.0	0.032	0.033	0.034	0.033	0.032	0.031	0.031	0.030	0.029	0.029	0.028	0.028	0.027	0.027	0.027	0.026	0.026	0.025	0.025
6.5	0.031	0.032	0.033	0.032	0.032	0.031	0.030	0.030	0.029	0.029	0.028	0.028	0.027	0.027	0.026	0.026	0.026	0.025	0.025
7.0	0.031	0.032	0.033	0.032	0.031	0.031	0.030	0.029	0.029	0.028	0.028	0.028	0.027	0.027	0.026	0.026	0.026	0.025	0.025
7.5	0.030	0.031	0.032	0.032	0.031	0.030	0.030	0.029	0.029	0.028	0.028	0.027	0.027	0.027	0.026	0.026	0.026	0.025	0.025
8.0	0.030	0.031	0.032	0.031	0.031	0.030	0.030	0.029	0.029	0.028	0.028	0.027	0.027	0.027	0.026	0.026	0.026	0.025	0.025
8.5	0.029	0.031	0.032	0.031	0.030	0.030	0.029	0.029	0.028	0.028	0.028	0.027	0.027	0.026	0.026	0.026	0.025	0.025	0.025
9.0	0.029	0.030	0.031	0.031	0.030	0.030	0.029	0.029	0.028	0.028	0.027	0.027	0.027	0.026	0.026	0.026	0.025	0.025	0.025
9.5	0.029	0.030	0.031	0.030	0.030	0.029	0.029	0.028	0.028	0.028	0.027	0.027	0.026	0.026	0.026	0.026	0.025	0.025	0.025
10.0	0.028	0.030	0.031	0.030	0.030	0.029	0.029	0.028	0.028	0.027	0.027	0.027	0.026	0.026	0.026	0.025	0.025	0.025	0.025
10.5	0.028	0.029	0.030	0.030	0.029	0.029	0.028	0.028	0.028	0.027	0.027	0.027	0.026	0.026	0.026	0.025	0.025	0.025	0.025
11.0	0.028	0.029	0.030	0.030	0.029	0.029	0.028	0.028	0.027	0.027	0.027	0.026	0.026	0.026	0.026	0.025	0.025	0.025	0.025
11.5	0.027	0.029	0.030	0.029	0.029	0.028	0.028	0.028	0.027	0.027	0.027	0.026	0.026	0.026	0.025	0.025	0.025	0.025	0.024
12.0	0.027	0.028	0.030	0.029	0.029	0.028	0.028	0.028	0.027	0.027	0.026	0.026	0.026	0.026	0.025	0.025	0.025	0.025	0.024
12.5	0.027	0.028	0.029	0.029	0.028	0.028	0.028	0.027	0.027	0.027	0.026	0.026	0.026	0.025	0.025	0.025	0.025	0.025	0.024
13.0	0.027	0.028	0.029	0.029	0.028	0.028	0.028	0.027	0.027	0.027	0.026	0.026	0.026	0.025	0.025	0.025	0.025	0.024	0.024
13.5	0.026	0.028	0.029	0.028	0.028	0.028	0.027	0.027	0.027	0.026	0.026	0.026	0.026	0.025	0.025	0.025	0.025	0.024	0.024
14.0	0.026	0.027	0.029	0.028	0.028	0.027	0.027	0.027	0.027	0.026	0.026	0.026	0.025	0.025	0.025	0.025	0.024	0.024	0.024
14.5	0.026	0.027	0.028	0.028	0.028	0.027	0.027	0.027	0.026	0.026	0.026	0.026	0.025	0.025	0.025	0.025	0.024	0.024	0.024
15.0	0.026	0.027	0.028	0.028	0.027	0.027	0.027	0.027	0.026	0.026	0.026	0.025	0.025	0.025	0.025	0.025	0.024	0.024	0.024
15.5	0.025	0.027	0.028	0.028	0.027	0.027	0.027	0.026	0.026	0.026	0.026	0.025	0.025	0.025	0.025	0.024	0.024	0.024	0.024
16.0	0.025	0.027	0.028	0.027	0.027	0.027	0.026	0.026	0.026	0.026	0.025	0.025	0.025	0.025	0.025	0.024	0.024	0.024	0.024

NOTES:

1. Use of the Alternate Method of Modeling Box Culverts with Fish Baffles requires approval from the Bureau of Project Quality, Highway Delivery Division, Highway Design and Technology Section, Hydrology and Hydraulics Unit.
2. Manning's n values for standard baffle configuration in culvert on slope as per BD-632M. For other baffle configurations, see reference in Note 2.
3. n-values calculated based on methodology in Design Considerations and Calculations for Fishways through a Box Culvert by Fred F. M. Chang and Jerome M. Norman (Sept. 1976, FHWA).
4. Above n values assume full flow.
5. n-values are for the entire culvert, bottom, top, and sides.

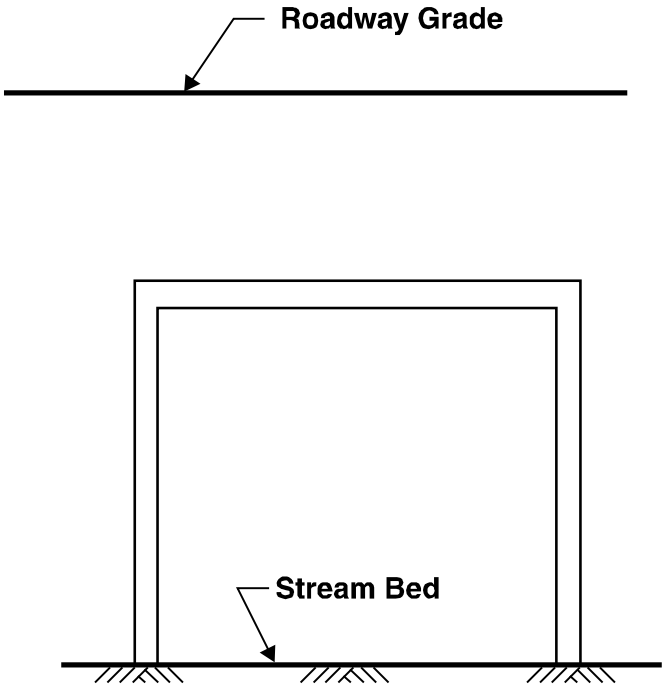

Cross Section
R C Frame Culvert

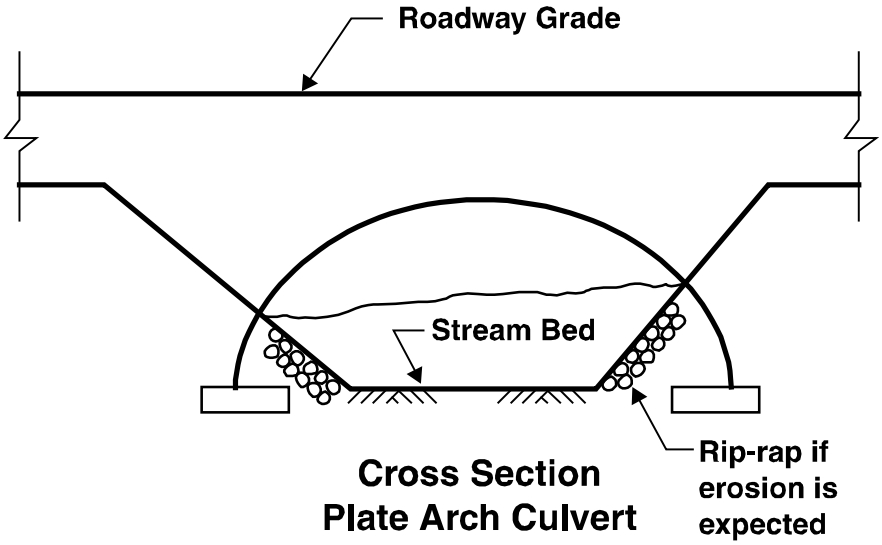

Cross Section
Plate Arch Culvert

FIGURE 10.11.3
Open Bottom Culverts

10.12 ABANDONED WATER SUPPLY SOURCES

All abandoned water supply sources, such as wells and springs, located within the proposed right-of-way shall be filled, removed, sealed and/or altered to prevent access or accidental injury and to prevent pollution of the ground water.

Wells or springs shall not be used to dispose of liquid or solid waste materials under any circumstances.

The Assistant District Executive for Design shall be consulted in justifying decisions reached on the handling of abandoned water supply sources or when pulling the casing may be undesirable or unfeasible.

The location of all water supplies within the project right-of-way shall be shown on the Right-of-Way Plans.

A. Standard Special Provisions. The Department's Standard Special Provision (SSP), "Section 214 - Sealing Abandoned Water Wells and Springs," provides guidance in developing specifications for sealing abandoned water wells and springs. This SSP is found in ECMS's menu "Construction Projects" under "Resources", then "Special Provisions". Select "Advanced Search", and then choose the Section Related Index and Active Status. The Section Related Index addresses Section related issues that are no longer contained in Publication 408, *Specifications*. It describes the materials involved, construction of drilled or driven wells, dug wells, or springs, and the measurement and payment.

This SSP should only be considered as proper abandonment for dug wells (Section 214.3(b)) and springs (Section 214.3(c)). Proper considerations for drilled or driven wells (Section 214.3(a)) are discussed in Section 10.12.B below.

B. Drilled or Driven Wells. Drilled or driven water supply wells that are encountered during roadway construction or maintenance activities may occur in a variety of situations (e.g., cavernous rock, multiple aquifers, artesian wells, unconfined or semi-confined aquifers, flowing wells, etc.). PA DEP's publication, *Groundwater Monitoring Guidance Manual,* Chapter 7, Well Abandonment Procedures, should be referenced for the proper abandonment of water supply wells that are drilled or driven (Chapter 10, Appendix E, Reference 10). This chapter in the manual includes a summary of well abandonment procedures (i.e., the use of casing seals, aggregate, sealants, bridge seals or plugs, and/or the cutting of ell casings). A standard Well Abandonment Form shall be sent to the Pennsylvania Department of Conservation and Natural Resources' Bureau of Topographic and Geologic Survey (Survey) at least 10 days before any well is decommissioned by sealing and/or filling activities.

The *Groundwater Monitoring Guidance Manual*, Chapter 7 identifies materials that are used during well abandonment procedures for sealing wells that have been drilled or driven, including wells that have been completed in multiple groundwater aquifers. These materials include aggregate, sealants (e.g., neat cement grout, concrete grout with associated additives (i.e., bentonite, calcium chloride), high-solids sodium bentonite, or chip bentonite), and bridge seals.

C. Dug Wells. Abandoned dug wells shall be filled completely with concrete and finished flush with the surface.

D. Springs. Springs shall be enclosed with satisfactory spring boxes and with suitable overflow pipes to collect and direct the flow to inlets or parallel ditches.

INTENTIONALLY BLANK

BLANK PAGE

CHAPTER 10, APPENDIX A

PROCEDURES FOR COORDINATING HIGHWAY ENCROACHMENTS ON FLOODPLAINS WITH THE FEDERAL EMERGENCY MANAGEMENT AGENCY (FEMA)

MEMORANDUM

·ocedures for Coordinating Highway
.ncroachments on Floodplains with the
Federal Emergency Management Agency
(FEMA)

JUN 25 1982

HNG-31

Associate Administrator for
Engineering and Operations
Washington, D.C. 20590

Regional Federal Highway
Administrators
Regions 1-10
Direct Federal Division Engineers

Attached are copies of the subject procedures and a letter from Mr. Richard W. Krimm of FEMA dated June 7, 1982. Mr. Krimm has endorsed the procedures and has distributed them to the field offices of FEMA. Please send copies of these procedures to the FHWA Divisions Offices and the States in your Region.

We believe these procedures provide excellent guidance in regard to meeting our responsibility to be consistent with the standards of the National Flood Insurance Program (NFIP) as set forth in the Federal-Aid Highway Program Manual (FHPM) 6-7-3-2, Location and Hydraulic Design of Encroachments ⌉ Flood Plains. The procedures establish some flexibility for achieving st-effective encroachments on floodplains within communities that are in ⌐ne NFIP. If an encroachment is proposed within an NFIP community, the economic consequences of alternatives can be assessed using the analysis procedures in Hydraulic Engineering Circular No. 17 (HEC 17), the Design of Encroachments on Floodplains Using Risk Analysis. This assessment/analysis can then be used, if needed, to support the community's application to FEMA for approval of an alternate floodway or a floodway revision. For all locations outside of NFIP communities or NFIP identified flood hazard areas, FHPM 6-7-3-2 shall be followed for encroachment design. This policy requires that encroachment designs be supported, as appropriate, by a risk assessment or risk analysis. Economic (risk) analysis, if appropriate, can be accomplished using the guidelines in HEC 17.

We encourage you to work with the States to implement these procedures as a part of Program Emphasis Area Number 2, Cost Effective Design and Construction. We are aware that some State environmental agencies have adopted strict requirements for encroachments on all floodplains, whether rural or urban in nature. These requirements allow the highway designer little discretion to achieve cost-effective designs. In such cases, this subject should be discussed with appropriate State personnel so that practicable State floodplain encroachment requirements can be developed. Implementation of these procedures, along with the economic (risk) assessment/analysis design process required by FHPM 6-7-3-2, has a high potential for achieving significant cost savings in the Federal-aid Highway Program.

/s/
R. D. Morgan

Attachments

Federal Emergency Management Agency

Washington, D.C. 20472

7 JUN 1982

Mr. R. D. Morgan
Associate Administrator for Engineering
And Traffic Operations
Federal Highway Administration
Department of Transportation
Washingtin, D.C. 20590

Dear Mr. Morgan:

This is in response to your letter of May 3 1982, seeking our endorsement of the procedure paper entitled "procedures for Coordinating Highway Encroachments on Floodplains with FEMA." This paper expands upon my internal policy memorandum of December 29, 1981, concerning the Federal Emergency Management Agency's (FEMA's) handling of highway encroachments within regulatory floodways. Your expansion addresses highway agency responsibilities for coordination with FEMA under various situations in which FEMA has identified flood plains, floodways and base flood elevations.

We have reviewed your procedure paper and believe that it provides an excellent Guideline for coordination between highway agencies, communities participating in the National Flood Insurance Program (NFIP) and FEMA, when flood plain encroachments involving highway construction are proposed. In accordance with Executive Order 11988, the procedures require compliance with NFIP standards and regulations, where practicable, but also provide for responsible actions where no practicable alternative can be identified. These actions include appropriate compensation to affected property owners, assurance that the NFIP will not incur additional liability due to increased flood hazards, and the provision of appropriate technical data to FEMA so that flood insurance maps and studies can be revised as necessary.

We compliment you on your efforts to establish workable operating procedures which incorporate coordination with FEMA on site specific projects. We believe that this procedure paper will facilitate the attainment of our mutual objective of future flood loss reduction. We will provide copies of the paper, with our endorsement to our Regional Offices.

Sincerely,

/S/
Richard W. Krimm
Assistant Associate Director
Office of Natural and Technological
Hazards Programs

Procedures for Coordinating Highway Encroachments on Floodplains with Federal Emergency Management Agency (FEMA)

The local community with land use jurisdiction, whether it is a city, county, or State, has the responsibility for enforcing National Flood Insurance program (NFIP) regulations in that community if the community is participating in the NFIP. Most NFIP communities have established a permit requirement for all development within the base (100 year) floodplain. Consistency with NFIP standards is a requirement for Federal-aid highway actions involving regulatory floodways. The community, by necessity, is the one who must submit proposals to FEMA for amendments to NFIP ordinances and maps in that community should it be necessary. Determination of the status of a community's participation in the NFIP and review of applicable NFIP maps and ordinances are, therefore, essential first steps in conducting location hydraulic studies and preparing environmental documents.

Where NFIP maps are available, their use is mandatory in determining whether a highway location alternative will include an encroachment on the base floodplain. Three types of NFIP maps are published: (1) a Flood Hazard Boundary Map (FHBM), (2) a Flood Boundary and Floodway Map (FBFM), and a Flood Insurance Rate Map (FIRM). A FHBM is generally not based on a detailed hydraulic study and, therefore, the floodplain boundaries shown are approximate. A FBFM, on the other hand, is generally derived from a detailed hydraulic study and should provide reasonably accurate information. The hydraulic data from which the FBFM was derived is available through the regional office FEMA. This is normally in the form of computer input data cards for calculating water surface profiles. The FIRM is generally produced at the same time using the same hydraulic model and has appropriate rate zones and base flood elevations added.

Communities in the regular program of the NFIP [illegible] have had detailed flood insurance studies performed. In these communities the NFIP map will be a FIRM and in the majority of cases, a regulatory floodway is in effect.

Communities in the emergency program of the NFIP usually have not had a detailed flood insurance study completed and, usually, only limited floodplain data is available. In this case the community NFIP map will be a FHBM and there will not be a regulatory floodway.

Other possibilities are: (1) the community is not in a FEMA identified flood hazard area and thus there is no NFIP map, (2) a FHBM, FIRM, or FBFM is available but the community is not participating in the NFIP, (3) a community is in the process of converting from the emergency program to the regular program and a detailed flood insurance study is underway, or (4) a community is participating in the regular program, the NFIP map is a FIRM, but no regulatory floodway has been established. Information on community participation in the NFIP is provided in the "National Flood Insurance Program Community Status Book" which is published bimonthly for each State and is available through the Headquarters of FEMA.

Coordination With FEMA

It is intended that there should be highway agency coordination with FEMA in situations where administrative determinations are needed involving a regulatory floodway or where flood risks in NFIP communities are significantly impacted. The circumstances which would ordinarily require coordination with FEMA are:

1. a proposed crossing encroaches on a regulatory floodway and, as such, would require an amendment to the floodway map,

2. a proposed crossing encroaches on a floodplain where a detailed study has been performed but no floodway designated and the maximum 1 foot increase in the base flood elevation would be exceeded,

3. a local community is expected to enter into the regular program within a reasonable period and detailed floodplain studies are underway,

4. a local community is participating in the emergency program and base flood elevation in the vicinity of insurable buildings is increased by more than 1 foot. (Where insurable buildings are not affected, it is sufficient to notify FEMA of changes to base flood elevations as a result of highway construction.)

The draft EIS/EA should indicate the NFIP status of affected communities, the encroachments anticipated and the need for floodway or floodplain ordinance amendments. Coordination means furnishing to FEMA the draft EIS/EA and, upon selection of an alternative, furnishing to FEMA through the community a preliminary site plan and water surface elevation information and technical data in support of a floodway revision request as required. If a determination by FEMA would influence the selection of an alternative, a commitment from FEMA should be obtained prior to the FEIS or FONSI. Otherwise this later coordination may be postponed until the design phase.

For projects that will be processed with a categorical exclusion, coordination may be carried out during design. However, the outcome of the coordination at this time could change the class of environmental processing.

Highway Encroachments Which Are Consistent With Regulatory Floodways In Effect

In many situations it is possible to design and construct highways in a cost-effective manner such that their components are excluded from the floodway. This is the simplest way to be consistent with the standards and should be the initial alternative evaluated. If a project element encroaches on the floodway but has a very minor effect on the floodway water surface elevation (such as piers in the floodway), the project may normally be considered as being consistent with the standards if hydraulic conditions can be improved so that no water surface elevation increase is reflected in the computer printout for the new conditions.

Revision of Regulatory Floodway So That Highway Encroachment Would Be Consistent

Where it is not cost-effective to design a highway crossing to avoid encroachment on an established floodway, a second alternative would be a modification of the floodway itself. Often, the community will be willing to accept an alternative floodway configuration to accommodate a proposed crossing provided NFIP limitations on increases in the base flood elevation are not exceeded. This approach is useful where the highway crossing does not cause more than a 1 foot rise in the base flood elevation. In some cases, it may be possible to enlarge the floodway or otherwise increase conveyance in the floodway above and below the crossing in order to allow greater encroachment. Such planning is best accomplished when the floodway is first established. However, where the community is willing to amend an established floodway to support this option, the floodway may be revised.

The responsibility for demonstrating that an alternative floodway configuration meets NFIP requirements rests with the community. However, this responsibility may be borne by the agency proposing to construct the highway crossing. Floodway revisions must be based on the hydraulic model which was used to develop the currently effective floodway but updated to reflect existing encroachment conditions. This will allow determination of the increase in the base flood elevation that has been caused by encroachments since the original floodway was established. Alternate floodway configurations may then be analyzed.

Base flood elevation increases are referenced to the profile obtained for existing conditions when the floodway was first established.

Data submitted to FEMA in support of a floodway revision request should include:

1. Copy of current regulatory Flood Boundary Floodway Map, showing existing conditions, proposed highway crossing and revised floodway limits.

2. Copy of computer printouts (input, computation, and output) for the current 100-year model and current 100-year floodway model.

3. Copy of computer printouts (input, computation, and output) for the revised 100-year floodway model. Any fill or development that has occurred in the existing flood fringe area must be incorporated into the revised 100-year floodway model.

4. Copy of engineering certification is required for work performed by private subcontractors.

The revised and current computer data required above should extend far enough upstream and downstream of the floodway revision area in order to tie back into the original floodway and profiles using sound hydraulic engineering practices. This distance will vary depending on the magnitude of the requested floodway revision and the hydraulic characteristics of the stream.

A floodway revision will not be acceptable if development that has occurred in the existing flood fringe area since the adoption of the community's floodway ordinance will now be located within the revised floodway area unless adversely affected adjacent property owners are compensated for the loss.

If the input data representing the original hydraulic model is unavailable, an approximation should be developed. A new model should be established using the original cross-section topographic information, where possible, and the discharges contained in the Flood Insurance Study which establish the original floodway. The model should then be run confining the effective flow area to the currently established floodway and calibrate to reproduce within 0.10 foot, the "With Floodway" elevations provided in the Floodway Data Table for the current floodway. Floodway revisions may then be evaluated using the procedures outlined above.

Floodway Encroachment Where Demonstrably Appropriate

When it would be demonstrably inappropriate to design a highway crossing to avoid encroachment on the floodway and where the floodway cannot be modifed such that the structure could be excluded, FEMA will approve an alternate floodway with backwater in excess of the 1 foot maximum only when the following conditions have been met:

1. A location hydraulic study has been performed in accordance with Federal-Aid Highway Program Manual (FHPM) 6-7-3-2 "Location and Hydraulic Design of Encroachments on Floodplains" (23 CFR 650, Subpart A) and FHWA finds the encroachment is the only practicable alt[illegible]

2. The constructing agency has made appropriate arrangements with affected property owners and the community to obtain flooding easements or otherwise compensate them for future flood losses due to the effects of the structure.

3. The constructing agency has made appropriate arrangements to assure that the National Flood Insurance Program and Flood Insurance Fund do not incur any liability for additional future flood losses to existing structures which are insured under the Program and grandfathered in under the risk status existing prior to the construction of the structure.

4. Prior to initiating construction, the constructing agency provides FEMA with revised flood profiles, floodway and floodplain mapping, and background technical data necessary for FEMA to issue revised Flood Insurance Rate Maps and Flood Boundary and Floodway Maps for the affected area upon completion of the structure.

Highway Encroachment On A Floodplain With A Detailed Study (FIRM)

In communities where a detailed flood insurance study has been performed but no regulatory floodway designated, the highway crossing should be designed to allow no more than a 1 foot increase in the base flood elevation based on technical data from the flood insurance study. Technical data supporting the increased flood elevation should be submitted to the local community and FEMA for their files. Where it is demonstrably inappropriate to design the highway crossing and meet backwater limitations the procedures outlined under

Floodway Encroachment Where Demonstrably Appropriate should be followed in requesting a revision of base floodplain reference elevations.

Highway Encroachment On A Floodplain Indicated On An FHBM

In communities where detailed flood insurance studies have not been performed, the highway agency must generate its own technical data to determine the base floodplain elevation and design encroachments in accordance with FHPM 6-7-3-2. Base floodplain elevations should be furnished to the community, and coordination carried out with FEMA as outlined previously where the increase in base flood elevations in the vicinity of insurable buildings exceeds 1 foot.

Highway Encroachment On Unidentified Floodplains

Encroachments which are outside of NFIP communities or NFIP identified flood hazard areas should be designed in accordance with FHPM 6-7-3-2 of the Federal Highway Administration. The NFIP identified flood hazard areas are those delineated on an FHBM, FBFM or FIRM.

To Obtain FEMA Publications

1. National Flood Insurance Program Community Status Book

Write to FEMA, 500 "C" Street, SW., Room 431, Insurance Operations, Washington, D.C. 20472 and request to be placed on the appropriate State mailing list.

2. Flood Insurance Study Report and/or FBFM

Write to FEMA, 500 "C" Street, SW., State and Local Programs Room 418, Washington, D.C. 20472 request:

(a) For future studies,

To be placed on mailing list to receive all studies and maps as they are completed for a State.

(b) For completed studies,

(1) The study for a particular community (provide number).

(2) All the studies for a particular State. You will received about 50 percent of the completed studies to date.

3. FHBM or FIRM for a particular community with ID number,

(a) call NFIP contractor (800)638-6620, (800)492-6605(MD), 897-5900 in D.C., or

(b) write NFIP, P.O. Box 34604, Bethesda, Maryland 20034

CHAPTER 10, APPENDIX B

FILL HEIGHT TABLES
FOR PIPES AND PIPE ARCHES

TABLE 10.B.1 (METRIC)
TABLE OF CONTENTS - FILL HEIGHT TABLES INCLUDED IN BD-636M FOR REINFORCED CONCRETE PIPES AND ELLIPTICAL PIPES

TYPE	DESIGN LIFE (years)	PIPE INSTALLATION PROCEDURE	PIPE SIZES (mm)	SHEET NO. IN BD-636M
A	100	Standard	300 thru 3000	4 of 18
B	50	Standard	300 thru 1200	6 of 18
A	100	Shoring/Trench Box	300 thru 3000	7 of 18
B	50	Shoring/Trench Box	300 thru 1200	7 of 18
A (Horiz Ellip Pipe)	100	Standard	365 × 575 thru 2440 × 3840	8 of 18
B (Horiz Ellip Pipe)	50	Standard	365 × 575 thru 2440 × 3840	8 of 18
A (Vert Ellip Pipe)	100	Shoring/Trench Box	1150 × 730 thru 3840 × 2440	9 of 18
A (Horiz Ellip Pipe)	100	Shoring/Trench Box	365 × 575 thru 2440 × 3840	9 of 18
B (Vert Ellip Pipe)	50	Shoring/Trench Box	1150 × 730 thru 3840 × 2440	10 of 18
B (Horiz Ellip Pipe)	50	Shoring/Trench Box	365 × 575 thru 2440 × 3840	10 of 18

TABLE 10.B.1 (ENGLISH)
TABLE OF CONTENTS - FILL HEIGHT TABLES INCLUDED IN BD-636M FOR REINFORCED CONCRETE PIPES AND ELLIPTICAL PIPES

TYPE	DESIGN LIFE (years)	PIPE INSTALLATION PROCEDURE	PIPE SIZES (in)	SHEET NO. IN BD-636M
A	100	Standard	12 thru 120	12 of 18
B	50	Standard	12 thru 48	14 of 18
A	100	Shoring/Trench Box	12 thru 120	15 of 18
B	50	Shoring/Trench Box	12 thru 48	15 of 18
A (Horiz Ellip Pipe)	100	Standard	14 × 23 thru 97 × 151	16 of 18
B (Horiz Ellip Pipe)	50	Standard	14 × 23 thru 97 × 151	16 of 18
A (Vert Ellip Pipe)	100	Shoring/Trench Box	45 × 29 thru 97 × 151	17 of 18
A (Horiz Ellip Pipe)	100	Shoring/Trench Box	14 × 23 thru 151 × 97	17 of 18
B (Vert Ellip Pipe)	50	Shoring/Trench Box	45 × 29 thru 151 × 97	18 of 18
B (Horiz Ellip Pipe)	50	Shoring/Trench Box	14 × 23 thru 97 × 151	18 of 18

TABLE 10.B.2 (METRIC)
TABLE OF CONTENTS - ALLOWABLE FILL HEIGHTS FOR METAL PIPES AND PIPE ARCHES

TYPE	CORRUGATIONS (mm)	TREATMENT	DESIGN LIFE		
			25 yr	50 yr	100 yr
Galvanized Steel Pipe	68 × 13	None	X	X	
Galvanized Steel Pipe	75 × 25	None	X	X	
Galvanized Steel Pipe	125 × 25	None	X	X	
Aluminized Steel Pipe	68 × 13	None	X	X	X
Aluminized Steel Pipe	75 × 25	None	X	X	X
Aluminized Steel Pipe	125 × 25	None	X	X	X
Galvanized Steel Pipe	68 × 13	Polymer Coating (≤ 1.5 m/s)	X	X	X
Galvanized Steel Pipe	75 × 25	Polymer Coating (≤ 1.5 m/s)	X	X	X
Galvanized Steel Pipe	125 × 25	Polymer Coating (≤ 1.5 m/s)	X	X	X
Galvanized Steel Pipe	68 × 13	Polymer Coating (> 1.5 m/s)	X	X	
Galvanized Steel Pipe	75 × 25	Polymer Coating (> 1.5 m/s)	X	X	
Galvanized Steel Pipe	125 × 25	Polymer Coating (> 1.5 m/s)	X	X	
Aluminum Pipe	68 × 13	None	X	X	X
Aluminum Pipe	75 × 25	None	X	X	X
Galvanized Steel Pipe Arch	68 × 13	None	X	X	
Galvanized Steel Pipe Arch	75 × 25	None	X	X	
Galvanized Steel Pipe Arch	125 × 25	None	X	X	
Aluminized Steel Pipe Arch	68 × 13	None	X	X	X
Aluminized Steel Pipe Arch	75 × 25	None	X	X	X
Aluminized Steel Pipe Arch	125 × 25	None	X	X	X
Galvanized Steel Pipe Arch	68 × 13	Polymer Coating (≤ 1.5 m/s)	X	X	
Galvanized Steel Pipe Arch	75 × 25	Polymer Coating (≤ 1.5 m/s)	X	X	
Galvanized Steel Pipe Arch	125 × 25	Polymer Coating (≤ 1.5 m/s)	X	X	
Galvanized Steel Pipe Arch	68 × 13	Polymer Coating (> 1.5 m/s)	X	X	
Galvanized Steel Pipe Arch	75 × 25	Polymer Coating (> 1.5 m/s)	X	X	
Galvanized Steel Pipe Arch	125 × 25	Polymer Coating (> 1.5 m/s)	X	X	
Aluminum Pipe Arch	68 × 13	None	X	X	X
Aluminum Pipe Arch	75 × 25	None	X	X	X
Aluminized Steel Pipe	19 × 19 × 190	None	X	X	X
Aluminum Pipe	19 × 19 × 190	None	X	X	X
Aluminized Steel Pipe Arch	19 × 19 × 190	None	X	X	X
Aluminum Pipe Arch	19 × 19 × 190	None	X	X	X

TABLE 10.B.2 (ENGLISH)
TABLE OF CONTENTS - ALLOWABLE FILL HEIGHTS FOR METAL PIPES AND PIPE ARCHES

TYPE	CORRUGATIONS (in)	TREATMENT	DESIGN LIFE		
			25 yr	50 yr	100 yr
Galvanized Steel Pipe	2 2/3 × 1/2	None	X	X	
Galvanized Steel Pipe	3 × 1	None	X	X	
Galvanized Steel Pipe	5 × 1	None	X	X	
Aluminized Steel Pipe	2 2/3 × 1/2	None	X	X	X
Aluminized Steel Pipe	3 × 1	None	X	X	X
Aluminized Steel Pipe	5 × 1	None	X	X	X
Galvanized Steel Pipe	2 2/3 × 1/2	Polymer Coating (≤ 5.0 ft/s)	X	X	X
Galvanized Steel Pipe	3 × 1	Polymer Coating (≤ 5.0 ft/s)	X	X	X
Galvanized Steel Pipe	5 × 1	Polymer Coating (≤ 5.0 ft/s)	X	X	X
Galvanized Steel Pipe	2 2/3 × 1/2	Polymer Coating (> 5.0 ft/s)	X	X	
Galvanized Steel Pipe	3 × 1	Polymer Coating (> 5.0 ft/s)	X	X	
Galvanized Steel Pipe	5 × 1	Polymer Coating (> 5.0 ft/s)	X	X	
Aluminum Pipe	2 2/3 × 1/2	None	X	X	X
Aluminum Pipe	3 × 1	None	X	X	X
Galvanized Steel Pipe Arch	2 2/3 × 1/2	None	X	X	
Galvanized Steel Pipe Arch	3 × 1	None	X	X	
Galvanized Steel Pipe Arch	5 × 1	None	X	X	
Aluminized Steel Pipe Arch	2 2/3 × 1/2	None	X	X	X
Aluminized Steel Pipe Arch	3 × 1	None	X	X	X
Aluminized Steel Pipe Arch	5 × 1	None	X	X	X
Galvanized Steel Pipe Arch	2 2/3 × 1/2	Polymer Coating (≤ 5.0 ft/s)	X	X	
Galvanized Steel Pipe Arch	3 × 1	Polymer Coating (≤ 5.0 ft/s)	X	X	
Galvanized Steel Pipe Arch	5 × 1	Polymer Coating (≤ 5.0 ft/s)	X	X	
Galvanized Steel Pipe Arch	2 2/3 × 1/2	Polymer Coating (> 5.0 ft/s)	X	X	
Galvanized Steel Pipe Arch	3 × 1	Polymer Coating (> 5.0 ft/s)	X	X	
Galvanized Steel Pipe Arch	5 × 1	Polymer Coating (> 5.0 ft/s)	X	X	
Aluminum Pipe Arch	2 2/3 × 1/2	None	X	X	X
Aluminum Pipe Arch	3 × 1	None	X	X	X
Aluminized Steel Pipe	3/4 × 3/4 × 7 1/2	None	X	X	X
Aluminum Pipe	3/4 × 3/4 × 7 1/2	None	X	X	X
Aluminized Steel Pipe Arch	3/4 × 3/4 × 7 1/2	None	X	X	X
Aluminum Pipe Arch	3/4 × 3/4 × 7 1/2	None	X	X	X

TABLE 10.B.3 (METRIC)
ALLOWABLE FILL HEIGHTS FOR
CORRUGATED GALVANIZED STEEL PIPES
(68 mm × 13 mm CORRUGATIONS)

DESIGN LIFE - 25 YR										
PIPE DIAMETER (mm)	HEIGHTS OF FILL (m)									
	1.63 mm thickness		2.01 mm thickness		2.77 mm thickness		3.51 mm thickness		4.27 mm thickness	
	MIN	MAX	MIN	MAX	MIN	MAX	MIN	MAX	MIN	MAX
450	0.5	12.5	0.5	26.2	—	—	—	—	—	—
525	0.5	10.7	0.5	22.6	0.5	46.3	—	—	—	—
600	0.6	9.4	0.5	19.5	0.5	40.5	—	—	—	—
675	0.6	8.2	0.6	17.4	0.5	36.0	—	—	—	—
750	0.6	7.6	0.6	15.8	0.5	32.3	—	—	—	—
825	0.8	6.7	0.6	14.3	0.5	29.6	—	—	—	—
900	0.8	6.1	0.6	13.1	0.6	27.1	0.5	40.8	—	—
1050	0.8	5.5	0.8	11.3	0.6	23.2	0.6	35.1	0.5	43.9
1200	0.8	4.6	0.8	9.8	0.6	20.4	0.6	30.8	0.5	38.4
1350	—	—	0.8	8.8	0.8	18.0	0.6	27.4	0.6	34.1
1500	—	—	—	—	0.8	16.2	0.6	24.7	0.6	30.8
1650	—	—	—	—	—	—	0.8	22.3	0.6	28.0
1800	—	—	—	—	—	—	0.8	20.4	0.6	25.6
2100	—	—	—	—	—	—	—	—	0.8	19.8

DESIGN LIFE - 50 YR										
PIPE DIAMETER (mm)	HEIGHTS OF FILL (m)									
	1.63 mm thickness		2.01 mm thickness		2.77 mm thickness		3.51 mm thickness		4.27 mm thickness	
	MIN	MAX	MIN	MAX	MIN	MAX	MIN	MAX	MIN	MAX
525	—	—	—	—	0.5	7.0	—	—	—	—
600	—	—	—	—	0.5	6.1	—	—	—	—
675	—	—	—	—	0.5	5.5	—	—	—	—
750	—	—	—	—	0.5	4.9	—	—	—	—
825	—	—	—	—	0.5	4.6	—	—	—	—
900	—	—	—	—	0.6	4.3	0.5	17.7	—	—
1050	—	—	—	—	0.6	3.7	0.6	15.2	0.5	27.1
1200	—	—	—	—	0.8	3.0	0.6	13.4	0.5	23.8
1350	—	—	—	—	0.9	2.7	0.6	11.9	0.6	21.3
1500	—	—	—	—	1.1	2.4	0.6	10.7	0.6	19.2
1650	—	—	—	—	—	—	0.8	9.8	0.6	17.4
1800	—	—	—	—	—	—	0.8	8.8	0.6	15.8
2100	—	—	—	—	—	—	—	—	0.8	13.7

TABLE 10.B.3 (ENGLISH)
ALLOWABLE FILL HEIGHTS FOR
CORRUGATED GALVANIZED STEEL PIPES
(2 2/3 in × 1/2 in CORRUGATIONS)

DESIGN LIFE - 25 YR										
PIPE DIAMETER (in)	HEIGHTS OF FILL (ft)									
	16 Gage		14 Gage		12 Gage		10 Gage		8 Gage	
	MIN	MAX	MIN	MAX	MIN	MAX	MIN	MAX	MIN	MAX
18	1.5	41	1.5	86	—	—	—	—	—	—
21	1.5	35	1.5	74	1.5	152	—	—	—	—
24	2.0	31	1.5	64	1.5	133	—	—	—	—
27	2.0	27	2.0	57	1.5	118	—	—	—	—
30	2.0	25	2.0	52	1.5	106	—	—	—	—
33	2.5	22	2.0	47	1.5	97	—	—	—	—
36	2.5	20	2.0	43	2.0	89	1.5	134	—	—
42	2.5	18	2.5	37	2.0	76	2.0	115	1.5	144
48	2.5	15	2.5	32	2.0	67	2.0	101	1.5	126
54	—	—	2.5	29	2.5	59	2.0	90	2.0	112
60	—	—	—	—	2.5	53	2.0	81	2.0	101
66	—	—	—	—	—	—	2.5	73	2.0	92
72	—	—	—	—	—	—	2.5	67	2.0	84
84	—	—	—	—	—	—	—	—	2.5	65

DESIGN LIFE - 50 YR										
PIPE DIAMETER (in)	HEIGHTS OF FILL (ft)									
	16 Gage		14 Gage		12 Gage		10 Gage		8 Gage	
	MIN	MAX	MIN	MAX	MIN	MAX	MIN	MAX	MIN	MAX
21	—	—	—	—	1.5	23	—	—	—	—
24	—	—	—	—	1.5	20	—	—	—	—
27	—	—	—	—	1.5	18	—	—	—	—
30	—	—	—	—	1.5	16	—	—	—	—
33	—	—	—	—	1.5	15	—	—	—	—
36	—	—	—	—	2.0	14	1.5	58	—	—
42	—	—	—	—	2.0	12	2.0	50	1.5	89
48	—	—	—	—	2.5	10	2.0	44	1.5	78
54	—	—	—	—	3.0	9	2.0	39	2.0	70
60	—	—	—	—	3.5	8	2.0	35	2.0	63
66	—	—	—	—	—	—	2.5	32	2.0	57
72	—	—	—	—	—	—	2.5	29	2.0	52
84	—	—	—	—	—	—	—	—	2.5	45

TABLE 10.B.4 (METRIC)
ALLOWABLE FILL HEIGHTS FOR
CORRUGATED GALVANIZED STEEL PIPES
(75 mm × 25 mm CORRUGATIONS)

DESIGN LIFE - 25 YR										
PIPE DIAMETER (mm)	HEIGHTS OF FILL (m)									
	1.63 mm thickness		2.01 mm thickness		2.77 mm thickness		3.51 mm thickness		4.27 mm thickness	
	MIN	MAX	MIN	MAX	MIN	MAX	MIN	MAX	MIN	MAX
1350	0.8	4.9	0.6	10.1	0.6	20.7	0.5	31.4	0.5	39.3
1500	0.8	4.3	0.8	9.1	0.6	18.6	0.5	28.3	0.5	35.4
1650	0.8	4.0	0.8	8.2	0.6	17.1	0.6	25.6	0.5	32.3
1800	0.9	3.7	0.8	7.6	0.6	15.5	0.6	23.5	0.5	29.6
2100	0.9	3.0	0.8	6.4	0.8	13.4	0.6	20.1	0.6	25.3
2400	—	—	0.9	5.8	0.8	11.6	0.8	17.7	0.6	22.3

DESIGN LIFE - 50 YR										
PIPE DIAMETER (mm)	HEIGHTS OF FILL (m)									
	1.63 mm thickness		2.01 mm thickness		2.77 mm thickness		3.51 mm thickness		4.27 mm thickness	
	MIN	MAX	MIN	MAX	MIN	MAX	MIN	MAX	MIN	MAX
1350	—	—	—	—	0.8	3.0	0.5	13.7	0.5	24.4
1500	—	—	—	—	0.9	2.7	0.5	12.1	0.5	21.9
1650	—	—	—	—	0.9	2.1	0.6	11.0	0.5	20.1
1800	—	—	—	—	1.1	1.8	0.6	10.1	0.5	18.3
2100	—	—	—	—	—	—	0.6	8.8	0.6	15.8
2400	—	—	—	—	—	—	0.8	7.6	0.6	13.7

TABLE 10.B.4 (ENGLISH)
ALLOWABLE FILL HEIGHTS FOR
CORRUGATED GALVANIZED STEEL PIPES
(3 in × 1 in CORRUGATIONS)

DESIGN LIFE - 25 YR										
PIPE DIAMETER (in)	HEIGHTS OF FILL (ft)									
	16 Gage		14 Gage		12 Gage		10 Gage		8 Gage	
	MIN	MAX	MIN	MAX	MIN	MAX	MIN	MAX	MIN	MAX
54	2.5	16	2.0	33	2.0	68	1.5	103	1.5	129
60	2.5	14	2.5	30	2.0	61	1.5	93	1.5	116
66	2.5	13	2.5	27	2.0	56	2.0	84	1.5	106
72	3.0	12	2.5	25	2.0	51	2.0	77	1.5	97
84	3.0	10	2.5	21	2.5	44	2.0	66	2.0	83
96	—	—	3.0	19	2.5	38	2.5	58	2.0	73

DESIGN LIFE - 50 YR										
PIPE DIAMETER (in)	HEIGHTS OF FILL (ft)									
	16 Gage		14 Gage		12 Gage		10 Gage		8 Gage	
	MIN	MAX	MIN	MAX	MIN	MAX	MIN	MAX	MIN	MAX
54	—	—	—	—	2.5	10	1.5	45	1.5	80
60	—	—	—	—	3.0	9	1.5	40	1.5	72
66	—	—	—	—	3.0	7	2.0	36	1.5	66
72	—	—	—	—	3.5	6	2.0	33	1.5	60
84	—	—	—	—	—	—	2.0	29	2.0	52
96	—	—	—	—	—	—	2.5	25	2.0	45

TABLE 10.B.5 (METRIC)
ALLOWABLE FILL HEIGHTS FOR
CORRUGATED GALVANIZED STEEL PIPES
(125 mm × 25 mm CORRUGATIONS)

DESIGN LIFE - 25 YR										
PIPE DIAMETER (mm)	HEIGHTS OF FILL (m)									
	1.63 mm thickness		2.01 mm thickness		2.77 mm thickness		3.51 mm thickness		4.27 mm thickness	
	MIN	MAX	MIN	MAX	MIN	MAX	MIN	MAX	MIN	MAX
1350	0.8	4.3	0.6	8.8	0.6	18.6	0.5	28.0	0.5	35.1
1500	0.8	4.0	0.8	7.9	0.6	16.8	0.5	25.3	0.5	31.7
1650	0.8	3.4	0.8	7.3	0.6	15.2	0.6	22.9	0.5	28.7
1800	0.9	3.0	0.8	6.7	0.6	13.7	0.6	21.0	0.5	26.2
2100	0.9	2.7	0.8	5.8	0.8	11.9	0.6	18.0	0.6	22.6
2400	—	—	0.9	5.2	0.8	10.4	0.8	15.8	0.6	19.8

DESIGN LIFE - 50 YR										
PIPE DIAMETER (mm)	HEIGHTS OF FILL (m)									
	1.63 mm thickness		2.01 mm thickness		2.77 mm thickness		3.51 mm thickness		4.27 mm thickness	
	MIN	MAX	MIN	MAX	MIN	MAX	MIN	MAX	MIN	MAX
1350	—	—	—	—	0.9	2.7	0.5	12.2	0.5	21.6
1500	—	—	—	—	1.1	2.4	0.5	11.0	0.5	19.5
1650	—	—	—	—	1.2	1.5	0.6	9.8	0.5	17.7
1800	—	—	—	—	—	—	0.6	9.1	0.5	16.2
2100	—	—	—	—	—	—	0.6	7.9	0.6	14.0
2400	—	—	—	—	—	—	0.8	6.7	0.6	12.2

TABLE 10.B.5 (ENGLISH)
ALLOWABLE FILL HEIGHTS FOR
CORRUGATED GALVANIZED STEEL PIPES
(5 in × 1 in CORRUGATIONS)

DESIGN LIFE - 25 YR										
PIPE DIAMETER (in)	HEIGHTS OF FILL (ft)									
	16 Gage		14 Gage		12 Gage		10 Gage		8 Gage	
	MIN	MAX	MIN	MAX	MIN	MAX	MIN	MAX	MIN	MAX
54	2.5	14	2.0	29	2.0	61	1.5	92	1.5	115
60	2.5	13	2.5	26	2.0	55	1.5	83	1.5	104
66	2.5	11	2.5	24	2.0	50	2.0	75	1.5	94
72	3.0	10	2.5	22	2.0	45	2.0	69	1.5	86
84	3.0	9	2.5	19	2.5	39	2.0	59	2.0	74
96	—	—	3.0	17	2.5	34	2.5	52	2.0	65

DESIGN LIFE - 50 YR										
PIPE DIAMETER (in)	HEIGHTS OF FILL (ft)									
	16 Gage		14 Gage		12 Gage		10 Gage		8 Gage	
	MIN	MAX	MIN	MAX	MIN	MAX	MIN	MAX	MIN	MAX
54	—	—	—	—	3.0	9	1.5	40	1.5	71
60	—	—	—	—	3.5	8	1.5	36	1.5	64
66	—	—	—	—	4.0	5	2.0	32	1.5	58
72	—	—	—	—	—	—	2.0	30	1.5	53
84	—	—	—	—	—	—	2.0	26	2.0	46
96	—	—	—	—	—	—	2.5	22	2.0	40

TABLE 10.B.6 (METRIC)
ALLOWABLE FILL HEIGHTS FOR
CORRUGATED ALUMINIZED STEEL PIPES
(68 mm × 13 mm CORRUGATIONS)

DESIGN LIFE - 25 YR								
PIPE DIAMETER (mm)	HEIGHTS OF FILL (m)							
	1.63 mm thickness		2.01 mm thickness		2.77 mm thickness		3.51 mm thickness	
	MIN	MAX	MIN	MAX	MIN	MAX	MIN	MAX
450	0.5	34.7	0.5	46.6	—	—	—	—
525	0.5	29.9	0.5	39.9	0.5	56.1	—	—
600	0.6	26.2	0.5	35.1	0.5	49.1	—	—
750	0.6	21.0	0.6	28.0	0.5	39.3	—	—
900	0.8	17.4	0.6	23.2	0.6	32.6	0.5	42.1
1050	0.8	14.9	0.8	20.1	0.6	28.0	0.6	36.0
1200	0.8	13.1	0.8	17.4	0.6	24.4	0.6	31.4
1350	—	—	0.8	15.5	0.8	21.6	0.6	28.0
1500	—	—	—	—	0.8	19.5	0.6	25.3
1650	—	—	—	—	—	—	0.8	22.9
1800	—	—	—	—	—	—	0.8	21.0

DESIGN LIFE - 50 YR								
PIPE DIAMETER (mm)	HEIGHTS OF FILL (m)							
	1.63 mm thickness		2.01 mm thickness		2.77 mm thickness		3.51 mm thickness	
	MIN	MAX	MIN	MAX	MIN	MAX	MIN	MAX
450	0.5	12.5	0.5	26.2	—	—	—	—
525	0.5	10.7	0.5	22.6	0.5	46.3	—	—
600	0.6	9.4	0.5	19.5	0.5	40.5	—	—
750	0.6	7.6	0.6	15.8	0.5	32.3	—	—
900	0.8	6.1	0.6	13.1	0.6	27.1	0.5	40.8
1050	0.8	5.5	0.8	11.3	0.6	23.2	0.6	35.1
1200	0.8	4.6	0.8	9.8	0.6	20.4	0.6	30.8
1350	—	—	0.8	8.8	0.8	18.0	0.6	27.4
1500	—	—	—	—	0.8	16.2	0.6	24.7
1650	—	—	—	—	—	—	0.8	22.3
1800	—	—	—	—	—	—	0.8	20.4

DESIGN LIFE - 100 YR								
PIPE DIAMETER (mm)	HEIGHTS OF FILL (m)							
	1.63 mm thickness		2.01 mm thickness		2.77 mm thickness		3.51 mm thickness	
	MIN	MAX	MIN	MAX	MIN	MAX	MIN	MAX
525	—	—	—	—	0.5	7.0	—	—
600	—	—	—	—	0.5	6.1	—	—
750	—	—	—	—	0.5	4.9	—	—
900	—	—	—	—	0.6	4.3	0.5	17.7
1050	—	—	—	—	0.6	3.7	0.6	15.2
1200	—	—	—	—	0.8	3.0	0.6	13.4
1350	—	—	—	—	0.9	2.7	0.6	11.9
1500	—	—	—	—	1.1	2.4	0.6	10.7
1650	—	—	—	—	—	—	0.8	9.8
1800	—	—	—	—	—	—	0.8	8.8

TABLE 10.B.6 (ENGLISH)
ALLOWABLE FILL HEIGHTS FOR
CORRUGATED ALUMINIZED STEEL PIPES
(2 2/3 in × 1/2 in CORRUGATIONS)

DESIGN LIFE - 25 YR								
PIPE DIAMETER (in)	HEIGHTS OF FILL (ft)							
	16 Gage		14 Gage		12 Gage		10 Gage	
	MIN	MAX	MIN	MAX	MIN	MAX	MIN	MAX
18	1.5	114	1.5	153	—	—	—	—
21	1.5	98	1.5	131	1.5	184	—	—
24	2.0	86	1.5	115	1.5	161	—	—
30	2.0	69	2.0	92	1.5	129	—	—
36	2.5	57	2.0	76	2.0	107	1.5	138
42	2.5	49	2.5	66	2.0	92	2.0	118
48	2.5	43	2.5	57	2.0	80	2.0	103
54	—	—	2.5	51	2.5	71	2.0	92
60	—	—	—	—	2.5	64	2.0	83
66	—	—	—	—	—	—	2.5	75
72	—	—	—	—	—	—	2.5	69

DESIGN LIFE - 50 YR								
PIPE DIAMETER (in)	HEIGHTS OF FILL (ft)							
	16 Gage		14 Gage		12 Gage		10 Gage	
	MIN	MAX	MIN	MAX	MIN	MAX	MIN	MAX
18	1.5	41	1.5	86	—	—	—	—
21	1.5	35	1.5	74	1.5	152	—	—
24	2.0	31	1.5	64	1.5	133	—	—
30	2.0	25	2.0	52	1.5	106	—	—
36	2.5	20	2.0	43	2.0	89	1.5	134
42	2.5	18	2.5	37	2.0	76	2.0	115
48	2.5	15	2.5	32	2.0	67	2.0	101
54	—	—	2.5	29	2.5	59	2.0	90
60	—	—	—	—	2.5	53	2.0	81
66	—	—	—	—	—	—	2.5	73
72	—	—	—	—	—	—	2.5	67

DESIGN LIFE - 100 YR								
PIPE DIAMETER (in)	HEIGHTS OF FILL (ft)							
	16 Gage		14 Gage		12 Gage		10 Gage	
	MIN	MAX	MIN	MAX	MIN	MAX	MIN	MAX
21	—	—	—	—	1.5	23	—	—
24	—	—	—	—	1.5	20	—	—
30	—	—	—	—	1.5	16	—	—
36	—	—	—	—	2.0	14	1.5	58
42	—	—	—	—	2.0	12	2.0	50
48	—	—	—	—	2.5	10	2.0	44
54	—	—	—	—	3.0	9	2.0	39
60	—	—	—	—	3.5	8	2.0	35
66	—	—	—	—	—	—	2.5	32
72	—	—	—	—	—	—	2.5	29

TABLE 10.B.7 (METRIC)
ALLOWABLE FILL HEIGHTS FOR
CORRUGATED ALUMINIZED STEEL PIPES
(75 mm × 25 mm CORRUGATIONS)

DESIGN LIFE - 25 YR								
PIPE DIAMETER (mm)	HEIGHTS OF FILL (m)							
	1.63 mm thickness		2.01 mm thickness		2.77 mm thickness		3.51 mm thickness	
	MIN	MAX	MIN	MAX	MIN	MAX	MIN	MAX
1350	0.8	13.4	0.6	18.0	0.6	25.0	0.5	32.3
1500	0.8	11.9	0.8	16.2	0.6	22.6	0.5	29.0
1650	0.8	11.0	0.8	14.6	0.6	20.4	0.6	26.2
1800	0.9	10.1	0.8	13.4	0.6	18.9	0.6	24.1
2100	0.9	8.5	0.8	11.6	0.8	16.2	0.6	20.7
2400	—	—	0.9	10.1	0.8	14.0	0.8	18.0

DESIGN LIFE - 50 YR								
PIPE DIAMETER (mm)	HEIGHTS OF FILL (m)							
	1.63 mm thickness		2.01 mm thickness		2.77 mm thickness		3.51 mm thickness	
	MIN	MAX	MIN	MAX	MIN	MAX	MIN	MAX
1350	0.8	4.9	0.6	10.1	0.6	20.7	0.5	31.4
1500	0.8	4.3	0.8	9.1	0.6	18.6	0.5	28.3
1650	0.8	4.0	0.8	8.2	0.6	17.1	0.6	25.6
1800	0.9	3.7	0.8	7.6	0.6	15.5	0.6	23.5
2100	0.9	3.0	0.8	6.4	0.8	13.4	0.6	20.1
2400	—	—	0.9	5.8	0.8	11.6	0.8	17.7

DESIGN LIFE - 100 YR								
PIPE DIAMETER (mm)	HEIGHTS OF FILL (m)							
	1.63 mm thickness		2.01 mm thickness		2.77 mm thickness		3.51 mm thickness	
	MIN	MAX	MIN	MAX	MIN	MAX	MIN	MAX
1350	—	—	—	—	0.8	3.0	0.5	13.7
1500	—	—	—	—	0.9	2.7	0.5	12.2
1650	—	—	—	—	0.9	2.1	0.6	11.0
1800	—	—	—	—	1.1	1.8	0.6	10.1
2100	—	—	—	—	—	—	0.6	8.8
2400	—	—	—	—	—	—	0.8	7.6

TABLE 10.B.7 (ENGLISH)
ALLOWABLE FILL HEIGHTS FOR
CORRUGATED ALUMINIZED STEEL PIPES
(3 in × 1 in CORRUGATIONS)

DESIGN LIFE - 25 YR								
PIPE DIAMETER (in)	HEIGHTS OF FILL (ft)							
	16 Gage		14 Gage		12 Gage		10 Gage	
	MIN	MAX	MIN	MAX	MIN	MAX	MIN	MAX
54	2.5	44	2.0	59	2.0	82	1.5	106
60	2.5	39	2.5	53	2.0	74	1.5	95
66	2.5	36	2.5	48	2.0	67	2.0	86
72	3.0	33	2.5	44	2.0	62	2.0	79
84	3.0	28	2.5	38	2.5	53	2.0	68
96	—	—	3.0	33	2.5	46	2.5	59

DESIGN LIFE - 50 YR								
PIPE DIAMETER (in)	HEIGHTS OF FILL (ft)							
	16 Gage		14 Gage		12 Gage		10 Gage	
	MIN	MAX	MIN	MAX	MIN	MAX	MIN	MAX
54	2.5	16	2.0	33	2.0	68	1.5	103
60	2.5	14	2.5	30	2.0	61	1.5	93
66	2.5	13	2.5	27	2.0	56	2.0	84
72	3.0	12	2.5	25	2.0	51	2.0	77
84	3.0	10	2.5	21	2.5	44	2.0	66
96	—	—	3.0	19	2.5	38	2.5	58

DESIGN LIFE - 100 YR								
PIPE DIAMETER (in)	HEIGHTS OF FILL (ft)							
	16 Gage		14 Gage		12 Gage		10 Gage	
	MIN	MAX	MIN	MAX	MIN	MAX	MIN	MAX
54	—	—	—	—	2.5	10	1.5	45
60	—	—	—	—	3.0	9	1.5	40
66	—	—	—	—	3.0	7	2.0	36
72	—	—	—	—	3.5	6	2.0	33
84	—	—	—	—	—	—	2.0	29
96	—	—	—	—	—	—	2.5	25

TABLE 10.B.8 (METRIC)
ALLOWABLE FILL HEIGHTS FOR
CORRUGATED ALUMINIZED STEEL PIPES
(125 mm × 25 mm CORRUGATIONS)

DESIGN LIFE - 25 YR								
PIPE DIAMETER (mm)	HEIGHTS OF FILL (m)							
	1.63 mm thickness		2.01 mm thickness		2.77 mm thickness		3.51 mm thickness	
	MIN	MAX	MIN	MAX	MIN	MAX	MIN	MAX
1350	0.8	11.9	0.6	15.8	0.6	22.3	0.5	28.7
1500	0.8	10.7	0.8	14.3	0.6	20.1	0.5	25.9
1650	0.8	9.8	0.8	13.1	0.6	18.3	0.6	23.5
1800	0.9	8.8	0.8	11.9	0.6	16.8	0.6	21.6
2100	—	—	0.8	10.4	0.8	14.3	0.6	18.6
2400	—	—	0.9	8.8	0.8	12.5	0.8	16.2

DESIGN LIFE - 50 YR								
PIPE DIAMETER (mm)	HEIGHTS OF FILL (m)							
	1.63 mm thickness		2.01 mm thickness		2.77 mm thickness		3.51 mm thickness	
	MIN	MAX	MIN	MAX	MIN	MAX	MIN	MAX
1350	0.8	4.3	0.6	8.8	0.6	18.6	0.5	28.0
1500	0.8	4.0	0.8	7.9	0.6	16.8	0.5	25.3
1650	0.8	3.4	0.8	7.3	0.6	15.2	0.6	22.9
1800	0.9	3.0	0.8	6.7	0.6	13.7	0.6	21.0
2100	—	—	0.8	5.8	0.8	11.9	0.6	18.0
2400	—	—	0.9	5.2	0.8	10.4	0.8	15.8

DESIGN LIFE - 100 YR								
PIPE DIAMETER (mm)	HEIGHTS OF FILL (m)							
	1.63 mm thickness		2.01 mm thickness		2.77 mm thickness		3.51 mm thickness	
	MIN	MAX	MIN	MAX	MIN	MAX	MIN	MAX
1350	—	—	—	—	0.8	2.7	0.5	12.2
1500	—	—	—	—	0.9	2.4	0.5	11.0
1650	—	—	—	—	1.2	2.1	0.6	9.8
1800	—	—	—	—	—	—	0.6	9.1
2100	—	—	—	—	—	—	0.6	7.9
2400	—	—	—	—	—	—	0.8	6.7

TABLE 10.B.8 (ENGLISH)
ALLOWABLE FILL HEIGHTS FOR
CORRUGATED ALUMINIZED STEEL PIPES
(5 in × 1 in CORRUGATIONS)

DESIGN LIFE - 25 YR								
PIPE DIAMETER (in)	HEIGHTS OF FILL (ft)							
	16 Gage		14 Gage		12 Gage		10 Gage	
	MIN	MAX	MIN	MAX	MIN	MAX	MIN	MAX
54	2.5	39	2.0	52	2.0	73	1.5	94
60	2.5	35	2.5	47	2.0	66	1.5	85
66	2.5	32	2.5	43	2.0	60	2.0	77
72	3.0	29	2.5	39	2.0	55	2.0	71
84	—	—	2.5	34	2.5	47	2.0	61
96	—	—	3.0	29	2.5	41	2.5	53

DESIGN LIFE - 50 YR								
PIPE DIAMETER (in)	HEIGHTS OF FILL (ft)							
	16 Gage		14 Gage		12 Gage		10 Gage	
	MIN	MAX	MIN	MAX	MIN	MAX	MIN	MAX
54	2.5	14	2.0	29	2.0	61	1.5	92
60	2.5	13	2.5	26	2.0	55	1.5	83
66	2.5	11	2.5	24	2.0	50	2.0	75
72	3.0	10	2.5	22	2.0	45	2.0	69
84	—	—	2.5	19	2.5	39	2.0	59
96	—	—	3.0	17	2.5	34	2.5	52

DESIGN LIFE - 100 YR								
PIPE DIAMETER (in)	HEIGHTS OF FILL (ft)							
	16 Gage		14 Gage		12 Gage		10 Gage	
	MIN	MAX	MIN	MAX	MIN	MAX	MIN	MAX
54	—	—	—	—	2.5	9	1.5	40
60	—	—	—	—	3.0	8	1.5	36
66	—	—	—	—	4.0	7	2.0	32
72	—	—	—	—	—	—	2.0	30
84	—	—	—	—	—	—	2.0	26
96	—	—	—	—	—	—	2.5	22

TABLE 10.B.9 (METRIC)
ALLOWABLE FILL HEIGHTS FOR CORRUGATED GALVANIZED STEEL PIPES (68 mm × 13 mm CORRUGATIONS)

POLYMER COATED (≤ 1.5 m/s)*

DESIGN LIFE - 25 YR										
PIPE DIAMETER (mm)	HEIGHTS OF FILL (m)									
	1.63 mm thickness		2.01 mm thickness		2.77 mm thickness		3.51 mm thickness		4.27 mm thickness	
	MIN	MAX	MIN	MAX	MIN	MAX	MIN	MAX	MIN	MAX
450	0.5	37.2	0.5	46.6	—	—	—	—	—	—
525	0.5	32.0	0.5	39.9	0.5	56.1	—	—	—	—
600	0.6	28.0	0.5	35.1	0.5	49.1	—	—	—	—
675	0.6	25.0	0.6	31.1	0.5	43.6	—	—	—	—
750	0.6	22.3	0.6	28.0	0.5	39.3	—	—	—	—
825	0.8	20.4	0.6	25.3	0.5	35.7	—	—	—	—
900	0.8	18.6	0.6	23.2	0.6	32.6	0.5	42.1	—	—
1050	0.8	15.8	0.8	20.1	0.6	28.0	0.6	36.0	0.5	43.9
1200	0.8	14.0	0.8	17.4	0.6	24.4	0.6	31.4	0.5	38.4
1350	—	—	0.8	15.5	0.8	21.6	0.6	28.0	0.6	34.1
1500	—	—	—	—	0.8	19.5	0.6	25.3	0.6	30.8
1650	—	—	—	—	—	—	0.8	22.9	0.6	28.0
1800	—	—	—	—	—	—	0.8	21.0	0.6	25.6
2100	—	—	—	—	—	—	—	—	0.8	19.8

DESIGN LIFE - 50 YR										
PIPE DIAMETER (mm)	HEIGHTS OF FILL (m)									
	1.63 mm thickness		2.01 mm thickness		2.77 mm thickness		3.51 mm thickness		4.27 mm thickness	
	MIN	MAX	MIN	MAX	MIN	MAX	MIN	MAX	MIN	MAX
450	0.6	3.7	0.5	17.1	—	—	—	—	—	—
525	0.8	3.0	0.5	14.6	0.5	38.4	—	—	—	—
600	0.9	2.7	0.5	12.8	0.5	33.8	—	—	—	—
675	1.1	1.8	0.6	11.6	0.5	29.9	—	—	—	—
750	—	—	0.6	10.4	0.5	26.8	—	—	—	—
825	—	—	0.6	9.4	0.5	24.4	—	—	—	—
900	—	—	0.6	8.5	0.6	22.6	0.5	36.3	—	—
1050	—	—	0.8	7.3	0.6	19.2	0.6	31.1	0.5	43.3
1200	—	—	0.8	6.4	0.6	16.8	0.6	27.1	0.5	37.8
1350	—	—	0.8	5.8	0.8	14.9	0.6	24.1	0.6	33.5
1500	—	—	—	—	0.8	13.4	0.6	21.6	0.6	30.2
1650	—	—	—	—	—	—	0.8	19.8	0.6	27.4
1800	—	—	—	—	—	—	0.8	18.3	0.6	25.3
2100	—	—	—	—	—	—	—	—	0.8	19.8

DESIGN LIFE - 100 YR										
PIPE DIAMETER (mm)	HEIGHTS OF FILL (m)									
	1.63 mm thickness		2.01 mm thickness		2.77 mm thickness		3.51 mm thickness		4.27 mm thickness	
	MIN	MAX	MIN	MAX	MIN	MAX	MIN	MAX	MIN	MAX
1050	—	—	—	—	—	—	—	—	0.8	3.4
1200	—	—	—	—	—	—	—	—	0.9	2.7
1350	—	—	—	—	—	—	—	—	1.1	2.4

* Design Flow Velocity does not exceed 1.5 m/s, low abrasive (minimal bedload) environment.

TABLE 10.B.9 (ENGLISH)
ALLOWABLE FILL HEIGHTS FOR CORRUGATED GALVANIZED STEEL PIPES
(2 2/3 in × 1/2 in CORRUGATIONS)

POLYMER COATED (≤ 5 ft/s)*

DESIGN LIFE - 25 YR										
PIPE DIAMETER (in)	HEIGHTS OF FILL (ft)									
	16 Gage		14 Gage		12 Gage		10 Gage		8 Gage	
	MIN	MAX	MIN	MAX	MIN	MAX	MIN	MAX	MIN	MAX
18	1.5	122	1.5	153	—	—	—	—	—	—
21	1.5	105	1.5	131	1.5	184	—	—	—	—
24	2.0	92	1.5	115	1.5	161	—	—	—	—
27	2.0	82	2.0	102	1.5	143	—	—	—	—
30	2.0	73	2.0	92	1.5	129	—	—	—	—
33	2.5	67	2.0	83	1.5	117	—	—	—	—
36	2.5	61	2.0	76	2.0	107	1.5	138	—	—
42	2.5	52	2.5	66	2.0	92	2.0	118	1.5	144
48	2.5	46	2.5	57	2.0	80	2.0	103	1.5	126
54	—	—	2.5	51	2.5	71	2.0	92	2.0	112
60	—	—	—	—	2.5	64	2.0	83	2.0	101
66	—	—	—	—	—	—	2.5	75	2.0	92
72	—	—	—	—	—	—	2.5	69	2.0	84
84	—	—	—	—	—	—	—	—	2.5	65

DESIGN LIFE - 50 YR										
PIPE DIAMETER (in)	HEIGHTS OF FILL (ft)									
	16 Gage		14 Gage		12 Gage		10 Gage		8 Gage	
	MIN	MAX	MIN	MAX	MIN	MAX	MIN	MAX	MIN	MAX
18	2.0	12	1.5	56	—	—	—	—	—	—
21	2.5	10	1.5	48	1.5	126	—	—	—	—
24	3.0	9	1.5	42	1.5	111	—	—	—	—
27	3.5	6	2.0	38	1.5	98	—	—	—	—
30	—	—	2.0	34	1.5	88	—	—	—	—
33	—	—	2.0	31	1.5	80	—	—	—	—
36	—	—	2.0	28	2.0	74	1.5	119	—	—
42	—	—	2.5	24	2.0	63	2.0	102	1.5	142
48	—	—	2.5	21	2.0	55	2.0	89	1.5	124
54	—	—	2.5	19	2.5	49	2.0	79	2.0	110
60	—	—	—	—	2.5	44	2.0	71	2.0	99
66	—	—	—	—	—	—	2.5	65	2.0	90
72	—	—	—	—	—	—	2.5	60	2.0	83
84	—	—	—	—	—	—	—	—	2.5	65

DESIGN LIFE - 100 YR										
PIPE DIAMETER (in)	HEIGHTS OF FILL (ft)									
	16 Gage		14 Gage		12 Gage		10 Gage		8 Gage	
	MIN	MAX	MIN	MAX	MIN	MAX	MIN	MAX	MIN	MAX
42	—	—	—	—	—	—	—	—	2.5	11
48	—	—	—	—	—	—	—	—	3.0	9
54	—	—	—	—	—	—	—	—	3.5	8

* Design Flow Velocity does not exceed 5 ft/s, low abrasive (minimal bedload) environment.

TABLE 10.B.10 (METRIC)
ALLOWABLE FILL HEIGHTS FOR CORRUGATED GALVANIZED STEEL PIPES (75 mm × 25 mm CORRUGATIONS)

POLYMER COATED (≤ 1.5 m/s)*

DESIGN LIFE - 25 YR										
PIPE DIAMETER (mm)	HEIGHTS OF FILL (m)									
	1.63 mm thickness		2.01 mm thickness		2.77 mm thickness		3.51 mm thickness		4.27 mm thickness	
	MIN	MAX	MIN	MAX	MIN	MAX	MIN	MAX	MIN	MAX
1350	0.8	14.3	0.6	18.0	0.6	25.0	0.5	32.3	0.5	39.3
1500	0.8	12.8	0.8	16.2	0.6	22.6	0.5	29.0	0.5	35.4
1650	0.8	11.6	0.8	14.6	0.6	20.4	0.6	26.2	0.5	32.3
1800	0.9	10.7	0.8	13.4	0.6	18.9	0.6	24.1	0.5	29.6
2100	0.9	9.1	0.8	11.6	0.8	16.2	0.6	20.7	0.6	25.3
2400	—	—	0.9	10.1	0.8	14.0	0.8	18.0	0.6	22.3

DESIGN LIFE - 50 YR										
PIPE DIAMETER (mm)	HEIGHTS OF FILL (m)									
	1.63 mm thickness		2.01 mm thickness		2.77 mm thickness		3.51 mm thickness		4.27 mm thickness	
	MIN	MAX	MIN	MAX	MIN	MAX	MIN	MAX	MIN	MAX
1350	—	—	0.6	6.7	0.6	17.4	0.5	27.7	0.5	38.7
1500	—	—	0.8	5.8	0.6	15.5	0.5	25.0	0.5	35.1
1650	—	—	0.8	5.5	0.6	14.0	0.6	22.9	0.5	31.7
1800	—	—	0.8	4.9	0.6	12.8	0.6	21.0	0.5	29.3
2100	—	—	0.8	4.3	0.8	11.0	0.6	18.0	0.6	25.0
2400	—	—	0.9	3.7	0.8	9.8	0.8	15.5	0.6	21.9

DESIGN LIFE - 100 YR										
PIPE DIAMETER (mm)	HEIGHTS OF FILL (m)									
	1.63 mm thickness		2.01 mm thickness		2.77 mm thickness		3.51 mm thickness		4.27 mm thickness	
	MIN	MAX	MIN	MAX	MIN	MAX	MIN	MAX	MIN	MAX
1350	—	—	—	—	—	—	—	—	0.6	2.7
1500	—	—	—	—	—	—	—	—	0.6	2.4
1650	—	—	—	—	—	—	—	—	1.2	1.8

* Design Flow Velocity does not exceed 1.5 m/s, low abrasive (minimal bedload) environment.

TABLE 10.B.10 (ENGLISH)
ALLOWABLE FILL HEIGHTS FOR
CORRUGATED GALVANIZED STEEL PIPES
(3 in × 1 in CORRUGATIONS)

POLYMER COATED (≤ 5 ft/s)*

DESIGN LIFE - 25 YR										
PIPE DIAMETER (in)	HEIGHTS OF FILL (ft)									
	16 Gage		14 Gage		12 Gage		10 Gage		8 Gage	
	MIN	MAX	MIN	MAX	MIN	MAX	MIN	MAX	MIN	MAX
54	2.5	47	2.0	59	2.0	82	1.5	106	1.5	129
60	2.5	42	2.5	53	2.0	74	1.5	95	1.5	116
66	2.5	38	2.5	48	2.0	67	2.0	86	1.5	106
72	3.0	35	2.5	44	2.0	62	2.0	79	1.5	97
84	3.0	30	2.5	38	2.5	53	2.0	68	2.0	83
96	—	—	3.0	33	2.5	46	2.5	59	2.0	73

DESIGN LIFE - 50 YR										
PIPE DIAMETER (in)	HEIGHTS OF FILL (ft)									
	16 Gage		14 Gage		12 Gage		10 Gage		8 Gage	
	MIN	MAX	MIN	MAX	MIN	MAX	MIN	MAX	MIN	MAX
54	—	—	2.0	22	2.0	57	1.5	91	1.5	127
60	—	—	2.5	19	2.0	51	1.5	82	1.5	115
66	—	—	2.5	18	2.0	46	2.0	75	1.5	104
72	—	—	2.5	16	2.0	42	2.0	69	1.5	96
84	—	—	2.5	14	2.5	36	2.0	59	2.0	82
96	—	—	3.0	12	2.5	32	2.5	51	2.0	72

DESIGN LIFE - 100 YR										
PIPE DIAMETER (in)	HEIGHTS OF FILL (ft)									
	16 Gage		14 Gage		12 Gage		10 Gage		8 Gage	
	MIN	MAX	MIN	MAX	MIN	MAX	MIN	MAX	MIN	MAX
54	—	—	—	—	—	—	—	—	3.0	9
60	—	—	—	—	—	—	—	—	3.0	8
66	—	—	—	—	—	—	—	—	4.0	6

* Design Flow Velocity does not exceed 5 ft/s, low abrasive (minimal bedload) environment.

TABLE 10.B.11 (METRIC)
ALLOWABLE FILL HEIGHTS FOR CORRUGATED GALVANIZED STEEL PIPES (125 mm × 25 mm CORRUGATIONS)

POLYMER COATED (≤ 1.5 m/s)*

DESIGN LIFE - 25 YR										
PIPE DIAMETER (mm)	HEIGHTS OF FILL (m)									
	1.63 mm thickness		2.01 mm thickness		2.77 mm thickness		3.51 mm thickness		4.27 mm thickness	
	MIN	MAX	MIN	MAX	MIN	MAX	MIN	MAX	MIN	MAX
1350	0.8	12.8	0.6	15.8	0.6	22.3	0.5	28.7	0.5	35.1
1500	0.8	11.6	0.8	14.3	0.6	20.1	0.5	25.9	0.5	31.7
1650	0.8	10.4	0.8	13.1	0.6	18.3	0.6	23.5	0.5	28.7
1800	0.9	9.4	0.8	11.9	0.6	17.8	0.6	21.6	0.5	26.2
2100	0.9	8.2	0.8	10.4	0.8	14.3	0.6	18.6	0.6	22.6
2400	—	—	0.9	8.8	0.8	12.5	0.8	16.2	0.6	19.8

DESIGN LIFE - 50 YR										
PIPE DIAMETER (mm)	HEIGHTS OF FILL (m)									
	1.63 mm thickness		2.01 mm thickness		2.77 mm thickness		3.51 mm thickness		4.27 mm thickness	
	MIN	MAX	MIN	MAX	MIN	MAX	MIN	MAX	MIN	MAX
1350	—	—	0.6	5.8	0.6	15.2	0.5	24.7	0.5	34.4
1500	—	—	0.8	5.2	0.6	13.7	0.5	22.3	0.5	31.1
1650	—	—	0.8	4.9	0.6	12.5	0.6	20.4	0.5	28.3
1800	—	—	0.8	4.3	0.6	11.6	0.6	18.6	0.5	25.9
2100	—	—	0.8	3.7	0.8	9.8	0.6	15.8	0.6	22.3
2400	—	—	0.9	3.4	0.8	8.5	0.8	14.0	0.6	19.5

DESIGN LIFE - 100 YR										
PIPE DIAMETER (mm)	HEIGHTS OF FILL (m)									
	1.63 mm thickness		2.01 mm thickness		2.77 mm thickness		3.51 mm thickness		4.27 mm thickness	
	MIN	MAX	MIN	MAX	MIN	MAX	MIN	MAX	MIN	MAX
1350	—	—	—	—	—	—	—	—	0.9	2.4
1500	—	—	—	—	—	—	—	—	1.2	1.5

* Design Flow Velocity does not exceed 1.5 m/s, low abrasive (minimal bedload) environment.

TABLE 10.B.11 (ENGLISH)
ALLOWABLE FILL HEIGHTS FOR CORRUGATED GALVANIZED STEEL PIPES
(5 in × 1 in CORRUGATIONS)

POLYMER COATED (≤ 5 ft/s)*

DESIGN LIFE - 25 YR										
PIPE DIAMETER (in)	HEIGHTS OF FILL (ft)									
	16 Gage		14 Gage		12 Gage		10 Gage		8 Gage	
	MIN	MAX	MIN	MAX	MIN	MAX	MIN	MAX	MIN	MAX
54	2.5	42	2.0	52	2.0	73	1.5	94	1.5	115
60	2.5	38	2.5	47	2.0	66	1.5	85	1.5	104
66	2.5	34	2.5	43	2.0	60	2.0	77	1.5	94
72	3.0	31	2.5	39	2.0	55	2.0	71	1.5	86
84	3.0	27	2.5	34	2.5	47	2.0	61	2.0	74
96	—	—	3.0	29	2.5	41	2.5	53	2.0	65

DESIGN LIFE - 50 YR										
PIPE DIAMETER (in)	HEIGHTS OF FILL (ft)									
	16 Gage		14 Gage		12 Gage		10 Gage		8 Gage	
	MIN	MAX	MIN	MAX	MIN	MAX	MIN	MAX	MIN	MAX
54	—	—	2.0	19	2.0	50	1.5	81	1.5	113
60	—	—	2.5	17	2.0	45	1.5	73	1.5	102
66	—	—	2.5	16	2.0	41	2.0	67	1.5	93
72	—	—	2.5	14	2.0	38	2.0	61	1.5	85
84	—	—	2.5	12	2.5	32	2.0	52	2.0	73
96	—	—	3.0	11	2.5	28	2.5	46	2.0	64

DESIGN LIFE - 100 YR										
PIPE DIAMETER (in)	HEIGHTS OF FILL (ft)									
	16 Gage		14 Gage		12 Gage		10 Gage		8 Gage	
	MIN	MAX	MIN	MAX	MIN	MAX	MIN	MAX	MIN	MAX
54	—	—	—	—	—	—	—	—	3.0	8
60	—	—	—	—	—	—	—	—	4.0	5

* Design Flow Velocity does not exceed 5 ft/s, low abrasive (minimal bedload) environment.

TABLE 10.B.12 (METRIC)
ALLOWABLE FILL HEIGHTS FOR CORRUGATED GALVANIZED STEEL PIPES
(68 mm × 13 mm CORRUGATIONS)

POLYMER COATED (> 1.5 m/s)*

DESIGN LIFE - 25 YR										
PIPE DIAMETER (mm)	HEIGHTS OF FILL (m)									
	1.63 mm thickness		2.01 mm thickness		2.77 mm thickness		3.51 mm thickness		4.27 mm thickness	
	MIN	MAX	MIN	MAX	MIN	MAX	MIN	MAX	MIN	MAX
450	0.5	30.5	0.5	44.2	—	—	—	—	—	—
525	0.5	25.9	0.5	37.8	0.5	56.1	—	—	—	—
600	0.6	22.9	0.5	33.2	0.5	49.1	—	—	—	—
675	0.6	20.1	0.6	29.6	0.5	43.6	—	—	—	—
750	0.6	18.3	0.6	26.5	0.5	39.3	—	—	—	—
825	0.8	16.5	0.6	24.1	0.5	35.7	—	—	—	—
900	0.8	15.2	0.6	22.3	0.6	32.6	0.5	42.1	—	—
1050	0.8	13.1	0.8	18.9	0.6	28.0	0.6	36.0	0.5	43.9
1200	0.8	11.3	0.8	16.5	0.6	24.4	0.6	31.4	0.5	38.4
1350	—	—	0.8	14.6	0.8	21.6	0.6	28.0	0.6	34.1
1500	—	—	—	—	0.8	19.5	0.6	25.3	0.6	30.8
1650	—	—	—	—	—	—	0.8	22.9	0.6	28.0
1800	—	—	—	—	—	—	0.8	21.0	0.6	25.6
2100	—	—	—	—	—	—	—	—	0.8	19.8

DESIGN LIFE - 50 YR										
PIPE DIAMETER (mm)	HEIGHTS OF FILL (m)									
	1.63 mm thickness		2.01 mm thickness		2.77 mm thickness		3.51 mm thickness		4.27 mm thickness	
	MIN	MAX	MIN	MAX	MIN	MAX	MIN	MAX	MIN	MAX
525	—	—	—	—	0.5	22.9	—	—	—	—
600	—	—	—	—	0.5	19.8	—	—	—	—
675	—	—	—	—	0.5	17.7	—	—	—	—
750	—	—	—	—	0.5	15.8	—	—	—	—
825	—	—	—	—	0.5	14.6	—	—	—	—
900	—	—	—	—	0.6	13.4	0.5	27.1	—	—
1050	—	—	—	—	0.6	11.3	0.6	23.2	0.5	35.4
1200	—	—	—	—	0.6	10.1	0.6	20.1	0.5	30.8
1350	—	—	—	—	0.8	8.8	0.6	18.0	0.6	27.4
1500	—	—	—	—	0.8	7.9	0.6	16.2	0.6	24.7
1650	—	—	—	—	—	—	0.8	14.6	0.6	22.6
1800	—	—	—	—	—	—	0.8	13.4	0.6	20.7
2100	—	—	—	—	—	—	—	—	0.8	17.7

* Design Flow Velocity exceeds 1.5 m/s.

TABLE 10.B.12 (ENGLISH)
ALLOWABLE FILL HEIGHTS FOR CORRUGATED GALVANIZED STEEL PIPES
(2 2/3 in × 1/2 in CORRUGATIONS)

POLYMER COATED (> 5 ft/s)*

DESIGN LIFE - 25 YR										
PIPE DIAMETER (in)	HEIGHTS OF FILL (ft)									
	16 Gage		14 Gage		12 Gage		10 Gage		8 Gage	
	MIN	MAX	MIN	MAX	MIN	MAX	MIN	MAX	MIN	MAX
18	1.5	100	1.5	145	—	—	—	—	—	—
21	1.5	85	1.5	124	1.5	184	—	—	—	—
24	2.0	75	1.5	109	1.5	161	—	—	—	—
27	2.0	66	2.0	97	1.5	143	—	—	—	—
30	2.0	60	2.0	87	1.5	129	—	—	—	—
33	2.5	54	2.0	79	1.5	117	—	—	—	—
36	2.5	50	2.0	73	2.0	107	1.5	138	—	—
42	2.5	43	2.5	62	2.0	92	2.0	118	1.5	144
48	2.5	37	2.5	54	2.0	80	2.0	103	1.5	126
54	—	—	2.5	48	2.5	71	2.0	92	2.0	112
60	—	—	—	—	2.5	64	2.0	83	2.0	101
66	—	—	—	—	—	—	2.5	75	2.0	92
72	—	—	—	—	—	—	2.5	69	2.0	84
84	—	—	—	—	—	—	—	—	2.5	65

DESIGN LIFE - 50 YR										
PIPE DIAMETER (in)	HEIGHTS OF FILL (ft)									
	16 Gage		14 Gage		12 Gage		10 Gage		8 Gage	
	MIN	MAX	MIN	MAX	MIN	MAX	MIN	MAX	MIN	MAX
21	—	—	—	—	1.5	75	—	—	—	—
24	—	—	—	—	1.5	65	—	—	—	—
27	—	—	—	—	1.5	58	—	—	—	—
30	—	—	—	—	1.5	52	—	—	—	—
33	—	—	—	—	1.5	48	—	—	—	—
36	—	—	—	—	2.0	44	1.5	89	—	—
42	—	—	—	—	2.0	37	2.0	76	1.5	116
48	—	—	—	—	2.0	33	2.0	66	1.5	101
54	—	—	—	—	2.5	29	2.0	59	2.0	90
60	—	—	—	—	2.5	26	2.0	53	2.0	81
66	—	—	—	—	—	—	2.5	48	2.0	74
72	—	—	—	—	—	—	2.5	44	2.0	68
84	—	—	—	—	—	—	—	—	2.5	58

* Design Flow Velocity exceeds 5 ft/s.

TABLE 10.B.13 (METRIC)
ALLOWABLE FILL HEIGHTS FOR CORRUGATED GALVANIZED STEEL PIPES
(75 mm × 25 mm CORRUGATIONS)

POLYMER COATED (> 1.5 m/s)*

DESIGN LIFE - 25 YR										
PIPE DIAMETER (mm)	HEIGHTS OF FILL (m)									
	1.63 mm thickness		2.01 mm thickness		2.77 mm thickness		3.51 mm thickness		4.27 mm thickness	
	MIN	MAX	MIN	MAX	MIN	MAX	MIN	MAX	MIN	MAX
1350	0.8	11.6	0.6	17.1	0.6	25.0	0.5	32.4	0.5	39.3
1500	0.8	10.4	0.8	15.2	0.6	22.6	0.5	29.0	0.5	35.4
1650	0.8	9.4	0.8	14.0	0.6	20.4	0.6	26.2	0.5	32.3
1800	0.9	8.8	0.8	12.8	0.6	18.9	0.6	24.1	0.5	29.6
2100	0.9	7.3	0.8	11.0	0.8	16.2	0.6	20.7	0.6	25.3
2400	—	—	0.9	9.4	0.8	14.0	0.8	18.0	0.6	22.3

DESIGN LIFE - 50 YR										
PIPE DIAMETER (mm)	HEIGHTS OF FILL (m)									
	1.63 mm thickness		2.01 mm thickness		2.77 mm thickness		3.51 mm thickness		4.27 mm thickness	
	MIN	MAX	MIN	MAX	MIN	MAX	MIN	MAX	MIN	MAX
1350	—	—	—	—	0.6	10.1	0.5	20.7	0.5	31.7
1500	—	—	—	—	0.6	9.1	0.5	16.6	0.5	28.3
1650	—	—	—	—	0.6	8.2	0.6	17.1	0.5	25.9
1800	—	—	—	—	0.6	7.6	0.6	15.5	0.5	23.8
2100	—	—	—	—	0.8	6.7	0.6	13.4	0.6	20.4
2400	—	—	—	—	0.8	5.8	0.8	11.6	0.6	17.7

* Design Flow Velocity exceeds 1.5 m/s.

TABLE 10.B.13 (ENGLISH)
ALLOWABLE FILL HEIGHTS FOR CORRUGATED GALVANIZED STEEL PIPES
(3 in × 1 in CORRUGATIONS)

POLYMER COATED (> 5 ft/s)*

DESIGN LIFE - 25 YR										
PIPE DIAMETER (in)	HEIGHTS OF FILL (ft)									
	16 Gage		14 Gage		12 Gage		10 Gage		8 Gage	
	MIN	MAX	MIN	MAX	MIN	MAX	MIN	MAX	MIN	MAX
54	2.5	38	2.0	56	2.0	82	1.5	106	1.5	129
60	2.5	34	2.5	50	2.0	74	1.5	95	1.5	116
66	2.5	31	2.5	46	2.0	67	2.0	86	1.5	106
72	3.0	29	2.5	42	2.0	62	2.0	79	1.5	97
84	3.0	24	2.5	36	2.5	53	2.0	68	2.0	83
96	—	—	3.0	31	2.5	46	2.5	59	2.0	73

DESIGN LIFE - 50 YR										
PIPE DIAMETER (in)	HEIGHTS OF FILL (ft)									
	16 Gage		14 Gage		12 Gage		10 Gage		8 Gage	
	MIN	MAX	MIN	MAX	MIN	MAX	MIN	MAX	MIN	MAX
54	—	—	—	—	2.0	33	1.5	68	1.5	104
60	—	—	—	—	2.0	30	1.5	61	1.5	93
66	—	—	—	—	2.0	27	2.0	56	1.5	85
72	—	—	—	—	2.0	25	2.0	51	1.5	78
84	—	—	—	—	2.5	22	2.0	44	2.0	67
96	—	—	—	—	2.5	19	2.5	38	2.0	58

* Design Flow Velocity exceeds 5 ft/s.

TABLE 10.B.14 (METRIC)
ALLOWABLE FILL HEIGHTS FOR CORRUGATED GALVANIZED STEEL PIPES (125 mm × 25 mm CORRUGATIONS)

POLYMER COATED (> 1.5 m/s)*

DESIGN LIFE - 25 YR										
PIPE DIAMETER (mm)	HEIGHTS OF FILL (m)									
	1.63 mm thickness		2.01 mm thickness		2.77 mm thickness		3.51 mm thickness		4.27 mm thickness	
	MIN	MAX	MIN	MAX	MIN	MAX	MIN	MAX	MIN	MAX
1350	0.8	10.4	0.6	15.2	0.6	22.3	0.5	28.6	0.5	35.1
1500	0.8	9.4	0.8	13.7	0.6	20.1	0.5	25.9	0.5	31.7
1650	0.8	8.5	0.8	12.5	0.6	18.3	0.6	23.5	0.5	28.7
1800	0.9	7.6	0.8	11.3	0.6	16.8	0.6	21.6	0.5	26.2
2100	0.9	6.7	0.8	9.8	0.8	14.3	0.6	18.6	0.6	22.6
2400	—	—	0.9	8.5	0.8	12.5	0.8	16.2	0.6	19.8

DESIGN LIFE - 50 YR										
PIPE DIAMETER (mm)	HEIGHTS OF FILL (m)									
	1.63 mm thickness		2.01 mm thickness		2.77 mm thickness		3.51 mm thickness		4.27 mm thickness	
	MIN	MAX	MIN	MAX	MIN	MAX	MIN	MAX	MIN	MAX
1350	—	—	—	—	0.6	9.1	0.5	18.6	0.5	28.0
1500	—	—	—	—	0.6	8.2	0.5	16.8	0.5	25.3
1650	—	—	—	—	0.6	7.3	0.6	15.2	0.5	22.9
1800	—	—	—	—	0.6	6.7	0.6	13.7	0.5	21.0
2100	—	—	—	—	0.8	5.8	0.6	11.9	0.6	18.0
2400	—	—	—	—	0.8	5.2	0.8	10.4	0.6	15.8

* Design Flow Velocity exceeds 1.5 m/s.

TABLE 10.B.14 (ENGLISH)
ALLOWABLE FILL HEIGHTS FOR
CORRUGATED GALVANIZED STEEL PIPES
(5 in × 1 in CORRUGATIONS)

POLYMER COATED (> 5 ft/s)*

DESIGN LIFE - 25 YR										
PIPE DIAMETER (in)	HEIGHTS OF FILL (ft)									
	16 Gage		14 Gage		12 Gage		10 Gage		8 Gage	
	MIN	MAX	MIN	MAX	MIN	MAX	MIN	MAX	MIN	MAX
54	2.5	34	2.0	50	2.0	73	1.5	94	1.5	115
60	2.5	31	2.5	45	2.0	66	1.5	85	1.5	104
66	2.5	28	2.5	41	2.0	60	2.0	77	1.5	94
72	3.0	25	2.5	37	2.0	55	2.0	71	1.5	86
84	3.0	22	2.5	32	2.5	47	2.0	61	2.0	74
96	—	—	3.0	28	2.5	41	2.5	53	2.0	65

DESIGN LIFE - 50 YR										
PIPE DIAMETER (in)	HEIGHTS OF FILL (ft)									
	16 Gage		14 Gage		12 Gage		10 Gage		8 Gage	
	MIN	MAX	MIN	MAX	MIN	MAX	MIN	MAX	MIN	MAX
54	—	—	—	—	2.0	30	1.5	61	1.5	92
60	—	—	—	—	2.0	27	1.5	55	1.5	83
66	—	—	—	—	2.0	24	2.0	50	1.5	75
72	—	—	—	—	2.0	22	2.0	45	1.5	69
84	—	—	—	—	2.5	19	2.0	39	2.0	59
96	—	—	—	—	2.5	17	2.5	34	2.0	52

* Design Flow Velocity exceeds 5 ft/s.

TABLE 10.B.15 (METRIC)
ALLOWABLE FILL HEIGHTS FOR
CORRUGATED ALUMINUM ALLOY PIPES
(68 mm × 13 mm CORRUGATIONS)

DESIGN LIFE - 25 YR										
PIPE DIAMETER (mm)	HEIGHTS OF FILL (m)									
	1.52 mm thickness		1.91 mm thickness		2.67 mm thickness		3.43 mm thickness		4.17 mm thickness	
	MIN	MAX	MIN	MAX	MIN	MAX	MIN	MAX	MIN	MAX
450	0.8	24.1	0.6	33.8	—	—	—	—	—	—
525	0.8	20.7	0.8	29.0	—	—	—	—	—	—
600	0.9	18.3	0.8	25.3	0.6	35.7	—	—	—	—
750	—	—	0.9	20.4	0.6	28.1	—	—	—	—
900	—	—	0.9	17.1	0.8	23.8	0.6	30.5	—	—
1050	—	—	—	—	0.8	20.4	0.6	26.2	—	—
1200	—	—	—	—	0.9	17.7	0.6	22.9	0.6	28.0
1350	—	—	—	—	0.9	14.3	0.8	18.6	0.6	23.2
1500	—	—	—	—	—	—	0.8	15.2	0.8	18.9
1650	—	—	—	—	—	—	—	—	0.8	15.2
1800	—	—	—	—	—	—	—	—	0.8	11.9

DESIGN LIFE - 50 YR										
PIPE DIAMETER (mm)	HEIGHTS OF FILL (m)									
	1.52 mm thickness		1.91 mm thickness		2.67 mm thickness		3.43 mm thickness		4.17 mm thickness	
	MIN	MAX	MIN	MAX	MIN	MAX	MIN	MAX	MIN	MAX
450	0.8	7.0	0.6	17.4	—	—	—	—	—	—
525	0.8	5.8	0.8	14.9	—	—	—	—	—	—
600	0.9	5.2	0.8	13.1	0.6	28.7	—	—	—	—
750	—	—	0.9	10.4	0.6	22.9	—	—	—	—
900	—	—	0.9	8.5	0.8	18.9	0.6	29.6	—	—
1050	—	—	—	—	0.8	16.5	0.6	25.3	—	—
1200	—	—	—	—	0.9	14.3	0.6	22.0	0.6	28.0
1350	—	—	—	—	0.9	12.8	0.8	18.6	0.6	23.2
1500	—	—	—	—	—	—	0.9	15.2	0.8	18.9
1650	—	—	—	—	—	—	—	—	0.8	15.2
1800	—	—	—	—	—	—	—	—	0.8	11.9

DESIGN LIFE - 100 YR										
PIPE DIAMETER (mm)	HEIGHTS OF FILL (m)									
	1.52 mm thickness		1.91 mm thickness		2.67 mm thickness		3.43 mm thickness		4.17 mm thickness	
	MIN	MAX	MIN	MAX	MIN	MAX	MIN	MAX	MIN	MAX
600	—	—	—	—	0.6	2.7	—	—	—	—
750	—	—	—	—	—	—	—	—	—	—
900	—	—	—	—	—	—	0.6	12.2	—	—
1050	—	—	—	—	—	—	0.6	10.4	—	—
1200	—	—	—	—	—	—	0.6	9.1	0.6	16.8
1350	—	—	—	—	—	—	0.8	8.2	0.6	14.9
1500	—	—	—	—	—	—	0.8	7.3	0.8	13.4
1650	—	—	—	—	—	—	—	—	0.8	12.2
1800	—	—	—	—	—	—	—	—	0.8	11.3

TABLE 10.B.15 (ENGLISH)
ALLOWABLE FILL HEIGHTS FOR
CORRUGATED ALUMINUM ALLOY PIPES
(2 2/3 in × 1/2 in CORRUGATIONS)

DESIGN LIFE - 25 YR										
PIPE DIAMETER (in)	HEIGHTS OF FILL (ft)									
	16 Gage		14 Gage		12 Gage		10 Gage		8 Gage	
	MIN	MAX	MIN	MAX	MIN	MAX	MIN	MAX	MIN	MAX
18	2.5	79	2.0	111	—	—	—	—	—	—
21	2.5	68	2.5	95	—	—	—	—	—	—
24	3.0	60	2.5	83	2.0	117	—	—	—	—
30	—	—	3.0	67	2.0	93	—	—	—	—
36	—	—	3.0	56	2.5	78	2.0	100	—	—
42	—	—	—	—	2.5	67	2.0	86	—	—
48	—	—	—	—	3.0	58	2.0	75	2.0	92
54	—	—	—	—	3.0	47	2.5	61	2.0	76
60	—	—	—	—	—	—	2.5	50	2.5	62
66	—	—	—	—	—	—	—	—	2.5	50
72	—	—	—	—	—	—	—	—	2.5	39

DESIGN LIFE - 50 YR										
PIPE DIAMETER (in)	HEIGHTS OF FILL (ft)									
	16 Gage		14 Gage		12 Gage		10 Gage		8 Gage	
	MIN	MAX	MIN	MAX	MIN	MAX	MIN	MAX	MIN	MAX
18	2.5	23	2.0	57	—	—	—	—	—	—
21	2.5	19	2.5	49	—	—	—	—	—	—
24	3.0	17	2.5	43	2.0	94	—	—	—	—
30	—	—	3.0	34	2.0	75	—	—	—	—
36	—	—	3.0	28	2.5	62	2.0	97	—	—
42	—	—	—	—	2.5	54	2.0	83	—	—
48	—	—	—	—	3.0	47	2.0	72	2.0	92
54	—	—	—	—	3.0	42	2.5	61	2.0	76
60	—	—	—	—	—	—	2.5	50	2.5	62
66	—	—	—	—	—	—	—	—	2.5	50
72	—	—	—	—	—	—	—	—	2.5	39

DESIGN LIFE - 100 YR										
PIPE DIAMETER (in)	HEIGHTS OF FILL (ft)									
	16 Gage		14 Gage		12 Gage		10 Gage		8 Gage	
	MIN	MAX	MIN	MAX	MIN	MAX	MIN	MAX	MIN	MAX
24	—	—	—	—	2.0	9	—	—	—	—
30	—	—	—	—	—	—	—	—	—	—
36	—	—	—	—	—	—	2.0	40	—	—
42	—	—	—	—	—	—	2.0	34	—	—
48	—	—	—	—	—	—	2.0	30	2.0	55
54	—	—	—	—	—	—	2.5	27	2.0	49
60	—	—	—	—	—	—	2.5	24	2.5	44
66	—	—	—	—	—	—	—	—	2.5	40
72	—	—	—	—	—	—	—	—	2.5	37

TABLE 10.B.16 (METRIC)
ALLOWABLE FILL HEIGHTS FOR
CORRUGATED ALUMINUM ALLOY PIPES
(75 mm × 25 mm CORRUGATIONS)

DESIGN LIFE - 25 YR										
PIPE DIAMETER (mm)	HEIGHTS OF FILL (m)									
	1.52 mm thickness		1.91 mm thickness		2.67 mm thickness		3.43 mm thickness		4.17 mm thickness	
	MIN	MAX	MIN	MAX	MIN	MAX	MIN	MAX	MIN	MAX
750	0.6	16.8	0.6	23.5	0.5	32.9	0.5	43.9	—	—
900	0.8	14.0	0.8	19.5	0.6	27.4	0.5	36.6	—	—
1050	0.8	11.9	0.8	16.8	0.6	23.5	0.6	31.4	—	—
1200	0.9	10.4	0.8	14.6	0.8	20.4	0.6	27.4	0.6	32.3
1350	0.9	9.1	0.9	13.1	0.8	18.3	0.6	24.4	0.6	28.6
1500	1.1	8.2	0.9	11.9	0.8	16.5	0.8	21.9	0.6	25.9
1650	1.1	7.6	0.9	10.7	0.9	14.9	0.8	19.8	0.8	23.5
1800	1.1	7.0	1.1	9.8	0.9	13.7	0.8	18.3	0.8	21.6
2100	—	—	—	—	0.9	11.6	0.9	15.5	0.8	18.6

DESIGN LIFE - 50 YR										
PIPE DIAMETER (mm)	HEIGHTS OF FILL (m)									
	1.52 mm thickness		1.91 mm thickness		2.67 mm thickness		3.43 mm thickness		4.17 mm thickness	
	MIN	MAX	MIN	MAX	MIN	MAX	MIN	MAX	MIN	MAX
750	0.6	4.9	0.6	11.9	0.5	26.2	0.5	42.4	—	—
900	0.8	4.0	0.8	10.1	0.6	21.9	0.5	35.4	—	—
1050	0.8	3.4	0.8	8.5	0.6	18.9	0.6	30.2	—	—
1200	0.9	3.0	0.8	7.6	0.8	16.5	0.6	26.5	0.6	32.3
1350	0.9	2.7	0.9	6.7	0.8	14.6	0.6	23.5	0.6	28.6
1500	1.1	1.8	0.9	6.1	0.8	13.1	0.8	21.0	0.6	25.9
1650	—	—	0.9	5.5	0.9	11.9	0.8	19.2	0.8	23.5
1800	—	—	1.1	4.9	0.9	11.0	0.8	17.7	0.8	21.6
2100	—	—	—	—	0.9	9.4	0.9	15.2	0.8	18.6

DESIGN LIFE - 100 YR										
PIPE DIAMETER (mm)	HEIGHTS OF FILL (m)									
	1.52 mm thickness		1.91 mm thickness		2.67 mm thickness		3.43 mm thickness		4.17 mm thickness	
	MIN	MAX	MIN	MAX	MIN	MAX	MIN	MAX	MIN	MAX
750	—	—	—	—	—	—	0.5	17.4	—	—
900	—	—	—	—	—	—	0.5	14.6	—	—
1050	—	—	—	—	—	—	0.6	12.5	—	—
1200	—	—	—	—	—	—	0.6	11.0	0.6	19.2
1350	—	—	—	—	—	—	0.6	9.8	0.6	17.1
1500	—	—	—	—	—	—	0.8	8.8	0.6	15.5
1650	—	—	—	—	—	—	0.8	7.9	0.8	14.0
1800	—	—	—	—	—	—	0.8	7.3	0.8	12.8
2100	—	—	—	—	—	—	0.9	6.1	0.8	11.0

TABLE 10.B.16 (ENGLISH)
ALLOWABLE FILL HEIGHTS FOR
CORRUGATED ALUMINUM ALLOY PIPES
(3 in × 1 in CORRUGATIONS)

DESIGN LIFE - 25 YR										
PIPE DIAMETER (in)	HEIGHTS OF FILL (ft)									
	16 Gage		14 Gage		12 Gage		10 Gage		8 Gage	
	MIN	MAX	MIN	MAX	MIN	MAX	MIN	MAX	MIN	MAX
30	2.0	55	2.0	77	1.5	108	1.5	144	—	—
36	2.5	46	2.5	64	2.0	90	1.5	120	—	—
42	2.5	39	2.5	55	2.0	77	2.0	103	—	—
48	3.0	34	2.5	48	2.5	67	2.0	90	2.0	106
54	3.0	30	3.0	43	2.5	60	2.0	80	2.0	94
60	3.5	27	3.0	39	2.5	54	2.5	72	2.0	85
66	3.5	25	3.0	35	3.0	49	2.5	65	2.5	77
72	3.5	23	3.5	32	3.0	45	2.5	60	2.5	71
84	—	—	—	—	3.0	38	3.0	51	2.5	61

DESIGN LIFE - 50 YR										
PIPE DIAMETER (in)	HEIGHTS OF FILL (ft)									
	16 Gage		14 Gage		12 Gage		10 Gage		8 Gage	
	MIN	MAX	MIN	MAX	MIN	MAX	MIN	MAX	MIN	MAX
30	2.0	16	2.0	39	1.5	86	1.5	139	—	—
36	2.5	13	2.5	33	2.0	72	1.5	116	—	—
42	2.5	11	2.5	28	2.0	62	2.0	99	—	—
48	3.0	10	2.5	25	2.5	54	2.0	87	2.0	106
54	3.0	9	3.0	22	2.5	48	2.0	77	2.0	94
60	3.5	6	3.0	20	2.5	43	2.5	69	2.0	85
66	—	—	3.0	18	3.0	39	2.5	63	2.5	77
72	—	—	3.5	16	3.0	36	2.5	58	2.5	71
84	—	—	—	—	3.0	31	3.0	50	2.5	61

DESIGN LIFE - 100 YR										
PIPE DIAMETER (in)	HEIGHTS OF FILL (ft)									
	16 Gage		14 Gage		12 Gage		10 Gage		8 Gage	
	MIN	MAX	MIN	MAX	MIN	MAX	MIN	MAX	MIN	MAX
30	—	—	—	—	—	—	1.5	57	—	—
36	—	—	—	—	—	—	1.5	48	—	—
42	—	—	—	—	—	—	2.0	41	—	—
48	—	—	—	—	—	—	2.0	36	2.0	63
54	—	—	—	—	—	—	2.0	32	2.0	56
60	—	—	—	—	—	—	2.5	29	2.0	51
66	—	—	—	—	—	—	2.5	26	2.5	46
72	—	—	—	—	—	—	2.5	24	2.5	42
84	—	—	—	—	—	—	3.0	20	2.5	36

TABLE 10.B.17 (METRIC)
ALLOWABLE FILL HEIGHTS FOR
CORRUGATED GALVANIZED STEEL PIPE ARCHES
(68 mm × 13 mm CORRUGATIONS)

DESIGN LIFE - 25 YR				
SPAN × RISE (mm)	**MINIMUM COVER FOR 20 tonne/m^2 (m)**	**THICKNESS (mm)**	**MAXIMUM HEIGHTS OF COVER FOR CORNER BEARING PRESSURES IN tonne/m^2 (m)**	
			20 tonne	**30 tonne**
530 × 380	0.5	1.63	3.1	5.0
610 × 460	0.5	1.63	3.1	5.0
710 × 510	0.5	1.63	3.1	5.0
885 × 610	0.5	1.63	3.1	5.0
1060 × 740	0.5	1.63	3.1	5.0
1240 × 840	0.5	2.01	3.1	5.0
1440 × 970	0.5	2.77	3.1	5.0
1620 × 1100	0.5	2.77	3.1	5.0
1800 × 1200	0.5	3.51	3.1	5.0
1950 × 1320	0.5	4.27	3.1	5.0
2100 × 1450	0.5	4.27	3.1	5.0

DESIGN LIFE - 50 YR				
SPAN × RISE (mm)	**MINIMUM COVER FOR 20 tonne/m^2 (m)**	**THICKNESS (mm)**	**MAXIMUM HEIGHTS OF COVER FOR CORNER BEARING PRESSURES IN tonne/m^2 (m)**	
			20 tonne	**30 tonne**
1440 × 970	0.9	2.77	2.2	2.2
1620 × 1100	1.2	2.77	1.7	1.7
1800 × 1200	0.5	3.51	3.1	5.0
1950 × 1320	0.5	4.27	3.1	5.0
2100 × 1450	0.5	4.27	3.1	5.0

TABLE 10.B.17 (ENGLISH)
ALLOWABLE FILL HEIGHTS FOR
CORRUGATED GALVANIZED STEEL PIPE ARCHES
(2 2/3 in × 1/2 in CORRUGATIONS)

DESIGN LIFE - 25 YR				
SPAN × RISE (in)	**MINIMUM COVER FOR 2 tons/ft^2 (ft)**	**GAGE**	**MAXIMUM HEIGHTS OF COVER FOR CORNER BEARING PRESSURES IN tons/ft^2 (ft)**	
			2 tons	**3 tons**
21 × 15	1.5	16	10	16
24 × 18	1.5	16	10	16
28 × 20	1.5	16	10	16
35 × 24	1.5	16	10	16
42 × 29	1.5	16	10	16
49 × 33	1.5	14	10	16
57 × 38	1.5	12	10	16
64 × 43	1.5	12	10	16
71 × 47	1.5	10	10	16
77 × 52	1.5	8	10	16
83 × 57	1.5	8	10	16

DESIGN LIFE - 50 YR				
SPAN × RISE (in)	**MINIMUM COVER FOR 2 tons/ft^2 (ft)**	**GAGE**	**MAXIMUM HEIGHTS OF COVER FOR CORNER BEARING PRESSURES IN tons/ft^2 (ft)**	
			2 tons	**3 tons**
57 × 38	3	12	7	7
64 × 43	4	12	5.5	5.5
71 × 47	1	10	10	16
77 × 52	1	8	10	16
83 × 57	1	8	10	16

TABLE 10.B.18 (METRIC)
ALLOWABLE FILL HEIGHTS FOR
CORRUGATED GALVANIZED STEEL PIPE ARCHES
(75 mm × 25 mm CORRUGATIONS)

DESIGN LIFE - 25 YR				
SPAN × RISE (mm)	**MINIMUM COVER FOR 20 tonne/m^2 (m)**	**THICKNESS (mm)**	**MAXIMUM HEIGHTS OF COVER FOR CORNER BEARING PRESSURES IN tonne/m^2 (m)**	
			20 tonne	**30 tonne**
1340 × 1050	0.5	2.01	3.1	4.6
1520 × 1170	0.5	2.01	5.5	8.2
1670 × 1300	0.5	2.01	5.5	8.2
1850 × 1400	0.5	2.01	5.2	7.3
2050 × 1500	0.5	2.01	4.6	6.7
2200 × 1620	0.5	2.01	4.3	6.1
2400 × 1720	0.5	2.01	4.3	5.8
2600 × 1820	0.5	2.01	4.3	5.2
2840 × 1920	0.5	2.01	4.3	4.9
2970 × 2020	0.5	2.77	4.3	6.4
3240 × 2120	0.5	2.77	4.3	6.4
3470 × 2220	0.5	2.77	4.0	6.1
3600 × 2320	0.5	3.51	4.0	6.1

DESIGN LIFE - 50 YR				
SPAN × RISE (mm)	**MINIMUM COVER FOR 20 tonne/m^2 (m)**	**THICKNESS (mm)**	**MAXIMUM HEIGHTS OF COVER FOR CORNER BEARING PRESSURES IN tonne/m^2 (m)**	
			20 tonne	**30 tonne**
3600 × 2320	0.5	3.51	4.0	5.2

TABLE 10.B.18 (ENGLISH)
ALLOWABLE FILL HEIGHTS FOR
CORRUGATED GALVANIZED STEEL PIPE ARCHES
(3 in × 1 in CORRUGATIONS)

DESIGN LIFE - 25 YR				
SPAN × RISE (in)	**MINIMUM COVER FOR 2 tons/ft^2 (ft)**	**GAGE**	**MAXIMUM HEIGHTS OF COVER FOR CORNER BEARING PRESSURES IN tons/ft^2 (ft)**	
			2 tons	**3 tons**
53 × 41	1.5	14	10	15
60 × 46	1.5	14	18	27
66 × 51	1.5	14	18	27
73 × 55	1.5	14	17	24
81 × 59	1.5	14	15	22
87 × 63	1.5	14	14	20
95 × 67	1.5	14	14	19
103 × 71	1.5	14	14	17
112 × 75	1.5	14	14	16
117 × 79	1.5	12	14	21
128 × 83	1.5	12	14	21
137 × 87	1.5	12	13	20
142 × 91	1.5	10	13	20

DESIGN LIFE - 50 YR				
SPAN × RISE (in)	**MINIMUM COVER FOR 2 tons/ft^2 (ft)**	**GAGE**	**MAXIMUM HEIGHTS OF COVER FOR CORNER BEARING PRESSURES IN tons/ft^2 (ft)**	
			2 tons	**3 tons**
142 × 91	1.5	10	13	17

TABLE 10.B.19 (METRIC)
ALLOWABLE FILL HEIGHTS FOR
CORRUGATED GALVANIZED STEEL PIPE ARCHES
(125 mm × 25 mm CORRUGATIONS)

DESIGN LIFE - 25 YR				
SPAN × RISE (mm)	**MINIMUM COVER FOR 20 tonne/m^2 (m)**	**THICKNESS (mm)**	**MAXIMUM HEIGHTS OF COVER FOR CORNER BEARING PRESSURES IN tonne/m^2 (m)**	
			20 tonne	**30 tonne**
1340 × 1050	0.5	2.77	3.1	4.6
1520 × 1170	0.5	2.77	5.5	8.2
1670 × 1300	0.5	2.77	5.5	8.2
1850 × 1400	0.5	2.77	5.2	7.9
2050 × 1500	0.5	2.77	4.6	6.7
2200 × 1620	0.5	2.77	4.3	6.7
2400 × 1720	0.5	2.77	4.3	6.7
2600 × 1820	0.5	2.77	4.3	6.4
2840 × 1920	0.5	2.77	4.3	6.4
2970 × 2020	0.5	2.77	4.3	6.4
3240 × 2120	0.5	2.77	4.3	6.4
3470 × 2220	0.5	2.77	4.0	6.1
3600 × 2320	0.5	3.51	4.0	6.1

DESIGN LIFE - 50 YR				
SPAN × RISE (mm)	**MINIMUM COVER FOR 20 tonne/m^2 (m)**	**THICKNESS (mm)**	**MAXIMUM HEIGHTS OF COVER FOR CORNER BEARING PRESSURES IN tonne/m^2 (m)**	
			20 tonne	**30 tonne**
1340 × 1050	0.9	2.77	2.7	2.7
1520 × 1170	1.1	2.77	2.1	2.1
1670 × 1300	1.4	2.77	1.7	1.7
3600 × 2320	0.5	3.51	4.0	4.6

TABLE 10.B.19 (ENGLISH)
ALLOWABLE FILL HEIGHTS FOR
CORRUGATED GALVANIZED STEEL PIPE ARCHES
(5 in × 1 in CORRUGATIONS)

DESIGN LIFE - 25 YR				
SPAN × RISE (in)	**MINIMUM COVER FOR 2 tons/ft^2 (ft)**	**GAGE**	**MAXIMUM HEIGHTS OF COVER FOR CORNER BEARING PRESSURES IN tons/ft^2 (ft)**	
			2 tons	**3 tons**
53 × 41	1.5	12	10	15
60 × 46	1.5	12	18	27
66 × 51	1.5	12	18	27
73 × 55	1.5	12	17	26
81 × 59	1.5	12	15	22
87 × 63	1.5	12	14	22
95 × 67	1.5	12	14	22
103 × 71	1.5	12	14	21
112 × 75	1.5	12	14	21
117 × 79	1.5	12	14	21
128 × 83	1.5	12	14	21
137 × 87	1.5	12	13	20
142 × 91	1.5	10	13	20

DESIGN LIFE - 50 YR				
SPAN × RISE (in)	**MINIMUM COVER FOR 2 tons/ft^2 (ft)**	**GAGE**	**MAXIMUM HEIGHTS OF COVER FOR CORNER BEARING PRESSURES IN tons/ft^2 (ft)**	
			2 tons	**3 tons**
53 × 41	3	12	9	9
60 × 46	3.5	12	7	7
66 × 51	4.5	12	5.5	5.5
142 × 91	1.5	10	13	15

TABLE 10.B.20 (METRIC)
ALLOWABLE FILL HEIGHTS FOR
CORRUGATED ALUMINIZED STEEL PIPE ARCHES
(68 mm × 13 mm CORRUGATIONS)

DESIGN LIFE - 25 YR				
SPAN × RISE (mm)	**MINIMUM COVER FOR 20 tonne/m² (m)**	**THICKNESS (mm)**	**MAXIMUM HEIGHTS OF COVER FOR CORNER BEARING PRESSURES IN tonne/m² (m)**	
			20 tonne	**30 tonne**
530 × 380	0.5	2.01 - 1.63	3.1	5.0
610 × 460	0.5	2.77 - 2.01 1.63	3.1	5.0
710 × 510	0.5	2.77 - 2.01 1.63	3.1	5.0
885 × 610	0.5	2.77 - 2.01 1.63	3.1	5.0
1060 × 740	0.5	3.51 - 2.77 2.01 - 1.63	3.1	5.0
1240 × 840	0.5	3.51 - 2.77 2.01 - 1.63	3.1	5.0
1440 × 970	0.5	3.51 - 2.77 2.01	3.1	5.0
1620 × 1100	0.5	3.51 - 2.77 2.01	3.1	5.0
1800 × 1200	0.5	3.51 - 2.77	3.1	5.0
1950 × 1320	0.5	3.51 - 2.77	3.1	5.0
2100 × 1450	0.5	3.51	3.1	5.0

DESIGN LIFE - 50 YR				
SPAN × RISE (mm)	**MINIMUM COVER FOR 20 tonne/m² (m)**	**THICKNESS (mm)**	**MAXIMUM HEIGHTS OF COVER FOR CORNER BEARING PRESSURES IN tonne/m² (m)**	
			20 tonne	**30 tonne**
530 × 380	0.5	2.01 - 1.63	3.1	5.0
610 × 460	0.5	2.77 - 2.01 1.63	3.1	5.0
710 × 510	0.5	2.77 - 2.01 1.63	3.1	5.0
885 × 610	0.5	2.77 - 2.01 1.63	3.1	5.0
1060 × 740	0.6	1.63	3.1	5.0
	0.5	3.51 - 2.77 2.01	3.1	5.0
1240 × 840	0.8	1.63	3.1	5.0
	0.5	3.51 - 2.77 2.01	3.1	5.0
1440 × 970	0.5	3.51 - 2.77 2.01	3.1	5.0
1620 × 1100	0.5	3.51 - 2.77 2.01	3.1	5.0
1800 × 1200	0.5	3.51 - 2.77	3.1	5.0
1950 × 1320	0.5	3.51 - 2.77	3.1	5.0
2100 × 1450	0.5	3.51	3.1	5.0

TABLE 10.B.20 (METRIC) (CONTINUED)
ALLOWABLE FILL HEIGHTS FOR
CORRUGATED ALUMINIZED STEEL PIPE ARCHES
(68 mm × 13 mm CORRUGATIONS)

DESIGN LIFE - 100 YR				
SPAN × RISE (mm)	**MINIMUM COVER FOR 20 tonne/m^2 (m)**	**THICKNESS (mm)**	**MAXIMUM HEIGHTS OF COVER FOR CORNER BEARING PRESSURES IN tonne/m^2 (m)**	
			20 tonne	**30 tonne**
610 × 460	0.8	2.77	3.1	3.1
710 × 510	0.9	2.77	2.4	2.4
885 × 610	1.4	2.77	1.5	1.5
1060 × 740	0.5	3.51	3.1	5.0
1240 × 840	0.5	3.51	3.1	5.0
1440 × 970	0.5	3.51	3.1	5.0
1620 × 1100	0.5	3.51	3.1	5.0
1800 × 1200	0.5	3.51	3.1	5.0
1950 × 1320	0.5	3.51	3.1	5.0
2100 × 1450	0.5	3.51	3.1	5.0

TABLE 10.B.20 (ENGLISH)
ALLOWABLE FILL HEIGHTS FOR
CORRUGATED ALUMINIZED STEEL PIPE ARCHES
(2 2/3 in × 1/2 in CORRUGATIONS)

DESIGN LIFE - 25 YR				
SPAN × RISE (in)	**MINIMUM COVER FOR 2 tons/ft^2 (ft)**	**GAGE**	**MAXIMUM HEIGHTS OF COVER FOR CORNER BEARING PRESSURES IN tons/ft^2 (ft)**	
			2 tons	**3 tons**
21 × 15	1.5	12-14-16	10	16
24 × 18	1.5	12-14-16	10	16
28 × 20	1.5	12-14-16	10	16
35 × 24	1.5	12-14-16	10	16
42 × 29	1.5	10-12-14-16	10	16
49 × 33	1.5	10-12-14-16	10	16
57 × 38	1.5	10-12-14	10	16
64 × 43	1.5	10-12-14	10	16
71 × 47	1.5	10-12	10	16
77 × 52	1.5	10-12	10	16
83 × 57	1.5	10	10	16

DESIGN LIFE - 50 YR				
SPAN × RISE (in)	**MINIMUM COVER FOR 2 tons/ft^2 (ft)**	**GAGE**	**MAXIMUM HEIGHTS OF COVER FOR CORNER BEARING PRESSURES IN tons/ft^2 (ft)**	
			2 tons	**3 tons**
21 × 15	1.5	14 - 16	10	16
24 × 18	1.5	12 - 14 - 16	10	16
28 × 20	1.5	12 - 14 - 16	10	16
35 × 24	1.5	12 - 14 - 16	10	16
42 × 29	2	16	10	16
	1.5	10 - 12 - 14	10	16
49 × 33	2.5	16	10	16
	1.5	10 - 12 - 14	10	16
57 × 38	1.5	10 - 12 - 14	10	16
64 × 43	1.5	10 - 12 - 14	10	16
71 × 47	1.5	10 - 12	10	16
77 × 52	1.5	10 - 12	10	16
83 × 57	1.5	10	10	16

DESIGN LIFE - 100 YR				
SPAN × RISE (in)	**MINIMUM COVER FOR 2 tons/ft^2 (ft)**	**GAGE**	**MAXIMUM HEIGHTS OF COVER FOR CORNER BEARING PRESSURES IN tons/ft^2 (ft)**	
			2 tons	**3 tons**
24 × 18	2.5	12	10	10
28 × 20	3	12	8	8
35 × 24	4.5	12	5	5
42 × 29	1.5	10	10	16
49 × 33	1.5	10	10	16
57 × 38	1.5	10	10	16
64 × 43	1.5	10	10	16
71 × 47	1.5	10	10	16
77 × 52	1.5	10	10	16
83 × 57	1.5	10	10	16

TABLE 10.B.21 (METRIC)
ALLOWABLE FILL HEIGHTS FOR
CORRUGATED ALUMINIZED STEEL PIPE ARCHES
(75 mm × 25 mm CORRUGATIONS)

DESIGN LIFE - 25 YR				
SPAN × RISE (mm)	**MINIMUM COVER FOR 20 tonne/m² (m)**	**THICKNESS (mm)**	**MAXIMUM HEIGHTS OF COVER FOR CORNER BEARING PRESSURES IN tonne/m² (m)**	
			20 tonne	**30 tonne**
1340 × 1050	0.5	3.51 - 2.77 2.01	3.1	4.6
1520 × 1170	0.5	3.51 - 2.77 2.01	5.2	8.2
1670 × 1300	0.5	3.51 - 2.77 2.01	5.2	8.2
1850 × 1400	0.5	3.51 - 2.77 2.01	5.2	7.9
2050 × 1500	0.5	3.51 - 2.77 2.01	4.3	6.7
2200 × 1620	0.5	3.51 - 2.77 2.01	4.3	6.7
2400 × 1720	0.5	3.51 - 2.77 2.01	4.3	6.7
2600 × 1820	0.5	3.51 - 2.77 2.01	4.3	6.4
2840 × 1920	0.5	3.51 - 2.77 2.01	4.3	6.4
2970 × 2020	0.5	3.51 - 2.77	4.3	6.4
3240 × 2120	0.5	3.51 - 2.77	4.0	6.4
3470 × 2220	0.5	3.51 - 2.77	4.0	6.1
3600 × 2320	0.5	3.51	4.0	6.1

DESIGN LIFE - 50 YR				
SPAN × RISE (mm)	**MINIMUM COVER FOR 20 tonne/m² (m)**	**THICKNESS (mm)**	**MAXIMUM HEIGHTS OF COVER FOR CORNER BEARING PRESSURES IN tonne/m² (m)**	
			20 tonne	**30 tonne**
1340 × 1050	0.5	3.51 - 2.77 2.01	3.0	4.6
1520 × 1170	0.5	3.51 - 2.77 2.01	5.2	8.2
1670 × 1300	0.5	3.51 - 2.77 2.01	5.2	8.2
1850 × 1400	0.5	3.51 - 2.77 2.01	5.2	7.9
2050 × 1500	0.5	3.51 - 2.77 2.01	4.3	6.7
2200 × 1620	0.5	3.51 - 2.77 2.01	4.3	6.7
2400 × 1720	0.5	3.51 - 2.77 2.01	4.3	6.7
2600 × 1820	0.5	3.51 - 2.77 2.01	4.3	6.4
2840 × 1920	0.6	2.01	4.3	6.4
	0.5	3.51 - 2.77	4.3	6.4
2970 × 2020	0.5	3.51 - 2.77	4.3	6.4
3240 × 2120	0.5	3.51 - 2.77	4.0	6.4
3470 × 2220	0.5	3.51 - 2.77	4.0	6.1
3600 × 2320	0.5	3.51	4.0	6.1

TABLE 10.B.21 (METRIC) (CONTINUED)
ALLOWABLE FILL HEIGHTS FOR
CORRUGATED ALUMINIZED STEEL PIPE ARCHES
(75 mm × 25 mm CORRUGATIONS)

DESIGN LIFE - 100 YR				
SPAN × RISE (mm)	**MINIMUM COVER FOR 20 tonne/m^2 (m)**	**THICKNESS (mm)**	**MAXIMUM HEIGHTS OF COVER FOR CORNER BEARING PRESSURES IN tonne/m^2 (m)**	
			20 tonne	**30 tonne**
1340 × 1050	0.5	3.51	3.0	4.6
1520 × 1170	0.5	3.51	5.2	8.2
1670 × 1300	0.5	3.51	5.2	8.2
1850 × 1400	0.5	3.51	5.2	7.9
2050 × 1500	0.5	3.51	4.3	6.7
2200 × 1620	0.5	3.51	4.3	6.7
2400 × 1720	0.5	3.51	4.3	6.7
2600 × 1820	0.5	3.51	4.3	6.4
2840 × 1920	0.5	3.51	4.3	6.4
2970 × 2020	0.5	3.51	4.3	6.4
3240 × 2120	0.5	3.51	4.0	6.4
3470 × 2220	0.5	3.51	4.0	6.1
3600 × 2320	0.5	3.51	4.0	6.1

TABLE 10.B.21 (ENGLISH)
ALLOWABLE FILL HEIGHTS FOR
CORRUGATED ALUMINIZED STEEL PIPE ARCHES
(3 in × 1 in CORRUGATIONS)

DESIGN LIFE - 25 YR				
SPAN × RISE (in)	**MINIMUM COVER FOR 2 tons/ft^2 (ft)**	**GAGE**	**MAXIMUM HEIGHTS OF COVER FOR CORNER BEARING PRESSURES IN tons/ft^2 (ft)**	
			2 tons	**3 tons**
53 × 41	1.5	10 - 12 - 14	10	15
60 × 46	1.5	10 - 12 - 14	17	27
66 × 51	1.5	10 - 12 - 14	17	27
73 × 55	1.5	10 - 12 - 14	17	26
81 × 59	1.5	10 - 12 - 14	14	22
87 × 63	1.5	10 - 12 - 14	14	22
95 × 67	1.5	10 - 12 - 14	14	22
103 × 71	1.5	10 - 12 - 14	14	21
112 × 75	1.5	10 - 12 - 14	14	21
117 × 79	1.5	10 - 12	14	21
128 × 83	1.5	10 - 12	13	21
137 × 87	1.5	10 - 12	13	20
142 × 91	1.5	10	13	20

DESIGN LIFE - 50 YR				
SPAN × RISE (in)	**MINIMUM COVER FOR 2 tons/ft^2 (ft)**	**GAGE**	**MAXIMUM HEIGHTS OF COVER FOR CORNER BEARING PRESSURES IN tons/ft^2 (ft)**	
			2 tons	**3 tons**
53 × 41	1.5	10 - 12 - 14	10	15
60 × 46	1.5	10 - 12 - 14	17	27
66 × 51	1.5	10 - 12 - 14	17	27
73 × 55	1.5	10 - 12 - 14	17	26
81 × 59	1.5	10 - 12 - 14	14	22
87 × 63	1.5	10 - 12 - 14	14	22
95 × 67	1.5	10 - 12 - 14	14	22
103 × 71	1.5	10 - 12 - 14	14	21
112 × 75	2	14	14	21
	1.5	10 - 12	14	21
117 × 79	1.5	10 - 12	14	21
128 × 83	1.5	10 - 12	13	21
137 × 87	1.5	10 - 12	13	20
142 × 91	1.5	10	13	20

DESIGN LIFE - 100 YR				
SPAN × RISE (in)	**MINIMUM COVER FOR 2 tons/ft^2 (ft)**	**GAGE**	**MAXIMUM HEIGHTS OF COVER FOR CORNER BEARING PRESSURES IN tons/ft^2 (ft)**	
			2 tons	**3 tons**
53 × 41	1.5	10	10	15
60 × 46	1.5	10	17	27
66 × 51	1.5	10	17	27
73 × 55	1.5	10	17	26
81 × 59	1.5	10	14	22
87 × 63	1.5	10	14	22
95 × 67	1.5	10	14	22
103 × 71	1.5	10	14	21
112 × 75	1.5	10	14	21
117 × 79	1.5	10	14	21
128 × 83	1.5	10	13	21
137 × 87	1.5	10	13	20
142 × 91	1.5	10	13	20

TABLE 10.B.22 (METRIC)
ALLOWABLE FILL HEIGHTS FOR
CORRUGATED ALUMINIZED STEEL PIPE ARCHES
(125 mm × 25 mm CORRUGATIONS)

DESIGN LIFE - 25 YR				
SPAN × RISE (mm)	**MINIMUM COVER FOR 20 tonne/m^2 (m)**	**THICKNESS (mm)**	**MAXIMUM HEIGHTS OF COVER FOR CORNER BEARING PRESSURES IN tonne/m^2 (m)**	
			20 tonne	**30 tonne**
2050 × 1500	0.5	3.51 - 2.77	4.3	6.7
2200 × 1620	0.5	3.51 - 2.77	4.3	6.7
2400 × 1720	0.5	3.51 - 2.77	4.3	6.7
2600 × 1820	0.5	3.51 - 2.77	4.3	6.4
2840 × 1920	0.5	3.51 - 2.77	4.3	6.4
2970 × 2020	0.5	3.51 - 2.77	4.3	6.4
3240 × 2120	0.5	3.51 - 2.77	4.0	6.4
3470 × 2220	0.5	3.51 - 2.77	4.0	6.1
3600 × 2320	0.5	3.51	4.0	6.1

DESIGN LIFE - 50 YR				
SPAN × RISE (mm)	**MINIMUM COVER FOR 20 tonne/m^2 (m)**	**THICKNESS (mm)**	**MAXIMUM HEIGHTS OF COVER FOR CORNER BEARING PRESSURES IN tonne/m^2 (m)**	
			20 tonne	**30 tonne**
2050 × 1500	0.5	3.51 - 2.77	4.3	6.7
2200 × 1620	0.5	3.51 - 2.77	4.3	6.7
2400 × 1720	0.5	3.51 - 2.77	4.3	6.7
2600 × 1820	0.5	3.51 - 2.77	4.3	6.4
2840 × 1920	0.5	3.51 - 2.77	4.3	6.4
2970 × 2020	0.5	3.51 - 2.77	4.3	6.4
3240 × 2120	0.5	3.51 - 2.77	4.0	6.4
3470 × 2220	0.5	3.51 - 2.77	4.0	6.1
3600 × 2320	0.5	3.51	4.0	6.1

DESIGN LIFE - 100 YR				
SPAN × RISE (mm)	**MINIMUM COVER FOR 20 tonne/m^2 (m)**	**THICKNESS (mm)**	**MAXIMUM HEIGHTS OF COVER FOR CORNER BEARING PRESSURES IN tonne/m^2 (m)**	
			20 tonne	**30 tonne**
2050 × 1500	0.5	3.51	4.3	6.7
2200 × 1620	0.5	3.51	4.3	6.7
2400 × 1720	0.5	3.51	4.3	6.7
2600 × 1820	0.5	3.51	4.3	6.4
2840 × 1920	0.5	3.51	4.3	5.8
2970 × 2020	0.5	3.51	4.3	5.5
3240 × 2120	0.5	3.51	4.0	4.9
3470 × 2220	0.6	3.51	4.0	4.6
3600 × 2320	0.6	3.51	4.0	4.6

TABLE 10.B.22 (ENGLISH)
ALLOWABLE FILL HEIGHTS FOR
CORRUGATED ALUMINIZED STEEL PIPE ARCHES
(5 in × 1 in CORRUGATIONS)

DESIGN LIFE - 25 YR				
SPAN × RISE (in)	**MINIMUM COVER FOR 2 tons/ft^2 (ft)**	**GAGE**	**MAXIMUM HEIGHTS OF COVER FOR CORNER BEARING PRESSURES IN tons/ft^2 (ft)**	
			2 tons	**3 tons**
81 × 59	1.5	10 - 12	14	22
87 × 63	1.5	10 - 12	14	22
95 × 67	1.5	10 - 12	14	22
103 × 71	1.5	10 - 12	14	21
112 × 75	1.5	10 - 12	14	21
117 × 79	1.5	10 - 12	14	21
128 × 83	1.5	10 - 12	13	21
137 × 87	1.5	10 - 12	13	20
142 × 91	1.5	10	13	20

DESIGN LIFE - 50 YR				
SPAN × RISE (in)	**MINIMUM COVER FOR 2 tons/ft^2 (ft)**	**GAGE**	**MAXIMUM HEIGHTS OF COVER FOR CORNER BEARING PRESSURES IN tons/ft^2 (ft)**	
			2 tons	**3 tons**
81 × 59	1.5	10 - 12	14	22
87 × 63	1.5	10 - 12	14	22
95 × 67	1.5	10 - 12	14	22
103 × 71	1.5	10 - 12	14	21
112 × 75	1.5	10 - 12	14	21
117 × 79	1.5	10 - 12	14	21
128 × 83	1.5	10 - 12	13	21
137 × 87	1.5	10 - 12	13	20
142 × 91	1.5	10	13	20

DESIGN LIFE - 100 YR				
SPAN × RISE (in)	**MINIMUM COVER FOR 2 tons/ft^2 (ft)**	**GAGE**	**MAXIMUM HEIGHTS OF COVER FOR CORNER BEARING PRESSURES IN tons/ft^2 (ft)**	
			2 tons	**3 tons**
81 × 59	1.5	10	14	22
87 × 63	1.5	10	14	22
95 × 67	1.5	10	14	22
103 × 71	1.5	10	14	21
112 × 75	1.5	10	14	19
117 × 79	1.5	10	14	18
128 × 83	1.5	10	13	16
137 × 87	2	10	13	15
142 × 91	2	10	13	15

TABLE 10.B.23 (METRIC)
ALLOWABLE FILL HEIGHTS FOR
CORRUGATED GALVANIZED STEEL PIPE ARCHES
(68 mm × 13 mm CORRUGATIONS)

POLYMER COATED (≤ 1.5 m/s)*

DESIGN LIFE - 25 YR				
SPAN × RISE (mm)	**MINIMUM COVER FOR 20 tonne/m² (m)**	**THICKNESS (mm)**	**MAXIMUM HEIGHTS OF COVER FOR CORNER BEARING PRESSURES IN tonne/m² (m)**	
			20 tonne	**30 tonne**
530 × 380	0.5	1.63	3.1	5.0
610 × 460	0.5	1.63	3.1	5.0
710 × 510	0.5	1.63	3.1	5.0
885 × 610	0.5	1.63	3.1	5.0
1060 × 740	0.5	1.63	3.1	5.0
1240 × 840	0.5	2.01	3.1	5.0
1440 × 970	0.5	2.77	3.1	5.0
1620 × 1100	0.5	2.77	3.1	5.0
1800 × 1200	0.5	3.51	3.1	5.0
1950 × 1320	0.5	4.27	3.1	5.0
2100 × 1450	0.5	4.27	3.1	5.0

DESIGN LIFE - 50 YR				
SPAN × RISE (mm)	**MINIMUM COVER FOR 20 tonne/m² (m)**	**THICKNESS (mm)**	**MAXIMUM HEIGHTS OF COVER FOR CORNER BEARING PRESSURES IN tonne/m² (m)**	
			20 tonne	**30 tonne**
530 × 380	0.8	1.63	3.1	3.1
610 × 460	0.9	1.63	2.4	2.4
710 × 510	1.2	1.63	1.7	1.7
1240 × 840	0.5	2.01	3.1	5.0
1440 × 970	0.5	2.77	3.1	5.0
1620 × 1100	0.5	2.77	3.1	5.0
1800 × 1200	0.5	3.51	3.1	5.0
1950 × 1320	0.5	4.27	3.1	5.0
2100 × 1450	0.5	4.27	3.1	5.0

* Design Flow Velocity does not exceed 1.5 m/s, low abrasive (minimal bedload) environment.

TABLE 10.B.23 (ENGLISH)
ALLOWABLE FILL HEIGHTS FOR
CORRUGATED GALVANIZED STEEL PIPE ARCHES
(2 2/3 in × 1/2 in CORRUGATIONS)

POLYMER COATED (≤ 5 ft/s)*

DESIGN LIFE - 25 YR				
SPAN × RISE (in)	**MINIMUM COVER FOR 2 tons/ft^2 (ft)**	**GAGE**	**MAXIMUM HEIGHTS OF COVER FOR CORNER BEARING PRESSURES IN tons/ft^2 (ft)**	
			2 tons	**3 tons**
21 × 15	1.5	16	10	16
24 × 18	1.5	16	10	16
28 × 20	1.5	16	10	16
35 × 24	1.5	16	10	16
42 × 29	1.5	16	10	16
49 × 33	1.5	14	10	16
57 × 38	1.5	12	10	16
64 × 43	1.5	12	10	16
71 × 47	1.5	10	10	16
77 × 52	1.5	8	10	16
83 × 57	1.5	8	10	16

DESIGN LIFE - 50 YR				
SPAN × RISE (in)	**MINIMUM COVER FOR 2 tons/ft^2 (ft)**	**GAGE**	**MAXIMUM HEIGHTS OF COVER FOR CORNER BEARING PRESSURES IN tons/ft^2 (ft)**	
			2 tons	**3 tons**
21 × 15	2.5	16	10	10
24 × 18	3	16	8	8
28 × 20	4	16	5.5	5.5
49 × 33	1.5	14	10	16
57 × 38	1.5	12	10	16
64 × 43	1.5	12	10	16
71 × 47	1.5	10	10	16
77 × 52	1.5	8	10	16
83 × 57	1.5	8	10	16

* Design Flow Velocity does not exceed 5 ft/s, low abrasive (minimal bedload) environment.

TABLE 10.B.24 (METRIC)
ALLOWABLE FILL HEIGHTS FOR
CORRUGATED GALVANIZED STEEL PIPE ARCHES
(75 mm × 25 mm CORRUGATIONS)

POLYMER COATED (≤ 1.5 m/s)*

DESIGN LIFE - 25 YR				
SPAN × RISE (mm)	**MINIMUM COVER FOR 20 tonne/m² (m)**	**THICKNESS (mm)**	**MAXIMUM HEIGHTS OF COVER FOR CORNER BEARING PRESSURES IN tonne/m² (m)**	
			20 tonne	**30 tonne**
1340 × 1050	0.5	2.01	3.1	4.6
1520 × 1170	0.5	2.01	5.5	8.2
1670 × 1300	0.5	2.01	5.5	8.2
1850 × 1400	0.5	2.01	5.2	7.9
2050 × 1500	0.5	2.01	4.6	6.7
2200 × 1620	0.5	2.01	4.3	6.7
2400 × 1720	0.5	2.01	4.3	6.7
2600 × 1820	0.5	2.01	4.3	6.4
2840 × 1920	0.5	2.01	4.3	6.4
2970 × 2020	0.5	2.77	4.3	6.4
3240 × 2120	0.5	2.77	4.3	6.4
3470 × 2220	0.5	2.77	4.0	6.1
3600 × 2320	0.5	3.51	4.0	6.1

DESIGN LIFE - 50 YR				
SPAN × RISE (mm)	**MINIMUM COVER FOR 20 tonne/m² (m)**	**THICKNESS (mm)**	**MAXIMUM HEIGHTS OF COVER FOR CORNER BEARING PRESSURES IN tonne/m² (m)**	
			20 tonne	**30 tonne**
1340 × 1050	0.5	2.01	3.1	4.6
1520 × 1170	0.5	2.01	5.5	5.8
1670 × 1300	0.5	2.01	5.5	5.5
1850 × 1400	0.5	2.01	5.0	5.0
2050 × 1500	0.5	2.01	4.3	4.3
2200 × 1620	0.6	2.01	4.0	4.0
2400 × 1720	0.6	2.01	3.7	3.7
2600 × 1820	0.8	2.01	3.4	3.4
2840 × 1920	0.8	2.01	3.1	3.1
2970 × 2020	0.5	2.77	4.3	6.4
3240 × 2120	0.5	2.77	4.3	6.4
3470 × 2220	0.5	2.77	4.0	6.1
3600 × 2320	0.5	3.51	4.0	6.1

* Design Flow Velocity does not exceed 1.5 m/s, low abrasive (minimal bedload) environment.

TABLE 10.B.24 (ENGLISH)
ALLOWABLE FILL HEIGHTS FOR
CORRUGATED GALVANIZED STEEL PIPE ARCHES
(3 in × 1 in CORRUGATIONS)

POLYMER COATED (≤ 5 ft/s)*

DESIGN LIFE - 25 YR				
SPAN × RISE (in)	**MINIMUM COVER FOR 2 tons/ft^2 (ft)**	**GAGE**	**MAXIMUM HEIGHTS OF COVER FOR CORNER BEARING PRESSURES IN tons/ft^2 (ft)**	
			2 tons	**3 tons**
53 × 41	1.5	14	10	15
60 × 46	1.5	14	18	27
66 × 51	1.5	14	18	27
73 × 55	1.5	14	17	26
81 × 59	1.5	14	15	22
87 × 63	1.5	14	14	22
95 × 67	1.5	14	14	22
103 × 71	1.5	14	14	21
112 × 75	1.5	14	14	21
117 × 79	1.5	12	14	21
128 × 83	1.5	12	14	21
137 × 87	1.5	12	13	20
142 × 91	1.5	10	13	20

DESIGN LIFE - 50 YR				
SPAN × RISE (in)	**MINIMUM COVER FOR 2 tons/ft^2 (ft)**	**GAGE**	**MAXIMUM HEIGHTS OF COVER FOR CORNER BEARING PRESSURES IN tons/ft^2 (ft)**	
			2 tons	**3 tons**
53 × 41	1.5	14	10	15
60 × 46	1.5	14	18	19
66 × 51	1.5	14	18	18
73 × 55	1.5	14	16	16
81 × 59	1.5	14	14	14
87 × 63	2	14	13	13
95 × 67	2	14	12	12
103 × 71	2.5	14	11	11
112 × 75	2.5	14	10	10
117 × 79	1.5	12	14	21
128 × 83	1.5	12	14	21
137 × 87	1.5	12	13	20
142 × 91	1.5	10	13	20

* Design Flow Velocity does not exceed 5 ft/s, low abrasive (minimal bedload) environment.

TABLE 10.B.25 (METRIC)
ALLOWABLE FILL HEIGHTS FOR CORRUGATED GALVANIZED STEEL PIPE ARCHES (125 mm × 25 mm CORRUGATIONS)

POLYMER COATED (≤ 1.5 m/s)*

DESIGN LIFE - 25 YR				
SPAN × RISE (mm)	**MINIMUM COVER FOR 20 tonne/m² (m)**	**THICKNESS (mm)**	**MAXIMUM HEIGHTS OF COVER FOR CORNER BEARING PRESSURES IN tonne/m² (m)**	
			20 tonne	**30 tonne**
1340 × 1050	0.5	2.77	3.1	4.6
1520 × 1170	0.5	2.77	5.5	8.2
1670 × 1300	0.5	2.77	5.5	8.2
1850 × 1400	0.5	2.77	5.2	7.9
2050 × 1500	0.5	2.77	4.6	6.7
2200 × 1620	0.5	2.77	4.3	6.7
2400 × 1720	0.5	2.77	4.3	6.7
2600 × 1820	0.5	2.77	4.3	6.4
2840 × 1920	0.5	2.77	4.3	6.4
2970 × 2020	0.5	2.77	4.3	6.4
3240 × 2120	0.5	2.77	4.3	6.4
3470 × 2220	0.5	2.77	4.0	6.1
3600 × 2320	0.5	3.51	4.0	6.1

DESIGN LIFE - 50 YR				
SPAN × RISE (mm)	**MINIMUM COVER FOR 20 tonne/m² (m)**	**THICKNESS (mm)**	**MAXIMUM HEIGHTS OF COVER FOR CORNER BEARING PRESSURES IN tonne/m² (m)**	
			20 tonne	**30 tonne**
1340 × 1050	0.5	2.77	3.1	4.6
1520 × 1170	0.5	2.77	5.5	8.2
1670 × 1300	0.5	2.77	5.5	8.2
1850 × 1400	0.5	2.77	5.2	7.9
2050 × 1500	0.5	2.77	4.6	6.7
2200 × 1620	0.5	2.77	4.3	6.7
2400 × 1720	0.5	2.77	4.3	6.7
2600 × 1820	0.5	2.77	4.3	6.4
2840 × 1920	0.5	2.77	4.3	6.4
2970 × 2020	0.5	2.77	4.3	6.4
3240 × 2120	0.5	2.77	4.3	6.4
3470 × 2220	0.5	2.77	4.0	5.8
3600 × 2320	0.5	3.51	4.0	6.1

* Design Flow Velocity does not exceed 1.5 m/s, low abrasive (minimal bedload) environment.

TABLE 10.B.25 (ENGLISH)
ALLOWABLE FILL HEIGHTS FOR
CORRUGATED GALVANIZED STEEL PIPE ARCHES
(5 in × 1 in CORRUGATIONS)

POLYMER COATED (≤ 5 ft/s)*

DESIGN LIFE - 25 YR				
SPAN × RISE (in)	**MINIMUM COVER FOR 2 tons/ft^2 (ft)**	**GAGE**	**MAXIMUM HEIGHTS OF COVER FOR CORNER BEARING PRESSURES IN tons/ft^2 (ft)**	
			2 tons	**3 tons**
53 × 41	1.5	12	10	15
60 × 46	1.5	12	18	27
66 × 51	1.5	12	18	27
73 × 55	1.5	12	17	26
81 × 59	1.5	12	15	22
87 × 63	1.5	12	14	22
95 × 67	1.5	12	14	22
103 × 71	1.5	12	14	21
112 × 75	1.5	12	14	21
117 × 79	1.5	12	14	21
128 × 83	1.5	12	14	21
137 × 87	1.5	12	13	20
142 × 91	1.5	10	13	20

DESIGN LIFE - 50 YR				
SPAN × RISE (in)	**MINIMUM COVER FOR 2 tons/ft^2 (ft)**	**GAGE**	**MAXIMUM HEIGHTS OF COVER FOR CORNER BEARING PRESSURES IN tons/ft^2 (ft)**	
			2 tons	**3 tons**
53 × 41	1.5	12	10	15
60 × 46	1.5	12	18	27
66 × 51	1.5	12	18	27
73 × 55	1.5	12	17	26
81 × 59	1.5	12	15	22
87 × 63	1.5	12	14	22
95 × 67	1.5	12	14	22
103 × 71	1.5	12	14	21
112 × 75	1.5	12	14	21
117 × 79	1.5	12	14	21
128 × 83	1.5	12	14	21
137 × 87	1.5	12	13	19
142 × 91	1.5	10	13	20

* Design Flow Velocity does not exceed 5 ft/s, low abrasive (minimal bedload) environment.

TABLE 10.B.26 (METRIC)
ALLOWABLE FILL HEIGHTS FOR
CORRUGATED GALVANIZED STEEL PIPE ARCHES
(68 mm × 13 mm CORRUGATIONS)

POLYMER COATED (> 1.5 m/s)*

DESIGN LIFE - 25 YR				
SPAN × RISE (mm)	**MINIMUM COVER FOR 20 tonne/m² (m)**	**THICKNESS (mm)**	**MAXIMUM HEIGHTS OF COVER FOR CORNER BEARING PRESSURES IN tonne/m² (m)**	
			20 tonne	**30 tonne**
530 × 380	0.5	1.63	3.1	5.0
610 × 460	0.5	1.63	3.1	5.0
710 × 510	0.5	1.63	3.1	5.0
885 × 610	0.5	1.63	3.1	5.0
1060 × 740	0.5	1.63	3.1	5.0
1240 × 840	0.5	2.01	3.1	5.0
1440 × 970	0.5	2.77	3.1	5.0
1620 × 1100	0.5	2.77	3.1	5.0
1800 × 1200	0.5	3.51	3.1	5.0
1950 × 1320	0.5	4.27	3.1	5.0
2100 × 1450	0.5	4.27	3.1	5.0

DESIGN LIFE - 50 YR				
SPAN × RISE (mm)	**MINIMUM COVER FOR 20 tonne/m² (m)**	**THICKNESS (mm)**	**MAXIMUM HEIGHTS OF COVER FOR CORNER BEARING PRESSURES IN tonne/m² (m)**	
			20 tonne	**30 tonne**
1440 × 970	0.5	2.77	3.1	5.0
1620 × 1100	0.5	2.77	3.1	5.0
1800 × 1200	0.5	3.51	3.1	5.0
1950 × 1320	0.5	4.27	3.1	5.0
2100 × 1450	0.5	4.27	3.1	5.0

* Design Flow Velocity exceeds 1.5 m/s.

TABLE 10.B.26 (ENGLISH)
ALLOWABLE FILL HEIGHTS FOR
CORRUGATED GALVANIZED STEEL PIPE ARCHES
(2 2/3 in × 1/2 in CORRUGATIONS)

POLYMER COATED (> 5 ft/s)*

DESIGN LIFE - 25 YR				
SPAN × RISE (in)	**MINIMUM COVER FOR 2 tons/ft^2 (ft)**	**GAGE**	**MAXIMUM HEIGHTS OF COVER FOR CORNER BEARING PRESSURES IN tons/ft^2 (ft)**	
			2 tons	**3 tons**
21 × 15	1.5	16	10	16
24 × 18	1.5	16	10	16
28 × 20	1.5	16	10	16
35 × 24	1.5	16	10	16
42 × 29	1.5	16	10	16
49 × 33	1.5	14	10	16
57 × 38	1.5	12	10	16
64 × 43	1.5	12	10	16
71 × 47	1.5	10	10	16
77 × 52	1.5	8	10	16
83 × 57	1.5	8	10	16

DESIGN LIFE - 50 YR				
SPAN × RISE (in)	**MINIMUM COVER FOR 2 tons/ft^2 (ft)**	**GAGE**	**MAXIMUM HEIGHTS OF COVER FOR CORNER BEARING PRESSURES IN tons/ft^2 (ft)**	
			2 tons	**3 tons**
57 × 38	1.5	12	10	16
64 × 43	1.5	12	10	16
71 × 47	1.5	10	10	16
77 × 52	1.5	8	10	16
83 × 57	1.5	8	10	16

* Design Flow Velocity exceeds 5 ft/s.

TABLE 10.B.27 (METRIC)
ALLOWABLE FILL HEIGHTS FOR
CORRUGATED GALVANIZED STEEL PIPE ARCHES
(75 mm × 25 mm CORRUGATIONS)

POLYMER COATED (> 1.5 m/s)*

DESIGN LIFE - 25 YR				
SPAN × RISE (mm)	**MINIMUM COVER FOR 20 tonne/m² (m)**	**THICKNESS (mm)**	**MAXIMUM HEIGHTS OF COVER FOR CORNER BEARING PRESSURES IN tonne/m² (m)**	
			20 tonne	**30 tonne**
1340 × 1050	0.5	2.01	3.1	4.6
1520 × 1170	0.5	2.01	5.5	8.2
1670 × 1300	0.5	2.01	5.5	8.2
1850 × 1400	0.5	2.01	5.2	7.9
2050 × 1500	0.5	2.01	4.6	6.7
2200 × 1620	0.5	2.01	4.3	6.7
2400 × 1720	0.5	2.01	4.3	6.7
2600 × 1820	0.5	2.01	4.3	6.4
2840 × 1920	0.5	2.01	4.3	6.4
2970 × 2020	0.5	2.77	4.3	6.4
3240 × 2120	0.5	2.77	4.3	6.4
3470 × 2220	0.5	2.77	4.0	6.1
3600 × 2320	0.5	3.51	4.0	6.1

DESIGN LIFE - 50 YR				
SPAN × RISE (mm)	**MINIMUM COVER FOR 20 tonne/m² (m)**	**THICKNESS (mm)**	**MAXIMUM HEIGHTS OF COVER FOR CORNER BEARING PRESSURES IN tonne/m² (m)**	
			20 tonne	**30 tonne**
2970 × 2020	0.5	2.77	4.3	4.6
3240 × 2120	0.5	2.77	4.3	4.3
3470 × 2220	0.5	2.77	4.0	4.0
3600 × 2320	0.5	3.51	4.0	6.1

* Design Flow Velocity exceeds 1.5 m/s.

TABLE 10.B.27 (ENGLISH)
ALLOWABLE FILL HEIGHTS FOR
CORRUGATED GALVANIZED STEEL PIPE ARCHES
(3 in × 1 in CORRUGATIONS)

POLYMER COATED (> 5 ft/s)*

DESIGN LIFE - 25 YR				
SPAN × RISE (in)	**MINIMUM COVER FOR 2 tons/ft^2 (ft)**	**GAGE**	**MAXIMUM HEIGHTS OF COVER FOR CORNER BEARING PRESSURES IN tons/ft^2 (ft)**	
			2 tons	**3 tons**
53 × 41	1.5	14	10	15
60 × 46	1.5	14	18	27
66 × 51	1.5	14	18	27
73 × 55	1.5	14	17	26
81 × 59	1.5	14	15	22
87 × 63	1.5	14	14	22
95 × 67	1.5	14	14	22
103 × 71	1.5	14	14	21
112 × 75	1.5	14	14	21
117 × 79	1.5	12	14	21
128 × 83	1.5	12	14	21
137 × 87	1.5	12	13	20
142 × 91	1.5	10	13	20

DESIGN LIFE - 50 YR				
SPAN × RISE (in)	**MINIMUM COVER FOR 2 tons/ft^2 (ft)**	**GAGE**	**MAXIMUM HEIGHTS OF COVER FOR CORNER BEARING PRESSURES IN tons/ft^2 (ft)**	
			2 tons	**3 tons**
117 × 79	1.5	12	14	15
128 × 83	1.5	12	14	14
137 × 87	2	12	13	13
142 × 91	1.5	10	13	20

* Design Flow Velocity exceeds 5 ft/s.

TABLE 10.B.28 (METRIC)
ALLOWABLE FILL HEIGHTS FOR
CORRUGATED GALVANIZED STEEL PIPE ARCHES
(125 mm × 25 mm CORRUGATIONS)

POLYMER COATED (> 1.5 m/s)*

DESIGN LIFE - 25 YR				
SPAN × RISE (mm)	**MINIMUM COVER FOR 20 tonne/m² (m)**	**THICKNESS (mm)**	**MAXIMUM HEIGHTS OF COVER FOR CORNER BEARING PRESSURES IN tonne/m² (m)**	
			20 tonne	**30 tonne**
1340 × 1050	0.5	2.77	3.1	4.6
1520 × 1170	0.5	2.77	5.5	8.2
1670 × 1300	0.5	2.77	5.5	8.2
1850 × 1400	0.5	2.77	5.2	7.9
2050 × 1500	0.5	2.77	4.6	6.7
2200 × 1620	0.5	2.77	4.3	6.7
2400 × 1720	0.5	2.77	4.3	6.7
2600 × 1820	0.5	2.77	4.3	6.4
2840 × 1920	0.5	2.77	4.3	6.4
2970 × 2020	0.5	2.77	4.3	6.4
3240 × 2120	0.5	2.77	4.3	6.4
3470 × 2220	0.5	2.77	4.0	6.1
3600 × 2320	0.5	3.51	4.0	6.1

DESIGN LIFE - 50 YR				
SPAN × RISE (mm)	**MINIMUM COVER FOR 20 tonne/m² (m)**	**THICKNESS (mm)**	**MAXIMUM HEIGHTS OF COVER FOR CORNER BEARING PRESSURES IN tonne/m² (m)**	
			20 tonne	**30 tonne**
1340 × 1050	0.5	2.77	3.1	4.6
1520 × 1170	0.5	2.77	5.5	7.9
1670 × 1300	0.5	2.77	5.5	7.3
1850 × 1400	0.5	2.77	5.2	6.7
2050 × 1500	0.5	2.77	4.6	5.8
2200 × 1620	0.5	2.77	4.3	5.5
2400 × 1720	0.5	2.77	4.3	5.0
2600 × 1820	0.5	2.77	4.3	4.6
2840 × 1920	0.5	2.77	4.3	4.3
2970 × 2020	0.6	2.77	4.0	4.0
3240 × 2120	0.6	2.77	3.7	3.7
3470 × 2220	0.6	2.77	3.4	3.4
3600 × 2320	0.5	3.51	4.0	6.1

* Design Flow Velocity exceeds 1.5 m/s.

TABLE 10.B.28 (ENGLISH)
ALLOWABLE FILL HEIGHTS FOR
CORRUGATED GALVANIZED STEEL PIPE ARCHES
(5 in × 1 in CORRUGATIONS)

POLYMER COATED (> 5 ft/s)*

DESIGN LIFE - 25 YR				
SPAN × RISE (in)	**MINIMUM COVER FOR 2 tons/ft^2 (ft)**	**GAGE**	**MAXIMUM HEIGHTS OF COVER FOR CORNER BEARING PRESSURES IN tons/ft^2 (ft)**	
			2 tons	**3 tons**
53 × 41	1.5	12	10	15
60 × 46	1.5	12	18	27
66 × 51	1.5	12	18	27
73 × 55	1.5	12	17	26
81 × 59	1.5	12	15	22
87 × 63	1.5	12	14	22
95 × 67	1.5	12	14	22
103 × 71	1.5	12	14	21
112 × 75	1.5	12	14	21
117 × 79	1.5	12	14	21
128 × 83	1.5	12	14	21
137 × 87	1.5	12	13	20
142 × 91	1.5	10	13	20

DESIGN LIFE - 50 YR				
SPAN × RISE (in)	**MINIMUM COVER FOR 2 tons/ft^2 (ft)**	**GAGE**	**MAXIMUM HEIGHTS OF COVER FOR CORNER BEARING PRESSURES IN tons/ft^2 (ft)**	
			2 tons	**3 tons**
53 × 41	1.5	12	10	15
60 × 46	1.5	12	18	26
66 × 51	1.5	12	18	24
73 × 55	1.5	12	17	22
81 × 59	1.5	12	15	19
87 × 63	1.5	12	14	18
95 × 67	1.5	12	14	16
103 × 71	1.5	12	14	15
112 × 75	1.5	12	14	14
117 × 79	2	12	13	13
128 × 83	2	12	12	12
137 × 87	2	12	11	11
142 × 91	1.5	10	13	20

* Design Flow Velocity exceeds 5 ft/s.

TABLE 10.B.29 (METRIC)
ALLOWABLE FILL HEIGHTS FOR
CORRUGATED ALUMINUM ALLOY PIPE ARCHES
(68 mm × 13 mm CORRUGATIONS)

DESIGN LIFE - 25 YR				
SPAN × RISE (mm)	**MINIMUM COVER FOR 20 tonne/m² (m)**	**THICKNESS (mm)**	**MAXIMUM HEIGHTS OF COVER FOR CORNER BEARING PRESSURES IN tonne/m² (m)**	
			20 tonne	**30 tonne**
530 × 380	0.6	1.52 - 1.91	3.1	5.0
610 × 460	0.6	1.52 - 1.91	3.1	5.0
710 × 510	0.6	1.91 - 2.67	3.1	5.0
885 × 610	0.6	1.91 - 2.67	3.1	5.0
1060 × 740	0.6	2.67 - 3.43	3.1	5.0
1240 × 840	0.6	2.67 - 3.43	3.1	5.0
1440 × 970	0.6	3.43 - 4.17	3.1	5.0
1620 × 1100	0.6	3.43 - 4.17	3.1	5.0
1800 × 1200	0.6	4.17	3.1	5.0

DESIGN LIFE - 50 YR				
SPAN × RISE (mm)	**MINIMUM COVER FOR 20 tonne/m² (m)**	**THICKNESS (mm)**	**MAXIMUM HEIGHTS OF COVER FOR CORNER BEARING PRESSURES IN tonne/m² (m)**	
			20 tonne	**30 tonne**
530 × 380	0.6	1.52 - 1.91	3.1	5.0
610 × 460	0.6	1.52 - 1.91	3.1	5.0
710 × 510	0.6	1.91 - 2.67	3.1	5.0
885 × 610	0.6	1.91 - 2.67	3.1	5.0
1060 × 740	0.6	2.67 - 3.43	3.1	5.0
1240 × 840	0.6	2.67 - 3.43	3.1	5.0
1440 × 970	0.6	3.43 - 4.17	3.1	5.0
1620 × 1100	0.6	3.43 - 4.17	3.1	5.0
1800 × 1200	0.6	4.17	3.1	5.0

DESIGN LIFE - 100 YR				
SPAN × RISE (mm)	**MINIMUM COVER FOR 20 tonne/m² (m)**	**THICKNESS (mm)**	**MAXIMUM HEIGHTS OF COVER FOR CORNER BEARING PRESSURES IN tonne/m² (m)**	
			20 tonne	**30 tonne**
1060 × 740	0.6	3.43	3.1	5.0
1240 × 840	0.6	3.43	3.1	5.0
1440 × 970	0.6	3.43 - 4.17	3.1	5.0
1620 × 1100	0.6	3.43 - 4.17	3.1	5.0
1800 × 1200	0.6	4.17	3.1	5.0

TABLE 10.B.29 (ENGLISH)
ALLOWABLE FILL HEIGHTS FOR
CORRUGATED ALUMINUM ALLOY PIPE ARCHES
(2 2/3 in × 1/2 in CORRUGATIONS)

DESIGN LIFE - 25 YR				
SPAN × RISE (in)	**MINIMUM COVER FOR 2 tons/ft^2 (ft)**	**GAGE**	**MAXIMUM HEIGHTS OF COVER FOR CORNER BEARING PRESSURES IN tons/ft^2 (ft)**	
			2 tons	**3 tons**
21 × 15	2	14 - 16	10	16
24 × 18	2	14 - 16	10	16
28 × 20	2	12 - 14	10	16
35 × 24	2	12 - 14	10	16
42 × 29	2	10 - 12	10	16
49 × 33	2	10 - 12	10	16
57 × 38	2	8 - 10	10	16
64 × 43	2	8 - 10	10	16
71 × 47	2	8	10	16

DESIGN LIFE - 50 YR				
SPAN × RISE (in)	**MINIMUM COVER FOR 2 tons/ft^2 (ft)**	**GAGE**	**MAXIMUM HEIGHTS OF COVER FOR CORNER BEARING PRESSURES IN tons/ft^2 (ft)**	
			2 tons	**3 tons**
21 × 15	2	14 - 16	10	16
24 × 18	2	14 - 16	10	16
28 × 20	2	12 - 14	10	16
35 × 24	2	12 - 14	10	16
42 × 29	2	10 - 12	10	16
49 × 33	2	10 - 12	10	16
57 × 38	2	8 - 10	10	16
64 × 43	2	8 - 10	10	16
71 × 47	2	8	10	16

DESIGN LIFE - 100 YR				
SPAN × RISE (in)	**MINIMUM COVER FOR 2 tons/ft^2 (ft)**	**GAGE**	**MAXIMUM HEIGHTS OF COVER FOR CORNER BEARING PRESSURES IN tons/ft^2 (ft)**	
			2 tons	**3 tons**
42 × 29	2	10	10	16
49 × 33	2	10	10	16
57 × 38	2	8 - 10	10	16
64 × 43	2	8 - 10	10	16
71 × 47	2	8	10	16

TABLE 10.B.30 (METRIC)
ALLOWABLE FILL HEIGHTS FOR
CORRUGATED ALUMINUM ALLOY PIPE ARCHES
(75 mm × 25 mm CORRUGATIONS)

DESIGN LIFE - 25 YR				
SPAN × RISE (mm)	**MINIMUM COVER FOR 20 tonne/m² (m)**	**THICKNESS (mm)**	**MAXIMUM HEIGHTS OF COVER FOR CORNER BEARING PRESSURES IN tonne/m² (m)**	
			20 tonne	**30 tonne**
1520 × 1170	0.5	4.17 - 3.43 2.67 - 1.91	5.2	8.2
1670 × 1300	0.5	4.17 - 3.43 2.67 - 1.91	5.2	8.2
1850 × 1400	0.5	4.17 - 3.43 2.67 - 1.91	5.2	7.9
2050 × 1500	0.5	4.17 - 3.43 2.67	4.3	6.7
2200 × 1620	0.5	4.17 - 3.43 2.67	4.3	6.7
2400 × 1720	0.5	4.17 - 3.43 2.67	4.3	6.7
2600 × 1820	0.5	4.17 - 3.43	4.3	6.4
2840 × 1920	0.5	4.17	4.3	6.4

DESIGN LIFE - 50 YR				
SPAN × RISE (mm)	**MINIMUM COVER FOR 20 tonne/m² (m)**	**THICKNESS (mm)**	**MAXIMUM HEIGHTS OF COVER FOR CORNER BEARING PRESSURES IN tonne/m² (m)**	
			20 tonne	**30 tonne**
1520 × 1170	0.5	1.91	5.2	5.8
	0.5	4.17 - 3.43 2.67	5.2	8.2
1670 × 1300	0.5	1.91	5.2	5.2
	0.5	4.17 - 3.43 2.67	5.2	8.2
1850 × 1400	0.5	1.91	4.6	4.6
	0.5	4.17 - 3.43 2.67	5.2	7.9
2050 × 1500	0.5	4.17 - 3.43 2.67	4.3	6.7
2200 × 1620	0.5	4.17 - 3.43 2.67	4.3	6.7
2400 × 1720	0.5	4.17 - 3.43 2.67	4.3	6.7
2600 × 1820	0.5	4.17 - 3.43	4.3	6.4
2840 × 1920	0.5	4.17	4.3	6.4

TABLE 10.B.30 (METRIC) (CONTINUED)
ALLOWABLE FILL HEIGHTS FOR
CORRUGATED ALUMINUM ALLOY PIPE ARCHES
(75 mm × 25 mm CORRUGATIONS)

DESIGN LIFE - 100 YR				
SPAN × RISE (mm)	**MINIMUM COVER FOR 20 tonne/m^2 (m)**	**THICKNESS (mm)**	**MAXIMUM HEIGHTS OF COVER FOR CORNER BEARING PRESSURES IN tonne/m^2 (m)**	
			20 tonne	**30 tonne**
1520 × 1170	0.5	4.17 - 3.43	5.2	8.2
1670 × 1300	0.5	3.43	5.2	7.6
	0.5	4.17	5.2	8.2
1850 × 1400	0.5	3.43	5.2	7.0
	0.5	4.17	5.2	7.9
2050 × 1500	0.5	3.43	4.3	6.4
	0.5	4.17	4.3	6.7
2200 × 1620	0.5	3.43	4.3	5.8
	0.5	4.17	4.3	6.7
2400 × 1720	0.5	3.43	4.3	5.5
	0.5	4.17	4.3	6.7
2600 × 1820	0.5	3.43	4.3	4.9
	0.5	4.17	4.3	6.4
2840 × 1920	0.5	4.17	4.3	6.4

TABLE 10.B.30 (ENGLISH)
ALLOWABLE FILL HEIGHTS FOR
CORRUGATED ALUMINUM ALLOY PIPE ARCHES
(3 in × 1 in CORRUGATIONS)

DESIGN LIFE - 25 YR				
SPAN × RISE (in)	**MINIMUM COVER FOR 2 tons/ft^2 (ft)**	**GAGE**	**MAXIMUM HEIGHTS OF COVER FOR CORNER BEARING PRESSURES IN tons/ft^2 (ft)**	
			2 tons	**3 tons**
60 × 46	1.5	8 - 10 - 12 - 14	17	27
66 × 51	1.5	8 - 10 - 12 - 14	17	27
73 × 55	1.5	8 - 10 - 12 - 14	17	26
81 × 59	1.5	8 - 10 - 12	14	22
87 × 63	1.5	8 - 10 - 12	14	22
95 × 67	1.5	8 - 10 - 12	14	22
103 × 71	1.5	8 - 10	14	21
112 × 75	1.5	8	14	21

DESIGN LIFE - 50 YR				
SPAN × RISE (in)	**MINIMUM COVER FOR 2 tons/ft^2 (ft)**	**GAGE**	**MAXIMUM HEIGHTS OF COVER FOR CORNER BEARING PRESSURES IN tons/ft^2 (ft)**	
			2 tons	**3 tons**
60 × 46	1.5	14	17	19
	1.5	8 - 10 - 12	17	27
66 × 51	1.5	14	17	17
	1.5	8 - 10 - 12	17	27
73 × 55	1.5	14	15	15
	1.5	8 - 10 - 12	17	26
81 × 59	1.5	8 - 10 - 12	14	22
87 × 63	1.5	8 - 10 - 12	14	22
95 × 67	1.5	8 - 10 - 12	14	22
103 × 71	1.5	8 - 10	14	21
112 × 75	1.5	8	14	21

DESIGN LIFE - 100 YR				
SPAN × RISE (in)	**MINIMUM COVER FOR 2 tons/ft^2 (ft)**	**GAGE**	**MAXIMUM HEIGHTS OF COVER FOR CORNER BEARING PRESSURES IN tons/ft^2 (ft)**	
			2 tons	**3 tons**
60 × 46	1.5	8 - 10	17	27
66 × 51	1.5	10	17	25
	1.5	8	17	27
73 × 55	1.5	10	17	23
	1.5	8	17	26
81 × 59	1.5	10	14	21
	1.5	8	14	22
87 × 63	1.5	10	14	19
	1.5	8	14	22
95 × 67	1.5	10	14	18
	1.5	8	14	22
103 × 71	1.5	10	14	16
	1.5	8	14	21
112 × 75	1.5	8	14	21

TABLE 10.B.31 (METRIC)
ALLOWABLE FILL HEIGHTS FOR
SPIRAL RIB ALUMINIZED STEEL PIPES
(19 mm x 19 mm x 190 mm CORRUGATIONS)

DESIGN LIFE - 25 YR						
PIPE DIAMETER (mm)	HEIGHTS OF FILL (m)					
	1.63 mm thickness		2.01 mm thickness		2.77 mm thickness	
	MIN	MAX	MIN	MAX	MIN	MAX
450	0.5	20.1	0.5	31.7	—	—
525	0.5	17.4	0.5	27.1	0.5	49.1
600	0.5	14.9	0.5	23.8	0.5	43.0
750	0.5	11.9	0.5	18.9	0.5	34.1
900	0.5	10.1	0.5	15.8	0.5	28.7
1050	0.5	8.5	0.5	13.4	0.5	24.4
1200	0.5	7.3	0.5	11.9	0.5	21.3
1350	—	—	0.5	10.4	0.5	18.9
1500	—	—	0.5	9.4	0.5	17.1
1650	—	—	—	—	0.5	15.5
1800	—	—	—	—	0.5	14.3
1950	—	—	—	—	0.6	13.1

DESIGN LIFE - 50 YR						
PIPE DIAMETER (mm)	HEIGHTS OF FILL (m)					
	1.63 mm thickness		2.01 mm thickness		2.77 mm thickness	
	MIN	MAX	MIN	MAX	MIN	MAX
450	0.5	9.4	0.5	16.8	—	—
525	0.5	7.9	0.5	14.3	0.5	33.5
600	0.5	7.0	0.5	12.5	0.5	29.3
750	0.5	5.5	0.5	10.1	0.5	23.5
900	0.5	4.6	0.5	8.2	0.5	19.5
1050	0.6	4.0	0.5	7.0	0.5	16.8
1200	0.6	3.4	0.5	6.1	0.5	14.6
1350	—	—	0.5	5.5	0.5	12.8
1500	—	—	0.5	4.9	0.5	11.6
1650	—	—	—	—	0.5	10.7
1800	—	—	—	—	0.5	9.8
1950	—	—	—	—	0.6	8.8

DESIGN LIFE - 100 YR						
PIPE DIAMETER (mm)	HEIGHTS OF FILL (m)					
	1.63 mm thickness		2.01 mm thickness		2.77 mm thickness	
	MIN	MAX	MIN	MAX	MIN	MAX
525	—	—	—	—	0.5	11.3
600	—	—	—	—	0.5	10.1
750	—	—	—	—	0.5	7.9
900	—	—	—	—	0.5	6.4
1050	—	—	—	—	0.5	5.5
1200	—	—	—	—	0.5	4.9
1350	—	—	—	—	0.5	4.3
1500	—	—	—	—	0.6	3.7
1650	—	—	—	—	0.6	3.4
1800	—	—	—	—	0.8	3.0
1950	—	—	—	—	0.8	2.7

TABLE 10.B.31 (ENGLISH)
ALLOWABLE FILL HEIGHTS FOR
SPIRAL RIB ALUMINIZED STEEL PIPES
(3/4 in x 3/4 in x 7 1/2 in CORRUGATIONS)

DESIGN LIFE - 25 YR						
PIPE DIAMETER (in)	HEIGHTS OF FILL (ft)					
	16 Gage		14 Gage		12 Gage	
	MIN	MAX	MIN	MAX	MIN	MAX
18	1.5	66	1.5	104	—	—
21	1.5	57	1.5	89	1.5	161
24	1.5	49	1.5	78	1.5	141
30	1.5	39	1.5	62	1.5	112
36	1.5	33	1.5	52	1.5	94
42	1.5	28	1.5	44	1.5	80
48	1.5	24	1.5	39	1.5	70
54	—	—	1.5	34	1.5	62
60	—	—	1.5	31	1.5	56
66	—	—	—	—	1.5	51
72	—	—	—	—	1.5	47
78	—	—	—	—	2	43

DESIGN LIFE - 50 YR						
PIPE DIAMETER (in)	HEIGHTS OF FILL (ft)					
	16 Gage		14 Gage		12 Gage	
	MIN	MAX	MIN	MAX	MIN	MAX
18	1.5	31	1.5	55	—	—
21	1.5	26	1.5	47	1.5	110
24	1.5	23	1.5	41	1.5	96
30	1.5	18	1.5	33	1.5	77
36	1.5	15	1.5	27	1.5	64
42	2	13	1.5	23	1.5	55
48	2	11	1.5	20	1.5	48
54	—	—	1.5	18	1.5	42
60	—	—	1.5	16	1.5	38
66	—	—	—	—	1.5	35
72	—	—	—	—	1.5	32
78	—	—	—	—	2	29

DESIGN LIFE - 100 YR						
PIPE DIAMETER (in)	HEIGHTS OF FILL (ft)					
	16 Gage		14 Gage		12 Gage	
	MIN	MAX	MIN	MAX	MIN	MAX
21	—	—	—	—	1.5	37
24	—	—	—	—	1.5	33
30	—	—	—	—	1.5	26
36	—	—	—	—	1.5	21
42	—	—	—	—	1.5	18
48	—	—	—	—	1.5	16
54	—	—	—	—	1.5	14
60	—	—	—	—	2	12
66	—	—	—	—	2	11
72	—	—	—	—	2.5	10
78	—	—	—	—	2.5	9

TABLE 10.B.32 (METRIC)
ALLOWABLE FILL HEIGHTS FOR
SPIRAL RIB ALUMINUM ALLOY PIPES
(19 mm x 19 mm x 190 mm CORRUGATIONS)

DESIGN LIFE - 25 YR								
PIPE DIAMETER (mm)	HEIGHTS OF FILL (m)							
	1.52 mm thickness		1.91 mm thickness		2.67 mm thickness		3.43 mm thickness	
	MIN	MAX	MIN	MAX	MIIN	MAX	MIN	MAX
450	0.5	13.1	0.5	19.8	—	—	—	—
525	0.5	11.0	0.5	17.1	0.5	28.0	—	—
600	0.5	9.8	0.5	14.9	0.5	24.7	—	—
750	0.5	7.6	0.5	11.9	0.5	19.5	—	—
900	—	—	0.5	9.8	0.5	16.5	0.5	23.2
1050	—	—	—	—	0.6	14.0	0.6	19.8
1200	—	—	—	—	0.6	12.2	0.6	17.4
1350	—	—	—	—	0.6	10.7	0.6	15.2
1500	—	—	—	—	—	—	0.6	13.7
1650	—	—	—	—	—	—	0.6	12.5

DESIGN LIFE - 50 YR								
PIPE DIAMETER (mm)	HEIGHTS OF FILL (m)							
	1.52 mm thickness		1.91 mm thickness		2.67 mm thickness		3.43 mm thickness	
	MIN	MAX	MIN	MAX	MIIN	MAX	MIN	MAX
450	0.5	6.7	0.5	11.3	—	—	—	—
525	0.5	5.8	0.5	9.8	0.5	21.3	—	—
600	0.5	4.9	0.5	8.5	0.5	18.6	—	—
750	0.6	4.0	0.5	6.7	0.5	14.9	—	—
900	—	—	0.5	5.5	0.5	12.2	0.5	21.3
1050	—	—	—	—	0.6	10.7	0.6	18.3
1200	—	—	—	—	0.6	9.1	0.6	16.2
1350	—	—	—	—	0.6	8.2	0.6	14.3
1500	—	—	—	—	—	—	0.6	12.8
1650	—	—	—	—	—	—	0.6	11.6

DESIGN LIFE - 100 YR								
PIPE DIAMETER (mm)	HEIGHTS OF FILL (m)							
	1.52 mm thickness		1.91 mm thickness		2.67 mm thickness		3.43 mm thickness	
	MIN	MAX	MIN	MAX	MIIN	MAX	MIN	MAX
900	—	—	—	—	—	—	0.5	9.8
1050	—	—	—	—	—	—	0.6	8.2
1200	—	—	—	—	—	—	0.6	7.3
1350	—	—	—	—	—	—	0.6	6.4
1500	—	—	—	—	—	—	0.6	5.8
1650	—	—	—	—	—	—	0.6	5.2

TABLE 10.B.32 (ENGLISH)
ALLOWABLE FILL HEIGHTS FOR
SPRIAL RIB ALUMINUM ALLOY PIPES
(3/4 in x 3/4 in x 7 1/2 in CORRUGATIONS)

DESIGN LIFE - 25 YR								
PIPE DIAMETER (in)	HEIGHTS OF FILL (ft)							
	16 Gage		14 Gage		12 Gage		10 Gage	
	MIN	MAX	MIN	MAX	MIIN	MAX	MIN	MAX
18	1.5	43	1.5	65	—	—	—	—
21	1.5	36	1.5	56	1.5	92	—	—
24	1.5	32	1.5	49	1.5	81	—	—
30	1.5	25	1.5	39	1.5	64	—	—
36	—	—	1.5	32	1.5	54	1.5	76
42	—	—	—	—	2	46	2	65
48	—	—	—	—	2	40	2	57
54	—	—	—	—	2	35	2	50
60	—	—	—	—	—	—	2	45
66	—	—	—	—	—	—	2	41

DESIGN LIFE - 50 YR								
PIPE DIAMETER (in)	HEIGHTS OF FILL (ft)							
	16 Gage		14 Gage		12 Gage		10 Gage	
	MIN	MAX	MIN	MAX	MIIN	MAX	MIN	MAX
18	1.5	22	1.5	37	—	—	—	—
21	1.5	19	1.5	32	1.5	70	—	—
24	1.5	16	1.5	28	1.5	61	—	—
30	2	13	1.5	22	1.5	49	—	—
36	—	—	1.5	18	1.5	40	1.5	70
42	—	—	—	—	2	35	2	60
48	—	—	—	—	2	30	2	53
54	—	—	—	—	2	27	2	47
60	—	—	—	—	—	—	2	42
66	—	—	—	—	—	—	2	38

DESIGN LIFE - 100 YR								
PIPE DIAMETER (in)	HEIGHTS OF FILL (ft)							
	16 Gage		14 Gage		12 Gage		10 Gage	
	MIN	MAX	MIN	MAX	MIIN	MAX	MIN	MAX
900	—	—	—	—	—	—	1.5	32
1050	—	—	—	—	—	—	2	27
1200	—	—	—	—	—	—	2	24
1350	—	—	—	—	—	—	2	21
1500	—	—	—	—	—	—	2	19
1650	—	—	—	—	—	—	2	17

TABLE 10.B.33 (METRIC)
ALLOWABLE FILL HEIGHTS FOR
SPIRAL RIB ALUMINIZED STEEL PIPE ARCHES
(19 mm x 19 mm x 190 mm CORRUGATIONS)

DESIGN LIFE - 25 YR				
SPAN × RISE (mm)	**MINIMUM COVER FOR 20 tonne/m^2 (m)**	**THICKNESS (mm)**	**MAXIMUM HEIGHTS OF COVER FOR CORNER BEARING PRESSURES IN tonne/m^2 (m)**	
			20 tonne	**30 tonne**
500 × 400	0.5	1.63 - 2.01	4.3	6.1
575 × 475	0.5	1.63 - 2.01 - 2.77	4.0	5.8
675 × 525	0.5	1.63 - 2.01 - 2.77	3.7	5.2
825 × 650	0.5	1.63 - 2.01 - 2.77	3.7	5.2
1000 × 775	0.5	1.63 - 2.01 - 2.77	3.4	5.2
1150 × 900	0.5	2.77	3.4	5.2
1325 × 1025	0.5	2.77	3.4	5.2
1500 × 1150	0.5	2.77	5.2	8.2
1650 × 1275	0.5	2.77	5.2	8.2

DESIGN LIFE - 50 YR				
SPAN × RISE (mm)	**MINIMUM COVER FOR 20 tonne/m^2 (m)**	**THICKNESS (mm)**	**MAXIMUM HEIGHTS OF COVER FOR CORNER BEARING PRESSURES IN tonne/m^2 (m)**	
			20 tonne	**30 tonne**
500 × 400	0.5	1.63 - 2.01	4.3	6.1
575 × 475	0.5	1.63 - 2.01 - 2.77	4.0	5.8
675 × 525	0.5	1.63 - 2.01 - 2.77	3.7	5.2
825 × 650	0.5	1.63 - 2.01 - 2.77	3.7	5.2
1000 × 775	0.6	1.63	3.4	4.3
	0.5	2.01 - 2.77	3.4	5.2
1150 × 900	0.5	2.77	3.4	5.2
1325 × 1025	0.5	2.77	3.4	5.2
1500 × 1150	0.5	2.77	5.2	8.2
1650 × 1275	0.5	2.77	5.2	8.2

DESIGN LIFE - 100 YR				
SPAN × RISE (mm)	**MINIMUM COVER FOR 20 tonne/m^2 (m)**	**THICKNESS (mm)**	**MAXIMUM HEIGHTS OF COVER FOR CORNER BEARING PRESSURES IN tonne/m^2 (m)**	
			20 tonne	**30 tonne**
575 × 475	0.5	2.77	4.0	5.8
675 × 525	0.5	2.77	3.7	5.2
825 × 650	0.5	2.77	3.7	5.2
1000 × 775	0.5	2.77	3.4	5.2
1150 × 900	0.5	2.77	3.4	5.2
1325 × 1025	0.5	2.77	3.4	4.6
1500 × 1150	0.6	2.77	3.4	3.7
1650 × 1275	0.6	2.77	3.4	3.4

TABLE 10.B.33 (ENGLISH)
ALLOWABLE FILL HEIGHTS FOR
SPIRAL RIB ALUMINIZED STEEL PIPE ARCHES
(3/4 in x 3/4 in x 7 1/2 in CORRUGATIONS)

DESIGN LIFE - 25 YR				
SPAN × RISE (in)	**MINIMUM COVER FOR 2 tons/ft^2 (ft)**	**GAGE**	**MAXIMUM HEIGHTS OF COVER FOR CORNER BEARING PRESSURES IN tons/ft^2 (ft)**	
			2 tons	**3 tons**
20 × 16	1.5	16 - 14	14	20
23 × 19	1.5	16 - 14 - 12	13	19
27 × 21	1.5	16 - 14 - 12	12	17
33 × 26	1.5	16 - 14 - 12	12	17
40 × 31	1.5	16 - 14 - 12	11	17
46 × 36	1.5	12	11	17
53 × 41	1.5	12	11	17
60 × 46	1.5	12	17	27
66 × 51	1.5	12	17	27

DESIGN LIFE - 50 YR				
SPAN × RISE (in)	**MINIMUM COVER FOR 2 tons/ft^2 (ft)**	**GAGE**	**MAXIMUM HEIGHTS OF COVER FOR CORNER BEARING PRESSURES IN tons/ft^2 (ft)**	
			2 tons	**3 tons**
20 × 16	1.5	16 - 14	14	20
23 × 19	1.5	16 - 14 - 12	13	19
27 × 21	1.5	16 - 14 - 12	12	17
33 × 26	1.5	16 - 14 - 12	12	17
40 × 31	2	16	11	14
	1.5	14 - 12	11	17
46 × 36	1.5	12	11	17
53 × 41	1.5	12	11	17
60 × 46	1.5	12	17	27
66 × 51	1.5	12	17	27

DESIGN LIFE - 100 YR				
SPAN × RISE (in)	**MINIMUM COVER FOR 2 tons/ft^2 (ft)**	**GAGE**	**MAXIMUM HEIGHTS OF COVER FOR CORNER BEARING PRESSURES IN tons/ft^2 (ft)**	
			2 tons	**3 tons**
23 × 19	1.5	12	13	19
27 × 21	1.5	12	12	17
33 × 26	1.5	12	12	17
40 × 31	1.5	12	11	17
46 × 36	1.5	12	11	17
53 × 41	1.5	12	11	15
60 × 46	2	12	11	12
66 × 51	2	12	11	11

TABLE 10.B.34 (METRIC)
ALLOWABLE FILL HEIGHTS FOR
SPIRAL RIB ALUMINUM ALLOY PIPE ARCHES
(19 mm x 19 mm x 190 mm CORRUGATIONS)

DESIGN LIFE - 25 YR				
SPAN × RISE (mm)	**MINIMUM COVER FOR 20 tonne/m² (m)**	**THICKNESS (mm)**	**MAXIMUM HEIGHTS OF COVER FOR CORNER BEARING PRESSURES IN tonne/m² (m)**	
			20 tonne	**30 tonne**
500 × 400	0.6	1.52 - 1.91	4.3	6.1
575 × 475	0.6	1.52 - 1.91 - 2.67	4.0	5.8
675 × 525	0.6	1.52 - 1.91 - 2.67	3.7	5.2
825 × 650	0.6	1.52 - 1.91 - 2.67	3.7	5.2
1000 × 775	0.6	1.91 - 2.67 - 3.43	3.4	5.2
1150 × 900	0.6	2.67 - 3.43	3.4	5.2
1325 × 1025	0.6	2.67 - 3.43	3.4	5.2
1500 × 1150	0.6	3.43	5.2	8.2
1650 × 1275	0.6	3.43	5.2	8.2

DESIGN LIFE - 50 YR				
SPAN × RISE (mm)	**MINIMUM COVER FOR 20 tonne/m² (m)**	**THICKNESS (mm)**	**MAXIMUM HEIGHTS OF COVER FOR CORNER BEARING PRESSURES IN tonne/m² (m)**	
			20 tonne	**30 tonne**
500 × 400	0.6	1.52 - 1.91	4.3	6.1
575 × 475	0.6	1.52	4.0	5.5
	0.6	1.91 - 2.67	4.0	5.8
675 × 525	0.6	1.52	3.7	4.6
	0.6	1.91 - 2.67	3.7	5.2
825 × 650	0.6	1.52	3.7	3.7
	0.6	1.91 - 2.67	3.7	5.2
1000 × 775	0.6	1.91	3.4	4.6
	0.6	2.67 - 3.43	3.4	5.2
1150 × 900	0.6	2.67 - 3.43	3.4	5.2
1325 × 1025	0.6	2.67 - 3.43	3.4	5.2
1500 × 1150	0.6	3.43	5.2	8.2
1650 × 1275	0.6	3.43	5.2	8.2

DESIGN LIFE - 100 YR				
SPAN × RISE (mm)	**MINIMUM COVER FOR 20 tonne/m² (m)**	**THICKNESS (mm)**	**MAXIMUM HEIGHTS OF COVER FOR CORNER BEARING PRESSURES IN tonne/m² (m)**	
			20 tonne	**30 tonne**
1000 × 775	0.6	3.43	3.4	5.2
1150 × 900	0.6	3.43	3.4	5.2
1325 × 1025	0.6	3.43	3.4	5.2
1500 × 1150	0.6	3.43	5.2	5.8
1650 × 1275	0.6	3.43	5.2	5.5

TABLE 10.B.34 (ENGLISH)
ALLOWABLE FILL HEIGHTS FOR
SPIRAL RIB ALUMINUM ALLOY PIPE ARCHES
(3/4 in x 3/4 in x 7 1/2 in CORRUGATIONS)

DESIGN LIFE - 25 YR				
SPAN × RISE (in)	**MINIMUM COVER FOR 2 tons/ft^2 (ft)**	**GAGE**	**MAXIMUM HEIGHTS OF COVER FOR CORNER BEARING PRESSURES IN tons/ft^2 (ft)**	
			2 tons	**3 tons**
20 × 16	2	16 - 14	14	20
23 × 19	2	16 - 14 - 12	13	19
27 × 21	2	16 - 14 - 12	12	17
33 × 26	2	16 - 14 - 12	12	17
40 × 31	2	14 - 12 - 10	11	17
46 × 36	2	12 - 10	11	17
53 × 41	2	12 - 10	11	17
60 × 46	2	10	17	27
66 × 51	2	10	17	27

DESIGN LIFE - 50 YR				
SPAN × RISE (in)	**MINIMUM COVER FOR 2 tons/ft^2 (ft)**	**GAGE**	**MAXIMUM HEIGHTS OF COVER FOR CORNER BEARING PRESSURES IN tons/ft^2 (ft)**	
			2 tons	**3 tons**
20 × 16	2	16 - 14	14	20
23 × 19	2	16	13	18
	2	14 - 12	13	19
27 × 21	2	16	12	15
	2	14 - 12	12	17
33 × 26	2	16	12	12
	2	14 - 12	12	17
40 × 31	2	16	11	15
	2	12 - 10	11	17
46 × 36	2	12 - 10	11	17
53 × 41	2	12 - 10	11	17
60 × 46	2	10	17	27
66 × 51	2	10	17	27

DESIGN LIFE - 100 YR				
SPAN × RISE (in)	**MINIMUM COVER FOR 2 tons/ft^2 (ft)**	**GAGE**	**MAXIMUM HEIGHTS OF COVER FOR CORNER BEARING PRESSURES IN tons/ft^2 (ft)**	
			2 tons	**3 tons**
40 × 31	2	10	11	17
46 × 36	2	10	11	17
53 × 41	2	10	11	17
60 × 46	2	10	17	19
66 × 51	2	10	17	18

TABLE 10.B.35
FILL HEIGHT TABLE
THERMOPLASTIC PIPES
(FOR PIPES 450 mm (18 in) DIAMETER OR LARGER)

GROUP OF PIPE*	MINIMUM FILL HEIGHT**	MAXIMUM FILL HEIGHT**
Thermoplastic Pipe Groups I & IP	0.5 m (1.5 ft)	4.5 m (15.0 ft)
Thermoplastic Pipe Groups II & IIP	0.5 m (1.5 ft)	3.5 m (12.0 ft)
Thermoplastic Pipe Groups III & IIIP	0.6 m (2.0 ft)	2.5 m (8.0 ft)
Thermoplastic Pipe Groups IV & IVP	0.8 m (2.5 ft)	2.0 m (7.0 ft)
Thermoplastic Pipe - Corrugated PE, Groups V & VP	0.8 m (2.5 ft)	2.0 m (7.0 ft)
Thermoplastic Pipe Groups VI & VIP	0.6 m (2.0 ft)	4.5 m (15.0 ft)
Thermoplastic Pipe Group VII	0.6 m (2.0 ft)	3.5 m (12.0 ft)

LEGEND: P = Perforated

* For Group Description see Publication 408, Section 601.

** Fill height is defined as the material from top of the pipe to the riding surface, including the pavement structure. Refer to Publication 72M, *Roadway Construction Standards*, RC-30M for minimum cover over pipe under pavements.

CHAPTER 10, APPENDIX C

HYDRAULIC MODELING REQUIREMENTS FOR PENNDOT H&H REPORTS

This document was prepared to outline the hydraulic modeling requirements for PennDOT H&H Reports when a project is in a FEMA regulated area. FEMA's mission is to reduce flood damage by controlling development in FEMA Study Areas, especially FEMA regulatory floodways. Development includes any fill, such as bridge piers and abutments, which acts as an obstruction to flow. FEMA regulated areas may be based on detailed or approximate studies; hydraulic models were used in detailed areas, whereas limited calculations or estimations were used to map approximate areas. FEMA regulations require a higher level of analysis and documentation when a project encroaches on a FEMA floodplain or regulatory floodway; therefore, PennDOT and PA DEP also require a more thorough hydraulic analysis in detailed FEMA study areas. The guidance that follows lists the PennDOT, PA DEP, and FEMA hydraulic modeling requirements and is broken into two different sections:

- **Section 1**: Projects with flooding increases within the allowable limits
- **Section 2**: Projects with flooding increases that require a FEMA map revision

Publication 13M, Design Manual, Part 2, *Highway Design*, and the Code of Federal Regulations (CFR) are cited where appropriate. In addition, the guidance in Section 1.a is recommended for projects not located in FEMA regulated areas. The following table outlines the modeling requirements based on the location of the project and the anticipated increases in the 100-year water surface elevation.

Location of Project		Increase in 100-year WSE	Modeling Requirements in Section	CLOMR/LOMR
Not in a FEMA study area		N/A	1.a	
Approximate FEMA study area		≤1.00 ft	1.a	
		>1.00 ft	2.a	CLOMR/LOMR required
Detailed FEMA study area without a FEMA regulatory floodway		≤1.00 ft	1.b	
		>1.00 ft	2.b	CLOMR/LOMR required
Detailed FEMA study area with a FEMA regulatory floodway	No fill in floodway	≤1.00 ft	1.b	
		>1.00 ft	2.b	CLOMR/LOMR required
	Fill in floodway	≤0.00 ft	1.b	
		>1.00 ft	2.b	CLOMR/LOMR required

The hydrologic and hydraulic models used in FEMA studies must be evaluated according to current design guidance and current modeling practices for sizing highway waterway structures. Many FEMA studies were performed in the 1970's for the purpose of defining floodplain and floodway boundaries for the National Flood Insurance Program, whereas PennDOT usually conducts hydraulic studies to design waterway structures. Therefore, it is to be expected that different levels of detail and different methodologies are appropriate for these two types of studies.

It is common for existing water surface elevations to differ from the published elevations in the FEMA studies. The purpose of the existing model is to adequately reflect existing site conditions. If a FEMA model is used as the basis for the existing model, this will involve documenting differences and/or correcting errors in the FEMA model, adding cross sections, incorporating more detailed topographic data, and accounting for any channel/floodplain modifications since the FEMA model was published. **The existing model is required to provide an updated model to support conclusions about the actual impact of the proposed project.** When a map revision is required, the hydraulic model may need to be extended beyond the PennDOT study limits. FEMA and municipal coordination is necessary to determine the limits of the hydraulic models to ensure that the Duplicate Effective, Corrected Effective, Existing, and Proposed Models tie into the published FEMA profiles. Additional survey may be required beyond the PennDOT study limits. Changes that have occurred since the FEMA model was created (e.g., channel

geometry, buildings in floodplain, other bridges/culverts, etc.) must be surveyed and incorporated within the FEMA-required limits of the hydraulic model. If a map revision is not required, it is not necessary to incorporate/update data from the entire reach of a FEMA study. Any relevant FEMA data within the limits of the PennDOT study should be evaluated and incorporated, if appropriate. It may also be prudent to incorporate the nearest upstream/downstream FEMA section beyond the study limits, to enable a comparison with the published FEMA profile.

Another reason for differences between existing and published flood elevations is usually due to the differences in modeling software. There are significant differences between the current HEC-RAS program, which FEMA strongly supports, and the other programs (e.g., HEC-2, WSPRO, E431, J635, etc.) that were accepted at the time of the original FEMA study. For instance, HEC-RAS uses none of the same computational routines as its predecessor, HEC-2. Appendix C of the HEC-RAS Reference Manual describes all of the major computational differences between HEC-RAS and HEC-2.

There are a number of frequently encountered situations that do not require a FEMA map revision or Conditional Letter of Map Revision (CLOMR), but do require additional documentation in the H&H Report.

- There are differences between current survey data and FEMA geometric data (e.g., channel data, stream alignment, structure geometry, etc.).
- The existing and/or proposed water surface elevations differ from the published elevations in the FEMA Flood Insurance Study.
- The hydrologic analysis using current methods produces different peak flow values than the published FEMA flows.
- An existing bridge crossing that was originally mapped is proposed for removal, or a new structure crossing is proposed for construction.

FEMA will require a CLOMR and a LOMR when there is an increase in the 100-year flood elevation between the existing and proposed models in excess of the allowable limits. A CLOMR and LOMR will be required when the proposed project is in:

- an Approximate FEMA area with 100-year increases > 1.00 ft, per Chapter 10, Appendix A, *Procedures for Coordinating Highway Encroachments on Floodplains with FEMA*;
- a Detailed FEMA area without a FEMA regulatory floodway and 100-year increases > 1.00 ft, per 44 CFR 60.3(c)(10);
- the floodway fringe of a Detailed FEMA area with a FEMA regulatory floodway and 100-year increases > 1.00 ft, per 44 CFR 60.3(c)(10); or
- the floodway of a Detailed FEMA area with a FEMA regulatory floodway and 100-year increases > 0.00 ft, per 44 CFR 60.3(d)(3).

SECTION 1: Projects with 100-year water surface increases within the allowable limits

1. Increases in 100-year water surface elevation between existing and proposed within the allowable limits

a. Approximate FEMA Study (100-year increases ≤ 1.00 ft) or No FEMA Study

- Calculate hydrology with PennDOT accepted method(s), per Chapter 10, Section 10.6.C
- Model the PennDOT design, Chapter 105-classified flood, 100-, and 500-year (if applicable) events, per Chapter 10, Section 10.6.E
- Hydraulic model output and electronic files for:
  - Existing model
  - Proposed model
  - Temporary model (if applicable)

Coordination with FEMA and local Municipality:
If not in a FEMA Study area, refer to Chapter 10, Section 10.7.D.2 Scenario 1.
If in a FEMA Approximate area, refer to Chapter 10, Section 10.7.D.2 Scenario 2.

b. Detailed FEMA Study with no floodway (100-year increases ≤ 1.00 ft), or
Detailed FEMA Study with floodway and fill will be placed in the floodway (100-year increases ≤ 0.00 ft), or
Detailed FEMA Study with floodway and no fill will be placed in the floodway (100-year increases ≤ 1.00 ft)

- Calculate hydrology with PennDOT accepted method(s), per Chapter 10, Section 10.6.C
- Compare FEMA published flows with calculated flows and justify use of flows, per Chapter 10, Section 10.6.C.2
- Model the PennDOT design, Chapter 105-classified flood, 100-, and 500-year (if applicable) events, per Chapter 10, Section 10.6.E
- If the use of the calculated flows is justified over the FEMA flows, modeler must run the FEMA published 100-year flow in addition to the calculated 100-year flow, per Chapter 10, Section 10.7.D.2
- Hydraulic model output and electronic files for:
  - Existing model
  - Proposed model
  - Temporary model (if applicable)
- Compare the existing model water surface elevations to the published regulatory base flood elevations (**Note:** Adjustment may be necessary between FEMA datum and survey datum.)
  - Include copies of floodway tables, flood profiles, and other pertinent data from the Flood Insurance Study, per Chapter 10, Section 10.7.C.6
  - Document and justify any differences, per Chapter 10, Section 10.7.D.2.
- The original FEMA hydraulic data should be utilized to the maximum extent as deemed appropriate, per Chapter 10, Section 10.7.C.3. (**Note:** Adjustment may be necessary between FEMA datum and survey datum.)
  - Request the model data from FEMA (Note: If the original data is not available, include the letter from FEMA in the H&H Report as proof.)
  - Review the information
  - Evaluate differences in FEMA data and current survey data
  - Incorporate FEMA data within the PennDOT study limits where appropriate

For Coordination with FEMA and local Municipality, refer to Chapter 10, Section 10.7.D.2 Scenario 2.

SECTION 2: Projects with 100-year water surface increases that require a FEMA map revision

2. Increases in 100-year water surface elevation between existing and proposed and a CLOMR and LOMR are required

a. Approximate FEMA Study (100-year increases > 1.00 ft)

- Same modeling requirements as Section 1.a of this document
- Map of existing and proposed 100-year floodplain boundaries, per CFR Title 44, Part 65.6.a.11
- Model the PennDOT design, Chapter 105-classified flood, 100-, and 500-year (if applicable) events, per Chapter 10, Section 10.6.E
- Submit with appropriate FEMA CLOMR or LOMR MT-2 Forms https://www.fema.gov/mt-2-application-forms-and-instructions

For Coordination with FEMA and local Municipality, refer to Chapter 10, Section 10.7.D.2 Scenario 3.

b. Detailed FEMA Study without a floodway (100-year increases > 1.00 ft) or
Detailed FEMA Study with a floodway and fill will be placed in the floodway (100-year increases > 0.00 ft) or
Detailed FEMA Study with floodway and no fill will be placed in the floodway (100-year increases > 1.00 ft)

- Calculate hydrology with PennDOT accepted method(s), per Chapter 10, Section 10.6.C
- Compare FEMA published flows with calculated flows, per Chapter 10, Section 10.6.C
- Model the PennDOT design, Chapter 105-classified flood, 100-, and 500-year (if applicable) events, per Chapter 10, Section 10.6.E
- If the use of the calculated flows is justified over the FEMA flows, modeler must run the FEMA published 100-year flow in addition to the calculated 100-year flow, per Chapter 10, Section 10.7.D.2
- In order to use the calculated flows, the change between published and calculated flows must be statistically significant, per CFR Title 44, Part 65.6.a.5. FEMA defines "statistically significant" as determined by a confidence limits analysis of the new discharge estimates.
- Hydraulic model input, output, and electronic files, per CFR Title 44, Part 65.6.a.8 and FEMA MT-2 Form Instructions:
    - **Effective FEMA Model** - Original FEMA hydraulic model used to develop the published base flood elevations.
    - **Duplicate Effective Model** - Obtain and reproduce the original Effective FEMA Model in HEC-RAS to produce the Duplicate Effective Model. Compare HEC-RAS Duplicate Effective Model water surface elevations to published FEMA profile (should be within 6 inches). FEMA coordination will be necessary to determine the limits of the hydraulic model to ensure that they tie into the published FEMA profiles.
    - **Corrected Effective Model** - Correct any errors in the Duplicate Effective Model (e.g., bridge data, modeling methods, errors in data) and add any additional cross sections or detailed topographic data. The Corrected Effective Model must not add any man-made changes since the Effective FEMA Model.
    - **Existing (Pre-project) Model** - Update the Corrected Effective Model with any man-made changes that have occurred since the development of the Effective FEMA Model. (**Note**: If there are no man-made changes to the model then the Corrected Effective Model will become the Existing Model.)
    - **Proposed (Revised or Post-Project) Model** - Add the proposed bridge/roadway geometry to the Existing Model.
    - **Existing Floodway Model** (if FEMA-delineated floodway is present) - Perform a floodway run using the Existing Model. This model must force the floodway widths to match the effective published floodway.
    - **Proposed Floodway Model** (if FEMA delineated floodway is present) - Using the Proposed Model, perform a floodway run and force increases to be 1.00 foot or less. This model will show the proposed 100-year floodway widths and elevations.

- Map of effective, existing, and proposed 100-year floodplain boundaries, per CFR Title 44, Part 65.6.a.11, and effective and proposed floodway boundaries (if applicable), per CFR 65.7.b.5
- Submit with appropriate FEMA CLOMR or LOMR MT-2 Forms https://www.fema.gov/mt-2-application-forms-and-instructions

For Coordination with FEMA and local Municipality, refer to Chapter 10, Section 10.7.D.2 Scenario 3.

BLANK PAGE

CHAPTER 10, APPENDIX D

HYDROLOGIC AND HYDRAULIC CHECKLISTS

BLANK PAGE

D-3 (03-15)

pennsylvania
DEPARTMENT OF TRANSPORTATION
www.dot.state.pa.us

Hydrologic and Hydraulic Report Checklist

PROJECT DETAILS

Road: _____

Waterbody: _____

District: _____

Municipality: _____

County: _____

H&H Report Sealed by
Licensed Engineer: _____

District or Company: _____

CHECKLISTS

Checklists Completed	Designer(s)	Reviewer(s)	Date(s)
☐ H&H Report			
☐ Abbreviated			
☐ Full			
☐ Hydrology			
☐ HEC-RAS			
☐ HY-8			
☐ Scour*			

*Not required with a Preliminary H&H Report submission

Instructions:

1. These checklists are intended to provide documentation that a quality assurance review was performed. All applicable checklists must be completed by an internal reviewer and included with H&H Report submission. If the report is submitted as a paper copy for review, the completed QA checklists must be attached to the transmittal letter. If the report is uploaded to the JPA_2 Expert System for review, these completed QA forms must be placed in the "PennDOT Files" section of JPA_2 Expert. These forms are not intended to be transmitted to PADEP with the permit submission. Information stored in the "PennDOT Files" section of JPA_2 Expert will not be transferred to PADEP with the permit application.

2. The check boxes on the right side of the H&H Report checklists are used to indicate whether an item has been included. If the item is not required or does not apply to the particular project, check N/A.

3. When filling out the forms electronically, the individual sheet headings are automatically updated based on information from the summary sheet input.

4. Additional space for comments is provided in the last tab; please indicate the applicable QA sheet and section.

5. **Printing Instructions**: When the applicable checklists have been completed, select those worksheets and select file - print. (To select multiple worksheets, Hold the shift key and select the worksheet tabs at the bottom of the page). The page numbers will automatically be updated to correspond to the total number of pages printed.

Notes:

The summary sheet should be printed and submitted with the applicable checklists. Depending on the project type, not all checklists will be required for an H&H Report submission. For example, a small culvert replacement project may include the H&H Report, Hydrology and HY-8 checklists (unless HEC-RAS was used). Whereas a bridge replacement project may require the H&H Report, Hydrology, HEC-RAS and Scour checklists.

D-3 (3-15)

pennsylvania DEPARTMENT OF TRANSPORTATION

www.dot.state.pa.us

Abbreviated Hydrologic and Hydraulic Report Checklist

Project:	District:
Municipality:	County:
Reviewer(s):	Date:

DESCRIPTION	EM PRESEN YES	NO	N/A
B.1.a. LOCATION MAP			
Acceptable forms (one required):			
☐ USGS quadrangle map (or map of equal detail) page _____			
☑ Aerial photographs page _____			
B.1.b. ENVIRONMENTAL CONCERNS			
1. PA Code Chapter 93 stream classification (check all that apply) page _____			
☐ WWF ☐ CWF ☐ MF			
☐ TSF ☐ HQ* ☐ EV*			
*Note if HQ or EV Stream, Antidegredation analysis may be required - see DM2, Chapter 13.7			
2. PA Fish and Boat Classification (check all that apply)			
☐ Approved Trout Stream (stocked) ☐ Class A Wild Trout page _____			
☐ Verified Natural Reproduction ☐ None			
B.1.c. STREAM BED MATERIAL page _____			
Type of material in stream bed from site inspection (i.e., sand, gravel, cobbles, etc.)			
B.1.d. PHOTOGRAPHS page _____			
a. Existing structure (upstream and downstream face)			
b. Upstream / downstream channel and floodplain			
c. Past floods (if available)			
d. Roadway station ahead and station back (recommended)			
e. Photo location map (recommended)			
B.1.e. SITE INSPECTION RECORDS page _____			
Dates and other information relative to site inspection(s) made by designer date _____			
B.2. HYDROLOGIC ANALYSIS			
a. Show drainage area above proposed crossing (note method of determining area) page _____			
b. Include design discharge(s) per Section 10.6.E page _____			
B.3. HYDRAULIC ANALYSIS			
a. The project is located in a FEMA mapped area? ☐ yes ☐ no			
If Yes is it a Detailed or Approximate area? _____			
(1) Original FIS study and flood map(s) provided page _____			
(2) Study is referenced in the text page _____			
(3) Was FEMA model obtained or documentation provided if unavailable?			
(4) Proposed structure encroaches on (check one): page _____			
☐ 100-year floodplain (floodway fringe)			
☐ 100-year floodway ☐ neither			
(5) Were existing flood elevations compared to FEMA's published? page _____			
(6) Were any differences in flood elevations > 0.5 ft explained? page _____			
b/c. Existing versus proposed conditions:			
(1) velocities* page _____			
(2) backwater elevations* page _____			
(3) bridge opening sizes (i.e., area of hydraulic openings) page _____			
(4) Is there an increase in the proposed 100-year flood elevation? ☐ yes ☐ no			
* Recommend including a table to compare all cross sections for the PennDOT design event and the 100-year event			

D-3 (3-15)

pennsylvania DEPARTMENT OF TRANSPORTATION

www.dot.state.pa.us

Abbreviated Hydrologic and Hydraulic Report Checklist

Project:	District:
Municipality:	County:
Reviewer(s):	Date:

DESCRIPTION			EM PRESEN		
			YES	NO	N/A
c. Acceptable hydraulic methods for the site (check the method used)					
☐ HEC-RAS (bridge and culvert design, water surface profiles)					
☐ HY-8 (culvert design)					
☐ Other l					
d. Estimated scour depths (refer to DM-4, Chapter 7)	page				
e. Riprap sizing for bank, pier, abutment, and/or culvert protection	page				
f. Construction measures (temp. stream crossings, causeways, roads, etc.)	page				
Comments or computations included	page				
B.4. RISK ASSESSMENT OR ANALYSIS*					
Narrative description of factors related to the 100-year flood	page				
Narrative description of factors related to the 2-year flood (temporary conditions)	page				
* Refer to Section 10.7.C.4 for the definition and additional requirements of a risk analysis					
B.5. SUMMARY DATA SHEET					
Complete all information listed in the Summary Data Sheet (Figure 10.7.1)	page				
(available for download from http://www.dot.state.pa.us/hh/Summary-Data-Sheet.Zip)					
Summary data matches the report tables, output/calculations, and TS&L					
B.6. DRAWINGS AND FIGURES					
a. Roadway plans and profiles indicating the following information:					
1. Locations of existing and/or proposed structures, stream channels and wetlands	page				
- Structure or culvert plan showing plan and elevation view (Box culvert plans should show baffle layout)					
2. 100-year floodplain boundary	page				
3. Temporary stream crossing, access road, cofferdam, diversion facility, etc.	page				
4. The magnitude, frequency and pertinent water surface elevation for PennDOT design and 100-year flood	page				
b. Plan drawing showing the location and orientation of all cross sections used in the hydraulic model (with scale, contours, and all important hydraulic features)	page				
Cross-sections perpendicular to flood flow (minimum):	page				
☐ Upstream (500 ft)					
☐ Immediately upstream of proposed and/or existing crossings					
☐ Immediately downstream of proposed and/or existing crossings					
☐ Downstream (500 ft)					
Items 6.c and 6.d below do not require separate drawings provided that the information is available in the HEC-RAS model submitted with the report					
c. Profile of stream showing bed slope, normal water surface, and flood water surface elevations	page				
d. Cross section output of all cross sections used for backwater analysis	page				
e. Floodway maps and flood profiles from FEMA Flood Insurance Studies (when in a detailed FEMA study area)	page				
ELECTRONIC FILES					
Electronic files for the hydrologic and hydraulic models (as applicable)					

D-3 (3-15)

pennsylvania DEPARTMENT OF TRANSPORTATION

www.dot.state.pa.us

Hydrologic and Hydraulic Report Checklist

Project: District:

Municipality: County:

Reviewer(s): Date:

DESCRIPTION	ITEM PRESENT? YES	NO	N/A
C.1.a. LOCATION MAP			
Acceptable forms (one required):			
☐ USGS quadrangle map (or map of equal detail) page _____			
☐ Aerial photographs page _____			
Required information:			
(1) Project location including proposed highway alignment			
(2) Drainage area			
(3) Label stream and direction, river reach studied			
C.1.b. EXISTING STRUCTURES (IF APPLICABLE) page _____			
1. Identify existing hydraulic structures (by map), including upstream and downstream of site			
2. Must describe:			
(1) Type of structure, span lengths, pier orientation			
(2) Cross section beneath structure - stream clearance and skew			
3. Compare stream and existing structure locations with the proposed crossing			
4. Indicate whether existing structures are to remain in place			
C.1.c. FLOOD INFORMATION page _____			
1. Elevations of available highwater marks along the stream w/ dates of occurrence			
2. Critical flood elevations of interest (possible damage)			
3. Local testimony of flooding (if available) or structure performance (non-flooding) per Section 10.7.C.1.i			
C.1.d. ENVIRONMENTAL CONCERNS			
- PA Code Chapter 93 stream classification (check all that apply) page _____			
☐ WWF ☐ CWF ☐ MF			
☐ TSF ☐ HQ* ☐ EV*			
*Note if HQ or EV Stream, Antidegredation analysis may be required - see DM2, Chapter 13.7			
PA Fish and Boat Classification (check all that apply)			
☐ Approved Trout Stream (stocked) ☐ Class A Wild Trout page _____			
☐ Verified Natural Reproduction ☐ None			
- Comments on other environmental concerns			
- Perennial, ephemeral, or intermittent stream? _____			
C.1.e. HISTORY OF DRIFT, ICE AND STREAM BANK STABILITY page _____			
- Stability of stream banks (i.e., exposed soil, slumping, tilting trees, etc.)			
- Type of material in stream bed from site inspection (i.e., sand, gravel, cobbles, etc.)			
- History of ice accumulation or damage			
C.1.f. PHOTOGRAPHS page _____			
- Existing structure (upstream and downstream face)			
- Upstream / downstream channel and floodplain			
- Past floods (if available)			
- Roadway station ahead and station back (recommended)			
- Photo location map (recommended)			
- Upstream and downstream structures			
C.1.g. FACTORS AFFECTING WATER STAGES page _____			
1. High water from other streams			
2. Reservoirs (existing or proposed) and approximate date of construction			
3. Flood control projects and status (e.g., control structures, operator, operating policy)			
4. Other controls			

D-3 (3-15)

pennsylvania DEPARTMENT OF TRANSPORTATION

www.dot.state.pa.us

Hydrologic and Hydraulic Report Checklist

Project: District:

Municipality: County:

Reviewer(s): Date:

DESCRIPTION		ITEM PRESENT? YES	NO	N/A
C.1.h. DEBRIS				
Indicate if debris can be a problem at the structure site	page _____			
C.1.i. SITE INSPECTION RECORDS	page _____			
- Dates and other information relative to site inspection(s) made by designer	date _____			
- If applicable, documentaion of local testimony is included				
C.1.j. LINE AND GRADE APPROVAL	page _____			
Indicate date of Line and Grade Approval or if pending	date _____			
C.2. HYDROLOGIC ANALYSIS				
a. Show drainage area above proposed crossing (note method of determining area)	page _____			
b. List flood records available	page _____			
c. Include design discharge(s) per Section 10.6.E	page _____			
d. Show flood-frequency curve for the site	page _____			
e. Show stage-discharge-frequency curves for the site (existing and proposed conditions)	page _____			
C.3. HYDRAULIC ANALYSIS				
a. The project is located in a FEMA mapped area? ☐ yes ☐ no				
If Yes is it a Detailed or Approximate area? _____				
(1) Original FIS study and flood map(s) provided	page _____			
(2) Study is referenced in the text	page _____			
(3) Was FEMA model obtained or documentation provided if unavailable?				
(4) Proposed structure encroaches on (check one):	page _____			
☐ 100-year floodplain (floodway fringe)				
☐ 100-year floodway ☐ neither				
(5) Were existing flood elevations compared to FEMA's published?	page _____			
(6) Were any differences in flood elevations > 0.5 ft explained?	page _____			
b. Existing versus proposed conditions:				
(1) velocities*	page _____			
(2) backwater elevations*	page _____			
(3) bridge opening sizes (i.e., area of hydraulic openings)	page _____			
(4) Is there an increase in the proposed 100-year flood elevation? ☐ yes ☐ no				
* Recommend including a table to compare all cross sections for the PennDOT design event and the 100-year event				
c. Acceptable hydraulic methods for the site (check the method used)				
☐ HEC-RAS (bridge and culvert design, water surface profiles)				
☐ HY-8 (culvert design) ☐ HDS-5 (culvert design - equivalent to HY-8)				
☐ HEC-2 (water surface profiles) ☐ WSPRO (only if FEMA map revision necessary)				
☐ Visual Urban (HY-22 - mostly urban drainage applications)				
☐ Other List: _____				
d. Was the HEC-RAS or HY-8 checklist completed?				
e. Model validation	page _____			
(1) Calibration with high water marks, storm events, and local testimony				
(2) Explanation of model warnings and errors				
f. Estimated scour depths (refer to DM-4, Chapter 7)	page _____			
g. Riprap sizing for bank, pier, abutment, and culvert protection	page _____			
h. Construction measures (temp. stream crossings, causeways, roads, etc.)	page _____			
Supporting model or calculations included	page _____			

D-3 (3-15)

pennsylvania DEPARTMENT OF TRANSPORTATION

www.dot.state.pa.us

Hydrologic and Hydraulic Report Checklist

Project:	District:
Municipality:	County:
Reviewer(s):	Date:

DESCRIPTION		ITEM PRESENT? YES	NO	N/A
C.4. RISK ASSESSMENT OR ANALYSIS*				
Narrative description of factors related to:	page _____			
- 100-year flood				
- overtopping flood				
- 2-year flood for temporary conditions				
* Refer to Section 10.7.C.4 for the definition and additional requirements of a risk analysis				
C.5. SUMMARY DATA SHEET				
Complete all information listed in the Summary Data Sheet (Figure 10.7.1) (available for download from http://www.dot.state.pa.us/hh/Summary-Data-Sheet.Zip)	page _____			
Summary data matches the report tables, output/calculations, and TS&L				
C.6. DRAWINGS AND FIGURES				
a. Roadway plans and profiles indicating the following information:				
1. Locations of existing and proposed structures, stream channels and wetlands	page _____			
- Structure or culvert plan showing plan and elevation view (Box culvert plans should show baffle layout)				
2. Adjacent topographic features with key elevations or contours shown	page _____			
- Profile drawing showing proposed structure and ground line				
3. 100-year floodplain boundary	page _____			
4. Flood easement (if required)	page _____			
5. Temporary stream crossing, access road, cofferdam, diversion facility, etc.	page _____			
6. The magnitude, frequency and pertinent water surface elevation for specified floods	page _____			
b. Profile of stream showing bed slope, normal water surface, and flood water surface elevations	page _____			
c. Plan drawing showing the location and orientation of all cross sections used for backwater analysis (with scale, contours, and all important hydraulic features)	page _____			
Cross-sections perpendicular to flood flow (minimum):	page _____			
☐ Upstream (500 ft)				
☐ Immediately upstream of proposed and/or existing crossings				
☐ Immediately downstream of proposed and/or existing crossings				
☐ Downstream (500 ft)				
d. Floodway maps and flood profiles from FEMA Flood Insurance Studies (when in a detailed FEMA study area)	page _____			
ELECTRONIC FILES				
Electronic files provided for hydrologic & hydraulic models (as applicable)				

D-3 (3-15)

pennsylvania DEPARTMENT OF TRANSPORTATION

www.dot.state.pa.us

Hydrology Checklist
Quality Assurance Review

Project: District:

Municipality: County:

Reviewer(s): Date:

DESCRIPTION	YES	NO	N/A
1. FEMA CONSIDERATIONS			
Is the proposed project in a detailed FEMA study area?			
If yes, are the following provided:			
- Published FIS flows page _____			
- Is FEMA hydrologic method acceptable per DM-2, Chapter 10? page _____			
- Are FEMA flows compared with calculated flows using PennDOT acceptable methods?			
- Is FEMA's published 100-year flow included in the analysis?			
Comments:			
2. ACT 167			
Is there a DEP approved Act 167 Stormwater Management Plan?			
How were the flows developed in the Act 167? _____			
Were there flows provided in the vicinity of the project site?			
Have the flows been included for comparison to calculated flows? page _____			
Comments:			
3. DESIGN FLOODS			
PennDOT roadway classification _____			
PennDOT design event (check one) ☐ 10-yr ☐ 25-yr ☐ 50-yr			
PADEP event (check one) ☐ 25-yr (rural) ☐ 50-yr (suburban) ☐ 100-yr (urban)			
Comments:			
4. HYDROLOGIC ANALYSIS			
Drainage area at site (DA) is correct _____ square miles			
Applicable hydrologic method used (check all that apply)			
☐ WRC method ☐ EFH2 (1 to 2000 ac)			
☐ Rational method (up to 200 acres)* ☐ TR-55* (10 ac to 3.1 sq mi)			
☐ PSU-IV (comparison only) ☐ WinTR-55 (1ac to 25 sq mi)			
☐ USGS WRIR 2000-4189* ☐ USGS SIR 2008-5102*			
☐ HEC-1/HEC-HMS* ☐ Other**			
* Methods may be used within the Watershed Modeling System (WMS) program			
** Project Engineer should ensure that the model is appropriate and that approvals are obtained from the Department			
Which method was chosen for the design flows? _____			
Was justification provided for the selection of the peak flow method? page _____			
Comments:			

D-3 (3-15)

pennsylvania DEPARTMENT OF TRANSPORTATION

www.dot.state.pa.us

Hydrology Checklist
Quality Assurance Review

Project:	District:
Municipality:	County:
Reviewer(s):	Date:

DESCRIPTION	YES	NO	N/A
5. METHOD SELECTION DETAILS			
Fill out the appropriate section below based on the hydrologic method(s) used in Section 4.			
A. WRC Method (gage) page _____			
USGS gage # _____			
Gage location (i.e, town and stream/river name) _____			
Gage is on the same main stem as the project site			
Print out of gage record is included			
DA at gage _____ square miles			
DA_{site} is between 0.5 and 1.5 DA_{gage}			
Years of record _____			
Record is greater than 10 years			
Historic peaks (i.e., not recorded by gage) are excluded			
Record not partially influenced by regulation or diversion (e.g., reservoir, levee, etc.)			
Watershed characteristics consistent for entire record (e.g., landuse)			
Skew calculation method is appropriate (check one):			
☐ Station			
☐ Regional			
☐ Weighted			
If gage is not at project site, were flows correctly translated to the site?			

Return Period (yrs)	Q_{gage} (cfs)	Q_{site} (cfs)

Comments:

_____

_____

_____

_____

D-3 (3-15)

pennsylvania DEPARTMENT OF TRANSPORTATION

www.dot.state.pa.us

Hydrology Checklist
Quality Assurance Review

Project:		District:	
Municipality:		County:	
Reviewer(s):		Date:	

DESCRIPTION		YES	NO	N/A
B. Rational Method	page _____			
DA is less than 200 acres				
Weighted C value is correct	C = _____			
Time of concentration (T_c) is correct	T_c = _____			
Storm duration equals the T_c for intensity determination				
Rainfall intensity from PDT-IDF curves				

Return Period (yrs)	Intensity (in)	Q (cfs)

Comments:

_____

_____

_____

C. USGS WRIR 2000-4189 Method	page _____			
DA at site between 1.5 and 2,000 square miles				
Region is correct (check one)	☐ A ☐ B			
% Forest is reasonable	_____ %			
% Urban is reasonable	_____ %			
In Region B, urban % does not exceed 5%				
% Carbonate is reasonable	_____ %			
% Controlled is reasonable	_____ %			

Return Period (yrs)	Q (cfs)

Comments:

_____

_____

_____

D-3 (3-15)

pennsylvania DEPARTMENT OF TRANSPORTATION

www.dot.state.pa.us

Hydrology Checklist
Quality Assurance Review

Project:	District:
Municipality:	County:
Reviewer(s):	Date:

DESCRIPTION		YES	NO	N/A
D. USGS SIR 2008-5102 Method	page _____			
DA at site between 1.0 and 2,000 square miles				
Region is correct (check one)	☐ 1 ☐ 2 ☐ 3 ☐ 4			
% Forest is reasonable	_____ %			
% Urban is reasonable	_____ %			
% Carbonate is reasonable	_____ %			
% Storage is reasonable*	_____ %			
*surface area of lakes, ponds, wetlands, etc.				
Mean basin elevation is is correct (Region 3)				

Return Period (yrs)	Q (cfs)

Comments:

_____

_____

_____

D-3 (3-15)

pennsylvania DEPARTMENT OF TRANSPORTATION

www.dot.state.pa.us

Hydrology Checklist
Quality Assurance Review

Project:	District:
Municipality:	County:
Reviewer(s):	Date:

DESCRIPTION		YES	NO	N/A
E. PSU IV (Comparison Method Only)	page _____			
DA at site between 1.5 and 150 square miles				
Region is correct (check one)	☐ 1 ☐ ☐ ☐ 4			
Standard Deviation is correct	_____			
Skew Coefficient is correct	_____			
Divide Elevation is correct	_____ feet			
% Forest is reasonable	_____ %			
Adjustment for carbonate area applied				
Indicate other adjustments applied	_____			

Return Period (yrs)	Q (cfs)

Comments:

_____

_____

D-3 (3-15)

pennsylvania DEPARTMENT OF TRANSPORTATION

www.dot.state.pa.us

Hydrology Checklist
Quality Assurance Review

Project: District:

Municipality: County:

Reviewer(s): Date:

DESCRIPTION	YES	NO	N/A
F. TR-55 Method / WinTr-55 page _____			
DA at site is between 10 and 2,000 acres (< 3.1 square miles) for TR-55			
DA at site is between 1 acre and 25 square miles for WinTR-55			
Note if multiple drainage areas are used, attach additional sheets for CN, etc.			
CN calculated correctly CN = _____			
Time of concentration (T_c) calculated correctly _____ hrs ($0.1<T_c<10$ hr)			
Sheet flow length no greater than 100' _____ feet			
Shallow concentrated flow length appropriate _____ feet			
Channel flow length appropriate _____ feet			
Rainfall from PDT-IDF curves (24-hour duration)			
PDT-IDF Curve or SCS Type II 24-hr rainfall distribution used			

Return Period (yrs)	Rainfall (in)	Q (cfs)

Comments:

_____

_____

D-3 (3-15)

pennsylvania DEPARTMENT OF TRANSPORTATION

www.dot.state.pa.us

Hydrology Checklist
Quality Assurance Review

Project: District:

Municipality: County:

Reviewer(s): Date:

DESCRIPTION	YES	NO	N/A
G. EFH2 Method page _____			
DA at site between 1 and 2,000 acres (< 3.1 square miles)			
CN calculated correctly CN = _____			
Urban % does not exceed 10% _____ %			
Hydraulic length is between 200 and 26,000 feet _____ feet			
Average watershed slope, Y _____ %			
Y is the average overland slope between drainage divide and stream channel			
Rainfall from PDT-IDF curves (24-hour duration)			
PDT-IDF Curve or SCS Type II 24-hr rainfall distribution used			

Return Period (yrs)	Rainfall (in)	Q (cfs)

Comments:

_____

_____

D-3 (3-15)

pennsylvania DEPARTMENT OF TRANSPORTATION

www.dot.state.pa.us

Hydrology Checklist
Quality Assurance Review

Project: District:

Municipality: County:

Reviewer(s): Date:

DESCRIPTION	YES	NO	N/A
H. HEC-1 / HEC-HMS Method page _____			
DA subareas ≤ 3.1 square miles or justification provided for larger subareas			
Note if multiple drainage areas are used, attach additional sheets for CN, etc.			
CN calculated correctly CN = _____			
Lag time, t_L _____ hours			
Lag time calculated with SCS method			
If subdivided, routing was performed			
Rainfall from PDT-IDF curves (24-hour duration)			
PDT-IDF Curve or SCS Type II 24-hr rainfall distribution used			

Return Period (yrs)	Rainfall (in)	Q (cfs)

Comments:

_____

_____

D-3 (3-15)

pennsylvania DEPARTMENT OF TRANSPORTATION

www.dot.state.pa.us

Hydrology Checklist
Quality Assurance Review

Project:	District:
Municipality:	County:
Reviewer(s):	Date:

DESCRIPTION	YES	NO	N/A
I. Other Method _____ page _____			
Calculations included			
Method appropriate for location			
Rationale / justification provided			

Return Period (yrs)	Rainfall (in)	Q (cfs)

Comments:

_____

_____

_____

_____

_____

_____

_____

_____

D-3 (03-15)

pennsylvania DEPARTMENT OF TRANSPORTATION

www.dot.state.pa.us

HEC-RAS Model Checklist
Quality Assurance Review

Project: District:

Municipality: County:

Reviewer(s): Date:

1. File Management**

HEC-RAS program version _____

Project file name (*.prj) _____

Plan name for existing conditions _____

- Plan Short ID _____
- Geometry file name (*.gxx) _____
- Steady flow file name (*.fxx) _____
- Final date of run file (*.rxx) _____

Plan name for proposed conditions _____

- Plan Short ID _____
- Geometry file name (*.gxx) _____
- Steady flow file name (*.fxx) _____
- Final date of run file (*.rxx) _____

Plan name for temp conditions (if applicable) _____

- Plan Short ID _____
- Geometry file name (*.gxx) _____
- Steady flow file name (*.fxx) _____
- Final date of run file (*.rxx) _____

**The following HEC-RAS files must be submitted for review: project (*.prj), geometry (*.gxx), steady flow (*.fxx), plan (*.pxx), run (*.rxx), and output (*.oxx). The run file and output file extensions will correspond to the appropriate plan file extension.

Comments:

_____

_____

DESCRIPTION	YES	NO	N/A
2. FEMA Study (this section required if the project is in a detailed FEMA study area)			
- Hydraulic model used in the FEMA study _____ page _____			
- Was the original FEMA model obtained? (check all that apply)			
☐ Paper copy of model input page _____			
☐ Paper copy of model output page _____			
☐ Electronic files			
- If FEMA modeling data was unavailable, letter from FEMA stating such is provided?			
- Datum: FEMA _____ Project _____			
- Datum Conversion (FEMA to project): _____ ft			
- List the FEMA cross sections used as-is in existing conditions model _____ _____			
- List the FEMA cross sections modified with current survey in existing conditions model _____			
- List the new survey cross sections in existing conditions model _____ _____			
- Does the hydraulic cross section plan show all FEMA sections and surveyed sections used in the existing conditions model? page _____			

Comments:

_____

_____

_____

_____

D-3 (03-15)

pennsylvania DEPARTMENT OF TRANSPORTATION

www.dot.state.pa.us

HEC-RAS Model Checklist
Quality Assurance Review

Project: District:

Municipality: County:

Reviewer(s): Date:

DESCRIPTION	YES	NO	N/A
3. Steady Flow Data			
Boundary Conditions — Upstream / Downstream			
☐ Normal depth — S= _____ / S= _____			
☐ Known WS — WS Elev= _____ / WS Elev= _____			
☐ Critical depth			
☐ Rating curve — source= _____ / source= _____			
- Are the boundary conditions appropriate?			
- Are the same boundary conditions used in the existing and proposed models?			
- If applicable, was a known WS used for the FEMA published flow?			
Discharge Information (see also Hydrology checklist)			
- 100-year, DEP and PennDOT design events were modeled			
- Temporary conditions event modeled _____ year			
- Flows for the modeled events match peak flows in the H&H Report			
- Flow change(s) reflects tributary location(s)			
Comments:			
4. Geometric Data			
Plan Information / River System Schematic			
- Plan showing the location and orientation of all cross sections provided (with scale, contours, and all important hydraulic features) page _____			
- Number of reaches _____			
- Number of junctions _____			
- Cross section numbers increase from downstream to upstream			
Cross Section Geometry			
- Cross sections extend across 100-year floodplain			
- Cross sections are perpendicular to flow direction (except at bounding structure sections)			
- Cross sections do not overlap			
- Cross section data is entered from left to right (looking downstream)			
- Left and right bank stations: - are reasonable			
- have consistent elevations			
- Reach lengths are correct			
- Manning's n values are reasonable (Table 3.1 in Reference 1)			
- Contraction/expansion coefficients are reasonable (contr = 0.3, exp = 0.5 bounding structure sections)			
- Ineffective flow areas reflect contraction / expansion reach near hydraulic structure (Reference 2)			
- Ineffective flow areas in overbanks are used where appropriate			
- Levees are used where appropriate			
- Blocked obstructions are used where appropriate			
Comments:			

D-3 (03-15)

pennsylvania DEPARTMENT OF TRANSPORTATION

www.dot.state.pa.us

HEC-RAS Model Checklist
Quality Assurance Review

Project: District:

Municipality: County:

Reviewer(s): Date:

	DESCRIPTION	YES	NO	N/A
	Geometric Data continued			
4a.	Bridge Geometry*			
	- Plan with high/low chord elevations included page _____			
	- Bridge cross section _____ (E) _____ (P)			
	- Bounding bridge sections are at or beyond the embankment toe and parallel to each other			
	- High chord (max.) _____ (E) _____ (P)			
	- Low chord (min.) _____ (E) _____ (P)			
	- High/low chords match the report/drawings			
	- Bridge width _____ (E) _____ (P)			
	- Bridge widths match the report/drawings			
	- Distance to US section _____ (E) _____ (P)			
	- US distances match the hydraulic section plan			
	- Number of spans _____ (E) _____ (P)			
	- Normal clear span length(s) _____ (E) _____ (P)			
	- Bridge normal clear span lengths match the report/drawings			
	- Number of piers _____ (E) _____ (P)			
	- Existing pier centerline(s), width(s) and elevation(s) are correct			
	- Proposed pier centerline(s), width(s) and elevation(s) are correct			
	- Ineffective areas "turn off" when weir flow passes over bridge			
	- Minimum weir flow elevation is reasonable			
	- Bridge modeling methods Existing Proposed			
	Low flow _____ _____			
	High flow _____ _____			
	- Methods are appropriate per Reference 1			

* Check for existing (E) and proposed (P) structure; low chord elevations and normal clear span lengths are not applicable to arch structures.

Comments:

_____

_____

_____

_____

D-3 (03-15)

pennsylvania DEPARTMENT OF TRANSPORTATION

www.dot.state.pa.us

HEC-RAS Model Checklist
Quality Assurance Review

Project: District:

Municipality: County:

Reviewer(s): Date:

DESCRIPTION			YES	NO	N/A
Geometric Data continued					
4b. *Culvert Geometry					
- Plan with inverts elevations included		page _____			
- Structure cross section	_____ (E)	_____ (P)			
- Bounding culvert cross sections are at or beyond the embankment toe					
- Ineffective areas "turn off" when weir flow passes over road					
- Minimum weir flow elevation is reasonable					
	Existing	Proposed			
- Number of barrels	_____	_____			
- Shape	_____	_____			
☐ Diameter	_____	_____			
☐ Span x Rise	_____	_____			
- Spans/diameters are correct					
- Chart #	_____	_____			
- Scale #	_____	_____			
- Chart and Scale match the culvert type and entrance conditions					
- Distance to US section	_____ ft	_____ ft			
- US distances match the hydraulic section plan					
- Culvert length	_____ ft	_____ ft			
- Culvert lengths match the hydraulic section and structure plans					
- Entrance loss coeff	_____	_____			
- Exit loss coeff	_____	_____			
- Loss coefficients are appropriate for entrance/exit conditions					
- Manning's n for top	_____	_____			
- Manning's n for bottom	_____	_____			
- Manning's n for top and bottom are appropriate					
- Depth to use bottom n	_____	_____			
- Depth blocked	_____	_____			
- Blocked depth reflects the depressed depth for fish passage					
- US invert elevation	_____ ft	_____ ft			
- DS invert elevation	_____ ft	_____ ft			
- Invert elevations match the report/drawings					
- High chord (max.)	_____ ft	_____ ft			
- High chords match structure drawings					

* Check for existing (E) and proposed (P) structure

Comments:

_____

_____

_____

_____

D-3 (03-15)

pennsylvania DEPARTMENT OF TRANSPORTATION

www.dot.state.pa.us

HEC-RAS Model Checklist
Quality Assurance Review

Project:	District:
Municipality:	County:
Reviewer(s):	Date:

	DESCRIPTION	YES	NO	N/A
	Geometric Data continued			
4c.	*Roadway Profile			
	- Roadway profile plan provided page _____			
	- Roadway stations are entered from left to right (looking downstream)			
	- Roadway (high chord) stations and elevations match drawings (exist and prop)			
	- Highest roadway elevation is coded as the US side so that weir flow is correctly calculated.			
	* Check for existing (E) and proposed (P) structure			
	Comments:			
4d.	Temporary Conditions			
	- Temporary fill and/or structure(s) proposed in the channel? (check all that apply)			
	☐ Cofferdam (e.g., sheet piling, Jersey barrier, sand bags)			
	☐ Causeway			
	☐ Temporary road			
	☐ Other _____			
	- Dimension and locations match report and E&S Plan page _____			
	- Geometry reflects worst-case construction scenario (i.e., generally the most obstructed area)			
	Comments:			
5.	**Plan File**			
	Flow Regime			
	☐ Subcritical			
	☐ Supercritical			
	☐ Mixed			
	- If subcritical only, is the Froude number < 1.0 at every section?			
	- If supercritical only, is the Froude number > 1.0 at every section?			
	Comments:			

D-3 (03-15)

pennsylvania DEPARTMENT OF TRANSPORTATION

www.dot.state.pa.us

HEC-RAS Model Checklist
Quality Assurance Review

Project:	District:
Municipality:	County:
Reviewer(s):	Date:

DESCRIPTION	YES	NO	N/A
6. Output			
Existing versus Proposed Output			
- Water surface profiles are in the correct order in the cross section output			
- Is the existing low chord elevation equal to or below the proposed?			
- Hydraulic opening area stated _____ (sf) Exist. _____ (sf) Prop.			
- Is the proposed opening area equal to or larger than the existing?			
- Errors, warnings, and notes reviewed and discussed page _____			
- Are there increases at any cross section for the proposed 100-year event?			
- Existing and proposed HEC-RAS cross section plot output are included page _____			
- Existing and proposed HEC-RAS profile output are included page _____ (table & plot)			
- Output shows 100-year, DEP and PennDOT design events			
Comments: _____			
Temporary Conditions Output			
- The H&H report states that the_____ year event does not overtop the temporary measures			
- The magnitude and extent of temporary increases are quantified page _____			
- Are the temporary increases contained within the channel? page _____			
- Do the temporary wsels tie in to existing wsels within the study limits? page _____			
Comments: _____			

References

[1] Hydrologic Engineering Center. 2002. HEC-RAS, River Analysis System Hydraulic Reference Manual. U.S. Army Corps of Engineers, Davis, CA.

[2] Hydrologic Engineering Center. 1995. RD-42, Flow Transitions in Bridge Backwater Analysis, U.S. Army Corps of Engineers, Davis, CA.

D-3 (03-15)

pennsylvania DEPARTMENT OF TRANSPORTATION

www.dot.state.pa.us

HY-8 Model Checklist
Quality Assurance Review

Project: District:

Municipality: County:

Reviewer(s): Date:

DESCRIPTION	YES	NO
1. File Management		
HY-8 Version _____		
Project file name _____		
Is HY-8 Run (input/output) attached?		
Comments:		
2. Discharge Data (Crossing Properties)		
Flows Input:		
Minimum _____ cfs		
Design _____ cfs		
Maximum _____ cfs		
Discharge Information		
100-year and DEP's & PennDOT's design events were modeled		
Flows for the modeled events are correct		
Comments:		
3. Tailwater Data (Crossing Properties)		
Channel Type (check one)		
☐ Rectangular ☐ Irregular		
☐ Trapezoidal ☐ Rating Curve		
☐ Triangular ☐ Constant Tailwater Elevation		
Channel type selection is reasonable		
Channel input dimensions are consistent with plans		
Comments:		
4. Roadway Data (Crossing Properties)		
Roadway Profile Shape (check one)		
☐ Constant		
☐ Irregular		
Roadway profile dimensions are consistent with plans		
Comments:		

D-3 (03-15)

pennsylvania DEPARTMENT OF TRANSPORTATION

www.dot.state.pa.us

HY-8 Model Checklist
Quality Assurance Review

Project: District:

Municipality: County:

Reviewer(s): Date:

DESCRIPTION	YES	NO
5a. Existing Culvert Data (Culvert Properties) Culvert Name _____ Shape (check one) ☐ Circular ☐ Arch-Open Bottom ☐ Concrete Box ☐ Low Profile Arch ☐ Elliptical ☐ High Profile Arch ☐ Pipe Arch ☐ Metal Box ☐ User Defined ☐ Arch-Box-Concrete Culvert material and size: _____		
Culvert specifications are consistent with plans and/or site survey data		
Comments: _____ _____		
5b. Proposed Culvert Data (Culvert Properties) Culvert Name _____ Shape (check one) ☐ Circular ☐ Arch-Open Bottom ☐ Concrete Box ☐ Low Profile Arch ☐ Elliptical ☐ High Profile Arch ☐ Pipe Arch ☐ Metal Box ☐ User Defined ☐ Arch-Box-Concrete Culvert material and size: _____		
Culvert specifications are consistent with plans		
Comments: _____ _____		
6. Site Data (Culvert Properties) Site Data Input Option (check one) ☐ Culvert Invert Data ☐ Embankment Toe Data		
Site data is consistent with plans		
Comments: _____ _____		

D-3 (03-15)

pennsylvania DEPARTMENT OF TRANSPORTATION

www.dot.state.pa.us

HY-8 Model Checklist
Quality Assurance Review

Project:		District:	
Municipality:		County:	
Reviewer(s):		Date:	

DESCRIPTION	YES	NO
7. Results		
Overtopping?		
If yes, overtopping discharge:		
Existing _____ cfs		
Proposed _____ cfs		
Upstream 100-year water surface elevation		
Existing _____ ft		
Proposed _____ ft		
Is the proposed 100-year flood elevation greater than existing?		
Velocities		
Design storm velocity		
Existing _____ ft/s		
Proposed _____ ft/s		
100-year flood velocity		
Existing _____ ft/s		
Proposed _____ ft/s		
Results are acceptable for HY-8 use		
Entrance velocities < 5 fps		
Comments:		

Federal Highway Administration (FHWA) HY-8 Version 7.0, March 16, 2007
Software developed by: Environmental Modeling Systems, Inc.
Based on HDS-5 Documentation

D-3 (3-15)

pennsylvania DEPARTMENT OF TRANSPORTATION

www.dot.state.pa.us

Scour Analysis & Riprap Sizing Checklist
Quality Assurance Review

Project:		District:	
Municipality:		County:	
Reviewer(s):		Date:	

DESCRIPTION	YES	NO	N/A
1. Streambed Particle Size			
- D_{50} _____ in = _____ ft			
Typical D_{50} Values:			
- Method used to determine D_{50}			
☐ visual inspection ☐ sieve analysis			
☐ pebble count ☐ core boring* (see notes on applicability below)			
- Location of streambed sample _____			
- Streambed material description _____ page _____			
- Is bedrock visible?			
- Is D_{50} appropriate for studied reach?			
- Evidence of long-term streambed elevation change (aggradation or degradation)?			
* For limitations on core borings use see requirements in DM-4, Chapter 7. Also for most PA streams core borings may underestimate the size of the streambed material. If the approximate D_{100} particle size is less than the core diameter and the sample is taken in the stream channel, the core borings may provide a reasonable D_{50} for the armor layer.			
Comments: _____			
2. Contraction Scour			
HEC-RAS Sections - fill in the appropriate information from the proposed HEC-RAS model			

Clay and silt	0.00024 - 0.062 mm	
Sand	0.062 - 2.00 mm	0.002 - 0.08 in
Gravel	2 - 64 mm	0.08 - 2.5 in
Cobbles	64 - 250 mm	2.5 - 10 in

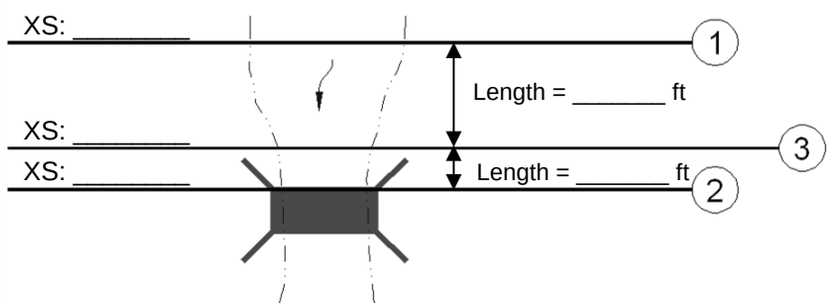

Key
1. Upstream uncontracted cross section (XS output)
2. Internal bridge cross section (BR U or BR D in HEC-RAS output)
3. Upstream bounding cross section (XS output)

Comments: _____

D-3 (3-15)

pennsylvania DEPARTMENT OF TRANSPORTATION

www.dot.state.pa.us

Scour Analysis & Riprap Sizing Checklist
Quality Assurance Review

Project: District:

Municipality: County:

Reviewer(s): Date:

DESCRIPTION	YES	NO	N/A
2 (continued)			
Critical Velocity			
- Was HEC-18, Equation 6.1 used?			
- K_u coefficient is correct (6.19 - SI units / 11.17 - English units)			
- y is channel hydraulic depth variable from XS (1)			
- V is channel velocity from XS (1)			
- 100-year scour type (check one) ☐ Clear ☐ Live			
- 500-year scour type (check one) ☐ Clear ☐ Live			
- HEC-RAS output tables are included with input parameters labeled page _____			
Comments:			
Live-Bed Scour - calculate for the event(s) determined to be live-bed*			
*Where coarse sediments are present, it is recommended that scour depths be calculated for live-bed scour conditions using the clear-water and live-bed equations, and the smaller scour depth be used.			
- Were HEC-18, Equations 6.2 and 6.3 used?			
- y_1 is channel hydraulic depth variable from XS (1)			
- y_o is hydraulic depth variable from XS (2)			
- W_1 (check one) _____ ft ☐ Top ☐ Bottom			
- W_1 is the estimated bottom or top channel width from XS (1)			
- W_2 (check one) _____ ft ☐ Top ☐ Bottom			
- W_2 is the estimated bottom or top channel width from XS (2)			
- W_1 and W_2 are consistent (both top or both bottom)			
- Q_1 is the channel flow from XS (1)			
- Q_2 is the flow in the contracted channel** from XS (2)			
- k_1 coefficient correct (0.59 - mostly contact, 0.64 - some suspended, 0.69 - mostly suspended)			
- y_s (100-yr event) _____ ft			
- y_s (500-yr event) _____ ft			
- HEC-RAS output tables are included with input parameters labeled page _____			
**If the proposed bridge abutments are located in the channel (HEC-18, Case 1a) or at the channel banks (HEC-18, Case 1b), Q_2 should be the flow through the bridge opening.			
Comments:			

D-3 (3-15)

pennsylvania DEPARTMENT OF TRANSPORTATION

www.dot.state.pa.us

Scour Analysis & Riprap Sizing Checklist
Quality Assurance Review

Project: District:

Municipality: County:

Reviewer(s): Date:

DESCRIPTION	YES	NO	N/A
Clear-Water Scour - calculate for the event(s) determined to be clear-water			
- Were HEC-18, Equations 6.4 and 6.5 used?			
- K_u coefficient is correct (0.025 - SI units / 0.0077 - English units)			
- y_o is hydraulic depth variable from XS (2)			
W (check one) _____ ft ☐ Top ☐ Bottom			
- W is the bottom or top channel width from XS (2)			
- Q is the flow through the bridge opening or on the set-back over bank area			
at the bridge associated with the width, W, from XS (2)			
- HEC-RAS output tables are included with input parameters labeled page _____			
Comments: _____			
3. Pressure Flow Scour (Vertical Contraction Scour)			
*Pressure flow scour should be calculated for all events that submerge the low chord			
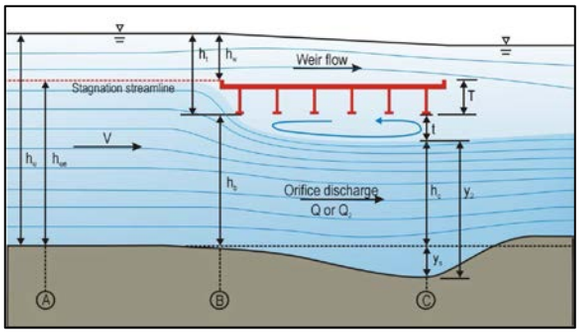			
- Were HEC-18, Equations 6.4, 6.14 and 6.16 used (Clear-water Application)?			
- Were HEC-18, Equation 6.2, 6.14, and 6.16 used (Live-bed Application)?			
- h_b, vertical size of the bridge opening prior to scour (same as Y_0) _____ ft			
- h_b dimension calculations provided/appropriate?			
- h_u Upstream channel flow depth is from XS (1) (same as y_1) _____ ft			
- h_t Distance from the water surface to the lower face of the bridge girders = h_u - h_b, ft			
- T, Height of the obstruction including girders, deck, and parapet _____ ft			
- If bridge railing has openings, T extends up to the lower edge of railing opening			
- h_t is greater than T for which event (overtopping case)? _____ year			
- h_w Weir flow height = h_t - T for h_t > T (overtopping), hw = 0 for $h_t \leq$ T (non overtopping)			
- Was h_{ue} (adjusted upstream channel flow depth) used instead of y_1 for Live bed overtopping application?			
- Was Q_{ue} calculated using HEC-18 equation 6.15 and applied in HEC-18 Equation 6.2 instead of Q_1 for Live Bed overtopping application?			
- y_s (100-yr event) _____ ft			
- y_s (500-yr event) _____ ft			
- HEC-RAS output tables are included with input parameters labeled page _____			
Comments: _____			

D-3 (3-15)

pennsylvania DEPARTMENT OF TRANSPORTATION

www.dot.state.pa.us

Scour Analysis & Riprap Sizing Checklist
Quality Assurance Review

Project: District:

Municipality: County:

Reviewer(s): Date:

DESCRIPTION	YES	NO	N/A
3. Local Pier Scour (if applicable)			
Local Pier Scour for Simple Piers			
- Was HEC-18, Equation 7.1 used?			
- Pier nose shape			
- K_1 pier nose coefficient is correct (HEC-18, Table 7.1)			
- Angle of attack of flow, θ			
(θ is 0 when the pier is aligned with the flow direction)			
- K_2 angle of attack coefficient is correct (HEC-18, Table 7.2)			
- K_3 bed condition coefficient is correct (HEC-18, Table 7.3)			
- y_1 is hydraulic depth directly upstream of the pier from XS (3) flow distribution table			
- V_1 is velocity directly upstream of the pier from XS (3) flow distribution table			
- g, acceleration of gravity (check one) ☐ 9.81 m/s^2 ☐ 32.2 ft/s^2			
- Fr_1 is the Froude number directly upstream of the pier from XS (3) and $Fr_1 = V_1 / (gy_1)^{0.5}$			
- a, pier width _____ ft			
- a is the pier width perpendicular to the flow direction (i.e., projected pier width)			
- Equation 7.32 is used to calculate effective width of weir (a^*_d) if debris is present			
and a^*_d is used instead of a in HEC-18 Equation 7.1 or Equation 7.3			
- K_1 in Equation 7.32 is either 0.79 (rectangular debris) or 0.21 (triangular debris)			
- K_w calculated with Eqn. 7.1 or 7.3 if $y/a < 0.8$, $a/D_{50} > 50$, and $Fr < 1$			
- y_s (100-yr event) _____ ft			
- y_s (500-yr event) _____ ft			
- HEC-RAS output tables are included with input parameters labeled page _____			
Comments:			
4. Total Scour			
- If live-bed contraction scour depths are limited by streambed armoring,			
was the lesser of the clear-water and live-bed contraction scour depths used?			
- If multi-layered riprap protection is proposed for the piers, was the local			
pier scour depth reduced by 50%?			
- If the structure has piers, was the total pier scour depth calculated as the sum of the contraction			
scour <u>or</u> pressure scour (whichever equation is applicable), and local scour that includes both			
the pier scour and scour from debris, if applicable.			
- Scour prism plot is illustrated on the HEC-RAS bridge section page _____			
- Total scour depths are included in the H&H Report page _____			
- If any aggradation or degradation was indicated in bridge inspection reports			
was it included with total scour?			
Total Scour Continued			
Scour depths were calculated for the temporary bridge (25-year event) per DM-4, Chap 5.			
*Note 1: Per DM-4, Chapter 7 local abutment scour calculations are not required			
when the substructure is protected with multi-layered riprap protection.			

D-3 (3-15)

pennsylvania DEPARTMENT OF TRANSPORTATION

www.dot.state.pa.us

Scour Analysis & Riprap Sizing Checklist
Quality Assurance Review

Project:	District:
Municipality:	County:
Reviewer(s):	Date:

DESCRIPTION	YES	NO	N/A
4 (continued)			
**Note 2: The use of Equations 6.2 or 6.4 in combination with Equation 6.14 incorporates the contraction of the channel and floodplain flows (lateral contraction) and pressure flow (vertical contraction).			
***Note 3: Pressure flow scour can occur even when there is no lateral contraction due to vertical contraction of the flow and the development of the flow separation zone.			
Comments:			
5. Riprap Sizing			
- Unfactored velocities			
Abutment: V_{100} _____ ft/s; V_{500} _____ ft/s — Piers: V_{100} _____ ft/s; V_{500} _____ ft/s			
- For abutments, V is the BR Open Vel variable for the velocity inside the bridge			
- For piers, V is the avg upstream velocity in the section upstream of the piers - XS (3)			
- HEC-RAS bridge output table shows inside bridge velocity page _____			
- What event has the highest velocity inside the bridge? _____ year			
- Was the highest velocity used?**			
Abutments			
- Was the 1.8 safety factor applied to the velocity before sizing the riprap?			
- Riprap size meets DM-4 Chapter 7 requirements R - _____			
Piers			
- Was the 1.5 safety factor applied to the velocity before sizing the riprap?			
- Riprap size meets DM-4 Chapter 7 requirements R - _____			
Temporary Bridge			
- Was the 1.8 safety factor applied to the 25-year velocity per DM-4, Chapter 5?			
- Riprap size meets DM-4 Chapter 7 requirements R - _____			
**Note: Per DM-4 Chapter 7, riprap has to be designed to withstand the 500-year velocity only when the 500-year scour depth is below the bottom of footing elevation. If a lower event has the highest velocity inside the bridge, it should be used for riprap sizing.			
Comments:			

US Department of Transportation, FHWA. Hydraulic Engineering Circular No. 18 (HEC-18), Evaluating Scour at Bridges, 5th Edition. April 2012.

D-3 (3-15)

pennsylvania
DEPARTMENT OF TRANSPORTATION
www.dot.state.pa.us

Additional Comments
Quality Assurance Review

Project: District:

Municipality: County:

Checklist _____ **Section** _____

Checklist _____ **Section** _____

Checklist _____ **Section** _____

Checklist _____ **Section** _____

Checklist _____ **Section** _____

Checklist _____ **Section** _____

Checklist _____ **Section** _____

CHAPTER 10, APPENDIX E

FHWA REFERENCES ON HYDROLOGY AND HYDRAULICS

1. A website for the Federal Highway Administration, Office of Bridge Technology provides current and archived information on highway hydraulics in its section titled "Hydraulics Engineering". This information includes publications and software, both current and archived. Most of the information may be downloaded or viewed in electronic format. Current and archived information includes Hydraulic Design Series (HDS), Hydraulic Engineering Circulars (HEC), and Hydraulic Reports.

2. AASHTO, 2005. *Model Drainage Manual*. AASHTO, Washington, DC.

3. AASHTO, 2006. *Highway Drainage Guidelines*. AASHTO, Washington, DC.

4. Aron, Gert and D. F. Kibler, 1981. *Procedure PSU-IV for Estimating Design Flood Peaks on Ungaged Pennsylvania Watersheds*. Pennsylvania State University, University Park, PA.

5. Aron, Gert, D. F. Kibler, E. L. White, et. al., 1981. *Field Manual of Procedure PSU-IV for Estimating Design Flood Peaks on Ungaged Pennsylvania Watersheds*. Pennsylvania State University, University Park, PA.

6. Aron, Gert, and D. J. Wall, Elizabeth L. White, Christopher N. Dunn, David M. Kotz, May 1986. *Field Manual of Pennsylvania Department of Transportation Storm Intensity-Duration-Frequency Charts PDT-IDF*. Pennsylvania State University, University Park, PA.

7. Beard, Leo R., 1962. *Statistical Methods in Hydrology*. US Army Engineer District, Corps of Engineers, Sacramento, CA.

8. Brown, S. A., S. M. Stein and J. C. Warner, 2001. *Urban Drainage Design Manual, Hydraulic Engineering Circular No. 22, Second Edition*. Report No. FHWA-NHI-01-021, Office of Bridge Technology, Federal Highway Administration, Washington, DC.

9. Bureau of Watershed Management, 2000. *Erosion and Sediment Pollution Control Manual*. Department of Environmental Protection, Commonwealth of Pennsylvania, Harrisburg, PA.

10. Bureau of Watershed Management, 2001. *Groundwater Monitoring Guidance Manual*. Department of Environmental Protection, Commonwealth of Pennsylvania, Harrisburg, PA.

11. Engineering Computing Graphics Laboratory, 1998. *Watershed Modeling System, Reference Manual*. Brigham Young University, Provo, UT.

12. Flippo, Herbert N., Jr., 1982. *Evaluation of the Streamflow-Data Program in Pennsylvania*. U.S. Geological Survey, Water-Resources Investigations 82-21, Reston, VA.

13. Ginsberg, A., 1987. *HY-8 – Culvert Analysis Microcomputer Program, Applications Guide*. Report No. FHWA-EPD-87-101, Federal Highway Administration, Washington, DC.

14. McCuen, Richard H., Peggy A. Johnson and Robert M. Ragan, 2002. *Highway Hydrology, Hydraulic Design Series No. 2, Second Edition*. Report No. FHWA-NHI-02-001, Office of Bridge Technology, Federal Highway Administration, Washington, DC.

15. HEC, 1990. *HEC-1, Flood Hydrograph Package, Computer Program Document 1A*. US Army Corps of Engineers, Hydrologic Engineering Center, Davis, CA.

16. HEC, 1982. *HEC-2, Water Surface Profiles, Users Manual*. US Army Corps of Engineers, Hydrologic Engineering Center, Davis, CA.

17. HEC, 2002. *HEC-RAS River Analysis System, Hydraulic Reference Manual*. US Army Corps of Engineers, Hydrologic Engineering Center, Davis, CA.

18. Jennings, M.E., W.O. Thomas, and H.C. Riggs, 1993. *Nationwide Summary of U.S. Geological Survey Regional Regression Equations for Estimating Magnitude and Frequency of Floods for Ungaged Sites, 1993*. Water Resources Investigations Report 94-4002, USGS Branch of Information Services, Denver, Colorado.

19. Morgan, R.D., June 25, 1982. *Procedures for Coordinating Highway Encroachments on Floodplains with the Federal Emergency Management Agency (FEMA)*. Federal Highway Administration (memorandum), Washington, DC.

20. National Resource Conservation Service, 1985. *National Engineering Handbook, Section 4, Hydrology*. US Department of Agriculture, Washington, DC.

21. National Resource Conservation Service, 1990. *Engineering Field Handbook*. US Department of Agriculture, Washington, DC.

22. National Resource Conservation Service, 2002. *WinTR-55 User Manual*. US Department of Agriculture, Washington, DC.

23. Newton, D. W. and Janet C. Herin, 1982. *Assessment of Commonly Used Methods of Estimating Flood Frequency*. Transportation Research Board, National Academy of Sciences, Record Number 896.

24. Norman, J. M., R. J. Houghtalen, and W. J. Johnston, 2001. *Hydraulic Design of Highway Culverts, Hydraulic Design Series No. 5*. Report No. FHWA-NHI-01-020, Federal Highway Administration, Washington, DC.

25. Schall, James D., and Everitt V. Richardson, 2001. *Introduction to Highway Hydraulics, Hydraulic Design Series No. 4*. Report No. FHWA-NHI-01-019, Federal Highway Administration, Washington, DC.

26. Shearman, J. O. and Arneson, L. A., 1998. *User's Manual for WSPRO – A Computer Model for Water Surface Profile Computations*. Report No. FHWA-SA-98-080, US Federal Highway Administration, Washington, DC.

27. Stuckey, Marla H., and Lloyd A. Reed, 2000. *Techniques For Estimating Magnitude and Frequency of Peak Flows For Pennsylvania Streams*, Water-Resources Investigations Report 00-4189, USGS Branch of Information Services, Denver, CO.

28. Stuckey, Marla H. and Mark A. Roland, 2008. *Regression Equations for Estimating Flood Flows at Selected Recurrence Intervals for Ungaged Streams in Pennsylvania*, Scientific Investigations Report (SIR) 2008-5102, USGS, Reston, VA.

29. U.S. Interagency Advisory Committee on Water Data, 1982. *Guidelines for Determining Flood Flow Frequency*, Bulletin #17B of the Hydrology Subcommittee: Reston, Virginia, U.S. Geological Survey, Office of Water Data Coordination, 183 p. [Available from National Technical Information Service, Springfield VA 22161, (tel 703-487-4600) as report no. PB 86 15 7278.]

30. Wahl, Kenneth L, 1983. *Determining Stream Flow Characteristics Based on Channel Cross Section Properties.* Transportation Research Board, National Academy of Sciences, Record Number 922.

31. Young, G. Kenneth, D. R. Pearson, S. M. Stein, J. S. Krolak, and A. T. Atayee, 1996. *User's Manual for, Integrated Drainage Design Computer System: Version 6.0*. Report No. FHWA-SA-96-064, Office of Technology Applications, Federal Highway Administration, Washington, DC.

32. Ries III, Kernel G., John G. Guthrie, Alan H. Rea, Peter A. Steeves, and David W. Stewart, 2008. *StreamStats: A Water Resources Web Application*, USGS Fact Sheet FS 2008–3067, USGS, Reston, VA.

33. Zevenbergen, L.W, L. A. Arneson, J. H. Hunt, and A. C. Miller, 2012. *Hydraulic Design of Safe Bridges, Hydraulic Design Series No. 7*. Report No. FHWA-HIF-12-018, Federal Highway Administration, Washington, DC.

CHAPTER 10, APPENDIX F

POLICY FOR USE OF HEC-RAS IN THE NFIP

Federal Emergency Management Agency

Washington, D.C. 20472

April 30, 2001

MEMORANDUM FOR: Hazards Study Branch, Washington, DC Office
Regional Engineers, Regions I-X
Map Coordination Contractors

[original signed]

FROM: Michael K. Buckley, P.E.
Director, Technical Services Division
Mitigation Directorate

SUBJECT: Policy for Use of HEC-RAS in the NFIP

Background:
The U.S. Army Corps of Engineers (USACE) is a leading Federal agency in the development of hydrologic and hydraulic computer modeling programs. These programs have been used throughout the history of the National Flood Insurance Program (NFIP) for flood hazard mapping and the creation of Flood Insurance Studies (FISs) and Flood Insurance Rate Maps (FIRMs). The HEC-2 computer model is one specific model that has been used extensively throughout the history of the NFIP for hydraulic calculations to determine base (1-percent-annual-chance) flood elevations (BFEs).

The Hydrologic Engineering Center of the USACE released the River Analysis System, HEC-RAS, to replace the HEC-2 hydraulic model. It is a completely new piece of software; in fact, none of the hydraulic routines from HEC-2 were used in the HEC-RAS software. This memorandum addresses the policy for the use of HEC-RAS to replace HEC-2 models for flood hazard mapping in the NFIP.

Issues:
The majority of detailed FISs and FIRMs in existence today have used the HEC-2 model to calculate BFEs. Paragraph 65.6(a)(8) of the NFIP regulations states that computer model used in support of a map revision must use the same computer model as was used in the original study. Since the USACE no longer supports the use of the HEC-2 model, FEMA must determine when it is appropriate to use HEC-RAS when the original study used HEC-2 to determine BFEs.

FEMA issued a policy statement on March 14, 1997, that explained the appropriate uses of HEC-RAS. Briefly, it stated that HEC-RAS could be used for a FIS revision or restudy when one of the following conditions had been met:

- The entire stream was rerun using HEC-RAS; or
- the stream reach remodeled using HEC-RAS was hydraulically independent from the rest of the stream, e.g. the stream was restudied from the downstream confluence with the

receiving stream (or other hydraulic control section) upstream to a dam or other hydraulic control section.

Given that the USACE replaced HEC-2 with HEC-RAS, FEMA is hereby revising its policy statement to encourage the use of HEC-RAS when appropriate, using the following guidance.

Final Procedure:

New detailed Flood Insurance Studies:

For FISs that have not yet been started, and for streams for which there is not an effective detailed study, FEMA encourages the use of HEC-RAS rather than HEC-2. Note that other computer models may also be used; FEMA's complete list of acceptable computer models may be viewed on our web site at http://www.fema.gov/fhm/en_modl.shtm . HEC-2 is still considered an acceptable hydraulic model; however the use of HEC-RAS instead of HEC-2 is strongly encouraged.

Revisions to Effective Flood Insurance Studies:

For revisions or restudies of detailed-studied streams, where the effective model is HEC-2, the conversion to HEC-RAS is encouraged. The following guidelines must be followed to convert an effective HEC-2 model to HEC-RAS.

- The effective HEC-2 model should be rerun on the requestor's computer in HEC-RAS to create the duplicate effective model. The differences in water-surface elevation between the effective model and the duplicate effective model must be fully documented and thoroughly explained. Most differences in water-surface elevation can be attributed to the (1) differences in bridge/culvert modeling routines, (2) method of conveyance calculations, (3) critical depth default, and (4) floodway computations. The *HEC-RAS User's Manual* and the *HEC-RAS Hydraulics Reference Manual* provide details on computational differences between the two models and guidance on simulating HEC-2 results; these manuals should be consulted to explain the differences between the effective and duplicate effective models.

- Once the duplicate effective model has been established, the corrected effective, existing conditions, and post-project conditions models can be created in HEC-RAS, using the duplicate effective HEC-RAS model as the basis.

- The HEC-RAS models must tie in to the effective water-surface profile within 0.5 foot at the upstream and downstream ends of the revised reach, in compliance with Subparagraph 65.6(a)(2) of the NFIP regulations.

Because the USACE has replaced the HEC-2 model with HEC-RAS, we support the use of HEC-RAS wherever practicable. I trust that this adequately explains the procedures to convert HEC-2 models to HEC-RAS for flood hazard mapping purposes in the NFIP. If you have any comments or questions, please do not hesitate to contact Ms. Sally P. Magee of our Headquarters staff in Washington, D.C. at (202) 646-8242, or by e-mail at sally.magee@fema.gov.

BLANK PAGE

CHAPTER 10, APPENDIX G

JOINT AGENCY GUIDANCE FOR PERMITTING REQUIREMENTS FOR HYDRAULIC MODELING OF TEMPORARY CONSTRUCTION ACTIVITIES

DATE: April 1, 2010

SUBJECT: Joint Agency Guidance for Permitting Requirements for Hydraulic Modeling of Temporary Construction Activities

TO: PennDOT District Executives and PADEP Program Managers

FROM: Brian Thompson, PE
Director
PennDOT Bureau of Design

Glenn Rider
Director
PA DEP Bureau of Watershed Management

The Pennsylvania Department of Transportation (PennDOT) and The Department of Environmental Protection (PA DEP) have worked jointly to develop *Joint Agency Guidance for Permitting Requirements for Hydraulic Modeling of Temporary Construction Activities*. The guidance document has been developed by a joint taskforce of PennDOT and PA DEP, representatives from PennDOT Bureau of Design and District Offices, PA DEP Central Office and Regional Offices.

The purpose of this document is to provide guidance concerning some of the issues related to the permitting of temporary structures needed to facilitate the construction of permanent bridges and culverts. Attached is a copy of the Joint Guidance document dated April 1, 2010. For PennDOT, the guidance will become part of Design Manual Part 2, Chapter 10 in the next update. For PA DEP, this document will be available online in the Chapter 105 Online Guidance Manual and should be part of PA DEP's desk manual for review of permit applications.

The guidance is available for immediate use. If you have any questions, please contact Crystal Newcomer at PennDOT at 717-787-3590 or Jeff Means at PA DEP at 717-772-5643.

Attachment

cc: Scott Christie, PE Reading File
Highway Administration Bureau Directors
PennDOT District ADE's Design
PennDOT District Bridge Engineers
PennDOT District H&H and Permit Coordinators
Sid Freyermuth, PA DEP
Ken Murin, PA DEP
Jeffrey Means, PA DEP
PA DEP T-21 Staff

Joint Agency Guidance for Permitting Requirements for Hydraulic Modeling of Temporary Construction Activities

April 1, 2010

The purpose of this document is to provide guidance concerning some of the issues relating to the permitting of temporary structures needed to facilitate the construction of permanent bridges and culverts.

One of the purposes of DEP regulation of water obstructions and encroachments, including temporary structures such as cofferdams, causeways and temporary road crossings, is to protect the health, safety, welfare and property of the people of the Commonwealth (105.2(1)). Temporary encroachments should be constructed of clean rock material to prevent stream channel sedimentation or pollution during placement, removal and periods of overtopping. The length of causeways across the stream channel should be limited as much as practicable. The design of temporary structures should consider the risk of backwater, scour and the potential loss of the structure during periods of high water. Temporary structures should be evaluated for a 2-year storm event. For temporary increases in backwater (within the 100-yr floodplain boundary) associated with the construction, operation and maintenance of temporary structures, PennDOT will determine whether or not an easement is appropriate. This determination is not required to obtain a permitting decision under Chapter 105. Granting the permit does not provide PennDOT with any property rights. See 25 Pa. Code §105.31(a). Normal flow should be maintained downstream of the structures to provide for existing in-stream water uses. The owner or applicant may be held responsible for any damages resulting from increased backwater caused by the temporary structure through common law remedies. The permittee, therefore, should consider the expected construction time period along with the associated potential for backwater and overtopping when determining the design of the temporary structure. Once the need for the temporary structures ceases, the structure should be removed and the stream channel restored to its original condition.

BLANK PAGE

CHAPTER 10, APPENDIX H

PERMIT COORDINATION PROCEDURES FOR EROSION AND SEDIMENT POLLUTION CONTROL PLAN APPROVALS AND NPDES PERMITS

Since January 28, 2000 the following permitting procedure has been agreed to by PennDOT and the Pennsylvania Department of Environmental Protection (PA DEP). This permitting procedure pertains to acceptance of permit applications for projects which also require NPDES Permit for Stormwater Discharge Associated with Construction Activities or Erosion and Sediment Pollution Control Plan approvals.

Individual permit applications for Waterway Obstruction and Encroachment Permits pursuant to 25 PA Code §105 may be submitted by PennDOT to the PA DEP for regulatory review prior to meeting the requirements of §105.13(f), which requires that Chapter 105 permit application contain proof that an application for a NPDES Permit for Stormwater Discharge Associated with Construction Activities has been submitted or that an Erosion and Sediment Pollution Control Plan for the project has been found satisfactory by the County Conservation District. PA DEP and PennDOT staffs have worked cooperatively to develop written guidance for permit applications that do not include Erosion and Sediment Pollution Control Plans. A complete copy of PA DEP's guidance is attached; however, highlights are as follows:

1. PA DEP will accept and review PennDOT's Chapter 105 permit applications without accompanying information related to Erosion and Sediment Pollution Control Plans. When the permit application satisfies all other administrative and technical requirements of Chapter 105, PA DEP will notify PennDOT by letter that the permit application is in compliance with Chapter 105, and PA DEP will attach an unsigned Chapter 105 permit containing all pertinent standard and special permit conditions. PA DEP will not sign and issue the permit until after the Erosion and Sediment Pollution Control Plan is approved, or the NPDES Permit is issued for the project.

2. When PennDOT receives approval of the Erosion and Sediment Pollution Control Plan, or the NPDES Permit for Stormwater Discharge Associated with Construction Activities, PennDOT MUST forward a copy of the approval letter, or the NPDES permit, to the PA DEP Regional Office. After PA DEP receives these items, PA DEP will complete the permit coordination process and issue the signed Chapter 105 permit.

3. The Chapter 105 permit application MUST contain ALL temporary and permanent water obstructions and encroachments associated with the project so that the project can be reviewed as a single and complete project. PennDOT must ensure that all stream diversions, cofferdams, causeways, temporary roads, and other water obstructions or encroachments, and all environmental impacts that may result from the proposed waterway encroachments are included in the application. When uncertainty exists about the need for a specific encroachment item, PennDOT should include the item in the permit application. This should eliminate the need for a subsequent permit amendment, which may be more difficult to process when Chapter 105 permit applications and Erosion and Sediment Pollution Control Plans are being processed independently.

4. This change in permit coordination does NOT affect PennDOT's obligations or regulatory requirements related to Erosion and Sediment as required by 25 PA Code §102 or the National Pollutant Discharge Elimination System (NPDES).

5. Copies of the Chapter 105 permits, Erosion and Sediment Pollution Control Plans, and NPDES permits will be included in the bidding and construction document packages to ensure that construction personnel are aware that they are responsible to implement the Erosion and Sediment Pollution Control Plan and to comply with permit conditions.

6. PennDOT will ensure that construction contractors are added to NPDES permits as co-permittees.

A copy of PA DEP's Chapter 105 permit transmittal letter and a copy of the permit including standard and special permit conditions are required items for approval of TS&L submissions to the Bridge Design and Technology Division.

COMMONWEALTH OF PENNSYLVANIA
Department of Environmental Protection
Bureau of Water Quality Protection
December 15, 1999
717-787-6827

SUBJECT: Permit Coordination

TO:

Bob Thompson, Section Chief
Soils and Waterways Section
Northwest Regional Office

Larry Busack, Section Chief
Soils and Waterways Section
Southwest Regional Office

Al Sever, Section Chief
Soils and Waterways Section
Northcentral Regional Office

Ray Zomok, Section Chief
Soils and Waterways Section
Southcentral Regional Office

John Chernesky, Section Chief
Soils and Waterways Section
Northeast Regional Office

Domenic Rocco, Section Chief
Soils and Waterways Section
Southeast Regional Office

FROM: Ken Reisinger, Chief
Division of Waterways, Wetlands and Erosion Control
Bureau of Water Quality Protection

After much discussion and deliberation, the attached guidance for coordination of PennDOT's highway development process, Chapter 105 permits, and Erosion and Sediment Control Plan approvals has been finalized. This process should serve to remove some of the controversy and impediments to highway project development and environmental permit approvals. Please implement this permit process immediately. If problems arise, contact me at your convenience.

Attachments

cc: Marrocco
Newman, PennDOT
File W74:30
Reading File

12/10/99

PERMIT COORDINATION

Chapter 105 Permit Processing Procedure
Pennsylvania Department of Transportation Projects
and
Erosion and Sediment Control Plan Approvals

PROBLEM: Persons applying for Chapter 105 Water Obstruction and Encroachment Permits are required by the regulations to include with the application proof that an application for an NPDES Permit for Stormwater Discharge Associated with Construction Activities has been submitted to the County Conservation District, or a letter from the County Conservation District that indicates that an Erosion and Sediment Control Plan has been reviewed and considered satisfactory for the project. Without this information or a specific waiver of the information in accordance with 105.13(j), the permit application is not administratively complete and cannot be accepted for processing and approval. This permit application requirement, found at 105.13(f), applies to all permit applications with the exception of Small Project Permit applications.

The Department of Transportation's (PennDOT) highway construction project planning, design, and construction process requires that Chapter 105 Water Obstruction and Encroachment permits for the type, size, and location (TS&L) of bridges, culverts, or other water obstructions and encroachments be obtained before the final design phase of the project commences. PennDOT implements this process to ensure that design time and project dollars are not wasted on detailed final designs that are subject to modification or change during the Chapter 105 permit review and approval process.

The development of an Erosion and Sediment Control Plan which meets the requirements of Chapter 102 and an NPDES Permit for Stormwater Discharge Associated with Construction Activities depends on site specific details that are not normally prepared until after PennDOT receives the final review and approval of the TS&L including an approved 105 permit. Essentially, DEP's Chapter 105 permit application requirements and PennDOT's project development procedures contain interdependent requirements creating an unsynchronized process which has on occasion created, and continues to create, permitting and project hurdles for both agencies.

BACKGROUND: DEP and PennDOT staff have cooperatively worked together to move permit applications through the permit application and review process in a variety of fashions to manage these permit and project development inconsistencies. Nevertheless, in the absence of clear guidance, staff within both agencies is, on more than an occasional basis, challenged and confounded when attempting to process PennDOT permit applications. A permanent long term programmatic solution to this interagency issue is required to enable both agencies to more effectively meet their respective obligations to the citizens of the Commonwealth in the provision of safe and efficient transportation facilities and the protection of the environment.

1

Section 105.13(j) of the Dam Safety and Waterway Management regulations provides the authority to waive permit application requirements where the Department finds that specific information is not necessary to review the permit application. This provides the Department with the flexibility to eliminate or reduce information requirements where such information is clearly redundant to another process or not necessary for processing the permit application. The regulations require that the reason for the waiver of information requirement be stated in writing, in the permit record of decision that is used to document the Department's review and decision process.

PennDOT, as a state agency, ensures that transportation projects comply with all state and federal laws and have the appropriate authorizations before they are available for competitive bidding and construction. This requirement is a critical component of PennDOT's commitment to the provision of public service, relating to transportation, including the protection of the Commonwealth's environmental resources. All PennDOT projects, including those which are not subject to the permitting requirements of the Chapter 105 program, must comply with the requirements found in Chapter 102 (Erosion and Sediment Control), and NPDES Permit for Stormwater Discharges Associated with Construction Activities (where applicable). Specifically:

> PennDOT's Final Draft Design Manual Part 1A, (anticipated publication date of January 2000), Chapter 7.0, specifies that the final design begins after approval of the environmental documentation. Chapter 7.1 identifies Erosion and Sediment Control Plans as a component of a Final Design Plan. Chapter 7.9 references DEP's Erosion and Sediment Control Program Manual and Erosion and Sediment Control Plan Development Checklist as providing the specifications for the final design of Erosion and Sediment Control Plans. Final design begins after approval of preliminary engineering document which includes TS&L.
>
> Chapter 13 of the Design Manual Part 2 provides the design specifications for Erosion and Sediment Control Plans for highway construction projects.
>
> Chapter 6 of the Design Manual Part 3, requires that Erosion and Sediment Control Plans be submitted to County Conservation Districts for their review and approval.
>
> PennDOT's Specifications 1994, Pub. 408, provides the Legal Relations and Responsibilities to the Public. Section 107.27 requires work to be done in accordance with all approvals by DEP. Section 107.28 specifically requires the implementation of erosion and sediment devices as indicated on plans. This section also requires approval from the County Conservation District for any changes to the Erosion and Sediment Control Plans or for amendments to NPDES permits.

Overall, these PennDOT procedures clearly require all highway construction projects be conducted with approved Erosion and Sediment Control Plans.

RECOMMENDATION: Recognizing the project and permit coordination constraints, and PennDOT's obligation to comply with all state permit requirements, DEP believes that it is in the mutual interest of both Departments to waive the requirement that an Erosion and Sediment Control Plan or approval must be included as part of a Chapter 105 permit application for highway construction projects for purposes of administrative completeness and technical reviews. **This administrative change does not eliminate the requirements for PennDOT to obtain an NPDES Permit for Stormwater Discharges Associated with Construction Activities, develop Erosion and Sediment Control Plans, or to have Erosion and Sediment Control Plans reviewed and approved by County Conservation Districts or the Department in the case of a non-delegated county, prior to Chapter 105 permit issuance.***

PROCESS: Applications submitted for Chapter 105 Water Obstruction and Encroachment permits must include all temporary and permanent water obstructions and encroachments associated with the project so the project can be reviewed as a single and complete project. The application shall show the locations of all permanent and temporary water obstructions and encroachments necessary for the construction of the project, including stream diversions, cofferdams, causeways, temporary roads, and other water obstructions and encroachments, and also include an environmental assessment of all potential environmental impacts that may result from those water obstructions and encroachments.

Water Obstruction and Encroachment Permit applications will be reviewed in accordance with the requirements of Chapter 105. Once the project meets the engineering and environmental requirements of Chapter 105, DEP will notify PennDOT by letter (see Attachment A) that the type, size, and location of the water obstruction and encroachment is in compliance with Chapter 105 Rules and Regulations and, in accordance with established Department procedures, the 105 permit will not be issued until permit coordination is complete and the erosion and sediment control plan required by 105.13 (f) is considered to be satisfactory. A copy of the unsigned Chapter 105 permit with the standard and special conditions will be included with the letter to facilitate the continuation of PennDOT's project development process. After receiving approval of the Erosion and Sediment Control Plan or the NPDES Permit for Stormwater Discharges Associated with Construction Activities from the Conservation District, or DEP in the case of a non-delegated district, PennDOT will forward the notice of the Erosion and Sediment Control Plan approval to the DEP Regional Office to complete the permit coordination process and DEP will issue the Chapter 105 permit.

PennDOT will include the approved Chapter 105 permit and Erosion and Sediment Control Plan in all available project construction documents to ensure potential contractors are aware of the entire scope of the project including the obligation to implement the Erosion and Sediment Control Plan as approved by the County Conservation District or appropriate DEP Regional Office, in the case of a non-delegated District. Where an NPDES Permit is required, it will also be included in the project construction documents. Once a contractor has been approved and selected, PennDOT will ensure the contractor is added to the NPDES Permit utilizing DEP's Co-Permittee/Transferee Form.

*NOTE: Small project permits do not require approved Erosion and Sediment Control Plans prior to the issuance of Chapter 105 Permits. This process does not change that regulatory provision.

3

ATTACHMENT A
Sample Letter

Address
Date

_____ **Regional Office**

Phone:_____

District Engineer
PennDOT District _____
_____
_____

Re: Water Obstruction & Encroachment Permit
DEP File No. E _____ & APS# _____

Dear

We are pleased to inform you that the technical review of your permit application has been completed and your application has been found to be in compliance with the Department's Chapter 105 rules and regulations. However, the permit cannot be issued at this time since it must be coordinated with other Department permits as well as Erosion and Sediment Control Plan approval. Please forward the approval of the Erosion and Sediment Control Plan to this office when it is available. You will be advised when the other Department authorizations have been completed.

If you have any questions, please contact this office at the above number.

Sincerely,

Water Management Program

Attachment: Permit E _____ (unsigned w/conditions)

4

CHAPTER 10, APPENDIX I

CLARIFICATION OF CONSISTENCY LETTER REQUIREMENTS FOR STORMWATER MANAGEMENT ANALYSIS AND FLOODPLAIN MANAGEMENT ANALYSIS

pennsylvania
DEPARTMENT OF ENVIRONMENTAL PROTECTION

MEMO

TO Regional Watershed Managers
Regional Soil and Waterway Section Chiefs

FROM Ken Murin, Chief, Division of Waterways, Wetlands and Stormwater Management

DATE January 8, 2009

RE Stormwater Management Analysis - Clarification of Consistency Letter Requirements per Chapter 105, Section 105.13(d)(1)(v)

As a part of the Chapter 105 application review process, consistency letters from counties and municipalities for stormwater plans are required only in those watersheds with a stormwater plan developed in accordance with the Stormwater Management Act (32 P.S. §§ 680.1 – 680.17) commonly referred to as Act 167 that has been approved by the Department and adopted by the County and local municipalities. There is no requirement by the Act that a County or local municipality provide consistency letters for projects covered by their stormwater plans. In the event that an applicant is unable to obtain a consistency letter from the County or local municipality, the Department will determine whether the proposed project is consistent based upon all other Chapter 105 and Chapter 106 requirements.

To facilitate the Department's review the applicant should provide a copy of the letter (with proof of receipt) sent to both the County and local municipality requesting a review of the project for consistency with the approved stormwater plan and allow them a minimum of (30) days to comment on whether or not a consistency letter will be provided along with the expected time frame for the completion of the review and preparation of the consistency letter. One consistency letter provided by **either** the County or local municipality will be sufficient, a response is not required by both.

If the applicant receives correspondence from the municipality indicating that a consistency letter will not be provided with respect to the approved stormwater plan, the applicant should include that notification along with a copy of the original letter to the County and municipality (with proof of receipts) as a part of the application package. The applicant should include a statement from the Project Manager indicating that the project location, design and proposed construction is in accordance with the approved stormwater plan.

In the event that the applicant receives no response from either the County or local municipality within the specified 30 day period (after proof of receipt) indicating that a review of the project will take place and/or a consistency letter will be provided; the applicant should send a second letter to both the County and municipality indicating that it is the applicant's intent to proceed with the project and that any future comments regarding consistency with the approved stormwater plan be directed to the appropriate regional office of DEP, permitting and technical services section (or other section as appropriate). The applicant should include a statement from the Project Manager indicating that the project location, design and proposed construction is in accordance with the approved stormwater plan.

P.O. Box 2063, Harrisburg, PA 17105 | 717.787.2814 | www.depweb.state.pa.us

pennsylvania
DEPARTMENT OF ENVIRONMENTAL PROTECTION

MEMO

TO Regional Watershed Managers
Regional Soil and Waterway Section Chiefs

FROM Ken Murin, Chief, Division of Waterways, Wetlands and Stormwater Management

DATE January 8, 2009

RE Clarification of Consistency Letter Requirements per Chapter 105, Section 105.13(d)(1)(vi) Floodplain Management Analysis

As a part of the Chapter 105 application review process, a letter from the local municipality commenting on floodplain consistency is only required if the proposed dam, water obstruction or encroachment is located within a floodway delineated on a FEMA map. There is no requirement within the Floodplain Management Act (32 P.S. § 679.101 et seq.), compelling a local municipality to provide consistency letters for projects located within the floodway. In the event that and applicant is unable to obtain a consistency letter from the local municipality, the Department will determine whether the proposed project is consistent with the Act or other National Flood Insurance Minimum Standards based upon all other Chapter 105 and Chapter 106 requirements.

To facilitate the Department's review the applicant should provide a copy of the letter (with proof of receipt) sent to the local municipality requesting a review of the project for consistency with floodplain management ordinances and allow the municipality a minimum of (30) days to comment on whether or not a consistency letter will be provided along with the expected time frame for the completion of the review and preparation of the consistency letter.

If the applicant receives correspondence from the municipality indicating that a consistency letter will not be provided for the project, the applicant should include that notification along with the copy of the original letter to the municipality (with proof of receipt) as a part of the application package.

In the event that the applicant receives no response from the local municipality within the specified 30 day period (after proof of receipt) indicating that a review of the project will take place and/or a consistency letter will be provided; the applicant should send a second letter to the municipality indicating that it is the applicant's intent to proceed with the project and that any future comments regarding consistency with the local floodplain management ordinances be directed to the appropriate regional office of DEP, permitting and technical services section (or other section as appropriate).

P.O. Box 2063, Harrisburg, PA 17105 | 717.787.2814 | www.depweb.state.pa.us

BLANK PAGE

CHAPTER 11

PAVEMENT DESIGN

11.0 INTRODUCTION

The policies, guidelines and procedures for the construction, restoration, rehabilitation, resurfacing and reconstruction of pavement structures for all Department projects shall conform to the current Publication 242, *Pavement Policy Manual*.

CHAPTER 12

GUIDE RAIL, MEDIAN BARRIER AND ROADSIDE SAFETY DEVICES

12.0 INTRODUCTION

Highways should be designed to preclude or minimize the need for roadside or median barrier. To provide for maximum roadside safety, a thorough study during the early stages of design is necessary to recognize and eliminate, where practical, those items and conditions which require installation of barrier and impact attenuating devices.

While every reasonable effort should be made to keep a vehicle on the roadway, the highway design engineer should acknowledge the fact that this goal will never be fully realized. Vehicles continue to run off the road for many reasons, including driver error in the form of excessive speed, falling asleep, reckless or distracted driving, or driving while impaired or under the influence of alcohol or other drugs. A driver may also leave the road deliberately to avoid a collision with another motor vehicle or with objects on the road.

The consistent application of geometric design standards for roads and streets provides vehicles with a high degree of safety. Design features such as horizontal and vertical curvature, pavement and shoulder width, and signing and pavement markings each play an important role towards achieving the desired level of safety. Roadside safety features, such as breakaway supports, bridge railings and impact attenuating devices provide an extra margin of safety to vehicles who inadvertently leave the roadway. Most appurtenances are installed based on an analysis of their safety benefits to the vehicles. In some instances, however, it may not be immediately obvious that the benefits to be gained from a specific safety design feature or treatment equal or exceed the additional costs. The design engineer must decide how and where limited funds should be spent to achieve the greatest overall benefits.

The vehicles traveling on bridges require a high level of protection because of the potential consequences. Select railing system Test Levels in accordance with the criteria of Section 12.11.

The following policy and information should be used as a guide and should be supplemented with sound engineering judgment. Document engineering judgment determinations in the project files. For additional guidelines, refer to Publication 72M, *Roadway Construction Standards*, for typical guide rail and median barrier placement and installation details. The AASHTO Roadside Design Guide is a good reference and provides additional information.

12.1 THE CLEAR ZONE CONCEPT

Policy and/or guidelines presented in this Chapter, relative to clear zone, are applicable to all projects including New Construction, Reconstruction, Resurfacing, Restoration, and Rehabilitation (3R), and Pavement Preservation projects. For 3R and Pavement Preservation projects, where major upgrading to horizontal or vertical alignment is not practical, clear zone widths less than those indicated in Table 12.1 may be suitable for attainment or retention. The cost of full reconstruction for these facilities will often not be justified. The designer must do specific site investigation and crash history analysis to determine a cost-effective design by selectively upgrading the roadway and roadside to optimize the clear zone widths. Consideration must be given to the location and type of obstruction, existing roadway geometry and right-of-way widths, the ability to improve existing roadway geometry, signing and pavement marking, the ability to acquire additional right-of-way, and the costs and benefits involved.

Clear zone is defined as the total roadside border area, starting at the edge of traveled way, available for safe use by errant vehicles. This area may consist of a shoulder, a recoverable slope, a non-recoverable slope, and/or a clear run-out area. The width of the clear zone is influenced by the traffic volume, the design speed and embankment slope. The clear zones may include shoulders, bike lanes, and auxiliary lanes, except those auxiliary lanes that function as through lanes.

Table 12.1 can be used to determine the clear zone width recommended for selected traffic volumes, design speeds and embankment slopes. Clear zone widths shown in Table 12.1 represent values that are extrapolated from the curves in the AASHTO Roadside Design Guide and are a general approximation since they are based on limited empirical data.

TABLE 12.1
CLEAR ZONE WIDTH
(in feet from edge of through traveled way)

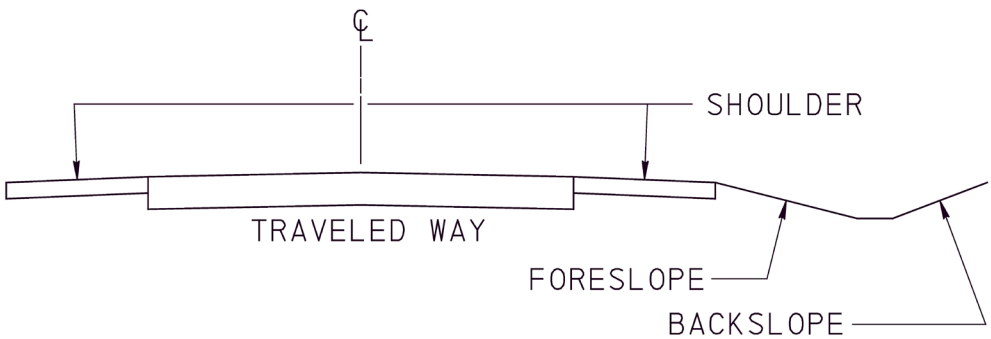

DESIGN SPEED	DESIGN ADT	FORESLOPE (FILL SECTION)			BACKSLOPE (CUT SECTION)		
		1V:6H OR FLATTER	1V:5H TO 1V:4H	1V:3H	1V:3H	1V:5H TO 1V:4H	1V:6H OR FLATTER
40 mph or less	Under 750	7	7	**	7	7	7
	750 - 1500	10	12	**	10	10	10
	1500 - 6000	12	14	**	12	12	12
	Over 6000	14	16	**	14	14	14
45-50 mph	Under 750	10	12	**	8	8	10
	750 - 1500	14	16	**	10	12	14
	1500 - 6000	16	20	**	12	14	16
	Over 6000	20	24	**	14	18	20
55 mph	Under 750	12	14	**	8	10	10
	750 - 1500	16	20	**	10	14	16
	1500 - 6000	20	24	**	14	16	20
	Over 6000	22	26	**	16	20	22
60 mph	Under 750	16	20	**	10	12	14
	750 - 1500	20	26	**	12	16	20
	1500 - 6000	26	30	**	14	18	24
	Over 6000	30	30	**	20	24	26
65-70 mph	Under 750	18	20	**	10	14	14
	750 - 1500	24	28	**	12	18	20
	1500 - 6000	28	30	**	16	22	26
	Over 6000	30	30	**	22	26	28

** Since recovery is less likely on the unshielded, traversable 1V:3H slopes, consider removal of fixed objects present beyond the toe of these slopes. Determination of the width of the recovery area provided, if any, at the toe of slope should take into consideration right-of-way availability, environmental concerns, economic factors, safety needs, and crash histories. Also, the distance between the edge of the through traveled lane and the beginning of the 1V:3H slope should influence the recovery area provided at the toe of slope.

Note: Foreslopes and Backslopes within the clear zone on Interstates and freeways are typically 1V:6H or flatter and should not be steeper than 1V:4H.

When obstructions exist behind curbs, a minimum horizontal clearance of 1.5 ft should be provided beyond the face of curbs to the obstructions. This offset may be considered the minimum allowable horizontal clearance (or operational offset), but **IT SHOULD NOT BE CONSTRUED AS AN ACCEPTABLE CLEAR ZONE DISTANCE**. Since curbs do not have a significant redirectional capability, obstructions behind a curb should be located at or beyond the minimum clear-zone distances shown in Table 12.1. In many instances, it will not be practical to obtain the recommended clear zone distances on existing facilities. On New Construction where minimum recommended clear zones cannot be provided, fixed objects should be located as far from traffic as practical on a project-by-project basis, but in no case closer than 1.5 ft from the face of the curb.

The designer must keep in mind site-specific conditions, design speeds, rural versus urban locations, and practicality. The numbers in Table 12.1 suggest only the approximate values to be considered and not a precise distance to be held as absolute.

The designer may choose to modify the clear zone width obtained from Table 12.1 for horizontal curvature by using the horizontal curve adjustment factors in Table 12.2. These modifications are normally considered only where crash histories indicate a need, or a specific site investigation shows a definitive crash potential. This crash potential could be significantly lessened by increasing the clear zone width, provided such increases are cost-effective. Horizontal curves, particularly for high-speed facilities, are usually superelevated to increase safety and to provide a more comfortable ride.

For relatively flat and level roadsides, the clear zone concept is simple to apply. Application is more complex when the roadway is in a fill or cut section where roadside slopes may be either positive, negative, or variable, or where a ditch exists near the traveled way. For additional clear zone information refer to the 2011 AASHTO Green Book and the AASHTO Roadside Design Guide.

A. Foreslopes. Foreslopes parallel to the flow of traffic may be identified as recoverable, non-recoverable, or critical. Recoverable foreslopes are 1V:4H or flatter. If such slopes are relatively smooth and traversable, the suggested clear zone width may be taken directly from Table 12.1. Motorists who encroach on recoverable foreslopes can generally stop their vehicles or slow them enough to return to the roadway safely.

A non-recoverable foreslope is defined as one that is traversable, but from which most vehicles are unable to stop or to return to the roadway easily. Vehicles traversing such slopes typically can be expected to reach the bottom. Foreslopes between 1V:3H and 1V:4H generally fall into this category. Since a high percentage of encroaching vehicles may reach the toe of these slopes, the clear zone distance cannot logically end on the slope. Fixed obstacles are normally not constructed along such slopes and a clear runout area at the base is desirable. Figure 12.1 provides an example of parallel embankment slope design thru recoverable and non-recoverable slopes. The basic philosophy behind the recovery area is that a vehicle can traverse a 1V:3H slope but is not likely to recover (control steering) and therefore, recovery may be expected to occur beyond the toe of slope. Determination of the width of the clear zone distance at the toe of slope should take into consideration right-of-way availability, environmental concerns, economic factors, safety needs and crash history.

A critical foreslope is one which a vehicle is likely to overturn. Foreslopes steeper than 1V:3H generally fall into this category. If a foreslope steeper than 1V:3H begins closer to the through traveled way than the suggested clear zone width for that specific roadway, a roadside barrier might be needed (Table 12.6) if the slope cannot readily be flattened.

B. Backslopes. When a highway is located in a cut section, the backslope may be traversable depending upon its relative smoothness and the presence of fixed obstacles. If the foreslope between the roadway and the base of the backslope is traversable (1V:3H or flatter) and the backslope is obstacle-free, it may not be a potential concern, regardless of its distance from the roadway. <u>On the other hand, a steep, rough-sided rock cut should normally begin outside the clear zone or be shielded. A rock cut is normally considered to be rough-sided when the face can cause excessive vehicle snagging rather than provide relatively smooth redirection.</u>

TABLE 12.2
HORIZONTAL CURVE ADJUSTMENTS
K_{cz} (CURVE CORRECTION FACTOR)

RADIUS (ft)	DESIGN SPEED (mph)						
	40	**45**	**50**	**55**	**60**	**65**	**70**
2950	1.1	1.1	1.1	1.2	1.2	1.2	1.2
2300	1.1	1.1	1.2	1.2	1.2	1.2	1.3
1970	1.1	1.2	1.2	1.2	1.3	1.3	1.4
1640	1.1	1.2	1.2	1.3	1.3	1.3	1.4
1475	1.2	1.2	1.3	1.3	1.4	1.4	1.5
1315	1.2	1.2	1.3	1.3	1.4	1.4	—
1150	1.2	1.2	1.3	1.4	1.5	1.5	—
985	1.2	1.3	1.4	1.5	1.5	1.5	—
820	1.3	1.3	1.4	1.5	—	—	—
660	1.3	1.4	1.5	—	—	—	—
495	1.4	1.5	—	—	—	—	—
330	1.5	—	—	—	—	—	—

$CZ_c = (L_c)\ (K_{cz})$

Where: CZ_c = CLEAR ZONE WIDTH ON OUTSIDE OF CURVATURE (ft)
L_c = CLEAR ZONE WIDTH (ft), TABLE 12.1
K_{cz} = CURVE CORRECTION FACTOR

Note: THE CLEAR ZONE CORRECTION FACTOR IS APPLIED TO THE OUTSIDE OF CURVES ONLY. CURVES WITH RADII GREATER THAN 2950 ft DO NOT REQUIRE AN ADJUSTED CLEAR ZONE WIDTH.

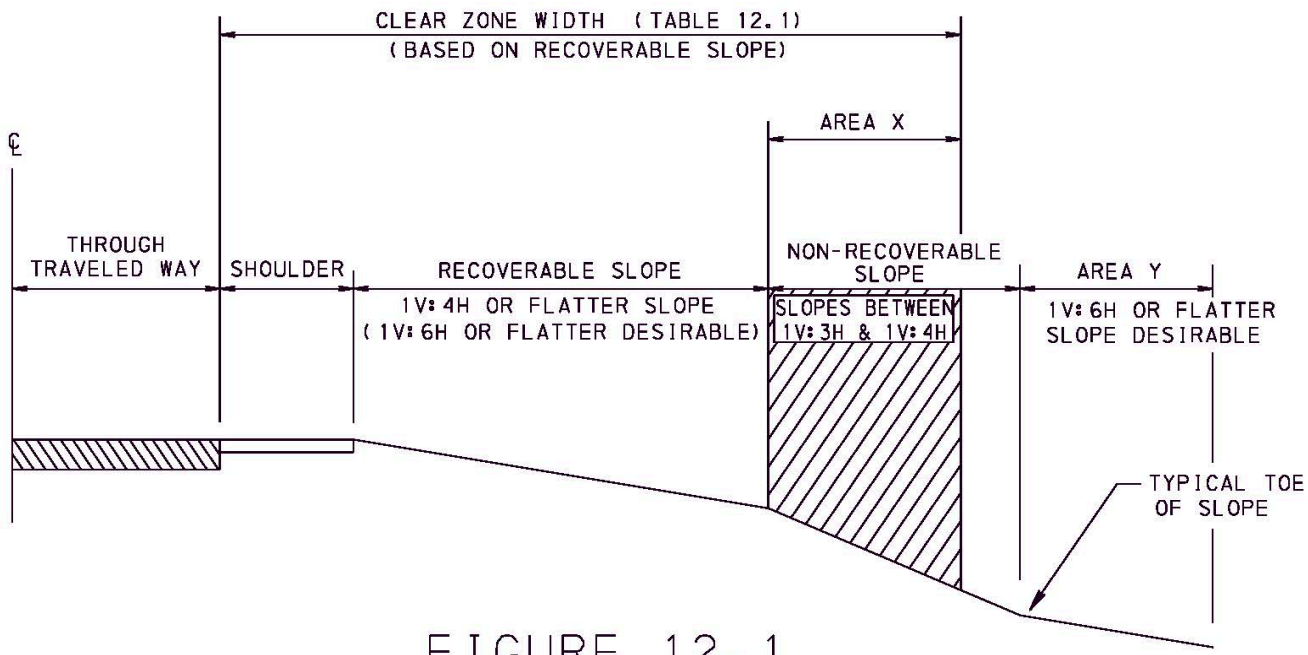

FIGURE 12.1

EXAMPLE OF A PARALLEL EMBANKMENT SLOPE DESIGN

THIS FIGURE ILLUSTRATES A RECOVERABLE SLOPE FOLLOWED BY A NON-RECOVERABLE SLOPE. SINCE THE CLEAR ZONE WIDTH EXTENDS ONTO A NON-RECOVERABLE SLOPE, THE PORTION OF THE CLEAR ZONE WIDTH ON SUCH A SLOPE MAY BE PROVIDED BEYOND THE NON-RECOVERABLE SLOPE IF PRACTICAL.

NOTE:

A. WHEN THE ENTIRE SLOPE IS RECOVERABLE, THE RECOVERY AREA EQUALS THE CLEAR ZONE WIDTH.

B. AREA X IS EQUAL TO AREA Y. IF AREA Y IS LESS THAN 10 ft, USE 10 ft.

C. Transverse Slopes. Common obstacles on roadsides are transverse slopes created by berms, driveways or intersecting side roads. These are generally more critical to errant vehicles than foreslopes or backslopes because they are typically struck head-on by run-off-the-road vehicles. Transverse slopes of 1V:6H or flatter are suggested for high-speed roadways, particularly for that section of the transverse slope that is located immediately adjacent to traffic. This slope can then be transitioned to a steeper slope as the distance from the through traveled way increases.

Transverse slopes of 1V:10H are desirable; however, their practicality may be limited by width restrictions and the maintenance problems associated with the long-tapered ends of pipes or culverts. Transverse slopes steeper than 1V:6H may be considered for urban areas or for low-speed facilities.

For transverse slope requirements at locations for median crossovers, refer to Chapter 2, Section 2.18.U.

12.2 BREAKAWAY SUPPORTS

The term "breakaway support" refers to all types of signs, luminaire and traffic signal supports that are designed to yield, fracture, or separate when impacted by a vehicle. The release mechanism may be a slip plane, plastic hinge, fracture element or a combination thereof. The criteria used to determine if a support is considered breakaway are presented in:

- AASHTO *Standard Specifications for Structural Supports for Highway Signs, Luminaires, and Traffic Signals*
- National Cooperative Highway Research Program (NCHRP) Report 350, *Recommended Procedures for the Safety Performance Evaluation of Highway Features*
- AASHTO *Manual for Assessing Safety Hardware* (MASH)
- AASHTO Roadside Design Guide

Testing criteria is acceptable either from MASH 2016 or NCHRP Report 350 for new permanent installations.

NCHRP Report 350 and MASH 2016 criteria require that a breakaway support perform in a predictable manner when struck head-on by a vehicle, at speeds from 19 mph to 62 mph. Limits are placed on the transverse and longitudinal components of the occupant impact velocity and the crash vehicle should remain stable and upright during and after the impact with no significant deformation or intrusion of the windshield or passenger compartment. These specifications also establish a maximum stub height of 4 in to lessen the possibility of snagging the undercarriage of a vehicle after a support has broken away from its base (see Figure 12.2).

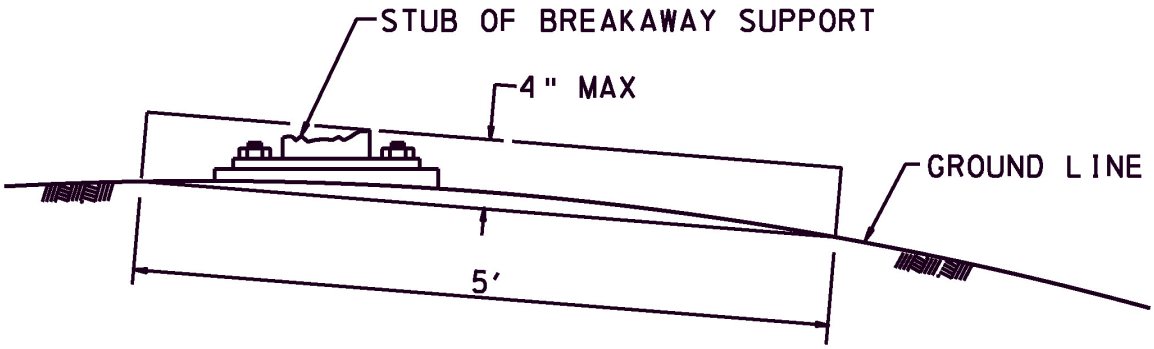

FIGURE 12.2
BREAKAWAY SUPPORT STUB HEIGHT MEASUREMENTS

As a general rule, breakaway supports should be used unless an engineering study indicates otherwise. However, concern for pedestrian involvement has led to the use of fixed supports in some urban areas. Examples of sites where breakaway supports may be imprudent are adjacent to bus shelters or in areas of extensive pedestrian concentrations.

12.3 TRAFFIC BARRIER UPDATES AS PART OF NEW CONSTRUCTION, RECONSTRUCTION, 3R, PAVEMENT PRESERVATION AND BRIDGE PROJECTS

As part of New Construction, Reconstruction, 3R, Pavement Preservation and Bridge projects, an evaluation is required of the existing traffic barrier systems, including the non-crashworthy and crashworthy end treatments, i.e., Types I, II, III, IV, V, and VI as defined in Section 12.9.E. The evaluation should include a review of the roadside and median to determine if additional barrier is needed or if current barrier is unnecessary. For example, determine if a bridge pier or abutment in the clear zone should be protected that is currently not protected**.**

Within the work limits of these projects, the requirements are noted below for installing and/or updating all traffic barrier systems to the standards in this Chapter and to Publication 72M, *Roadway Construction Standards*.

New and replacement installations of roadside safety devices not meeting the design and/or installation requirements in this Chapter or Publication 72M, *Roadway Construction Standards,* must be documented as per Chapter 12, Appendix E, *Roadside Barriers and End Treatments Checklist and Documentation for Non-Standard Condition*. For non-standard bridge barrier installations, Chapter 12, Appendix E does not apply. Instead, the Chief Bridge Engineer's approval is required at the Type, Size & Location (TS&L) stage as per Design Manual, Part 4, *Structures*, Section 13, Article 13.4.

Refer to Section 1.2.A for project definitions and geometric criteria. This section does not apply to repairs.

A. Guide Rail, Guide Rail End Treatments, and Terminals (excluding crash cushions on rigid barriers). Install and/or update as part of New Construction, Reconstruction, 3R and Pavement Preservation projects as noted below.

1. Interstates, including Interstate Ramps (Business Priority Network 1/BPN1).

a. New Construction, Reconstruction and Structural Pavement Overlays (with over 2 in pavement thickness placed regardless if profile changes, i.e., it includes mill and fill projects with no profile change).

Install and/or update guide rail, end treatments and terminals to be compliant with this Chapter and Publication 72M, *Roadway Construction Standards*.

b. Pavement Preservation Projects.

Install and/or update guide rail, end treatments and terminals to be compliant with this Chapter and Publication 72M, *Roadway Construction Standards* with exceptions to guide rail as noted in Section 12.3.A.5.

2. Non-Interstate NHS Roadways (Business Priority Network 2/BPN2).

a. New Construction and Reconstruction Projects.

Install and/or update guide rail, end treatments and terminals to be compliant with this Chapter and Publication 72M, *Roadway Construction Standards*.

b. 3R and Pavement Preservation Projects with an overlay (or other pavement treatment) over 1 in, regardless if profile changes, i.e., it includes mill and fill projects with no profile change.

Install and/or update guide rail, end treatments and terminals to be compliant with this Chapter and Publication 72M, *Roadway Construction Standards* with exceptions as noted in Sections 12.3.A.5 and 12.3.A.6.

3. Non-NHS Roadways with ADT ≥ 2000 (Business Priority Network 3/BPN3).

a. New Construction and Reconstruction Projects.

Install and/or update guide rail, end treatments and terminals to be compliant with this Chapter and Publication 72M, *Roadway Construction Standards*.

b. 3R and Pavement Preservation Projects with an overlay (or other pavement treatment) over 1 in regardless if profile changes, i.e., it includes mill and fill projects with no profile change.

Install and/or update guide rail, end treatments and terminals to be compliant with this Chapter and Publication 72M, *Roadway Construction Standards* with exceptions as noted in Sections 12.3.A.5 and 12.3.A.6.

Note: If any of these projects are performed by Department Forces, any required installations and/or upgrades may be delayed for up to 3 years if documented on a transition plan.

4. Non-NHS Roadways with ADT < 2000 (Business Priority Network 4/BPN4).

a. New Construction and Reconstruction Projects.

Install and/or update guide rail, end treatments and terminals to be compliant with this Chapter and Publication 72M, *Roadway Construction Standards*.

b. 3R and Pavement Preservation Projects.

Consider installing and/or upgrading guide rail, end treatments and terminals. Based on risk, it is encouraged to update these if severely deficient in height, damaged/deteriorated, or inappropriately used/placed. Upgrades performed as part of these projects can count towards the annual systematic upgrades in Section 12.3.A.4.c.

c. Annual Systematic Upgrades.

Starting in 2022, each District is to annually spend an amount equal to at least 0.8% of the District's annual State Highway (Capital) funding* on upgrades to guide rail, guide rail end treatments and terminals. Prioritize the upgrades and installations based on risk, considering speed and ADT, as follows:

(1) End treatments and terminals.

(a) Inappropriately used Terminal Section Singles and blunt ends
(b) Damaged end treatments
(c) End treatments not compliant with NCHRP 350 or MASH

(2) Guide Rail.

(a) Deficient height guide rail
(b) Deteriorated guide rail (e.g., guide rail with section loss, etc.)

The District must annually record the upgrades and installations and provide record for HDTD's review.

*State Highway (Capital) funding is only referenced for the purpose of determining the minimum amount to be expended each year. Any applicable funding type may be used for the upgrades.

5. Exceptions for Upgrading Guide Rail to Publication 72M, *Roadway Construction Standards*. (Only permitted when specified in above Sections 12.3.A.1 to 12.3.A.4).

Existing Strong Post Guide Rail may remain in place if it meets all of the following conditions:

a. It is in good condition.
b. The proposed height is not less than 26.5 in.
c. It does not have steel offset brackets.
d. It is otherwise compliant with NCHRP 350 or MASH.

6. Exceptions and Requirements for Upgrading for End Treatments, Terminals, and Impact Attenuators, Excluding Crash Cushions on Rigid Barriers. (Only permitted when specified in above Sections 12.3.A.1 to 12.3.A.4).

a. If the guide rail will be updated, then the end treatments and terminals must also be updated to be compliant with this Chapter and Publication 72M, *Roadway Construction Standards*.

b. If guide rail will not be updated, existing

(1) Crashworthy guide rail end treatments may remain in place if they are in working condition and are either NCHRP Report 350 or MASH compliant.

(2) Non-crashworthy end treatments and terminals should be evaluated to determine if they should be updated.

c. If it is determined that an end treatment or terminal needs replaced for any reason, then it must be replaced with a device compliant with this Chapter and Publication 72M, *Roadway Construction Standards*.

d. Inappropriately used/placed Terminal Section, Singles (TSS) must be updated according to this Chapter and Publication 72M, *Roadway Construction Standards*. However, the existing TSS may remain at driveways, access points and intersections (as per Section 12.4.K.3) if: (1) the guide rail is not being updated; and (2) the guide rail is fully curved/turned out from the roadway as shown in Publication 72M, *Roadway Construction Standards*.

Inappropriate use is a TSS located where an end treatment should be used, instead of a TSS. Inappropriate placement is a TSS which was not placed in accordance with the details in Publication 72M, *Roadway Construction Standards* where it would be reasonable to do so.

B. Concrete Barriers (excluding bridge barriers) and Associated Crash Cushions.

1. New Construction and Reconstruction Projects.

a. Median Barriers. Install and/or update concrete median barriers and their associated crash cushions to the standards in this Chapter and to Publication 72M, *Roadway Construction Standards*.

b. Non-Median Barriers (i.e., concrete barriers which do not separate vehicular and/or pedestrian traffic). Consider installing/updating non-median concrete barriers and their crash cushions to the standards in this Chapter and to Publication 72M, *Roadway Construction Standards*.

2. 3R and Pavement Preservation Projects.

a. Median Barriers. Existing concrete median barriers may remain if they are in good condition and are 29 in or higher. For F-shaped concrete median barriers, an overlay may reduce the barrier height up to the break point between the barrier's vertical face and slope. At the initial barrier installation, this break is

generally 3 in from the road surface. In no case shall an overlay go above the break point or reduce the height to less than 29 in.

b. Non-Median Barriers (concrete barriers which do not separate vehicular and/or pedestrian traffic). Consider installing and/or updating non-median concrete roadway barriers and their associated crash cushions to the standards in this Chapter and to Publication 72M, *Roadway Construction Standards*.

If a barrier or crash cushion needs replaced for any reason, then the proposed barrier and/or crash cushions must be compliant with this Chapter and Publication 72M, *Roadway Construction Standards*.

C. High-Tension Cable Barrier. For New Construction, Reconstruction, 3R and Pavement Preservation projects, existing high-tension cable barrier systems may remain in place if they are in good condition and are either NCHRP Report 350 or MASH compliant. New high-tension cable barrier installations must meet the requirements in Section 12.6.D.

D. Bridge Barriers (includes median and outside barriers adjacent to vehicular traffic). For new or replacement bridges and bridge superstructure replacements, provide bridge barriers in accordance with Publication 218M, *Standards for Bridge Design*, and Publication 219M, *Standards for Bridge Construction*.

For bridge rehabilitation projects, refer to Publication 15M, Design Manual, Part 4, *Structures*, Chapter 5, Article 5.5.2.6(f) for bridge barrier upgrade requirements and considerations.

For all project types and roadway classifications where an overlay is placed on a bridge, the final height of the concrete and/or metal bridge barriers (excluding guide rail spanning a structure) must be greater than or equal to 29 in from the gutter line. If a barrier height would be less than 29 in after placement of an overlay, then modifications to the bridge barrier and/or the overlay/milling thickness are needed to achieve the required height. This requirement may be waived by the District ADE for Design in the case of bridges classified as historic (i.e., listed in, or eligible for listing in, the National Register of Historic Places) or contributing to a historic district.

E. Guide Rail to Bridge Barrier Transitions. Install and/or update as follows:

1. For All Project Types with New or Replaced Bridge Barriers. When a bridge barrier is added or replaced as part of a project, the guide rail to bridge barrier transition must be compliant with this Chapter and Publication 72M, *Roadway Construction Standards*.

2. For New Construction, Reconstruction, 3R and Pavement Preservation Projects with Existing Bridge Barriers to Remain. When the approach guide rail is being updated (refer to Section 12.3.A), evaluate and when reasonable update and/or install the bridge to guide rail transition to Publication 72M, *Roadway Construction Standards*. Otherwise, the existing transition may remain in place if the following are true:

a. It is in good condition (not damaged, no excessive rust, bridge inspection rating of at least 6 or in cases of substandard approaches due to driveways and access points, a rating of 4, etc.).

b. It provides a gradual stiffness and height transition between the bridge and the approach guide rail (except for trailing ends on divided highways).

c. It is firmly attached to the bridge barrier.

d. It eliminates the potential snag point at the end of the bridge.

Engineering judgement may be used accordingly when assessing the condition of existing bridge barrier transitions. Consult with the Highway Design and Technology Division or the Bureau of Bridge (BOB) as needed.

If the existing bridge barrier transition does not meet the conditions above, update and/or install to Publication 72M, *Roadway Construction Standards*, as much as feasible and refer to Section 12.3.E.4 below for retrofit transitions.

3. Bridge Projects (with minimal approach work) with Existing Bridge Barriers to Remain. For bridge projects, such as Bridge Preservation projects, where the bridge barriers are not being updated as part of the project, evaluate and consider updating the existing guide rail to bridge barrier transitions to the *Roadway Construction Standards*, Publication 72M, as much as feasible and refer to Section 12.3.E.4 below for retrofit transitions.

Factors that play into this evaluation and consideration are the same factors as in Section 12.3.E.2 above, i.e., overall condition, stiffness and height transition, attachment to the bridge barrier and potential for snagging. Significant height deficiency should also be part of the evaluation and consideration, especially if the guide rail to bridge transition height is being reduced as part of the project.

Refer to Section 12.3.D for when an existing bridge barrier may remain when an overlay is placed on the bridge.

4. Retrofit Transitions to Existing Bridge Barriers. For some types of older bridge barriers which are to remain on a project but need an updated bridge to guide rail transition, retrofit drawings are available at the PennDOT CADD Resources website. These retrofit drawings have not been evaluated for MASH compliance. A Non-Standard Document, as per Chapter 12, Appendix E, is not required if using these retrofit drawings.

If no retrofit CADD drawings are available from HDTD or BOB, engineering judgement must be used to develop project specific details as close to guide rail to bridge barrier transitions shown in Publication 72M, *Roadway Construction Standards*. Regardless, the new retrofit transition must:

a. Provide a gradual stiffness transition between the bridge and the approach guide rail (except for trailing ends on divided highways).

b. Provide a firm attachment to the bridge barrier.

c. Eliminate the potential snag point at the end of the bridge.

d. Provide the thrie-beam/w-beam height as shown in Publication 72M, *Roadway Construction Standards*, Drawing RC-50M, as much as feasible. Any needed height transitions should preferably be placed after/beyond the bridge to guide rail transition.

F. Remove and Reset Conditions. If the in-situ barrier components are in good condition, the existing Strong Post Guide Rail may be removed and reset. For example, an existing Strong Post Guide Rail system could be removed and reset to the current specifications (including height, splice location, etc.) for the Type 31 Strong Post Guide Rail system. Any system which is reset must be compliant with this Chapter and to Publication 72M, *Roadway Construction Standards*.

G. Delineation. For existing guide rail, end treatments, concrete barrier, bridge barrier and high-tension cable barrier to remain within the project work limits, evaluate and consider updating delineation to current delineation standards in Publication 111, *Traffic Control - Pavement Markings and Signing Standards*, TC-8604. All new installations and upgrades must include required delineation.

INTENTIONALLY BLANK

12.4 ROADSIDE BARRIERS

A roadside barrier is a longitudinal barrier used to shield vehicles from natural or constructed obstructions located along either side of a traveled way for unidirectional traffic. It may occasionally be used to protect bystanders, pedestrians and cyclists from vehicular traffic under special conditions.

A. Performance Requirements. The primary purpose of all roadside barriers is to reduce the probability of an errant vehicle leaving the traveled way and striking a fixed object or terrain feature that is less forgiving than striking the barrier itself. Containing and redirecting the impacting vehicle using a barrier accomplishes this purpose. Because the dynamics of a crash are complex, the most effective means of assessing barrier performance is through full-scale crash tests.

A series of standard crash tests are presented in the AASHTO *Manual for Assessing Safety Hardware* (MASH) and NCHRP Report 350. Six Test Levels (TL-1 through TL-6) for longitudinal barriers have been established to evaluate occupant risk, structural integrity of the barrier, and post-impact behavior of the vehicle for a variety of vehicle masses at varying speeds and angles of impact. The AASHTO Roadside Design Guide presents the MASH and NCHRP Report 350 crash test matrices for longitudinal barriers.

Test Level 3 (TL-3) is the basic level required by the Federal Highway Administration (FHWA) for roadside barriers for use on the NHS. TL-3 barriers have been developed primarily for passenger cars and pickup trucks with speeds of 62 mph.

Test Level 2 (TL-2) barriers have been developed primarily for passenger cars and pickup trucks with speeds ≤ 44 mph. TL-2 barriers offer reduced protection as compared to higher test levels.

In special conditions where containment of single-unit trucks, tractor trailers and tank trailers is necessary, the criteria for Test Levels 4, 5 and 6 (TL-4, TL-5, and TL-6) are used respectively.

Table 12.3 provides a summary of differences by Test Level between MASH and NCHRP Report 350 with respect to the vehicle type, weight, speed, and impact angle of test vehicles.

B. Standard Roadside Barriers. Roadside barriers are usually categorized as flexible, semi-rigid or rigid, depending on their deflection characteristics on impact. Flexible systems are generally more forgiving than the other categories since much of the impact energy is dissipated by the deflection of the barrier and lower impact forces are imposed upon the vehicle.

Roadside barrier systems that have been accepted for use in Pennsylvania are:

1. FLEXIBLE SYSTEMS: W-Beam (Weak Post) Guide Rail, High-Tension Cable Barrier
2. SEMI-RIGID SYSTEMS: W-Beam (Strong-Steel Post) Guide Rail with Wood, Plastic, or Composite Offset Bracket
3. RIGID SYSTEMS: Concrete Barrier

C. Roadside Barrier Guidelines. These roadside barrier guidelines are an indicator to **consider** utilizing roadside barrier. Satisfaction of these guidelines is not a guarantee that a roadside barrier is needed. As such, these guidelines should be considered in the determination of the need for a roadside barrier rather than absolute criteria. Since these guidelines are based on average or normal conditions, they are not conclusive justification for the installation of a roadside barrier at any particular location, and they are not a substitute for engineering judgment. The unique circumstances of each location and a determination of cost-effectiveness will dictate if and when to install a roadside barrier. These roadside barrier guidelines are based on the premise that a roadside barrier should be installed only if it reduces the severity of potential crashes.

TABLE 12.3
CRASH TESTING PARAMETERS
FOR LONGITUDINAL BARRIERS

TEST LEVEL	CRASH TEST	VEHICLE TYPE	WEIGHT (lb)	SPEED (mph)	IMPACT ANGLE (degrees)
LONGITUDINAL BARRIERS					
TL-2	MASH	1100C (Passenger Car)	2,420	44	25
		2270P (Light Truck)	5,000	44	25
	NCHRP 350	820C (Passenger Car)	1,800	44	20
		2000P (Light Truck)	4,400	44	25
TL-3	MASH	1100C (Passenger Car)	2,420	62	25
		2270P (Light Truck)	5,000	62	25
	NCHRP 350	820C (Passenger Car)	1,800	62	20
		2000P (Light Truck)	4,400	62	25
TL-4	MASH	1100C (Passenger Car)	2,420	62	25
		2270P (Light Truck)	5,000	62	25
		10000S (Single-Unit Truck)	22,000	56	15
	NCHRP 350	820C (Passenger Car)	1,800	62	20
		2000P (Light Truck)	4,400	62	25
		8000S (Single-Unit Van Truck)	17,650	50	15
TL-5	MASH	1100C (Passenger Car)	2,420	62	25
		2270P (Light Truck)	5,000	62	25
		36000V (Tractor-Van Trailer)	79,300	50	15
	NCHRP 350	820C (Passenger Car)	1,800	62	20
		2000P (Light Truck)	4,400	62	25
		36000V (Tractor-Van Trailer)	79,300	50	15
TL-6	MASH	1100C (Passenger Car)	2,420	62	25
		2270P (Light Truck)	5,000	62	25
		36000T (Tractor-Tank Trailer)	79,300	50	15
	NCHRP 350	820C (Passenger Car)	1,800	62	20
		2000P (Light Truck)	4,400	62	25
		36000T (Tractor-Tank Trailer)	79,300	50	15

Typically, roadside barrier guidelines have been based on an analysis of certain roadside elements or conditions. There are instances where it is not immediately obvious whether the roadside barrier or the unshielded condition presents the greater undesirable situation. In such instances, roadside barrier guidelines may be established by using a benefit/cost analysis whereby factors such as design speed and traffic volumes can be evaluated in relation to roadside barrier need. Costs associated with the barrier (installation costs, maintenance costs and crash costs) are compared to similar costs associated with the unshielded condition. This procedure is typically used to evaluate three options: (1) remove or reduce the condition so that it no longer requires shielding, (2) install an appropriate barrier, or (3) leave the condition unshielded. The one-time cost to flatten foreslopes and eliminate guide rail may be cost-effective when compared against the life-cycle cost of installation and maintenance of guide rail.

Eliminate short lengths of guide rail since these sections are often more undesirable than no section at all. Where guide rail cannot be eliminated, specify a minimum of 50 ft plus proper end treatment.

If guide rail is not needed due to the height of the slope, keep the slope clear of fixed objects.

Avoid short gaps between guide rail installations. If the points of need are within 200 ft or less, provide continuous roadside barrier between them if there is no apparent need for the opening.

Extending guide rail to be anchored with a buried-in-backslope terminal (see Section 12.9.E.1) is cost-effective and provides superior safety performance.

Consider guide rail in sensitive areas such as school playgrounds or reservoirs even when they are outside the clear zone.

D. Design and Selection Procedures. GUIDE RAIL SHOULD ONLY BE USED WHERE THE RESULT OF STRIKING THE OBJECT OR LEAVING THE ROADWAY WOULD BE MORE SEVERE THAN THE CONSEQUENCE OF STRIKING THE GUIDE RAIL. Where guide rail is needed, the roadway should be examined to determine the feasibility of adjusting site features so that the guide rail can be eliminated (e.g., flattening an embankment slope, removing a fixed object or eliminating a drainage head wall). The initial cost to eliminate the guide rail may appear excessive; however, a guide rail installation including impact attenuating devices requires maintenance for many years and this fact should not be overlooked.

Consult Publication 72M, *Roadway Construction Standards*, for the details of all barrier systems (RC-50M Series). Table 12.4 shows the "minimum unobstructed distance" to be provided behind the various types of guide rail and median barrier systems. The values of the "minimum unobstructed distance" are measured from the rear face of the guide rail post to the front face of the obstruction, as specified in Table 12.4. These values of the "minimum unobstructed distance" are based on the anticipated barrier deflection that resulted from MASH TL-3 crash tests on guide rail with the requirements described in Section 12.4.A and Table 12.3. Although embankments, along with dropoffs (e.g., along a culvert under fill) may require protection as discussed in Section 12.4.G, Embankment Protection, the embankment or dropoff itself is not considered an obstruction when determining the unobstructed distance.

This Chapter and Publication 72M, *Roadway Construction Standards*, define deflection distance as the distance behind the post to the face of the obstruction (i.e., "minimum unobstructed distance"). The minimum unobstructed distance is equal to the deflection distance. The testing reports from MASH will refer to "working width" to describe the deflection. MASH defines "working width" as the distance between the traffic face of the test article before the impact and the maximum lateral position of any major part of the system or vehicle after the impact.

Table 12.5 gives the maximum post spacing for weak post guide rail on curves such as ramps. Do not use weak post guide rail around radii at intersections where it can be hit at severe impact angles. Weak post guide rail may not be as effective on the inside of sharp horizontal curves.

To determine the need for guide rail, refer to Section 12.5, Roadside Barrier Placement, and the preceding sections of this Chapter. Additional selection guidelines and criteria for guide rail standard conditions and other guide rail conditions are presented below in Sections 12.4.E and 12.4.F.

TABLE 12.4
GUIDE RAIL AND MEDIAN BARRIER SYSTEMS

TYPE DESIGNATION	DESCRIPTION	MOUNTING HEIGHT	MINIMUM UNOBSTRUCTED DISTANCE	POST SPACING
2-W	WEAK POST W-BEAM GUIDE RAIL (NORMAL POST SPACING)	32" TO TOP OF BEAM	9' - 0"	12' - 6"
2-WC	WEAK POST W-BEAM GUIDE RAIL (CLOSE POST SPACING)	32" TO TOP OF BEAM	6' - 6"	6' - 3"
2-WCC	WEAK POST W-BEAM GUIDE RAIL (VERY CLOSE POST SPACING)	32" TO TOP OF BEAM	5' - 6"	3' - 1 1/2"
31-S	TYPE 31 STRONG POST W-BEAM GUIDE RAIL (NORMAL POST SPACING)	31" TO TOP OF BEAM	4' - 0"	6' - 3"
31-SC	TYPE 31 STRONG POST W-BEAM GUIDE RAIL (CLOSE POST SPACING)	31" TO TOP OF BEAM	3' - 0"	3' - 1 1/2"
31-SCC	TYPE 31 STRONG POST W-BEAM GUIDE RAIL (VERY CLOSE POST SPACING)	31" TO TOP OF BEAM	1' - 6"	1' - 6 3/4"
31-SCC (NESTED)	TYPE 31 STRONG POST W-BEAM GUIDE RAIL (VERY CLOSE POST SPACING, NESTED)	31" TO TOP OF BEAM	1' - 0"	1' - 6 3/4"
31-SM	TYPE 31 STRONG POST W-BEAM GUIDE RAIL (MEDIAN BARRIER / DOUBLE-SIDED)	31" TO TOP OF BEAM	2' - 6"*	6' - 3"
—	CONCRETE MEDIAN BARRIER, F-SHAPE	32", 42" OR 50" TO TOP OF BARRIER	0' - 0"	—
—	CONCRETE MEDIAN BARRIER, SINGLE SLOPE	42" TO TOP OF BARRIER	0' - 0"	—
31-S (25' - 0" LONG SPAN)	TYPE 31 STRONG POST W-BEAM GUIDE RAIL LONG SPAN SYSTEM ACROSS CULVERTS AND SMALL STRUCTURES (THREE OMITTED STEEL POSTS, SIX LONG BREAKAWAY TIMBER POSTS---SEE RC-51M)	31" TO TOP OF BEAM	6' - 6"	—
31-S (18' - 9" LONG SPAN)	TYPE 31 STRONG POST W-BEAM GUIDE RAIL LONG SPAN SYSTEM ACROSS CULVERTS AND SMALL STRUCTURES (TWO OMITTED STEEL POSTS, SIX LONG BREAKAWAY TIMBER POSTS---SEE RC-51M)	31" TO TOP OF BEAM	6' - 0"	—
31-S (12' - 6" LONG SPAN)	TYPE 31 STRONG POST W-BEAM GUIDE RAIL LONG SPAN SYSTEM ACROSS CULVERTS AND SMALL STRUCTURES (ONE OMITTED STEEL POST--- SEE RC-51M)	31" TO TOP OF BEAM	5' - 6"	—
31-S (STEEL POSTS IN ROCK)	TYPE 31 STRONG POST W-BEAM GUIDE RAIL STEEL POSTS IN ROCK (SEE RC-51M)	31" TO TOP OF BEAM	5' - 6"	6' - 3"

*Measured from back of W-beam to obstruction.

TABLE 12.5
WEAK POST W-BEAM GUIDE RAIL SYSTEMS ON CURVES

TYPE DESIGNATION	CURVE DESCRIPTION	POST SPACING
2-W	R > 220' - 0"	12' - 6"
2-WC	R = 110' - 0" TO 220' - 0"	6' - 3"
2-WCC	R < 110' - 0"	3' - 1 1/2"

E. Guide Rail Standard Conditions.

1. Generally, the guide rail system which provides the largest dynamic deflection should be used if the adequate unobstructed distance is available and the unobstructed distance can be maintained.

2. Weak post guide rail (2-W, 2-WC, and 2-WCC) should be considered where guide rail is needed, if the minimum unobstructed distance behind the guide rail is available. Weak post systems shall not be used where the fill slope is steeper than 1V:2H for standard conditions and post lengths.

3. Strong post guide rail (31-S, 31-SC, and 31-SCC) should be used when the minimum unobstructed distance behind the guide rail is not adequate to permit the use of a weak post system.

4. For proposed installations of Type 31-S Guide Rail with posts in rock, use the standard pay item for Type 31-S Guide Rail with posts in rock in the PS&E package. Define the station to station limits where Type 31-S Guide Rail with posts in rock is to be installed.

5. For optimum performance, strong post and weak post systems are to provide minimum distance of 2 ft, 0 in from the rear face of the guide rail post to the fill slope break (see Figure 12.3).

6. Types 31-S and 31-SC guide rail should be used at approaches to structures (see Standard Drawings). Where this requires a transition from a weak post system, the transition shown on the Standard Drawings shall be used.

7. Mixing of strong post and weak post systems in the same run of guide rail shall be used only when the proper transition treatment between systems can be provided, as shown on the Standard Drawings. Frequent transitions between strong post and weak post systems should be avoided.

8. Strong post guide rail and weak post guide rail in this Chapter and Publication 72M, *Roadway Construction Standards*, is MASH 2016 and TL-3 compliant. Refer to Section 12.4.A and Table 12.3 for more information about Test Levels.

F. Other Guide Rail Conditions. The following criteria may be used where special conditions exist:

1. Side road intersections close to the ends of structures should be avoided. However, if this condition exists and cannot be avoided, refer to guidance in the AASHTO Roadside Design Guide, Section 5.6.6.

2. When the minimum unobstructed distance is not available, consideration should be given to using concrete barrier as indicated in Section 12.8.

3. When a strong post guide rail system is installed, a minimum distance of 2 ft should be maintained from the rear face of the guide rail post to the fill slope break point. However, if a distance of 2 ft cannot be maintained because of topography or other constraints, a distance of 1 ft is acceptable with a post length of 6 ft for the strong post.

If a minimum distance of 1 ft cannot be obtained, a 7 ft long post (or longer, if needed) can be installed up to the slope break point.

If neither of the above options are available, an 8 ft long strong post can be installed on the slope, with the front face of the strong post located no more than 1 ft from the slope break point. This installation must be used as a last resort and is applicable only if the slope is not steeper than 1V:2H as shown in Figure 12.4. This strong post guide rail installation detail is MASH 2016 and TL-3 compliant. This other installation, as shown in Figure 12.4, should not be used directly in combination with omitted posts and must be documented in the project files.

The placement of strong post guide rail posts in a 1V:2H, roadside fill slope greatly reduces the soil resistance associated with lateral deflection of the strong post guide rail. Soil conditions must be good for the roadside fill slope. Also, future erosion control is a major consideration, so minimize potential soil erosion as much as reasonable. There may be instances where posts longer than 8 ft are applicable (e.g., steeper slope, soil conditions, etc.).

The locations, number, and length of extra-length posts (i.e., longer than 6 ft) should be shown in the PS&E package.

Chapter 2 of the AASHTO Roadside Design Guide presents an analysis procedure called the Roadside Safety Analysis Program (RSAP), a cost-effectiveness selection procedure that can be used to compare several alternative safety treatments and to provide guidance to the designer for selecting an appropriate design.

INTENTIONALLY BLANK

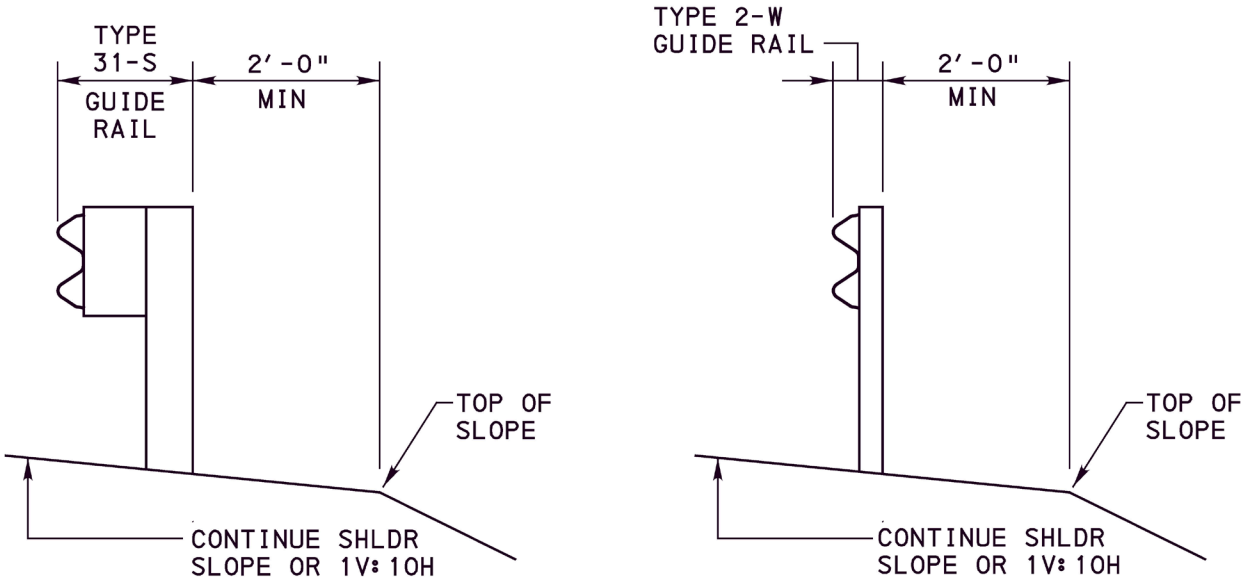

FIGURE 12.3
PLACEMENT OF W-BEAM GUIDE RAIL
ON SLOPES FOR OPTIMUM PERFORMANCE

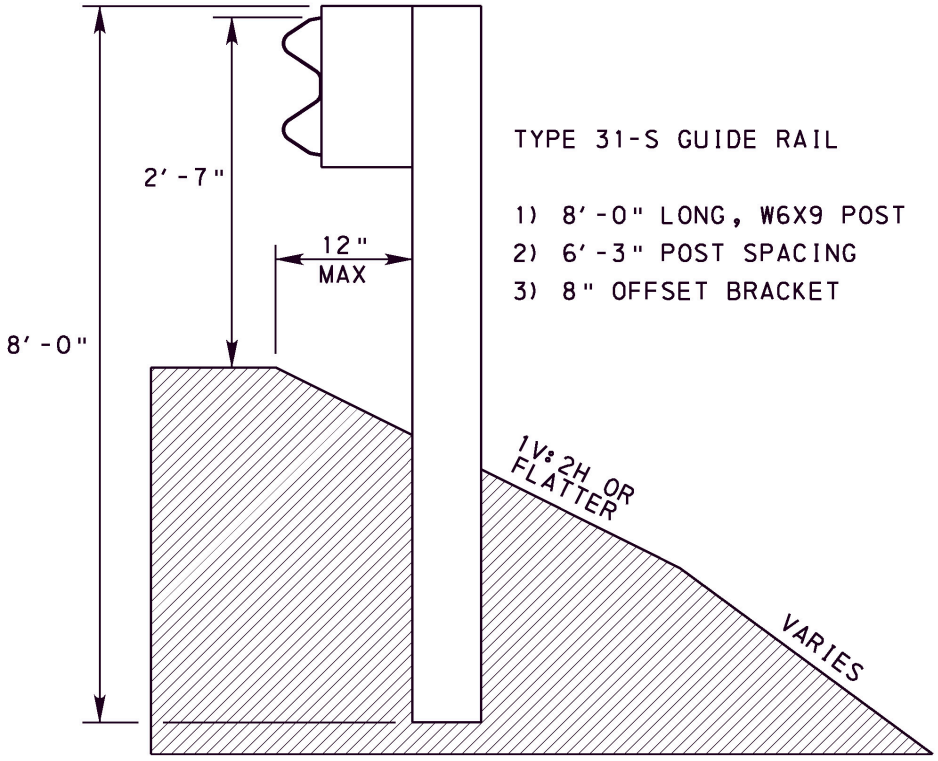

FIGURE 12.4
EXAMPLE OF OTHER INSTALLATION
FOR STRONG POST GUIDE RAIL
ON 1V:2H OR FLATTER FILL SLOPE

G. Embankment Protection. Embankment height and side slope are the basic factors to consider in determining barrier requirements as shown in Table 12.6. These criteria are based on studies of the relative severity of encroachments on embankments versus impacts with roadside barriers. Embankments with slopes of 1V:3H or flatter do not require shielding unless they contain obstructions within the clear zone. Table 12.6 takes into account the decreased probability of encroachments on lower volume roads and the relative cost of installing a traffic barrier versus leaving the slope unshielded. This is based on site-specific conditions in Pennsylvania and associated crash costs with a safety factor applied to account for increased traffic volumes approaching the design year.

TABLE 12.6
BARRIER REQUIREMENTS FOR EMBANKMENT HEIGHTS

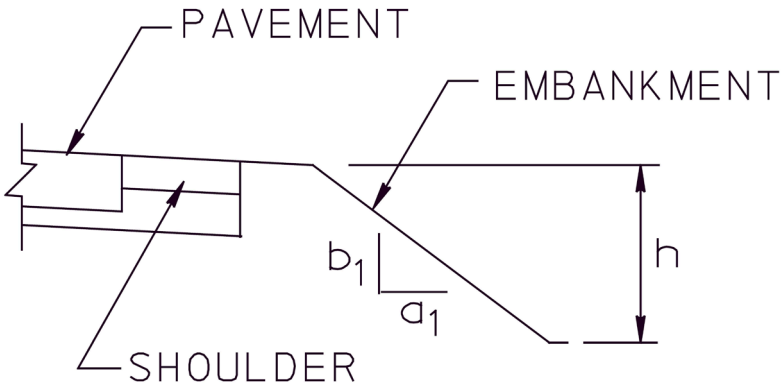

EMBANKMENT SLOPE ($S = b_1 : a_1$)	EMBANKMENT HEIGHT (h)			
	AVERAGE DAILY TRAFFIC (ADT)			
	> 5000	751 - 5000	401 - 750	≤ 400
1V:1.5H OR STEEPER	4.0 ft	6.0 ft	9.0 ft	17.0 ft
1V:2H	8.0 ft	10.0 ft	16.0 ft	31.0 ft
1V:2.5H	12.0 ft	16.0 ft	25.0 ft	49.0 ft
1V:3H OR FLATTER	GUIDE RAIL NOT REQUIRED			

Rounding at the shoulder and at the toe of an embankment can reduce the severity of run-off-the-road crashes. A rounded slope should reduce the chances of an errant vehicle becoming airborne, and should afford the driver more control over the vehicle. In view of the safety benefits, rounding should be considered in the design process. Refer to the Typical Roadway Cross Sections in Chapter 1 for shoulder rounding details and to the AASHTO Roadside Design Guide for rounding at the toe of an embankment slope.

H. Protection from Roadside Obstructions. Although a traversable and unobstructed roadside is highly desirable from a safety standpoint, some appurtenances simply must be placed near the pavement. Fixed objects which frequently occupy highway right-of-way include highway signs, roadway lighting, traffic signals, railroad warning devices, motorist-aid call boxes, mailboxes and utility poles.

The AASHTO Roadside Design Guide, Chapter 11 contains information on mailbox supports and their location on the roadside. These guidelines are compatible with the requirements of the US Postal Service and are presented in the interest of providing the highest degree of safety practicable for the motoring public, mail carriers and postal patrons. Mailboxes are predominant in rural and suburban roads and streets and need to be considered as part of roadside safety management. These guidelines may be useful when necessary to explain installation and control procedures to the general public.

The designer should provide the safest facility practical, within given constraints. Generally, there are six options from which to choose a safe design. In order of preference, these are:

1. Remove the obstruction.

2. Redesign the obstruction so it can be traversed safely.

3. Relocate the obstruction to a point where it is less likely to be struck.

4. Reduce impact severity by using an appropriate breakaway device or impact attenuator.

5. Shield the obstruction with a longitudinal traffic barrier if it cannot be eliminated, relocated or redesigned.

6. Delineate the obstruction if the above alternatives are not appropriate.

While options 1 and 2 are the preferred choices, these solutions are not always practical, especially for highway signing and lighting which must remain near the roadway to serve their intended functions.

Every effort should be made to lessen the number of roadside obstructions along the highway. Special effort should be given to keeping gore areas and other high-exposure areas free from obstructions that would require guide rail.

Usually, posts of breakaway design should be used for sign supports regardless of their distance from the pavement except when the post is located behind guide rail installed for other reasons or located a sufficient distance up a backslope where it is unlikely to be hit by an errant vehicle. Table 12.7 provides the requirements for barrier placement for fixed objects within the clear zone.

If the required clear zone adjacent to the pavement cannot be cleared of roadside obstructions due to practical or economic reasons, adequate guide rail should be provided, as determined from Table 12.7 except as justified elsewhere in this Chapter. The amount that the guide rail deflects upon impact is the critical factor to consider when installing guide rail in front of obstructions. The minimum unobstructed distance should be sufficient to avoid vehicle contact with the fixed object during impact and should not be less than the values presented in Table 12.4.

At the trailing end of guide rail, a distance of 50 ft beyond the end treatment is to be kept clear of all roadside obstructions. This "downstream clear zone" is intended to minimize the likelihood that a vehicle may be directed into an obstruction by the barrier.

TABLE 12.7
GUIDE RAIL REQUIREMENTS
FOR FIXED OBJECTS
WITHIN THE CLEAR ZONE

FIXED OBJECTS WITHIN THE CLEAR ZONE	BARRIER REQUIRED	
	YES	NO
1. SIGN SUPPORT (GROUND MOUNTED):		
(A) POST OF BREAKAWAY DESIGN		X
(B) NON-BREAKAWAY DESIGN SIGN SUPPORTS	X	
(C) CONCRETE BASE EXTENDING 4 in OR MORE ABOVE GROUND	X	
2. LIGHTING POLES AND SUPPORTS OF BREAKAWAY DESIGN		X
3. BRIDGE PIERS AND ABUTMENTS AT UNDERPASSES	X	
4. CULVERT HEADWALLS 4 in OR MORE ABOVE GROUND	X	
5. TREES *		X
6. UTILITY POLES *		X
7. LIGHTING POLES WITH HIGH MAST LIGHTING	X	
8. RETAINING WALLS **		X
9. BUILDINGS *		X

* The designer shall exercise sound engineering judgment and consider shielding in some special cases where such obstructions are likely to be hit due to geometric roadway conditions (e.g., outside of a curve, steep grade at beginning of a curve, etc.). Shielding should also be considered in sensitive areas, such as school playgrounds or reservoirs.

** A judgment decision based on relative smoothness of wall and anticipated maximum angle of impact (refer to AASHTO Roadside Design Guide, Table 5-2).

I. Non-Traversable Roadside Obstructions. Non-traversable roadside obstructions require special consideration to provide safety and to afford protection if encountered by vehicles and pedestrians within the clear zone or adjacent to the highway right-of-way. These obstructions include: (1) permanent bodies of water; (2) mined areas including coal strip mining, stone quarries and other open pit mining operations; and (3) storage locations of hazardous substances.

Because of the size of some of these features along the roadway, the probability of an errant vehicle encountering such a condition is greater than that of a vehicle encountering a fixed object. Therefore, any non-traversable obstruction that requires shielding should be removed, if practical. Otherwise, a longitudinal barrier system, such as guide rail, should be considered. A barrier system shall be provided for permanent bodies of water, with depths greater than 2 ft, that are located within the clear zone or adjacent to the right-of-way. For mined areas, earthen barrier and safety barricades for protection of both vehicles and pedestrians should be provided.

J. Utility Poles and Trees. For New Construction or Reconstruction projects, every effort should be made to install or relocate utility poles as far from the traveled way as practical.

For existing utility pole installations, a concentration of crashes at a site or a certain type of crash that seems to occur frequently in a given jurisdiction may indicate that the highway/utility system is contributing to the crash potential. Utility pole crashes are subject to the same patterns as other types of roadway crashes; thus, they are subject to traditional highway crash study procedures.

Generally, guide rail should not be used to shield a line of utility poles or trees. However, where guide rail is used in front of utility poles and trees due to other roadside obstacles, the minimum unobstructed distance behind the guide rail post shall be as presented in Table 12.4. Consider extending guide rail to shield secondary objects (e.g., tree or utility pole) within approximately 50 ft of the end of the guide rail.

The removal of individual trees should be considered when they are determined both to be an obstruction and to be in a location where they are likely to be hit. Such trees can often be identified by past crash history at similar sites, by scars indicating previous crashes, or by field reviews. Because tree removal can be expensive and often has adverse environmental impacts, this countermeasure should be used only when it is an effective solution.

Roadways through wooded areas with heavy nighttime traffic volumes, frequent fog and narrow lanes should be well delineated. Pavement markings and post mounted delineators are among the most effective and least costly improvements that can be made to a roadway. For guide rail delineation, see TC-8604, Publication 111, *Traffic Control - Pavement Markings and Signing Standards*.

K. Guide Rail End Treatments and Terminals. The terminal end of the guide rail should be designed and located so that there are no exposed rail element ends that could impale a vehicle. The preferred treatment is to bury the end of the guide rail into a backslope, retaining its full height even if the guide rail must be extended a short distance to accomplish this. Therefore, evaluate opportunities for nearby locations to bury the end of the guide rail into a backslope.

To be crashworthy, an end treatment must not spear, vault, or roll a vehicle for head-on or angled impacts. A crashworthy end treatment is considered essential if the barrier terminates within the clear zone and/or is in an area where it is likely to be hit by an errant vehicle with the exception of the "turndown" or Terminal Section, Single as permitted in Sections 12.4.K.2 and 12.4.K.3.

On two-lane highways with two-way traffic, both the adjacent traffic and opposing traffic could impact the guide rail ends. Therefore, if either of the ends are within the clear zone and/or likely to be hit by an errant vehicle, a crashworthy end treatment is needed, with the exception of the "turndown" or Terminal Section, Single as permitted in Sections 12.4.K.2 and 12.4.K.3. Regardless, if crashworthy end treatments are needed, both guide rail ends still require approved end treatments in order to anchor the system.

On divided highways, crashworthy end treatments are not needed on the trailing end of the guide rail if the end is outside the clear zone of opposing traffic and/or unlikely to be hit by an errant vehicle. Guide rail transitions are not needed on trailing ends of bridge barriers unless warranted by the length of need or other obstructions.

The designer must exercise sound engineering judgment and ensure that the most appropriate available guide rail terminals are specified and provisions incorporated so they can be properly installed based on the type of facility. Crashworthy end treatments should be considered in sensitive locations, in areas with tight geometrics, areas with an unusually high crash history, etc.

Non-crashworthy terminals include:

1. Type 31 Strong Post Anchor Terminal (see detail in RC-51M).

a. Can be used at the trailing end of Type 31 Strong Post Guide Rail on divided highways when located outside the clear zone of opposing traffic and/or is unlikely to be struck by an errant vehicle of opposing traffic.

b. Can be used at the trailing end of Type 31 Strong Post Guide Rail on one-way roadways if it is unlikely to be struck by intersecting traffic (such as intersections).

c. Plain Cement Concrete Curb or Plain Concrete Mountable Curb is not to be installed within the pay limit for a Type 31 Strong Post Anchor Terminal as shown on RC-51M.

2. "Turndowns" - Type 31 Strong Post End Treatments (see detail in RC-51M) and Type 2 Weak Post End Treatments (see detail in RC-53M).

a. NHS. Can be used only on the trailing end of guide rail on divided highways when opposing traffic will not be able to impact the trailing end of the guide rail system.

b. Non-NHS. Can be used for divided and non-divided highways as described below.

(1) Divided Highways. Can be used on the trailing end of guide rail on divided highways when opposing traffic will not be able to impact the trailing end of the guide rail system.

(2) Non-divided Highways. Can be used when all of the following apply.

(a) The posted speed limit is ≤ 45 mph.
(b) The current traffic volume is ≤ 2000 vehicles per day.
(c) The turndown is not in a high crash location.

c. Plain Cement Concrete Curb or Plain Concrete Mountable Curb is not to be installed within the pay limit for a Type 31 Strong Post End Treatment as shown on RC-51M.

3. Terminal Section, Single (TSS). A TSS is not considered a crashworthy end treatment. Typically, the TSS is used in combination with an in-line anchor as shown on RC-54M. A TSS, in combination with an in-line anchor, may be used with curved guide rail at driveways and at access points on non-NHS roadways. However, at these locations, a crashworthy end treatment (e.g., a permanent impact attenuating device) is typically preferred, especially at high crash locations and on roadways with a design and/or posted speed of 45 mph or greater. A crashworthy end treatment is typically preferred over a TSS even if the crashworthy end treatment has less length of need than the TSS, and/or if the crashworthy end treatment has other deficiencies which require a Non-Standard Condition Documentation (see Chapter 12, Appendix E).

As shown on RC-54M, a TSS on the end of a flared (4 ft offset) guide rail may be used for intersecting side roads at non-NHS intersections where all of the following apply:

(a) The side road federal functional classification is local or minor collector.
(b) The side road is stop-controlled (not signalized).
(c) The side road ADT is ≤ 2000 vehicles.
(d) A TSS cannot be used beyond the immediate intersection.

In all cases, a TSS with or without the in-line anchor is not allowed on NHS roadways. Refer to RC-54M for construction details.

The approach terrain to any end treatment should be graded to a 1V:10H slope or flatter. For gating terminals, the flat slope should extend behind the terminal as shown on the Standard Drawings and this Chapter.

If crashworthy end treatments are needed, weak post guide rail must be transitioned with a 50 ft strong post guide rail section to anchor the Type 2-W guide rail, prior to the attachment of a crashworthy end treatment. If the weak post guide rail can be hit from the opposite direction, then a transition to strong post guide rail is needed, as described in the previous sentence.

L. Powder Coated Guide Rail. Guide rail is typically galvanized and has a silver color. Powder coating or painting over galvanized guide rail is considered by FHWA as an acceptable aesthetic option. Powder coating applications typically use a spray gun, which applies an electrostatic charge to powder particles which are then attracted to the galvanized steel. Powder coated guide rail may be needed in special cases such as mitigation or for a context sensitive design. Some impact attenuators may be powder coated if recommended by the manufacturer, but it needs to be verified with the manufacturer. Also, powder coated guide rail will need to be monitored for durability of the coating. If a specific appearance is deemed appropriate to coordinate with existing facilities or some other aspect of the scenic location, the system will need to be specified with a special provision.

M. Type 31 Strong Post Guide Rail with Curb and No Omitted Posts. Situations may occur where it is necessary to install Type 31-S Guide Rail behind Plain Cement Concrete Curb or Plain Concrete Mountable Curb, Type A. Publication 72M, *Roadway Construction Standards*, RC-51M, shows the details to construct Type 31-S Guide Rail in conjunction with Plain Cement Concrete Curb or Plain Concrete Mountable Curb, Type A. The following applies to this detail:

- The Plain Cement Concrete Curb or Plain Concrete Mountable Curb is to have a maximum height of 6 in above the shoulder or finished grade.

- For the Type 31-S Guide Rail, the front face of the W-beam rail element may be horizontally offset: (1) between 0 in and 6 in behind the front face (gutter) of Plain Cement Concrete Curb or (2) between 1½ in and 6 in behind the front face (gutter) of Plain Concrete Mountable Curb, Type A. The offset dimension is to be shown in the Construction Plans in the PS&E package.

- This installation is MASH 2016 and TL-3 compliant, so long as the specified minimum unobstructed distance is available for Type 31-S Guide Rail (normal post spacing) as indicated in Table 12.4.

- Plain Cement Concrete Curb or Plain Concrete Mountable Curb is not to be installed within the pay limit for a Type 31 Strong Post Anchor Terminal or a Type 31 Strong Post In-Line Anchor as shown on RC-51M.

- Curb is not to be installed within pay limits of permanent impact attenuating devices, buried-in-backslope configurations, and other end treatments.

- Curb should not be present for 75-100 ft in front of permanent impact attenuating devices.

In locations where the height of the Plain Cement Concrete Curb is greater than 6 in, consider stiffening the guide rail by bolting a W-beam to the back of the posts, adding a rubrail, or using Type 31-SC Guide Rail.

An asphalt wedge curb, with a maximum height of 6 in, is also allowed to be built with Type 31-S Guide Rail. A project specific detail will be needed.

N. Type 31 Strong Post Guide Rail with Omitted Guide Rail Posts. When a Type 31 Strong Post Guide Rail system is proposed, a situation may occur where posts would be driven and would potentially damage an underground feature, such as a low-fill culvert or underground utility line. To avoid these underground features, it may be appropriate to omit a post or posts from the proposed guide rail system as shown on Publication 72M, *Roadway Construction Standards*, RC-51M.

Design options with omitted guide rail post include the following:

1. Type 31 Strong Post Guide Rail (Long Span Systems Across Culverts and Small Structures). RC-51M presents long span systems where posts are omitted across culverts and small structures. These long span systems are MASH 2016 and TL-3 compliant, so long as the specified minimum unobstructed distance is available as indicated in Table 12.4. RC-51M depicts three long span systems:

- One omitted post (i.e., 12 ft, 6 in long span)
- Two omitted posts (i.e., 18 ft, 9 in long span)
- Three omitted posts (i.e., 25 ft, 0 in long span)

For the 12 ft, 6 in long span, provide a minimum length of 50 ft of Type 31-S Guide Rail in each direction, as shown on RC-51M, from the first steel strong post (i.e., the steel strong post that is closest to the omitted post). In this instance, provide the minimum unobstructed distance specified in Table 12.4 behind the rear face of the guide rail post to the front face of the obstruction.

For the 18 ft, 9 in and the 25 ft, 0 in long spans, on either side of the omitted posts, three long breakaway timber posts with 12 in non-routed offset brackets are used at either end of the gap. The W-beam rail element does not have to be doubled up, or "nested" over the gap. Beyond the three long breakaway timber posts,

provide a minimum length of 62 ft, 6 in of Type 31-S Guide Rail in each direction, as shown on RC-51M for anchoring and to provide a stiffening transition.

For the 18 ft, 9 in and the 25 ft, 0 in long spans, interaction is to be minimized between the vehicle and the culvert headwall during impacts with the unsupported length of guide rail. As shown on RC-51M, a minimum lateral offset of 1 ft, 0 in is to be provided between the back of post and the culvert headwall, and the height of the culvert headwall is to extend no more than 2 in above the ground surface.

2. Type 31 Strong Post Guide Rail with Curb and One Omitted Post. RC-51M presents Type 31-S Guide Rail with one omitted post and in conjunction with Plain Cement Concrete Curb or Plain Concrete Mountable Curb, Type A. This installation is MASH 2016 and TL-3 compliant, so long as the specified minimum unobstructed distance for Type 31-S Guide Rail (normal post spacing) is available as indicated in Table 12.4. The following should be provided:

- The Plain Cement Concrete Curb or Plain Concrete Mountable Curb is to have a maximum height of 6 in above the shoulder or finished grade.
- For the Type 31-S Guide Rail, the front face of the W-beam rail element may be horizontally offset: (1) between 0 in and 6 in behind the front face (gutter) of Plain Cement Concrete Curb or (2) between 1½ in and 6 in behind the front face (gutter) of Plain Concrete Mountable Curb, Type A. The offset dimension is to be shown in the Construction Plans in the PS&E package.
- The 37 ft, 6 in length of nested W-beam guide rail around the omitted post location was incorporated to increase the rail strength and prevent premature rail rupture. The rails are nested such that the two upstream rails are placed in front of the two downstream rails. See Section 12.4.O for additional information about nested guide rail.
- A minimum length of 56 ft, 3 in is to be provided between omitted posts. This length is equivalent to saying a single post may be omitted at every ninth post along an installation of Type 31-S Guide Rail.
- Omitting two or more consecutive posts is not permitted within an installation of Type 31-S Guide Rail with Plain Cement Concrete Curb or Plain Concrete Mountable Curb, Type A.
- Omitted posts within an installation of Type 31-S Guide Rail with Plain Cement Concrete Curb or Plain Concrete Mountable Curb, Type A should not be used without standard soil backup as described in Section 12.4.E.5.

O. Nested Guide Rail. Semi-rigid systems such as guide rail can be strengthened locally by reinforcing the W-beam or thrie-beam rail element with a nested rail. A nested rail uses a double section of W-beam (or thrie beam), where one W-beam (or thrie beam) is nested inside the other. The nested rail aims to shield isolated fixed objects located near the rail. Nesting may provide stiffening and thus reduces deflections, if needed, and if no other reasonable options are available.

For guide rail to bridge barrier transitions, provide nested rail as shown on RC-50M.

Nested rail is also specified in RC-51M for Type 31 Strong Post Guide Rail with one omitted post and in conjunction with Plain Cement Concrete Curb or Plain Concrete Mountable Curb, Type A (see Section 12.4.N.2).

When nested guide rail is specified, use the standard pay item for the W-beam (or thrie beam) guide rail system and define the station to station limits where the nested rail is to be installed. Provide a minimum of 200 ft of Type 31 Strong Post Guide Rail between nested runs, except for the details as shown on RC-51M for guide rail with curb and one omitted post.

P. Type 31 Strong Post In-Line Anchor. The Type 31 Strong Post In-Line Anchor adds a cable anchorage along the main highway, similar to the Type 31 Strong Post Anchor Terminal (Section 12.4.K.1). The Type 31 Strong Post In-Line Anchor should be used at intersections and driveways regardless of radius, except where located

less than 50 ft from a bridge or other anchorage. The Type 31 Strong Post In-Line Anchor develops tension for impacts immediately downstream of the cable attachment.

RC-54M provides construction details of a Type 31 Strong Post In-Line Anchor along the main highway and applies only to Strong Post Guide Rail. The Type 31 Strong Post In-Line Anchor may be used in conjunction with the following:

- Curved W-Beam Guide Rail at Intersections (see Section 12.4.Q and RC-54M). Use with long breakaway timber posts. This installation extends from the strong post guide rail along the main highway on a radius ≤ 35 ft to an intersecting roadway. This installation may also be considered on a case-by-case basis with a radius > 35 ft. RC-54M provides construction details. The curved W-beam guide rail is to be bolted to long breakaway timber posts. It is desirable for the area behind the curved W-beam guide rail to be level and maintained free of fixed objects or hazards.

- Treatment at Intersections and Driveways (see RC-54M). Refer to Section 12.4.K.3 for appropriate use of the in-line anchor in combination with a Terminal Section, Single.

For Type 31 Strong Post Guide Rail that is terminated on the main highway, use a proper end treatment in place of the Type 31 Strong Post In-Line Anchor.

Plain Cement Concrete Curb or Plain Concrete Mountable Curb is not to be installed within the pay limit for a Type 31 Strong Post In-Line Anchor as shown on RC-51M.

Q. Guide Rail with Short Radius. RC-54M provides construction details for guide rail with a short radius (≤ 35 ft). Typically, an in-line anchor is needed for guide rail with short radius to provide tension in the guide rail. Refer to Section 12.4.P for further information on the in-line anchor.

R. Steel Posts over Underground Structures. For guide rail installations where proper post embedment cannot be achieved across low-fill culverts, small structures, or underground obstructions, steel posts over underground structures may be a design option.

RC-51M presents a construction detail of steel posts over underground structures. The detail depicts a post from strong post guide rail that is bolted to a shallow, reinforced concrete foundation (moment slab) and is built on top of the obstruction.

12.5 ROADSIDE BARRIER PLACEMENT

Upon deciding that a roadside barrier is to be considered at a given location, and selecting the type of barrier to be used, the designer should specify the exact layout to be constructed. The major factors that must be considered include the following:

- Lateral Offset (from the edge of traveled way)
- Terrain Effects
- Flare Rate
- Length of Need

Most of these factors are interrelated to the extent that the final design may be a compromise selected by the designer. More detailed guidelines on each of these factors are included in the next subsections.

A. Lateral Offset. A roadside barrier should be placed as far from the traveled way as possible, while maintaining the proper operation and performance of the system. Such placement reduces the likelihood of errant vehicles impacting the barrier. It also provides better sight distance, particularly at nearby intersections.

The minimum unobstructed distance behind a barrier is a critical factor in its selection as well as in its placement, especially if the obstruction being shielded is a rigid object. In some cases, the available space between the barrier and the object may not be adequate. In such cases, the barrier should be stiffened in advance of and alongside the fixed object. Commonly used methods to reduce deflection in a semi-rigid or flexible barrier system include

reduced post spacing, increased post size, use of soil plates, intermediate anchorages, and stiffened rail elements. The effects on deflection of reduced post spacing are shown in Table 12.4 with the individual barrier descriptions. In some cases, a more rigid barrier type may be needed.

A barrier-to-embankment distance of 2 ft, as shown in the AASHTO Roadside Design Guide, Figure 5-33, is desirable for adequate post support but may vary depending on the slope of the embankment, soil type, expected impact conditions, and post cross section and embedment. Increasing the embedment length of guide rail posts by 1 ft or more can compensate for the reduced soil foundation support near the slope break point.

B. Terrain Effects. Regardless of the type of roadside barrier being used or the size and type of vehicle that strikes it, the best results will usually occur if, at the moment of impact, all of the vehicle's wheels are on the ground and its suspension system is neither compressed nor extended. Conversely, terrain conditions between the traveled way and the barrier can have significant effects on the barrier's impact performance.

A vehicle traveling on a roadside slope may: (1) override W-beam guide rail when the vehicle is partially airborne at the moment of impact; or (2) underride W-beam guide rail elements and snag on the support posts if the vehicle strikes the barrier too low.

The slopes between a roadside barrier installation and the roadway are to be 1V:10H or flatter.

C. Flare Rate. A roadside barrier is considered flared when it is not parallel to the edge of traveled way. The flare is normally used to locate the barrier terminal farther from the roadway in order to minimize a driver's reaction to an obstruction near the road. The flare gradually introduces a parallel barrier installation, transitions a roadside barrier to an obstruction nearer the roadway such as a bridge parapet or railing, or reduces the total length of barrier needed.

One disadvantage to flaring a section of roadside barrier is that the greater the flare rate, the higher the angle at which the barrier can be hit. As the angle of impact increases, the severity of the crash increases, particularly for rigid and semi-rigid barrier systems.

As shown in Table 12.8, the maximum recommended flare rates are a function of design speed and barrier type. Flatter flare rates may be used and often are, particularly where extensive grading would be required to ensure a flat approach to the barrier from the traveled way.

TABLE 12.8
FLARE RATES FOR BARRIER DESIGN

DESIGN SPEED (mph)	MAXIMUM FLARE RATES	
	CONCRETE BARRIER	GUIDE RAIL
70	20:1	15:1
65	19:1	15:1
60	18:1	14:1
55	16:1	12:1
50	14:1	11:1
45	12:1	10:1
40	11:1	9:1
35	10:1	8:1
30	8:1	7:1

Note: The required length of barrier and flare rate for each location will be determined by the designer and will be shown on the tabulation sheets and remarks column.

D. Length of Need. Figure 12.5 illustrates the variables that should be considered in designing a roadside barrier to shield a condition effectively. The primary variables are the Runout Length, L_R, and the Lateral Extent of The Obstruction, L_A.

The Runout Length, L_R, as presented in Table 12.9, is the theoretical distance needed for a vehicle that has left the roadway to come to a stop. It is measured from the upstream extent of the obstruction, along the roadway, to the point at which a vehicle is assumed to leave the roadway. These distances have been further modified to reduce the length of barrier on low volume facilities.

The Lateral Extent, L_A, is the distance from the edge of through traveled way to the far side of the obstruction if it is a fixed object or to the outside edge of the clear zone, L_C, if it is an embankment or a fixed object that extends beyond the clear zone. Selection of an appropriate L_A distance is a critical part of the design process.

Once L_R and L_A have been selected, the length of barrier required at a specific location depends upon the tangent length of barrier upstream from the obstruction (L_1), its lateral distance from the edge of through traveled way (L_2) and the flare rate (a:b) specified for the installation.

The tangent length of the barrier immediately upstream from the obstruction (L_1) is a variable length selected by the designer. If a semi-rigid barrier is connected to a rigid barrier, the tangent length should be at least as long as the transition section to reduce the possibility of pocketing at the transition and to increase the likelihood of smooth redirection if the guide rail is impacted immediately adjacent to the rigid barrier.

The final variable to be selected by the designer to calculate the needed length of guide rail at a specific location is the flare rate (see Table 12.8).

Once the appropriate variables have been selected, the required length of need, X, in advance of the obstruction can be calculated with the following equation:

$$X = \frac{L_A + (b/a)(L_1) - L_2}{b/a + (L_A / L_R)}$$

Note that for a parallel installation, i.e., no flare rate, the above equation reduces to:

$$X = \frac{L_A - L_2}{(L_A / L_R)}$$

The lateral offset, Y, from the edge of traveled way to the beginning of the length of need can be calculated using the following equation:

$$Y = L_A - \frac{L_A}{L_R}(X)$$

Figure 12.6 illustrates the layout variables of an approach barrier for opposing traffic. The length of need, X, is determined in the same manner as previously described, but all lateral dimensions are measured from the left edge of traveled way of the opposing traffic, i.e., from the centerline for a two-lane roadway. If there is a two-way divided roadway, the edge of traveled way for the opposing traffic would be the edge of the driving lane on the median side.

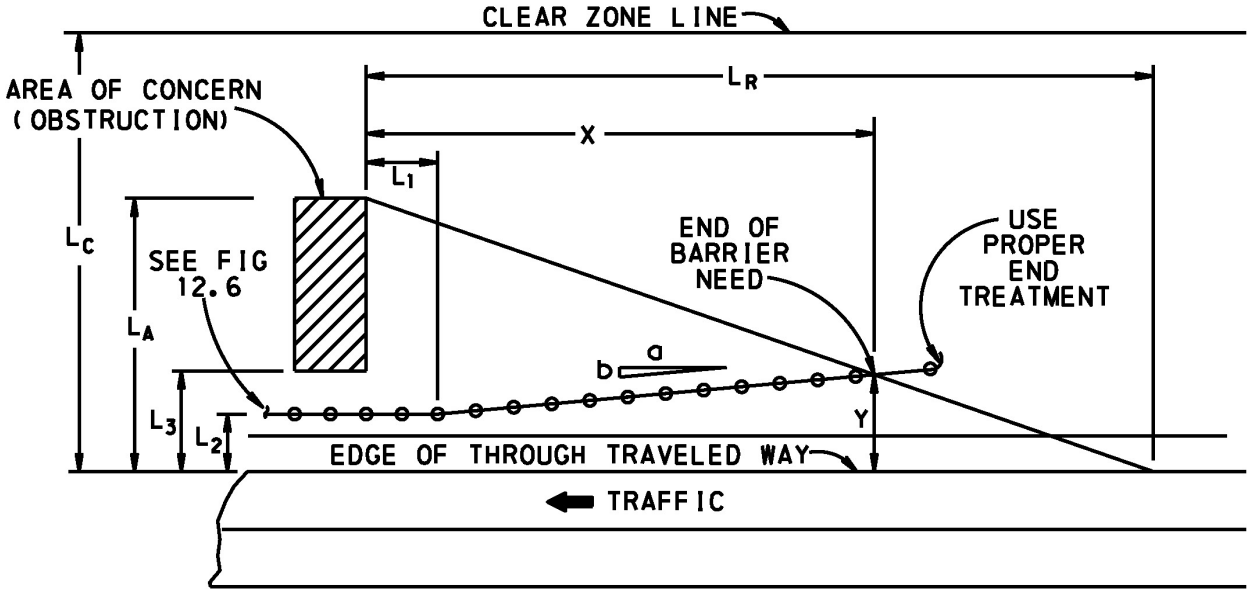

Where: X = DISTANCE FROM OBSTRUCTION TO END OF BARRIER NEED.
Y = DISTANCE FROM EDGE OF THROUGH TRAVELED WAY TO END OF BARRIER NEED.
L_A = DISTANCE FROM EDGE OF THROUGH TRAVELED WAY TO LATERAL EXTENT OF OBSTRUCTION.
L_1 = TANGENT LENGTH OF BARRIER UPSTREAM FROM OBSTRUCTION.
L_2 = DISTANCE FROM EDGE OF THROUGH TRAVELED WAY TO BARRIER.
L_3 = DISTANCE FROM EDGE OF THROUGH TRAVELED WAY TO OBSTRUCTION.
L_C = DISTANCE FROM EDGE OF THROUGH TRAVELED WAY TO THE OUTSIDE EDGE OF THE CLEAR ZONE.
L_R = THE THEORETICAL RUNOUT LENGTH NEEDED FOR A VEHICLE LEAVING THE ROADWAY TO STOP.
a : b = FLARE RATE.

FIGURE 12.5
APPROACH BARRIER LAYOUT

TABLE 12.9
DESIGN PARAMETERS FOR
ROADSIDE BARRIER LAYOUT

DESIGN SPEED (mph)	DESIGN TRAFFIC VOLUME (ADT)			
	1000 & UNDER	1001 - 5000	5001 - 10000	OVER 10000
	L_R*	L_R*	L_R*	L_R*
70	250	290	330	360
65	225	250	290	330
60	200	210	250	300
55	175	185	220	265
50	150	160	190	230
45	125	135	160	195
40	100	110	130	160
35	85	95	110	135
30	70	80	90	110

*L_R = RUNOUT LENGTH (IN FEET)

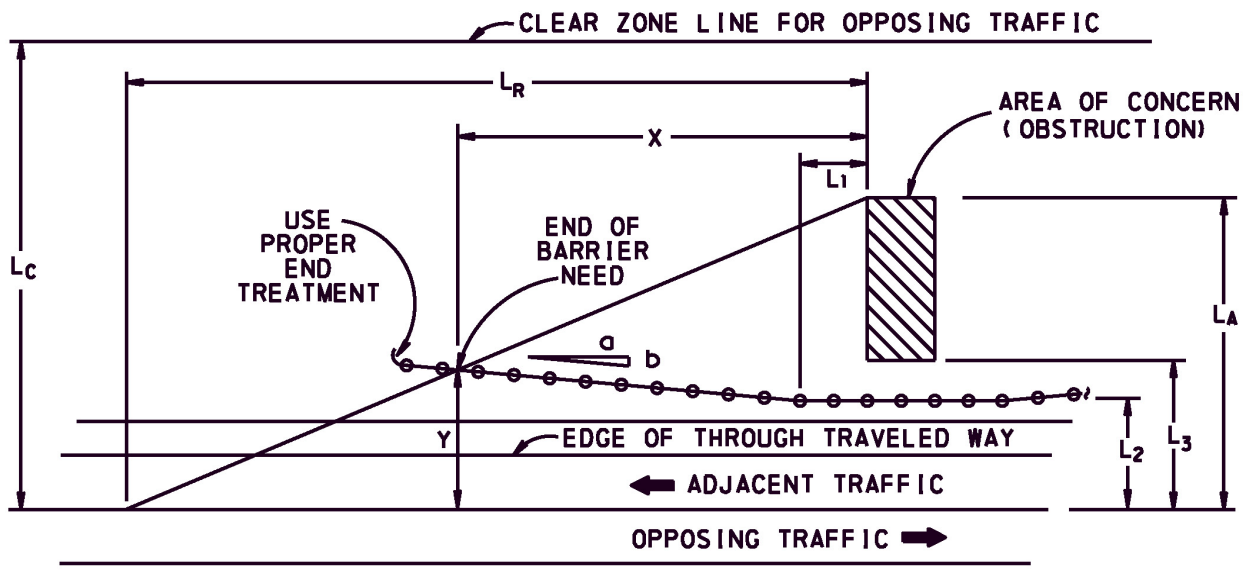

Where: X = DISTANCE FROM OBSTRUCTION TO END OF BARRIER NEED.
Y = DISTANCE FROM EDGE OF THROUGH TRAVELED WAY TO END OF BARRIER NEED.
L_A = DISTANCE FROM EDGE OF THROUGH TRAVELED WAY TO LATERAL EXTENT OF OBSTRUCTION.
L_1 = TANGENT LENGTH OF BARRIER UPSTREAM FROM OBSTRUCTION.
L_2 = DISTANCE FROM EDGE OF THROUGH TRAVELED WAY TO BARRIER.
L_3 = DISTANCE FROM EDGE OF THROUGH TRAVELED WAY TO OBSTRUCTION.
L_C = DISTANCE FROM EDGE OF THROUGH TRAVELED WAY TO THE OUTSIDE EDGE OF THE CLEAR ZONE.
L_R = THE THEORETICAL RUNOUT LENGTH NEEDED FOR A VEHICLE LEAVING THE ROADWAY TO STOP.
a : b = FLARE RATE.

FIGURE 12.6
APPROACH BARRIER LAYOUT FOR OPPOSING TRAFFIC

There are three ranges of clear zone width, L_C, that deserve special attention for an approach barrier for opposing traffic:

1. If the barrier is beyond the appropriate clear zone, consider a crashworthy end treatment on two-lane undivided roadways but not on trailing ends of guide rail on divided roadways.

2. If the barrier is within the appropriate clear zone but the area of concern is beyond it, no additional barrier is required; however, a crashworthy end treatment should be used.

3. If the area of concern extends well beyond the appropriate clear zone (e.g., a river), the designer may choose to shield only that portion which lies within the clear zone, by setting L_A equal to L_C in Figure 12.6.

A traffic barrier should be set as far as possible from the edge of traveled way. For standard guide rail installation, the slopes between a barrier installation and the roadway are to be 1V:10H or flatter (see Figure 12.7).

Perhaps the most straightforward method to determine length of need is to scale the barrier layout directly on the plan sheets. If a permanent impact attenuating device is to be installed at the end of the barrier, the length of need may include the length for the non-gating portion of the permanent impact attenuating device. The non-gating portion is intended to redirect a vehicle during a side angle impact. For example, if a Type II tangent, energy absorbing terminal is to be installed (see Section 12.9.E), use the shortest length for the non-gating portion of all Bulletin 15 approved, Type II tangent, energy absorbing terminals.

By selecting an appropriate runout length and the lateral distance to be shielded, the designer can specify a guide rail installation (i.e., lateral offset and flare) that satisfies all placement criteria. This method is most appropriate for determining the length of barrier needed to shield embankments or fixed objects on non-tangent sections of roadway. Examples of this technique are provided below in Section 12.5.E (see Figures 12.8 through 12.10).

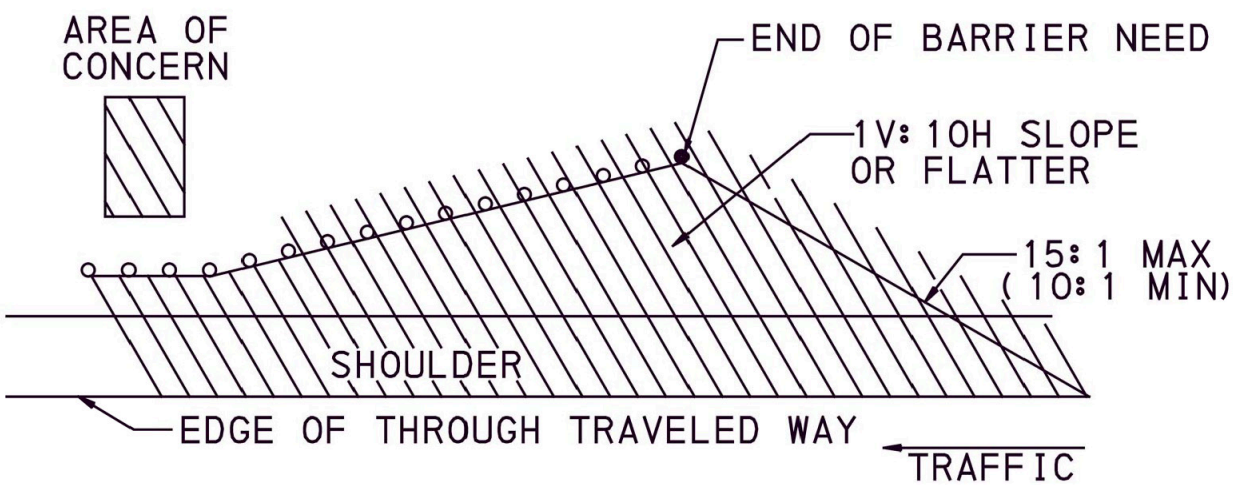

FIGURE 12.7
ROADSIDE SLOPES FOR APPROACH BARRIERS

E. Example Problems.

EXAMPLE:

GIVEN: ADT = 6200
Design Speed = 70 mph
Embankment Slope = 1V:10H (right);
1V:10H (median)

SELECT: Clear Zone, L_C = 30 ft (for 1V:10H slope from Table 12.1)
Clear Zone = 30 ft (for 1V:10H median slope from Table 12.1)
Lateral Extent of Area of Concern, L_A = 30 ft
Runout Length, L_R = 330 ft (from Table 12.9)
Transition, L_1 = 43.75 ft
Barrier Offset, L_2 = 10 ft (right)
= 6 ft (median)
Flare Rate = 15:1 (from Table 12.8)

DISCUSSION:

For the right shoulder installation, the designer can scale 330 ft back from the bridge rail end and 30 ft laterally from the same point. The hypotenuse of this triangle approximates a vehicle's runout path. To shield the bridge end and the river to the edge of the clear zone, the barrier installation should intersect this line. Based on the variables selected, a barrier length of 145.4 ft is needed. If a parallel installation was utilized, the length of need would be 220 ft. Calculations for the flared installation are as follows:

$$\text{Length of Need} = \frac{30 + (1/15)(43.75) - 10}{(1/15) + (30/330)} = 145.4 \text{ ft}$$

Note that on the median side, the designer may shield the entire opening even though this distance exceeds the recommended clear zone for the 1V:10H slope. This emphasizes that the clear zone distance is not a precise number and that engineering judgment should be used in its application.

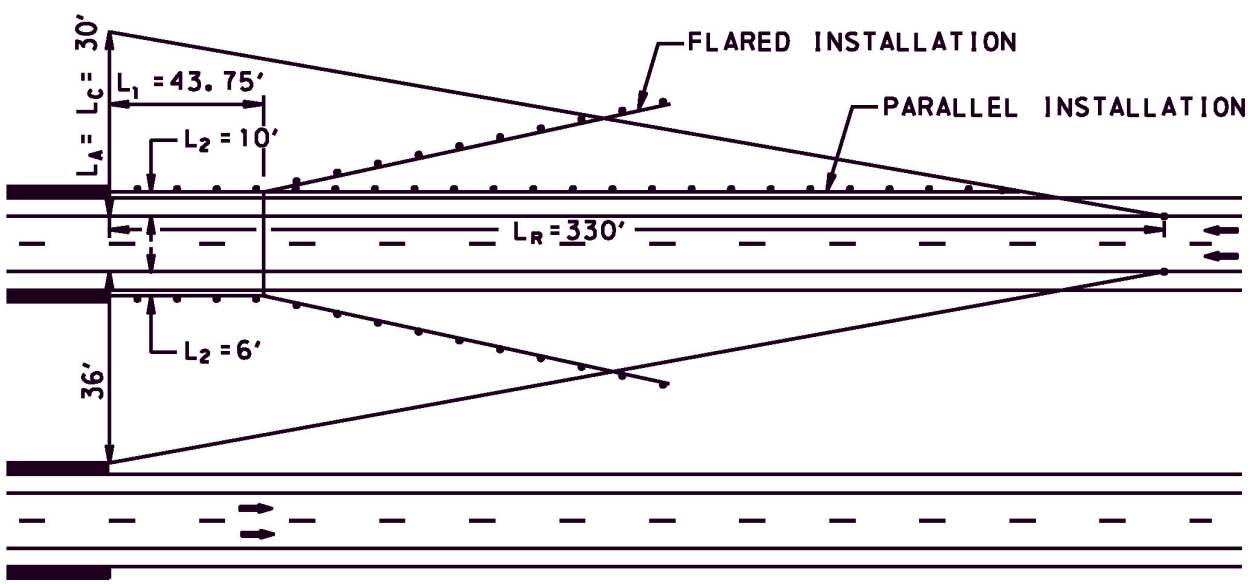

FIGURE 12.8
EXAMPLE OF BARRIER DESIGN
FOR BRIDGE APPROACH

GIVEN: ADT = 3000
Design Speed = 70 mph
Embankment Slope at Beginning of L_R = 1V:10H
Slope at L_C is Critical, i.e., steeper than 1V:3H

SELECT: Clear Zone, L_C = 30 ft (from Table 12.1)
$L_A = L_C$
Runout Length, L_R = 290 ft (from Table 12.9)
Barrier Offset, L_2 = 6.6 ft

DISCUSSION:

The area of concern begins at the top of the critical slope. Because the purpose of a barrier installation is to reduce the likelihood of a vehicle from reaching a non-traversable terrain feature or fixed object, the designer may elect to shield more of the slope by selecting a larger clear zone distance. It might be advantageous to review planned barrier lengths on site for proper length-of-need before installation.

The barrier may be terminated by anchoring it in a backslope or installing a crashworthy terminal. A buried-in-backslope terminal can shield the entire embankment area if the site grading is done appropriately. Before installing a buried-in-backslope terminal, the site layout and detailed review of the cross sections should be conducted. This will include consideration of ditch configurations, drainage requirements, and the configuration of the backslope.

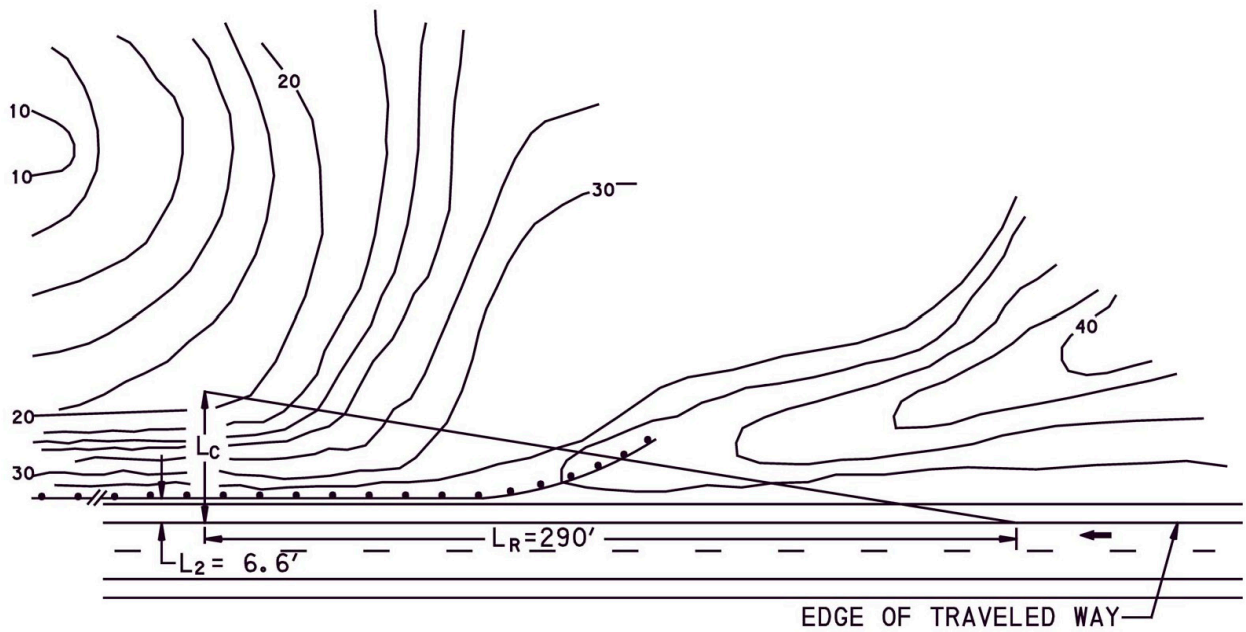

FIGURE 12.9
EXAMPLE OF BARRIER DESIGN FOR NONTRAVERSABLE EMBANKMENT

GIVEN: ADT = 650
Design Speed = 60 mph
Embankment Slope = 1V:10H
Horizontal Curvature = 1475 ft radius

SELECT: Clear Zone, L_C = 16 ft (from Table 12.1)
Adjustment Factor for Curvature = 1.4 (from Table 12.2)
Adjusted Clear Zone = (16)(1.4) = 22 ft
Runout Length, L_R = Not Applicable (see DISCUSSION below)
Barrier Offset, L_2 = 4 ft
Flare Rate = Not Applicable

DISCUSSION:

The length of need formula for a traffic barrier is based on a straight highway alignment. A vehicle leaving the roadway on the outside of a curve will follow a tangential runout path if the area outside the roadway is flat and traversable. Thus, rather than using the theoretical L_R distance to determine the barrier length of need, a line from the outside edge of the obstacle (or to the clear zone if the condition is continuous, such as the streambed shown in Figure 12.10) should be used to determine the appropriate length of barrier needed. The barrier length then becomes a function of the distance from the edge of the driving lane and can most readily be obtained graphically by scaling. A flare rate is not generally used along a horizontal curve.

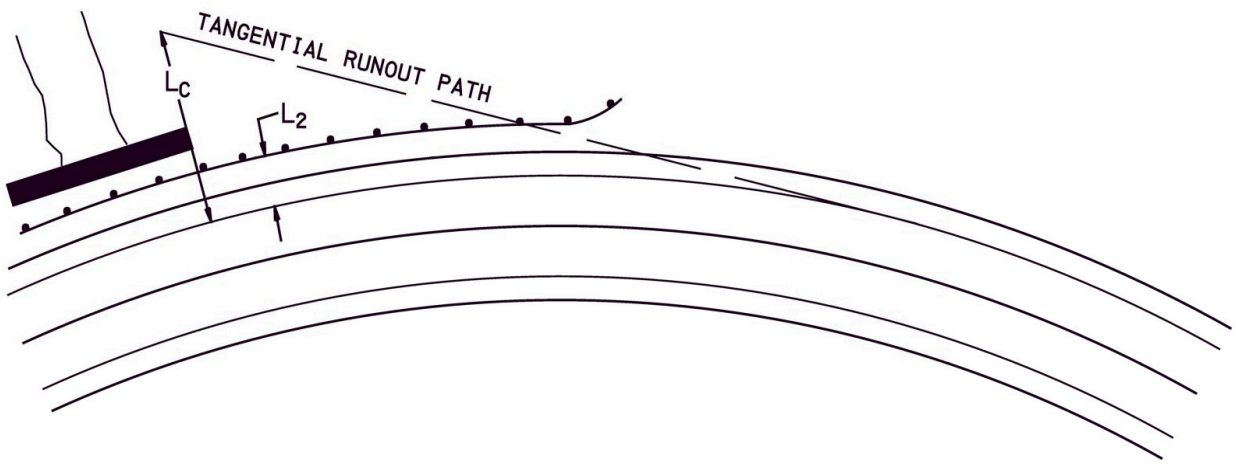

FIGURE 12.10
EXAMPLE OF BARRIER DESIGN FOR
FIXED OBJECT ON HORIZONTAL CURVE

12.6 MEDIAN BARRIER

A. Median Barrier Guidelines. Median barrier represents a longitudinal system used to prevent an errant vehicle from crossing the median of a divided highway. A median separates the traffic moving in opposite directions. However, median barriers, as discussed in this Chapter, are those designed to redirect vehicles striking either side of the barrier.

It is recognized that the increased use of median barriers has some disadvantages. The initial costs of installing a barrier can be significant. In addition, the installation of a barrier will generally increase the number of reported crashes as it reduces the recovery area available. As a result, there could be increased maintenance costs to repair the barrier as well as increased exposure to the maintenance crews completing the repairs. Another concern associated with the installation of a median barrier is that it will limit the options of maintenance and emergency service vehicles to cross the median. In snowy climates, a median barrier may also affect the ability to store snow in the median. There may be other environmental impacts depending on the grading needed to install the barrier. For these reasons, a one-size-fits-all recommendation for the use of median barrier is not appropriate.

The need for median barriers is based on several factors including, but not limited to, median width, traffic volume and crash history. Figure 12.11 presents guidelines for median barriers based on two of these factors, median width and traffic volume. The guidelines presented in Figure 12.11 are for use on high speed, fully access-controlled roadways which have flat, traversable medians. A high-speed roadway is defined as having a posted speed limit of 45 mph or greater.

Crash data indicating a high number of head-on and/or sideswipe crashes or substandard horizontal and/or vertical alignment may also be considered in evaluating the need for a median barrier.

These median barrier guidelines are to be considered an indicator that consideration should be given to utilizing the barrier. Satisfaction of these guidelines is not a guarantee that a barrier is needed. As such, these guidelines should be considered in the determination of the need for a barrier rather than absolute criteria.

Specific median barrier guidelines for high-speed, divided highways are as follows:

1. New Roadways on New Alignment.

a. Median Widths Less Than or Equal to 30 ft. All new high-speed divided highways with a proposed median width of 30 ft or less shall be designed and constructed with an approved median barrier system.

b. Median Widths Greater Than 30 ft and Less Than 50 ft. All new high-speed divided highways with a proposed median greater than 30 ft and less than 50 ft shall be designed to allow for the future installation of a median barrier system by providing a 6 ft level area in the median. The District Safety Review Committee shall review the proposed roadway horizontal and vertical alignment to determine if the median is traversable. If the design ADT is greater than 20,000 and if the median is traversable, then the designer shall consider placement of barrier, and the District Safety Review Committee would concur with the designer's decision.

c. Median Widths Greater Than or Equal to 50 ft. All new high-speed divided highways with a proposed median of 50 ft or greater shall be designed to allow for the future installation of a median barrier system by providing a 6 ft level area in the median.

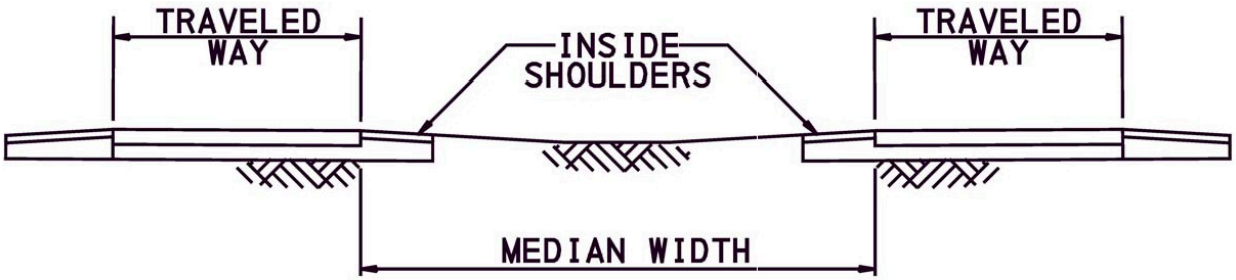

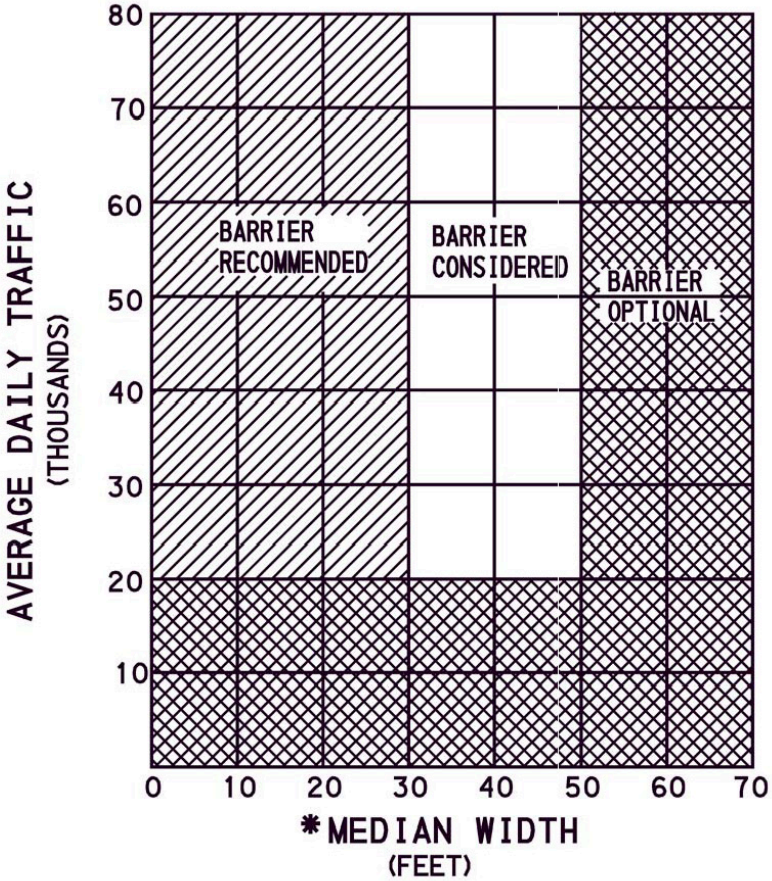

* MEASURED FROM EDGE OF TRAVELED WAY TO EDGE OF TRAVELED WAY AND INCLUDES BOTH INSIDE SHOULDERS.

FIGURE 12.11
MEDIAN BARRIER GUIDELINES ON HIGH-SPEED, FULLY CONTROLLED-ACCESS ROADWAYS

2. Existing Roadways on Existing Alignment.

a. Median Widths Less Than 50 ft. All existing high-speed divided highways with an existing median of 50 ft or less will be evaluated for the need for median barrier during the design of every highway improvement project. The District Safety Review Committee will review the existing horizontal and vertical alignment and existing median slopes to determine if the existing median is traversable. If the existing median is determined to be traversable, the District Safety Review Committee will review the roadway's existing horizontal and vertical alignment, crash history, traffic volumes, and vehicle classifications. From that review, the District Safety Review Committee will determine if a median barrier system is needed for the entire project or just certain curve or tangent sections of the roadway. The District Safety Review Committee should make its recommendations before Design Field View.

For projects not on the National Highway System (NHS), the District Executive will review the District Safety Review Committee recommendations and approve or disapprove the recommendations. For projects on the NHS with Federal Oversight (FO), the FHWA will review the District Safety Review Committee recommendations and approve or disapprove the recommendations. For projects on the NHS with PENNDOT Oversight (PO), the District Executive will review the District Safety Review Committee recommendations and approve or disapprove the recommendations.

b. Median Widths Greater Than or Equal to 50 ft. All existing high-speed divided highways with an existing median of 50 ft or greater will be evaluated for the need for median barrier during the design of every highway improvement project. The District Safety Review Committee will review the existing horizontal and vertical alignment and existing median slopes to determine if the existing median is traversable. If the existing median is determined to be traversable, the District Safety Review Committee will review the roadway's existing horizontal and vertical alignment, crash history, traffic volumes, and vehicle classifications. From that review, the District Safety Review Committee will determine if a median barrier system is needed for the entire project or just certain curve or tangent sections of the roadway. The District Safety Review Committee should make its recommendations before Design Field View.

For projects not on the NHS, the District Executive will review the District Safety Review Committee recommendations and approve or disapprove the recommendations. For projects on the NHS with Federal Oversight (FO), the FHWA will review the District Safety Review Committee recommendations and approve or disapprove the recommendations. For projects on the NHS with PENNDOT Oversight (PO), the District Executive will review the District Safety Review Committee recommendations and approve or disapprove the recommendations.

For locations with median widths equal to or greater than 50 ft, a barrier is not normally considered except in special circumstances such as a location with a significant history of cross-median crashes.

Since these median barrier guidelines are based on average or normal conditions, they are not conclusive justification for the installation of a barrier at any particular location, nor are they a substitute for engineering judgment. The unique circumstances of each location and the amount of funds available will dictate if and when a barrier should be installed.

Median barriers are sometimes used on high-volume facilities, which do not have fully controlled access. As indicated in Figure 12.11, these median barrier guidelines were developed for use on high-speed, fully controlled-access roadways. Utilizing these median barrier guidelines on roadways that do not have full access control requires the need for engineering analysis and judgment, taking into consideration such items as, right-of-way constraints, property access needs, number of intersections and driveway openings, adjacent commercial development, sight distance at intersections, barrier end termination, etc.

The following median barriers are acceptable for use:

1. F-shape concrete median barrier (32 in, 42 in, or 50 in---see Section 12.7)
2. Single slope concrete median barrier (42 in)
3. Weak or strong steel-post W-beam guide rail
4. High-tension cable barrier (see Section 12.6.D) or other appropriate systems

B. Selection Guidelines. The desired level of barrier performance should be among the first decisions for selection of a median barrier.

Use the following guidelines for installation of median barrier:

1. Access Controlled Freeways. For access controlled freeways, the decision to install a median barrier should be considered based on the guidance in Section 12.6.A. When a median barrier is to be installed, the median barrier should provide the desired level of barrier performance and also accommodate the available deflection distance. A rigid barrier (e.g., concrete median barrier) provides the highest level of barrier performance to contain and redirect the design vehicle for a given test level (e.g., single-unit van truck for Test Level 4) and to minimize the deflection distance. In comparison, a semi-rigid barrier (e.g., Type 31 Strong Post Guide Rail) or a flexible barrier (e.g., high-tension cable barrier) provides a lower level of barrier performance to contain and redirect vehicles and have larger deflection distances, but lower impact forces on the vehicle and its occupants.

2. Ramps. When barrier is specified, concrete median barrier is used. Guide rail and high-tension cable barrier may be considered depending on the median width, cross slopes, and other considerations.

3. Free Access Facilities. Along free access facilities with four or more lanes, careful consideration should be given to the installation of median barrier. Before median barrier is installed on these facilities, the available median width, number of crossovers, crash history, alignment, sight distance, design speed, and traffic volumes need to be considered. The intent of the median barrier is to prevent crossover type crashes and not to control turning movements.

4. Two- or Three-Lane Facilities. For two-lane or three-lane, two-way highway facilities, the installation of median barrier is not required.

Special attention should be given to properly adjust the edge of traveled way grades on the median sides of superelevated sections to assure a barrier system can be utilized.

Generally, the type of median barrier used on the approaching roadway, adjacent to a structure, should also be carried across the structure.

Where median barrier is proposed on a facility which has existing barriers adjacent to the project, the existing type of barrier should be continued if the added length is about 1000 ft or less and the median widths are similar.

Where left-hand turning lanes are provided, the barriers shall be terminated with impact attenuating devices or other safety measures in advance of the turning lanes based on the posted speed limit.

Other significant factors to consider in the lateral placement of a median barrier are the effect of the terrain between the edge of traveled way and the barrier, the flare rate at transition sections, and the treatment of rigid objects in the median.

When it becomes necessary to flare a median barrier in order to shield a rigid object in a median, the flare rate should be gradual and within acceptable limits. For minimum flare rates, refer to Table 12.8.

C. Median Barrier End Treatments. Median barrier termination is ideally accomplished where the median is wide and exposure to the end is limited. Proper end treatments such as end transitions or impact attenuating devices, based on type of facility should be provided to reduce vehicle deceleration upon impact and provide protection against spearing. End treatments may be tapered, flared or both.

1. Tapered End Treatments. This type of end treatment is primarily intended to eliminate the spearing or high deceleration characteristics of blunt-ended terminals. However, since a tapered end treatment can cause an impacting vehicle to become airborne and/or overturn, its use should be limited to situations and/or locations where end-on impacts are unlikely.

A typical end transition may be used for permanent barrier installations only when the last median barrier section is located outside the required clear zone. When concrete median barrier is terminated and is within the clear zone, use an impact attenuating device.

For barrier installations, an impact attenuating device is not required if any of the following conditions are satisfied:

a. The barrier is extended at the proper flare rate until the end of the barrier system is located outside the required clear zone.

b. The barrier is extended at the proper flare rate until the end of the barrier system can be buried in a cut section.

c. The barrier is extended at the proper flare rate until the end of the barrier system is properly connected or overlapped with existing guide rail.

Refer to Table 12.8 for flare rate requirements of permanent concrete barrier installations.

2. Flared End Treatment. In this case, the barrier can be introduced far enough from the approaching traffic that no additional safety treatment is needed. The flare rate should meet the minimum criteria shown in Table 12.8.

3. Flared and Tapered End Treatment. By combining Items 1 and 2 above, a median barrier terminal can be located where it is unlikely to be hit and designed so any impacts that do occur do not result in severe crashes.

The most desirable median is one that is relatively flat and free of rigid objects where the barrier is normally placed at the center of the median. When the cross slope becomes steeper than 1V:10H in depressed or mounded medians, placement of the barrier depends on the rate and height of the slope and other geometric relationships between opposing traffic. Illustrations and suggestions on median barrier placement are found in the AASHTO Roadside Design Guide, Chapter 6.

In a given location, a median treatment may be needed to shield a fixed obstruction such as a bridge pier, an opening between dual structures, or an overhead sign support structure. The AASHTO Roadside Design Guide and Publication 72M, *Roadway Construction Standards*, RC-54M provides typical details for median treatments at dual structures. For flat and narrow medians with dual structures, Figure 12.12 provides an alternative example of median barrier placement for shielding an opening between dual structures.

For additional construction details of median barrier end treatments, refer to the RC-50M Series of Standard Drawings in Publication 72M, *Roadway Construction Standards*. Also, for design guidelines and selection procedures for impact attenuating devices, refer to Section 12.9.

INTENTIONALLY BLANK

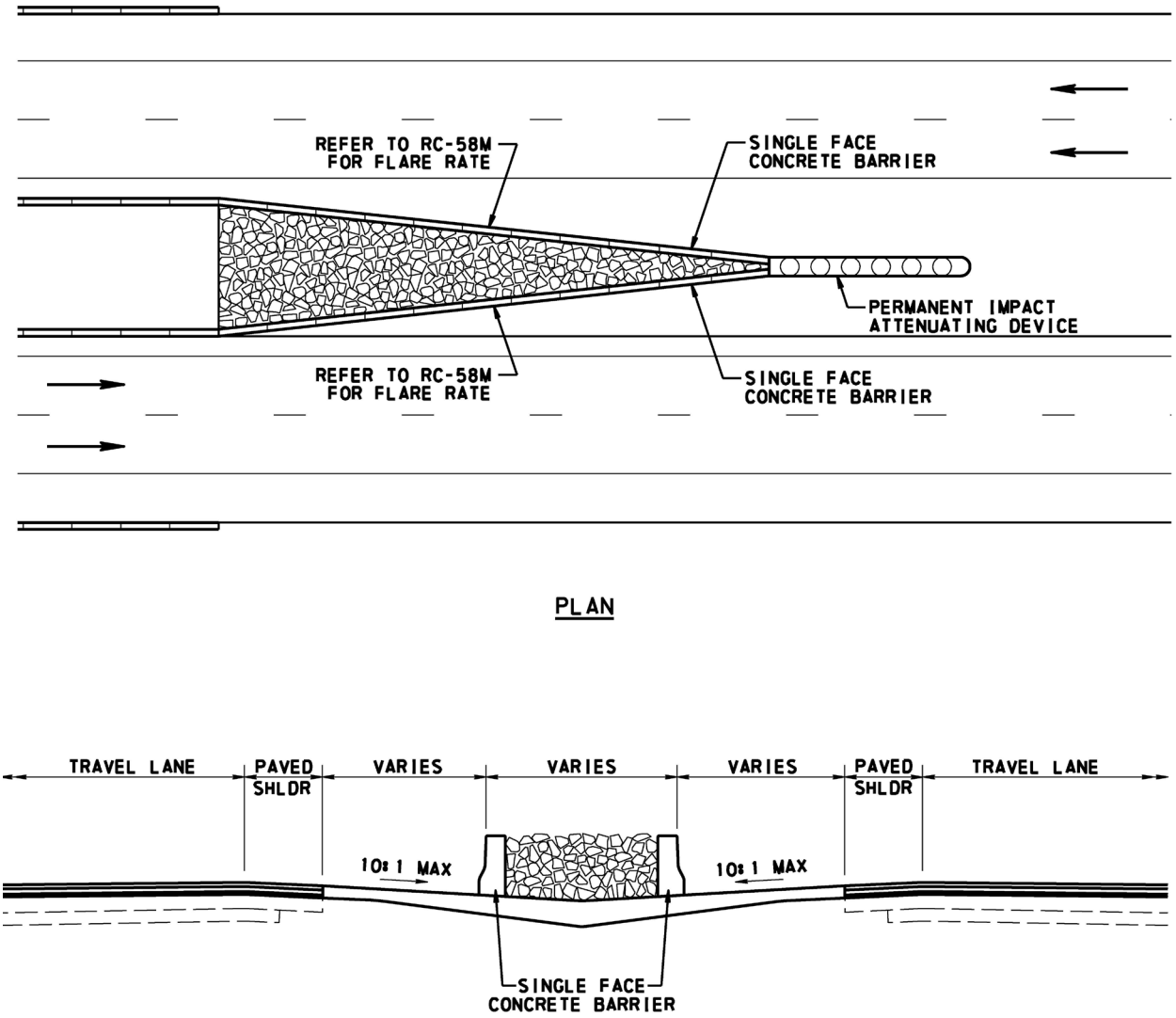

FIGURE 12.12
EXAMPLE LAYOUT FOR SHIELDING AN OPENING BETWEEN DUAL STRUCTURES

D. High-Tension Cable Barrier. Installations of high-tension cable barrier aim to gradually redirect or arrest an impacting vehicle by stretching of the cables and minimizing forces on the vehicle and its occupants. A flexible barrier system such as high-tension cable barrier typically results in less damage to a vehicle compared to other systems. In many cases, the cables remain at the proper height even if the impact has damaged several posts.

Compared to other barrier types, high-tension cable barrier has reduced impact severity, relatively low initial installation cost, and suitability for various median and roadside environments.

Compared to no median barrier, installing high-tension cable barrier advantages and disadvantages will vary depending on median widths, and other geometric and location specific factors. Some advantages of high-tension cable barrier include keeping vehicles from crossing the median or leaving the roadway and fewer fatalities. Some disadvantages include the need to complete inspection and maintenance regularly, more Property Damage Only (PDO) crashes, and more minor injury crashes.

An additional reference for high-tension cable barrier is NCHRP Report 711, *Guidance for the Selection, Use, and Maintenance of Cable Barrier Systems* (published in 2012).

1. MASH Criteria. High-tension cable barrier and end anchor terminals are to comply with MASH criteria and Test Levels as shown in Table 12.10 for new permanent installations and for full replacements. (Refer to Table 12.3 for Test Levels.)

TABLE 12.10
MASH TEST LEVEL CRITERIA
FOR HIGH-TENSION CABLE BARRIER SYSTEMS

DESCRIPTION	CROSS SLOPE	TESTED CRITERIA	MASH TEST LEVEL
High-Tension Cable Barriers	1V:10H or Flatter (Level Terrain)	MASH 2016 or MASH 2009**	TL-4
	Steeper Than 1V:10H But No Steeper Than 1V:4H*	MASH 2016 or MASH 2009**	TL-3
High-Tension Cable Barrier End Anchor Terminals	1V:10H or Flatter (Level Terrain)	MASH 2016	TL-3

*Systems installed on cross slopes steeper than 1V:10H but no steeper than 1V:4H must be compliant with both the MASH TL-4 on level terrain and the MASH TL-3 on 1V:4H.

**MASH 2009 only allowed if crash tested prior to 2016.

Publication 35, *Approved Construction Materials* (Bulletin 15), lists the approved high-tension cable barriers and end anchor terminals that satisfy the MASH criteria, including the associated Test Level for the terrain cross slope. Systems which are only MASH compliant on level terrain must have level terrain on both sides of the barrier that can be hit.

2. Number of Cables. High-tension cable barrier requires a minimum of four or more cables because four or more cables provide a wider interface area and safety net to accommodate most vehicle types and with respect to having at least two cables engage the vehicles.

3. Post Spacings and Deflection. Deflection of high-tension cable barrier is a function of post spacing and generally the length of system between end anchor terminals and the horizontal radius.

Typically, the greater the post spacing or the greater the system length, the greater the potential deflection. Post spacing can be reduced where lower deflection is needed, or where horizontal/vertical curvature may affect cable integrity.

For bidding purposes, the Construction Plan is to indicate the specific locations (by stations or by segments and offsets) and the lengths where reduced post spacing is required for high-tension cable barrier.

Post spacings must account for the site-specific soil conditions to adequately support the high-tension cable barrier and to provide the necessary resistance when impacted. Moisture in the soil will influence the functionality of footings and posts for high-tension cable barrier. Wetter soil conditions may increase the potential deflection. If placement of high-tension cable barrier in wet soils is unavoidable, it is recommended to reduce post spacings.

Deflection is the unobstructed distance behind the barrier and does not include the width of the barrier. Deflections from a hit in any direction should not encroach into a travel lane. The maximum dynamic deflection distance / working width is 10 ft. Although the MASH TL-4 tests include various vehicles, the 10 ft deflection is based on MASH Test 4-11 with the 2270P test vehicle (pickup truck) on level terrain.

A maximum dynamic deflection distance / working width less than 10 ft, based on project conditions, may be included in the specifications in the PS&E package.

The post spacing to be installed is determined from either method below but regardless, the post spacing shall not be greater than the post spacing used during the MASH 3-17 and MASH 4-17 (sedan penetration) crash test or 18 feet, whichever is less.

- If the MASH 4-11 crash test with the 2270P test vehicle on level terrain was performed on a range of post spacings, then the post spacing to be installed is interpolated to meet the deflection requirement.

- If the MASH 4-11 crash test with the 2270P test vehicle on level terrain was performed at only one post spacing, then the post spacing to be installed must match the post spacing during crash testing. Also, the deflection determined during the crash testing must be less than the maximum required deflection.

A maximum post spacing for MASH systems less than the values obtained above, based on project conditions, may be specified in the PS&E package. In narrow medians, close post spacing (e.g., < 10 ft) and lower deflections (e.g., < 10 ft) may be specified in order for the deflection not to intrude into the opposing traffic lanes, or a more rigid barrier can be used, as appropriate.

For installations of high-tension cable barrier, the Department requires steel line posts in sockets which are encased in concrete foundations, according to manufacturer's recommendations. This arrangement is used primarily to reduce repair time and costs relative to posts driven in soil. At this time, driven posts and driven sockets are not allowed by the Department because of the lack of long-term performance data and because of maintenance costs.

There is a higher probability of high angle traffic conflicts in the vicinity of interchanges and hence the potential for barrier impacts at sharper angles. These concerns might dictate the use of a more rigid barrier other than high-tension cable barrier (e.g., strong post guide rail, concrete barrier) or the reduction of post spacing in the high-tension cable barrier to limit deflection for such impacts.

4. Transitions and Interconnections. High-tension cable barrier should not be transitioned into or connected with concrete barrier or guide rail until further testing and/or analyses are conducted, and adequate performance is achieved. Instead, high-tension cable barrier should preferably be offset laterally and overlapped longitudinally with other barrier systems. A minimum flare rate of 50:1 for the high-tension cable barrier may be specified to avoid existing barriers and for deceleration lanes of median crossovers. If the flare rate tapers the high-tension cable barrier towards traffic, specify the flare rate as flat as possible because of the potential for increased impact angles. Refer to Sections 12.6.D.5.e.(1)(a) and 12.6.D.5.e.(1)(b) for more information on offset and overlap.

5. System Placement. System placement takes a high-tension cable barrier and fits it into the specific environment of a highway corridor. Many applications of high-tension cable barriers are retrofit efforts to address crash problems or the potential for crashes for existing roadways. The placement of the high-tension cable barrier system, including the end anchor locations, should be shown in the drawings in the PS&E package.

The placement of a high-tension cable barrier system along the outside (right) shoulder is not recommended because right shoulders with fill slopes often cannot provide the minimum unobstructed distance that is needed behind a high-tension cable barrier system.

A high-tension cable barrier is typically not installed for the sole purpose to shield above ground obstructions such as bridge piers or overhead sign structures (i.e., it can shield obstructions, but is not typically installed for that purpose). Also, due to the cost of the end anchors and foundations, it is often not economical to install high-tension cable barrier for short lengths.

a. Cross Slope. Ideal placement on cross slopes in medians, listed in order of preference, is as follows:

(1) Where possible, locate on relatively flat, unobstructed terrain with a cross slope of 1V:10H or flatter.

(2) Locate on cross slopes of 1V:6H or flatter.

(3) If cross slopes are steeper than 1V:6H, consider regrading the cross slopes to meet either of the above recommendations.

(4) If regrading or other options are not feasible, placement of two high-tension cable barrier systems in the median may be considered on cross slopes steeper than 1V:6H and up to and including 1V:4H.

Refer to Bulletin 15 for a listing of the approved high-tension cable barrier systems with a given terrain cross slope.

b. Lateral Placement. To minimize risk of high-tension cable barrier being hit and to maximize performance during a hit, the following lateral placement (offset) principles are to be followed:

(1) A high-tension cable barrier should generally be installed as far from travel lanes as practical while maintaining the principles below. This reduces the potential for nuisance impacts and allows ample deflection space between opposing traffic lanes.

(2) Symmetric V-Shaped and Rounded Bottom Medians. As shown in Figure 12.13, symmetric V-shaped and rounded bottom medians of all cross slopes should not have high-tension cable barrier placed from 0 ft to 8 ft on either side of the center of the V-shape or rounded bottom. This guidance for placement is intended to minimize risk of underrides of small and midsize vehicles.

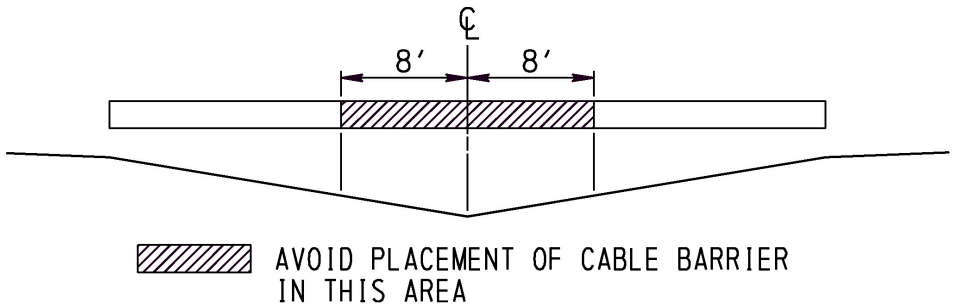

FIGURE 12.13
UNDERRIDE CRITERIA FOR HIGH-TENSION CABLE BARRIER IN V-SHAPED MEDIANS FOR ALL CROSS SLOPES

As shown in Figure 12.14, symmetric V-shaped and rounded bottom medians should not have high-tension cable barrier placed from 4 ft to 20 ft from the edge of the shoulder break point (or hinge point). This guidance for placement is intended to minimize risk of overrides of larger vehicles (SUVs and pickup trucks).

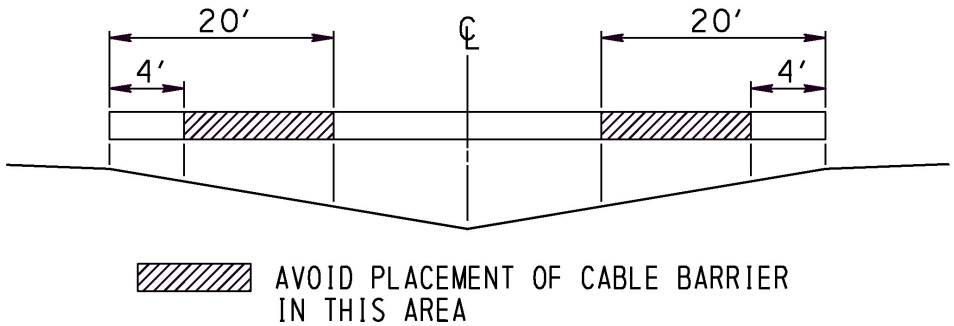

FIGURE 12.14
OVERRIDE CRITERIA FOR HIGH-TENSION CABLE BARRIER IN V-SHAPED MEDIANS

(3) Symmetric Flat-Bottom Medians. As shown in Figure 12.15, symmetric flat-bottom medians should not have high-tension cable barrier placed from 0 ft to 8 ft on either side from the flat-bottom break point. This guidance for placement is intended to minimize risk of underrides of small and midsize vehicles.

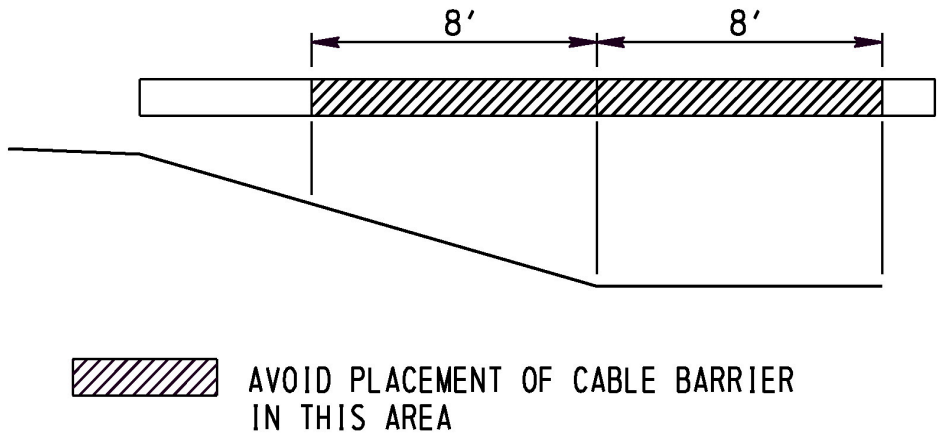

FIGURE 12.15
UNDERRIDE CRITERIA FOR HIGH-TENSION CABLE BARRIER FOR FLAT-BOTTOM MEDIANS

As shown in Figure 12.16, high-tension cable barrier should not be placed between 4 ft and 20 ft from the break (or hinge) point. This guidance for placement is intended to minimize risk of overrides of larger vehicles (SUVs and pickup trucks).

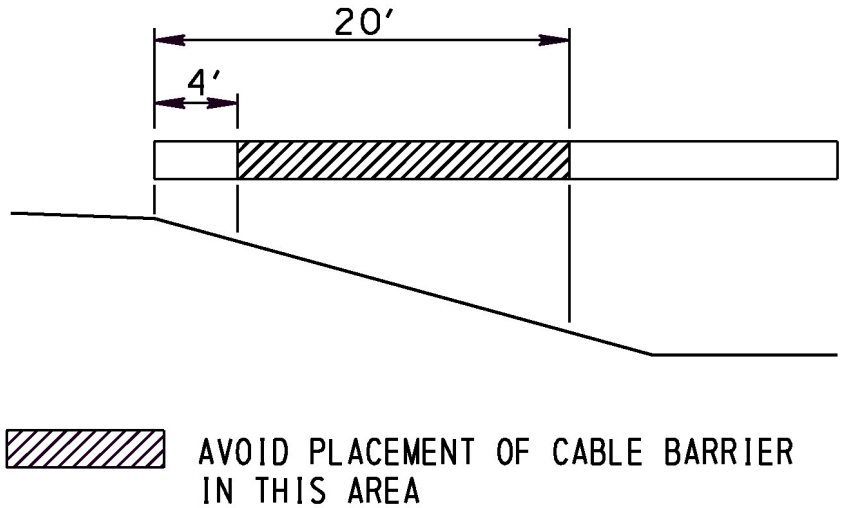

FIGURE 12.16
OVERRIDE CRITERIA FOR HIGH-TENSION CABLE BARRIER FOR FLAT-BOTTOM MEDIANS

(4) Non-Symmetrical Medians. The guidelines for V-shaped and flat-bottom medians should be followed to minimize risk of vehicle underrides or overrides.

(5) Superelevations. For roads with superelevation steeper than 3%, the barrier should be placed not farther than 2 ft from the break point for the shoulder when the cross slope is steeper than 1V:6H, and not farther than 5 ft when the cross slope is 1V:6H or flatter.

c. Determining on Which Side of the Median the High-Tension Cable Barrier Should Be Placed. All of the following principles must be used in determining the placement:

(1) In non-symmetrical medians, it is preferable to place the high-tension cable barrier on the side of the median with the flatter cross slope.

(2) High-tension cable barrier should typically be placed on the opposite side of the median from where roadway departures are more likely to occur. This will give the errant vehicle more room to either recover or slow down through the ditch before hitting the high-tension cable barrier.

(3) For horizontal curves, place the high-tension cable barrier on the inside of the outside roadway (refer to Section 12.6.D.5.f). This decreases the likelihood of the high-tension cable barrier being hit. The reason this placement is preferable is that when a curved high-tension cable barrier is hit from the convex side (the outside), the tension in the barrier immediately decreases as cables are separated from the line post, resulting in deflection distances in excess of the barrier's design deflection.

(4) Where one roadway is higher than the other, the high-tension cable barrier should preferably be placed adjacent to the higher roadway.

(5) Superelevations. The barrier should preferably be placed on the opposite side of the median (away from the high side of the superelevation).

d. Overlap of Two High-Tension Cable Barrier Systems. If a continuously effective median barrier is to be maintained, overlap is to be provided for separate runs of high-tension cable barrier systems on either side of a median. Overlap is needed to reduce the risk of cross-median departures at that location.

(1) Near Side to Far Side. Figure 12.17 shows an overlap of two high-tensions cable barrier systems (near side to far side).

INTENTIONALLY BLANK

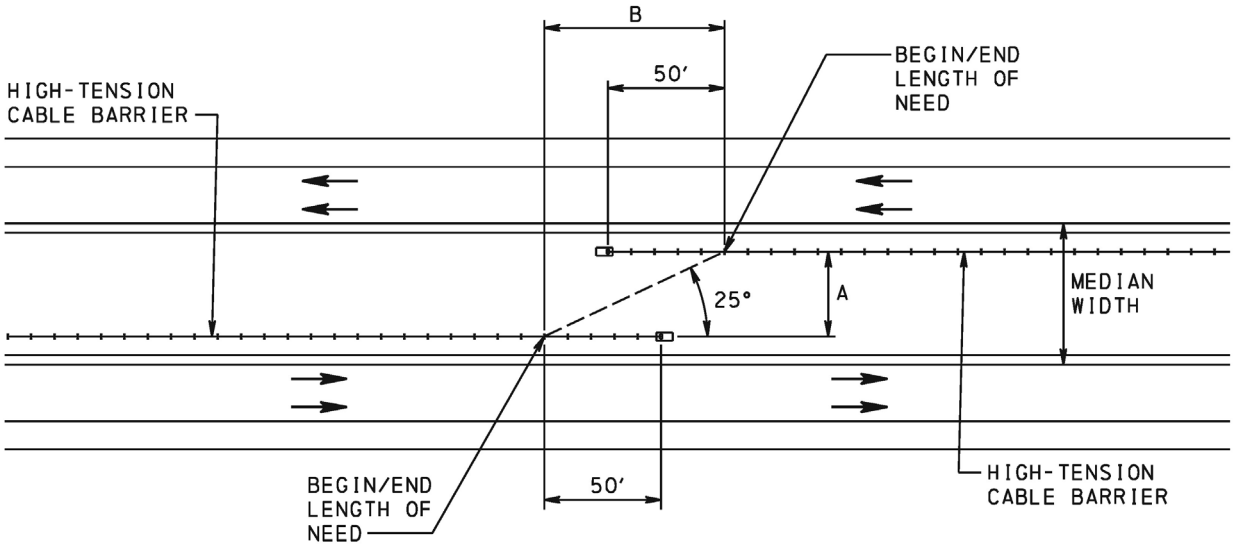

FIGURE 12.17
OVERLAP OF TWO HIGH-TENSION CABLE BARRIER SYSTEMS
(NEAR SIDE TO FAR SIDE)

The length for overlap of two high-tension cable barrier systems (near side to far side) is determined by excluding the length of the high-tension cable barrier that is gating and by knowing the offset (lateral distance) between runs of high-tension cable barrier. For this discussion, it is assumed that: (1) the gating length is 50 ft from the end anchor terminal to the point of beginning/ending length of need; and (2) a vehicle hits the near side of the high-tension cable barrier at an impact angle of 25° (MASH 2016 criterion). The length for overlap of installations may be computed using the following equation:

$$\tan 25° = A/B$$

Solving for B, the equation becomes:

$$B = A/\tan 25° = 2A$$

where: B = length between the beginning/ending of lengths of need (ft)
A = lateral distance between runs of high-tension cable barrier (ft)

For example, an overlap of two high-tension cable barrier runs (near side to far side) is to be installed. The median width is 60 ft, and the lateral distance (A) between the two high-tension cable barrier runs is 36 ft (i.e., each run is offset 12 ft from the edge of traveled way). The length between the beginning/ending of the lengths of need (B) is:

$$B = 2A = 2(36) = 72 \text{ ft}$$

As the value for the lateral distance (A) decreases, the length between the beginning/ending lengths of need (B) also decreases. For instance, an overlap of high-tension cable barrier runs (near side to far side) is to be installed. The median width is 36 ft, and the lateral distance (A) between the two high-tension cable barrier runs is 16 ft (i.e., each run is offset 10 ft from the edge of traveled way). The length between the beginning/ending of the lengths of need (B) is:

$$B = 2A = 2(16) = 32 \text{ ft}$$

(2) Far Side to Near Side. Figure 12.18 shows a proposed installation of high-tension cable barrier on the far side of the median that switches to the near side.

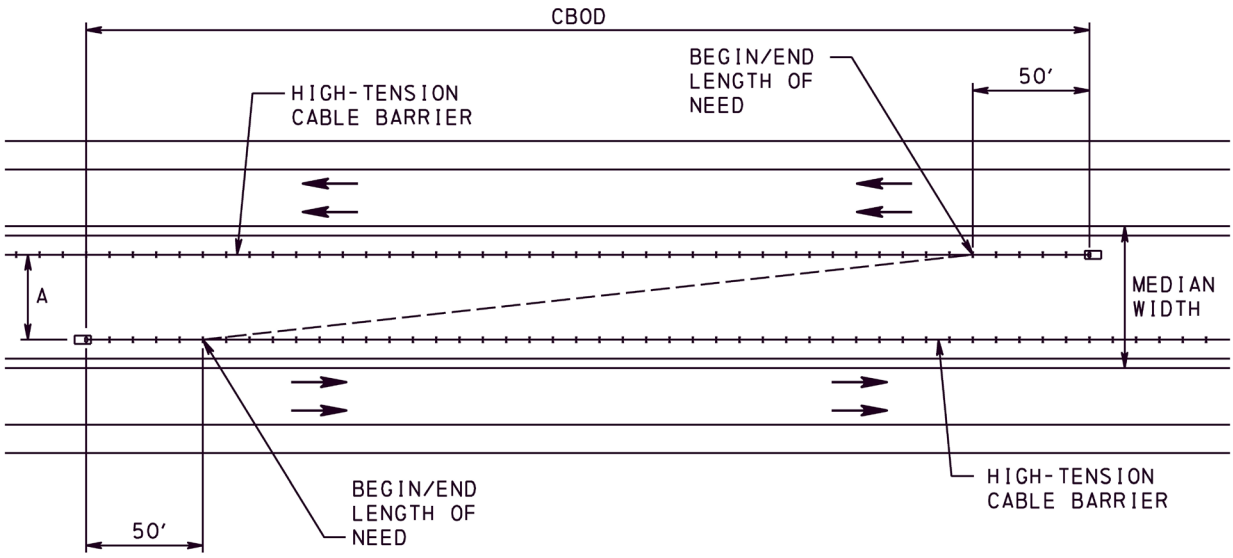

FIGURE 12.18
OVERLAP OF TWO HIGH-TENSION CABLE BARRIER SYSTEMS
(FAR SIDE TO NEAR SIDE)

The length for overlap of two high-tension cable barrier systems (far side to near side) is to be determined by assuming a worst case, cable barrier overlap distance (CBOD). This calculation: (1) excludes a portion of the length of the near side high-tension cable barrier that is gating; (2) excludes all of the length of the far side high-tension cable barrier that is gating; and (3) multiplies the value for lateral distance (A) between runs of high-tension cable barrier by a factor of 10. The equation is based on a worst-case departure angle of approximately 10:1 (5.6°). The equation to compute CBOD is:

$$CBOD = 10A + 50 + 50$$

where: CBOD = cable barrier overlap distance (ft)
A = lateral distance between runs of high-tension cable barrier (ft)

The maximum value for CBOD is limited to 400 ft.

The gating lengths are not known for high-tension cable barrier systems. Therefore, conservative lengths of 50 ft are being used. The actual gating distance is different, depending on from which direction a high-tension cable barrier system is hit.

For example, an overlap of high-tension cable barrier runs is to be installed (far side to near side). The median width is 60 ft, and the lateral distance (A) between the two high-tension cable barrier runs is 36 ft (i.e., each run is offset 12 ft from the edge of traveled way). The cable barrier overlap distance (CBOD) is:

$$CBOD = 10A + 50 + 50 = 10(36) + 50 + 50 = 460 \text{ ft; say } 400 \text{ ft}$$

As the value for the lateral distance (A) decreases, the cable barrier overlap distance (CBOD) also decreases. For instance, an overlap of two high-tension cable barrier runs (far side to near side) is to be installed. The median width is 36 ft, and the lateral distance (A) between the two high-tension cable barrier runs is 16 ft (i.e., each run is offset 10 ft from the edge of traveled way). The cable barrier overlap distance (CBOD) is:

$$CBOD = 10A + 50 + 50 = 10(16) + 50 + 50 = 260 \text{ ft}$$

e. End Anchor Terminal Placement. End anchor terminals perform a critical function for high-tension cable barrier; they keep the cables in tension before, during, and after vehicular impacts. The contractor and manufacturer typically design and size the end anchor terminal for prevailing soil conditions. End anchor terminals are to be installed on cross slopes of 1V:10H or flatter. The locations of the end anchor terminals should be shown in the PS&E package, based on coordination with the District Traffic, Maintenance, and Construction Units, and involvement with FHWA for Federal Oversight projects.

(1) Placement.

(a) Protecting End Anchors. End anchor terminals should be located in areas least likely to be hit because if the end anchor is hit, then the whole system is usually disabled. End anchor terminals are evaluated through crash testing and are considered to be crashworthy.

However, when conditions permit, protect the end anchor terminals by placing them behind another barrier. These situations include guide rail at bridge ends, as shown in Figure 12.19. Place cable median barrier end anchorage beyond the structure backfill zone and outside of ground disturbed during the construction process, when feasible. Typically, a 25 ft to 30 ft setback distance from a structure is adequate.

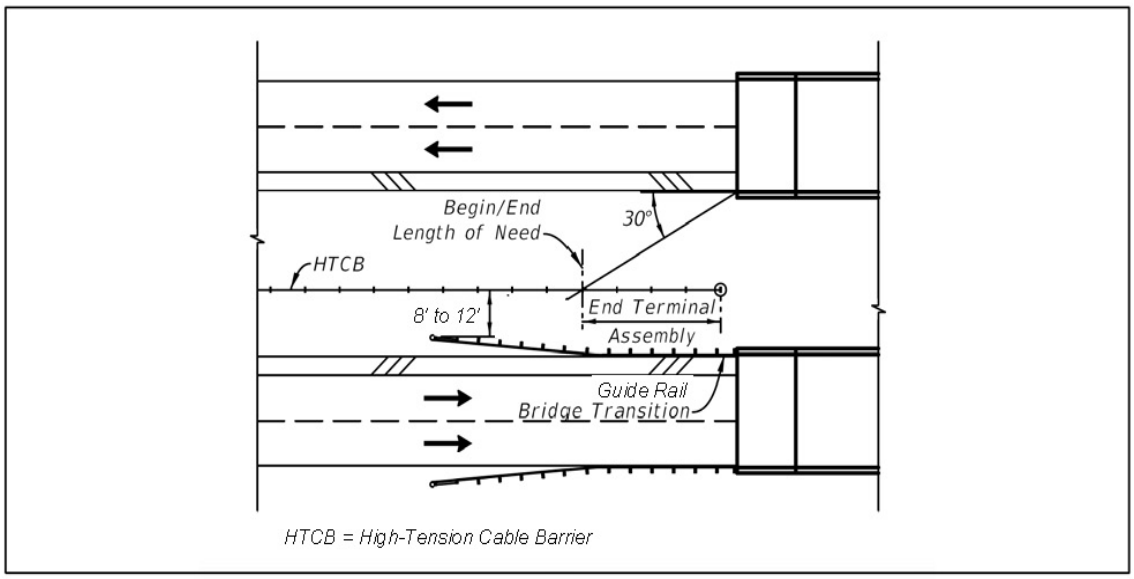

FIGURE 12.19
EXAMPLE OF END TERMINAL SHIELDING
FOR HIGH-TENSION CABLE BARRIER (BRIDGE END)

Installing other barriers for the sole purpose of protecting end anchor terminals is not required.

(b) Overlap. At locations where the high-tension cable barrier switches from one side of the median to the other, the end anchor terminals should be overlapped, if possible. Refer to Figure 12.17 and Figure 12.18 for examples.

(c) Length Between End Anchors. A run of high-tension cable barrier should preferably be limited to 1 mi but must not be longer than 1.5 mi or as needed for emergency crossovers. Longer runs may lead to higher lateral deflections of the system. Also, limiting the length of individual barrier runs prevents long sections of barrier from being disabled if an end terminal is struck by a vehicle and the cable loses tension.

Since end anchor terminals can be expensive, a high-tension cable run should preferably not have less than 1,100 ft between end anchor terminals.

If two systems are not overlapped, there may be a gap between end anchors where vehicles could traverse a median. Therefore, the number of end anchors should be minimized.

Runs of shorter and longer lengths between end anchor terminals may be appropriate in specific locations, and each run should be determined to meet the field situations, such as the location of bridges, steep cross slopes, and other features that conflict with the system performance.

(d) Soil Conditions. End anchor terminals should not be placed in wet soil conditions, if practical.

(e) Median Crossovers. Placement of high-tension cable barrier must consider the needs for turnarounds, crossovers, and access points to accommodate emergencies, enforcement, and maintenance operations. Refer to Chapter 2, Section 2.18.U for guidance to locate median crossovers on Interstate and Non-Interstate Freeways when the median width is greater than 33 ft.

Median crossover locations should be selected such that the risk of a crossover of an errant vehicle is minimized because overlaps as shown in Figures 12.17 and 12.18 can typically not be provided, and therefore the opening and the gating portions of the high-tension cable barrier system do not reduce the risk of cross-median departures at that location. A near side to far side configuration at median crossover locations is preferable to minimize the length along the highway of possible cross-median departures. However, continuation of high-tension cable barrier on the same side of the median or a far side to near side configuration is also acceptable.

For crossovers at narrow medians, the length along the highway for possible cross-median departures greatly increases. Therefore, a risk-based assessment should be made based on Average Daily Traffic (ADT), crash history and median width to determine if the crossover is truly needed. If there is a need for a narrow median crossover, a near side to far side configuration may not be possible due to the shoulder width needed for deceleration of emergency vehicles. In that case, the configuration as shown in Figure 12.20 may be used.

INTENTIONALLY BLANK

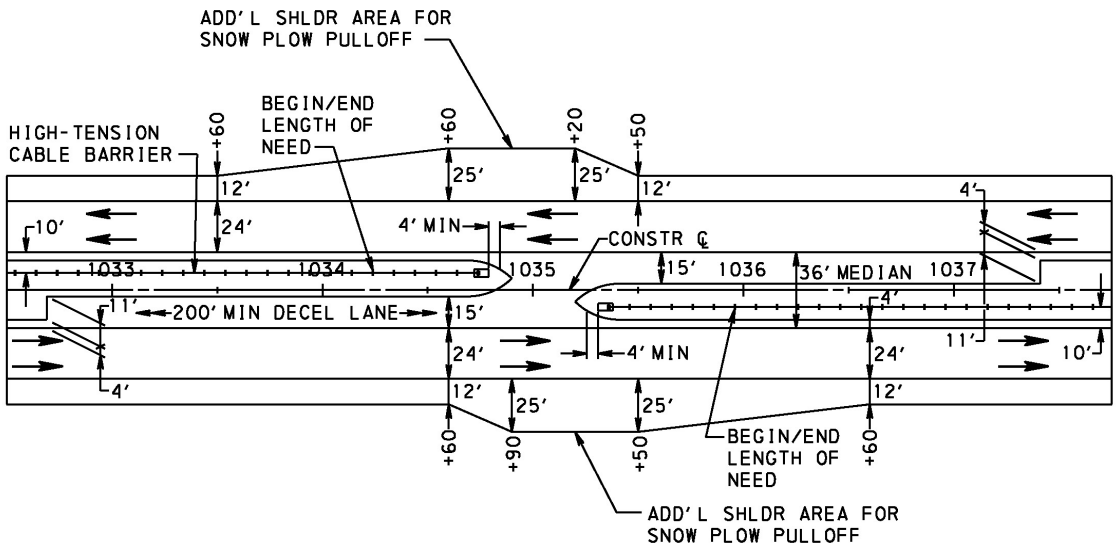

FIGURE 12.20
EXAMPLE OF NARROW MEDIAN CROSSOVER
FOR HIGH-TENSION CABLE BARRIER

In addition to the narrow median crossover, Figure 12.20 depicts additional outside shoulder areas that would be needed to accommodate the turning movements of snow plow trucks from the Department's maintenance forces. Specifically, snow plow trucks would: (1) decelerate in advance of the median crossover; (2) turnaround through the median crossover and across the opposing travel lanes; and (3) pulloff temporarily into the additional shoulder area.

For all median crossovers, it is recommended that the foundation for an end anchor terminal be constructed with a minimum offset of 4 ft from the edge of the paved / stabilized way for the median crossover. Indicate the dimension for the offset on the Construction Plan between the foundation for the end anchor terminal and the edge of the paved /stabilized way for the median crossover.

f. Placement Along Horizontal Curves. Placement of high-tension cable barriers on the convex side (i.e., inside of the curve relative to traffic), as shown in Figure 12.21, is recommended for the following reasons:

- Road departures are more common to the outside (concave side) of horizontal curves. Therefore, it allows more vehicles the maximum median space for recovery and vehicle speed reduction before hitting the barrier.

- The use of high-tension cable barrier along a curved section of the roadway can exert significant lateral pressure on the support posts and may cause them to bend over time. The convex side of the median will have a larger radius, which minimizes this lateral pressure.

- Impacts on the convex side of a curved high-tension cable barrier will result in larger deflections. With the increased deflection, the chance for loss of engagement is greater when the posts are damaged.

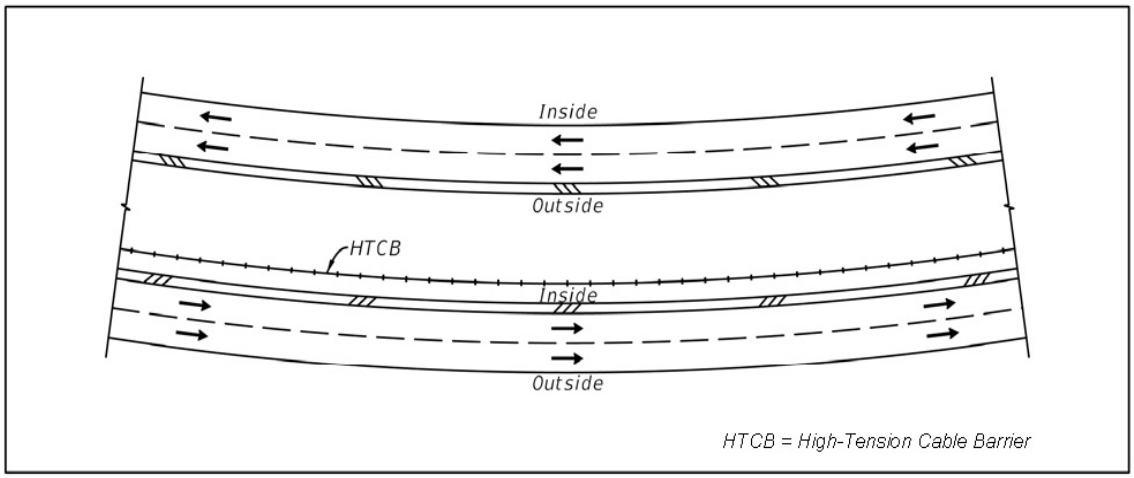

FIGURE 12.21
HORIZONTAL CURVE PLACEMENT
FOR HIGH-TENSION CABLE BARRIER

Also, decreased line post spacing is effective in reducing the lateral load and deflection, and should be considered within horizontal curves having a radius less than 1,300 ft. However, post spacing less than 7 ft should be avoided along horizontal curves, as lower post spacings have shown excessive damage to vehicles.

Furthermore, high-tension cable barrier may not be suitable for horizontal curves with a radius of 1,300 ft or less when a vehicle can impact the convex side of the high-tension cable barrier. For curve installations that cannot have an impact on the convex side, the minimum radius to install high-tension cable barrier is 500 ft. Radii that are less than 500 ft, or less than the manufacturer's recommendation, should use a different barrier system.

For narrower medians, it may be appropriate to consider the use of two high-tension cable barriers (one on each side of the median) or a more rigid barrier. If two closely spaced high-tension cable barriers are considered, evaluate its effects on the Department's ability or inability to complete maintenance and mowing activities.

g. Placement Along Vertical Curves. Where high-tension cable barrier is installed in crest vertical curves, sag vertical curves, and low spots, upward and/or downward forces may be exerted between the cable, posts, post foundations, and sockets. Posts installed in low spots tend to move up due to cable tension and posts at higher locations. These forces could also pull the posts out of the sockets / post foundations or pull the cables off the posts. The result would be less cable tension and cables at the incorrect height in relation to the finished ground line. Ultimately, these effects adversely affect crash performance.

Suggested guidelines for high-tension cable barrier, when placed on vertical curves, are as follows:

- End anchor terminals of the high-tension cable barrier should be placed as close as practical to the bottom and top points of the vertical curvature.

- End anchor terminals should be placed at points where there is a sudden change in vertical slope.

- Post spacing should be reduced in sharp vertical curves.

- Regrading short sections of the median that have sharp vertical curvatures should be considered.

- Regular checks should be performed at the bottom and top of vertical curves to ensure that the cables have not moved up or down from their specified heights.

- Placement of cable barrier systems on sag vertical curves should be avoided with a "K-value" less than 100. The equation to calculate K is:

$$K = L/A$$

where: K = length of vertical curve per percent change in A
L = length of vertical curve (ft)
A = algebraic difference in grades (percent)

h. Mow Strips. A mow strip is a narrow piece of asphalt or concrete pavement that may be placed directly beneath a high-tension cable barrier. Mow strips are optional. One intent of mow strips is to prevent the growth of vegetation and to eliminate the need for mowing around the posts, which lowers maintenance costs. A mow strip also provides a more constant ground level (which improves cable performance) and reduces erosion.

The thickness and width of a mow strip may vary based on project conditions. Mow strips typically have a minimum width of 4 ft and a thickness of 4 in.

There may be locations where a graded shoulder may result between the mow strip and an existing paved shoulder. In these situations, consider construction of the following: (1) excavate the graded shoulder to a depth of 4 in; (2) place Geotextile, Class 4, Type A on top of the exposed subgrade; (3) install Subbase (No. 2A) with a depth of 4 in on top of the geotextile; and (4) apply a layer of asphalt prime coat on top of the subbase.

Limitations of paving equipment may make it difficult to install asphalt mow strips on cross slopes of 1V:12H or steeper, particularly on softer ground.

Construction of concrete mow strips may be more efficient than construction of asphalt mow strips if the concrete is placed for both the mow strip and the line post foundations at the same time. Both concrete mow strips and asphalt mow strips are allowed; it would be up to the designer to decide what materials are to be specified for the mow strip.

i. PS&E Packages. Plan and specification requirements for high-tension cable barrier systems are to be included in PS&E packages.

For stand-alone high-tension cable barrier projects, the Construction Plan, at a minimum, should include the following information:

- Site Location Map
- General Notes
- Tabulation of Overall Lengths and Construction Lengths
- Typical Sections
    - Minimum / maximum cross slopes
    - Lateral offsets from existing paved shoulder and existing travel lanes
    - Mow strip details (if applicable)
- Summary Sheets
- Tabulation of Quantities

- Plan Sheets

  - End anchor terminal locations
  - Lateral offsets to any other barriers / obstructions
  - Lateral distance (offsets) in areas of overlaps
  - Known potential conflicts with underground features
  - Geometry at crossovers including offset from end anchor terminal foundation to paved / stabilized way
  - Any sections of cable which have a known need for reduced post spacing, including the station limits and/or dimensions.
  - Any flare rates to avoid existing barriers and for deceleration lanes of median crossovers
  - Delineation is required on the side closest to traffic. Delineation is also required on the other side if the cable barrier is within the clear zone of traffic on the other side. Indicate on plan which sections will need delineation on both sides of the barrier.

For bidding purposes, the Construction Plan is to indicate the specific locations (by stations or by segments and offsets) and the lengths where reduced post spacing is required for high-tension cable barrier.

For stand-alone high-tension cable barrier projects, a note should be added on the Construction Plan for any known potential conflicts with underground features such as pipes, ductwork for lighting and Intelligent Transportation System (ITS) facilities, etc.

j. Traffic Control. Long-term measures are preferred for work zone traffic control (e.g., lane closure) to facilitate construction of high-tension cable barrier systems. Short-term measures for work zone traffic control are to be avoided that involve daily set-ups and removal. For additional guidance, refer to Publication 46, *Traffic Engineering Manual* and Publication 213, *Temporary Traffic Control Guidelines*.

Table 12.11 presents a summary of selected design/location guidelines for high-tension cable barrier systems.

E. Gate Barrier Systems. An emergency opening may be needed, for example, to route traffic around a crash that requires the roadway to be temporarily closed. Proprietary devices have been developed and tested that can be used to provide a temporary opening in conjunction with a concrete safety-shaped median barrier. These gate barrier systems include:

- The BarrierGate
- The ArmorGuard Gate
- The Vulcan Gate

Refer to Chapter 12, Appendix B for a description of the gate barrier systems listed above.

INTENTIONALLY BLANK

TABLE 12.11
DESIGN/LOCATION GUIDELINES
FOR HIGH-TENSION CABLE BARRIER SYSTEMS

FEATURE	GUIDELINE
Cable Barriers (Crash Requirements) • MASH (2009 or 2016) (cross slope of 1V:10H or flatter) • MASH (2009 or 2016) (cross slope steeper than 1V:10H but no steeper than 1V:4H)	• Test Level 4 (TL-4) (minimum) • Test Level 3 (TL-3) (minimum)
End Anchor Terminals (Crash Requirements) • MASH 2016	• Test Level 3 (TL-3) (minimum)
Number of Cables	• 4 cables or more (minimum)
Post Spacing • MASH	• 18 ft (maximum) see Section 12.6.D.3
Deflection (maximum dynamic deflection distance / working width)* • MASH, TL-4 (cross slope of 1V:10H or flatter) • MASH, TL-3 (cross slope of 1V:4H to 1V:10H)	• 10 ft (Basis: 2270P (pickup truck)) on level terrain • Deflection should not encroach into opposing travel lanes. • Deflection can increase on horizontal curves or for the system length.
Distance Between End Anchor Terminals	• 1,100 ft (minimum recommended) • 1.5 mi (maximum) • 1.0 mi (preferable)
End Anchor Terminal Placement	• Cross slopes 1V:10H or flatter • Preferably in areas least likely to be hit. • Avoid areas with saturated soils.
System Placement (Lateral Placement)	• A flatter cross slope is preferable, but no steeper than 1V:4H • 8 ft or more away from the median ditch • Avoid placement 4 ft to 20 ft away from hinge point • Place on high side of median • Place on outside of horizontal curves • For superelevation steeper than 3% see Section 12.6.D.5.b.(5)
Offset to Other Barriers	Recommended offset from one high-tension cable barrier to another high-tension cable barrier, concrete barrier, or guide rail. • 8 ft to 12 ft (preferable)

*The minimum unobstructed distances are to be designed for Test Level 3 conditions, even if a Test Level 4 system is used. Unobstructed distances for MASH, Test Level 4 are recommended, not required.

12.7 CONCRETE MEDIAN BARRIER

Concrete median barriers are the most common rigid barriers used by the Department for permanent roadway installations. For a vehicular impact at a given Test Level, the designs of concrete median barriers aim to:

- Contain and redirect the vehicle, with the vehicle not penetrating, underriding, or overriding the installation. [Structural strength]
- Prevent impact velocities that deform occupant compartment, and ensure detached elements from the barrier system do not penetrate the occupant compartment. [Occupant safety]
- Ensure that vehicle remains upright during and after the crash to reduce potential of the vehicle to have a secondary collision with other vehicles; and keep roll and pitch angles below 75°. [Occupant safety]

Refer to Table 12.3 for the various Test Levels.

The Department's offerings for concrete median barriers are shown in Publication 72M, *Roadway Construction Standards,* Drawing RC-57M (Concrete Median Barrier). Designs for these concrete median barriers vary in shape, construction type, and reinforcement. Table 12.12 below lists the Department's concrete median barriers for permanent roadway installations.

TABLE 12.12
CONCRETE MEDIAN BARRIERS FOR PERMANENT ROADWAY INSTALLATIONS

STANDARD DRAWING REFERENCE	SHAPE	HEIGHT	CONSTRUCTION TYPE	MINIMUM SEGMENT LENGTH*	MAXIMUM SEGMENT LENGTH*	MINIMUM INSTALLATION LENGTHS	MASH TEST LEVEL
RC-57M	F-Shape	32"	Precast	12'-0"	30'-0"	100'-0"**	TL-3
			Cast-in-Place/ Slip-Formed	35'-0"	90'-0"	35'-0"	TL-3
		42"	Precast	12'-0"	30'-0"	100'-0"**	TL-4
			Cast-in-Place/ Slip-Formed	50'-0"	90'-0"	50'-0"	TL-4
		50"	Precast	12'-0"	30'-0"	100'-0"**	TL-4
			Cast-in-Place/ Slip-Formed	60'-0"	90'-0"	60'-0"	TL-4
	Single Slope	42"	Cast-in-Place/ Slip-Formed	40'-0"	90'-0"	40'-0"	TL-4

*Length between segments or expansion joints.
**Minimum barrier installation length for freestanding barrier. A freestanding barrier is defined here as a barrier which the ends are not anchored or attached to another barrier or fixed object.

The Department's three permanent F-shape concrete median barriers have heights of 32 in, 42 in, and 50 in above the pavement surface. This includes a provision for a future pavement overlay of up to 3 in to the break point between the top of the vertical face and the slope.

The Department's permanent single slope concrete median barrier has a height of 42 in above the pavement surface and is typically embedded 2 in below the pavement surface. This includes a provision for a future pavement overlay of up to 6 in (i.e., minimum height of 36 in above the pavement surface).

When F-shape concrete median barriers are to be provided for permanent roadway installations:

- Specify the Department's standard of 42 in high F-shape concrete median barrier. This barrier provides crashworthiness at a higher test level (TL-4) than the 32 in high F-shape concrete median barrier (TL-3).
- Specify the 50 in high F-shape concrete median barrier where improved night visibility is needed to reduce or eliminate glare from opposing headlights.

- Consider specifying the 32 in high F-shape concrete median barrier on curves where a 42 in or 50 in high F-shape concrete median barrier may reduce the sight distance to less than the minimum required stopping sight distance. (Note: Use of the 32 in high barrier to satisfy stopping sight distance may need to be weighed against other factors such as: (1) glare from opposing headlights over the 32 in high barrier; and (2) the possibility of a larger vehicle impacting the 32 in high barrier and overturning (e.g., buses, single-unit trucks, tractor-trailers). At locations where: (1) a concrete median barrier is installed and (2) the sight distance is reduced to less than the minimum required stopping sight distance, a design exception request must be prepared with full justification provided for the retention, limited improvement, and mitigation of this condition. Refer to Publication 10X, Design Manual Part 1X, *Appendices to Design Manuals 1, 1A, 1B, and 1C*, Appendix P, Design Exceptions.)

- Normal use of precast F-shape concrete median barrier, with 12 ft, 0 in minimum lengths, is restricted to curves with radii ≥ 450 ft. (Precast F-shape concrete median barrier with lengths < 12 ft, 0 in are not permitted.)

- Specify cast-in-place F-shape concrete median barrier along curves with radii < 450 ft.

The Department has developed standard details for various combinations of concrete median barrier transitions. These standard details are shown in Publication 72M, *Roadway Construction Standards*. Drawing RC-55M depicts concrete median barrier transitions from roadway barrier to roadway barrier. Drawing RC-56M shows concrete median barrier transitions from roadway barrier to bridge barrier.

Drawings RC-55M and RC-56M depict how the concrete median barrier transitions vary in height, width, length, reinforcement, and construction method (precast or cast-in-place). These concrete median barrier transitions were evaluated against MASH criteria and assigned the following test levels: (1) MASH Test Level 3 for a transition with any of its height < 36 in above the pavement surface; and (2) MASH Test Level 4 for a transition with all of its height ≥ 36 in above the pavement surface.

When the designer includes F-shape concrete median barrier in the PS&E package, the contractor may choose either precast or cast-in-place. When a roadway-to-roadway, F-shape, concrete median barrier transition is proposed (Drawing RC-55M), an alternate design for both cast-in-place and precast transitions is to be included in the PS&E package. An alternate design is required because the lengths of precast concrete median barrier transitions (12 ft) are shorter than the lengths of cast-in-place concrete median barrier transitions (50 ft or 60 ft).

For example, Figure 12.22 shows an elevation view of proposed concrete median barrier, F-shape to be installed over a length of 2,400 ft. Going station ahead, proposed construction would be as follows:

- Concrete Median Barrier, F-Shape (height = 50 in; length = 1,600 ft)
- Transition, Concrete Median Barrier, F-Shape (height varies from 50 in to 42 in)
- Concrete Median Barrier, F-Shape (height = 42 in)

In this example, the length of 42-in high, F-shape concrete median barrier depends on what one of two alternates (i.e., construction methods) the contractor decides to build. As depicted in Figure 12.22:

- If Alternate 1 is selected (cast-in-place transition, 60 ft length), then the length of 42-in high, F-shape concrete median barrier would be 740 ft.

- If Alternate 2 is selected (precast transition, 12 ft length), then the length of 42-in high, F-shape concrete median barrier would be 788 ft.

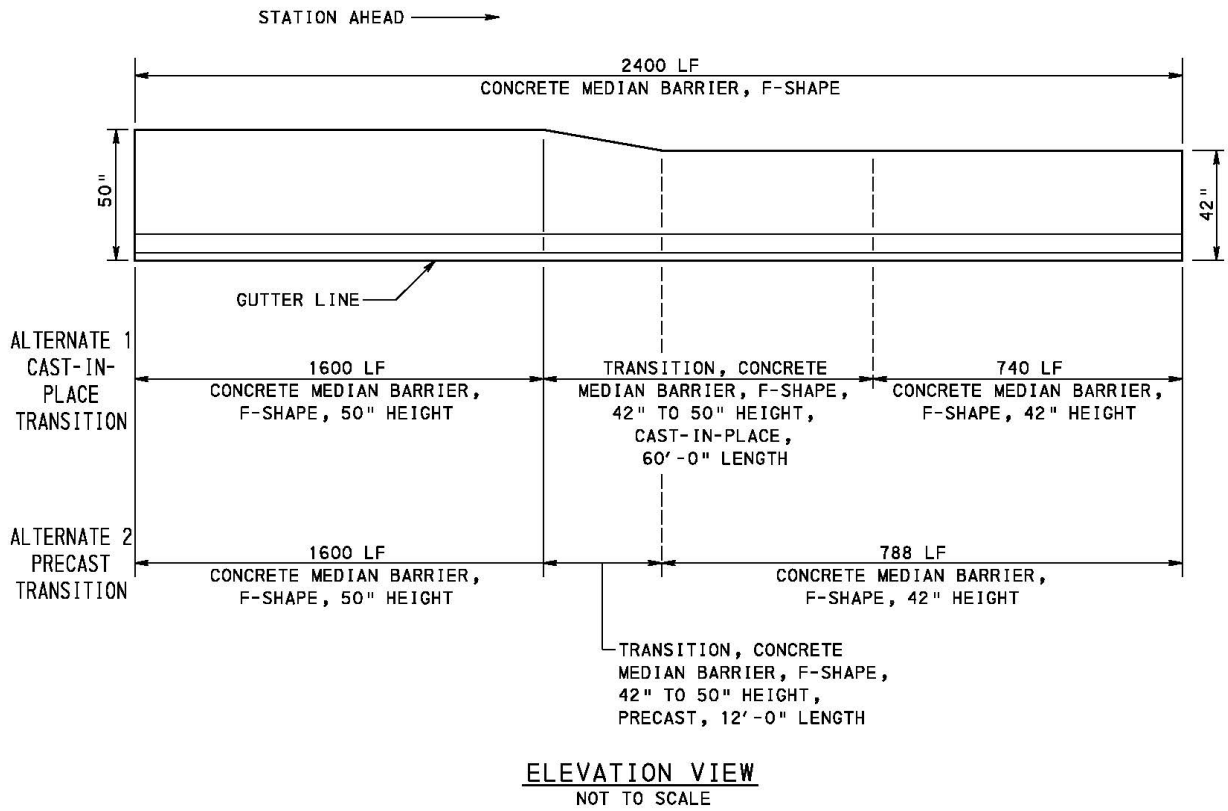

FIGURE 12.22
EXAMPLE OF ELEVATION VIEW WITH ALTERNATE DESIGN FOR CONCRETE MEDIAN BARRIER TRANSITION

INTENTIONALLY BLANK

12.8 SINGLE FACE CONCRETE BARRIER

A. General Considerations. Single face concrete barrier represents a rigid longitudinal barrier system used by the Department for permanent roadway installations. Single face concrete barrier is used for protecting piers, abutments, sound barriers, and other roadside obstructions, and for supporting an embankment behind it (with geotechnical evaluation, see Section 12.8.B). When sound barriers are to be protected by concrete barriers, refer to Publication 15M, Design Manual Part 4, *Structures*.

Single face concrete barrier may be considered as a roadside (shoulder) barrier on projects in the following situations:

- Where the minimum unobstructed distance (see Table 12.4) behind the guide rail is not available.
- Protect vehicles from colliding with fixed objects near inside and outside shoulders (e.g., rough rock cut slopes, bridge abutments, bridge piers, sound barriers).
- Reduce right-of-way area / environmental impacts behind the single face concrete barrier that are typically associated with grading requirements (e.g., cut sections).
- Transition from one rigid barrier system (e.g., F-shape single face concrete barrier) to another rigid barrier system (e.g., F-shape concrete bridge barrier).

The designs of single face concrete barriers aim to satisfy the performance requirements for longitudinal barriers as discussed in Section 12.4.A.

PennDOT's two permanent single face concrete barriers (F-shape) have heights of 32 in and 42 in above the pavement surface. This includes a provision for a future pavement overlay of up to 3 in to the break point between the top of the vertical face and the slope.

Single face concrete barriers for permanent roadway installations, both with fill and without fill, are shown in Publication 72M, *Roadway Construction Standards,* Drawing RC-58M. These barriers are also summarized in Table 12.13. Precast single face concrete barriers may only be used with fill.

TABLE 12.13
SINGLE FACE CONCRETE BARRIERS (F-SHAPE)
FOR PERMANENT ROADWAY INSTALLATIONS

STANDARD DRAWING REFERENCE	HEIGHT	CONSTRUCTION TYPE	SUPPORT BEHIND BARRIER	MINIMUM SEGMENT LENGTH*	MAXIMUM SEGMENT LENGTH*	MINIMUM INSTALLATION LENGTHS	MASH TEST LEVEL
RC-58M	42"	Cast-in-Place/ Slip-Formed	With Fill	12' - 0"	90' - 0"	36' - 0"	TL-4
			Without Fill	61' - 6"	90' - 0"	61' - 6"	TL-4
		Precast	With Fill	12' - 0"	30' - 0"	36' - 0"	TL-4
	32"	Cast-in-Place/ Slip-Formed	With Fill	12' - 0"	90' - 0"	36' - 0"	TL-3
			Without Fill	45' - 0"	90' - 0"	45' - 0"	TL-3
		Precast	With Fill	12' - 0"	30' - 0"	36' - 0"	TL-3

*Length between segments or expansion joints

The minimum and maximum segment lengths of single face concrete barriers are indicated in Table 12.13. The installation length may consist of several segments. The minimum and maximum segment lengths vary:

- Because of the construction type (cast-in-place/slip-formed or precast) and
- Whether fill or no fill is present behind the barrier to support it.

Single face concrete barrier is not to be used for temporary situations. Refer to Section 12.10 for temporary barriers.

Single face concrete barrier without fill, and with a minimum length less than what is indicated in Table 12.13, may be used if it is part of a moment slab. Design details for moment slabs are to be shown in the project plans following the guidance and details in:

- Publication 72M, *Roadway Construction Standards,* Drawing RC-58M;
- Publication 218M, *Standards for Bridge Design*, BD-627M; and
- Publication 15M, Design Manual Part 4, *Structures*.

When permanent single face concrete barriers are used:

- Specify the standard of 42 in high single face concrete barrier when crashworthiness at a higher test level (TL-4) is desired. A single face concrete barrier at TL-4 is typically needed for piers, abutments, and sound barriers. A single face concrete barrier at TL-4 should be considered for freeways and for other roads with a high truck ADT.

- Consider specifying the 32 in high single face concrete barrier on curves where a 42 in high single face concrete barrier may reduce the sight distance to less than the minimum required stopping sight distance. The increased sight distance needs to be weighed against the lower MASH test level (TL-3). At locations where a single face concrete barrier is installed and the sight distance is reduced to less than the minimum required stopping sight distance, a design exception request must be prepared with full justification provided for the retention, incremental improvements, and mitigation of this condition. Refer to Publication 10X, Design Manual Part 1X, *Appendices to Design Manuals 1, 1A, 1B, and 1C*, Appendix P, Design Exceptions.

- Normal use of precast F-shape single face concrete barrier, with 12 ft lengths, is restricted to curves with radii ≥ 490 ft. If barrier lengths are > 12 ft, then the radii must be even greater. (Note: Precast F-shape single face concrete barrier with lengths < 12 ft is not permitted.)

- Specify cast-in-place single face concrete barrier along curves with radii < 490 ft.

B. Typical Treatments Behind Barrier. Typical treatments behind single face concrete barrier are shown in Drawing RC-58M for the following conditions:

- Barrier with fill
- Barrier without fill (adjacent to fill or cut slope)
- Barrier (with fill) adjacent to rough rock
- Barrier (with fill) adjacent to structure
- Pay limits of barrier with and without fill

Placement of fill behind single face concrete barrier may also include preformed fabric filter drain as shown in Drawing RC-58M.

For the typical treatment of barrier with fill, a geotechnical analysis is needed if more embankment needs to be supported behind the barrier than what is shown in Drawing RC-58M. Some examples would include:

- Slope above the top of barrier that is steeper than the maximum of 1V:2H (e.g., 1V:1.75H, 1V:1.5H).

- Top width of No. 57 Coarse Aggregate that has a width < 1 ft, 0 in.

- Values for Dimension "A" that are less than what is shown (e.g., < 6 in for the 42-in F-shape single face concrete barrier with a 1V:2H maximum slope of ground line).

If a proposed design for barrier with fill does not conform with Drawing RC-58M:

- A project-specific special detail is needed.
- A geotechnical analysis is needed to justify the proposed construction in the special detail.

For geotechnical-related requirements and guidance, refer to Publication 293, *Geotechnical Engineering Manual*.

Where a single face concrete barrier is without fill and is adjacent to a fill slope, evaluate all locations for constructability. For example, suppose a continuous single face concrete barrier was proposed to be built along the roadway up to an adjacent bridge. Considerations for constructability may include the following:

- A single face concrete barrier does not typically have a direct, solid connection between it and the adjacent rigid bridge barrier or rigid bridge approach slab with moment slab.

- The design intent is to have a single face concrete barrier that does not move and interfaces with a rigid bridge feature that also does not move.

C. End Treatments for Single Face Concrete Barrier. Design considerations of end treatments for single face concrete barrier should include the following:

- The preferred end treatment for single face concrete barrier (with fill) is for it to be buried in a backslope because it eliminates the possibility of an end-on hit.

- If a single face concrete barrier (without fill) cannot be terminated in a backslope, is located within the clear zone, and/or is exposed to likely vehicular impacts, it is to be terminated with a crash cushion.

- On undivided highways with two-lane, two-way traffic, a transition from single face concrete barrier to guide rail on the approach end and on the trailing end must include a moment slab with single face concrete barrier and transition (as described in Section 12.8.B and as shown in Drawing RC-58M) and a guide rail to bridge barrier transition (as shown in Drawing RC-50M).

- On divided highways and one-way roadways where opposing traffic will not be able to impact the trailing end of a single face concrete barrier, the single face concrete barrier is to extend a minimum of 9 ft along the shoulder beyond the pier(s) (as shown in Drawing RC-58M). In this situation, the trailing end of a single face concrete barrier does not require a crashworthy end treatment or moment slab.

If the end of the single face concrete barrier cannot reasonably be buried in a backslope, a crash cushion should typically be installed. However, a sloped end transition, as shown in Drawing RC-58M, may be used at the end of single face concrete barrier if all of the following conditions apply:

1. The highway is non-NHS.
2. The posted speed or design speed is 35 mph or less.
3. There is no crash history associated with the end of the single face concrete barrier.

The three conditions identified above also apply if a transition is to be provided between the cross-sectional shape of a plain cement concrete curb and the cross-sectional shape of a single face concrete barrier. A slope of 1V:6H or flatter may be provided to transition vertically between these two cross-sectional shapes. For example, a transition length of 12 ft or longer may be provided to transition vertically between the height of a plain cement concrete curb of 8 in and the height of a single face concrete barrier of 32 in. The transition vertically would be a height change of 2 ft (32 in – 8 in) over a length of 12 ft, or a slope of 1V:6H. This transition vertically is not MASH compliant, and a project-specific special detail is needed.

D. Moment Slab with Barrier and Transition. When a single face concrete barrier transitions to guide rail, a moment slab is required in some situations, as noted below. The moment slabs have single face concrete barrier and a concrete transition from F-shape to a vertical wall.

On undivided highways with two-lane, two-way traffic, designs may require a transition from single face concrete barrier to guide rail. In these locations, a moment slab with barrier and transition is to be constructed on both the approach end and the trailing end.

On divided highways or on one-way roadways (where the barrier is unlikely to be hit from other intersecting roadways), designs may also require a transition from single face concrete barrier to guide rail. In these locations:

- On the approach end, a moment slab with barrier and transition needs to be constructed.
- On the trailing end, a transition from single face concrete barrier to guide rail is to be built without a moment slab as discussed in Section 12.8.E.

The moment slabs with barrier and transitions are shown in Publication 72M, *Roadway Construction Standards,* Drawing RC-58M. This construction is cast-in-place and consists of either a buried moment slab (when using asphalt pavements) or an at-grade moment slab (when using concrete pavements).

Inlets are not permitted to be placed within the moment slab.

Drawing RC-58M presents a cross section view of cast-in-place moment slabs with single face concrete barriers. This cross section view shows how the construction appears as a shape of the letter "L". A vehicle impact load occurs on the vertical part of the "L" (single face concrete barrier). The vehicle impact load is resisted by the inertia of the horizontal part of the "L" (moment slab).

The intent of the moment slab is to provide stability for the barrier to resist impact loads and to reduce the influence of those impact loads on the single face concrete barrier by distributing the load over a wide area.

The moment slab is built by arranging the steel reinforcement bars, as shown in Drawing RC-58M, and then placing the concrete. Multiple steel reinforcement bars extend out of the top of the moment slab to provide a structural connection between the moment slab and the single face concrete barrier.

On the end of the moment slab where guide rail would be installed, Drawing RC-58M shows a "barrier transition". The "barrier transition" includes the following:

- A minimum 9 ft long portion of a concrete barrier with a F-shape;
- A 7 ft long portion that transitions the concrete barrier from a F-shape to a vertical shape; and
- A 4 ft long portion of a vertical barrier as shown in Drawing RC-50M.

The vertical shape barrier serves as the location to connect guide rail to it. An installation of a typical guide rail to bridge barrier transition (with curb and without curb) is shown in Drawing RC-50M.

E. Trailing End Guide Rail Connection for Divided Highways or One-Way Roadways. Designs may require a connection from single face concrete barrier to guide rail on the trailing end along divided highways or along one-way roadways where the barrier is unlikely to be hit from other intersecting roadways. In these locations, a trailing end guide rail connection for divided highways may be constructed as shown in Drawing RC-58M. The guide rail on the trailing end includes Type 31-S Guide Rail with a minimum length of 25 ft. A moment slab is not required.

F. Typical Placement at Piers Adjacent to Shoulders. Details are shown in Drawing RC-58M for typical placement of single face concrete barrier at piers adjacent to shoulders. The design for the beginning and ending of the single face concrete barrier are to be shown in the project plans.

G. Typical Placement at Piers in Medians. Typical placement of single face concrete barrier at piers in medians is shown in Drawing RC-58M. Beyond the median piers, a flared transition with cast-in-place single face concrete barrier is to be provided to connect with F-shape concrete median barrier.

H. Single Face Concrete Barrier Transitions. The Department has developed standard details for various combinations of single face concrete barrier transitions for permanent installations. These standard details are shown in Publication 72M, *Roadway Construction Standards,* Drawing RC-59M, and depict single face concrete barrier transitions from:

- Roadway barrier to roadway barrier;
- Roadway barrier to concrete bridge barrier, F-shape; and
- Roadway barrier to concrete bridge barrier, vertical wall.

Drawing RC-59M depicts how the single face concrete barrier transitions vary in height, width, length, reinforcement, and construction method (precast or cast-in-place). These single face concrete barrier transitions are MASH compliant with the following test levels:

- MASH Test Level 3 for a transition with any of its height < 36 in above the pavement surface; and
- MASH Test Level 4 for a transition with all of its height ≥ 36 in above the pavement surface.

12.9 IMPACT ATTENUATING DEVICES

A. Introduction. Barrier end treatments and crash cushions are protective systems that prevent errant vehicles from impacting fixed objects by either gradually decelerating the vehicle to a stop when hit head-on, or by redirecting it away from the object for glancing impacts. These devices are used to shield barrier ends and other rigid objects that cannot be removed, relocated or made breakaway. Crash cushions and barrier end treatments are not intended to reduce crashes but rather to lessen their severity.

The intended function of all types of impact attenuating devices is to dissipate the energy of the vehicle either partially during a side-on impact or fully in the case of a head-on impact. This is accomplished through the principle of mechanics: "the change in kinetic energy is equal to the work done on the system." Some devices dissipate energy by crushing the elements of the system; others by putting the components of the attenuating system into motion. A third type operates on a combination of these two principles.

The best choice a designer can make is to eliminate the need for barrier. Roadside barrier and terminals must be selected, installed, and maintained in such a manner that a motorist striking it at any speed or angle has the best chance for survival. Terminal selection must be a deliberate design decision based on site conditions and on the known performance characteristics of the various terminals.

B. Performance Requirements. The AASHTO *Manual for Assessing Safety Hardware* (MASH) contains the current recommended procedures for testing and evaluating the crashworthy performance of highway safety devices, including impact attenuating devices. Projects let after June 30, 2018 must use MASH 2016 compliant W-beam terminals. Projects let after December 31, 2018 must use MASH 2016 compliant Type IV, V, and VI terminals.

If the height of the impact attenuating device and the guide rail differs, provide a transition section over a length of 25 ft.

Crashworthy impact attenuating devices are needed for all new longitudinal barrier installations when those end treatments are located within the clear zone and/or exposed to likely vehicular impacts with exceptions as noted in Sections 12.4.K.2 and 12.4.K.3.

C. Terminal Characteristics. Crashworthy terminals are classified as non-gating or gating by design. A non-gating system will gradually stop or redirect a vehicle away from a fixed object, while a gating terminal allows a vehicle to pass through after impact when the tension in the system is released.

Non-gating terminals are the high type crash cushions used to terminate median barriers for bidirectional traffic, gore areas, and other narrow or wide obstructions. Crash cushion systems such as sand barrels or water filled are gating terminals that can be used to shield a narrow or wide obstruction. However, they are not designed to redirect vehicles for side impacts.

All of the W-beam guide rail terminals discussed in Section 12.9, except for the buried-in-backslope terminal, are gating terminals. That simply means that all of them, when struck at or near the nose at an angle of 15° or greater, will yield readily, allowing a vehicle to continue into the area immediately behind and beyond the terminal. Thus, for angle hits of 15° or higher at or near the first post, all W-beam terminals perform about the same and most impacting vehicles will travel behind and beyond the terminal.

W-beam guide rail terminals have also been classified as either tangent designs (installed parallel to the roadway edge) or flared designs (flared away from the roadway). Experience has shown, however, that even "tangent" terminals are best installed with a 1 ft or 2 ft offset from the line of barrier proper (over the entire terminal length) to minimize nuisance hits. Typical flared terminals generally require a 4 ft offset from the barrier itself, although some designs have been successfully tested with lesser offsets. The actual offset distance of a terminal may have a significant effect on site grading requirements as discussed later in more detail. However, the most significant difference in terminal performance is whether or not a terminal is likely to slow an impacting vehicle appreciably in near end-on crashes.

Most gating terminals for W-beam guide rail have been designed and developed to dissipate significant amounts of the kinetic energy in a head-on crash and are considered to be **energy-absorbing designs**. In high-speed, head on impacts on the terminal nose, energy-absorbing terminals have demonstrated their ability to stop impacting vehicles safely in relatively short distances (usually 50 ft or less depending on type of terminal). Some gating terminals for W-beam guide rail are classified as **non-energy absorbing designs** and will allow an unbraked vehicle to travel over 150 ft behind and parallel to the guardrail installation or along the top of the barrier when struck head-on at high speeds.

The decision to use an energy-absorbing terminal versus a non-energy absorbing terminal should be based on the likelihood of a near end-on impact and the nature of the recovery area immediately behind and beyond the terminal. **If the barrier length of need was properly determined, it is unlikely that a vehicle will reach the primary shielded object after an end-on impact regardless of the terminal type selected. However, if the terrain beyond the terminal end and immediately behind the barrier is not safely traversable, an energy-absorbing terminal is recommended.**

D. Site Grading Requirements. Grading in the area of the terminal is an important consideration regardless of the specific terminal type used. The grading must be considered from three perspectives: ***advance grading***, ***adjacent grading*** and ***runout distance grading***. Proper grading in **advance** of the terminal is needed to be sure the vehicle is stable at the point of initial contact. Proper grading **adjacent** to the terminal is needed to be sure the vehicle remains stable while in physical contact with the terminal. Finally, proper ***runout distance grading*** immediately downstream and behind the terminal is needed to be sure the vehicle remains stable after it clears the terminal and comes to a stop. This runout distance, not to be confused with the runout length needed to calculate barrier length of need, is especially important for near end-on hits into non-energy absorbing terminals.

1. Advance Grading. ***Advance grading*** must be applied to the terrain over which a vehicle may travel before contact with a barrier terminal. For W-beam terminals, this area should be no steeper than 1V:10H to ensure that a vehicle is stable at the moment of impact and that its suspension is neither extended nor compressed. When grading platforms are built, they must be smoothly transitioned to existing sideslopes so that the entire roadside approach to the barrier remains traversable as well as the area immediately behind it. In many instances, it will be more cost-effective to extend the barrier itself so its terminal can be installed without the need for additional earthwork or to use a terminal that requires less flare.

2. Adjacent Grading. ***Adjacent grading*** refers to the area on which the terminal is installed and the area immediately behind it. Ideally, this area should be essentially flat so the terrain itself does not exacerbate vehicle roll, pitch or yaw upon impact with the terminal. For impacts into the side of a terminal where redirection is expected (from the third post back for current W-beam terminals), the terminal posts should have at least 3 ft of soil support behind them. These recommended dimensions are shown in Publication 72M, *Roadway Construction Standards,* Drawing RC-54M. If a grading platform was constructed, the departure end of this platform must be gradually blended into the (usually) steeper sideslopes behind the barrier. From a practical standpoint, a recoverable slope of 1V:4H behind the terminal may be a practical compromise, and in some cases a traversable slope as steep as 1V:3H may be acceptable. While such grading should be possible on freeways and many other high-speed arterial highways, it may not be cost-effective on roadways with limited rights-of-way and reduced clear zones. In these locations, the area immediately behind the terminal should be at least similar in nature to the roadside immediately upstream from the terminal.

3. Runout Distance Grading. ***Runout distance grading*** refers to the area into which an impacting vehicle may travel after breaking through a gating terminal. The physical extent of the area needed will vary depending on vehicle size and impact speed, impact angle, driver reaction, terrain character, and terminal type.

While it is desirable to have a long recovery area available immediately behind the barrier, practical considerations will often dictate a much smaller area. As recommended in Section 8.3.3.3 of the AASHTO Roadside Design Guide, the minimum recovery area behind and beyond all W-beam terminals should be an area approximately 75 ft long and 20 ft wide. Note that if the roadside in advance of the terminal does not have a 20 ft wide recovery area, it is not intended that additional clear zone be provided behind the terminal, but the recovery area should at least be consistent with that available elsewhere along the road. In many cases, it may not be practical to provide even a minimum runout area due to physical constraints such as restricted rights-of-way or environmental concerns.

E. Crashworthy End Treatments. Crashworthy end treatments acceptable for use in Pennsylvania are listed below by type for a particular application. They are categorized by type as follows:

- Type I - Buried-in-Backslope Terminal
- Type II - Energy Absorbing Terminals
- Type III - Non-Energy Absorbing Terminals
- Type IV - Gating Systems Used Where Two-Way Traffic Is Present
- Type V - Non-Gating Terminals Used Where Two-Way Traffic Is Present
- Type VI - Gating, Non-Redirective Crash Cushion Systems
- Miscellaneous Systems

Publication 408, *Specifications*, and special provisions, as well as Publication 35, *Approved Construction Materials* (Bulletin 15), indicate a list of approved devices as follows:

- Publication 408, *Specifications*, Section 619 - Permanent Impact Attenuating Devices

- Publication 408, *Specifications*, Section 696 - Temporary Impact Attenuating Devices (This work is the furnishing, placing and removing of temporary impact attenuating devices for maintenance and protection of traffic during construction.)

- Publication 408, *Specifications*, Section 697 - Reset Temporary Impact Attenuating Devices (This work is the resetting of a temporary impact attenuating device from one construction area to another within the project limits.)

As listed in Publication 35, *Approved Construction Materials* (Bulletin 15), some devices may be used as either permanent or temporary devices and they are as follows: Type IV, Type V - Standard, and Type VI. Bulletin 15 provides links to webpages with further product information.

Conversely, the Type V Low Maintenance/Self Restoring systems **are only to be used in permanent locations** where there are high traffic volumes and there is high potential for being impacted. Although the Type V-Low Maintenance/Self Restoring systems are designed to accept a second hit without repair (in most cases), the Department does not have enough experience with a second hit or with the service life capabilities of these systems. Type V-Low Maintenance/Self Restoring systems could be used in a long-term work zone with unique setting conditions, but they cost twice as much as a Type V-Standard device and are not considered the best choice.

A proprietary system may be justified based on unique and special highway conditions. Prior approval must be acquired to use proprietary items. Refer to Publication 51, *Bid Package Preparation and Policies Manual,* for guidance.

The Department has established a website with a product listing of permanent impact attenuating devices that are MASH 2016 compliant. Publication 35, *Approved Construction Materials* (Bulletin 15) provides a link to this product listing.

1. Type I - Buried-in-Backslope Terminal.

a. Description. This terminal is constructed by attaching the W-beam guide rail to a post anchor buried into the backslope while retaining its full height relative to the edge of traveled way.

A W-beam guide rail that can be terminated in a backslope is a preferred end treatment because it eliminates any possibility of a true end-on hit. However, an effective installation must satisfy several design criteria.

First and foremost of these must be the steepness of the slope into which the W-beam is anchored. The ideal slope is one that is nearly vertical, in which case the slope in effect becomes an extension of the barrier and a motorist cannot physically get behind the terminal. In such a case, the barrier can be brought into the backslope as soon as practical using the maximum flare rate appropriate for the design speed of the highway.

If the backslope is significantly flatter than 1V:1H, a buried-in-backslope design behaves essentially like a turned-down terminal and can be overridden. In these instances, the full design length of need of the barrier must be provided and there should be a minimum distance behind the rail that is 75 ft long and 20 ft wide that is both free of fixed objects and reasonably traversable, just as with all other W-beam terminals. Note that if the roadside in advance of the terminal does not have a 20 ft wide recovery area, it is not intended that additional clear zone be provided behind the terminal, but the recovery area should at least be consistent with that available elsewhere along the road. **For the buried-in-backslope terminal, the length of need begins at the point where the W-beam remains at full height in relation to the roadway shoulder, usually at the point where the barrier crosses the ditch line. If the backslope continues under and in front of the flared W-beam, the rail height is effectively reduced and the slope forms a ramp that could allow a vehicle to override the rail instead of being redirected.**

A buried-in-backslope terminal with a single rail configuration may be installed with a foreslope of 1V:10H or flatter. The height of the Type 31-S Guide Rail is measured from the ground directly beneath the rail.

A buried-in-backslope terminal with a double rail configuration (i.e., Type 31-S Guide Rail with extra length posts and a second W-beam rail) has been successfully tested to MASH TL-3 over a 1V:4H foreslope and a 1V:2H backslope. The height of the W-beam rail was held constant in relation to the roadway shoulder elevation until the rail crossed the ditch bottom. A second W-beam rail is to be added to minimize wheel snagging on the support posts. A separate pay item must be included in the PS&E package for the second W-beam rail element and for the 8 ft long posts. The buried-in-backslope terminal with a double rail configuration may be considered for installation at V-ditch locations with a 1V:4H or flatter foreslope.

b. Application. The most desirable method to terminate guide rail is to bury the end in a backslope where it cannot be hit end on. This system should also be used even when the barrier system's Length of Need (LON) would normally end downstream of a backslope if the backslope is within 200 ft and there is not a large available runout area (200 ft × 50 ft) beyond the terminal. Standard details for the buried-in-backslope terminal are shown in Publication 72M, *Roadway Construction Standards,* Drawing RC-54M.

2. Type II - Energy Absorbing Terminals.

a. Description. Energy absorbing terminals may be categorized as flared or tangent. Flared terminals are preferred because they are installed 4 ft away from the edge of shoulder at the approach end. Both types require level (1V:10H) terrain in front of the system and 3 ft behind since they are gating systems. Tangent terminals are used when the area needed for flared terminals is not available and they are installed parallel to the shoulder with 1 ft to 2 ft offset at the nose. They will redirect vehicles for side angle impacts beyond the third post.

Energy absorbing terminals have been designed and developed to dissipate significant amounts of the kinetic energy in a head-on crash. In high-speed, head on impacts on the terminal nose, energy-absorbing terminals have demonstrated their ability to stop impacting vehicles safely in relatively short distances

(usually 50 ft or less depending on type of terminal). In contrast, non-energy absorbing terminals will allow an unbraked vehicle to travel over 150 ft behind and parallel to the guide rail installation or along the top of the barrier when struck head-on at high speeds.

If the barrier length of need was properly determined, it is unlikely that a vehicle will reach the primary shielded object after an end-on impact regardless of the terminal type selected. However, if the terrain beyond the terminal end and immediately behind the barrier is not safely traversable, an energy-absorbing terminal is recommended.

b. Application. These end terminals are used on the approach end of single runs of Strong Post (Type 31) W-beam guide rail on either side of the roadway. They may also be used to terminate Weak Post (Type 2-W) guide rail with a 50 ft transition of Strong Post guide rail between the Weak Post system and the terminal. See Section 12.5.D for appropriate length of need determination and Publication 72M, *Roadway Construction Standards,* Drawing RC-54M for site grading details.

3. Type III - Non-Energy Absorbing Terminals.

a. Description. Non-energy absorbing terminals will allow an unbraked vehicle to travel over 150 ft behind and parallel to the guide rail installation or along the top of the barrier when struck head-on at high speeds.

b. Application. These end terminals are used on the approach end of single runs of Strong Post (Type 31) W-beam guide rail on either side of the roadway. They can also be used to terminate Weak Post (Type 2-W) guide rail with a 50 ft transition of Strong Post guide rail between the terminals and the Weak Post system. See Section 12.5.D for appropriate length of need determination and RC-54M for site grading details.

4. Type IV - Gating Systems Used Where Two-Way Traffic Is Present.

a. Description. These systems use a variety of methods to dissipate the kinetic energy of an impacting vehicle in head-on crashes, arresting the vehicle in a controlled manner such that the risk of serious injuries to the occupants is minimized.

b. Application. These systems can be used to terminate W-beam guide rail, concrete median barrier, and double-faced W-beam median barrier. They are typically used in roadway medians that are 10 ft wide or more, but also have application in shoulder and gore areas and on point hazards such as bridge piers. Redirection of the impacted vehicle begins at different points along each of the devices, but impacting vehicles will pass through the device on side angle impacts at the approach end. Approved terminal to barrier connections as needed are incidental to each system. These systems can be installed in permanent locations or temporary in work zones.

5. Type V - Non-Gating Terminals Used Where Two-Way Traffic Is Present.

a. Description. These systems use a variety of methods to dissipate the kinetic energy of an impacting vehicle in head-on crashes, arresting the vehicle in a controlled manner such that the risk of serious injuries to the occupants is minimized. The redirection point of these devices begins at the approach end of the device, i.e., they are non-gating.

Type V crash cushions may be described as standard or low maintenance / self restoring. Type V Low Maintenance/Self Restoring crash cushions either suffer very little, if any damage, upon impact and are easily pulled back into their full operating condition, or they partially rebound after an impact and may only need an inspection to ensure that no parts have been damaged, misaligned, etc.

b. Application. These systems can be used to terminate concrete median barrier, double-faced W-beam median barrier, and other obstructions. They are typically used in narrow or wide roadway medians, but also have application in shoulder and gore areas and on point hazards such as bridge piers and other wide obstructions. Approved terminal to barrier connections as needed for reverse direction impacts, are incidental to each system. These systems can be installed in permanent locations or temporary in work zones. In the PS&E package, include a special provision to indicate what width "W" is to be protected by the Type V impact attenuating device.

6. Type VI - Gating, Non-Redirective Crash Cushion Systems.

a. Description. These systems include a group of unrestrained barrels partially filled with sand and a crash cushion system filled with water. The energy of an impacting vehicle is dissipated by a transfer of the vehicle's momentum to the mass of the sand barrels or water-filled crash cushions. These systems can be used to shield a narrow or wide obstruction. However, they are not designed to redirect vehicles for side impacts.

b. Application. Appropriate arrangements of sand filled barrels may be used to shield barrier walls up to 13 ft wide, gore areas and other fixed objects in low frequency impact areas. Sand barrels are not designed to redirect vehicles for side impacts; consequently, modules near the rear of the array should be carefully placed to minimize the likelihood of a motorist striking the corner of the object being shielded.

Recommended locations of the water filled crash cushion system (ABSORB 350) are gore areas, ramps and other locations where penetration of an errant vehicle is not likely to cause a crash in opposing traffic lanes, or impacts with workers behind the barrier. This device should only be used in locations where non-redirection is appropriate and is not to be used in medians with opposing traffic unless the device is located outside the clear zone for both directions. Vehicle penetration is likely to occur for angle hits from the nose to near the mid-point of the array, and penetration/override of the system is possible for high-speed, high angle impacts near the rear of the device. Also note that proper anti-freezing agents must be used when the ABSORB 350 is used in areas where low temperature can be anticipated.

7. Miscellaneous Systems. The DRAGNET is not normally used except in special conditions. The DRAGNET system is an arresting type of attenuator that provides a safe, controlled stop with a minimum of damage to the impacting vehicle, regardless of speed or vehicle size. The DRAGNET system, with its ability to span any road width, is ideal for utilization in work zones.

The DRAGNET should be used under unique circumstances on a case-by-case basis, since it is proprietary and a sole source item.

INTENTIONALLY BLANK

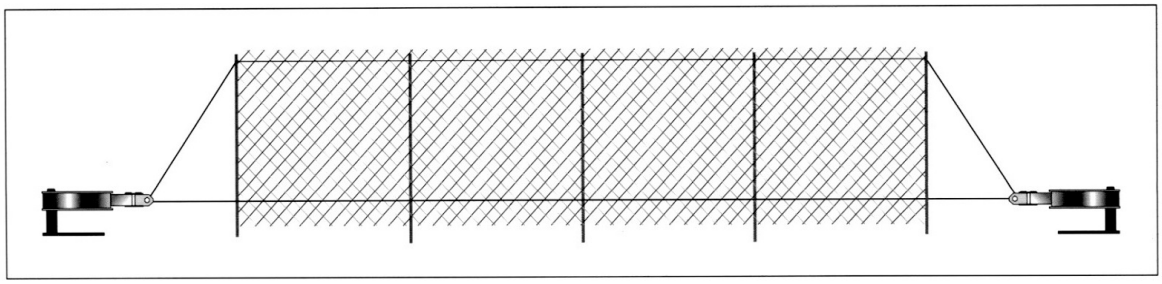

The **DRAGNET VEHICLE ARRESTING BARRIER**, (or "VAB") consists of a net with a continuous cable running through the top and bottom, both ends of which are attached to customized "enegry absorbers". These energy absorbers contain a spool of coiled steel alloy tape. The tape is lead through a series of offset steel pins contained in the energy absorbers. As the net is hit, the metal tape is pulled through the pins, constantly bending and straightening the tape.

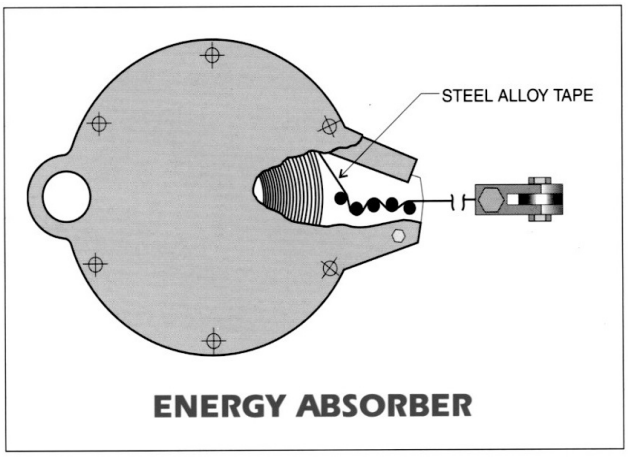

This metal deformation causes the smooth, safe deceleration of the vehicle. By changing the gauge of the metal tape and configuration of the pins, a barrier can be designed to handle any situation from an 1,800 pound car to an 80,000 pound tractor trailer.

F. Design Considerations and Criteria. Common applications of end treatments and crash cushions include roadside and median installations to terminate barriers for protection of potential impacts with fixed "point" objects. Obstacles such as bridge abutments, bridge piers, non-breakaway sign supports, and other obstacles of similar geometry (short in the longitudinal direction) represent examples where crash cushions can be effectively used to reduce a potential serious impact.

Impact attenuating devices are designed to restrain vehicle impacts under what may be termed "normally expected impact modes". That is, the vehicle is expected to be in stable on-the-surface mode at impact although obviously out of the normal travel lane. They are designed to mechanically restrain an impacting vehicle through a force line at expected bumper height when the vehicle is in a wheels-on-the-ground mode.

The approach to impact attenuating devices needs to be level (1V:10H or flatter). Also, the area behind the terminal should be free of significant fixed objects for those systems that are designed to move laterally. If a clear runout path is not attainable, this area should be at least similar in character to upstream, unshielded roadside areas.

Further discussion of this criteria can be found in the AASHTO Roadside Design Guide, Chapter 8.

G. Approval Policy. As outlined in Section 12.9.B, all new installations of impact attenuating devices must meet the criteria of MASH 2016. Publication 35, *Approved Construction Materials* (Bulletin 15), lists the approved impact attenuating devices and describes the means to submit impact attenuating devices for consideration for approval and listing in Bulletin 15.

12.10 TEMPORARY BARRIERS

A. Introduction. Temporary barriers are devices designed to help prevent penetration by vehicles while minimizing injuries to vehicle occupants, and to separate workers, bicyclists, and pedestrians.

The primary functions of temporary barriers are to:

- Reduce likelihood of traffic entering work areas such as excavations or material storage sites.
- Provide separation for workers.
- Separate two-way traffic.
- Separate construction such as falsework for bridges and other exposed objects.
- Separate pedestrians from vehicular traffic.

Installation of temporary barriers is to provide adequate lane width for vehicles to travel through the work zone, yet at the same time provide sufficient space for construction activity.

If temporary barriers are used to channelize vehicular traffic, standard delineations, pavement markings, or channelizing devices should supplement temporary barrier for improved daytime and nighttime visibility. The delineation color is to match the applicable pavement marking color.

Temporary barriers, including their end treatments, are to be crashworthy if vehicles are likely to strike them. To mitigate the effect of striking a temporary barrier, install the end either by flaring until the end is outside the acceptable clear zone or by providing crashworthy end treatments.

Flare rates for temporary barrier should desirably be the same as flare rates for permanent barrier. Where the flare rates for temporary barrier cannot meet the flare rates for permanent barrier, provide documentation on what flare rate was selected.

B. Need for Temporary Barriers. Use of longitudinal temporary barriers should be based on an engineering analysis. However, improper use of temporary barriers can provide a false sense of security for both the motorist and the worker. Therefore, care must be taken in their design, installation, and maintenance.

Several designs for temporary barriers are available that may be appropriate for work-zone applications. Although no consensus on specific warrants exists, barriers are usually justified for bridge widening; shielding of roadside structures; roadway widening (especially with edge dropoffs); and for separating two-lane, two-way traffic on one roadway of a normally divided facility.

FHWA's Temporary Traffic Control Devices Rule (23 CFR 630, Subpart K) requires the consideration of positive protection such as temporary barriers, where the temporary barriers offer the highest benefits to worker safety. This consideration of positive protection includes situations where workers may be at increased risk of serious injury from exposure to traffic.

The following list is referenced from the American Traffic Safety Services Association's publication, *Guidelines on the Use of Positive Protection in Temporary Traffic Control Zones*.

https://www.workzonesafety.org/files/documents/training/fhwa_wz_grant/atssa_positive_protection_guidelines.pdf

Factors to consider in determining the need for temporary barrier include:

1. Project scope and duration
2. Anticipated traffic speeds through the work zone
3. Anticipated traffic volume
4. Vehicle mix
5. Type of work (as related to worker exposure and crash risks)
6. Distance between traffic and work, and extent of worker exposure
7. Limited escape paths
8. Time of day (e.g., night work)
9. Consequences to road users resulting from roadway departure

10. Potential hazard to workers and road users presented by device itself, placement and removal
11. Geometrics and/or work area restrictions that may increase crash risk
12. Access to/from work space
13. Roadway classification
14. Impacts on project cost and duration

C. Performance Requirements. The AASHTO *Manual for Assessing Safety Hardware* (MASH) contains the current recommended procedures for testing and evaluating the crashworthy performance of highway safety devices, including temporary barriers. Temporary barriers manufactured after December 31, 2019, must have been successfully tested according to the 2016 edition of MASH.

D. Material and Construction Requirements. The material and construction requirements for temporary barriers are described in:

- Publication 408, *Specifications*, Section 627 - Temporary Barrier
- Publication 408, *Specifications*, Section 628 - Reset Temporary Barrier
- Publication 408, *Specifications*, Section 901 - Maintenance and Protection of Traffic

Publication 35, *Approved Construction Materials* (Bulletin 15), lists the approved temporary barriers, including:

- Precast Concrete Barriers and Glare Screens
- Steel Barriers
- Water-Filled Barriers

Each of the approved temporary barriers listed in Bulletin 15 is described by name, type, material, tested criteria, barrier shape, connection type, tested height, tested deflection, barrier approved crash Test Level, and reference number (FHWA Eligibility Letter) (refer to Section 12.4.A and Table 12.3 for more information on Test Levels). Temporary barriers that are either NCHRP Report 350 compliant, MASH 2009 compliant, or MASH 2016 compliant may be specified.

Temporary concrete barriers manufactured on or before December 31, 2019, and successfully tested according to NCHRP 350 or the 2009 edition of MASH, may continue to be used on or before December 31, 2026. Temporary concrete barrier used after December 31, 2026 must be crashworthy according to MASH 2016.

Temporary steel barriers and temporary water-filled barriers manufactured on or before December 31, 2019, and successfully tested according to NCHRP 350 or the 2009 edition of MASH, may continue to be used throughout their normal service lives. If available, MASH 2016 temporary steel barriers and temporary water-filled barriers should be used.

However, the severe impact angle crash test may not be representative of actual field conditions during construction. As an example, vehicles may travel through a one-lane "cattle chute", with a temporary barrier placed on each side of the lane, or with a temporary barrier that separates opposing lanes of travel. These vehicles will likely impact the temporary barrier at a lower speed and smaller angle than what is assumed in the controlled crash test. As a result, for a one-lane "cattle chute", the deflection distance of the temporary barrier is likely to be less than in the controlled crash tests. Therefore, engineering judgment should be used in selecting temporary barrier.

Typically, the specific material and type of temporary barrier would not be listed on the plans unless it is a proprietary item or the F-shaped temporary concrete barrier is able to be specified.

Chapter 12, Appendix C provides additional information about two generic temporary barriers approved for use on PennDOT projects: (1) PennDOT's F-Shape Temporary Concrete Barrier; and (2) Single Face Concrete Barrier. Refer to Publication 35, *Approved Construction Materials* (Bulletin 15) for information on other generic temporary concrete barriers, as well as information on non-generic temporary barriers, including concrete, steel, and water-filled.

E. Lateral Placement of Temporary Barrier in a Dropoff Condition.

1. Design Considerations. Work zones may have locations where dropoffs greater than a height of 2 in are adjacent to an active travel lane.

During the design and construction phases, work zone set-ups must be reviewed thoroughly for locations where temporary barrier may need to be placed between the active travel lane and the dropoffs. Publication 408, *Specifications*, Section 901.3(j) describes the conditions and treatments where temporary barrier may need to be installed for continuous and intermittent dropoffs that are created by construction, maintenance, or permit/utility operations.

Temporary barrier is not required to be specified with deflection distance and Test Level, except as noted below for dropoff situations.

For locations where temporary barrier is to be located beside dropoffs, three linear measurements are to be identified:

- Dropoff Height. The dropoff height is typically greater than 2 in.
- Lateral Space (LS). The LS is the distance available behind the temporary barrier to accommodate barrier deflection.
- Barrier Deflection Distance (BDD). The BDD is equal to the tested deflection for the temporary barrier at the specified Test Level (e.g., TL-2, TL-3, TL-4). For the BDD of various PennDOT-approved temporary barriers, refer to Publication 35, *Approved Construction Materials* (Bulletin 15).

Figure 12.23 describes three dropoff conditions with lateral placement of temporary barrier:

- Condition 1 - BDD ≤ LS: This is a desirable condition for dropoff heights greater than 2 in. The LS behind the temporary barrier is equal to or greater than the BDD for the selected temporary barrier.
- Condition 2 - BDD > LS, Dropoff Height < 6 in: This condition is only permissible when the dropoff is less than 6 in and the work zone set-up has been reviewed to maximize the LS.
- Condition 3 - BDD > LS, Dropoff Height ≥ 6 in: Under this condition, the temporary barrier is to be stiffened with restraints. Methods to limit the BDD for temporary barriers must be approved by the Bureau of Project Delivery.

INTENTIONALLY BLANK

FIGURE 12.23
LATERAL PLACEMENT OF TEMPORARY BARRIER IN A DROPOFF CONDITION

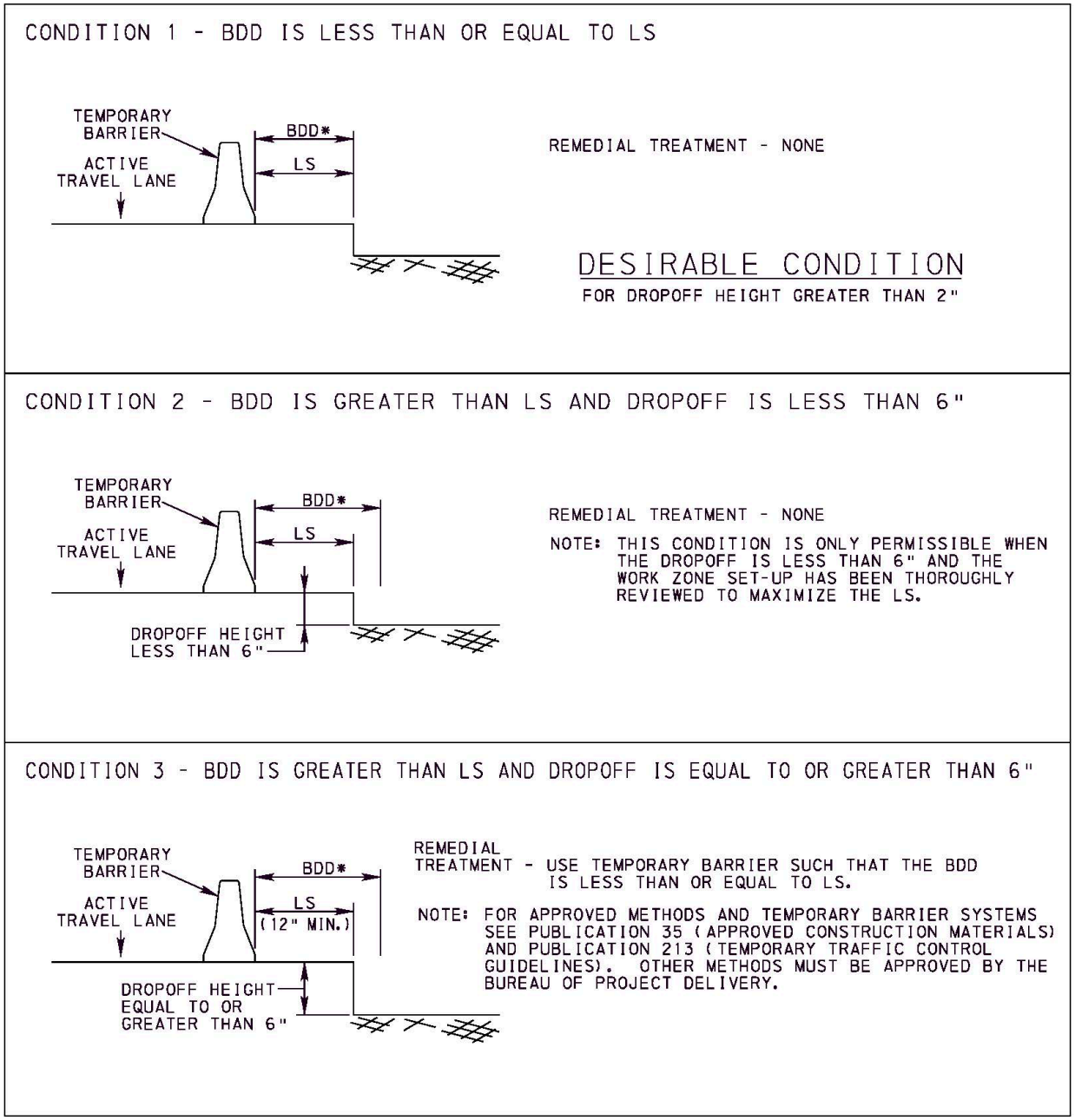

Where: BDD = BARRIER DEFLECTION DISTANCE
LS = LATERAL SPACE - DISTANCE AVAILABLE BEHIND TEMPORARY BARRIER TO ACCOMMODATE BARRIER DEFLECTION
* = For the deflection distance of various approved barriers, see Publication 35, *Approved Construction Materials* (Bulletin 15).

2. Plans and Proposal. In the instances where temporary barrier for dropoff conditions is to be included in the plans and proposal:

a. Identify the LS and the anticipated maximum dropoff height behind each run of temporary barrier.

b. Select a PennDOT-approved temporary barrier from one of the following categories:

- Test Level 3, BDD ≤ 2 ft
- Test Level 3, BDD ≤ 5 ft
- Test Level 3, BDD ≤ 9 ft
- Test Level 3, BDD ≤ 15 ft
- Test Level 2, BDD ≤ 9 ft
- Test Level 2, BDD ≤ 15 ft

Following are examples to clarify how PennDOT-approved temporary barriers may be selected.

EXAMPLE 1: A temporary barrier is to be placed between an active travel lane and a dropoff condition. The following conditions through the work zone are anticipated:

GIVEN: Work Zone Posted Speed Limit = 50 mph
Maximum Dropoff Height = 10 in
LS = 6 ft

DISCUSSION:

The above example corresponds with Condition 1 in Figure 12.23, where the BDD is less than or equal to the LS and no remedial treatment is needed. Also, the work zone posted speed limit is greater than the nominal speed for Test Level 2 (44 mph) but is less than the nominal speed for Test Level 3 (62 mph).

Therefore, for this example, a PennDOT-approved temporary barrier may be selected from a category that satisfies Test Level 3 and has a BDD less than the LS of 6 ft. The applicable categories are:

- Test Level 3, BDD ≤ 2 ft
- Test Level 3, BDD ≤ 5 ft

EXAMPLE 2: A temporary barrier is to be placed between an active travel lane and a dropoff condition. The following conditions through the work zone are anticipated:

GIVEN: Work Zone Posted Speed Limit = 35 mph
Maximum Dropoff Height = 5 in
LS = 10 ft

DISCUSSION:

The above example corresponds with Condition 1 and Condition 2 in Figure 12.23. The BDD for some temporary barriers is less than or equal to the LS (Condition 1). The BDD for other temporary barriers is greater than the LS and has a dropoff less than 6 in (Condition 2). Also, the work zone posted speed limit is less than the nominal speed for Test Level 2 (44 mph) and Test Level 3 (62 mph).

Therefore, for this example, a PennDOT-approved temporary barrier may be selected from a category that satisfies Test Level 2 or Test Level 3 and has a BDD less than the LS of 10 ft (Condition 1). The applicable categories are:

- Test Level 3, BDD ≤ 2 ft
- Test Level 3, BDD ≤ 5 ft
- Test Level 3, BDD ≤ 9 ft
- Test Level 2, BDD ≤ 9 ft

Because the dropoff is less than 6 in in this example, a PennDOT-approved temporary barrier may also be selected from a category that satisfies Test Level 2 or Test Level 3, and has a BDD greater than LS. The applicable categories are:

- Test Level 3, BDD ≤ 15 ft
- Test Level 2, BDD ≤ 15 ft

Temporary barrier selected from Condition 1 is the desirable condition, since the BDD is less than the LS. However, Condition 2 is permissible if the dropoff is less than 6 in and if the work zone set-up has been thoroughly reviewed to maximize the LS.

EXAMPLE 3: A temporary barrier is to be placed between an active travel lane and a dropoff condition. The following conditions through the work zone are anticipated:

GIVEN: Work Zone Posted Speed Limit = 50 mph
Maximum Dropoff Height = 24 in
LS = 2 ft

DISCUSSION:

The above example corresponds with Condition 3 in Figure 12.23, where the BDD is greater than the LS and the dropoff is greater than 6 in. Also, the work zone posted speed limit is greater than the nominal speed for Test Level 2 (44 mph) but is less than the nominal speed for Test Level 3 (62 mph).

Therefore, for this example, a PennDOT-approved temporary barrier may be selected from a category that satisfies Test Level 3 and has a BDD less than the LS of 2 ft. If the BDD is greater than 2 ft, the temporary barrier should be selected based on deflection distance and test level. The applicable categories are:

- Test Level 3, BDD ≤ 2 ft

12.11 BRIDGE RAILING TEST LEVEL SELECTION GUIDELINES

A. Introduction. This section provides guidelines, requirements and the procedure for the selection of MASH-compliant test levels for railings mounted on new bridges, bridge replacements, superstructure replacements, or deck replacements. These guidelines are based on NCHRP Project 22-12(03).

This section does not apply to existing barriers that will remain in place.

This section also does not apply to guide rail to bridge barrier transitions which are addressed in Section 12.3.E.2.

Refer to Figure 12.27, Figure 12.28, and Figure 12.29 for flowcharts that supplement the write-ups in Section 12.11.B, Section 12.11.C, and Section 12.11.D, respectively.

B. Standard Bridge Railing Test Levels.

1. Provide bridge railings that meet or exceed the following test levels (except Test Level 6), unless another test level is authorized by the District Executive (or designee):

- Test Level 3 (TL-3) for railings on box culverts, culvert type structures (e.g., cast-in-place/precast rigid frame) or slab bridges on a non-NHS roadway with a maximum span length of 32 ft (when favorable conditions of alignment and speed exist). For ADT ≥ 2000, perform a risk assessment (Section 12.11.D) to confirm use of TL-3 or use a higher test level. The risk assessment shall be included with the TS&L Submission.

- Test Level 4 (TL-4) for bridge median barriers.

- Test Level 5 (TL-5) for all other bridge railings.

2. Exceptions. There are a variety of factors and conditions (e.g., the bridge is historic) that may warrant an exception to these requirements. Use of an alternate bridge railing test level requires District Executive (or designee) authorization and must be justified and selected in accordance with Section 12.11.C.

3. Default Bridge Railings. The bridge railings detailed in Publication 218M, *Standards for Bridge Design*, have their designated MASH test level indicated in the general notes. Refer to DM-4, Section 13, Table 13.7.3.1-1P for a full listing of approved bridge railings and associated test levels.

The default TL-5 outside bridge railings (shown in BD-601M) are as follows:

- Interstates, Freeways, Expressways and Major Bridges: 45-in F-Shape Concrete Barrier

- All other Roadways and Bridges: 42-in F-Shape Concrete Barrier or 42-in Vertical Wall Concrete Barrier**

**The 42-in F-Shape Concrete Barrier and 42-in Vertical Wall Concrete Barrier are designated as TL-5. However, the railings would be designated as TL-4 when a future overlay is provided since the railing height would be reduced below 42 in. Refer to Section 12.3.D for minimum barrier requirements for pavement overlays.

The default TL-4 bridge median barrier is either the 50-in Concrete Median Barrier or the 50-in Split Concrete Median Barrier (shown in BD-601M).

The default TL-3 outside bridge railing for box culverts, culvert type structures or slab bridges on a non-NHS roadway with a maximum span length of 32 ft is the PA 3-Rail Bridge Barrier (BD-609M).

The default outside bridge railing for unprotected raised sidewalks is the 42-in Vertical Wall Bridge Barrier at Alternate Sidewalk (BD-601M).

4. Use of the TL-5 PA Bridge Barrier (BD-610M) requires authorization by the District Executive (or designee).

C. Alternate Bridge Railing Test Levels.

1. Authorization. Test Level 6 and test levels less than the standard test level indicated in Section 12.11.B may be authorized by the District Executive (or designee) on a case-by-case basis. A copy of the Alternate Bridge Railing Test Level Authorization (see Figure 12.26) shall be kept in the permanent bridge inspection file.

2. Applicability. Certain situations and conditions justify consideration of an alternate bridge railing test level and non-default bridge railings.

TL-6 may be considered for locations where a history of, or the potential for, heavy vehicle rollover crashes exists. See Section 12.11.C.4.c.

TL-3 or TL-4 may be considered in the following cases:

- Where favorable conditions of alignment, grade and speed exist and, hence, the probability of severe crashes is minimal.

- Where the height required for railings satisfying TL-5 for outside barriers or TL-4 for median barriers may hinder compliance with sight distance requirements.

- The bridge is historic (i.e., listed in, or eligible for listing in, the National Register of Historic Places) or contributing to a historic district.

3. Alternate Test Level Selection and Justification. The selection of the appropriate bridge railing test level is dependent on site-specific conditions and may differ for each side of the bridge. Therefore, each bridge edge and median should be evaluated individually.

To use an alternate bridge railing test level, provide justification to support approval of the selected test level. Justification shall typically include a risk assessment; however, additional analysis, special considerations and engineering judgment may be used in addition to or in lieu of a risk assessment.

a. Risk-Based Method. An assessment of specific factors and conditions can be used to identify which bridge railing test level is needed to keep the risk of a severe or fatal crash at or below an acceptable level. Complete the risk assessment in Section 12.11.D, when applicable, to determine the recommended bridge railing test level.

When the basic assumptions of the risk assessment are not met or the risk assessment does not initially yield a recommended test level, a collaboration of traffic operators, geometric design and bridge railing design engineers could reexamine the site conditions and agree to modify the traffic or geometry conditions so the risk assessment can determine the appropriate test level.

b. Additional Analysis and Engineering Judgment. When a recommended test level cannot be achieved using the risk assessment or site conditions are unusual or difficult to characterize and not explicitly addressed in the risk assessment, a more detailed analysis could be performed and engineering judgment used to select a test level. For example, a crash history investigation to determine the performance of the existing bridge railing could inform the test level selection.

c. Required Bridge Railing Characteristics. Typically, the appropriate test level is determined first followed by selection of a bridge railing. However, site conditions may call for specific bridge railing characteristics or otherwise require engineering judgment in the selection of a bridge railing (see Section 12.11.C.4.b). In these cases, the railing selection may take precedent over the recommended test level.

4. Bridge Railing Selection. The selected bridge railing must have a test level that meets or exceeds the selected alternate test level.

a. Permitted Bridge Railings. Refer to DM-4, Section 13, Table 13.7.3.1-1P for a complete list of approved TL-4 and TL-3 bridge railings which are detailed in Publication 218M, *Standards for Bridge Design*. For Test Level 6, see Section 12.11.C.4.c.

Use of bridge railings not given in Publication 218M, *Standards for Bridge Design*, requires approval by the Chief Bridge Engineer.

b. Special Considerations. Engineering judgment should be used when unusual or difficult to characterize site conditions are encountered when selecting a bridge railing. Limited numbers of crash tested bridge railings are available at some test levels; therefore, it is possible that bridge railings at the recommended test level for the evaluated site conditions may not be the best choice for some site conditions not explicitly addressed in the risk assessment. For example, the particular layout of the railing at the end or a ramp may influence intersection sight distances and require the use of engineering judgment in designing the interchange to determine an appropriate railing as it approaches the intersection. Another example is the presence of pedestrians or bicyclists which might benefit from a higher or different type of railing or the use of sidewalks.

Some of the factors that should also be considered are:

- TL-5 bridge railings may be appropriate for specially designated hazardous material or truck routes.
- Intersection sight distance obstructions created by higher test level bridge railings at the ends of ramps or bridges should be considered, and the bridge railings may require transitioning to a lower height approaching the intersection.
- The presence of pedestrians, bicyclists, snowmobiles, all-terrain vehicles and other recreational vehicles may affect the choice of bridge railing.
- Crash history especially as it relates to heavy vehicle crashes or bridge railing penetrations may justify higher performance bridge railings.
- Concerns about snow removal, hydrological impact of flood waters flowing over the bridge, and maintaining scenic views may also play a role in the selection of bridge railings.
- The capacity of the bridge deck may limit the choices available for higher test level bridge railings on rehabilitation projects.
- Sensitivity to the historical context may be considered in the selection of new bridge railings for bridges classified as historic (i.e., listed in, or eligible for listing in, the National Register of Historic Places) or contributing to a historic district.

c. Test Level 6 Bridge Railings. While a MASH TL-6 bridge railing might be appropriate in some circumstances (see also Section 12.11.D.4), as of December 2021 there is only one crash-tested TL-6 bridge railing in the country: Texas DOT's 90-in tall T80TT bridge railing. This bridge railing requires the use of non-standard deck details since the dead load of the bridge railing and overturning resistance are so large. It is not generally a viable option for most bridge construction projects because it cannot be used on a conventional deck. Contact the Chief Bridge Engineer for an updated list of TL-6 bridge railings.

Before selecting a TL-6 bridge railing, the engineer will need to carefully examine the structural characteristics of the deck and bridge structure as well as traffic and site conditions to determine if a TL-6 bridge railing is a realistic alternative. If a TL-6 bridge railing is selected, coordination is required with the Bureau of Bridge and the Bureau of Design and Delivery, Highway Design and Technology Division.

D. Risk-Based Test Level Selection.

1. Parameters and Applicability.

a. Tolerable Risk. The critical (maximum allowable) risk of a severe or fatal crash during the design life of the bridge railing is 0.01 per 1,000 ft of railing.

b. The basic assumptions of this risk-based method are as follows:

- 2 percent annual traffic growth
- Free traffic flow
- Level of Service (LOS) is C or better
- 30-year design life of the bridge railing

c. If traffic conditions violate the free traffic flow assumption used in developing this method, the estimate of the number of encroachments is not reliable. Generally, this results in a plot point in Figure 12.24 that is to the right of the end of the roadway-type line. This indicates that the Level of Service (LOS) may be D or worse and use of this method is not valid.

If the anticipated traffic growth rate or the design life are significantly different than those assumed above, an equivalent ADT can be computed (see Section 12.11.D.2.a) to allow this method to be used.

2. Basic Risk Assessment. The risk assessment considers roadway type and characteristics, traffic volume and mix, and site conditions to estimate the expected number of encroachments during the design life of the bridge railing and to rate the severity of the consequences of a vehicle penetrating through or rolling over the railing. The components and steps of the assessment are described below.

a. Traffic Volume and Mix. Determine the anticipated construction year bidirectional traffic volume (ADT) and percent trucks (T). This method assumes an annual traffic growth rate of 2% per year and a design life of 30 years. If the anticipated growth rate or design life are significantly different, use the following equation to compute the equivalent construction year traffic volume for use in the risk assessment:

$$ADT_{EQ} = 0.7430 \times ADT_0 \times (1 + G)^{L/2}$$

where:

ADT_0	=	The anticipated construction year bidirectional traffic volume (use the one-way traffic volume for one-way roads and ramps)
ADT_{EQ}	=	The equivalent construction year bidirectional traffic volume
G	=	The anticipated annual traffic growth rate where $0 \leq G \leq 1$
L	=	The design life of the bridge railing in years

Note: Use the bidirectional traffic volume even when there are separate bridge structures for each direction of travel on a divided highway.

b. Encroachments. Use Table 12.14 or Figure 12.24 to estimate the number of encroachments per 1,000 ft of bridge railing (N_{ENCR}) that will be experienced during the design life of the railing based on the bidirectional construction year ADT and the roadway type. This is a preliminary estimate that assumes the bridge is on a flat, tangent section with 12-ft lanes and two lanes of traffic in each direction for divided roadways, one lane of traffic in each direction for undivided roadways, and a single lane of traffic for one-way roads and ramps. Adjustments will be made in the next step for roadway characteristics that differ from these assumptions.

Observe the following guidance for estimating the number of encroachments:

- The roadway type is considered two-way even if there are separate bridge structures for each direction of travel.
- Do not proportion the value of N_{ENCR} based on the length of the bridge. The entire method is based on a per 1,000-ft basis.
- If the ADT of interest falls to the right of the end of the curve in Figure 12.24 for the desired roadway type, the Level of Service (LOS) for the highway is likely D or worse and this risk assessment is not valid; refer to Section 12.11.C.3.b.

c. Site Conditions. The probability of encroachment is affected by roadway characteristics such as roadway type, number and width of lanes, horizontal curvature, grade, speed, and access density for which the base estimate of encroachments must be adjusted. Determine the site-specific adjustment factors for the bridge under consideration using Table 12.15. Base the adjustment factors on the conditions adjacent to the railing of interest.

Multiply the adjustments from Table 12.15 together to obtain the total adjustments (f_{TOT}). If f_{TOT} exceeds 10, use alternate TL-4 for outside bridge railings in low hazard environments (see Section 12.11.D.2.d for hazard levels) and use the standard test level given in Section 12.11.B.1 for all other cases.

When f_{TOT} is less than or equal to 10, use one of the following methods to determine the modified number of encroachments ($N_{MOD\ ENCR}$) per 1,000 ft of bridge railing during its design life:

(1) Multiply the estimated number of encroachments (N_{ENCR}) from Table 12.14 by the total adjustments (f_{TOT}).

(2) Draw a horizontal line in Figure 12.24 until the curve corresponding to f_{TOT} is reached (interpolation between lines is acceptable) and read down to the horizontal axis.

Note: For median barriers, determine the adjustment factors for each side of the barrier separately and modify the number of encroachments based on the side with the greater total adjustments (f_{TOT}).

d. Hazard Environment. Rate the severity of the consequences of a vehicle penetrating through or rolling over the railing as high, medium, or low according to the following definitions:

(1) High. A high hazard environment below the bridge includes possible interruption to regional transportation facilities (e.g., interstates, freeways, expressways, arterials, transit / commuter railways, mainline freight railways, etc.) and/or interaction with a densely populated area below the bridge. Penetrating the railing may limit or impose severe limitations on the regional transportation network.

Penetrating the railing also has the possibility of causing multiple fatalities and injuries in addition to the injuries associated with the vehicle occupants. A high-hazard environment is also present if penetration or rolling over the bridge railing could lead to the vehicle damaging a critical structural component of the bridge (e.g., a through-truss bridge, tied arch bridge, through girder bridge).

(2) Medium. A medium hazard environment below the bridge includes possible interruption to local transportation facilities (e.g., major collectors, minor collectors), large bodies of water used for the shipment of goods or transportation of people, and/or damage to an urban area which is not densely populated. Penetrating the railing would limit local transportation routes; however, detours would be possible and reasonable. Penetrating the railing has the possibility of causing at least one non-motor vehicle injury or fatality.

(3) Low. A low hazard environment below the bridge includes bodies of water not used for transportation, low-volume transportation facilities (e.g., local roads), or areas without buildings or houses in the vicinity of the bridge. Penetrating a low hazard railing would have little impact on regional or local transportation facilities. A low hazard railing has no buildings or facilities in the area which present possible non-motor vehicle related victims of a rail penetration.

3. Recommended Test Level. If the total encroachment adjustments (f_{TOT}) in the risk assessment do not exceed 10, enter the nomograph in Figure 12.25 for the applicable hazard environment. Plot the modified lifetime encroachment per 1,000 ft of bridge edge ($N_{MOD\ ENCR}$) and the percent trucks (T) to ascertain the appropriate test level for the bridge railing. A bridge railing meeting the test level determined using this method provides a solution where the risk of a severe or fatal injury crash during the design life of the bridge railing is estimated to be less than 0.01 for the specific conditions evaluated.

If the point plots above the dashed risk boundary line, the appropriate test level cannot be determined by this method for the given conditions.

4. Risk Boundary Line. The dashed line in Figure 12.25 indicates the point where even a MASH TL-5 bridge railing does not satisfy the design risk criteria. However, a point plotting above the risk boundary line should not be assumed to indicate that a TL-6 bridge railing should be used. A plot above the boundary can be interpreted in several different ways including:

- The assumptions upon which the risk assessment was developed may have been violated,
- There are traffic or roadway conditions that may need to be examined more closely before making a bridge railing test level selection, or
- A TL-6 bridge railing may be appropriate.

If the method's assumptions can be confirmed to be met, consider the following options to improve the conditions so they plot below the risk boundary line (i.e., TL-5 or lower is recommended):

- Reduce the traffic operational conditions (i.e., ADT and percent trucks).
- Modify the geometry and roadway characteristics (e.g., horizontal curvature, grade, etc.) to reduce large adjustments to the N_{ENCR}.

While a MASH TL-6 bridge railing might be appropriate for some conditions that plot above the risk boundary line, there is no guarantee that the use of a TL-6 bridge railing will satisfy the risk criteria because the excessive risk may be a result of very high traffic volumes and passenger vehicle redirection-rollovers which probably are not improved with a TL-6 bridge railing.

EXAMPLE 1: Justification for Alternate TL-4 (from Standard TL-5)

Select the test level for the right outside railing on a bridge with the following characteristics:

GIVEN:

- Bridge is on a four-12 ft lane, divided highway.
- Bridge is on a section of the highway that has a 3% downgrade stations ahead.
- Bridge is on a curve to the left looking stations ahead with radius of 2600 ft.
- Bridge crosses a river that has water 15 ft deep. The bridge deck is 45 ft above water.
- Estimated open to traffic year bidirectional ADT = 10,000.
- Percent trucks = 10%.
- Design speed = 50 mph.
- Number of access points = 0

SOLUTION:

Lifetime Encroachments per 1000 ft of Bridge Railing (Table 12.14): $N_{ENCR} = 9.7$

Encroachment Adjustments (Table 12.15): $f_{TOT} = f_{ACC} \times f_{LN} \times f_{LW} \times f_G \times f_{HC} \times f_{DS}$
$= 1.00 \times 1.00 \times 1.00 \times 1.25 \times 1.00 \times 1.18 = 1.48$

Modified Total Number of Encroachments: $N_{MOD\ ENCR} = f_{TOT} \times N_{ENCR} = 14.4$

Hazard Environment (Section 12.11.D.2.d): Low - bridge crosses water not used for transportation, does not cross other transportation facilities.

Test Level Selection Nomograph (Figure 12.25): <u>Test Level = TL-4</u> (alternate test level requires authorization)

EXAMPLE 2: Justification for Alternate TL-3 (from Standard TL-5)

Select the test level for the left railing on a bridge with the following characteristics:

GIVEN:

- Bridge is on a two-11 ft lane, undivided roadway.
- Bridge is on a section of the roadway that has a 1.5% upgrade stations ahead.
- Bridge is on a tangent.
- Bridge crosses a stream that has water 3 ft deep. The bridge deck is 15 ft above water.
- Estimated open to traffic year bidirectional ADT = 5,000.
- Percent trucks = 5%.
- Design speed = 45 mph.
- Number of access points = 1 Tee intersection

SOLUTION:

Lifetime Encroachments per 1,000 ft of Bridge Railing (Table 12.14): $N_{ENCR} = 3.4$

Encroachment Adjustments (Table 12.15): $f_{TOT} = f_{ACC} \times f_{LN} \times f_{LW} \times f_G \times f_{HC} \times f_{DS}$
$= 1.50 \times 1.00 \times 1.05 \times 1.00 \times 1.00 \times 1.42 = 2.24$

Modified Total Number of Encroachments: $N_{MOD\ ENCR} = f_{TOT} \times N_{ENCR} = 7.6$

Hazard Environment (Section 12.11.D.2.d): Low - bridge crosses water not used for transportation, does not cross other transportation facilities.

Test Level Selection Nomograph (Figure 12.25): Test Level = TL-3 (alternate test level requires authorization)

EXAMPLE 3: Justification for Alternate TL-4 (from Standard TL-5)

Select the test level for the left outside railing on a bridge with the following characteristics:

GIVEN:

- Bridge is on a four-12 ft lane, divided highway.
- Bridge is on a section of the highway that has a 4% upgrade stations ahead.
- Bridge is on a tangent.
- Bridge crosses a river that has water 15 ft deep. The bridge deck is 45 ft above water.
- Estimated open to traffic year bidirectional ADT = 15,000.
- Percent trucks = 10%.
- Design speed = 55 mph.
- Number of access points = 0

SOLUTION:

Lifetime Encroachments per 1,000 ft of Bridge Railing (Table 12.14): $N_{ENCR} = 10.9$

Encroachment Adjustments (Table 12.15): $f_{TOT} = f_{ACC} \times f_{LN} \times f_{LW} \times f_G \times f_{HC} \times f_{DS}$
$= 1.00 \times 1.00 \times 1.00 \times 1.50 \times 1.00 \times 1.18 = 1.77$

Modified Total Number of Encroachments: $N_{MOD\ ENCR} = f_{TOT} \times N_{ENCR} = 19.3$

Hazard Environment (Section 12.11.D.2.d): Low - bridge crosses water not used for transportation, does not cross other transportation facilities.

Test Level Selection Nomograph (Figure 12.25): Test Level = TL-4 (alternate test level requires authorization)

EXAMPLE 4: Confirmation of Standard TL-5

Select the test level for the right outside railing on a bridge with the following characteristics:

GIVEN:

- Bridge is on a four-12 ft lane, divided highway.
- Bridge is on a section of the highway that has a 2% downgrade stations ahead.
- Bridge is on a curve to the right looking stations ahead with radius of 1500 ft.
- Bridge crosses a river that has water 15 ft deep. The bridge deck is 45 ft above water.
- Estimated open to traffic year bidirectional ADT = 10,000.
- Percent trucks = 5%.
- Design speed = 40 mph.
- Number of access points = 4

SOLUTION:

Lifetime Encroachments per 1,000-ft of Bridge Railing (Table 12.14): $N_{ENCR} = 9.7$

Encroachment Adjustments (Table 12.15): $f_{TOT} = f_{ACC} \times f_{LN} \times f_{LW} \times f_G \times f_{HC} \times f_{DS}$
$= 4.00 \times 1.00 \times 1.00 \times 1.00 \times 1.43 \times 1.18 = 6.75$

Modified Total Number of Encroachments: $N_{MOD\ ENCR} = f_{TOT} \times N_{ENCR} = 65.5$

Hazard Environment (Section 12.11.D.2.d): Low - bridge crosses water not used for transportation, does not cross other transportation facilities.

Test Level Selection Nomograph (Figure 12.25): Test Level = TL-5 (standard test level; no authorization required)

EXAMPLE 5: Confirmation of Standard TL-5

Select the test level for the right outside railing on a bridge with the following characteristics:

GIVEN:

- Bridge is on a four-12 ft lane, divided highway.
- Bridge is on a section of the highway that has a 1% upgrade stations ahead.
- Bridge is on a tangent.
- Bridge crosses a four-lane, undivided highway with connection to multiple warehouse/distribution facilities. The bridge deck is 20 ft above the four-lane, undivided highway.
- Estimated open to traffic year bidirectional ADT = 30,000.
- Percent trucks = 30%.
- Design speed = 55 mph.
- Number of access points = 0

SOLUTION:

Lifetime Encroachments per 1,000 ft of Bridge Railing (Table 12.14): $N_{ENCR} = 11.0$

Encroachment Adjustments (Table 12.15): $f_{TOT} = f_{ACC} \times f_{LN} \times f_{LW} \times f_G \times f_{HC} \times f_{DS}$
$= 1.00 \times 1.00 \times 1.00 \times 1.00 \times 1.00 \times 1.18 = 1.18$

Modified Total Number of Encroachments: $N_{MOD\ ENCR} = f_{TOT} \times N_{ENCR} = 13.0$

Hazard Environment (Section 12.11.D.2.d): Medium - bridge crosses a local transportation facility used for the shipment of goods to and from warehouse/distribution facilities.

Test Level Selection Nomograph (Figure 12.25): Test Level = TL-5 (standard test level; no authorization required)

EXAMPLE 6: Increase of Standard Test Level from TL-3 to TL-4

Select the controlling test level for the railings on a slab bridge with the following characteristics:

GIVEN:

- Bridge is on a two-11 ft lane, undivided non-NHS highway.
- Bridge span length is 30 ft.
- Bridge is on a section of the highway that has a 4.0% upgrade stations ahead.
- Bridge is on a tangent.
- Bridge crosses a creek that has water 4 ft deep. The bridge deck is 6 ft above water.
- Estimated open to traffic year bidirectional ADT = 4,000.
- Percent trucks = 5%.
- Design speed = 45 mph.
- Number of access points = 1

SOLUTION:

Lifetime Encroachments per 1,000 ft of Bridge Railing (Table 12.14): $N_{ENCR} = 3.6$

Encroachment Adjustments (Table 12.15): $f_{TOT} = f_{ACC} \times f_{LN} \times f_{LW} \times f_G \times f_{HC} \times f_{DS}$
$= 1.50 \times 1.00 \times 1.05 \times 1.50 \times 1.00 \times 1.42 = 3.35$

Modified Total Number of Encroachments: $N_{MOD\ ENCR} = f_{TOT} \times N_{ENCR} = 12.1$

Hazard Environment (Section 12.11.D.2.d): Low - bridge crosses water not used for transportation, does not cross other transportation facilities.

Test Level Selection Nomograph (Figure 12.25): <u>Test Level = TL-4</u> (no authorization required; include risk assessment with TS&L Submission)

INTENTIONALLY BLANK

TABLE 12.14
LIFETIME ENCROACHMENTS PER 1,000 FT OF BRIDGE RAILING

	N_{ENCR} (2) (3)		
ADT (1)	**Two-Way Divided**	**Two-Way Undivided**	**One-Way**
500	0.8	1.2	1.7
1,000	1.6	1.9	3.4
2,000	3.1	3.2	6.0
3,000	4.4	3.6	8.1
4,000	5.5	3.6	9.6
5,000	6.5	3.4	10.6
6,000	7.4	3.1	11.4
7,000	8.1	2.7	11.8
8,000	8.8	2.3	12.0
9,000	9.3	2.0	12.0
10,000	9.7	1.9	11.9
11,000	10.1	1.8	11.7
12,000	10.4	1.8	11.6
13,000	10.6	1.8	LOS ≥ D (4)
14,000	10.8	1.9	
15,000	10.9	2.0	
16,000	11.0	2.1	
17,000	11.0	2.2	
18,000	11.0	2.4	
19,000	10.9	2.5	
20,000	10.9	2.6	
21,000	10.8	2.7	
22,000	10.7	2.9	
23,000	10.6	3.0	
24,000	10.6	3.1	
25,000	10.5	3.3	
26,000	10.6	3.4	
27,000	10.7	3.5	
28,000	10.8	3.7	
29,000	10.9	3.8	
30,000	11.0	3.9	
31,000	11.2	4.1	
32,000	11.4	4.2	
33,000	11.6	4.3	

	N_{ENCR} (2) (3)		
ADT (1)	**Two-Way Divided**	**Two-Way Undivided**	**One-Way**
33,000	11.6	4.3	LOS ≥ D (4)
34,000	11.8	4.4	
35,000	12.1	4.6	
36,000	12.4	4.7	
37,000	12.6	4.8	
38,000	12.9	5.0	
39,000	13.2	5.1	
40,000	13.5	5.2	
41,000	13.9	5.4	
42,000	14.2	5.5	
43,000	14.5	5.6	
44,000	14.9	5.8	
45,000	15.2	5.9	
46,000	15.6	6.0	
47,000	15.9	LOS ≥ D (4)	
48,000	16.2		
49,000	16.6		
50,000	16.9		
51,000	17.2		
52,000	17.6		
53,000	17.9		
54,000	18.3		
55,000	18.6		
60,000	20.3		
65,000	22.0		
70,000	23.7		
75,000	25.4		
80,000	27.1		
85,000	28.7		
90,000	30.4		
95,000	LOS ≥ D (4)		
100,000			
105,000			
110,000			

(1) Bidirectional traffic volume

(2) Number of encroachments is based on a flat, tangent roadway section with 12-ft lanes and speeds under 65 mph. For different roadway characteristics, apply the appropriate adjustment factors from Table 12.15.

(3) Number of encroachments is based on two lanes of traffic in each direction for divided roadways, one lane of traffic in each direction for undivided roadways, and a single lane of traffic for one-way roads and ramps. For a different number of lanes, apply the appropriate adjustment factor from Table 12.15.

(4) Level of Service "D" or worse

TABLE 12.15
SITE-SPECIFIC ENCROACHMENT ADJUSTMENT FACTORS

Access Density			Lane Width			Horizontal Curve Radius		
Number of Access Points on Bridge and within 200 ft of either end	Undivided	Divided and One-way	Avg. Lane Width (ft)	Undivided	Divided and One-way	Railing Location	Horizontal Curve Radius at Centerline (ft)	All Highway Types
0	1.00	1.00	≤ 9	1.50	1.25	Outside of Curve	≤ 950	4.00
1	1.50	2.00	10	1.30	1.15		950-1910	(2228.2 - R) / 318.3
≥ 2	2.20	4.00	11	1.05	1.03		≥ 1910	1.00
			≥ 12	1.00	1.00	Inside of Curve	≤ 950	2.00
							950-1910	(2864.8 - R) / 954.9
							≥ 1910	1.00
f_{ACC} =			f_{LW} =			f_{HC} =		
Lanes in One Direction			**Design Speed**			**Grade**		
No. of Through Lanes in One Direction	Undivided	Divided and One-way	Design Speed (mph)	Undivided	Divided and One-way	Percent Grade in Direction of Travel Adjacent to Railing (sign convention: upgrade + downgrade -)		All Highway Types
1	1.00	1.00	< 65	1.42	1.18	G ≤ -6		2.00
2	0.76	1.00	≥ 65	1.00	1.00	-6 < G < -2		0.5 - (G/4)
≥ 3	0.76	0.91	unknown			G ≥ -2		1.00
f_{LN} =			f_{DS} =			f_G =		
$f_{TOT} = f_{ACC} \times f_{LN} \times f_{LW} \times f_G \times f_{HC} \times f_{DS} =$								

Notes: 1. Base the adjustment factors on the conditions adjacent to the bridge railing of interest.

2. For median barriers, determine the adjustment factors and total adjustments (f_{TOT}) for each side of the barrier separately. Compare and use the greater of the two total adjustments (f_{TOT}).

3. If f_{TOT} > 10, use alternate TL-4 for outside bridge railings in low hazard environments and use the standard test level given in Section 12.11.B.1 for all other cases.

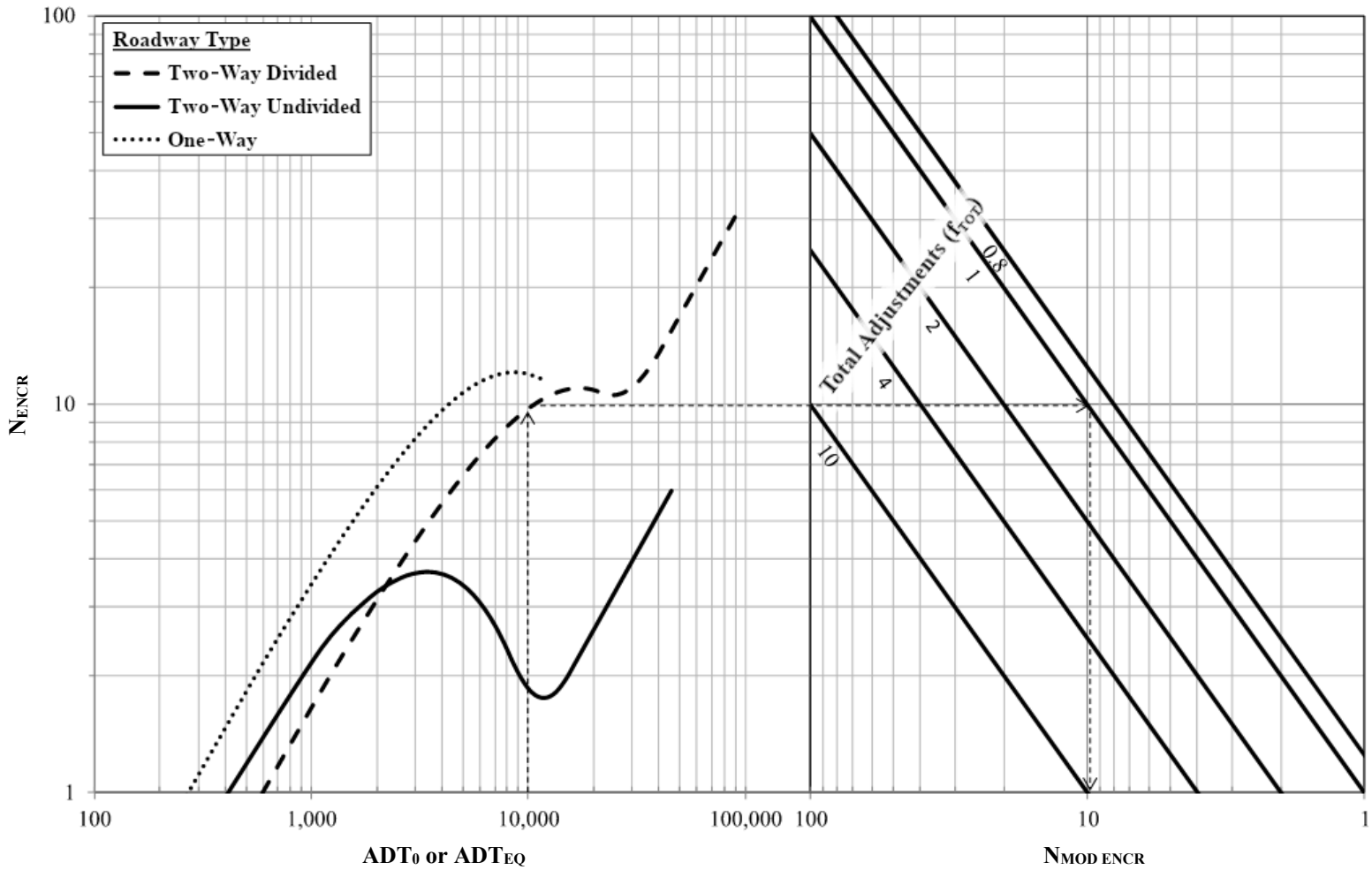

LEGEND:

ADT_0 = Anticipated Construction Year Bidirectional Traffic Volume
ADT_{EQ} = Equivalent Construction Year Bidirectional Traffic Volume
N_{ENCR} = Total Number of Encroachments
$N_{MOD\ ENCR}$ = Modified Total Number of Encroachments

FIGURE 12.24
LIFETIME ENCROACHMENTS / 1,000 FT OF BRIDGE RAILING NOMOGRAPH

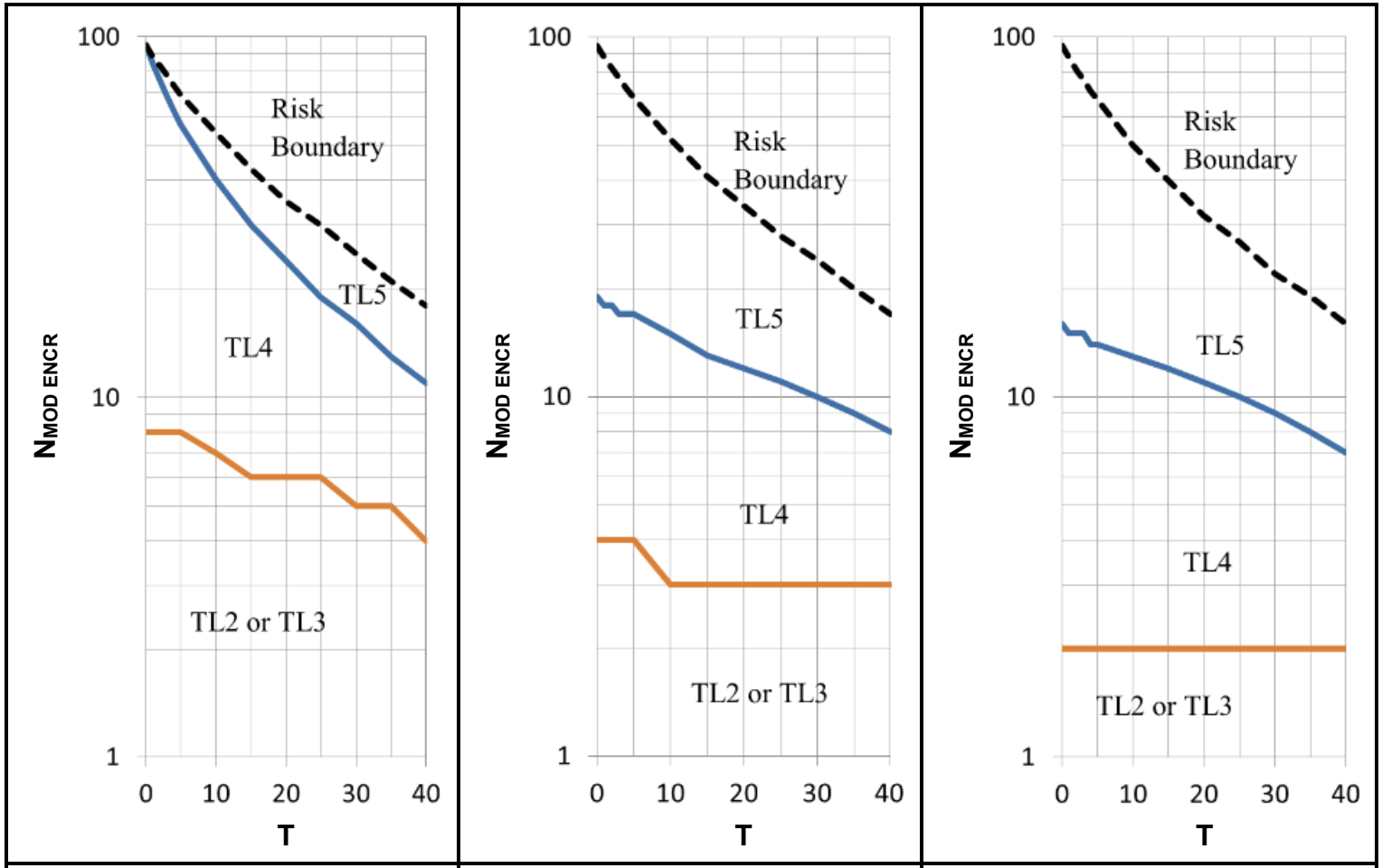

HAZARD ENVIRONMENT (Section 12.11.D.2.d)

LEGEND: $N_{MOD\ ENCR}$ = Modified Total Number of Encroachments
T = Percent Trucks

FIGURE 12.25
TEST LEVEL SELECTION NOMOGRAPH (RISK < 0.01 IN 30 YEARS FOR 1000 FT OF BRIDGE RAILING)

FIGURE 12.26
ALTERNATE BRIDGE RAILING TEST LEVEL AUTHORIZATION

I. Project Information:

County: _____ S.R.: _____ Sec.: _____ Over: _____

Local Road Name/Route No. (if not a S.R.): _____ MPMS/ECMS #: _____

BMS Struct. ID: _____ BRKEY: _____ S-Number: _____

Design Speed: _____ Construction Year ADT: _____ (Year: _____) Truck %: _____

Type of bridge work: ☐ New Bridge ☐ Bridge Replacement ☐ Superstructure or Deck Replacement
☐ Other: _____

II. Bridge Railing Information:

Standard Test Level (DM-2, Section 12.11.B): _____

Proposed Test Level (DM-2, Section 12.11.C): _____ , Location(s): ☐ Left ☐ Right ☐ Median

Case for Alternate Test Level (see DM-2, Section 12.11.C.2):

- ☐ Favorable conditions; minimal probability of severe crashes
- ☐ Compliance with sight distance requirements
- ☐ Historic bridge or contributes to historic district
- ☐ History of / potential for heavy vehicle rollovers
- ☐ Other: _____

Proposed Bridge Railing: _____ (Standard Dwg.: _____)

Justification to support approval of the proposed alternate bridge railing test level is attached, including a risk assessment (if applicable) in accordance with DM-2, Section 12.11.D.

III. Approval

The alternate test level is approved, and the proposed bridge railing may be used.

Recommended: _____ _____
District Bridge Engineer Date

Recommended: _____ _____
District Plans Engineer (or equivalent) Date

Recommended: _____ _____
ADE for Design Date

Approved: _____ _____
District Executive (or designee) Date

Retain a copy of this authorization in the permanent bridge inspection file for the life of the structure.

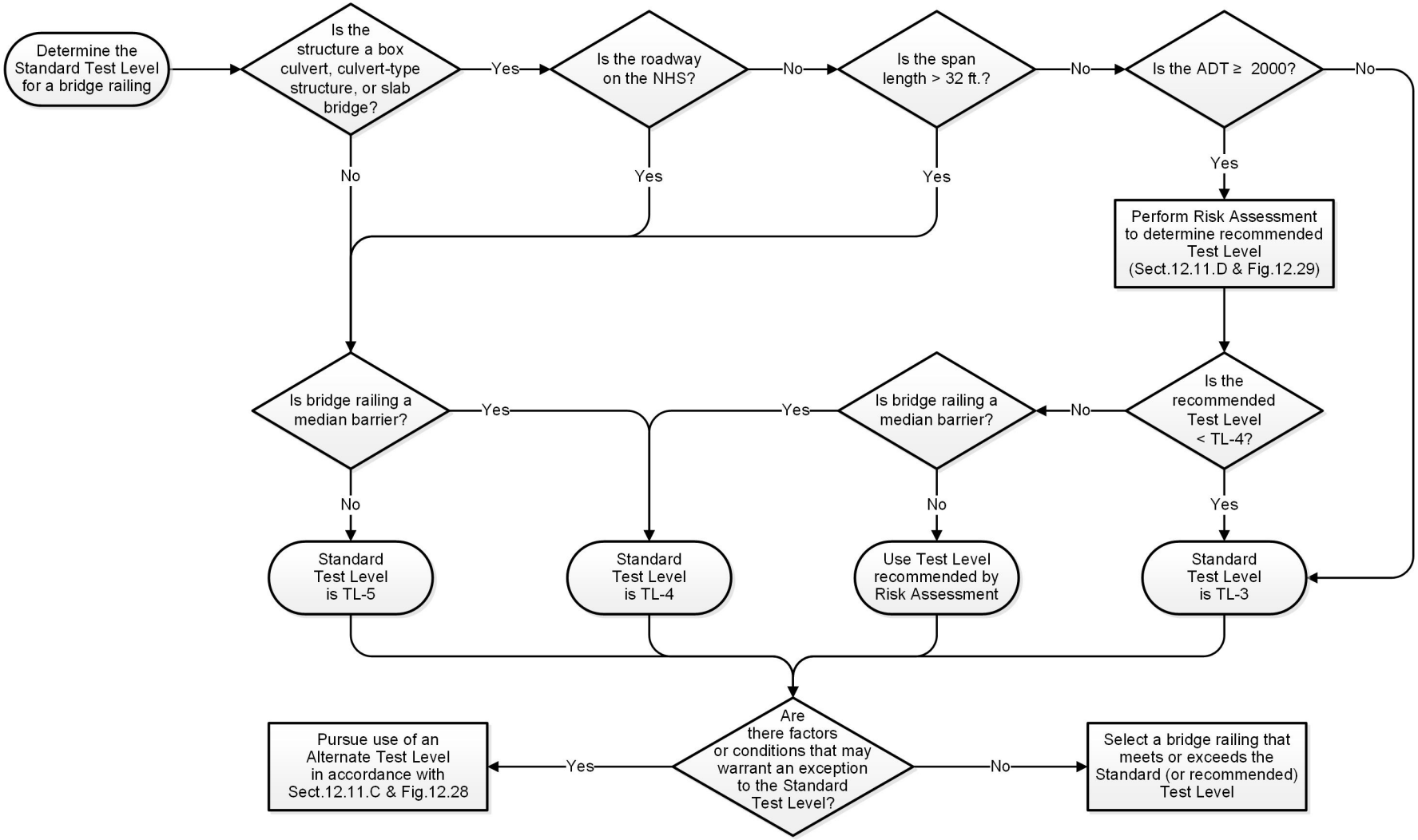

FIGURE 12.27
STANDARD BRIDGE RAILING TEST LEVELS
(Flowchart supplements Section 12.11.B)

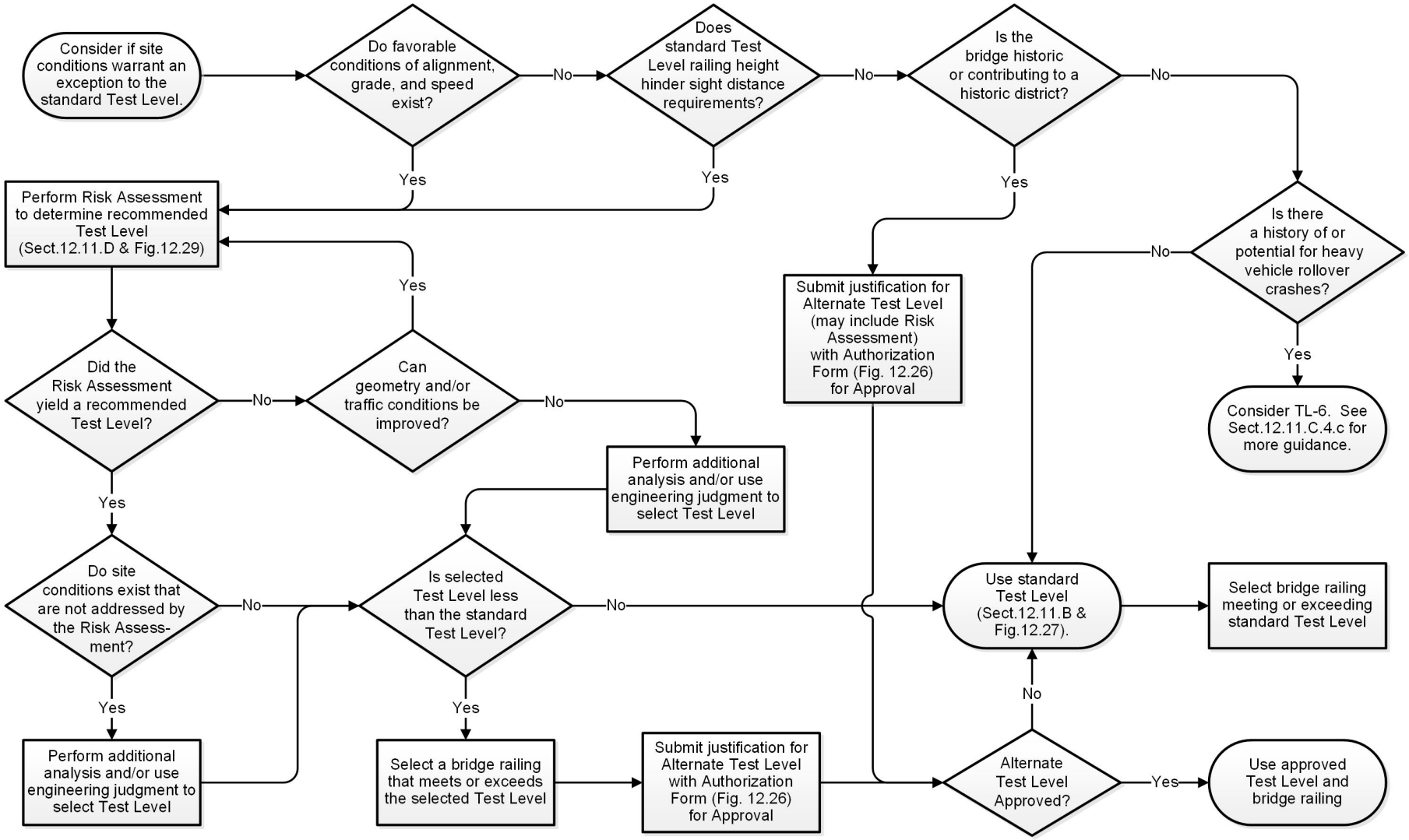

FIGURE 12.28
ALTERNATE BRIDGE RAILING TEST LEVEL SELECTION
(Flowchart supplements Section 12.11.C)

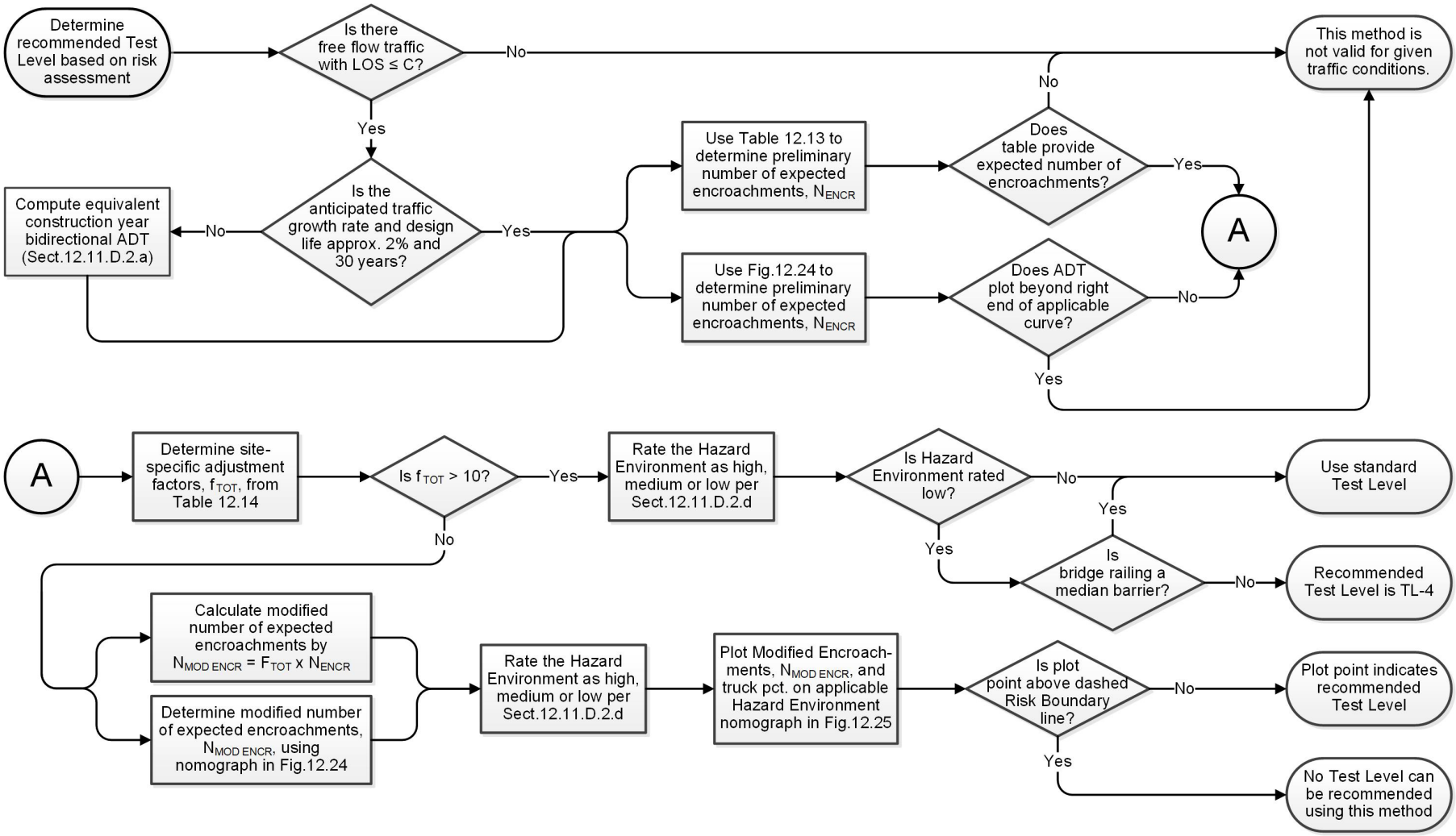

FIGURE 12.29
RISK-BASED TEST LEVEL SELECTION
(Flowchart supplements Section 12.11.D)

12.12 RUMBLE STRIPS

A. General Considerations. One of PennDOT's primary safety goals is to reduce the number and severity of lane departure crashes. A lane departure crash is defined as a crash that occurs after a vehicle crosses an edge line/centerline, or otherwise leaves the traveled way. These include run-off-road crashes, cross median crashes, and cross centerline crashes on undivided roads. Safety improvements proposed to address this goal include initiatives to keep vehicles on the roadway, to improve the likelihood of a safe recovery after a lane departure, and to reduce the severity of those crashes that do occur. Rumble strips are proven countermeasures that reduce the likelihood of cross centerline and run-off-road crashes.

There are three types of rumble strips: shoulder (SRS); edge line (ERS); and centerline (CLRS). A ***shoulder rumble strip*** is a longitudinal safety feature installed on a paved roadway shoulder near the outside edge of the travel lane. It is made of a series of milled depressions intended to alert an inattentive driver (through vibration and sound) that the driver's vehicle has left the travel lane. An ***edge line rumble strip*** is a special type of shoulder rumble strip placed directly at the edge of the travel lane preferably with the edge line pavement marking placed through the line of rumble strips. ***Centerline rumble strips*** are longitudinal features located along the centerline of the roadway. In most cases, the centerline pavement marking is placed over the rumble strip (See Figure 12.30).

1. Effectiveness. Run-off-road crashes account for approximately one-third of the deaths and serious injuries each year on the nation's highways. Rumble strips are placed as a countermeasure for driver error, rather than roadway deficiencies. They are designed primarily to assist distracted, drowsy, or otherwise inattentive drivers who may unintentionally drift over the center or edge line. Recent crash data indicates nearly 20% of lane departure fatal crashes involve an opposing direction collision. NCHRP Report 500, Volume 4, *A Guide for Addressing Head-On Collisions*, found similar statistics: 75% of head-on crashes occur on undivided two-lane roads, and most head-on crashes result from a motorist making an unintentional maneuver.

The audible and vibratory warning produced by rumble strips greatly improves the opportunity for a safe recovery. NCHRP Report 641, *Guidance for the Design and Application of Shoulder and Centerline Rumble Strips*, documents significant reductions in fatal and injury crashes, for both head-on and single run-off-road crashes, due to the use of rumble strips. In a study of 1,800 run-off-road crashes, one state found that drift-off-road crashes (due to inattentive driving) resulted in death or serious injury at a rate three to five times higher than other categories of run-off-road crashes. Where drivers do not safely recover, the warning created by rumble strips often improves driver reaction, thereby reducing crash severity.

Edge line and centerline rumble strips may also serve as an effective means of locating the travel lane during inclement weather. Fog, snow or heavy rain can obscure pavement markings and the vibration provided by rumbles can assist drivers from unintentionally crossing the edge line and centerline in these conditions. In addition to vibration, there are improved visibility benefits when the pavement marking is in the rumble strip.

Crash Modification Factors (CMFs) exist that confirm using CLRS and SRS/ERS together can reduce all crash types by over 20%. Specific crash types like head-on, run-off-road, and opposite direction sideswipe can be reduced by over 65%. A Washington State study confirms that combining CLRS and SRS/ERS is effective. Refer to the AASHTO Highway Safety Manual to determine the predicted safety impacts of using both CLRS and SRS/ERS for a specific location. At the time of this publication, PennDOT has limited data and experience with the combined impact of both CLRS and SRS/ERS to support full deployment.

2. Design. The design of rumble strips is a factor in their effectiveness. There are four basic rumble strip designs or types: milled-in, raised, rolled-in, and formed. Research indicates milled rumble strips produce significantly more vibration and noise inside the vehicle than rolled rumbles. The key design parameter related to effectiveness of the rumble strips is the dimensions, which tend to be easier to control with milled-in rather than rolled-in or formed rumbles. Optimum dimensions for milled rumble strips depend on operating conditions, cross-sectional characteristics, and potential road users. Two key dimensions that have the most effect on the alerting sound and vibration of rumble strips are depth (D) and width longitudinal to the road (C) as shown in Figure 12.30. Many crash studies evaluated center and shoulder or edge line rumble strips of 7 in wide (C) by 16 in long (B) with a depth (D) of 1/2 in.

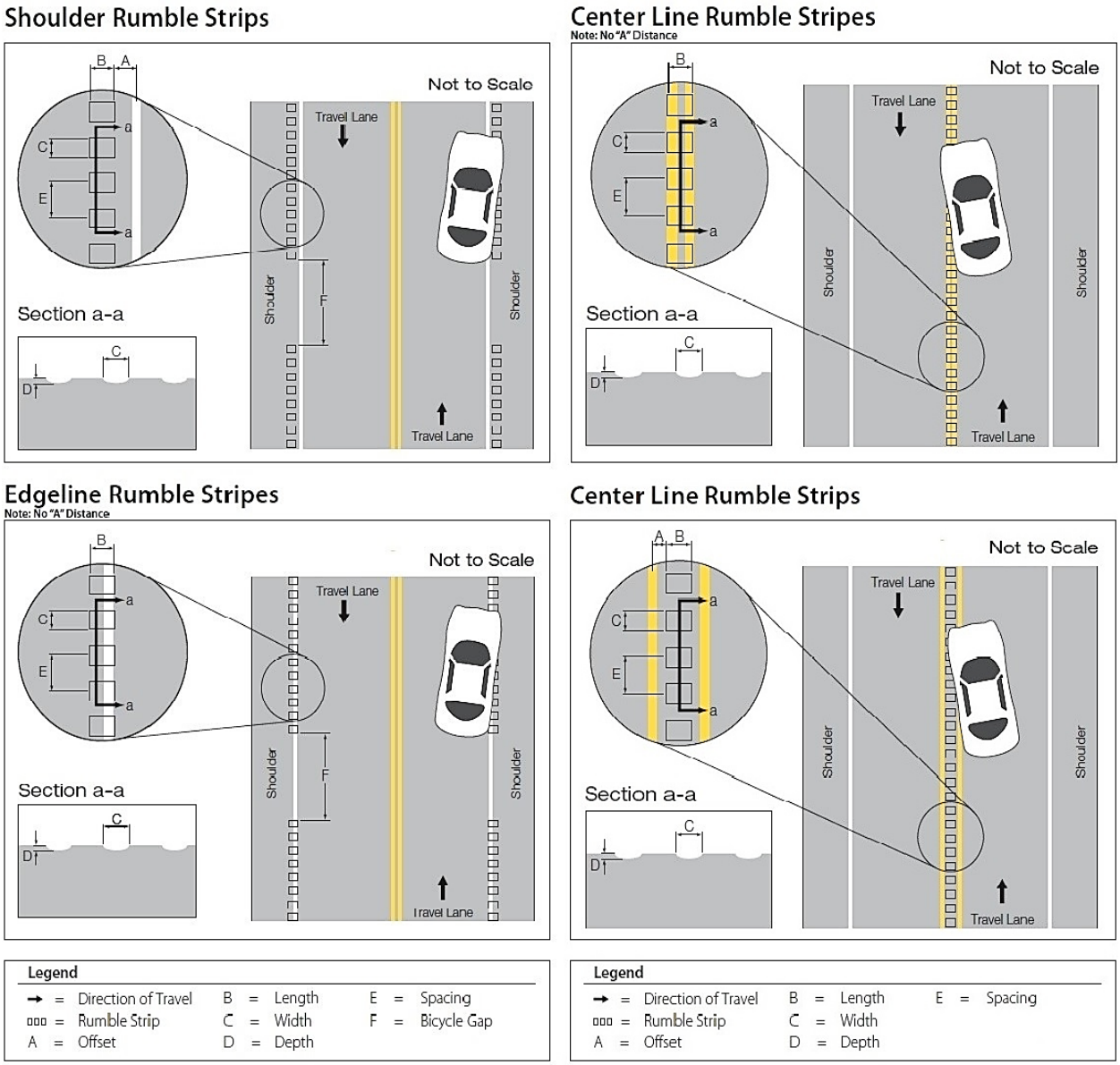

FIGURE 12.30
TYPICAL TERMINOLOGY FOR RUMBLE STRIPS

3. Location. Edge line or shoulder rumble strips with a narrow offset (A) from the travel lane have been shown to be most effective because drivers are alerted early. This is supported by research showing a significantly higher reduction in crashes on rural freeways for rumble strips with narrow or no offset, as opposed to those with 9 in or more. However, for rural two-lane roads research is inconclusive.

4. Application Considerations. CLRS/SRS/ERS should be considered as follows:

- Due to the difficulty in determining where a driver will become distracted or drowsy, it is recommended that rumble strips be installed system-wide or in corridors, prioritized by the frequency of the specific crash types targeted by the treatment.

- Implement SRS/ERS system-wide on Interstates, rural freeways, and other rural highways (i.e., systemic safety projects) with posted or statutory speeds of 50 mph or greater or where 85th percentile speeds are greater than 45 mph.

- Install SRS/ERS along rural or urban corridors where significant numbers of run-off-road crashes have been identified (i.e., location-specific safety improvement projects).

- Install SRS/ERS during any highway project with a history of run-off-road crashes or where SRS/ERS were overlaid during the paving process (e.g., reconstruction or resurfacing projects).

- Install SRS on divided highways. Shoulder rumble strips should be placed on the left shoulder as well as on the right. A comprehensive Michigan study of 1,887 drift-off freeway crashes showed that approximately an equal percentage of vehicles involved in crashes initially drifted to the left as to the right.

- Install CLRS system-wide on undivided rural roadways with posted or statutory speed limits of 50 mph or greater or where 85th percentile speeds are greater than 45 mph. CLRS should only be installed where the travel lane plus shoulder width beyond the CLRS will be at least 14 ft (i.e., systemic safety projects).

- Install CLRS along rural and urban two-lane road corridors where opposing direction crashes have been identified (i.e., location-specific corridor safety improvements) or where centerline rumble strips were overlaid during the paving process (e.g., reconstruction or resurfacing projects).

- If it is desired to install rumble strips on existing pavement, the pavement should be in sufficiently good condition, as determined by the District Pavement Engineer, to effectively accept the milling process without raveling or deteriorating the pavement. Otherwise, the pavement needs to be upgraded prior to installing the rumble strips. See Section 12.12.I for additional information regarding pavement condition for rumble strips.

The District Highway Safety Engineer is responsible for proper implementation of rumble strips. The District Pedestrian/Bicycle Coordinator should review the areas where CLRS/SRS/ERS are proposed on non-interstates and non-freeways.

For additional information, see FHWA's Technical Advisories T 5040.39 (Shoulder and Edge Line Rumble Strips), and FHWA T 5040.40 (Centerline Rumble Strips).

B. Accommodation of All Road Users. Accommodation of all road users should be considered when designing and applying rumble strips. This includes passenger and commercial vehicle drivers, bicyclists, pedestrians, and others. Flexibility is provided within this guidance to address the needs of the expected users based on the existing and projected use in the specific corridor, including bicyclists who are particularly affected by SRS/ERS. Where shoulders are available and clear, bicyclists will often choose to use them to avoid conflicts with faster moving vehicles in the travel lane.

As part of multi-modal transportation system planning, consult the District Bike/Ped Coordinator where SRS/ERS are being planned for installation. Concerns may include Bicycle PA routes, other local bike routes, national bike routes, and proposed bike routes from Metropolitan Planning Organizations (MPO)/Rural Planning Organizations (RPO).

C. Mitigation. A balance between the benefits to motorists, the noise effects on nearby residents and the potential adverse effects on the life of the pavement should be considered when installing rumble strips.

1. Noise. Citizen acceptance of a state or local agency safety countermeasure should be taken into consideration as it can affect the long-term viability of that strategy. Although rumble strips are not intended to be traversed except when a driver leaves the travel lane, rumble strip installations may cause noise complaints when there are nearby residences, particularly when issues such as high volume of large vehicles, narrow lane widths, curves, or significant passing or turning maneuvers are combined. Therefore, potential noise impacts need to be considered when contemplating the installation of CLRS/ERS/SRS in residential or built up areas. Crash history data may support installing rumble strips in locations where noise could be an issue. Some surveys have shown that informed citizens often consider the improved safety worth the nuisance noise and that residents become accustomed to the noise quickly. Mitigation may include:

- Increasing the offset (distance between the edge line and the rumble strip), particularly through curves where off-tracking is prevalent or in corridors with high volumes of truck traffic.

- Removal of the rumble strips near turn lanes or in spot locations such as a single house along a segment of roadway. The need to discontinue the use of rumble strips in spot locations should not necessarily prevent their use along a segment or corridor.

- Widening the pavement through the curve or using a "spiral transition" to reduce the likelihood of vehicles crossing the rumble strips.

- In curvilinear alignment, the potential for off-tracking should be considered. Increasing the offset of SRS/ERS may be appropriate on some curves.

- For centerline rumble strips, consider restriping the pavement to increase the usable travel lane width by reducing the shoulder width. All other options to mitigate noise issues should be evaluated before reducing shoulder width below 4 ft.

- Where corridors carry a significant volume of truck traffic, a designer should consider the larger tires on trucks. The length, width, and depth of rumble strips are critical and must not be reduced.

- In segments with CLRS and SRS/ERS, the distance between the two sets of rumble strips should be considered carefully.

- See FHWA's Safety/Roadway Departures web page for additional information on noise mitigation.

2. Maintenance. Rumble strips should be placed on pavements in good condition. Although concerns about accelerated pavement deterioration due to installation of milled rumble strips have not been proven, it is good practice to be aware of potential effects. It is common practice to locate the rumble strips at least a few inches from joints. Where there are deterioration concerns, an asphalt fog seal can be placed over milled rumble strips to reduce oxidation and moisture penetration. Application of rumble strips on preventive maintenance treatments such as thin hot mix overlay, micro-surfacing, and chip seals are discussed later in the section**.**

D. Public Involvement and Outreach. Established public involvement procedures should be followed to ensure road user and community needs are properly addressed. When rumble strips are being introduced on a large scale or in a new area, public outreach should also be considered. To position a rumble strip program for the best chance of public acceptance, agencies should:

1. Consider accommodation of all road users and the potential effects.
2. Collaborate with stakeholders.
3. Modify the application of rumble strips to the extent reasonable without losing their effectiveness.

E. Coordination with Other Roadway Improvements. An ideal time to place CLRS/SRS/ERS is in conjunction with an overlay project. Roadway sections with high numbers of head-on crashes often have multiple crash concerns involving running off the road, slippery approaches, and/or higher frequencies of crashes under periods of darkness. When one or more of these additional concerns exists, a coordinated approach may be desirable so that the overall improvement targets all concerns. This requires reviewing the crash data for these additional concerns, assessing the physical conditions in the section to determine if additional concerns should be addressed, and integrating these improvements into an overall approach.

F. Guidance on Shoulder and Edge Line Rumble Strips (SRS/ERS). SRS are installed 16 in × 7 in × 1/2 in on interstates, freeways and expressways (where bicycles are prohibited), and 16 in × 5 in × 3/8 in on other undivided two- or four-lane roads where bicycles are permitted (see Publication 72M, *Roadway Construction Standards*, RC-22M, Sheets 2 and 3). ERS are placed 8 in × 5 in × 3/8 in. It is preferable to locate ERS so that the edge line runs through the rumble strips. This increases the visibility and durability of the edge line pavement marking.

- Shoulder Rumble Strips and Edge line Rumble Strips are considered "bicycle tolerable" when they have a milled depth of 3/8 in instead of 1/2 in and a width of 5 in versus 7 in. They may be considered for installation on rural highways with a paved shoulder width of 4 ft or greater where bicycle traffic is expected. Provide full depth and width SRS/ERS on both the left and right shoulders of interstates, freeways and expressways (See Publication 72M, *Roadway Construction Standards*, RC-22M, Sheets 4 and 5).

- Use rumble strips when a Highway Safety Manual (HSM) analysis shows rumble strips can reduce crashes. The HSM considers observed crash data, traffic volumes, roadway type and roadway conditions. The HSM analysis is the best way to predict and determine how useful rumble strips (or other countermeasures) are for any specific location.

- Use SRS where the roadway lane width is 11 ft or greater with a paved shoulder width of 6 ft or greater.

- Use ERS where the shoulder width is 4 ft or more but less than 6 ft.

- Crash History data may support installing rumble strips in locations where the shoulder width is less than 4 ft or even where noise could be an issue.

- In locations where horse-drawn buggies utilize the roadway, avoid using SRS/ERS unless a crash history exists. This may be documented as a context sensitive decision. When a crash history does exist, consider using SRS/ERS and widening the shoulder to accommodate both rumble strips and horse-drawn buggies.

- Installing SRS on bituminous pavement requires a bituminous wearing course surface with BCBC base or better.

- Do not use on existing concrete pavements with a bituminous overlay less than 2.5 in thick.

- Do not install SRS/ERS on bridge decks due to the presence of rebar.

- SRS/ERS are to be broken for intersections and commercial/industrial driveways. When breaking SRS/ERS pattern, discontinue SRS/ERS 25 ft from the point of curvature of any such intersecting highway or driveway (refer to PennDOT Publication 72M, *Roadway Construction Standards*, RC-22M).

- ERS shall be discontinued 25 ft before and after adjacent guide rail where the face of the guide rail is located less than 4 ft from the edge line of the roadway.

- Coordinate the milling of SRS/ERS with all necessary project phases. Do not mill the SRS/ERS until all appropriate construction phases are completed.

- The practice of placing the edge line pavement markings over the ERS improves nighttime marking visibility, particularly in wet conditions. Coordinate the milling of ERS with traffic line painting operations:

  - To avoid milling newly applied traffic lines.
  - To install new white edge lines within two weeks of ERS completion.

- Take into consideration potential noise impacts when contemplating the installation of SRS/ERS in residential or urban areas. Avoid installing SRS/ERS on the inside of curves which are in the immediate vicinity of any residence.

- Take into consideration other users, particularly the bicyclist. Where any width of shoulder exists beyond the rumble strip and bicycles can ride, recurring short gaps should be provided (12 ft gap after every 48 ft) except for interstates, freeways and expressways (see Publication 72M, *Roadway Construction Standards*, RC-22M).

- Gap spacing should only be installed as part of new SRS/ERS installations or as part of resurfacing projects. Do not provide gaps on curves where horizontal alignment warning signs and markings are installed.

- Do not provide gaps on tangent sections where crash clusters are documented and/or at sites with the potential for reducing average crash frequency. Plans must indicate where gaps should not be provided.

- Take the location of the pavement joint into account to avoid cutting the strip across or immediately adjacent to the joint. In superelevated sections where the shoulder slopes in the opposite direction from the roadway, consideration should be given to placing the rumble strips on the superelevated side so that the driver is warned prior to crossing the slope break.

- Locate the rumble strips at least a few inches from joints to reduce any potential acceleration of pavement deterioration.

- In determining the appropriate offset, designers should consider truck traffic in the corridor and the proximity of residences, which may call for a larger offset.

G. Guidance on Centerline Rumble Strips (CLRS). CLRS may be installed on two-lane roads with traveled way widths of 20 ft or greater and on undivided multi-lane roads. CLRS are 16 in × 7 in × 1/2 in except in passing zones when the depth is reduced to 3/8 in. Many of the recommendations in the General Section and under SRS/ERS are equally applicable to installation of CLRS, including but not limited to:

- 10 ft lane widths or greater for undivided two-lane highways.

- Highways with a history of opposing flow crashes.

- Roads with speed limits over 35 mph.

- The type of pavement is a bituminous wearing course and a BCBC base or better.

- Pavement is in sufficiently good condition, as determined by the District Pavement Engineer, to effectively accept the milling process without raveling or deteriorating. Otherwise, the pavement needs upgraded prior to milling.

- Do not use on existing concrete pavements with a bituminous overlay less than 2.5 in thick.

- CLRS should not be installed on bridge decks.

- CLRS are to be broken at intersections and commercial/industrial driveways. CLRS should be discontinued 25 ft from the point of curvature of any such intersecting highway or driveway.

- Coordinate the milling of CLRS with the traffic line painting program:

  - To avoid milling newly applied traffic lines.
  - To install new yellow centerlines within two weeks of CLRS completion.

- CLRS are installed using two different spacing options depending on the width of the travel lane. When the travel lane is 11 ft wide or greater and a 3 ft wide minimum shoulder is present, CLRS are placed on either side of the centerline. When the travel lane is 10 ft minimum and little to no shoulder is provided, the CLRS will be centered over the centerline. Details for centerline rumble strips are provided in Publication 72M, *Roadway Construction Standards*, RC-22M, Sheet 1.

H. Combined SRS/ERS/CLRS. As noted previously, research elsewhere has shown that CLRS and SRS/ERS together can reduce all crash types by over 20%. The main concern when using CLRS and SRS/ERS together is the narrow travel lane restrictions and more frequent departures to one of the rumble strips. Although PennDOT has limited data and experience with the combined impact of both centerline and edge lines on the same project to support full deployment, it is encouraged to incorporate CLRS on roadways with existing ERS utilizing engineering judgment on a pilot basis. When deploying both CLRS and SRS/ERS, consider restriping the pavement to increase the travel lane width by reducing the shoulder width. When combining CLRS and SRS/ERS on two-lane roads, the remaining lane width, after the rumble strips are installed, should be 11 ft or greater with a paved shoulder width of 4 ft or greater. Highway Safety and Traffic Operations Division (HSTOD) should be consulted before CLRS and SRS/ERS are installed in combination when proposed remaining lane widths will be less than 11 ft wide.

I. Installation/Reinstallation of Rumble Strips. When considering the installation of rumble strips in existing asphalt roadways, sound engineering judgment should be used when determining if the condition of the pavement is acceptable for the installation of CLRS/SRS/ERS. See Table 12.16 for guidance on allowable rumble strip depth.

When a milling operation affects existing rumble strips, these rumble strips can be reinstalled after the wearing course has been applied. If SRS/ERS are present and the shoulder is not being milled/filled, the existing rumble strips can remain. See Section 12.12.F and Publication 72M, *Roadway Construction Standards*, RC-22M for rumble strip details.

J. Installation and Reinstallation of Rumble Strips on Thin Pavement Overlays. Thin Pavement Overlays are generally considered to be 1.5 in thick and less. In this guidance, a thin pavement overlay includes Thin/Ultra-Thin HMA/WMA overlays, chip seals, and micro-surfacing. When using this guidance, it is important to consider the roadway type (divided or undivided), traffic volume, lane/shoulder width, pavement condition, as well as the type and location of existing or planned rumble strip pattern. To avoid damage to underlying pavement, the rumble strip depths are generally kept at 3/8 in to 1/2 in depending on the overlay thickness. However, 5/8 in rumble strips can be considered if pavement thickness is adequate and a chip seal or micro-surfacing is planned within a few years to overlay the rumble strips. Rumble strips should not exceed 3/8 in depth on roadways where bicyclists are permitted.

Typical rumble strip widths are 5 in to 7 in with 12 in spacing. A typical length is 12 in to 16 in, but smaller versions should be considered for narrow two-lane roadways. The length, width, depth, and center-to-center spacing of the rumble strip should be installed in accordance with PennDOT Publication 72M, *Roadway Construction Standards*, RC-22M, "Rumble Strips." If the overlay will not affect the shoulders, the existing SRS/ERS can remain. Figure 12.31 displays an example layout of a SRS.

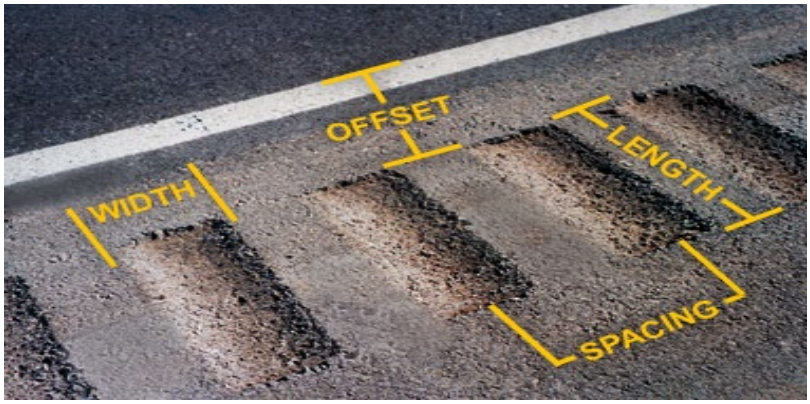

FIGURE 12.31
EXAMPLE LAYOUT OF SHOULDER RUMBLE STRIPS

1. Consideration. Existing pavements must be in good condition (Overall Pavement Index (OPI) 75 and above) to be considered for rumble strips. In general, the thickness of the most recent overlay needs to exceed the depth of the rumble strip so that the previous layers of the pavement are not exposed, allowing moisture to infiltrate and compromise their integrity. If the thickness of a thin pavement overlay is less than 3/4 in then rumble strips should not be installed or re-installed. For new rumble strips in existing thin HMA/WMA overlays, crack seal where applicable prior to installation of rumble strips.

If rumble strips exist on a roadway that is planned for a thin pavement overlay, the existing rumble strips can be filled with HMA/WMA or micro-surfacing, overlaid, and then rumble strips can be re-installed. Another option would be to mill out the rumble strips and then inlay (fill-in the milled area) before applying the thin overlay and re-installing the rumble strips. Install rumble strips immediately after the overlay operation or later as part of an area-wide project. Although a chip seal (and possibly micro-surfacing) may retain the pattern of rumble strips after its first application, most thin overlays will require re-installing the rumble strips to produce desirable noise and vibration properties. See Publication 72M, *Roadway Construction Standards*, RC-22M for rumble strip depth and location.

2. HMA/WMA Overlay. Two methods can be used when re-installing rumble strips. In the first approach, mill out the existing rumble strips (at least 20 in wide and 1 in deep), apply tack coat, and inlay with HMA/WMA before applying the overlay. Once the overlay is applied, the CLRS/ERS/SRS are re-milled. In the second method, rumble strips can first be filled with HMA/WMA, then the thin overlay is applied, and then rumble strips can be reinstalled. Districts should use engineering judgment when considering which option is best. The new rumble strips should be 3/8 in deep (if the overlay is between 3/4 in and 1 in thick) and can be 1/2 in deep (if the overlay thickness is greater than 1 in). A tack coat should be applied on milled surfaces (see Table 12.16).

3. Chip Seal. A chip seal is an application of asphalt binder on existing pavement surface, followed by placement of a layer of aggregate chips, and finally rolling with pneumatic rollers to embed the aggregate into the binder. Depending on the top size aggregate, a single layer of chip seal is usually 3/8 in thick. Chip seals can also be applied as double and triple layers, which are accomplished by applying additional layers of asphaltic material and aggregate. Rumble strips should not be applied on pavements with only a single chip seal as the only surface layer. After a second or third chip seal is applied, however, centerline, shoulder, or edge line rumble strips may be milled into the pavement surface.

Many highway agencies across the country have experienced delamination and raveling of the chip seal near the area of rumble strips. However, some States have successfully installed rumble strips provided the total chip seal application is at least 3/4 in deep. Most State highway agencies install the rumble strips before applying the chip seal. If the rumble strips are already in place, the usual practice is to place the chip seal over the existing rumble strips, and the milled rumble strip pattern may remain "as is." Research has shown that a 1/8 in reduction in the current milled rumble strip depth, because of chip-sealing, does not result in a significant reduction to the audible and tactile warnings produced by the rumble strips. In addition, the rumble strips remain functional for the life of the chip seal.

However, if the minimum groove depth cannot be achieved (e.g., after first or subsequent chip seal applications) mill out the existing rumble strips (at least 20 in wide and 1 in deep), apply tack coat, and inlay with HMA/WMA before applying the chip seal. Once the chip seal is applied (minimum 3/4 in depth), the rumble strip pattern can be re-milled (see Table 12.16).

It is best to apply a chip seal after rumble strips have been installed. Although some cross-section will be lost by the size of aggregate used, stones from the chip seal will enhance the noise and vibratory properties of the rumble strips. For new rumble strip installation, Districts may consider milling rumble strips to 5/8 in to 3/4 in depth prior to applying the chip seal.

4. Micro-Surfacing. Micro-Surfacing is a mixture of polymer modified asphalt emulsion, dense graded aggregate, mineral filler, water and other additives. The largest stone size in a micro-surfacing mix is usually No. 4 (4.75 mm) with 100% passing a 3/8 in sieve. The average thickness of a micro-surfacing application is usually 1/4 in to 1/2 in, but it can be applied at two to three times the thickness of the largest stone in the grading because of polymers.

If the existing rumble strip is deep enough and the micro-surfacing material leaves a minimum depth of 3/8 in after placement, then it is not necessary to mill out the existing rumble strips. If placement of the micro-surfacing on existing rumble strips will not provide a minimum rumble strip depth of 3/8 in, then one of two options can be considered. Existing rumble strips can be filled with HMA/WMA asphalt or micro-surfacing as a scratch course and then the entire pavement can be overlaid with micro-surfacing. Once the micro-surfacing is complete, the rumble strips can be re-milled without significant delamination. As another approach, mill out the existing rumble strips (at least 20 in wide and 1 in deep), apply tack coat, then inlay with HMA/WMA or micro-surfacing (Type B or RF, see Publication 242, *Pavement Policy Manual*) prior to applying the micro-surfacing layer. After the micro-surfacing is applied, the rumble strips can be reinstalled. Districts should use their engineering judgment and other factors to select the right approach (see Table 12.16).

INTENTIONALLY BLANK

TABLE 12.16
EXISTING RUMBLE STRIPS AND THIN OVERLAYS

Thin Overlay Type	Overlay Depth	Allowable Rumble Strip Depth	Rumble Strip Options [use engineering judgment in selecting option]
Hot-Mix or Warm-Mix Asphalt	< 3/4"	No Rumble Strips	
	3/4" – 1"	3/8"	Fill existing rumble strips with HMA/WMA, overlay the entire section and reinstall rumble strips. Or Mill out the existing rumble strips (minimum 20" wide × 1" deep), apply a tack coat to milled areas, inlay with HMA/WMA, and overlay the entire section. Reinstall rumble strips.
	>1" – 1 1/2"	1/2"	
Chip Seal	< 3/4"	No Rumble Strips	
	3/4" – 1 1/2"	3/8"	If 3/8" rumble strip depth can be maintained, apply the chip seal. If 3/8" depth cannot be maintained, mill out the existing rumble strips (minimum 20" wide × 1" deep), apply a tack coat to milled areas, inlay with HMA/WMA, apply the Chip Seal, and reinstall rumble strips.
Micro-surfacing	< 3/4"	No Rumble Strips	
	3/4" – 1"	3/8"	If 3/8" rumble strip depth can be maintained, apply the microsurface. If 3/8" depth cannot be maintained, use a scratch course to fill existing grooves with HMA/WMA or micro-surfacing, overlay, and reinstall rumble strips. Or Mill out the existing rumble strips (minimum 20" wide × 1" deep), apply a tack coat to milled areas, inlay with HMA/WMA or micro-surfacing (type B or RF), apply overlay, and reinstall rumble strips.
	> 1" – 1 1/2"	1/2"	

12.13 SAFETY EDGE

The Safety Edge is a simple but extremely effective solution that can help save lives by allowing drivers who drift off highways to return to the road safely. Instead of a vertical drop-off, the Safety Edge consolidates the edge of the pavement to a 30° taper (with a 26° to 40° construction tolerance). Research has shown this is the optimum angle to reduce or eliminate tire scrubbing and allow drivers to re-enter the roadway safely. The Safety Edge provides a strong, durable transition for all vehicles. Even at higher speeds, vehicles can return to the paved road smoothly and easily. By including the Safety Edge detail while paving, this countermeasure can be implemented system-wide at a very low cost. The Safety Edge also provides a more durable pavement edge that prevents edge raveling. FHWA's goal is to accelerate the use of the Safety Edge technology, working with States to develop specifications and adopt this pavement edge treatment as a standard practice on all new and resurfacing bituminous pavement projects.

The Safety Edge is a proven technology with the following primary benefits:

- Reduces crashes and saves lives by mitigating pavement edge drop-off
- Is a low-cost, systematic improvement applied during paving
- Improves durability by reducing edge raveling
- Reduces tort liability

The Safety Edge is formed during a bituminous paving operation using a special removable wedge shaped shoe or end gate attached to the paver. See Publication 72M, *Roadway Construction Standards*, RC-25M for Safety Edge details.

The Safety Edge is to be used as a standard pavement edge treatment on the outside edge of bituminous pavements and shoulders for both wearing and binder courses having a depth of 1.5 in and greater. The total depth of the Safety Edge should not be more than 5 in.

The Safety Edge should not be included in urban typology projects where curb and sidewalk are encountered and it should not be used for base, leveling, or scratch courses at this time.

The Safety Edge is considered incidental to the paving course being placed and will result in an approximate 1% increase in the HMA/WMA material quantity. For tonnage items the 1% increase must be added to the project quantities.

The Safety Edge must be added to projects that meet the above guidelines via special provision N-a13401-A. The special provision specifies an **adjustable** Safety Edge device to prevent roll up of the edge. Fixed devices extrude the edge at a 30° angle, but after rolling, the angle of the edge may not meet the 40° maximum angle requirement. All pilot projects that used adjustable devices met the edge angle criteria.

No special preparation of the shoulder is required when placing the edge only on the final wearing course. However, preparation of the granular shoulder prior to placement is incidental to the paving items for wearing and binder courses. The incidental preparation work should be minor. Keep in mind that the asphalt material is incidental to the paving item. Thus, if more extensive prep work is required to prepare the shoulder area to address washouts or large drop-offs, the designer should include a separate item in the contract or work with County Maintenance Organizations to prepare the shoulders in advance of the project.

Shoulder backup is still to be placed with the Safety Edge as in the past with the traditional vertical edge.

The Safety Edge is not to be used as a longitudinal joint (i.e. lane to lane). A vertical or notched wedge joint for longitudinal joints is used as per Publication 408, *Specifications*, Section 409.

CHAPTER 12, APPENDIX A

RESERVED FOR FUTURE USE

CHAPTER 12, APPENDIX B

GATE BARRIER SYSTEMS

GATE BARRIER SYSTEMS
APPROVED SYSTEM
(Publication 13M, Design Manual Part 2 (DM-2), Chapter 12)

Device: The BarrierGate

Category: Gate Barrier Systems

Reference: DM-2, Chapter 12, Section 12.6.E

Description: The BarrierGate (NCHRP 350 approved, Test Level 3 (TL-3), FHWA Eligibility Letter B-25) is a proprietary longitudinal nongating barrier which opens to provide a 40 ft or 26 ft wide opening for controlled access through barrier openings.

The outermost ends of the gate assembly are equipped with transition assemblies that attach to custom concrete median barrier (CMB) sections.

The movement of the gate assemblies is directed by track assemblies anchored to a concrete foundation and guide rail assemblies anchored to the tops of the concrete transition assemblies.

The BarrierGate is a proprietary system, and as such, must be purchased or obtained through competitive bidding with an equally suitable alternate gate barrier system.

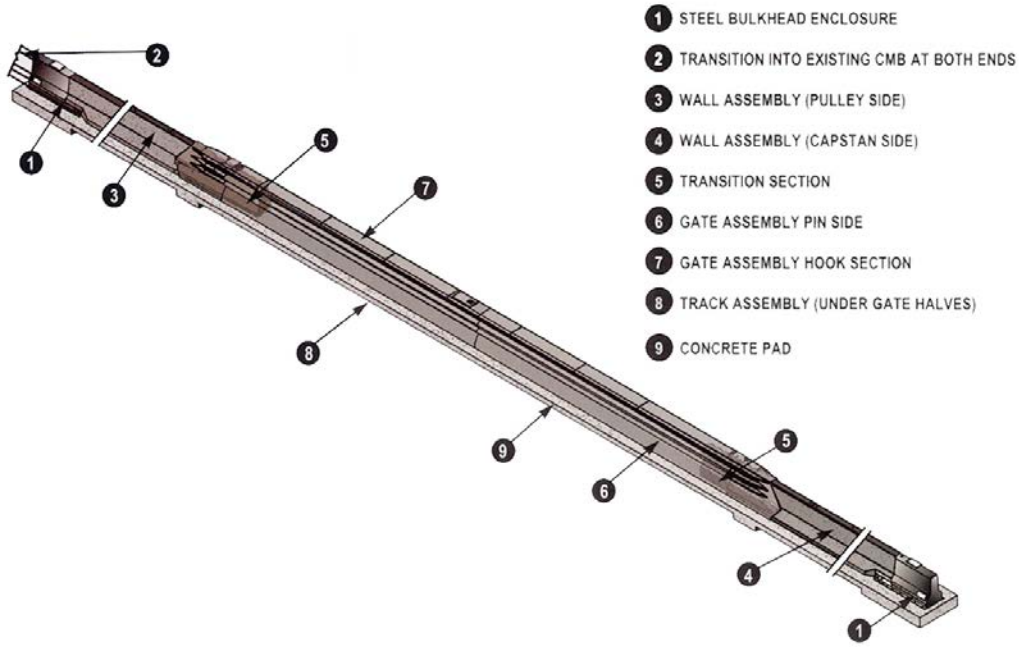

GATE BARRIER SYSTEMS
APPROVED SYSTEM
(Publication 13M, Design Manual Part 2 (DM-2), Chapter 12)

Device: The ArmorGuard Gate

Category: Gate Barrier Systems

Reference: DM-2, Chapter 12, Section 12.6.E

Description: The ArmorGuard Gate (NCHRP 350 approved, Test Level 3 (TL-3), FHWA Eligibility Letter B-87) is a proprietary longitudinal nongating barrier specifically designed to span a permanent opening in a concrete median barrier ranging from 26 ft to 52 ft long. The ArmorGuard Gate is a heavily reinforced steel barrier that is designed for emergency openings. The typical length of each gate section is 13 ft and the effective overall height is 33 in. The ArmorGuard Gate is 28 in wide at its base.

The ArmorGuard Gate is a proprietary system, and as such, must be purchased or obtained through competitive bidding with an equally suitable alternate gate barrier system.

GATE BARRIER SYSTEMS
APPROVED SYSTEM
(Publication 13M, Design Manual Part 2 (DM-2), Chapter 12)

Device: The Vulcan Gate

Category: Gate Barrier Systems

Reference: DM-2, Chapter 12, Section 12.6.E

Description: The Vulcan Gate (NCHRP 350 approved, Test Level 3 (TL-3), FHWA Eligibility Letter B-134C) is a proprietary longitudinal nongating barrier specifically designed to provide an emergency opening in a concrete median barrier. The median openings range from 27.17 ft for a two-section Vulcan Gate (V2000) to 81.04 ft for a six-section Vulcan Gate (V6000).

A typical Vulcan Gate system is comprised of existing Vulcan segments, two tested and accepted transitions to concrete median barrier, and two hinge segments. The hinges may also be used in a run of Vulcan barrier to create a gate opening.

The Vulcan Gate is a proprietary system, and as such, must be purchased or obtained through competitive bidding with an equally suitable alternate gate barrier system.

CHAPTER 12, APPENDIX C

TEMPORARY BARRIERS

TEMPORARY BARRIERS
APPROVED SYSTEM
(Publication 13M, Design Manual Part 2 (DM-2), Chapter 12)

Barrier: PennDOT F-Shape Temporary Concrete Barrier

Category: Temporary Barrier - Concrete

Reference: DM-2, Chapter 12, Section 12.10.D

Description: The PennDOT F-Shape Temporary Concrete Barrier (NCHRP 350 approved, Test Level 3 (TL-3), FHWA Eligibility Letter B-79) is a 34 in high modified F-shape portable barrier in segment lengths of 12 ft. The use of a 5 in vertical reveal in lieu of the standard 3 in dimension increases the total barrier height to the 34 in noted above and raises the slope break-point to 12 in. The base width is 24 in and the barrier tapers to a 9 in top width.

The connection between segments is a 12 in long × 27 in high × 0.5 in thick steel plate that fits loosely into a vertical slot formed into the end of each segment. The segments are tightly butted together during installation.

The tested deflection (working width) of PennDOT's F-Shape Temporary Concrete Barrier was crash tested to be 8.4 ft. (Refer to DM-2, Chapter 12, Section 12.4.D for the definition of working width.)

For the PennDOT F-shape temporary concrete barrier with steel plate and vertical slot, refer to archived construction details on the Department's website for Publication 72M, *Roadway Construction Standards*, June 2010 Edition. These archived construction details appeared in the following Standard Drawings:

- RC-57M: Concrete Median Barrier (recommended June 1, 2010); and
- RC-59M: Concrete Glare Screen (recommended June 1, 2010).

TEMPORARY BARRIERS
APPROVED SYSTEM
(Publication 13M, Design Manual Part 2 (DM-2), Chapter 12)

Barrier: Single Face Concrete Barrier

Category: Temporary Barrier - Concrete

Reference: DM-2, Chapter 12, Section 12.10.D

Description: Single face concrete barrier is never appropriate for temporary barrier or roadside (shoulder) barrier unless the barrier has full back support as shown in Publication 72M, *Roadway Construction Standards*.

Single face concrete barrier may be used if it is part of a moment slab. Design details should be approved by the Department prior to inclusion in the project plans.

BLANK PAGE

CHAPTER 12, APPENDIX D

RESERVED FOR FUTURE USE

BLANK PAGE

CHAPTER 12, APPENDIX E

Roadside Barriers and End Treatments Checklist and Documentation for Non-Standard Condition

E.1 Non-Standard Condition Documentation

The Non-Standard Condition Documentation in this Appendix documents the reasons for not meeting policy and/or standards. Typically, one Non-Standard Condition Document is used for each non-standard location, so one project may have more than one Non-Standard Condition Documentation. However, several non-standard conditions for the same project may be documented on the same Non-Standard Condition Document where these non-standard conditions are created throughout the project by the same reason, such as lack of right-of-way, topography, or environmental concerns. A representative sketch/picture (Page 12E-5) will need to be included when combining non-standard conditions for each reason. For example, if right-of-way is the reason for lack of grading behind an impact attenuator at a number of locations on the same project, then only one sketch/picture will be required. If another issue/reason is also present at a number of locations on the same project, then another sketch/picture will need to be included to capture that reason. This documentation is not required when not meeting best practices or "desired" conditions. A template for the Non-Standard Condition Documentation can be found in the Engineering and Construction Management System (ECMS) file cabinet.

E.1.A Situations Requiring Non-Standard Condition Documentation

Where safety hardware cannot reasonably be designed/installed to meet current policy in DM-2, Chapter 12 and/or the RC Standards (RC-50M series), the Non-Standard Condition Documentation in this Appendix must be completed.

Reasons may include unavailability of standard hardware, topography, right-of-way constraints, or other field conditions. The Engineer should consider these reasons, along with ADT and crash data, to develop an alternative strategy.

Project scope may determine when existing site constraints justify the use of a non-standard condition. In certain situations, existing site constraints may justify the use of a design that is not standard but may provide a safer condition.

The following are example situations which are applicable:

1. Length of Need less than required
2. Flare rates less than required
3. Guide Rail located beyond slope break point
4. High-Tension Cable Median Barrier not located according to this Chapter
5. Inappropriate end treatment selection and/or installation, such as inadequate grading or curb

Note: Non-Standard Condition Documentation is not required for temporary work during construction.

E.1.B Timing of Documentation for Non-Standard Condition

All known non-standard conditions must be documented in design when the guide rail is designed. The Non-Standard Condition Documentation must be attached along with the Roadside Barrier Checklist to the Project Development Checklist in the ECMS as not available to the contractor, but available for the Department Construction staff.

Non-standard conditions already documented in design do not need to be documented again in construction. However, if there is a modification to the condition, if a new non-standard condition is discovered, or there is a modification to the plan during construction, then the Construction Unit should consult with the Design Unit to review the change and evaluate the need for Non-Standard Condition Documentation.

If during construction it is determined that an already completed non-standard condition is determined to be no longer needed, then the Non-Standard Condition Document must be removed from ECMS.

E.1.C Retention of Non-Standard Condition Documentation
The Non-Standard Condition Documentation and applicable attachments, including the Checklist, must be retained in Enterprise Content Services (ECS). The documentation must be retained until at least 2 years after the non-standard condition has been removed.

E.2 Roadside Barriers and End Treatments Checklist

The Roadside Barriers and End Treatments Checklist assists both designers and field personnel to verify the design and installation with consistency to standards and design policy. The Design Checklist portion is to be completed by design staff, and the Construction Checklist portion must be completed by the appropriate construction personnel. The checklist can be used as a guide to help follow the standards and design policy, as well as documenting the reasons for implementing non-standard conditions.

If the answer is "No" to a question on the checklist, the Non-Standard Condition Documentation is usually required (when DM-2 policy or Publication 72M (RC Standards) are not being followed), as described below. However, some questions are regarding best practices and "desired" conditions, and, therefore, do not require the Non-Standard Condition Documentation for a "No" answer.

E.2.A When is the design portion of the Roadside Barriers and End Treatments Checklist required?
The design portion of the Roadside Barriers and End Treatments Checklist in this Appendix must be completed for all projects which include new installations and replacements of roadside safety hardware (guide rail, end treatments, concrete barrier, etc.). For minor complexity projects and projects which do not have R/W acquisition as part of the scope of work, the checklist should be part of the safety review submission. For Moderate and Major complexity projects and projects that have R/W as part of the scope of work, the checklist should be submitted as part of Design Field View (DFV) submission. One checklist should be completed for each project. The design portion of the checklist should be periodically reviewed, and a final version submitted with the PS&E submission.

E.2.B When is the construction portion of the Roadside Barriers and End Treatments Checklist required?
The construction portion of the Roadside Barriers and End Treatments Checklist in this Appendix must be completed for all projects which include roadside safety hardware work (guide rail, end treatments, concrete barrier, etc.) and where the design portion has already been completed. Refer to the *Project Office Manual*, Publication 2, Section C.6.13, for further construction requirements.

E.2.C How does Construction personnel get the checklist?

Once the design portion of the checklist has been completed, it is to be uploaded into ECS and included in the Project Development Checklist in ECMS in a manner in which it is not available to the contractor, but it is available to Department construction staff.

E.2.D Retention of the Checklist

Once the Checklist has been completed by construction, it is to be uploaded into the PennDOT Project Collaboration Center (PPCC) for retention. If a non-standard condition is indicated on a Checklist which triggers the Non-Standard Condition Documentation, then the Checklist is to be attached to and retained with each completed Non-Standard Condition Document.

E.3 Quality Assurance Reviews

The Highway Design and Technology Section will conduct periodic QA reviews of a sampling of Checklists and Non-Standard Condition Documentation.

ROADSIDE BARRIERS AND END TREATMENTS

Non-Standard Condition Documentation

PROJECT INFORMATION

District: County: Municipality: Project ECMS #:
SR: Section: Station start: Station end:
Begin Segment: Begin Offset: End Segment: End Offset: Left/Right:
ADT: Main Road: Side Road (if applicable):
What is the obstruction? _____
Is it reasonable to have the obstruction? ☐ Removed ☐Relocated ☐Neither [document reason below]
_____
_____

Document Reasons for Non-Standard Design and/or Installation [Indicate why issues cannot be addressed to use a standard device]

☐ Topography [Document details such as steeper slopes, etc.]
☐ Limited Right-of-Way (ROW) [If documenting a Non-Standard Condition during Design, need to justify why it's not feasible to acquire ROW.]
☐ Driveway/side road intersecting the main road is too close to a bridge or other hazard where a full run of barrier or end treatment cannot be installed. [Is closing/relocating access point/structure feasible?]
☐ Utility/building conflicts
☐ DM-2 and/or RC standards do not address the specific condition. For example, attachment/transitions details shown in the RC standards not applicable to existing bridge barrier
☐ Other _____
(Note: Designer may attach a sheet to indicate multiple locations where a non-standard condition occurs.)

Design/Construction Alternatives Considered (use attachment if more space is needed)	**Why Alternative Was Not Selected**
1)	
2)	
3)	
4)	

Selected Alternative - Sketch/Picture below or attach

Selected Alternative Description (Include what is not consistent with DM-2 / RC Standards) and Justification

Provide signatures below for concurrence and approval

Design Phase

_____ _____
Designer - Recommendation Date

_____ _____
Guide Rail Mentor - Concurrence Date

_____ _____
ADE-Design or Designee - Approval Date

If Changes Made During Construction

_____ _____
Inspector-In-Charge - Recommendation Date

_____ _____
Guide Rail Mentor - Concurrence Date

_____ _____
ADE-Design or designee - Approval Date

Attach Roadside Barriers and End Treatments Checklist

ROADSIDE BARRIERS AND END TREATMENTS DESIGN & CONSTRUCTION CHECKLISTS

SR: _____ Section: _____ County: _____ Project ECMS#: _____

The following checklists (design & construction) are developed to assist the designer and field personnel to verify design and installation accuracy and consistency with design policy and standards and to document any variances and alternatives considered. However, these checklists should not be considered all inclusive. There may be other factors in DM-2 or standards that the designer may wish to consider. Please mark the appropriate answer for each question. **Any "No" must be discussed in the remarks section on the last page**.

Notes: Items marked with a * may not trigger a non-standard condition document. The items marked with double ** are required and if not done would require documentation in the project files; however, non-standard documentation is not required.

THIS PORTION IS TO BE COMPLETED DURING DESIGN

Completed By: _____ Date: _____

Reviewed/Approved by Designer: _____Date: _____

Guide Rail [If guide rail is not involved, check NA____ here and move to next section]

NO.	QUESTION	Y	N	N/A
1*	If reasonable, have obstructions been removed, relocated or made breakaway (removing the need for guide rail)?			---
2	Does the guide rail have the minimum unobstructed/deflection distance noted in DM-2, Table 12.4 and RC-54M?			---
3	Is the final height of guide rail compliant with DM-2, Table 12.4 and RC-51M/RC-53M?			---
4	Is the proposed design for short radius curves per DM-2, Section 12.4 and as shown on RC-54M?			
5	Is the guide rail placed prior or at the slope break point?			---
6	Are the appropriate lengths of posts provided per DM-2?			---
7	Is the slope behind and/or in front of the guide rail post 10:1 or flatter per DM-2?			---
8*	Is any guide rail run ending within 200 feet of the start of another guide rail run made continuous, unless there is an access point in between the two runs, per DM-2?			
9*	If there are short lengths of existing guide rail, was consideration given to removing them since these sections are often less effective than no barrier at all per DM-2?			
10	Is the required length of need to shield the obstruction provided per DM-2?			---
11	If there is a curb, is the curb flush with the face of guide rail per DM-2 and as shown on RC-51M (excluding sidewalk)?			
12	If the curb exceeds a height of 4 inches, is the guide rail stiffened per DM-2?			
13	If posts are omitted due to an underground structure or utility, is the system in compliance with DM-2 and RC-51M?			

NO.	QUESTION	Y	N	N/A
14	Is the obstruction delineated per TC-8600 series standards if other alternatives are not practical or cost effective?			
15**	If this is a federal oversight construction project or an Interstate and Expressway construction project, was a standard special provision for pre-installation review of roadside barrier and end treatments included in the contract documents as required by DM-1C?			

End Treatments & TSS [If none are involved, check NA____ here and move to next section]

NO.	QUESTION	Y	N	N/A
1	Is the appropriate crashworthy end treatment (e.g., energy absorbing or non-energy absorbing, gating or non-gating) specified considering the site and traversable area behind the barrier per DM-2?			
2	Is the designed grading platform adequate as shown on RC-54M?			
3	Are turndowns, strong post anchor terminals, and/or TSSs used in accordance with DM-2, Section 12.4, or RC-54M for TSS?			

Concrete Barrier [If concrete barrier is not involved, check NA____ here and move to next section]

NO.	QUESTION	Y	N	N/A
1	Is the final barrier height in compliance with DM-2, Section 12.3?			---
2	Does the design of precast concrete barriers on tight curves exceed the minimum radius of 450 feet for a 12-foot barrier segment length?			---
3	Does the concrete barriers design meet DM-2 and RC standards? (shape, taper rate, height transition, embedment, etc.)			---
4	Are any median barriers ending within 1,000 ft of existing median barrier connected to eliminate the gap, excluding intersections and access points?			

High-Tension Cable Median Barrier [If HTCMB is not involved, check NA____ here and move to next section]

NO.	QUESTION	Y	N	N/A
1	Preferably, HTCMB should be placed on uniformly flat grading (10:1) in accordance with DM-2. If not, is the HTCMB placed on a 4:1 or flatter slope?			---
2	Does HTCMB design provide the appropriate deflection area as per DM-2?			---
3	The preferred offset for HTCMB is 12 ft or more from the edge of the travel lane. Is the HTCMB placed at least 10 ft from the travel lane?			---
4*	Is the designed HTCMB run less than the maximum recommended length of 1 mile?			---
5	Is the HTCMB placed at least 8 ft away from bottom of the ditch?			---
6	Is the HTCMB not placed 4' to 20' from hinge point when median is steeper than 6:1?			---
7*	Is the end anchor preferably placed in a location unlikely to be hit? (when anchor is hit, entire system may collapse).			---
8*	When practical, is the cable median barrier placed on the inside of horizontal median curves instead of the outside?			---

Transitions [If transitions are not involved, check NA____ here and move to next section. If any item between 2-6 are checked, you must send the completed documentation to the District Bridge Unit]

NO.	QUESTION	Y	N	N/A
1	Are non-bridge transitions between different barrier heights, different types of barriers (e.g., guide rail to concrete barrier), and different stiffnesses (e.g., weak post to strong post guide rail or 31-S to 31-SCC) designed per DM-2 and as shown on RCs?			
2	Is adequate stiffening provided whenever guide rail is connected to a bridge barrier or another rigid object as shown on RC-50M?			
3	If standard bridge to roadway barrier transitions (as shown on the RCs or per DM-2, Appendix A) are not utilized, does the transition have 1) a gradual stiffness and height transition between the bridge end and the approach guide rail, 2) an adequate attachment to the bridge barrier itself, and 3) the elimination of any potential snag points at the bridge end?			
4*	For guide rail connections to existing bridge barriers, is the bridge barrier modified/strengthened to provide a stronger connection to prevent the approach transition from pulling free from the bridge barrier?			
5*	If the existing bridge barrier is not structurally adequate to support a connection, was extending the guide rail across the structure considered?			
6*	If a standard transition and end treatment cannot be provided to protect a bridge barrier because of lack of space (for example, due to an intersecting roadway), was a crash cushion considered?			

Bridge Barrier [If bridge barrier or paving on bridge is not involved, check NA____ here and move to Remarks section]

NO.	QUESTION	Y	N	N/A
1	Will the final height of the bridge barrier be at least 29 inches after an overlay is placed on the bridge or if the bridge barriers are included in a rehabilitation project?			---

Remarks: For all questions where the answer was "NO", discuss and attach a sketch as applicable. Indicate questions #'s which are discussed. Any "NO" which indicates that DM-2 policy or RC Standards are not being met must complete the Non-Standard Condition Documentation. Note that some questions are regarding best practices and "desired" conditions and, therefore, do not require Non-Standard Documentation for a "NO" answer.

_____

_____

_____

_____

_____

_____

ROADSIDE BARRIERS AND END TREATMENTS DESIGN & CONSTRUCTION CHECKLISTS

THIS PORTION IS TO BE COMPLETED DURING CONSTRUCTION

Completed By: _____ **Date:** _____

Reviewed/Approved by ACE: _____**Date:** _____

Guide Rail [If guide rail is not involved, check NA____ here and move to next section]

NO.	QUESTION	Y	N	N/A
1	Will the final height of the bridge barrier be at least 29 inches after an overlay is placed on the bridge or if the bridge barriers are included in a rehabilitation project?			
2	Were modifications made to the project documents during construction that resulted in a non-standard installation?			---
3	Does the guide rail have the minimum unobstructed/deflection distance noted in RC-54M?			---
4	Is the construction of short radius curves per RC-54M?			
5	If guide rail posts are placed within 1 ft of the slope break point or at the slope break point (but not beyond it), were 7 ft or longer posts used?			
6	If guide rail posts are placed beyond the slope break point, and slopes are no steeper than 2:1, were 8 ft or longer posts used?			
7*	If grading or slopes were improved, was the Guide Rail Mentor notified to check if guide rail is still warranted?			
8	If there is a curb, is the curb flush with the face of guide rail as shown on RC-51M?			
9	If the curb exceeds a height of 4 inches, is the guide rail stiffened (nesting, close post spacing, etc.)?			
10	If posts are omitted due to an underground structure or utility, is the system in compliance with RC-51M?			

End Treatments & TSS [If none are involved, check NA____ here and move to next section]

NO.	QUESTION	Y	N	N/A
1	Unless approved with Non-Standard Condition Documentation, was everything else installed in accordance with the RC Standards?			---
2	Has the product been installed according to the manufacturer's instructions/checklist?			
3	Are turndowns, strong post anchor terminals, and/or TSSs installed in accordance with RC Standards?			
4	Are the approaches to end treatments (except Buried-in-Backslope) graded (per RC-54M) to ensure maximum vehicle stability prior to the impact?			
5	Are Buried-in-Backslope (BIB) end treatments installed as shown on RC-54M?			
6	Is it ensured that if used, only plastic delineator posts are installed in front of Type II and III end treatments (must be placed 3 ft or more in advance of impact head)?			

NO.	QUESTION	Y	N	N/A
7	Is reflective sheeting applied to the face of the impact head for delineation as an object marker?			---

Concrete Barrier [If concrete barrier is not involved, check NA____ here and move to next section]

NO.	QUESTION	Y	N	N/A
1	Is the new barrier height in compliance with RC Standards?			---
2	Does the installation of precast concrete barriers on tight curves meet Publication 408, Section 623.3, for longitudinal joints?			---
3	Does the newly installed concrete barrier meet RC Standards? (shape, taper rate, reinforcement, embedment, joints, etc.)			---

High-Tension Cable Median Barrier [If HTCMB is not involved, check NA____ here and move to next section]

NO.	QUESTION	Y	N	N/A
1	Is the HTCMB installed (slope, spacing, and height) as indicated on plans, special provisions, and manufacturer's recommendations?			---
2	Is HTCMB correctly tensioned according to manufacturer's recommendations?			---
3	Are the posts installed/socketed in concrete per specifications?			---
4	Is the HTCMB installed at least 8 ft away from the bottom of the ditch?			---

Transitions [If transitions are not involved, check NA____ here and move to next section]

NO.	QUESTION	Y	N	N/A
1	Are transitions between different barrier heights, different types of barriers (e.g., guide rail to concrete barrier), and different post spacings (e.g., weak post to strong post guide rail or 31-S to 31-SCC) installed per RC Standards?			---

Bridge Barrier [If new bridge barrier is not involved, check NA____ here and move to remarks section]

NO.	QUESTION	Y	N	N/A
1	Does the final height of the bridge barrier conform to the bridge plans?			---

General [Must be completed]

NO.	QUESTION	Y	N	N/A
1**	Was the guide rail mobile app used to update inventory data?			---

Recommended in Construction but not required

LENGTH OF NEED – FIELD CHECK

Procedure:

- Identify upstream face of hazard
- Beginning at the upstream face of hazard, walk upstream along the edge of traveled way a distance of 300' (200' for 45 mph and less)
- From this position, sight to the upstream, back edge of hazard (limit to 30' offset)
- End treatment of barrier should lie near (± 30') the line of sight

L_R is distance needed for a vehicle which leaves the roadway to come to a complete stop. If length of need comes out short, check with designer or guide rail mentor.

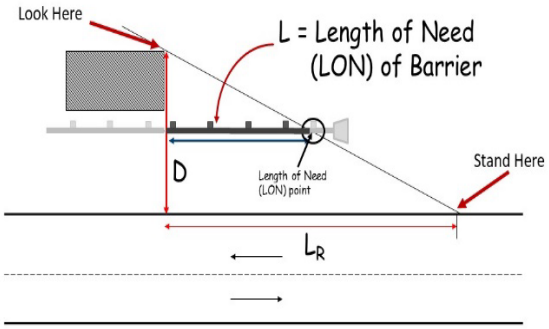

Remarks: For all questions where the answer was "NO" and not already documented in design, discuss and attach a sketch as applicable. Indicate questions #'s which are discussed.

BLANK PAGE

CHAPTER 13

EROSION AND SEDIMENT POLLUTION CONTROL AND POST CONSTRUCTION STORMWATER MANAGEMENT

13.0 INTRODUCTION

Pennsylvania's Clean Streams Law of 1937 (Act 394), as amended, prohibits the discharge to the waters of the Commonwealth of any pollutive materials whether from industrial or domestic sources. It also allows the Pennsylvania Department of Environmental Protection (PA DEP) to regulate any activity which creates a danger of pollution or has a potential for pollution. Pennsylvania's programs for the control of erosion and sediment pollution and for post-construction stormwater management have been adopted under the authority of 25 PA Code Chapter 102 (Erosion and Sediment Control). To explain the requirements of these programs pursuant to Chapter 102, PA DEP published in April 1990 an implementation manual titled, "Erosion and Sediment Pollution Control Program Manual" (updated in March 2000 and again in March 2012); and in December 2006 published, "Pennsylvania Stormwater Best Management Practices." Other related programs adopted by PA DEP are Chapter 105 (Dam Safety and Waterway Management) and Chapter 106 (Flood Plain Management) regulations. Pertinent regulations regarding the Storm Water Management Act of 1978 (Act 167) are addressed in Section 13.7.

Also, as stipulated in the Federal-Aid Policy Guide, 23 CFR 650, Subpart B, it is the policy of the Federal Highway Administration (FHWA) that Federal-aid highways and highways constructed under the direct supervision of FHWA shall be located, designed, constructed and operated according to standards that minimize erosion and sediment damage to the highway and adjacent properties and abate pollution of surface and ground water resources.

Water pollution degrades surface waters making them unsafe for drinking, fishing, swimming, and other activities. As authorized by the Federal Clean Water Act, the National Pollutant Discharge Elimination System (NPDES) permit program controls water pollution by regulating point sources that discharge pollutants into waters of the United States. Point sources are discrete conveyances such as pipes or human-made ditches. In most cases, the NPDES permit program is administered by authorized states. Since its introduction in 1972, the NPDES permit program is responsible for significant improvements to our Nation's water quality. Section 13.6.C discusses the NPDES permit program for Pennsylvania in greater detail.

Soil erosion is the process by which the land surface is worn away by the action of wind, water, ice and gravity. Under natural conditions, erosion occurs at a very slow and uniform rate and is a vital requirement in maintaining environmental balance. Sedimentation is the process involving the gravitational deposit of transported material in flowing or standing water. Erosion and sedimentation are normal geologic processes and are a matter of concern when accelerated by highway related activities. Such activities include the removal of the natural protective vegetative cover, the disturbance of the soil or other significant changes in topography.

The disturbance of land during construction is frequently accompanied by sudden, drastic increases in soil erosion. This accelerated erosion can be minimized by prudent scheduling of construction activities. Control measures can reduce sediment production. PA DEP's Chapter 102 regulations require that all persons proposing or conducting earth disturbance activities to develop, implement and maintain erosion and sediment pollution control measures to minimize the potential for accelerated erosion and sedimentation and to manage post-construction stormwater. Section 13.1 provides highlights of the Chapter 102 regulations.

13.1 CONSIDERATIONS RELEVANT TO CONSTRUCTION

Effective erosion control planning begins during the preliminary design phase of highway project development. Control of construction activities and knowledge of the soils encountered are basic to determine measures for preventing erosion and the movement of sediment. Control measures shall be designed to fit the environment, topography, soils, rainfall, land use and construction schedules. A highway location selected with consideration of the problems associated with these basic elements can greatly reduce erosion problems during and after construction.

Prevention of sediment pollution of waterways involves the following principles: (1) schedule construction activities to reduce soil area exposed; (2) control erosion at the source; (3) control water that flows across the right-of-way and (4) perform timely seeding and mulching operations to stabilize disturbed areas as soon as possible. The key to controlling sediment pollution is to control soil erosion at the source.

Special precautions should be taken in the use of construction equipment to prevent operations which promote erosion. Wheel tracks from heavy equipment are vulnerable to erosion from the concentration of water. Fording of streams with equipment shall be kept to a minimum and, where required, shall be performed in accordance with the requirements of Chapter 10, Drainage Design and Related Procedures, and regulatory permit requirements. Regulatory permit requirements take precedence over any design manuals.

Embankment slopes that encroach on or near stream channels should be adequately protected against erosion. Where possible, a protective buffer of vegetative cover should be preserved or established between the top of cuts or bottom of fills and the adjacent ditch or drainage way. The buffer area should be identified on the typical sections and plans and protected from construction activity.

Borrow pits and waste disposal areas should be selected with full consideration of erosion control requirements during borrow or disposal operations and during the final treatment or restoration of the area. Wherever located, special precautions shall be taken to control erosion and sediment problems and off-site effects. The disposal of waste in wetlands or in the flood channel area of any stream is prohibited. Regardless of the responsibility of the selection of borrow areas, plans of operation and of restoration, cleanup, shaping, seeding and mulching shall be approved by the Engineer.

Plans for the control of runoff must include measures to keep sediment from entering waterways before borrow or disposal operations begin. Diversion channels and sediment traps or sediment basins may be used for this purpose. Topsoil from the borrow pit area shall be salvaged for use in restoring the borrow area. Topsoil from a waste area should also be salvaged if it is needed for restoration. Stockpiled topsoil shall be protected from erosion. Final restoration of borrow and waste disposal areas shall include grading, establishment of vegetative cover and other treatments that blend the area into the surrounding landscape. The restored areas shall be well drained, unless approval is given to convert the pit area into wetlands or lakes for fish and wildlife, recreation, stock water or irrigation. Erosion and sediment pollution control shall be provided and maintained at wetland mitigation sites until they become established.

Where practical, erosion and sediment pollution control measures, also referred to as best management practices (BMPs), should be located within the normal right-of-way. However, when necessary, additional right-of-way acquisition may be required and shall be considered prior to completion of the right-of-way plans. If erosion and sediment pollution control measures will be removed during the construction contract, a temporary area for construction may be utilized. The control of the water across the right-of-way shall be completed prior to or concurrent with clearing and grubbing for the roadway. This may require offsetting the culverts from the natural drainage course to transport the water across the work area. All earth ditches or channels shall be stabilized before use to prevent erosion. Runoff from work areas shall be collected and controlled prior to entering a natural watercourse. All water originating outside of the project should be kept separate from that originating within the construction area.

Accelerated erosion can be minimized by the use of the following: (1) slopes which are rounded and blended into the natural terrain; (2) drainage channels properly designed with regard to location, width, depth, slope alignment and protective treatment; (3) proper facilities for ground water interception; (4) dikes; (5) berms and other protective devices; (6) protective ground covers and plantings and (7) properly designed sedimentation removal devices.

Erosion and sediment pollution control BMPs should be indicated on the construction drawings, as required, and so located that they do not interfere with the normal construction operations. The use of several smaller BMPs off the main stream has the advantage of not interfering with fish life and has less detrimental consequences in case of failure or overtopping of BMPs, since failure from overtopping is not likely to occur at all of the small BMPs simultaneously. BMPs located within a waterway may require a Chapter 105 permit from PA DEP.

Most erosion and sediment pollution control BMPs will be temporary, since most of the soil erosion occurs only during construction. Permanent detention basins provided for stormwater management purposes may be used as sediment basins during highway construction. Those basins located in a regulated watershed pursuant to the Storm

Water Management Act shall be designed and constructed in accordance with the standards of the individual watershed stormwater management plans. In some special cases, a multipurpose detention basin may be installed to provide water quality and wildlife habitat enhancements. Permanent erosion and sediment pollution control BMPs shall have a plan of maintenance. Temporary erosion and sediment pollution control BMPs shall be cleaned and maintained to assure proper functioning for the expected period of use. Some basins or ponds, because of size or location, may require protective fencing to limit unauthorized access.

Erosion and sediment pollution control BMPs shall be provided for all phases of construction activities including those items which are not normally specified in construction drawings. These BMPs also may be required for testing operations such as those for archeology and drilling.

13.2 SEEDING AND MULCHING STABILIZATION

Seeding with various grass or grass and leguminous plant mixtures is necessary to restore vegetative cover to soil surfaces exposed during excavation operations. Restoring the vegetative cover with deep-rooted, long lived and persistent adapted plant species is the most effective measure to prevent extensive soil erosion and any accompanying sedimentation loss and deposit in undesired areas. The use of permanent or temporary seeding or temporary mulching must be anticipated during earthwork operations.

A. Standard Highway Seeding Mixtures. Publication 408, *Specifications,* Section 804 lists several standard seeding mixture formulas which should be used on typical construction slopes for highway construction projects. A general description and guideline for their use is as follows:

1. Formula B. This is a refined lawn type, sod forming grass formula containing a large percentage of Kentucky bluegrasses with perennial ryegrass and red fescues. This mixture is generally used on non-steep surfaces where a more highly maintained and mowed surface, such as a lawn, is desired. Use only on areas which have topsoil.

2. Formula C. This is a mixture of predominantly crownvetch (leguminous plant) with a nurse crop of annual ryegrass. The ryegrass will hold the soil in place until the slower growing crownvetch establishes itself. This mixture is generally used on slopes steeper than 1V:3H where mowing is not anticipated or desired. Crownvetch is the state's official Soil Conservation Plant. Crownvetch will normally hinder the invasion of adjacent native vegetation for many years. Topsoil application is not necessary in areas to receive Formula C. Do not use within 20 ft of areas where evergreen trees, shrubs, seedlings or vines are to be planted.

Although this plant species is good for erosion control, Formula C has the capability of moving beyond the right-of-way. It can "creep" over and shade out other low growing vegetation. It can also cling to low hanging branches and onto right-of-way fence. The Pennsylvania Department of Conservation and Natural Resources (DCNR) considers Formula C to be a problematic, invasive plant in certain areas when it establishes outside of the right-of-way into residential and agricultural properties or other native plant communities.

3. Formula D. This is a rougher grass type, sod forming mixture containing a large percentage of tall and fine fescues. This mixture is generally used on most highway slope areas not receiving Formula C where mowing may or may not be designated. In non-mowed areas, this formula will eventually allow invasion and succession by adjacent native woody plants or wildflowers. Normally used in drainage channels or swales requiring permanent seeding.

4. Formula E. This is a 100% crop of annual ryegrass which is generally used to quickly stabilize exposed soil surfaces since it generally germinates within 2 weeks when climate conditions are favorable. Since the life cycle of this grass averages 1 to 2 years, this formula is considered most often for temporary use on unfinished graded areas during construction.

5. Formula L. This is a fine textured, sod forming mixture of hard fescue, red fescue with a nurse crop of annual ryegrass. This mixture can be used on low maintenance slope areas which will not be normally mowed and on flatter areas which will not receive more than 2 mowing cycles per year. Mixture should not be used where mowing height will be less than 6 in. Cutting less than 6 in is severely detrimental to establishment. Mixture has limited seedhead production and is not very adaptive to consistently wet soil conditions.

6. Formula W. This is a rough textured blend of tall fescue and birdsfoot trefoil (leguminous plant) with a nurse crop of redtop. This formula can be used on a wide assortment of conditions ranging from fairly dry to fairly wet soils where non-mow conditions are desired such as wetland replacement areas or wildlife habitat areas. This formula will eventually allow the desired invasion and succession of adjacent native plant material.

All areas of use for each seed formula will be shown on applicable typical sections and on the tabulation sheets.

Crownvetch crowns or potted plants can be used in lieu of Formula C seeding where a more positive and earlier establishment of crownvetch cover is essential or where successful seeding is questionable such as top of cut slopes or in areas of poor, erosive soil. Space plants 3 ft × 3 ft in a diamond pattern or under extreme conditions, 2 ft × 2 ft. Show areas of use and spacing on applicable Typical Sections and on the Tabulation Sheets. Potted plants of flatpea may also be used in this way to establish a quicker vegetative cover.

Other seeding formulas for various specialty areas such as wetland replacements, wildlife habitat areas, wildflower establishment or other soil conservation areas can be developed on a project by project basis.

Permanent soil protection and drainage facilities should be completed as early as practical, particularly diversion channels and similar controls that will divert runoff from work areas and unprotected soil. Areas of bare soil and the length of their exposure to erosion processes should be minimized by the following:

1. Temporary Seeding. When project areas are constructed in a rough graded condition and erosion may be accelerated, or establishment of a temporary vegetative cover on exposed soil areas is desired, specify Formula E, according to Section 804 and mulch according to Publication 408, *Specifications,* Section 805. Mulch alone (such as wood chips, straw, hay or other approved material) can be used to protect constructed slopes and other bare areas brought to finished grade when seeding operations are unfavorable. In all cases, temporary seeding and/or mulching will be installed on all disturbed areas where additional grading, topsoiling, etc. will not occur for 20 or more days.

2. Permanent Seeding. When project areas are constructed to finished grade and seeding operations are required within the dates specified in Publication 408, *Specifications,* Section 804.3(a), specify Formulas B, C, D, W, L or other approved seed formulas to minimize erosion by timely scheduling and limiting the work areas. Immediately begin permanent seeding and mulching operations as ground surfaces are brought to final grade.

Limit the use of sod to situations where new construction adjoins established lawns or other fine turf or where the immediate establishment of vegetative cover is required (i.e., between sidewalks and curb).

All seeding, soil supplements and mulching items shall be placed in accordance with the requirements of Publication 408, *Specifications,* Sections 804 and 805 or other approved special provisions.

B. Other Soil Conservation Seed Mixtures. Seeding mixtures of soil conservation type plantings for areas within the right-of-way limits other than typical highway construction slopes can include other seed types than the specified seed formulas listed in Publication 408, *Specifications*. These areas could include habitat replacement areas, wetlands, ponds, dam or stream banks, dikes, spillways, spoil areas, borrow pits or other special areas affected by the highway construction.

Some persistent type species for consideration are:

Legumes	Grasses	
Crownvetch	Tall Fescue	Redtop
Birdsfoot Trefoil	Deertongue	Switchgrass
Flatpea	Big Bluestem	Fine Fescues
Showy Tick Trefoil	Little Bluestem	Indiangrass

Other useful species include: Weeping Lovegrass and Perennial Ryegrass.

Recommended Seed Varieties

* Indiangrass - 'Rumsey', 'Holt' or 'Lometa'
* Tall Fescue - 'Kentucky 31' for low maintenance sites, turf-type varieties for high maintenance sites. If endophyte - free tall fescue is desired, use 'Johnstone ', 'Barcel ' or 'Festorina'.
* Perennial Ryegrass - Any fine-leaf turf-type variety
* Fine Fescue - Any named variety
  Redtop - Common seed, 'Streaker' or other named varieties
  Switchgrass - 'Blackwell' for droughty site, 'Shelter' for habitat, 'Cave-in-Rock ' for forage, 'Alamo'
  Deertongue - 'Tioga'
* Birdsfoot Trefoil - Any two of the following: 'Empire ', 'Norcen', 'Leo', 'Maitland' or 'Dawn'
  Flatpea - 'Lathco'
  Weeping Lovegrass - Common seed or 'Morpa'
* Crownvetch - 'Penngift'
  Big Bluestem - 'Niagara' or 'Kaw'
  Little Bluestem - 'Aldous', 'Camper' or 'Blaze'

* Use named varieties that originated in Pennsylvania or Northeastern United States whenever possible since they are generally more resistant to unfavorable soil conditions than are varieties of the same plant kind that originated in Midwest or western states.

C. General Design Guidelines.

1. Lespedeza species are often recommended in various literature as a good cover and food source for wildlife. However, Lespedeza species are not recommended for use in Pennsylvania due to survival limitations caused by varying climate conditions and its limited seed production.

2. Simple mixtures are easier to seed, establish and manage than complex mixtures containing 6 or more species.

3. Most species used for conservation plantings will only root where pH soil conditions are within a range of 5.5 to 7.0 and sufficient fertility is available to support plant growth.

4. For best results, seed in spring during March, April and May.

5. Grasses generally require 4-5 weeks of growth prior to hard frosts in order to survive winter conditions.

6. Legumes generally require 10-12 weeks to produce a seedling large enough to survive winter conditions. Seed legumes before July 15th in northern and western Pennsylvania and before August 15th in southeastern Pennsylvania. If seeding is necessary later than these dates, specify at least 30-35% or more of the legume seed to contain hard seed.

7. Inoculate legume seeds immediately prior to seed application with a selected culture of nitrogen fixing bacteria.

D. Species Guidelines (Also see Table 13.1):

1. Birdsfoot Trefoil (Lotus corniculatus):

a. Does not spread vegetatively from roots but spreads readily from seed. Perennial legume, deep rooted, long lived, prolific seed producer. Adaptable to wide range of soil types and moisture requirements. Will tolerate imperfectly drained soils.

b. Adapted over the entire state, except in the extreme southeast, where crown and root rot may injure stands.

c. Establishment can be suppressed by excessive competition from associated species.

d. Showy yellow flowers during summer.

e. Provides good food source and cover for many types of wildlife.

2. Perennial Ryegrass (Lolium perenne) and Annual Ryegrass (Lolium multiflorum):

a. Substitute approved perennial ryegrass varieties for annual ryegrass in most mixtures, since the vigorous annual ryegrass can prevent or retard the longer-lived but slower establishing grasses or legumes from becoming established.

b. Rye grasses germinate and establish relatively quickly if soil and climate conditions are optimum.

c. Use "turf" type varieties of perennial ryegrass.

3. Redtop (Agrostis alba):

a. Do not exceed recommended application rates. Seeds are very small and numerous. Excessive seeding rate can retard or suppress establishment of more persistent species in a mixture. Rapid germination under good conditions.

b. Creeping growth habit forming a coarse, loose turf, short lived.

c. Very adaptable to poor soil and wet or dry soils.

4. Weeping Lovegrass (Eragrostis curvula):

a. Short lived, perennial, "warm season" grass, often winter kills under Pennsylvania conditions. Drought resistant. Tolerant to low pH and aluminum soils such as reclaimed strip mined soils where high-sulfur material has been unearthed.

b. Useful in mixtures since it furnishes a quick cover until slower growing species such as deertongue can become established. Will not establish as quickly as ryegrass or some cereal grains.

c. Do not exceed recommended application rate since seeds are very small and numerous. Excessive seeding rate can suppress other specie development.

5. Switchgrass (Panicum virgatum):

a. Range type, bunch perennial "warm season" grass. Long-lived and deep rooted with good tolerance to relatively low soil pH and low fertility.

b. May often require 2-3 years or more to develop an acceptable dense vegetative cover.

c. Good for mine spoil areas and wildlife habitat replacement areas.

d. Compatible with Birdsfoot Trefoil.

6. Deertongue (Panicum clandestinum):

a. Do not plant in mixtures with Tall Fescue, Fine Fescues, Kentucky Bluegrass, Redtop, Reed Canarygrass, Annual or Perennial Ryegrasses, Crownvetch or Flatpea since it will not tolerate competition from these species.

b. May often require 2-3 years or more to develop an acceptable dense vegetative cover.

c. Seed 2-3 years old if of high vigor often germinates more readily than seed from previous years harvest.

d. Stratification of seed for 3-4 weeks at a temperature of 35-45 °F is often helpful in breaking seed dormancy.

e. Perennial "warm season" grass, useful in acid or infertile soils and droughty and moist soils.

f. Compatible with Birdsfoot Trefoil.

7. Crownvetch (Coronilla varia):

a. Perennial legume, somewhat slow to establish. Once established, it is a long lived, very vigorous grower and tends to dominate stands because of its ability to produce new plants from its roots.

b. Suppresses invasion of other plant species. Will "climb" onto fences and other low vegetation within reach.

c. Can also be planted using potted plants and crowns.

d. Herbaceous top growth dies back to ground each year.

e. Does best in a well-drained soil with pH of 6.0 or above, but has also been successfully established in soils with a pH as low as 5.4.

8. Flatpea (Lathyrus sylvestris):

a. Perennial, persistent, long lived, legume. Provides a dense mat of foliage.

b. Once established, it is very vigorous and spreads by underground rhizomes. Normal two year establishment.

c. Suppresses other invasive vegetation.

d. May also be planted using potted plants.

e. Food source and cover plant for many types of wildlife.

f. Herbaceous top growth dies back to ground each year.

g. Requires a well-drained soil with pH of 6.0 or above.

9. Tall Fescue (Festuca arundinacea):

a. Aggressive, deep rooted, tufted, long lived perennial.

b. Grows well on wet, poorly drained soil but also on drier soils and soils of low fertility. Withstands hot, dry weather.

c. Spreads by short underground stems.

10. Fine Fescues (Festuca spp):

a. Fine fescues include Creeping Red, Chewings, Hard and Sheep fescue.

b. Finest leaf of any lawngrass. Blends well with most other "cool-season" grasses.

c. Usually used in combination with another grass and a legume for soil conservation purposes.

d. Tolerates a wide range of light conditions from full sun to fairly dense shade.

e. Tolerates dry soils but does poorly on saturated soils. Performs well on roadsides with infrequent high mowing.

f. Not overly competitive in seedling stage. Fairly rapid germination and seedling establishment.

11. Big Bluestem (Andropogan gerardi)

a. Tall growing, perennial, deep rooted, vigorous bunch grass, sod forming. More drought tolerant than other "warm season" grasses. Grows 3 to 6 ft tall.

b. Grows well on most soil types but can be used on excessively drained soil with low water holding capacity. Good tolerance to low pH and low fertility. Can be used on coal waste areas or strip-mined soils.

c. Generally takes 2 years to reach its maximum growth potential because of slow germination and seedling growth.

d. Seed is chaffy and will not flow well unless debearded. Specify 'Debearded' seed only. (Note: There are several specially designed seedbox seeders that will accommodate 'fluffy' seed.)

e. Important forage grass in the Midwest prairie states.

f. Wildlife use by songbirds and white-tailed deer for food and for nesting and escape cover.

Refer to Table 13.2 for various seed mixtures recommended for permanent cover for soil conservation planting areas.

Other seed mixtures than those listed in Table 13.2 may also be developed for selected areas but shall be approved by the Bureau of Project Delivery, Highway Delivery Division, Highway Design and Technology Section.

Refer to Table 13.3 for various specialty soil conservation areas where the recommended seed mixtures listed in Table 13.2 can be used.

Refer to Table 13.4 to convert the seeding rates listed in Table 13.2 to lb/1000 SY which is the standard area measurement for Department seeding applications.

TABLE 13.1
SPECIES FOR EROSION CONTROL AND SOIL CONSERVATION PLANTINGS

SPECIES	GROWTH HABIT[1]	TOLERATES					PERSISTENCE[3]	MINIMUM SEED SPECIFICATIONS[5]				
		WET SOIL	DRY SITE	LOW FERTILITY	ACID SOIL (Ph 5-5.5)[2]	ALUMINUM[3]		PURITY (%)	READY GERM (%)	HARD SEED (%)	TOTAL GERM (%)	SEEDS/lb (1000's)
Warm-Season Grasses												
Deertongue grass	bunch	yes	yes	yes	yes	H	L	95	75	—	75	250
Weeping lovegrass	bunch	no	yes	yes	yes	M	S to M	97	75	—	75	1500
Switchgrass	bunch	yes	yes	yes	yes	M	L	95	75	—	75	390
Big Bluestem	bunch	yes	yes	yes	yes	M	L	60 PLS				150
Cool-Season Grasses												
Tall fescue	bunch	yes	no	yes	no	L	M to L	95	80	—	80	227
Redtop	sod	yes	yes	yes	yes	L	M	92	80	—	80	5000
Fine fescues	sod	no	no	yes	no	L	L	95	80	—	80	400
Perennial ryegrass	bunch	yes	no	no	no	L	S to M	95	85	—	85	227
Annual ryegrass	bunch	yes	no	yes	no	L	S	95	85	—	85	227
Legumes												
Crownvetch	sod	no	yes	yes	no	L	L	98	40	30	70	120
Birdsfoot trefoil	bunch	yes	no	yes	yes	L	L	98	60	20	80	400
Flatpea	sod	no	no	yes	yes	L	L	98	55	20	75	10

NOTES

[1] Growth habit refers to the ability of the species either to form a dense sod by vegetative means (stolons, rhizomes, or roots) or to remain in a bunch or single plant form. If seeded heavily enough, even bunch formers can produce a very dense stand. This is sometimes called a sod but not in the sense of a sod formed by vegetative means.

[2] Once established, plants may grow at somewhat lower pH, but cover generally is only adequate at pH 6.0 or above.

[3] Tolerance to aluminum is relative. Soil and spoils must be limed to a pH of 5.5 to 5.7 to eliminate possible aluminum and manganese toxicity. Tolerance ratings: H = high; M = medium; L = low.

[4] Persistence under favorable conditions: L = long duration; M = moderate duration; S = short duration (1 year or less).

[5] MINIMUM SEED SPECIFICATIONS ARE TRULY MINIMUM, AND SEEDLOTS TO BE USED FOR REVEGETATION PURPOSES SHOULD EQUAL OR EXCEED THESE STANDARDS. Thus, deertongue grass should germinate 75% or better. Crownvetch should have at least 40% readily germinable seed and 30% hard seed. Commonly, seedlots are available that equal or exceed the minimum specifications. Remember that disturbed sites are adverse for plant establishment. Ready germination refers to seed that germinates during the period of the germination test and that would be expected, if conditions are favorable, to germinate rapidly when planted. The opposite of ready germination is dormant seed, of which hard seed is one type.

TABLE 13.2
RECOMMENDED SEED MIXTURES FOR PERMANENT COVER FOR SOIL CONSERVATION PLANTINGS

MIXTURE NUMBER	SPECIES	SEEDING RATE (lb/acre) PLS**	
		MOST SITES	ADVERSE SITES ****
1***	tall fescue, or fine fescue plus redtop*, or perennial ryegrass	60 35 3 15	75 40 3 20
2	birdsfoot trefoil, plus tall fescue, plus redtop*	6 30 3	10 35 5
3	birdsfoot trefoil, plus crownvetch, plus tall fescue	6 10 20	10 20 30
4	flatpea, plus tall fescue, or perennial ryegrass	20 20 20	30 30 25
5	tall fescue, plus fine fescue	40 10	60 15
6	deertongue grass, plus weeping lovegrass*, plus birdsfoot trefoil	15 1 6	20 1 10
7	switchgrass, or Big Bluestem plus weeping lovegrass*, plus birdsfoot trefoil	15 1 6	20 1 10

**** Soil conditions that are very acidic, infertile, severely eroded or possibly toxic and where liming, fertilization or other seedbed preparations are difficult to accomplish.

*** This mixture suitable for frequent mowing. Do not cut shorter than 4 in.

** PLS means Pure Live Seed. PLS is the product of the percentage of pure seed times percentage germination divided by 100. For example, to secure the actual planting rate for switchgrass, divide 12 lb PLS by the PLS percentage shown on the seed tag. Thus, if the PLS content of a given seed lot is 35%, divide 12 PLS by 0.35 to obtain 34.3 lb of seed (35 percent PLS), the amount of seed required to plant 1 acre. All mixtures in Table 13.2 are shown in terms of PLS.

* Keep seeding rate of that recommended in table. These species have many seeds per pound and are very competitive. To seed small quantities of small seeds such as weeping lovegrass and redtop, dilute with dry sawdust, sand, rice hulls, buckwheat hulls, etc.

TABLE 13.3
SOIL CONSERVATION PLANTING AREAS

SEED MIXTURE APPLICATION, TYPE OF AREA	TABLE 13.2 SEED MIXTURE NUMBERS
Slopes and banks (non-mowed)	
(a) Well-drained	4 or 7
(b) Variable drainage	2 or 3
Slopes and banks (mowed)	
(a) Well-drained	1 or 5
Gullies and eroded areas	2, 3 or 7
Conservation structures	
(a) Sod waterways, spillways and other frequent water flow areas	1 or 2
(b) Drainage ditches	
(1) shallow, less than 3 ft	1 or 2
(2) deep, non-mowed	3
(c) Pond banks, dikes, levees, dams, diversion channels and occasional water flow areas	2 or 3
Sanitary landfill areas	2, 3, 6 or 7
Strip-mine spoils, mine wastes, fly ash, slag, settling-basin residues and other severely disturbed areas	2, 3, 4, 6 or 7

TABLE 13.4
SEEDING APPLICATION RATE CONVERSION CHART
1 acre = 43,560 SF = 4,840 SY

lb/acre	lb/1,000 SY	lb/acre	lb/1,000 SY
1	0.25 (4 oz)	15	3
2	0.5 (8 oz)	20	4
3	0.6 (10 oz)	25	5
4	0.8 (13 oz)	30	6.25
5	1	35	7.25
6	1.25	40	8.25
8	1.75	50	10.5
10	2	60	12.5
12	2.5		

Seeding design selections are also controlled by several physical and chemical factors which must be considered prior to selecting a seed mixture. Some design considerations are as follows:

1. Soil analysis including composition, acidity, fertility, moisture content or any toxic properties.

2. Site conditions such as full sun, partial or heavy shade as well as directional slope exposures.

3. Slope criteria including steepness, embankment (fill) or cut surfaces.

4. Desired long term or short term longevity of selected plants including plant specie competition from species in the mixture and from adjacent vegetation.

5. Anticipated maintenance requirements.

A logical guideline procedure for seeding design would include:

1. Carefully analyze any limiting site factors, both physical and chemical.

2. Select an appropriate combination of adaptable plant species.

3. Select an appropriate set of establishment procedures consistent with the needs of the plant species to be seeded and the need to overcome any limiting site factors.

4. Only use seed of proper plant species or varieties of high germination capacity and vigor.

The proper use of lime and fertilizers and the addition of various soil amendments can rectify many unfavorable soil conditions and result in establishing an adequate vegetative cover with desired species.

E. Specification Preparation and Approvals. Seeding specifications for soil conservation plantings shall be prepared to include the following format: (1) soil supplements, (2) specie selections, (3) purity and germination percentages, (4) application rates and (5) construction requirements.

Refer to Figure 13.1 for seeding special provision format.

All seeding specifications and proposed seeding locations for soil conservation plantings shall be approved by the Bureau of Design and Delivery, Highway Design and Technology Division.

F. Seed Quality. All seed sold in Pennsylvania must, by law, have a tag or label listing the tested percentages of pure seed, inert matter, crop seed and weed seed as well as germination percentage and test date. Seed with a test date older than nine months should not be used.

Certified seed is the best assurance of obtaining seed of high physical quality and known genetic identity especially for named varieties. For erosion control and conservation plantings, seed should be high in germination and purity rates.

PLS (Pure Live Seed) is a method of defining the planting quality of chaffy seeds such as various wildflowers and switchgrass. The PLS number is calculated by multiplying the % of pure seed by the % of germination and then dividing by 100. Example: 72% pure seed × 85% germination ÷ 100 = 61% PLS. This allows the amount of seed required to be adjusted to compensate for low purity and germination (see Table 13.2 note for an example of how the seed application rate is adjusted for the desired PLS number).

Generally "common seed" or seed of unknown genetic origin can be used for soil conservation plantings if certified seed is not available.

FIGURE 13.1
SPECIAL PROVISION FORMAT FOR SPECIAL SEEDING MIXTURES

SAMPLE SPECIAL PROVISION

Item 9804 - ×××× - Seeding and Soil Supplements - (Insert appropriate name)

DESCRIPTION - This work is furnishing and placing seed and soil supplements of the type specified.

MATERIALS -

(a)	Pulverized Agricultural Limestone	Section 804.2(a)1
(b)	Commercial Fertilizer	Section 804.2(a)2
(c)	Slow-Release Nitrogen Fertilizer	Section 804.2(a)3
(d)	Inoculant (When Applicable)	Section 804.2(c)
(e)	Seed Formula	

SEEDING RATE lb/1000 SY	MIN% PURITY/GERMINATION	MAX% WEED SEED

(Insert Desired Seed Formula)

Seed to meet applicable requirements of Section 804.2(b) for seed tests, PA Dept of Agriculture regulations, PA Seed Act of 1965, Act No. 187 and delivery of seed to work area.

CONSTRUCTION -

Loosen or roughen soil surface on all areas to receive seed to a depth of at least 2 in.

Apply soil supplements in accordance with Section 804.3(c). Prior to project completion apply slow-release nitrogen fertilizer to soil surface.

When applicable, inoculate leguminous seed in accordance with Section 804.3(d).

Apply seed in accordance with Section 804.3(e). Spread seed where indicated and at the specified rate within the following dates, or as directed.

(Insert Desired Seeding Dates)

Follow Sections 804.3(i) and (j) for liability and maintenance requirements.

Mulch seeded area with straw in accordance with Section 805.

MEASUREMENT AND PAYMENT -

(a) Seeding and Soil Supplements. Pound.
(b) Mulching. Section 805.4(a).

Some seeds, generally unscarified seeds of legumes such as crownvetch, birdsfoot trefoil and flatpea may have a watertight seedcoat. The seedcoat is eventually broken by either frost action or microbial action and germination will then produce a seedling. Seeds impervious to water are termed hard seed. The percentage of hard seeds in a given lot is added to the percentage of readily germinating seed to yield the total germination percentage. Legume seed lots should contain a certain minimum amount of hard seed as an insurance factor.

G. Seed Bed Preparation. Prior to seed application, soil supplements such as pulverized agricultural limestone and various fertilizer applications are required to prepare the area to be seeded.

Formula E does not normally require any applications of soil supplements. However, separate applications of lime, fertilizer or both may be necessary to establish the temporary grass cover in certain situations where anticipated soil conditions would not be conducive to good grass germination and growth.

Formulas B, C, D, L and W require soil supplement applications as specified in Publication 408, *Specifications,* Section 804.

Special soil conditions may require altering the standardized soil supplement application rates. All revisions shall be approved by the Bureau of Project Delivery.

Finished slopes should be seeded and mulched in increments of approximately 15 ft with permanent in-season seeding at the full application rates specified for soil supplements, seed and mulch. If out-of-season seeding is approved, apply either the full specified quantities for supplements, seed and mulch or apply full supplements and 50% of the seed application rate to be followed by the remaining 50% within the next seeding dates. Full mulch rate applications will be required for each seeding application to prevent soil erosion until seed germinates.

H. Mulching. All seeded areas should be mulched with an appropriate approved mulch to reduce the potential for erosion while the seeds germinate. Mulch also aids seed germination by conserving moisture in the soil, encouraging water infiltration and helping to regulate soil temperature from excessive exposure to the sun's heat.

Several mulch materials such as straw, hay, wood fiber, pellet mulch and bonded fiber matrixes are approved for use with seeding operations. Wood chips have also been successfully used in some conservation type seeding areas if application depths are strictly followed.

1. Straw. This material is one of the most preferred and one of the least expensive mulches for most seeding operations. Use on all topsoiled areas. Straw needs to be secured in place with either approved mulch control binders or mulch control netting to prevent loss of material by natural winds or breezes caused by vehicular movement.

2. Hay. This material is more adaptable to steeper slope conditions than straw but is more apt to introduce undesirable weed seeds. This application may have wide use for development of wildlife habitat areas where it helps to introduce more diverse plant types. Use on untopsoiled areas. Hay needs to be secured in place with either approved mulch control binders or mulch control netting to prevent loss of material by wind.

3. Wood Fiber. This material is applied with hydraulic mulching/seeding equipment and after drying, provides a thin protective cover. Wood fiber does not provide as much erosion protection or moisture retention for seed germination as straw or hay. The wood fiber must adhere to the soil surface and its protective longevity is less than other mulches. Use on areas where fire hazard potential for straw or hay is high or where a less conspicuous mulch appearance is desired. No weed seeds are introduced with this material.

4. Wood Chips. Placing wood chips in thin mulch layers not deeper than 2 in has been successfully used in conservation type seeding areas. Thicker mulch layers of 3 in, 4 in or deeper can be used without seed in temporary areas to provide erosion control until the permanent soil surface is prepared.

5. Pellet Mulch. This mulch is compressed pellets of shredded recycled paper which lose their pellet shape and adhere to other pellets, after water application, to form a thin protective cover. Pellet mulch is best used on flatter areas where a more refined turf grass, such as a lawn, is desired. Pellet mulch will not blow away.

Pellets are applied using rotary or drop-spreader equipment; therefore, slope steepness must be considered. No weed seeds are introduced with this material.

6. Bonded Fiber Matrix (BFM). This mulch is composed of fibrous material bonded together with adhesive agents to form a continuous, porous, erosion resistant protective cover which also adheres to the soil surface. BFM must be applied using hydro-mulching/seeding equipment and is applied at higher rates than standard wood fiber mulch. Generally use BFM on steep slopes where access and soil preparation is difficult. Use also on flatter areas where tacked straw or hay are prone to blow away or as an alternate to erosion control mats or blankets on slopes. Avoid using in direct water flow areas such as ditches, channels and swale centerlines, etc.

All areas of mulch use for seeding will be shown on the applicable typical sections and on the tabulation sheets.

Apply mulches at the rates specified in Publication 408, *Specifications,* Section 805.

13.3 OTHER STABILIZATION METHODS

A. Discussion. In most flat slope areas and areas where water generally does not have a concentrated flow, applying only mulch to the seeded area will be sufficient to provide the initial protection until the grass cover is established. On steeper slope areas, highly erodible soils, and drainage channels, other erosion control material will be necessary to provide the required protection to the seed and soil. Erosion control mats and blankets are commonly used for these applications. Turf reinforcement mats can artificially reinforce or augment the grass surface to permanently increase or enhance its resistance to erosion, and reduce the risk of grass failure due to localized poor cover establishment.

On the other hand, there are situations where grass establishment is not the most appropriate or, perhaps, cost-effective means of stabilization. Acceptable non-vegetated stabilization options are listed below.

Design guidance for all of the stabilization measures listed below can be found in Publication 584, *PennDOT Drainage Manual*, Chapter 8, Open Channels and Chapter 12, Erosion and Sediment Pollution Control.

B. Approved Measures.

1. Rolled Erosion Control Products (RECPs). Most provide temporary stabilization. Turf reinforcement mats are considered long-term, permanent stabilization measures.

- **a.** Mulch Control Netting.
- **b.** Open Weave Textile.
- **c.** Erosion Control Blanket.
- **d.** Turf Reinforcement Mat.

2. Spray on Mulches. Method of applying mulch (usually also seed and fertilizer) as a spray from a hydraulic tanker truck.

3. Geocell Slope Confinement. Cellular HDPE material that is typically used to stabilize steep side slopes.

4. Articulated Concrete Block Revetment System (ACBR). Interlocking or tied blocks of concrete used to permanently stabilize slopes.

5. Gabions. Wire baskets filled with stone or riprap that can be stacked and somewhat deformed, if necessary.

13.4 EROSION CONTROL MEASURES

A. Discussion. Erosion control measures, or Best Management Practices (BMPs) are used to prevent the erosion of earth by the forces in stormwater runoff. Erosion of unstabilized and unprotected earth can occur very easily. The previous section dealt primarily with protecting disturbed slopes while vegetation is being established or where vegetation alone is not sufficient. Most of the erosion control BMPs in this section are associated with the protection of slopes or channels receiving concentrated flow, such as from an upstream channel, pipe, or culvert.

B. Approved Measures. A number of erosion control BMPs that are appropriate for use on highway projects have been approved by the Department. The list below contains the names and brief descriptions of some of these approved BMPs. Additional information on these devices can be found in Publication 584, *PennDOT Drainage Manual*, Chapter 8, Open Channels and Chapter 12, Erosion and Sediment Pollution Control. Plan drawing details for most of the BMPs are located in the Publication 72M, *Roadway Construction Standards*; these should be included in the Erosion and Sediment Pollution Control (ESPC) Plan.

1. Channel Lining. Flexible (grass, RECPs, rock, etc.) or rigid (concrete) materials used to protect the underlying soil from erosion. Publication 584, *PennDOT Drainage Manual*, Chapter 8, Open Channels contains relevant design procedures and information.

2. Paved Energy Dissipator. Section of concrete channel lining containing partially embedded stones designed to dissipate energy in channels with velocities greater than 14 ft/s.

3. Rock Apron. Used to prevent scour and dissipate energy at pipe or channel outfalls where anticipated discharge velocities do not exceed 14.5 ft/s and where the apron can be installed on a level grade.

4. Rock Basin or Rock Energy Dissipator. Pre-formed scour holes that are used to dissipate energy and control erosion at pipe outlets where outlet velocities exceed the allowable limits of the soil or channel lining, but are 19 ft/s or less.

5. Stilling Well. Concrete energy dissipator constructed below grade at the outlet end of pipes and culverts.

6. Temporary Slope Pipe Drain. Installed to transport stormwater runoff safely down the face of a cut or fill slope to a stabilized area. Should be used prior to the installation of permanent facilities and/or growth of adequate ground cover on the slopes.

7. Diversion Ditch. Any type of channel that is constructed above a disturbed area to intercept and convey offsite runoff or runoff from undisturbed areas away from unstabilized areas.

C. Design Flows. In general, the temporary erosion control BMPs listed above must be designed to resist erosion for the 2-year storm event. Exceptions to this must be made for disturbances within Special Protection Watersheds (SPW) and for measures that will become permanent stormwater management or drainage facilities. Channels within a SPW must be provided with temporary lining able to resist erosion for the 5-year storm event. Permanent channel lining in any watershed must be resistant to erosion for the 10-year storm event, at a minimum. Temporary pipes, and outlet protection for temporary pipes, must be designed for the 2-year storm event (5-year storm event for SPW). Permanent outlet protection shall be designed for the maximum anticipated velocity from the discharging pipe.

13.5 SEDIMENT POLLUTION CONTROL DEVICES

A. Discussion. Sediment pollution control devices, which are also referred to as BMPs, are installed in and around construction sites to prevent sediments from being transported away from the site. Sediments can be carried off site by stormwater runoff and wind, or they can be attached to construction vehicles and deposited on roads adjacent to or near the site. Some sediment control BMPs temporarily hold runoff to allow sediments to settle out by gravity. Other BMPs filter runoff by straining sediment-laden water through a fine medium, such as filter fabric or gravel. The type of BMP used depends on the specific area of application.

B. Approved Devices. A number of sediment pollution control BMPs that are appropriate for use on highway projects have been approved by the Department. The list below contains the names and brief descriptions of the approved BMPs. Additional design and plan information on the devices listed in this section can be found in Publication 584, *PennDOT Drainage Manual*, Chapter 12, Erosion and Sediment Pollution Control. Plan drawing details for most of the BMPs are located in the Publication 72M, *Roadway Construction Standards*; these should be included in the ESPC Plan.

1. Rock Construction Entrance. Used to remove mud from the tires of construction vehicles leaving the site. Required whenever vehicular access onto unpaved areas is necessary.

2. Rock Filter Outlet. Used to replace damaged sections of silt barrier fence or to fill in space between the end of a section of silt barrier fence and a slope.

3. Compost Filter Sock. A perimeter control device that filters runoff in the form of sheet flow. Use at the bottom of disturbed slopes that would normally drain across the right-of-way line or into a channel. Consists of compost material wrapped in a geotextile container.

4. Compost Filter Berm. Same as compost filter sock, except that the compost is mounded instead of being wrapped in a geotextile container.

5. Silt Barrier Fence. Same application as a compost filter sock. Geotextile fabric is fastened to stakes that are driven vertically into the ground.

6. Heavy Duty Silt Barrier Fence. Should be used when slope lengths exceed the capacity of standard silt barrier fence. Fabric is reinforced with wire mesh backing and metal posts are used instead of wood stakes.

7. Vegetated Filter Strip. Well-established perennial grassy area located below a disturbed area used to remove sediment from runoff prior to it reaching receiving waters.

8. Pumped Water Filter Bag. Used to filter out sediments from water pumped from excavation holes associated with bridge piers and abutments. Also used to dewater trenches and filter water pumped from sediment traps and basins.

9. Storm Inlet Protection. Used to filter or settle out sediment in runoff from disturbed areas before it enters the storm sewer. Includes inlet filters, traps, and berms.

10. Rock Barrier. Temporary stone dam installed across a channel to remove sediment originating from flow in the channel before vegetation is fully established.

11. Sediment Trap. Temporary storage area used to detain sediment-laden runoff from small, disturbed areas. Types include embankment, Type M inlet, and riser sediment traps.

12. Sediment Basin. Large ponding area used to detain sediment-laden runoff from large, disturbed areas.

13.6 PREPARATION AND PROCESSING OF EROSION AND SEDIMENT POLLUTION CONTROL PLANS

A. Plan Preparation. In order to minimize accelerated erosion and to control sediment pollution during highway construction, proper preparation and adherence to implementation of the scheduled sequence of operation of ESPC Plans is of primary importance.

Erosion and sediment pollution control should be initially considered in the preliminary design stage and plans fully developed during the final design stage of a highway project.

The purpose of the ESPC Plan is to identify potential erosion problems and to define effective and economical measures to be used in conjunction with construction activities to minimize erosion and sediment pollution. The ESPC Plans for a project shall be prepared and processed in accordance with Publication 14M, Design Manual, Part

3, *Plans Presentation,* Chapter 6. All erosion and sediment pollution control BMPs shall be indicated by the applicable symbols presented in Publication 14M, Design Manual, Part 3, *Plans Presentation,* Chapter 13.

An ESPC Plan, as applied to Department projects, shall consist of three parts: (1) maps and drawings showing the topography of the area, the proposed alteration to the area and the erosion and sediment pollution control BMPs; (2) a narrative report describing the project and indicating the purpose and the engineering assumptions and calculations for control BMPs; and (3) detailed instruction in the contract proposal and/or the plan, as extracted from the narrative report data, to define staging, sequencing and scheduling of earthmoving activities and the installation of the erosion and sediment pollution control BMPs. The staging should be determined on the basis of such factors as: (1) drainage divide, (2) grade line direction, (3) efficient and economical construction operation, (4) earthwork balancing, (5) protection of traffic, and (6) maintenance consideration.

The following references located in Publication 584, *PennDOT Drainage Manual*, is useful information for developing PennDOT ESPC Plans:

- Chapter 8 – Design procedure and guidance for channel lining
- Chapter 12 – Design guidance for approved BMPs
- Chapter 12, Appendix B – Recommended notes for ESPC Plans
- Chapter 12, Appendix C – Recommended standards for ESPC Plans

B. Implementation and Maintenance. Implementation of the ESPC Plan on the project site and maintenance of BMPs thereafter are the responsibilities of the party performing the work, which is either the Department or the contractor. Every ESPC Plan shall contain a sequence of earthwork activities that includes installation and removal of all proposed temporary and permanent BMPs. The contractor will be responsible for implementing the plan per this sequence. Contractors shall also be notified of their responsibilities, which include but are not limited to the following:

- Ensure that the ESPC Plan is properly and completely implemented in accordance with the drawings and the technical specifications.

- Perform maintenance inspections on all BMPs after each rainfall event and, at a minimum, on a weekly basis, and document the inspections using inspection log sheets. All preventative and remedial work must be performed immediately.

- Obtain approval from the appropriate county conservation district or PA DEP regional office if deviation from the ESPC Plan is necessary or desired.

- Maintenance of all permanent BMPs becomes the responsibility of the owner in perpetuity upon completion of construction and acceptance by owner, subject to the terms of the warranty period specified in the contract documents.

- Fines and related costs resulting from the contractor's failure to provide adequate protection against soil erosion and for any violations of the Clean Streams Law and the rules and regulations promulgated thereunder shall be borne by the contractor.

These responsibilities and others specific to the project shall be described in the ESPC Plan. Maintenance instructions for each BMP to be used on a project must be provided on the plan.

C. Other Necessary Actions for Project Compliance. To assure compliance with regulatory requirements and to provide additional emphasis on erosion and sediment pollution control, necessary actions should be taken to comply with the following:

1. The ESPC Plans should be judiciously developed and implemented in accordance with the procedures and criteria specified in Publication 584, *PennDOT Drainage Manual*, Design Manuals, and Publication 72M, *Roadway Construction Standards*. If the proposed measures and facilities deviate from the specified procedures or criteria, it should be demonstrated that the alteration shall also result in prevention of accelerated erosion and sedimentation.

In general, only one ESPC Plan needs to be developed throughout the life of a project. This plan would normally cover all staged earthmoving activities. However, on major highway projects, it may be necessary to develop two or more control plans to address earthmoving activities which will occur before or after the prime construction project, or to be performed by a separate contractor or consultant.

2. A National Pollutant Discharge Elimination System (NPDES) permit is required for those highway projects in which the total project earth disturbance area is equal to or greater than 1 acre. In Pennsylvania, the NPDES permit program is delegated to and administered by PA DEP. PA DEP has delegated the management of the NPDES program to most of the County Conservation Districts. PA DEP and County Conservation Districts jointly regulate construction activities utilizing existing state regulations concerning erosion control and NPDES permits to implement the Federal requirements.

The 1972 amendments to the Federal Water Pollution Control Act (Clean Water Act or CWA) prohibit the discharge of any pollutant to Navigable Waters of the United States from a point source unless the discharge is authorized by a NPDES permit. The U.S. Environmental Protection Agency (EPA) has promulgated rules for the NPDES permit process:

- Phase I: Established in 1990, Phase I addresses discharges from large construction activities disturbing 5 acres or more of land.

- Phase II: Established on December 8, 1999, Phase II covers small construction activities that result in a land disturbance of equal to or greater than 1 acre and less than 5 acres. Site activities disturbing less than 1 acre are also to be regulated as a small construction activity if they are part of a larger common plan of development or sale with a planned disturbance of equal to or greater than 1 acre and less than 5 acres.

PA DEP issues two types of NPDES permits for Stormwater Discharges Associated with Construction Activities – a General Permit (PAG-2) and an Individual Permit. PAG-2 covers most projects; however, an Individual Permit is needed for projects in "special protection" watersheds (high quality, exceptional value, and exceptional value wetlands). Copies of the NPDES permit application forms, instructions, and other related documents are available through PA DEP's website (www.dep.pa.gov).

Each local municipality and county involved shall be notified, pursuant to Act 14, P.L. 834, to the effect that an application for the NPDES has been filed with PA DEP and the documentation of this notification included in the application submitted. No permit application fee is required for any application submitted by the Department. The NPDES shall be processed by the Engineering District through the County Conservation District, or PADEP, according to the established procedure. If construction of the project can not be completed within the time limit normally specified in a permit, a longer time limit to cover the entire construction period should be requested when the permit application is submitted.

3. An NPDES permit is not required for those highway projects which involve a total project earth disturbance area of less than 1.0 acre. However, the erosion and sediment pollution control measures and plans must comply with PA DEP's Chapter 102 regulations.

4. Best Management Practices (BMPs) must be utilized for all earth disturbances, regardless of area. Standards for the BMPs are contained in Publication 584, *PennDOT Drainage Manual*, Chapter 12.

5. A written ESPC Plan must be prepared for projects that disturb 5000 ft^2 or more. (Note: Two additional conditions which may require a written plan are listed in PA Code Section 102.4(b)(2).)

6. An Erosion and Sediment Control Permit is required for roadway maintenance projects that disturb 25 acres or more.

7. Special protection BMPs are required when earth disturbance activities may result in a discharge into a water classified under Chapter 93 of the PA Code as High Quality (HQ) or Exceptional Value (EV), including EV wetlands.

8. The current standard special provisions for the ESPC, as indicated in the Department's Contract Management System, should be included in all applicable contract proposals.

9. The necessary ESPC practices must be fully implemented and monitored during the construction of the highway project.

10. One copy of the ESPC Plan should be sent by the Engineering District to the Central Office, Bureau of Design and Delivery, Highway Design and Technology Division for information and review at the time the plan is submitted to the County Conservation District.

11. The County Conservation Districts have been delegated responsibilities for PA DEP's Erosion and Sediment Control Program. Under this program, authority is delegated to Conservation Districts at three different levels: Level I, Level II, and Level III. Level I delegation (four counties) includes providing information on PA DEP's Erosion and Sediment Control Program, the review and processing of Erosion and Sediment Control Permit applications, and the review of Erosion and Sediment Control Plans. Level II delegation (51 counties) includes Level I responsibilities, plus responsibilities of complaint investigation and site inspections. Level III delegation (10 counties) includes Level I and II responsibilities, plus enforcement responsibilities such as administrative hearings, equity actions, summary or misdemeanor actions, and assessment of civil penalties.

In addition to the Erosion and Sediment Control Program, 60 Level II and III Conservation Districts are also delegated responsibilities for processing National Pollutant Discharge Elimination System (NPDES) Permits for Stormwater Discharges Associated with Construction Activities. (Note: Philadelphia County does not have a County Conservation District.)

12. During construction, it is encouraged that PA DEP's Area Office staff be contacted to assist in implementing the erosion and sedimentation control measures and facilities. All significant changes, additions and/or deletions to the plans approved with a permit which will affect erosion and sediment pollution controls shall be approved by PA DEP prior to construction.

13. Generally, individual PennDOT construction projects will be issued one NPDES permit for the entire project, and this permit will apply inclusively to borrow and spoil areas.

14. NPDES permits are issued during the final design phase.

15. After spoil and borrow areas are identified, and before any earth moving activities occur in them, ESPC Plans must be submitted and approved. Once approved, these ESPC Plans automatically become amendments to the project's original NPDES permit.

16. Since there is only one NPDES permit issued to PennDOT for the entire project, if this permit is violated and subsequently suspended or revoked, that action will affect the entire project.

13.7 ANTIDEGRADATION AND POST CONSTRUCTION STORMWATER MANAGEMENT POLICY

A. Introduction. The Department performs a broad spectrum of activities to maintain and improve the state's highway system. Construction activities involving earth disturbance often result in the need to manage stormwater runoff. A comprehensive approach is necessary to address the challenges associated with managing stormwater runoff from linear highway systems. The Department employs an "E^5" strategy for addressing stormwater management issues. The goal is to integrate each of the E^5 components into the overall design process to achieve a more sustainable and efficient program:

- **E**xamine site characteristics and stormwater management needs early in the design process.
- **E**ngage PA DEP through pre-application meetings.
- **E**ncourage low impact practices for preventing runoff.
- **E**valuate new technologies and assess the performance of existing ones in the field.
- **E**ducate Department staff, consultants, and contractors on stormwater policy and implementation.

B. Definitions.

1. 3R Projects. The term 3R stands for resurfacing, restoration, and rehabilitation. 3R projects typically involve pavement improvement work (short of full-depth replacement) and targeted safety improvements. 3R projects generally involve retention of the existing three-dimensional alignment.

2. Antidegradation Best Available Combination of Technologies (ABACTs). Defined in 25 PA Code Chapter 102. Environmentally sound and cost effective treatment, land disposal, pollution prevention and stormwater reuse BMPs that individually or collectively manage the difference in the net change in stormwater volume, rate, and quality for storm events up to and including the 2-year/24-hour storm when compared to the stormwater rate, volume and quality prior to the earth disturbance activities to maintain and protect the existing quality of receiving surface waters of this Commonwealth.

3. Best Management Practices (BMPs). Defined in 25 PA Code Chapter 102. Activities, facilities, measures, planning or procedures used to minimize accelerated erosion and sedimentation and manage stormwater to protect, maintain, reclaim, and restore the quality of waters and the existing and designated uses of waters within this Commonwealth before, during, and after earth disturbance activities.

4. Combined Sewer Systems (CSSs). Defined by 25 PA Code Chapter 92a. A sewer system that has been designed to serve as both a sanitary sewer and a storm sewer.

5. Degradation. For HQ and EV watersheds, degradation is an adverse effect that results in a negative change in the existing water quality of the receiving surface water. For non-HQ and non-EV watersheds, it is a negative change in the existing or designated in-stream water use or the level of water quality necessary to protect the use.

6. Disturbed Area. Defined in 25 PA Code Chapter 102. Unstabilized land area where an earth disturbance activity is occurring or has occurred.

7. Ephemeral Stream. Defined in 25 PA Code Chapter 89. A water conveyance which lacks substrates associated with flowing waters and flows only in direct response to precipitation in the immediate watershed or in response to melting snowpack and which is always above the local water table.

8. Evapotranspiration (ET). The sum of evaporation and plant transpiration of water. Evapotranspiration accounts for a significant portion of the rainfall that is lost (not returned to streams via surface runoff) in Pennsylvania watersheds. The amount of evapotranspiration is influenced mostly by the types of vegetation and land use in a watershed. Because water transpired through leaves comes from the roots, plants with deep reaching roots can more constantly transpire water. Thus, herbaceous plants transpire less than woody plants because herbaceous plants usually lack a deep taproot. Also, woody plants keep their structure over long winters while herbaceous plants must grow up from seed in the spring in seasonal climates and will contribute almost nothing to evapotranspiration in the spring.

9. Impaired Stream. A surface water that does not meet the water quality criteria for its designated or existing use under 25 PA Code Chapter 93. Streams are examined for four main uses: water supply, aquatic life, recreation, and fish consumption. PA DEP monitors surface waters for biology, chemistry, and physical habitat using methods outlined in the approved 2015 Assessment Methodology. Impaired waters are listed in Categories 4 and 5 of Pennsylvania's Integrated Water Quality Monitoring and Assessment Report.

10. Impervious Area. A surface that is compacted or covered with a layer of material so that it is resistant to infiltration by water, including but not limited to structures and buildings; non-porous asphalt and concrete; gravel roads, driveways and parking areas; land areas covered with significantly compacted and unvegetated soil such as dirt roads, driveways and parking/storage areas; and other surfaces routinely used for vehicle parking and movement.

11. Infiltration. The process by which surface water penetrates through the ground surface into the soil. The soil texture and structure, vegetation types and cover, water content of the soil, soil temperature, and rainfall intensity all play a role in controlling infiltration rate and capacity. For example, coarse-grained sandy soils have large spaces between each grain and allow water to infiltrate quickly. Vegetation creates more porous

soils by both protecting the soil from pounding rainfall (which can close natural gaps between soil particles) and loosening soil through root action.

12. Long Term Control Plan. A plan developed by municipalities and/or municipal authorities designed to mitigate the impact of combined sewer system discharges and meet water quality standards.

13. Municipal Separate Storm Sewer System (MS4). Defined by 25 PA Code Chapter 92a (and paraphrased here). A separate storm sewer (including roads with drainage systems, municipal streets, catch basins, curbs, gutters, ditches, human-made channels or storm drains) which is owned or operated by a public body (created by or under State law) having jurisdiction over disposal of sewage, industrial wastes, stormwater or other wastes; that discharges to surface waters of this Commonwealth; is designed or used for collecting or conveying stormwater; is not a combined sewer; and is not part of a publicly owned treatment works.

14. Net Change. Refers to the change from pre-development to post-development conditions.

15. New Construction. Roadways that are built on a new alignment.

16. Non-discharge Alternative. Defined in 25 PA Code Chapter 102. Environmentally sound and cost-effective BMPs that individually or collectively eliminate the net change in stormwater volume, rate and quality for storm events up to and including the 2-year/24-hour storm when compared to the stormwater rate, volume and quality prior to the earth disturbance activities to maintain and protect the existing quality of the receiving surface waters of this Commonwealth.

17. Off-site Discharge. An off-site discharge is a stormwater discharge to a non-surface water such as a swale, ephemeral channel, or ground surface via level spreader, that will flow through a property or properties not owned by the Department prior to reaching a surface water. This definition applies to both construction and post-construction discharges.

18. Pre-development. Refers to runoff condition that exists onsite immediately before the planned project occurs. Pre-development is not intended to be interpreted as the period before any human-induced land disturbance activity has occurred.

19. Post Construction Stormwater Management (PCSM). Defined in 25 PA Code Chapter 102. Management of stormwater associated with a project site after the earth disturbance activity has been completed and the project site is permanently stabilized. The term "post-construction" is used to differentiate PCSM from discharges during construction. Erosion and sediment pollution control (ESPC) plans are required for most construction projects to show that runoff from disturbed areas during construction is properly managed. PCSM deals with runoff from the project <u>after</u> the earth disturbance is completed and the site has been stabilized.

20. Post-development. Refers to runoff condition that exists onsite after the earth disturbance activity has been completed and the project site is permanently stabilized.

21. Reconstruction. Roadways that are rebuilt primarily along the existing alignment. Reconstruction normally involves full-depth pavement replacement. Other work that would fall into the category of reconstruction would be adding lanes adjacent to an existing alignment, changing the fundamental character of the roadway (e.g., converting a two-lane highway to a multi-lane divided arterial) or reconfiguring intersections and interchanges.

22. Riparian Buffer. A vegetated area that plays a key role in maintaining water quality and providing nutrients in associated streams, rivers and lakes, thus providing economic and environmental benefits. It is simply defined as "A BMP that is an area of permanent vegetation along surface waters," in 25 PA Code Chapter 102.

23. Riparian Forest Buffer. Defined in 25 PA Code Chapter 102. A type of riparian buffer that consists of permanent vegetation that is predominantly native trees, shrubs and forbs along surface waters that is maintained in a natural state or sustainably managed to protect and enhance water quality, stabilize stream channels and banks, and separate land use activities from surface waters.

24. Road Maintenance Activity (RMA). Earth disturbance activities within the existing road cross-section, as defined in 25 PA Code Chapter 102. Guidance on the types of work that meet the definition can be found in Publication 584, *PennDOT Drainage Manual*, Chapter 12, Appendix E.

25. Special Protection Waters. Antidegradation requirements in Pennsylvania provide protection to waterbodies in discrete levels or tiers based on their existing uses, level of water quality, and environmental characteristics. The standard level of protection given to all waterbodies is to protect and maintain their designated and existing uses. A special level of protection is afforded to waterbodies with High Quality and Exceptional Value existing or designated uses, which is to protect existing water quality. These waterbodies are often referred to as Special Protection Waters.

26. Stormwater Control Measure (SCM). A technique, measure, or structural control that is used for a given set of conditions to manage stormwater runoff quantity, minimize erosive conditions, and improve effluent quality in a cost-effective manner.

27. Surface Waters. Defined in 25 PA Code Chapter 102. Perennial and intermittent streams, rivers, lakes, reservoirs, ponds, wetlands, springs, natural seeps, and estuaries, excluding water at facilities approved for wastewater treatment such as wastewater treatment impoundments, cooling water ponds, and constructed wetlands used as part of a wastewater treatment process.

28. Thermal Impact. Defined in 25 PA Code Chapter 96. The threshold for a thermal impact to the water quality of a receiving surface water is more than two degrees Fahrenheit change during a one-hour period in mean water temperature. The water quality criteria do not preclude the allowance of a reasonable mixing zone if there is no significant effect on the ambient temperature of the stream outside the mixing zone.

29. Total Maximum Daily Load (TMDL). Defined by 25 PA Code Chapter 96. The sum of individual waste load allocations for point sources, load allocations for nonpoint sources and natural quality and a margin of safety expressed in terms of mass per time, toxicity or other appropriate measures. It is the amount of pollutant loading that a waterbody can assimilate and meet water quality standards. The TMDL process is a planning tool to develop pollution reduction goals that will improve impaired waters to meet water quality standards.

C. Design Standards and Calculations. A quantitative PCSM analysis is required whenever a project must obtain a permit under 25 PA Code Chapter 102 (herein referred to as Chapter 102) or it is within a watershed with an approved and current Act 167 Stormwater Management Plan (SMP). Three key measures are used to assess the potential for impacts from stormwater runoff – rate, volume, and quality. The goal of PCSM is to prevent or minimize any increase in the quantity (rate and volume) of runoff while also minimizing the factors affecting the quality. Commonly cited concerns related to potential effects of roadway runoff on water resources are:

- Stream channel erosion and flooding resulting from increases in runoff rate and volume.
- Water quality impacts to streams from particulates, floatables, hydrocarbons, and deicing materials.
- Thermal impact on streams from heat transfer, base flow reduction, and loss of riparian buffer vegetation.

The PCSM design standards for Department projects address these concerns and are consistent with Chapter 102, which states that PCSM for any project must maintain and protect existing water quality and existing and designated uses by maintaining the site hydrology and water quality, and erosive impacts of the conditions prior to initiation of any earth disturbance activities. Section 102.8.b of Chapter 102 states PCSM "shall be planned and conducted to the extent practicable" in accordance with these eight items:

- Preserve the integrity of stream channels and maintain and protect the physical, biological and chemical qualities of the receiving stream.
- Prevent an increase in the rate of stormwater runoff.
- Minimize any increase in stormwater runoff volume.
- Minimize impervious areas.
- Maximize the protection of existing drainage features and existing vegetation.

- Minimize land clearing and grading.
- Minimize soil compaction.
- Utilize other structural or nonstructural BMPs that prevent or minimize changes in stormwater runoff.

Each of these items should be considered throughout the planning and design stages. Guidelines on PCSM calculations and assumptions are as follows.

1. Runoff Volume. The net difference in runoff volume from pre- to post-construction conditions for the 2-year, 24-hour storm event should be managed for each point of interest, as defined in Section 13.7.C.6. All non-structural SCMs should first be evaluated and applied to the extent practicable. Other SCMs utilizing infiltration, evapotranspiration, or managed (slow) release must then be evaluated for potential volume reduction "credits." Important cover condition assumptions are explained in Section 13.7.C.4.

2. Peak Rate of Runoff. In the absence of an approved and current watershed-based Act 167 SMP, post-construction peak rates should be controlled to pre-construction peak rates for the 2-, 10-, 50- and 100-year, 24-hour storm events. The cumulative effect of the project on peak flows on the surface water hydrology will be the basis for determining the extent to which SCMs are needed to control rates. Peak rates should be evaluated at each point of interest. As noted in Section 13.7.D, the release rate standards from an approved and current Act 167 SMP are applicable to any portion of a project located within that watershed.

3. Water Quality. The quantitative water quality goal for each surface water is to achieve no net change (i.e., increase) in pollutant loads for storms up to and including the 2-year/24-hour storm. DEP requires analysis of three pollutant constituents: Total Suspended Solids (TSS), Total Phosphorus (TP) and Total Nitrogen (TN). The Pennsylvania Stormwater Best Management Practices Manual recognizes these three constituents as surrogates for other pollutants that occur in lesser concentration but can also impact water quality. Pollutant loads are calculated for pre- and post-construction conditions and SCMs are used to eliminate increases. DEP published new guidelines for water quality calculations in December 2019 with the reissuance of PAG-02. The guidelines include land cover pollutant concentrations and median outflow pollutant concentrations for various SCM types. Calculations must be demonstrated in the Quality Worksheet of PA DEP's PCSM Spreadsheet, which can be downloaded using the following link:
http://files.dep.state.pa.us/Water/BPNPSM/StormwaterManagement/ConstructionStormwater/DEP_PCSM_Spreadsheet.xlsb

Chapter 102 regulations also require an analysis of potential thermal impacts. While no quantitative analysis is required, a description of how thermal impacts were avoided, minimized, or mitigated must be provided. Strategies to reduce the potential for thermal impacts include:

- Limit the use of curb and gutter sections to the extent practicable.
- Utilize vegetated channels in lieu of storm sewer to the extent practicable.
- Consider vegetated islands in lieu of concrete islands.
- Maintain naturally occurring vegetation (i.e., buffer zones, including wetland and riparian) along streams, rivers and other surface waters for shading and thermal protection.

Although the use of vegetated swales for stormwater conveyance is preferred, storm sewers are buried and generally stay cool; thus, a significant amount of heat loss can take place in a long sewer run before the runoff reaches the surface water.

4. Existing Cover Conditions. The soil-cover complex is an important variable in calculating runoff quantities from a drainage area. Coarser textured soils will generally produce less runoff than finer textured soils. Undeveloped and densely vegetated land cover will produce lower runoff quantities compared to developed and sparsely vegetated land cover.

In Section 102.8(g)(2) of Chapter 102, criteria are given related to land cover assumptions for calculating pre-development runoff volume and water quality. New construction, which means new and relocated roadway projects shall apply these criteria, which are:

- 20% of disturbed impervious areas is computed as meadow cover in good condition.
- All non-forested disturbed pervious areas are computed as meadow cover in good condition.

In accordance with Chapter 102, these criteria shall not be applied to reconstruction and 3R projects (see Definitions in Section 13.7.B). DEP specifically exempts projects that are centered around the existing highway from these criteria by including the phrase, "except for repair, reconstruction or restoration of roadways or rail lines," with criteria above. Not to be confused with Chapter 102 *road maintenance activities*, which are altogether exempt from Chapter 102 permit requirements, these projects shall use the actual existing soil-cover complexes to compute pre-development runoff volumes, including for water quality.

Chapter 102 does allow for exceptions to the former assumption (related to existing impervious areas) if the "existing site contains impervious area and the existing site conditions have public health, safety or environmental limitations." To be exempted, it must be demonstrated that "it is not practicable to satisfy the requirement" and "the stormwater volume reduction and water quality treatment will be maximized to the extent practicable."

Actual existing cover conditions should always be used for peak rate calculations.

5. Discharge Point. Chapter 102 permits require identification of all "discharge points" during and post construction. A discharge point (DP) is equivalent to an MS4 outfall or observation point; the difference is that MS4 outfalls are limited to U.S. Census Urbanized Areas. A DP is herein defined as a location in which runoff from an area of earth disturbance does one of the following:

- Concentrates and drains into a surface water within the right-of-way.
- Discharges through a flow dispersion SCM (e.g., level spreader) prior to draining into a surface water within the right-of-way.
- Leaves the legal right-of-way via waters of the Commonwealth other than surface waters (e.g., human-made drainage ditches, natural ephemeral channels).
- Enters an MS4 that is not operated by the Department.

Pipes that discharge to a waterbody through a bridge abutment or wall of a culvert are DPs. Bridge scuppers are also DPs, but they can be counted as one instead of each individually. Each swale, ditch, or gutter should be mapped as separate DPs, even when they are near each other, such as around bridges. For example, if there are ditches that discharge to a stream in four quadrants of a bridge, each ditch outlet to the stream should be mapped as a DP. Per DEP's instructions, DPs must be identified and labeled sequentially on the plan using three numerical digits, starting with 001.

Sheet flow that originates as sheet flow from the land surface and drains directly into a surface water is not considered a DP. Culverts that convey a stream or other waterbody are not, by themselves, a DP. A daylighted pavement underdrain is also not to be counted as a DP.

6. Point of Analysis. A point of analysis (POA) is where stormwater quantity and quality are analyzed to demonstrate control and management in accordance with Section 102.8(g) of Chapter 102. A POA is located at the receiving surface water and may be within the right-of-way (onsite) or outside of the right-of-way (offsite). When it is located onsite, a POA is also a DP. The net stormwater volumes, peak rates, and pollutant loads resulting from roadway improvements and any proposed stormwater control measures are calculated at the POA.

A single POA is sufficient for watercourses with drainage areas of at least 1.0 mi^2. When runoff from the project area enters the watercourse at multiple locations, the POA is the point furthest downstream that receives runoff from the project site.

It may be appropriate to establish more than one POA for watercourses with drainage areas less than 1.0 mi^2. A "10% rule" may be used as a starting point. If the project site area is less than 10% of the watercourse's drainage area, a single POA will normally be adequate. Otherwise, multiple POAs may be more appropriate, and the project area to any POA should generally not exceed 10% of the watercourse's drainage area.

A POA is also established for each lake, pond, and wetland receiving runoff from earth disturbance areas of the project. A wetland that is regularly flooded by an adjacent watercourse does not require its own POA.

Regardless of the numerical runoff standards being applied or where the POA is located, the integrity of stream channels must be preserved, and the physical, biological and chemical qualities of the receiving stream must be maintained and protected. The key is looking at post-construction stormwater runoff quantities, locations, and characteristics, coupled with the size, sensitivity, and orientation of receiving surface waters. The analysis should allow the designer to draw conclusions about the effects that stormwater discharges from the project site will have on receiving surface waters or discharges from the right-of-way.

Significant changes in drainage area characteristics to a DP contributing to an offsite POA may indicate the need for further evaluation at the DP. For example, if the proposed peak flow rate to an ephemeral stream is significantly higher compared to the existing condition, an evaluation of the stability of the channel and potential effects of spillover into properties adjacent to the channel downstream may be warranted. The channel pathway below the DP to the nearest stable outflow should be evaluated for accelerated erosion during a 10-year, 24-hour storm event. In cases where an increase is necessary and it causes a significant encroachment onto private property, the Department may wish to obtain an express easement from the property owner for the affected areas.

D. Act 167 SMPs and Municipal Ordinances. State highway projects must be designed in accordance with the standards of Act 167 SMPs that are current and approved by PA DEP. These SMPs are normally developed at the county level and then are reviewed and approved by PA DEP. Municipalities within the boundaries of the watershed(s) in the SMP subsequently adopt stormwater ordinances based on the model stormwater ordinance in the SMP. The Department is not required to comply with local stormwater ordinances, including ordinances adopted under an Act 167 SMP. Consistency only with the SMP approved by PA DEP is required. Additionally, since Act 167 requires that SMPs be periodically reviewed and revised at least every five years, consistency with the SMP is only required if it has been revised in accordance with the Act. However, the Department strives to maintain good relations with local municipalities and, on a case-by-case basis, will incorporate provisions in local ordinances when feasible and practicable. Municipal stormwater ordinances should be used to design SCMs on a project only when directed by the Department.

If consistency with an approved and current Act 167 SMP is not practicable, the design standards in Section 13.7.C shall be applied, and the SMP should be followed to the extent practicable.

PA DEP's eMapPA website is useful for determining if all or a portion of a project is within a watershed or county with an approved Act 167 SMP. The most current information for approved Act 167 SMPs is provided through PA DEP's website: https://www.dep.pa.gov/Business/Water/CleanWater/StormwaterMgmt/Pages/Act-167.aspx.

E. Special Protection Surface Water Discharge Analysis. For portions of projects that discharge to special protection surface waters (HQ, EV), failure to eliminate the net change in runoff volume or rate for the 2-year, 24-hour storm will require the use of ABACT BMPs as part of the Chapter 102 permit. To satisfy the special protection surface water discharge requirements, non-discharge alternatives must be implemented to the extent practicable if they exist. If non-discharge alternatives do not exist, then the net change must be managed using ABACT BMPs. ABACT is defined in Section 13.7.B. The analysis should also affirm that the chosen ABACT BMPs fully manage the net change. The analysis is summarized in the Chapter 102 permit.

F. Impaired Surface Waters. PA DEP has an ongoing program to assess the quality of surface waters in Pennsylvania, identify those that are not attaining designated and existing uses, and designate those non-attaining surface waters as "impaired." Assessments are performed for four protected uses of surface waters: aquatic life, potable water, recreation, and fish consumption. For example, the assessment of the aquatic life use is a measure of the health of the aquatic communities such as benthic macroinvertebrates (insects, worms, crustaceans) and fish. An impaired waterbody with respect to aquatic life use means that the overall aquatic community (fish, macroinvertebrates, plants, and algae) is not healthy and there are pollutants or pollution that needs to be minimized

or eliminated to return the waterbody to a healthy condition. Reasons for an impairment may be one or more point sources, like industrial or sewage discharges, or non-point sources, like abandoned mine lands, agricultural runoff, or urban runoff. Examples of the pollutants that can cause impairment are metals, pH, mercury or siltation.

To the extent practicable, when a project is within an impaired watershed, the stormwater design should reduce the sources and pollutant loads that potentially contribute to the impairment. Chapter 102 permits require evaluation of non-discharge alternatives (see definitions) for discharges to surface waters impaired for siltation, suspended solids, turbidity, water/flow variability, flow modifications/alterations, or nutrients. If non-discharge alternatives do not exist, the net change must be managed using ABACT BMPs.

G. Municipal Separate Storm Sewer Systems (MS4). The Department is required to obtain an NPDES permit as a state entity that designs, builds and maintains stormwater conveyance systems in support of transportation systems. The regulated features are Municipal Separate Storm Sewer Systems (MS4s) within U.S. Census urbanized areas that discharge to waters of the U.S. The Department's MS4 covers "conveyance systems owned and/or operated by PennDOT which are designated or used for collecting or conveying stormwater associated with PennDOT roads, highways, bridges and related structures." This includes SCMs which are legally considered appurtenances to PennDOT's conveyance or drainage systems and vehicle maintenance and operation facilities (e.g., stockpiles, county maintenance facilities, etc.). Activities involving MS4 should be coordinated with BOMO.

H. Riparian Buffers. PennDOT projects frequently involve stream crossings that result in earth disturbance within riparian buffers. Chapter 102 includes regulatory requirements for riparian buffers. Act 162 of 2014 amended the Pennsylvania Clean Streams Law to establish methods that can be used to meet riparian buffer requirements for NPDES permits (not all Chapter 102 permits). When read together, Chapter 102 and Act 162 provide the regulatory framework for riparian buffer requirements associated with NPDES permits.

The scope of projects subject to the riparian buffer regulatory requirements of Act 162 and Chapter 102 is relatively limited. The underlying Chapter 102 requirements related to riparian buffers are mandatory only for projects that discharge to surface waters with an HQ or EV designated use. Therefore, riparian buffer requirements only apply to projects requiring an Individual NPDES Permit with earth disturbance activities within 150 feet of a river, stream, creek, lake, pond, or reservoir with an HQ or EV designated use. Other Chapter 102 permits are not covered by Act 162.

PA DEP's published guidance on riparian buffer equivalency and offsetting and the Department's Publication 783, *Environmental Permitting Handbook*, contain useful information on determining applicability and designing the necessary SCMs to satisfy the regulations.

I. Stormwater Control Measures. A stormwater control measure (SCM) is a technique, measure, or structural control that is used for a given set of conditions to manage the quantity and improve the quality of stormwater runoff in a cost-effective manner. In the past, these were often referred to as stormwater best management practices (BMPs). Project-specific conditions and limitations will often dictate the type, number, and size of SCMs that are proposed to manage stormwater for a given project. Detailed information regarding the design, siting, risk considerations, and maintenance of SCMs is contained in Chapter 14 of Publication 584, *PennDOT Drainage Manual*, and Publication 888, *Stormwater Control Measures Maintenance Manual*.

1. Approved SCMs. The following list includes SCMs that are approved for use on PennDOT projects.

Non-Structural SCMs

- Minimize Compaction
- Preserve Trees and Re-vegetate Using Native Species
- Impervious Disconnection
- Slope Roughening

Restoration SCMs

- Riparian Buffer Restoration
- Landscaping and Planting
- Soil Amendment Restoration
- Stream Restoration and Stabilization

Structural SCMs

- Vegetated Swale
- Bioretention
- Vegetated Filter Strip
- Media Filter Drain
- Subsurface Infiltration Trench
- Infiltration Detention Basin
- Infiltration Berm
- Wet Detention Basin
- Stormwater Wetland
- Dry Detention Basin
- Dry Ultra-Extended Detention Basin
- Level Spreader and Flow Dispersion
- Regenerative Step Pool

2. SCMs Requiring Special Approval. These SCMs cannot be proposed for implementation within Department right-of-way without prior approval from the District Stormwater Maintenance Coordinator.

- Street Sweeping (non-structural)
- Permeable Pavement
- Constructed Stormwater Filter
- Manufactured Treatment Devices
- Subsurface Detention Storage

J. Soil Profile and Infiltration Testing. One of the primary PCSM objectives is to manage the net change in runoff volume from pre- to post-construction conditions. Meeting this objective requires a thorough evaluation of the project site for opportunities to include infiltration SCMs. A preliminary site evaluation for infiltration capabilities must be conducted early in the design process to identify areas suitable or unsuitable for infiltration SCMs. Such an evaluation should be conducted by a professional(s) experienced in soil classification, geology, and the design of infiltration SCMs. Appropriate steps are as follows.

1. Evaluate Existing Features.

a. Perform an initial desktop investigation documenting existing conditions at the site (e.g., soil types, karst, surface waters).

b. Review the proposed plan improvements (e.g., locations of cut/fill, utilities, new pavement).

c. Identify potential infiltration SCM locations and testing locations and conduct a site visit that includes surface and shallow depth field observation.

2. Preliminary Testing.

a. Perform at least one infiltration test for every 40,000 ft^2 outside of the roadway cross-section and within the project site boundary (minimum of 4 tests).

b. Collect soil profile data or a soil characterization test pit/bore hole within 100 ft of all infiltration tests to demonstrate that testing was performed in infiltration-conducive soil horizons.

When infiltration is not feasible, it is incumbent on the PCSM Plan preparer to demonstrate that environmental or public safety limitations exist that preclude the use of infiltration SCMs.

If potential areas have been identified, a preliminary plan shall be developed including location(s) and type(s) of the proposed infiltration SCM(s), bottom elevations and a preliminary grading design. Those areas must then be explored to find infiltration SCM design saturated hydraulic conductivity rates.

Section 14.19 of Publication 584, *PennDOT Drainage Manual*, contains additional information regarding procedures for soil characterization and infiltration testing.

K. SCM Inventory Data. The Bureau of Maintenance and Operation (BOMO) maintains an inventory of Department owned SCMs. The data in this inventory serves as the basis of the Department's SCM maintenance program. The inventory contains numerous data fields for each SCM that provides information on an SCM's type, location, age, treatment capabilities, and inspection needs. Any new SCMs designed for a Department project must be added to the inventory to ensure the SCM is properly tracked, inspected, and maintained. The PCSM Plan designer is responsible for submitting new SCM data with the PCSM Plan. The procedure is as follows.

1. PCSM Plan designer completes the SCM inventory spreadsheet in conjunction with the PCSM Plan submission in Final Design.

2. Upon approval of the Chapter 102 permit Notice of Termination, the District Stormwater Maintenance Coordinator (or designee) updates the SCM inventory spreadsheet as necessary to reflect any changes to the design during construction.

3. BOMO reviews the final data and assigns an SCM identification code to begin the post-construction phase of SCM tracking, inspection and maintenance.

L. PCSM Plan. A PCSM Plan is required for all Department projects that require a Chapter 102 permit and SCMs are implemented. In accordance with Publication 14M, Design Manual Part 3, *Plans Presentation*, Chapter 6, the PCSM Plan shall be handled as an "Also Included" Plan. Note that on projects that do not require a Chapter 102 permit, any information for SCMs included in the project may be incorporated into the Construction Plan - a separate PCSM Plan is not required. All standards for PCSM Plan drawings are contained in Publication 14M, Design Manual Part 3, *Plans Presentation*, Chapters 6 and 15. These standards are based upon the requirements in Chapter 102. Each PCSM Plan must be accompanied by supporting calculations.

M. PCSM on Non-Chapter 102 Permit Projects. A PCSM analysis involving quantitative runoff calculations and SCM design is typically only required for projects with a Chapter 102 permit or Act 167 SMP requirements. However, other PA DEP permits also require compliance with Chapter 102. Specifically, this section addresses PCSM requirements for a project that meets the following criteria:

- Less than 25 acres of Road Maintenance Activity (RMA) - no E&S Permit (102.5.b)
- Less than 1 acre of non-RMA earth disturbance - no NPDES permit (102.5.a)
- Includes earth disturbance that is not RMA
- Requires a 25 Pa Code Chapter 105 (Water Obstruction and Encroachment) permit

Section 102.8 in Chapter 102 describes the requirements for PCSM. It states new PA DEP permits that require compliance with Chapter 102 must develop a written PCSM Plan. All Chapter 105 permits require compliance with Chapter 102, as they must have a written ESPC Plan (Section 105.13.g). Chapter 102 RMAs, however, do not require compliance with Section 102.8, even if a Chapter 105 permit is required; the non-RMA areas must comply.

Examples of projects that typically meet the criteria described above include:

- Rehabilitation or replacement of stream crossings
- Slide repair adjacent to a surface water
- Safety improvements that encroach upon a floodway or floodplain or impact wetlands

A common characteristic of these types of projects is that they have a negligible change in stormwater runoff. Therefore, SCMs are often not necessary to achieve compliance with Chapter 102. The requirements can be satisfied by including a narrative in the report for the ESPC Plan that describes how the items in Section 102.8.b of Chapter 102 have been considered. Each surface water that receives runoff from the project should be addressed separately. Additional guidance on satisfying Chapter 102 requirements related to PCSM for these types of projects can be found in Chapter 14 of Publication 584, *PennDOT Drainage Manual*.

N. Off-site Discharges. Some areas within the limits of earth disturbance of a project may not have direct access to surface waters to discharge stormwater runoff. Off-site stormwater discharges are those that do not reach a surface water prior to leaving the legal right-of-way. The Department is expected to secure an easement (e.g., common law or express) providing legal authority for the off-site discharge, unless waived by the property owner. When construction activities will not result in a change in volume or peak rate of stormwater runoff (for all storm events) to existing swales, ditches, storm sewers or similar structures, the existing common law easement can be relied upon.

An express easement should be evaluated when there will be a change in volume or rate of stormwater (for all storm events). The Department is not required to provide or identify its legal right to discharge stormwater in order to obtain a Chapter 102 permit.

The Department must evaluate the effect construction and post-construction stormwater discharges may have on accelerated erosion to down slope or adjacent properties, regardless of whether there are increases in the volume or peak rate of stormwater discharges from a project site. Documentation must be provided that demonstrates that the discharge will not cause accelerated erosion on the properties along the flow path to a surface water.

The following information must be provided with the permit:

- On the ESPC Plan and PCSM Plan drawings, identify all properties and property owners that will or may receive off-site stormwater discharges from the project site until discharges reach surface waters.
- On the ESPC Plan and PCSM Plan drawings, identify the flow path from discharge point to the confluence with a surface water. In addition, identify the soil types, erodibility factors and vegetative cover of the flow path.
- In the written narrative portion of the ESPC Plan and PCSM Plan, provide an analysis that demonstrates that the proposed volume and peak rate of stormwater discharging to the flow path will avoid, minimize, or mitigate accelerated erosion or sedimentation for storm events up to and including the 10-year/24-hour storm.

If stormwater discharges will enter a municipal separate storm sewer system (MS4) or a combined sewer system with combined sewer overflows (CSOs), and there will be an increase in runoff volume or peak rate, the Department must provide written consent from the MS4 or CSO permittee before a Chapter 102 permit can be issued.

CHAPTER 14

COST ESTIMATING

14.0 INTRODUCTION

Cost Estimates that are to be provided by design agencies as part of the Preliminary Engineering Report are to be set up in accordance with the following format. The cost estimate for final design shall be the standard Form 407.

The procedures used in the preparation of the cost estimate are as follows:

1. Individual estimates are to be provided for each anticipated construction section. These shall also be combined into a total estimate.

2. Unit prices and an explanation of their basis are to be included as a separate item in the report.

3. All back-up data used to develop unit prices and Form D-405, Work Sheet for Cost Estimate, are to be supplied to the District, but not as a part of the Study Report.

4. It is expected that the estimate be developed from the best available information such as models using computerized historical bid data. For example, a cost per kilometer for guide rail may be used in a Preliminary Engineering Report while a specific breakdown of items shall appear in the Form 407.

5. The cost estimate format is a guide and it may have to be modified for special cases.

6. The cost estimate should be based on the anticipated letting date of the project.

Related material can be located in Publication 352, *Estimating Manual*.

COST ESTIMATE

_____ County Sta _____ To Sta _____
SR _____ Section _____ Length _____

Project Description: _____
_____
_____

1.	Pavement, Base and Shoulder	_____
2.	Grading and Drainage	
	(a) Grading	_____
	(b) Drainage and Minor Structures	_____
3.	Grade Separation Structures	
	(a) Location	_____
	(b)	_____
	(c)	_____
4.	Interchanges	
	(a) Location	_____
	(b)	_____
	(c)	_____
5.	Other Bridges and Tunnels	
	(a) Location	_____
	(b)	_____
	(c)	_____
6.	Retaining Walls	_____
7.	Highway Hardware (Guide Rail, Median Barrier, Right-of-Way Fence, Signing, Lighting, etc.)	_____
8.	Frontage Roads and Service Roads	
	(a) Location	_____
	(b)	_____
	(c)	_____
9.	Environmental Considerations	
	(a) Erosion Control	_____
	(b) Landscaping	_____
	(c) Safety Rest Areas	_____
	(d) Protection of 4(f) Lands	_____
	(e) Etc.	_____
10.	Mobilization	_____
11.	Maintenance and Protection of Traffic	_____
SUBTOTAL		
12.	Contingencies (Normally 10% of Lines 1 to 10)	_____
SUBTOTAL (Total Construction Cost)		
13.	Right-of-Way (Acquisition, Relocation and Demolition)	_____
14.	Utilities	_____
15.	Engineering	_____
TOTAL PROJECT COST		_____

D-405

WORK SHEET FOR COST ESTIMATE

COMPILED BY: _____

DATE: _____

COUNTY	S.R. & SEC.	F.A.I. RTE.	STATION	TO STATION	LENGTH

PROJECT DESCRIPTION:

ITEM	UNIT	QUANTITY	UNIT COST	SUB-TOTAL	TOTAL $1,000
1. BASE: SURFACING: SHOULDERS					
A. _____ PAVEMENT					
B. SUB-BASE					
C. PAVED SHOULDERS					
D. SHOULDERS					
E. SUBGRADE					
F. MEDIAN PAVEMENT					
G. SIDEWALK					
H.					
				TOTAL	
2. A GRADING					
(1) EXCAVATION					
(2) BORROW					
(3) CLEARING & GRUBBING					
B DRAINAGE & MINOR STRUCTURES					
				TOTAL	
3 GRADE SEPARATIONS (WITHOUT RAMPS)					
TYPE _____					
A. STRUCTURE					
B. CROSSROAD ADJUSTMENTS (INCLUDES ALL COSTS					
INCIDENT TO CHANGES IN CROSSROADS)					
C.					
				TOTAL	
4 INTERCHANGE: COMPLETE*					
A. PAVEMENT					
B. SUB-BASE					
C. SHOULDERS					
D. EXCAVATION					
E. BORROW					
F. STRUCTURES					
G. DRAINAGE					
H. SLOPE TREATMENT					
I. ROADSIDE IMPROVEMENT					
J. CROSSROAD ADJUSTMENT					
K. GUARD RAIL					
L. MEDIAN BARRIER					
M. R/W FENCE					
N. CURBS					
O. SUBGRADE					
P. LIGHTING					
Q. SIGNING					
R. TRAFFIC CONTROL DEVICES					
S.					
				TOTAL	
5 OTHER BRIDGES: TUNNELS					
TYPE _____					
A.					
B.					
C.					
D.					
				TOTAL	
6 WALLS					
A.					
B.					
C.					
				TOTAL	
7 HIGHWAY HARDWARE (MAIN LINE ONLY)					
A. GUARDRAIL: COMPLETE					
B. LIGHTING					
C. SIGNS					
D. R/W FENCE (TYPE _____)					
E. TRAFFIC CONTROL DEVICES					
F. MEDIAN BARRIER					
				TOTAL	
8 FRONTAGE ROADS & SERVICE ROADS					
A.					
B.					
C.					
				TOTAL	
9 ENVIRONMENTAL CONSIDERATIONS					
A. EROSION CONTROL					
B. LANDSCAPING					
C. REST AREAS					
D. SCENIC OVERLOOKS					
E. TEMPORARY WATER POLLUTION CONTROL					
F.					
				TOTAL	
10 MOBILIZATION				TOTAL	
11 MAINTENANCE & PROTECTION OF TRAFFIC				TOTAL	
SUB-TOTAL, ITEMS 1 TO 11 INCLUSIVE					
12 CONTINGENCIES (10% OF ITEM 1 TO 11)				TOTAL	
SUB-TOTAL (TOTAL CONSTRUCTION COSTS)					
13 RIGHT OF WAY					
A. LAND ACQUISITION					
B. RELOCATION PAYMENTS					
C. DEMOLITION					
				TOTAL	
14 UTILITY ADJUSTMENTS					
15 ENGINEERING					
TOTAL ESTIMATED COST					

(* DO NOT INCLUDE ANY MAIN LINE QUANTITIES)

BLANK PAGE

CHAPTER 15

RESERVED FOR FUTURE USE

BLANK PAGE

CHAPTER 16

BICYCLE FACILITIES

Refer to Publication 13, Design Manual Part 2, *Contextual Roadway Design*, Chapter 14, Bicycle Facilities.

BLANK PAGE

CHAPTER 17

EMERGENCY ESCAPE RAMPS

Refer to Publication 13, Design Manual Part 2, *Contextual Roadway Design*, Chapter 23, Emergency Escape Ramps.

BLANK PAGE

CHAPTER 18

TEMPORARY ROADS AND BRIDGES

18.0 INTRODUCTION

These guidelines are to be used to design temporary roads and bridges where traffic will be maintained at the construction site of a bridge replacement or rehabilitation project on a two-lane highway. These guidelines are not recommended for four-lane highways or situations which require high speed transitions.

Temporary roads and bridges do not have to be designed as a permanent facility since they will only be in use for a short time (often only a few months or one construction season).

Each temporary road and bridge is to be designed to be compatible with the existing site conditions, the volume and composition of the traffic being maintained and an acceptable operating speed for the temporary condition.

Designs must consider the location of existing utility facilities and their proposed relocations to avoid or reduce interference with these utility facilities.

Any temporary right-of-way or easements required for temporary roads and bridges are to be determined and included in the project Right-of-Way Plan so it can be acquired as part of the overall right-of-way.

Public Utility Commission approval will be required for construction of temporary roads or bridges across railroads.

Engineering judgement is to be used with these guidelines. If the existing site readily lends itself to a temporary road design with design features higher that the minimums of these guidelines, do not force the design down to these minimums.

Thorough consideration of the composition of the maintained traffic is important. Logging trucks, large coal trucks or large recreational vehicles, for example, can impose requirements that will dictate the design.

Dimensions given in these guidelines are to be considered minimums, which may have to be increased to provide a design compatible with specific project conditions.

The decision to maintain traffic at the site of a bridge project or to provide a detour or other option is to be made in accordance with Publication 10C, Design Manual, Part 1C, *Transportation Engineering Procedures,* Chapter 3.

Environmental evaluation of temporary roads and bridges is to be performed as part of the evaluation of the permanent bridge construction project. Current Department policy regarding environmental evaluations of temporary roads and bridges is to be followed (see Publication 10C, Design Manual, Part 1C, *Transportation Engineering Procedures,* Chapter 3.)

Each project that requires a temporary road or bridge will include temporary road and bridge special provisions in the proposal, specifically prepared for that project.

18.1 DEFINITIONS

For the purpose of these guidelines, the following definitions apply:

1. Temporary Stream Crossing. A temporary crossing of a stream with multiple pipes, pipe arches or similar conduits covered with fill material.

2. Temporary Bridge. A temporary crossing of a stream or other topographic feature consisting of a bridge superstructure with an appropriate substructure.

3. Temporary Road. A temporary roadway forming the approaches to a temporary stream crossing or temporary bridge.

18.2 TRAFFIC CONTROL

Adequate advance warning signs and informational and regulatory signing on the temporary road itself is very important. If warranted, rumble strips, additional signing, regulatory speed control, painted pavement edge lines, warning lights, temporary lighting (dusk to dawn or generator-driven construction lights) or similar devices should be specified. Appropriate narrow bridge or bridge posting signs must be incorporated, as required.

The transition from the existing highway to the temporary road is highly critical. Drivers should not be surprised by an unexpected situation where there is insufficient time to make a proper decision or maneuver.

A Traffic Control Plan shall be prepared as required by Publication 212, *Official Traffic Control Devices*, and Publication 213, *Temporary Traffic Control Guidelines*, and made a part of the Plans, Specifications, and Estimate (PS&E) for the project. Coordination with the District Traffic Unit during design is important to insure that proper traffic control devices are incorporated.

18.3 TEMPORARY ROAD

Temporary roads can be single-lane or two-lane. Single-lane temporary roads can be used if they provide adequate capacity to handle the traffic.

A. Single-Lane Temporary Road. Single-lane temporary roads can be considered when a study/capacity analysis indicates that any resultant traffic backup (queue) will be acceptable.

Traffic on single-lane temporary roads can be controlled by stop signs or traffic signals.

Obtain peak hour traffic counts to use with the Highway Capacity Manual to perform capacity analyses, when necessary.

1. Stop Sign Control. Consider controlling traffic with stop signs, placed at both ends of the single lane, when the Average Daily Traffic (ADT) is approximately 1500 vehicles per day or less and the length of temporary road is approximately 45 m (150 ft) or less.

Use stop signs only if sight distance is available so that vehicles stopped at each end of the temporary road can clearly see each other.

In fog-prone areas, do not use stop sign control, use traffic signal control.

For ADTs slightly under or above 1500 vehicles per day and/or temporary road lengths greater than 45 m (150 ft), perform a study/capacity analysis to determine if traffic queues will be acceptable.

2. Traffic Signal Control. Consider using traffic signals for traffic control of single lanes, where stop sign control is not acceptable.

Perform a study/capacity analysis, using hourly volumes, to determine if traffic queues will be acceptable.

If traffic signal control can not be used, a two-lane temporary road should be provided.

3. Geometry. Abrupt, sharp curvature in the transition area from the existing highway to the temporary road is to be avoided.

Clear sight distance to the stop sign or traffic signal, on the approach to these traffic control devices, is essential. Sight distance and adequate length of roadway to bring a vehicle to a complete stop from its operating speed must be provided. Consider the placement of any guide rail, barrier or temporary signing when checking for clear sight distance.

Any vertical curves must provide headlight stopping sight distance to satisfy this requirement.

The entire length of the temporary road, between the stop signs, should be visible to a driver stopped at the stop sign.

Where traffic signals are used, a study should be performed by the designer (in coordination with the District Traffic Unit) to determine the acceptable operating speed through the temporary road area. It is recommended that a minimum operating speed of 25 km/h (15 mph) be provided.

4. Pavement and Shoulder Width. The minimum pavement width recommended for single-lane roadways is:

ADT of 500 or less = 3.0 m (10 ft)
ADT greater than 500 = 3.6 m (12 ft)

Minimum shoulder widths of 0.6 m (2 ft) are recommended.

When selected material surfacing is specified for pavement material, paving should be provided for the entire pavement and shoulder width. Minimums would be:

ADT of 500 or less = 4.2 m (14 ft)
ADT greater than 500 = 4.8 m (16 ft)

When higher-type pavement material is specified, consider paving the entire pavement and shoulder width, if this is more economical than constructing separate shoulders of different material.

Pavement widths may have to be widened, through horizontal curves, to provide adequate turning radii for trucks.

B. Two-Lane Temporary Road. When a single-lane temporary road cannot adequately handle the traffic, two-lane temporary roads will be used.

1. Geometry. In the transition area from the existing highway to the temporary road, the horizontal curvature should be designed so that the operating speed of a vehicle will be reduced by no more than 25 km/h (15 mph).

Clear sight distance that permits the driver to see the transition and appropriate advance signing is important.

Provide appropriate superelevation for the operating speed within the transition curvature.

2. Pavement and Shoulder Width. The minimum pavement width recommended for two-lane roadways is:

ADT of 8,000 or less = 6.0 m (20 ft)
ADT greater than 8,000 = 6.6 m (22 ft)

Minimum shoulder widths of 0.6 m (2 ft) are recommended.

When selected material surfacing is specified for pavement material, paving should be provided for the entire pavement and shoulder width (a minimum of 7.2 m (24 ft)).

When a higher-type pavement material is specified, consider paving the entire pavement and shoulder width if this is more economical than constructing separate shoulders of different material.

Pavement widths may have to be widened, through horizontal curves, to provide adequate turning radii for trucks.

C. Guide Rail. Guide rail is to be provided on temporary roads when required for embankment protection, protection at roadside obstacles (especially where the obstacles are potentially hazardous because of roadway geometry) and non-traversable hazards (such as permanent bodies of water). Refer to Chapter 12.

Guide rail connection to bridge railing of temporary bridges and appropriate runout of the guide rail is to be provided.

Concrete median barrier may be used for guide rail, especially if temporary stream crossings have a minimum fill (cover) over the pipes which would cause interference with driving guide rail posts. If concrete barrier is used, the effect on sight distance must be checked carefully to ensure that it is acceptable.

If there is a concern that concrete median barrier would act as a dam if high water overtopped a temporary stream crossing, an alternative is to use guide rail attached to a concrete slab as per Publication 72M, *Roadway Construction Standards*, for use over buried or underground structures.

D. Side Slopes. Generally, side slopes, in cut or fill sections on temporary roads, are to be as steep as feasible, based on the stability of the soil and rock involved. Slopes of 1V:1H are considered maximum, with flatter slopes to be used if necessary.

Gabions may be specified to retain slopes, but not as a bridge abutment.

E. Pavement Type and Shoulder Type. Pavement and shoulders of temporary roads are to be maintained in a smooth condition during use. Special provisions for adequate maintenance and dust control must be included in the PS&E.

1. Selected material surfacing is recommended as the pavement material for temporary roads with low ADTs and/or low speeds.

2. Consideration can be given to using adequately compacted milled bituminous material as the pavement material to control potholes and dust and for medium ADTs.

3. For higher ADTs, consideration should be given to using bituminous material as the pavement material. Bituminous concrete base course, without a top material, will normally be adequate for the short period of time the temporary road will be in use.

4. Selected material shoulders are recommended as a minimum. Compacted milled bituminous material and higher type shoulders should be considered if a high-type pavement is used.

5. Pavement and shoulder thicknesses should be determined based on ADT, percent of trucks, expected life of the temporary road and stability of the subgrade, in consultation with the District Materials/Geotechnical Engineer and Pavement Engineer.

18.4 TEMPORARY BRIDGE

Temporary bridges will be designed using current Department bridge design methodology found in Publication 15M, Design Manual, Part 4, *Structures*, Volume 1, Part A, Chapter 5, including consideration of geometric constraints (truck turning patterns, etc.) as per this Manual.

18.5 WATERWAY OPENING - PA DEP PERMIT

The application for the Pennsylvania Department of Environmental Protection's (PA DEP) Waterway Obstruction Permit must include the proposed waterway opening for the temporary bridge or crossing. This required waterway opening is to be designed so that the temporary condition will not cause any significant damage by flooding adjacent property.

A. Temporary Stream Crossing (Pipes). The minimum flood that can be used is for the 2.33-year design storm ($Q_{2.33}$). A greater recurrence interval (such as the 10-year design storm (Q_{10})) shall be used if warranted by site conditions and engineering analysis.

B. Temporary Bridge. Refer to Publication 15M, Design Manual, Part 4, *Structures,* Volume 1, Part A, Chapter 5 for guidelines to size the waterway opening.

BLANK PAGE

CHAPTER 19

CONSIDERATIONS FOR ALTERNATIVE TRANSPORTATION MODES

19.0 INTRODUCTION

Many of the Commonwealth's transportation corridors must not only consider vehicular movements, but also the movement of people, distribution of goods, and provision of essential services. The needs of bicyclists, pedestrians, and transit users must be considered in designing all roadway projects. Sidewalk networks should be well connected with opportunities for regular, safe street crossings. On collector and arterial roadways, bike lanes or wide curb lanes can encourage people to bike rather than drive for short and moderate distance trips. If a roadway is designed to discourage vehicular speeding, it can be comfortably used by pedestrians and bicyclists alike. Transit-friendly design should support a high level of transit activity. By encouraging alternative transportation, communities can reduce vehicular trips and minimize congestion.

It should be acknowledged that there are potential trade-offs between vehicular mobility and bicycle, pedestrian, and transit mobility. A balance should be sought in attaining these goals on all projects.

The following sections discuss considerations for providing pedestrian facilities, bicycle facilities, and public transportation. Specific guidance on selecting design values is provided for bicycle facilities in Chapter 16 and for pedestrian facilities in Chapter 6.

19.1 BICYCLE FACILITIES

Reconstruction or restriping projects for arterial and collector roadways should consider the best means of accommodating bicyclists. Guidance on selecting a bicycle facility should be provided by a bike network plan that identifies the most important bicycle generators in the community, and provides recommendations on how to best accommodate bicyclists between those destinations. Bicycle generators include schools, parks, major shopping areas, employment centers, transit stations, and large residential developments.

A bike network plan should identify roadways for bike lanes, compatible shoulders or shared lanes, and shared use paths. In many cases, the selected roadways will be arterial and collector roadways. Bicyclists prefer to travel these roadways for the same reason that motorists do: they provide the most direct route to key destinations.

The Bicycle and Pedestrian Checklist, which is found in Publication 10X, Design Manual, Part 1X, *Appendices to Design Manuals 1, 1A, 1B, and 1C,* Appendix S, provides an evaluation tool to complete in the planning and design processes.

19.2 PEDESTRIAN FACILITIES

A. Sidewalks. Sidewalks are desirable to support both mobility and safety. A basic strategy for improving pedestrian conditions is to provide sidewalks along all roadways with developed land uses. In 2000, FHWA announced that bicycling and walking facilities will be incorporated into all transportation projects unless "exceptional circumstances" exist. However, the provision of sidewalks has usually been a local responsibility, falling under the municipality's authority to approve new land uses and supporting infrastructure. No state law applies to the installation of sidewalks in commercial or residential areas in Pennsylvania. Therefore, the most fundamental action that can be taken by any municipality to improve pedestrian facilities is to amend its land development ordinance to require the installation of sidewalks for new land uses.

B. Sidewalk and Buffer Widths. Chapter 1, Tables 1.3 through 1.7 (Matrices of Design Values) present roadside widths for sidewalks and buffers with different land use contexts. Dimensions are provided for "clear sidewalk widths," or the section of sidewalk unencumbered by street furniture and not immediately next to buildings. The presence of "buffers", comprised of landscaping in suburban areas, and street furniture in urban areas, is important to the comfort level and perceived safety of pedestrians.

C. Medians. On multi-lane roadways, medians can be among the most desirable features for pedestrians. At signalized intersections in which the pedestrian crossing phase is the minimum required by the MUTCD, and pedestrians are unable to complete the crossing of the entire intersection, a median will permit them to safely wait until the next pedestrian crossing phase.

Along suburban corridors at unsignalized locations, medians play an even more vital role. Because of the distance typically separating signalized intersections in most suburban areas, pedestrians are frequently reluctant to cross roadways only at these locations. Although an important goal of urban design in any community should be to maximize the numbers of pedestrians crossing at signalized intersections, many pedestrians will continue to conduct mid-block crossings. The hazard of these crossings can be mitigated, to some extent, by the installation of physical medians.

D. Crosswalks. AASHTO's *Guide for the Planning, Design and Operation of Pedestrian Facilities* recommends midblock crosswalks under the following circumstances:

- Already substantial number of midblock crossings.
- Due to existing and planned pedestrian generators, pedestrians are highly unlikely to cross the street at the next intersection.
- Spacing between adjacent intersections exceeds 200 m (660 ft).
- Adequate sight distance is available.

Midblock crosswalks should typically not be installed within 90 m (300 ft) of signalized intersections. On low-speed, two-lane roadways in urban contexts, particularly with very high levels of pedestrian activity, mid-block crosswalks may be considered within 60 m (200 ft) of signalized intersections.

Examples of treatments to accompany mid-block crosswalks include:

- Raised medians.
- Advanced yield markings and signs.
- Overhead or post mount flashing sign.
- In-pavement light.
- In-street "yield to pedestrian" signs.
- Half signals.

Found below are possible options for the installation of midblock crosswalks, or crosswalks at unsignalized intersections, on different roadway types:

1. Regional Arterial. Installation of midblock crosswalks on regional arterials should involve the most intensive treatments. These should only be used on roadways of 60 km/h (40 mph) or less. A raised median is preferable to accompany mid-block crossings on multi-lane roadways. Advanced yield markings, warning lights, and high-visibility markings may also be considered.

2. Community Arterial. On multi-lane roadways, a raised median and advanced yield markings are preferred. Accompanying lights are recommended for two-lane roadways of 60 km/h (35 mph) or above, as well as multi-lane roadways. All crosswalks installed should be high visibility. Curb extensions or "bulbouts" may be considered on any street with off-street parking.

3. Main Street. "Yield to Pedestrian" signs mounted on the roadway centerline are preferred for this roadway sub-type, along with high-visibility markings. Curb extensions or "bulbouts" are less critical, but may be considered for streets with on-street parking. They will provide better visibility of and by pedestrians, and should not reduce the number of on-street parking spaces, since parking within 7.6 m (25 ft) of the crosswalk would be prohibited in any case.

4. Community Collector. On multi-lane roadways, a raised median and advanced yield markings are preferred. Accompanying lights may be considered for two-lane roadways of 60 km/h (35 mph) or above, as well as multi-lane roadways. All crosswalks installed should be high visibility. Curb extensions or "bulbouts" are preferred on any street with on-street parking.

5. Neighborhood Collector. Crosswalks should be accompanied by pedestrian warning signs or "Yield to Pedestrian" signs mounted on the roadway centerline. Crosswalks may be high visibility depending on traffic volumes and speeds. Curb extensions or "bulbouts" to accompany on-street parking may also be considered.

6. Local Road. Crosswalks should be accompanied by pedestrian warning signs.

19.3 PUBLIC TRANSPORTATION

A. Vehicle Types. The bus types seen most often in urban areas are intercity buses (motor coaches), city transit buses, and articulated buses. For these bus types, the 2011 AASHTO Green Book, Chapter 2 lists the typical dimensions (Table 2-1b) and minimum turning radii (Table 2-2b).

Vehicle width does not include both the right and left side mirrors, each of which can add another 300 mm (12 in) to the vehicle width.

B. Bus Stops. The primary considerations regarding bus stops are their identification, placement and physical features, which are discussed below. If transit agencies have guidelines on bus stops, they should be incorporated in the design.

1. Identification. A sign at each bus stop should indicate the agency's name and logo; bus route and destination; schedule; and the agency's telephone number and website. Parking prohibitions should be identified by pavement markings or by another sign (e.g., No Parking Bus Stop Sign, R7-107A, as found in Publication 236M, *Handbook of Approved Signs*).

2. Placement. Bus stops are placed at the nearside or farside of an intersection, or at midblock locations. Below are basic factors that should be considered in bus stop placement:

- At intersections, a consistent pattern of stops (e.g., all nearside or all farside) enables transit patrons to readily comprehend where they need to board a bus.
- At intersections where more than one bus route operates, and in particular where buses operate on cross streets, consideration should be given to the ability to conveniently transfer to other bus routes.
- Stops should be located close to major passenger generators.
- Curb space should be provided to accommodate the desired number of buses and passenger waiting areas.

Bus stops at intersections are preferred because they provide the best pedestrian accessibility from both sides of the street as well as the cross streets. They also provide for the most convenient transfers to intersecting bus routes.

In limited instances, a midblock bus stop will be suggested by the presence of major generators. Compared to conditions at adjacent intersections, midblock bus stops lessen sight distance problems for pedestrians and motorists, produce fewer pedestrian conflicts, and reduce pedestrian congestion at passenger waiting areas.

A major concern with midblock bus stops is that they increase the walking distance for pedestrians who must cross at intersections, and, in so doing, can encourage people to cross the street midblock (i.e., "jaywalk"). This is problematic on high-speed roadways.

At intersections, farside bus stops are typically preferred to nearside stops, especially in urban centers or other areas with high pedestrian volumes. One study found that about 2% of pedestrian crashes in urban areas, and 3% of crashes in rural areas, are related to bus stops. A common pattern is when the pedestrian steps into the street from in front of a stopped bus. This pattern is associated with nearside stops more than farside stops.

Other considerations related to bus stops at intersections include:

- Where it is not desirable to stop the bus in a travel lane and a turn-out is warranted, a farside stop (or even a midblock stop) is preferred.

- If a route requires a left turn, the bus stop should be placed on the farside after the left turn is completed. If this is not possible, a midblock bus stop is preferred, but must be located far enough from the intersection so that the bus can still maneuver into the proper left turn lane.

- If a route requires a right turn, or if there is a high volume of right turns at an intersection, the bus stop should be located at the farside location.

- If too many buses would utilize a farside stop and there is not enough room to extend the bus stop, a nearside location should be used instead.

- When an intersection is complex and has several dedicated turn lanes, farside bus stops are preferred because they are removed from the location where complex traffic movements are performed.

- At simple signalized intersections, nearside stops permit riders to discharge when they are stopped at red lights.

3. Geometrics. The bus stop area in which parking is prohibited must be long enough to permit buses to maneuver to and from the curb, and to accommodate the safe movement of pedestrians from the curb to the bus. The amount of distance required for a bus stop depends on four factors: (1) the type of bus stop; (2) the length of buses using the stop; (3) the number of buses using the stop; and (4) the posted speed limit of the roadway.

Curb space may be limited in some urban business districts, due to high demand for on-street parking. However, the municipality should not designate bus stops of inadequate length, since the bus will be unable to "dock" at the curb. In this situation, the driver will either "nose in" the vehicle or stop in the street, forcing passengers to step into the street, and not permitting the deployment of the wheelchair lift/ramp for disabled riders.

If space is highly constrained, the municipality may wish to forego mid-block bus stops, since they require the greatest length. The municipality may also consider the use of "bus bulbs." A bus bulb is a section of the sidewalk that extends from the curb of a parking lane to the edge of the through lane. Buses stop in the traffic lane instead of weaving into and out of the bus stop that is located in the parking lane. The bus bulb need only extend the length of the bus, and thereby saves parking spaces. However, because traffic behind is held up during passenger loading, the bus bulb is not preferred for heavily congested roadways.

C. Turn-outs. A turn-out is desirable for roadways where the posted speed limit is higher than 60 km/h (40 mph), at stops with a high number of passenger boardings and dwell times. These features allow buses to pull out of the flow of traffic to board and discharge passengers, thus not impeding the free flow of vehicular traffic.

When nearside bus stops have a turn-out, the "exit taper" length can be removed since it is assumed that the bus will utilize the intersection area to merge with traffic. Similarly, if farside bus stops have a turn-out, then the "entrance taper" length can be removed. If multiple buses will use the bus stop, then the "Total Bus Stop Length" can be increased by the length of the additional buses with an allowance of 3.0 m (10 ft) for separation between buses.

D. Bus Stop Characteristics. Other desirable characteristics of a bus stop include:

- Front and rear door clearances should be 1525 mm (5 ft) wide and 2440 mm to 3050 mm (96 in to 120 in) deep.
- All-weather, slip resistant surface in bus stop area.
- Slopes not to exceed 2% in boarding area.
- Vertical clearances of 2135 mm (84 in).
- No obstructions in boarding/discharging areas, and room for pedestrians to wait without entering the roadway and without impeding other pedestrian movements.
- Compliance with ADA standards, including ability to accommodate bus wheelchair lifts and/or ramps.
- Bus riders must be readily visible to satisfy traffic safety and security issues, with adequate lighting from adjacent parcels and street lights.

Bus stop spacing represents a trade-off between providing a high number of stops (thus increasing service coverage and maximizing ridership) while still allowing the transit service to operate at reasonable speeds and trip times. Table 19.1 summarizes typical bus stop spacing for the illustrated roadway typologies identified in Figure 1.2.

TABLE 19.1
BUS STOP SPACING

CONTEXT	STOPS	TYPICAL SPACING
Urban Core, Town Center	6 to 8 per kilometer (10 to 12 per mile)	135 m (450 ft)
Town/Village Neighborhood, Suburban Center	3 to 6 per kilometer (5 to 10 per mile)	225 m (750 ft)
Suburban Corridor, Suburban Neighborhood	3 to 4 per kilometer (4 to 6 per mile)	300 m (1,000 ft)
Rural	As needed	As needed

E. Bus Stop Amenities.

1. Passenger Waiting Shelters. Following are minimum design specifications for shelters:

- Three walls (a rear and two sides) with a minimum covered area of 4.5 m^2 (48 ft^2). For areas with space limitations, other types of shelters (e.g., umbrella or half-wall or canopies) may be used.
- Interior seating.
- A minimum front clearance of 1220 mm (48 in) (1525 mm (60 in) desirable) from the shelter to the edge of the curb.
- Minimum sidewalk around shelter (i.e., sides and rear) of 915 mm (36 in) (1525 mm (60 in) desirable).
- Display panel for route and schedule information, if not provided on information kiosk.

2. Seating. Bus stop seating increases patron comfort and reduces perceived waiting time. A bench should be at least 1830 mm (72 in) wide and placed 1220 mm (48 in) from the curb.

3. Information Kiosks/Boxes. These display schedules, maps and other information.

4. Other Customer Features. Consider providing trash receptacles, bicycle storage racks, public telephones, lighting, and landscaping.

INTENTIONALLY BLANK

CHAPTER 20

WILDLIFE CROSSINGS

Refer to Publication 13, Design Manual Part 2, *Contextual Roadway Design*, Chapter 21, Wildlife Crossings.

BLANK PAGE