

# SR 0083 Section 094
# Interstate 83 South Bridge Replacement Project
# Dauphin County

## ENVIRONMENTAL ASSESSMENT

October 2023

**HARRISBURG**
I-83 CAPITAL BELTWAY
SR 0083, SECTION 094
DAUPHIN COUNTY, PA


**Prepared by:**
District 8-0
2140 Herr Street
Harrisburg, PA 17103-1699


pennsylvania
DEPARTMENT OF TRANSPORTATION

U.S. Department of Transportation
Federal Highway Administration

**Cooperating Agencies:**
U.S. Army Corps of Engineers
U.S. Environmental Protection Agency

www.i-83beltway.com

# ENVIRONMENTAL ASSESSMENT
# for the
# SR 0083 SECTION 094 DAUPHIN COUNTY
# INTERSTATE 83 SOUTH BRIDGE REPLACEMENT PROJECT

**MPMS #113754**

Prepared by:
U.S. Department of Transportation
Federal Highway Administration
and
Pennsylvania Department of Transportation
Engineering District 8-0

Pursuant to 42 U.S.C. 4332(2)(c)and, as applicable:
Executive Order 11990, Protection of Wetlands;
Executive Order 11988, Floodplain Management;
Executive Order 12898, Environmental Justice; and
49 U.S.C. Section 303(c), Section 4(f)

Approved by: Jennifer M. Crobak Digitally signed by JENNIFER MAUREEN CROBAK Date: 2023.10.06 08:20:09 -04'00'
Date: _____

Jennifer Crobak, Acting Director of Planning, Environment, and Finance
Federal Highway Administration, Pennsylvania Division

**The following persons can be contacted for information regarding this project:**

Marwa Said, P.E., Project Manager and Assistant Bridge Engineer,
Penn DOT District 8-0, 2140 Herr Street, Harrisburg, PA 17103-1699;
Telephone: (717) 783-3773; email: msaid@pa.gov

Julia Moore, Senior Environmental Specialist, U.S. Department of Transportation (USDOT); Federal Highway Administration (FHWA) Pennsylvania Division, 30 North Third Street, Suite 700, Harrisburg, PA 17101;
Telephone: (717) 221-4585; email: Julia.moore@dot.gov

**You can also visit the project web page here:**
https://www.penndot.pa.gov/RegionalOffices/district-8/ConstructionsProjectsAndRoadwork/DauphinCty/Pages/I-83-South-Bridge-Project.aspx

# Summary

This Environmental Assessment (EA) for the I-83 South Bridge Project has been prepared to replace the EA previously made available on May 10, 2022, because PennDOT is no longer going to toll the John Harris Memorial Bridge (South Bridge) on Interstate 83 (I-83) over the Susquehanna River. This EA compares the effects of the Build Alternative without tolling to the No Build (or do nothing) Alternative.

The Pennsylvania Department of Transportation (PennDOT) and Federal Highway Administration (FHWA) have prepared this EA to identify and evaluate the environmental effects of replacing the I-83 South Bridge over the Susquehanna River, reconstructing the I-83 Front Street/2nd Street interchange and associated viaduct on the river's east shore in Dauphin County, and improving the I-83 Lemoyne interchange on the river's west shore in Cumberland County (hereafter referred to as the I-83 South Bridge Project).

The purpose of an EA is to determine if this project would have "significant" environmental effects. If FHWA determines that this project could have significant effects, then an environmental impact statement would be prepared.

## How can you be involved?

This EA is being released for a 30-day public review. Your input is important to helping PennDOT and FHWA understand the project area and potential impacts. Comments will be accepted until November 16, 2023. You can provide your comments in the following ways:

- Visit the website at I-83 South Bridge Project (www.penndot.pa.gov/i83SouthBridge)
- Email to: i83SouthBridge@pa.gov
- Mail to:
  PennDOT District 8-0, I-83 South Bridge Project
  Attn: Marwa Said
  2140 Herr Street
  Harrisburg, PA 17103
- Attend a public hearing in person or virtually. Public hearings offer an opportunity to provide testimony. To provide oral testimony in person at a public hearing register in advance at www.penndot.pa.gov/i83SouthBridge or by calling 717-743-1005, or in person at the public hearings:

**South Bridge Public Hearing #1**
November 1, 2023; 3:30–7:00 p.m.

***In-person location***
Hotel Indigo Harrisburg-Hershey
765 Eisenhower Blvd; Harrisburg, PA 17111

***Virtual Location***
www.penndot.pa.gov/i83SouthBridge

**South Bridge Public Hearing #2**
November 2, 2023; 3:30–7:00 p.m.

***In-person location***
Penn Harris Hotel
1150 Camp Hill Bypass; Camp Hill, PA 17011

***Virtual Location***
www.penndot.pa.gov/i83SouthBridge

# Why is this project being proposed?

The I-83 South Bridge Project is part of the larger *I-83 Corridor Master Plan*[1] (short title: *I-83 Master Plan*). The purpose of the *I-83 Master Plan* was to identify improvements that could be planned and programmed in the 11-mile corridor so design and construction could be accomplished in a fiscally responsible manner while meeting corridor-wide transportation needs. Several independent projects were identified in the I-83 corridor; the South Bridge Project, including the Lemoyne and Front Street/2nd Street interchanges, is one of the projects.

The current South Bridge, constructed in 1960, is approaching the end of its serviceable life. The dual, two-girder bridges comprising the bridge's main spans are considered fracture critical, meaning failure of one girder could lead to partial or total collapse of one or more spans. Similarly, the viaduct (bridge) that traverses from the east shore of the Susquehanna River to Cameron Street is approaching the end of its serviceable life.

The I-83 highway system through the project area is more than 50 years old and pavement on the majority of the corridor needs to be replaced. High traffic volumes (almost 125,000 average trips per day in 2016[2]) result in congestion that will worsen as traffic grows (predicted to exceed the existing available roadway capacity during the morning and afternoon peak hours by 2050). Congestion experienced in 2018 resulted in average travel speeds that dropped to as low as 32 to 46 miles per hour (mph) during morning commutes and 23 to 26 mph during afternoon commutes, as compared to uncongested conditions, which average 60 mph. Modeling predicts worsening congestion if nothing is done (24 mph northbound in the morning peak hour and 11 mph southbound in the evening peak hour by 2040).

**Project Purpose**

The project purpose is to improve traffic flow and safety on I-83 across the South Bridge, which is consistent with the overarching goal of the *I-83 Master Plan* to improve traffic flow and safety around the City of Harrisburg by providing upgraded transportation facilities.

The existing highway was constructed in accordance with design standards that were applicable 50 years ago. Current highway design standards provide improved safety and capacity features needed for today's high-speed, high-volume traffic. Consequently, there are operational safety concerns with the existing mainline, viaduct, and Lemoyne and Front Street/2nd Street interchange configurations.

Finally, the highway and local roadway network on the west shore impedes mobility for pedestrians and bicyclists to access adjacent communities, businesses, and places of employment within the project corridor, with connections severed by the Norfolk Southern Railroad and I-83. See **Chapter 1** for more details.

[1] https://www.i-83beltway.com/projects/i-83-master-plan.php
[2] 2016 data was used because it was the best available pre-COVID-19 pandemic data and is assumed to be representative of post-pandemic traffic.

# What is being proposed?

The only reasonable option to improve the I-83 South Bridge, the viaduct (bridge) from the Susquehanna River to Cameron Street, and the Lemoyne and Front Street/2nd Street interchanges in the project area is to improve the roadway on or near the existing alignment and to widen the South Bridge to the south. The no-build alternative would not meet the project needs, and realignment to the north would result in severe impacts to the densely developed residential, commercial, and industrial areas. Directly north of the South Bridge, the Dock Street Dam, the Lemoyne Wastewater and the Harrisburg Sewage Pump Station further constrain expansion northward.

The proposed I-83 South Bridge Project would consist of replacing the existing bridge with a wider bridge (widened to the south), reconfiguring the Lemoyne interchange on the west shore, and reconstructing the Front Street/2nd Street interchange which includes the underlying viaduct from the river to Cameron Street on the east shore. The project also includes replacing the S. 3rd Street Bridge over I-83 and the Norfolk Southern Railroad in Lemoyne with a wider and longer structure. **Figure ES-1** shows the plan view for the I-83 South Bridge Project; structures are shown in green and roadway is shown in orange. The South Bridge ends at the east shore riverbank where the viaduct then continues to Cameron Street. It is anticipated that construction would last approximately 6 to 8 years in total.

The current South Bridge has four northbound lanes and three southbound lanes. To accommodate traffic forecasts and improve safety, the proposed replacement bridge would need five lanes in each direction, with full inside and outside shoulders. With the widening of the South Bridge, modifications to the I-83 Lemoyne interchange west of the river would be needed. These modifications include: replacing the S. 3rd Street Bridge over I-83 and Norfolk Southern Railroad to accommodate a wider I-83 footprint; relocating the terminus of the I-83 southbound Lemoyne (Exit 41B) exit ramp; relocating the I-83 northbound entrance ramp; and realigning Lowther Street east of S. 3rd Street.

On the east shore in the study area, I-83 currently carries three lanes of mainline traffic and one auxiliary lane to support the Front Street/2nd Street Interchange in each direction on the existing viaduct bridge. The viaduct would be replaced with a 214-foot-wide bridge that accommodates six mainline through lanes (three in each direction), and an adjacent two-lane collector-distributor road system to facilitate on and off movements between the Front Street/2nd Street and Cameron Street interchanges. The Front Street/2nd Street interchange would be reconstructed in conjunction with the viaduct replacement. See **Chapter 2** for more details.

**Figure ES-1. South Bridge Project Plan View**

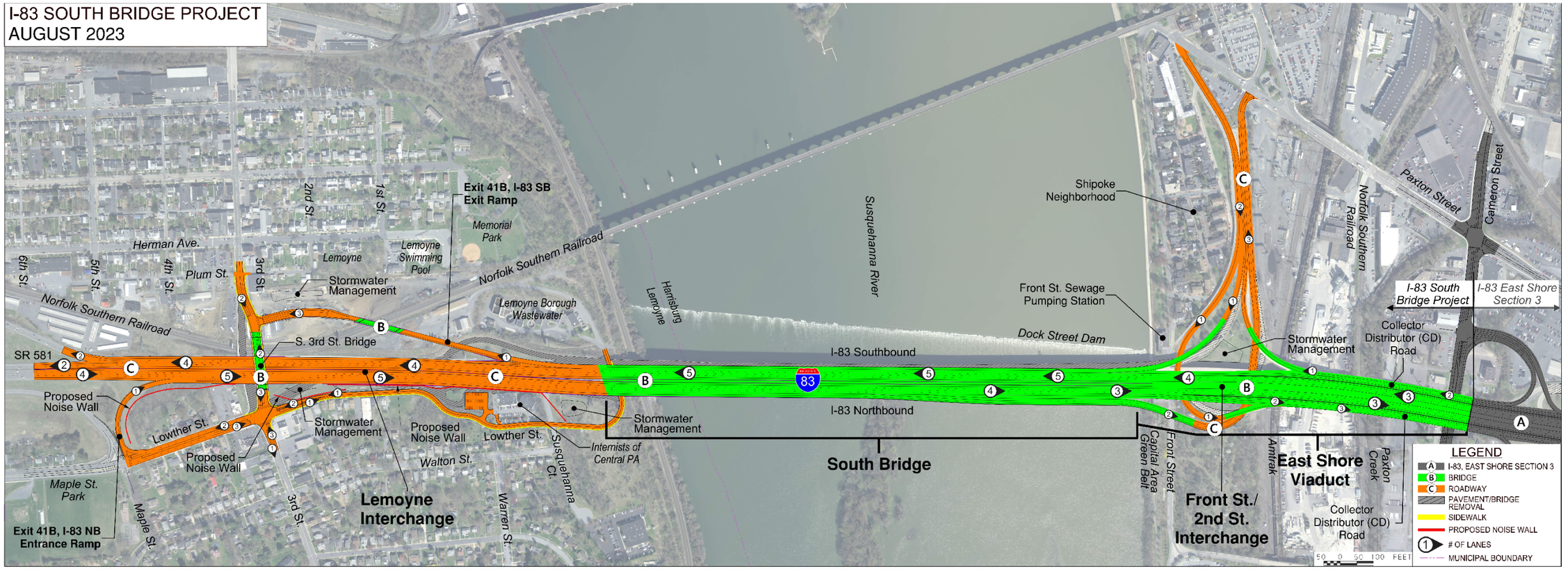


See **Chapter 2** and **Appendix A** for full-size diagrams.

## How will this project be funded?

PennDOT has identified a preliminary construction cost estimate of $1.1 to $1.3 billion for the I-83 South Bridge Project. The I-83 South Bridge is currently funded through the right-of-way acquisition phase on the Transportation Improvement Plan (TIP). The viaduct from the eastern riverbank to Cameron Street is fully funded on the TIP through construction. Additional funds for final design and construction of the South Bridge are included in PennDOT's Twelve-Year Program (TYP). The project is also programmed on the Harrisburg Area Transportation Study's Long Range Transportation Plan (LRTP).

## What are the potential environmental impacts?

**Chapter 3** discusses anticipated environmental impacts for resources likely to be affected by the I-83 South Bridge Project. Each resource section includes a discussion of the current environmental conditions to establish a baseline for analyzing the environmental impacts of building the project and not building the project. The proposed build alternative would not impact the following resources and no further discussion is presented: coastal zones, wild and scenic rivers, national natural landmarks, wildlife sanctuaries/refuges, important bird and mammal areas, state forest land, state game lands, unique geological features, productive agricultural resources, Section 6(f) resources, Stafford Act properties, and national historic landmarks.

**Table ES-1** summarizes key potential impacts of building and not building the project. Readers should consult **Chapter 3** and associated technical reports for additional details.

**Table ES-1. Impact Summary**

| Resource Topic | No Build Alternative | Build Alternative | Proposed Mitigation Summary |
|---|---|---|---|
| Surface Water Resources | • No fill in the river; no impacts<br>• If the existing bridge fails and part or all falls, the river would be affected<br>• Existing South Bridge deck is 8.5 acres/0.75 acres of piers<br>• Existing South Bridge shades 8.5 acres of river<br>• Existing Paxton Creek bridge deck is 0.08 acre/no piers; shades 0.08 acre; creek channel is concrete-lined. | • Temporary fill in the river 4.02 acres from west shore temporary access road<br>• Temporary construction bridges (4 separate bridges); each of the 4 bridges will impact approximately 3.22 acres of deck/0.02 acre for support piers<br>• South Bridge deck 14.33 acres/1.77 acres of piers; Paxton Creek bridge deck 0.12 acre/no piers<br>• South Bridge would shade 0.58 acre of submerged aquatic vegetation (SAV) and impact 0.1 acre for pier placement<br>• During construction, 0.66 acre of SAV would be impacted<br>• Proposed South Bridge would shade 14.33 acres of river; Paxton Creek bridge would shade 0.12 acre of creek<br>• Note: Susquehanna River is not "navigable" through the project area due to the Dock Street Dam immediately upstream of the bridge; however, because of construction activities in the area PennDOT worked with the City to update an ATON plan for the area which the City will maintain post-construction | • Obtain a Clean Water Act Section 404/PADEP Chapter 105 permit to address the temporary construction and permanent impacts to surface water resources<br>• Remove temporary fill after construction is complete and restore an estimated 1,000 linear feet of river shoreline<br>• Prepare a bridge maintenance project plan for the U.S. Coast Guard<br>• Prepare an erosion and sedimentation control plan<br>• Install dam warning signs and buoys up and downstream of the Dock Street Dam in accordance with the Final Aids to Navigation (ATON) plan worked out with the resource agencies and the City of Harrisburg<br>• Monitor the SAV beds before, during, and after construction to ensure they re-establish naturally<br>• Remove existing bridge piers to 24 inches or more below the river bottom. |

| Resource Topic | No Build Alternative | Build Alternative | Proposed Mitigation Summary |
|---|---|---|---|
| Wetlands | • No impacts<br>• Existing bridge does not shadewetlands | • 0.31 acre of temporary wetland island impact due to construction bridges<br>• 0.03 acre permanent impact for bridge pier on island wetland<br>• 0.41 acre of vegetation cutting on island wetland (includes area of temporary wetland impact due to construction bridge)<br>• Proposed bridge would shade 0.22 acre of island wetland | • Obtain a Clean Water Act Section 404/PADEP Chapter 105 permit to address the temporary construction and permanent impacts to wetlands<br>• Purchase credits from a mitigation bank to off-set the permanent wetland impact; this could also be achieved using an in-lieu fee program, using a PennDOT wetland bank, or a combination of these options; details would be determined during permitting |
| Floodplains | • No permanent or temporary impacts<br>• If the existing bridge fails, the floodplain would be affected | • Slight decrease in permanent flood hazards<br>• Temporary impact during construction would not affect additional structures based on modeling | • Develop a plan to address potential ice dams and flooding during construction, including removal of equipment from the temporary construction bridges when prudent |
| Wildlife and Habitat | • No impacts | • Construction could result in temporary impacts on SAV and fish species inhabiting the river<br>• As discussed above, there would be impacts to the island wetland, and some fill along the western shoreline as part of the temporary construction access to build the South Bridge | • Replant the island and re-establish the shoreline once the temporary construction bridge/causeway is removed<br>• Clear trees from the river island but do not grub to maintain root structure and stability of the island<br>• Design the construction causeway to include temporary construction bridge sections (trestles) to ensure fish and eel passage is maintained during construction<br>• Monitor the SAV beds before, during, and after construction to ensure they re-establish naturally<br>• Restrict in-stream work (construction/ removal of causeways) from May 1 to June 15 due to smallmouth bass spawning |

| Resource Topic | No Build Alternative | Build Alternative | Proposed Mitigation Summary |
|---|---|---|---|
| Invasive Species | • More bridge maintenance could increase the spread of invasive species | • Construction equipment could spread invasive species | • Follow PennDOT's invasive species guidance and best management practices (BMPs; PennDOT Publication 756 [2014]) during construction to minimize the potential for invasive species to take root or spread during construction<br>• Obtain permit to comply with quarantine and treatment procedures for the spotted lanternfly during construction |
| Threatened and Endangered Species | • Northern long-eared bat spring staging/fall swarming habitat; no impact | • Northern long-eared bat spring staging/fall swarming habitat; | • Tree cutting in the project area will not be done between May 15 and August 15 |

| Resource Topic | No Build Alternative | Build Alternative | Proposed Mitigation Summary |
|---|---|---|---|
| Transit Systems, vehicular and commercial traffic | • Congestion and safety issues would persist<br>• More frequent maintenance would result in more frequent bridge closures<br>• Weight restrictions and eventual bridge closure would be necessary<br>• Increasing congestion would adversely affect reliability for local and long distance travelers, and transit routes using the existing bridge<br>• Increased maintenance closures or eventual closure of the existing bridge would increase congestion and safety issues on alternate routes and detour routes, adversely affecting travel and transit services on those routes | • Congestion and safety problems remedied, benefitting local and long distance travelers, as well as, transit routes using the proposed South Bridge and S. 3rd Street Bridge<br>• During construction, short delays or detours may be necessary | • Stage construction of the new South Bridge structures, the new S. 3rd Street Bridge, and the viaduct from the eastern end of the South Bridge to Cameron Street to maintain travel lanes by constructing the new structures adjacent to the existing ones, then shifting traffic onto the new structures<br>• Coordinate with Capital Area Transit and Rabbittransit to reduce impacts to service during project construction<br>• Install warning signs, speed restrictions, detours, and work zone safety measures during the construction period based on a Maintenance and Protection of Traffic Plan<br>• Prepare a Traffic Management Plan, including details on communicating with travelers, City of Harrisburg officials, emergency service providers, school districts and businesses to keep them informed of temporary detour routes, lane closures, and construction timing. The plan will include effective approaches to communicate with environmental justice (low-income and minority populations) communities |

| Resource Topic | No Build Alternative | Build Alternative | Proposed Mitigation Summary |
|---|---|---|---|
| Pedestrian and Bicycle Travel | • Increased maintenance closures or eventual closure of the existing bridge would increase congestion and safety issues on alternate and detour routes for pedestrians and bicyclists | • Replacement of the S. 3rd Street Bridge would provide improved bicycle and pedestrian facilities<br>• During construction, short delays or detours may be necessary<br>• During construction the Capital Area Greenbelt (Greenbelt) Trail would be relocated around the construction staging area; trail continuity would be maintained in this way throughout construction | • Maintain bicycle and pedestrian across S. 3rd Street Bridge during construction<br>• See mitigation for Transit Systems, vehicular and commercial traffic; the Maintenance and Protection of Traffic Plan and Traffic Management Plan will include provisions for pedestrians and bicyclists<br>• Temporarily re-route the Capital Area Greenbelt (Greenbelt) Trail around the construction staging area on the east shore during construction; include improvements to the trail to offset effects on this recreational resource |
| Land Use and Community Cohesion | • Increased maintenance closures or eventual closure of the existing bridge would increase congestion and safety issues on alternate routes and detour routes, adversely affecting nearby neighborhoods | • Consistent with adopted plans<br>• Replacement of the S. 3rd Street Bridge would provide improved neighborhood connections | • See mitigation for Transit Systems, vehicular and commercial traffic |

| Resource Topic | No Build Alternative | Build Alternative | Proposed Mitigation Summary |
|---|---|---|---|
| Relocations and Displacements | • No impacts | • Approximately 22 parcels would require a temporary construction easement or aerial easement<br>  ○ One business is affected by temporary construction easements needed for construction of the viaduct on the east shore (business may be able to continue operations during construction)<br>• 13 partial (but permanent) acquisitions anticipated:<br>  ○ One business is affected by the southbound off ramp of the Lemoyne Interchange, including demolition of structures (business may continue operation on its remaining property)<br>  ○ Requires construction staging in an area currently occupied by a homeless encampment<br>• 1 total acquisition of an undeveloped parcel; no structures on this parcel | • Conduct full (one anticipated) and partial property acquisitions in accordance with the Uniform Relocation Assistance and Real Property Acquisitions Policies Act of 1970, as amended; Title VI of the Civil Rights Act of 1964; and the Pennsylvania Eminent Domain Code of 1964<br>• Coordinate with the City of Harrisburg, Dauphin County, and Capital Area Coalition on Homelessness regarding project schedule and services they can offer to assist in addressing the homeless encampment in the bridge construction staging area on the east shore |
| Local and Regional Economy | • No impacts<br>• If the bridge is closed for travel, or portions of the bridge fail, long-term impacts to the local and regional economy would occur | • Minor tax revenue loss<br>• Construction spending would result in a temporary increase in regional economic activity | • None are proposed |

| Resource Topic | No Build Alternative | Build Alternative | Proposed Mitigation Summary |
|---|---|---|---|
| Community Facilities and Services | • No impacts<br>• If the bridge is no longer safe for travel, or portions of the bridge fail, community services would be substantially affected | • No direct adverse effects to emergency services providers, school districts, or recreational facilities<br>• In Lemoyne, short-term impacts to school bus routes may occur as occasional detours or lane restrictions may be needed during the replacement of the S. 3rd Street Bridge and re-alignment of Lowther Street.<br>• Reduced congestion would benefit emergency services providers<br>• During construction the Capital Area Greenbelt (Greenbelt) Trail would be relocated around the construction staging area; trail continuity would be maintained in this way throughout construction<br>• Loss of nine trees identified as having a memorial plaque associated with their planting along Capital Area Greenbelt (Greenbelt). | • Incorporate Americans with Disabilities Act-accessible sidewalks to improve safety and accessibility for non-motorized travelers where sidewalks are being incorporated or replaced on the west shore in Lemoyne<br>• Coordinate with Capital Area Transit and Rabbittransit to reduce impacts to service during project construction<br>• Temporarily re-route the Capital Area Greenbelt (Greenbelt) Trail around the construction staging area on the east shore during construction; include improvements to the trail to offset effects on this recreational resource<br>• Coordinate with Capital Area Greenbelt Association (CAGA) for the Greenbelt Trail and the memorial trees planted to the south of the bridge on the east shore of the river<br>• Develop a Traffic Management Plan<br>• Maintain access to the Susquehanna River for Harrisburg River Rescue and Emergency Services<br>• Prepare a Traffic Management Plan, including details on communicating with travelers, City of Harrisburg officials, emergency service providers, school districts and businesses to keep them informed of temporary detour routes, lane closures, and construction timing. The plan will include effective approaches to communicate with environmental justice communities<br>• See mitigation for Transit Systems, vehicular and commercial traffic |

| Resource Topic | No Build Alternative | Build Alternative | Proposed Mitigation Summary |
|---|---|---|---|
| Visual | • Visual conditions would not change<br>• If the bridge must be closed to travel, or portions of the bridge fail, views could substantially change | • Proposed bridge would be similar in height and length to the existing bridge; with its wider cross section, it may appear more prominent as a landscape feature<br>• Lemoyne mural would be affected | • Construct the I-83 South Bridge to be visually similar to the existing structure using a multi-girder bridge design<br>• Add architectural treatments and decorative features to the S. 3rd Street Bridge to provide consistent aesthetics along the I-83 corridor<br>• Develop architectural treatment plan for the viaduct, ramps, and retaining walls during final design<br>• Develop a landscaping plan to minimize the visual intrusion of the interstate in residential areas during final design<br>• Design the noise walls for a consistent aesthetic along the I-83 corridor; discuss the community-facing side of the noise wall with the benefited receptors during final design<br>• Continue to coordinate with Lemoyne Borough to identify a potential solution for the loss of the mural on the retaining wall along Lowther Street |
| Air Quality and Climate | • Increased congestion and more frequent maintenance would increase greenhouse gas (GHG) emissions | • No substantial air quality impacts<br>• Project is in an approved transportation improvement program and meets regional conformity requirements<br>• Increased capacity and reduced congestion and maintenance burdens would reduce GHG emissions | • None are proposed |

| Resource Topic | No Build Alternative | Build Alternative | Proposed Mitigation Summary |
|---|---|---|---|
| Noise | • Noise levels are predicted to approach or exceed the noise abatement criteria (NAC) at receptor sites within three of the six noise study areas (NSAs) identified in the corridor | • Noise levels are predicted to approach or exceed the NAC at receptor sites within four of the six NSAs in the corridor | • Continue assessing abatement alternatives for NSAs 2 and 3 through the final design of the project<br>• Solicit input from the benefitted receptors on proposed abatement features (for or against; if for, vote on aesthetics)<br>• Notify the public prior to scheduled nighttime construction activities<br>• Inform local officials of ways to prevent future highway traffic noise impacts on currently undeveloped lands in accordance with PennDOT Publication 24 (2019), Section 6.2 |

| Resource Topic | No Build Alternative | Build Alternative | Proposed Mitigation Summary |
|---|---|---|---|
| Hazardous and Residual Waste | • No impact | • Impacts associated with excavation of potentially contaminated soils<br>• Clean up of areas of past contamination would benefit the area | • Perform Phase II and III investigations to inform final design<br>• Perform asbestos-containing materials and lead-based paint surveys for the demolition of any buildings or structures to identify appropriate worker safety, handling, and disposal procedures<br>• Include a plan for remediation of contaminated areas, if contamination is identified in the study area, in the Phase III assessment report<br>• Coordinate with Pennsylvania Department of Environmental Protection (PADEP) prior to any activities impacting WS-2, in accordance with its Environmental Covenant (EC), and comply with the EC during right-of-way acquisition and construction<br>• Prepare and implement special provisions for ES-2 during construction<br>• Ensure the contractor prepares and follows appropriate plans; conducts fill determinations of soils not used within the project corridor to ensure proper handling, transport and disposal of soils; and properly disposes contaminated soils at permitted waste facilities |

| Resource Topic | No Build Alternative | Build Alternative | Proposed Mitigation Summary |
|---|---|---|---|
| Cultural Resources | • No impact | • No effect on seven eligible historic properties; no adverse effect on five properties<br>• No archaeological sites within the area of direct effect | No mitigation is required; however, the following will be adhered to:<br>• Do not permit construction staging within any of the known historic or archaeological properties in the project vicinity<br>• Immediately stop construction activities in the area of discovery should there be an inadvertent discovery of cultural resources, pending PennDOT/FHWA coordination with the Pennsylvania Historical and Museum Commission and Native American Tribes or Nations |
| Energy | • No capacity would be added to the South Bridge or on the viaduct on the east shore<br>• Area travelers would continue to encounter congestion during peak hours, and traffic operations would continue to deteriorate<br>• Energy usage would increase over time as congestion worsens<br>• More frequent maintenance on the South Bridge and East Shore Viaduct would also lead to additional energy consumption for maintenance and repair equipment | • Increased capacity and reduced congestion resulting from additional travel lanes would improve travel speeds and reduce stop-and-go traffic and idling on I-83, resulting in less energy usage associated with congestion<br>• Maintenance activities would be lower | • Construct the South Bridge, viaduct and S. 3rd Street Bridge off line while maintaining traffic on the existing roadway/bridge to keep traffic moving during construction and reduce the amount of time vehicles would be idling, reducing overall fuel consumption during construction<br>• Encourage the contractor to implement sustainable materials and construction practices in constructing the project |

| Resource Topic | No Build Alternative | Build Alternative | Proposed Mitigation Summary |
|---|---|---|---|
| Construction | • No impact | • Temporary impacts to surface waters, wetlands, and submerged aquatic vegetation<br>• Temporary water surface elevation increases may occur due to temporary construction bridges. Increased water surface elevation would not affect additional structures based on modeling<br>• Construction equipment could spread invasive species<br>• Travel detours and delays could occur for travelers<br>• Use of heavy machinery and construction techniques could cause temporary noise, dust and vibration impacts | • Prepare a Preparedness, Prevention, and Contingency plan and implement the Erosion and Sedimentation Control Plan measures to avoid, minimize and control temporary construction-related pollution during construction<br>• Obtain a Clean Water Act Section 404/PADEP Chapter 105 permit to address the temporary construction impacts to water resources<br>• Develop a post-construction monitoring plan to ensure re-establishment of submerged aquatic vegetation beds and river shorelines<br>• Use temporary construction bridges for construction work to minimize temporary flood hazards<br>• See proposed mitigation for Wildlife and Habitat and Invasive Species<br>• Implement careful construction phasing and a Maintenance and Protection of Traffic Plan to minimize impacts on travel<br>• Perform all construction activities in accordance with 25 Pennsylvania Code Article III (Chapters 121–145, Air Resources) to ensure adequate control measures for emissions are in place<br>• Implement BMPs to minimize fugitive dust and construction noise impacts |

| Resource Topic | No Build Alternative | Build Alternative | Proposed Mitigation Summary |
|---|---|---|---|
| Section 4(f) | • No impact | • *De minimis* use of the Harrisburg City Parks 7 Parkway Plan/Capital Area Greenbelt | • The upper trail will remain open during construction via a temporary detour<br>• Work with CAGA regarding removal and replacement of the memorial trees and plaques<br>• Provide an improved parking area under the bridge<br>• Reconstruct the Greenbelt Trail ramp area at the southern side of the parking area<br>• Install fencing along the multi-use path and a barrier along Front Street<br>• Provide landscape plantings, bike racks, repair station, kiosk, benches, and pedestrian-scale lighting<br>• Restore the trail to its current condition and extend the upper trail through the improved parking area<br>• A comfort station with restrooms and a drinking fountain may be constructed, dependent on the development of a maintenance agreement with the City of Harrisburg |

| Resource Topic | No Build Alternative | Build Alternative | Proposed Mitigation Summary |
|---|---|---|---|
| Environmental Justice | • No impact | • No disproportionately high and adverse effect on low-income, minority, or other underserved populations in the regional study area<br>• Homeless encampment in parcel required for bridge construction and staging area on the east shore would need to be vacated<br>• Overall improved mobility for all traveling through or within the project area | • Coordinate with the City of Harrisburg, Dauphin County, and Capital Area Coalition on Homelessness regarding project schedule and services they can offer to assist in addressing the homeless encampment in the bridge construction staging area on the east shore<br>• Provide advanced notice to the unhoused community that they will need to vacate the area acquired by PennDOT for construction<br>• Once clearance and closure of the encampment has occurred, PennDOT will remediate the area for any health and safety concerns related to waste materials left behind by the homeless encampment |

## How have the public and agencies been involved?

Public outreach for the prior EA to replace the I-83 Bridge Project with tolling included on-demand public meetings (virtual) over 30-day periods in February/March 2021 and October/November 2021. These meetings were accessible via the project's website (I-83 South Bridge Project (penndot.gov)). Improvements on the east shore were also discussed, and multiple public and stakeholder meetings were held in late 2018. Agency coordination was conducted with appropriate federal, state, and local agencies to obtain information regarding the project area; identify concerns; and obtain feedback regarding the proposed project, including tolling of the bridge. Meetings were held with neighborhood groups, utility providers, elected officials, and state and federal permitting agencies. See **Chapter 4** for more details on the outreach efforts supporting this EA.

Additionally, in November/December 2020 and February 2021, PennDOT provided opportunities for public input on the *Alternative Funding: Planning and Environmental Linkages Study*[3] (short title: *Pathways Alternative Funding PEL Study*) via the Pathways Program's website. The Draft *Pathways Alternative Funding PEL Study* was available for formal public review and comment from April 29 to June 1, 2021, and was finalized in September 2021. See the Final *Pathways Alternative Funding PEL Study*[4] for more information on the outreach conducted to support decisions regarding tolling.

As the *Pathways Alternative Funding PEL Study* progressed, tolling of major bridges emerged as the most viable near-term solution. In February/March 2021, PennDOT began engaging the community, stakeholders, and legislators in the Pathways Program's Major Bridge P3 (MBP3) Initiative, which included announcing nine interstate bridges as candidates for bridge tolling, including the I-83 South Bridge.

An EA comparing the effects of the No Build Alternative and the Build Alternative with bridge tolling was prepared and was made available for official public review and comment on May 10, 2022. Public Hearings were scheduled to be held on May 25 and 26, 2022, but were cancelled when all work related to the MBP3 initiative ceased May 18, 2022 due to a court ordered injunction. Subsequently, Act 84 of 2022 amended the P3 law and revoked PennDOT's ability to implement mandatory tolls such as the proposed bridge tolling under the MBP3 initiative. As a result of the lawsuits and the subsequent enactment of Act 84 of 2022, PennDOT is moving the I-83 South Bridge Project forward, but without tolling.

This updated EA evaluates the effects of the project with tolling removed. The comments received during the previous EA comment period (May 10 to June 9, 2022) have been reviewed, considered, and where appropriate, additional information was incorporated into this updated EA.

[3] https://www.penndot.gov/about-us/funding/Pages/PEL-Study.aspx
[4] https://www.penndot.gov/about-us/funding/Documents/PennDOT-Pathways_PEL-Study.pdf

# Contents

Summary ..... ES-1
How can you be involved? ..... ES-1
Why is this project being proposed? ..... ES-2
What is being proposed? ..... ES-3
How will this project be funded? ..... ES-5
What are the potential environmental impacts? ..... ES-5
How have the public and agencies been involved? ..... ES-20
1.0 Introduction ..... 1-1
1.1 Project History ..... 1-1
1.1.1 I-83 Corridor Master Plan ..... 1-3
1.1.2 Greater Harrisburg Area Susquehanna River Bridges Master Plan ..... 1-3
1.1.3 Alternative Funding Planning and Environmental Linkages Study ..... 1-4
1.1.4 Logical Termini and Independent Utility ..... 1-5
1.2 Project Area ..... 1-7
1.3 Purpose and Needs ..... 1-8
1.3.1 Project Purpose ..... 1-8
1.3.2 Project Needs ..... 1-8
2.0 Alternatives ..... 2-1
2.1 Proposed Action ..... 2-1
2.1.1 Proposed South Bridge Alternative ..... 2-1
2.1.2 Construction ..... 2-9
2.2 Other Alternatives Considered ..... 2-13
2.2.1 No-build Alternative ..... 2-13
2.2.2 South Bridge Rehabilitation Alternatives ..... 2-14
2.2.3 East Shore Alternatives Considered ..... 2-15
3.0 Affected Environment and Environmental Consequences ..... 3-1
3.1 Introduction ..... 3-1
3.2 Natural Resources ..... 3-2
3.2.1 Introduction ..... 3-2
3.2.2 Methodology, Project Area, Sources ..... 3-2
3.2.3 Surface Water Resources ..... 3-2
3.2.4 Wetlands ..... 3-11
3.2.5 Floodplains and Flood Hazard Areas ..... 3-13
3.2.6 Vegetation and Wildlife ..... 3-16

3.2.7 Natural Resources Mitigation Measures ..... 3-22
3.3 Socioeconomic Analysis and Land Use ..... 3-23
3.3.1 Introduction ..... 3-23
3.3.2 Social and Demographic Environment ..... 3-23
3.3.3 Land Use and Planned Development ..... 3-30
3.3.4 Local and Regional Economy ..... 3-36
3.3.5 Community Facilities and Services ..... 3-39
3.3.6 Transit Systems ..... 3-43
3.3.7 Pedestrian and Bicycle Travel ..... 3-45
3.3.8 Temporary Construction Impacts ..... 3-47
3.3.9 Mitigation ..... 3-47
3.4 Visual Resources ..... 3-49
3.4.1 Introduction/Methods ..... 3-49
3.4.2 Affected Environment ..... 3-49
3.4.3 Environmental Consequences ..... 3-58
3.4.4 Mitigation ..... 3-60
3.5 Air Quality and Climate Change ..... 3-61
3.5.1 Introduction and Background ..... 3-61
3.5.2 Affected Environment and Screening Methodologies ..... 3-62
3.5.3 Environmental Consequences ..... 3-63
3.5.4 Mitigation ..... 3-66
3.6 Noise ..... 3-66
3.6.1 Introduction/Methods ..... 3-66
3.6.2 Affected Environment ..... 3-68
3.6.3 Environmental Consequences ..... 3-73
3.6.4 Mitigation ..... 3-75
3.7 Hazardous and Residual Waste ..... 3-76
3.7.1 Introduction/Methods ..... 3-76
3.7.2 Affected Environment ..... 3-76
3.7.3 Environmental Consequences ..... 3-85
3.7.4 Mitigation ..... 3-86
3.8 Cultural Resources ..... 3-87
3.8.1 Introduction/Methods ..... 3-87
3.8.2 Historic Properties ..... 3-88
3.8.3 Archaeological Resources ..... 3-91

3.8.4 Consultation ..... 3-92
3.8.5 Mitigation ..... 3-93
3.9 Energy ..... 3-93
3.9.1 Introduction/Methods ..... 3-93
3.9.2 Affected Environment ..... 3-94
3.9.3 Environmental Consequences ..... 3-94
3.9.4 Mitigation ..... 3-95
3.10 Construction Impacts ..... 3-95
3.10.1 Introduction/Methods ..... 3-95
3.10.2 Environmental Consequences ..... 3-95
3.11 Section 4(f) Resources ..... 3-101
3.11.1 Introduction/Methods ..... 3-101
3.11.2 Affected Environment ..... 3-102
3.11.3 Environmental Consequences ..... 3-105
3.11.4 Coordination ..... 3-107
3.11.5 Mitigation ..... 3-108
3.12 Cumulative Effects ..... 3-108
3.12.1 Introduction/Methods ..... 3-108
3.12.2 Boundaries ..... 3-111
3.12.3 Time Frame ..... 3-111
3.12.4 Summary ..... 3-121
3.13 Environmental Justice ..... 3-126
3.13.1 Introduction ..... 3-126
3.13.2 Methodology ..... 3-128
3.13.3 Study Area ..... 3-130
3.13.4 Affected Environment ..... 3-131
3.13.5 Environmental Consequences ..... 3-136
3.13.6 Mitigation ..... 3-137
3.13.7 Conclusion ..... 3-138
4.0 Public Involvement and Agency Coordination ..... 4-1
4.1 Public Involvement ..... 4-1
4.1.1 PEL Public Involvement ..... 4-1
4.1.2 EA Public Involvement ..... 4-2
4.2 Agency and Stakeholder Coordination ..... 4-6
4.2.1 PEL Agency Outreach ..... 4-6

4.2.2 Environmental Document-related Agency and Stakeholder Coordination ..... 4-7
4.3 Environmental Justice Outreach ..... 4-9
4.3.1 PEL Environmental Justice Outreach ..... 4-9
4.3.2 South Bridge-specific Environmental Justice Outreach ..... 4-10

## Tables

Table ES-1. Impact Summary ..... ES-6
Table 1-1. Comparison of 2016 and Current RMS/TIRe Traffic Volumes ..... 1-10
Table 3-1. Surface Water– Existing Conditions ..... 3-4
Table 3-2. Surface Water Impacts – Build Alternative ..... 3-8
Table 3-3. Wetland Impacts in the Project Area ..... 3-12
Table 3-4. Fish and Eel Migration Periods ..... 3-18
Table 3-5. Demographic Summary ..... 3-25
Table 3-6. Study Area Land Use ..... 3-30
Table 3-7. Study Area Zoning ..... 3-32
Table 3-8. PennDOT and FHWA Hourly Weighted Sound Levels (dBA) for Various Land Use Activity Categories ..... 3-67
Table 3-9. Noise Level Summary ..... 3-69
Table 3-10. Waste Sites of Potential Concern, West Shore[a,b] ..... 3-79
Table 3-11. Waste Sites of Potential Concern, East Shore[a,b] ..... 3-82
Table 3-12. Determination of Effect for Listed and Eligible Historic Properties in the APE ..... 3-90
Table 3-13. Section 4(f) Properties in the Project Vicinity ..... 3-104
Table 3-14. Section 4(f) Resources in the Project Vicinity ..... 3-105
Table 3-15. Reasonably Foreseeable Land Development Projects ..... 3-121
Table 3-16. Potential Cumulative Impacts[a] ..... 3-124
Table 3-17. Race, Ethnicity and Poverty Status in the South Bridge Project Area ..... 3-134
Table 4-1. Public Meetings (Chronological) ..... 4-3
Table 4-2. Agency and Stakeholder Meetings (Chronological) ..... 4-7

## Figures

Figure ES-1. South Bridge Project Plan View ..... ES-4
Figure 1-1. Study Area Map ..... 1-2
Figure 1-2. Independent Projects in the I-83 Corridor ..... 1-6
Figure 2-1. Project Overview ..... 2-4
Figure 2-2. Current South Bridge Cross-section ..... 2-5
Figure 2-3. Proposed South Bridge Cross-section ..... 2-5
Figure 2-4. Potential Bridge Rendering, Looking Northeast ..... 2-6
Figure 2-5. Current Viaduct Bridge Cross-section ..... 2-7

Figure 2-6. Proposed Viaduct Bridge Cross-section....2-7
Figure 2-7. Existing S. 3rd Street Bridge in Lemoyne....2-8
Figure 2-8. Proposed S. 3rd Street Bridge Configuration....2-8
Figure 2-9. Current I-83 South Bridge....2-9
Figure 2-10. I-83 South Bridge during Construction....2-9
Figure 2-11. I-83 South Bridge after Construction....2-9
Figure 2-12. Example Temporary Construction Bridge (Bonner Bridge Replacement Project, HDR)....2-11
Figure 2-13. Proposed West Shore Construction Access....2-12
Figure 3-1. Wetlands and Waters in the Study Area....3-5
Figure 3-2. Approved Aids to Navigation (ATON) Plan (Boating Exclusion Area)....3-11
Figure 3-3. Wetland Impacts in the Study Area....3-13
Figure 3-4. Floodplains and Flood Hazard Areas in the Project Area....3-15
Figure 3-5. Project Study Area Census Block Groups....3-24
Figure 3-6. CJEST Underserved Communities....3-29
Figure 3-7. Study Area Land Use....3-31
Figure 3-8. Local and Regional Economy....3-37
Figure 3-9. Study Area Community Facilities and Services....3-41
Figure 3-10. CAT and RabbitEXPRESS Transit Routes....3-44
Figure 3-11. View to the South of the Susquehanna River; Rail Line Along Western Riverbank from I-83 South Bridge....3-50
Figure 3-12. View to the South of the Susquehanna River, Wetlands and Island, and Western Riverbank from the Middle of I-83 South Bridge....3-50
Figure 3-13. View Looking South from the South Bridge; Susquehanna River, Islands, and Eastern Riverbank Visible; PennDOT DMV Building Visible on East Shore (left side of photograph)....3-50
Figure 3-14. Northeast View of Norfolk Southern Rail Bridge, Downtown Harrisburg City Buildings, and Eastern Riverbank....3-51
Figure 3-15. View North of the South Bridge, Susquehanna River, Norfolk Southern Rail Bridge, Lemoyne, and Western Riverbank; City Island Visible Behind the Arched Piers of the Railroad and Market Street Bridges....3-52
Figure 3-16. Industrial Development East of Existing South Bridge, Viewed from Southbound Lanes of the Viaduct, Downtown Harrisburg Buildings Visible in Background....3-52
Figure 3-17. Industrial Development East of Existing South Bridge, Viewed from Northbound Lanes of the On Ramp to the Viaduct/I-83....3-53
Figure 3-18. Existing South Bridge, Viewed from East Shore; Capital Area Greenbelt Trail along East Shore and Shipoke Neighborhood; Dock Street Dam Spillway Visible near Bridge Piers, and Norfolk Southern Rail Bridge is Visible at Upper Right....3-54
Figure 3-19. Views of Lemoyne Mural along Lowther Street from I-83 South Exit 41B (Lemoyne) Ramp....3-54
Figure 3-20. View to the West of Lowther Street Homes (left side) and Proximity to Lowther Street (center), I-83 South Exit Ramp, and I-83 Lanes....3-55
Figure 3-21. View to the North across Lowther Street to I-83 South Exit Lane and I-83 Travel Lanes Beyond; View from 254 Lowther Street....3-55

Figure 3-22. View from Lowther Street, West of S. 3rd Street ..... 3-56
Figure 3-23. View of S. 3rd Street Bridge Crossing over I-83, Looking East ..... 3-57
Figure 3-24. View of S. 3rd Street Bridge Crossing over I-83 and Rail Lines, Looking West ..... 3-57
Figure 3-25. View from S. 3rd Street Bridge Crossing over I-83 and Rail Lines, Looking West ..... 3-58
Figure 3-26. Bird's Eye View of Multi-girder Bridge Design Alternative from the West; Close-up View from the Capital Area Greenbelt on the East Shore ..... 3-59
Figure 3-27. The Proposed S. 3rd Street Bridge Would Look Similar to the SR-22 Jonestown Road Bridge (shown here) for Architectural Treatment and Protective Fence ..... 3-60
Figure 3-28. Noise Study Areas and Impacts (Lemoyne West Shore) ..... 3-71
Figure 3-29. Noise Study Areas and Impacts (East Shore) ..... 3-72
Figure 3-30. Waste Sites of Potential Concern, West Shore ..... 3-77
Figure 3-31. Waste Sites of Potential Concern, East Shore ..... 3-78
Figure 3-32. Historic Properties in the APE ..... 3-89
Figure 3-33. Section 4(f) Resources in the Project Vicinity ..... 3-103
Figure 3-34. Cumulative Effects Study Area ..... 3-114
Figure 3-35. 1937 Aerial Photograph ..... 3-115
Figure 3-36. 1958 Aerial Photograph ..... 3-116
Figure 3-37. 1970 Aerial Photograph ..... 3-117
Figure 3-38. 2018 Aerial Photograph ..... 3-118
Figure 3-39. Minority and Low-Income Population Block Groups ..... 3-135

## Appendices

Appendix A: *South Bridge Design Plans* (August 2023)
Appendix B: U.S. Coast Guard Correspondence
Appendix C: Cultural Resources Correspondence
Appendix D: *De Minimis* Use Form
Appendix E: EA Distribution List
Appendix F: List of Preparers
Appendix G: Technical Support Documents
Appendix H: References
Appendix I: Acronyms/Abbreviations

# 1.0 Introduction

The Pennsylvania Department of Transportation (PennDOT), District 8-0, in coordination with the Federal Highway Administration (FHWA), is proposing the State Route (SR) 0083 Section 094 Dauphin County, Interstate 83 (I-83) South Bridge Replacement Project (hereafter referred to as the I-83 South Bridge Project) (**Figure 1-1**). The project evaluates replacing the bridge, which is approaching the end of its serviceable lifespan, replacing the viaduct (bridge) from the Susquehanna River to Cameron Street, and reconstructing the Lemoyne and Front Street/2nd Street interchanges on each side of the bridge.

Since this project is on the Interstate Highway System and requires federal permit approvals, PennDOT and FHWA are preparing the I-83 South Bridge Environmental Assessment (EA)[5] in accordance with the National Environmental Policy Act (NEPA) of 1969 to identify and evaluate the environmental effects of the proposed project and to identify measures to minimize harm. NEPA is a federal law that requires federal agencies to evaluate the environmental effects of their proposed actions before making a decision. This document also serves as the documentation required by Pennsylvania Act 120 (71 Pennsylvania Statute [PS] 512).

**Supporting documentation for Chapter 1 includes:**

- *I-83 Corridor Master Plan* (December 2003)
- *Greater Harrisburg Area Susquehanna River Bridges Master Plan Summary* (September 2020)
- *Evaluation of Purpose and Need, SR 0083 South Bridge, Dauphin County Memorandum* (July 2020)
- *Alternative Funding: Planning and Environmental Linkages Study* (September 2021)
- *I-83 East Shore Section 3 Traffic Alternative Analysis Report* (December 2018)
- *Conceptual Point of Access Study for I-83 Lemoyne Interchange Ramp Modifications* (June 2023)
- *South Bridge Logical Termini and Independent Utility Memorandum* (March 2022)

## 1.1 Project History

The current southbound John Harris Memorial Bridge (South Bridge) structure, associated interchanges on the east and west shores, and viaduct[6] on the east shore were constructed in 1960 as part of the modernization of the interstate system to connect Baltimore, Maryland, with Harrisburg, Pennsylvania. In 1960, the riveted steel bridge carried two-way traffic. In 1982, the South Bridge was widened, and a second, welded steel bridge was constructed to the south of the original bridge to carry northbound traffic. Also in 1982, the East Shore Viaduct was rehabilitated from near Cameron Street to the east shoreline of the Susquehanna River.

[5] An EA is a class of document prepared under NEPA, the purpose of which is to determine if a proposed federal action will have significant impacts. If an action will have significant impacts, then an environmental impact statement (EIS) would be prepared.

[6] A long, elevated roadway usually consisting of a series of short spans supported on arches, piers, or columns; https://www.merriam-webster.com/dictionary/viaduct.

**Figure 1-1. Study Area Map**

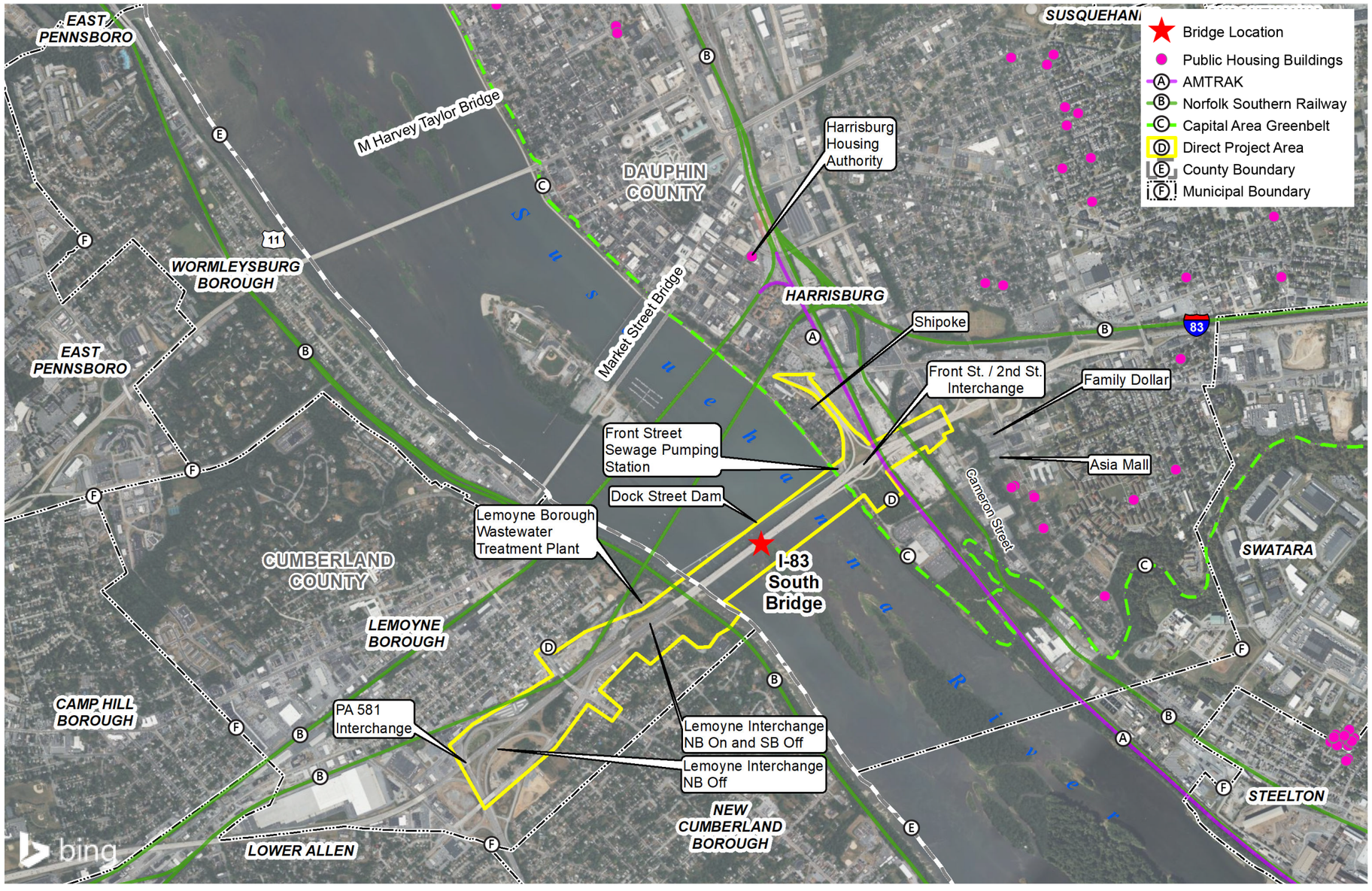


pennsylvania DEPARTMENT OF TRANSPORTATION

0 Miles 0.4

I-83 SOUTH BRIDGE EA

PATH: \\MAHPI-FILE01\GIS_PROJECTS\MISCMAPPING\PENNDOT_AUDREYH\7.2_WORK_IN_PROGRESS\MAP_DOCS\DRAFT\SOUTHBRIDGE_EA\2022_UPDATES\PURPOSE&NEED\SB_DIRECTSTUDYAREA_20230712.MXD - USER: FBRILHAN - DATE: 9/21/2023

The dual, two-girder bridges comprising the South Bridge main spans are considered fracture critical, meaning failure of one girder could lead to partial or total collapse of one or more spans. Since the 1990s, the South Bridge has undergone a number of retrofits and repairs.

### 1.1.1 I-83 Corridor Master Plan

**What is the I-83 Master Plan?**

The *I-83 Master Plan* is a long-range transportation planning study for the section of I-83 from the junction with I-81 in Dauphin County to the New Cumberland Interchange in Cumberland County.

The I-83 South Bridge Project is part of the larger *I-83 Corridor Master Plan*[7] (short title: *I-83 Master Plan*) (PennDOT 2003). The purpose of the *I-83 Master Plan* was to identify improvements that could be planned and programmed in the 11-mile corridor so design and construction could be accomplished in a fiscally responsible manner while meeting corridor-wide transportation needs. The master plan identified several sections of I-83 that needed to be upgraded to meet traffic demands in the area. Specific independent projects identified in the *I-83 Master Plan* included the Interstate 81 (I-81)/I-83 junction to Union Deposit Road Project (constructed), Eisenhower Interchange Project (in final design), and Eisenhower Interchange to the west shore of the Susquehanna River Project (Eisenhower Interchange to Cameron Street in final design), as well as improvements on the west shore of the Susquehanna River through the I-83/Pennsylvania Route (PA) 581 split. The *I-83 Master Plan* also identified the future need to address both congestion and condition issues on the South Bridge. At the time of the *I-83 Master Plan* it was assumed that the substructure (piers) of the South Bridge could be widened and the superstructure (bridge deck and parapets) replaced.

### 1.1.2 Greater Harrisburg Area Susquehanna River Bridges Master Plan

In 2019 and 2020, PennDOT conducted the *Greater Harrisburg Area Susquehanna River Bridges Master Plan*[8] (short title: *River Bridges Master Plan*) to prioritize bridge improvements across the Susquehanna River. During the study, it was determined that the South Bridge was approaching the end of its serviceable lifespan more quickly than originally anticipated. The serviceable lifespan of a bridge refers to the ability to fix the structure with repairs versus needing to replace the structure entirely. When a bridge reaches the point in its age and use that it requires frequent, costly repairs that will regularly shut down all or part of the bridge to traffic, it has reached the end of its serviceable lifespan.

Comparing the traffic analysis conducted for the *I-83 Master Plan* to the analysis conducted for the *River Bridges Master Plan* showed traffic has increased more quickly than was originally predicted. These higher traffic volumes caused greater wear and tear on the bridge, contributing to the bridge reaching the end of its serviceable lifespan more quickly. For the reasons identified in the *River Bridges Master Plan* analysis, full replacement of the South Bridge is now proposed.

[7] https://www.i-83beltway.com/projects/i-83-master-plan.php
[8] http://www.hbgriverbridges.com/

### 1.1.3 Alternative Funding Planning and Environmental Linkages Study

In fall of 2020, PennDOT began a statewide Planning and Environmental Linkages (PEL) study to identify potential funding options to fill an $8.1 billion (and growing) funding gap for maintaining and improving the State's highways and bridges. The *Alternative Funding PEL Study* identified near-term and long-term potential funding solutions that could be implemented. Tolling major bridges and using the toll money to cover the costs of rehabilitating or replacing and maintaining the bridge over a period of time was identified as a near-term solution that could be implemented relatively quickly. In February 2021, PennDOT identified nine candidate bridges for tolling, one of which was the Interstate 83 (I-83) South Bridge project.

Upon identification as a candidate bridge, the effects of tolling the I-83 South Bridge were evaluated, including: effects on low-income persons using the bridges, effects associated with constructing toll equipment, and effects associated with people choosing to divert onto local roadways to avoid paying the toll. A low-income program was adopted to off-set effects on low-income persons and improvements along diversion routes were incorporated into the project to off-set the effects on local roadways. Thirty intersections were studied along the potential diversion routes and improvements to offset adverse effects were identified at certain intersections. At other intersections, it was determined that the improvements to mitigate the increased traffic were not reasonable due to geometric constraints or development abutting roadways and intersections. Some of the improvements were covered by separate independent projects already programmed; however, the following improvements were included as part of the South Bridge project:

- Signal improvements – Market Street in Lemoyne (west shore)
- Signal timing optimization – Forster Street at Front and 2nd Streets (east shore); series of intersection on the west shore
- Rectangular Rapid Flashing Beacon - South 3rd Street/Herman Street at existing crosswalk (west shore)
- Improved pavement striping and signing – North 7th Street/Walnut Street (west shore)

An EA comparing the effects of the No Build Alternative and the Build Alternative with bridge tolling was prepared and was made available for official public review and comment on May 10, 2022. Public Hearings were scheduled for May 25 and May 26, 2022.

On May 18, 2022, as a result of a lawsuit, the court issued an injunction and all work related to the South Bridge project was halted; the public hearings were not held. Subsequent enactment of Act 84 of 2022 amended the P3 law and revoked PennDOT's ability to implement mandatory tolls to fund projects including the I-83 South Bridge project and other interstate bridge projects across the state.

As a result of the lawsuits and the subsequent enactment of Act 84 of 2022, **PennDOT is moving the I-83 South Bridge project forward, but without tolling**. As a toll will no longer be placed on the South Bridge, diversion of traffic onto local roads to avoid the toll will not occur; therefore,

diversion route improvements are no longer part of the South Bridge project. Area roadway improvement projects programmed separately on the Transportation Improvement Program would continue to move forward.

Funding for the I-83 South Bridge project will come from Interstate Transportation Improvement Program (TIP) funding, and due to the pressing need to replace this high priority bridge, may require deferral or elimination of other projects on the TIP and/or the Twelve Year Program (TYP). Where possible, PennDOT will take advantage of additional funding opportunities arising out of the federal Infrastructure Investment Jobs Act ("IIJA"), also known as the Bipartisan Infrastructure Law ("BIL"). Use of IIJA (BIL) funding would allow PennDOT to move the South Bridge project forward with less effect on the timing and/or implementation of other needed maintenance and improvement projects.

**This EA documents and compares the effects associated with the No Build Alternative and the Build Alternative without tolling**. Effects associated with constructing tolling equipment, improving diversion routes, and paying tolls have been removed from the document.

The comments received during the original EA comment period (May 10 to June 9, 2022), have been reviewed and considered. The majority of comments received during the EA comment period were related to tolling and diversion of traffic, and are no longer applicable to the project since tolling is no longer being implemented. Comments received on the EA relevant to the project without tolling were considered and additional information incorporated into the respective sections within this document as appropriate.

### 1.1.4 Logical Termini and Independent Utility

In accordance with FHWA's implementing regulations for NEPA, 23 Code of Federal Regulations (CFR) 771.111(f), any action evaluated under NEPA as a categorical exclusion, EA, or environmental impact statement (EIS) must:

1. Connect logical termini and be of sufficient length to address environmental matters on a broad scope;
2. Have independent utility or independent significance (i.e., be usable and a reasonable expenditure even if no additional transportation improvements in the area are made); and
3. Not restrict consideration of alternatives for other reasonably foreseeable transportation improvements.

In assessing logical termini and independent utility for an existing interstate roadway, it is rational to look at interchanges along the roadway as logical points to stop and start a project. **Figure 1-2** shows the current logical termini for the separate, independent projects along the I-83 corridor through Harrisburg.

The eastern terminus of the I-83 South Bridge Project is the Front Street/2nd Street interchange, which includes the viaduct from the eastern end of the South Bridge to Cameron Street. This is also the western terminus of the East Shore Section 3 (ESS3) Project. The viaduct and the

interchange would be reconstructed as part of the I-83 South Bridge Project[9], including adding a second lane to the 2nd Street ramp exiting the South Bridge structure and heading north into downtown Harrisburg.

The western terminus of the I-83 South Bridge Project is immediately east of the I-83/PA-581 interchange. No improvements to the I-83/PA-581 interchange are included in the I-83 South Bridge Project; a separate project to improve this interchange may be planned in the future.

**Figure 1-2. Independent Projects in the I-83 Corridor**




The proposed I-83 South Bridge Project would provide congestion relief and safety enhancements without requiring improvements to the adjacent highway sections of I-83. The design concept as proposed will not constrain the development of alternatives for improving traffic operations in the I-83 corridor. The end points would abut the reconstructed (or existing) ESS3 mainline and ramps. The I-83 South Bridge Project could be constructed before or after ESS3; both projects would still maintain independent utility and traffic function.

[9] While previously included in the ESS3 Project, PennDOT has elected to incorporate the viaduct bridge from the eastern end of the South Bridge to Cameron Street into the I-83 South Bridge Project to facilitate construction, reduce costs, maximize efficiency, minimize construction duration, and minimize effects on traffic and other resources during construction. Environmental fieldwork and analysis have been completed to a commensurate level for the entire study area.

## 1.2 Project Area

The study area for the I-83 South Bridge Project spans both Dauphin and Cumberland Counties. The South Bridge connects Harrisburg to its neighboring communities to the west in Cumberland County over the Susquehanna River (see **Figure 1-1**). The project area is heavily urbanized and includes residential housing as well as commercial and industrial land uses. The Norfolk Southern Railway passes under the western end of the bridge. On the east shore, Norfolk Southern and Amtrak rail lines pass under the Front Street/2nd Street interchange and East Shore Viaduct. Capital Area Transit (CAT) routes, stops, and facilities are located throughout the project area; Rabbittransit also has routes that use I-83 and the South Bridge. The Lemoyne Borough wastewater treatment facility is located to the north of I-83 at the west shore of the Susquehanna River. The Front Street sewage pumping station is located at the eastern end of the bridge, on the northern side of I-83. The Capital Area Greenbelt (Greenbelt) Trail parallels the east shore of the river and traverses under the South Bridge. The Dock Street Dam is located just north of the bridge, and several small river islands are located south of the bridge. Several other bridges—the Market Street Bridge, Harvey Taylor Bridge, I-81 George N. Wade Bridge, and the I-76 Turnpike Bridge—provide connections across the Susquehanna River in the area. The Market Street and Harvey Taylor Bridges provide mobility for bicyclists and pedestrians between the east and west shores in downtown Harrisburg.

The project's western terminus starts just east of the I-83/PA-581 split and encompasses a proposed reconstruction of the Lemoyne interchange on the west shore. The proposed project includes a replacement, widening, and lengthening of the S. 3rd Street Bridge in Lemoyne; reconstruction of the Lemoyne interchange; widening of the South Bridge over the Susquehanna River; and reconstruction of the viaduct from the river to Cameron Street, including the Front Street/2nd Street interchange. The eastern project terminus is at Cameron Street (the eastern end of the viaduct supporting the I-83 mainline on the east shore, which bridges over the Norfolk Southern and Amtrak rail lines, Cameron Street [SR-230], and Paxton Creek)[10]. The study area includes the directly affected area (**Figure 1-1**), which encompasses the footprint of the proposed project and associated right-of-way (ROW). Where project impacts discussed in **Chapter 3** are likely to occur outside this study area, this document provides clarifying descriptions and mapping of the potentially impacted areas.

[10] A separate independent PennDOT project has obtained a NEPA decision on the east shore. That project, called East Shore Section 3 (ESS3), was evaluated in a previously approved documented Categorical Exclusion that included the Front Street/2nd Street interchange on the Susquehanna River's east shore. In order to facilitate construction, reduce costs, maximize efficiency, minimize construction duration, and minimize effects on traffic and other resources during construction, PennDOT elected to move the eastern terminus for the I-83 South Bridge Project to Cameron Street to encompass the viaduct that goes over the Norfolk Southern Railroad, Amtrak, and Paxton Creek and to encompass the entire Front Street/2nd Street interchange. Environmental analysis from the previously approved ESS3 Categorical Exclusion has been incorporated herein and updated where appropriate. An EA was subsequently prepared for the ESS3 project, and a FONSI was issued on March 2, 2023; the EA did not include the Front Street/2nd Street interchange or the viaduct.

# 1.3 Purpose and Needs

NEPA requires a description of a project's purpose (the goal it is meant to accomplish), and the need for the project (the problem or problems the project intends to solve). More details on the purpose of this project and its needs are documented in the *Evaluation of Purpose and Need, SR 0083 South Bridge, Dauphin County* memo (July 2020; finalized January 2021). The purpose and needs for the project are described as follows.

## 1.3.1 Project Purpose

The existing I-83 corridor was designed and constructed more than 50 years ago. Consequently, many of the design elements, including number of lanes, ramp radii, weave distances, and lengths of acceleration/deceleration lanes were structured for conditions, including lower traffic volumes and speeds, that no longer exist today. Additionally, the physical condition of the pavement and structures has deteriorated over time and needs to be addressed to maintain roadway functionality. The purpose of the project is to improve traffic flow and safety on I-83 across the South Bridge and associated interchanges on the east and west shores.

**Project Purpose**

The project purpose is to improve traffic flow and safety on I-83 across the South Bridge and associated interchanges on the east and west shores, which is consistent with the overarching goal of the *I-83 Master Plan* to improve traffic flow and safety around the City of Harrisburg by providing upgraded transportation facilities.

## 1.3.2 Project Needs

The project team reviewed and analyzed the needs presented in the *I-83 Master Plan* using updated data to confirm present-day applicability for the study area.

**Project Need 1**

*The existing John Harris Memorial Bridge (I-83 South Bridge) consists of a fracture critical two-girder superstructure that is approaching the end of its fatigue life. Similarly, the viaduct bridge on the east shore (East Shore Viaduct), which spans the Norfolk Southern Railroad, Amtrak, Cameron Street (SR 230), and Paxton Creek is also approaching the end of its serviceable life. Inspections and maintenance of the bridge will continue to increase in frequency and magnitude, creating substantial and unpredictable impacts to traffic movement in the Harrisburg area with more frequent lane closures and potentially a permanent closure of the bridge. The cost to continually inspect for and mitigate new fatigue cracks is substantial.*

The current Bridge Management System inspection condition ratings (2023) indicate an overall rating of poor for the South Bridge, with the superstructure rating also poor. Recent inspection reports indicate cracks and signs of deterioration in the main steel girders, floor beams, and stringers.

The East Shore Viaduct has an overall physical condition rated as fair (Specialty Engineering, Inc. 2022). The condition of the viaduct is controlled by the substructure, which has areas of cracking and spalling on the columns and caps. The majority of the superstructure defects are related to the

numerous cracked welds at the diaphragm and girder connections that have propagated into the girder webs.

Standard inspection frequency for bridge structures is 24 months. The South Bridge, in poor condition, is currently on a 6-month inspection schedule. The existing structure type of the South Bridge, fatigue details, and increasing frequency of inspection further underline the urgency to replace this bridge.

An analysis based on average daily truck traffic (ADTT) volumes was conducted for the South Bridge in 1991. The results of that analysis indicated the bridge would reach the end of its serviceable life in approximately 2035. The remaining service life analysis was updated in 2019, during the *River Bridges Master Plan,* using current and projected ADTT volumes. The results of the analysis indicated the bridge will approach the end of its serviceable life sooner than 2035.

Since the bridge already has numerous cracks and the probability of additional cracks will continue to increase, PennDOT will need to access the bridge more frequently for inspections and to repair cracks, resulting in more frequent traffic disruptions from the increased inspections and closures for repairs. The inspection frequency for the bridge has already been increased to a 6-month interval, and superloads and permit loads are not permitted on the bridge. Over the past several years, one direction of the bridge was closed for 1-2 days on several occasions for emergency repairs. This trend is anticipated to continue into the future.

### Project Need 2

*The existing pavement for the majority of the project corridor is over 50 years old (specifically I-83) and has reached the end of its serviceable life span.*

The current pavement overlays cover the original pavement constructed in the 1960s. Even with proper maintenance, pavement reaches a point at which milling and resurfacing is no longer sufficient, and total reconstruction is warranted. Pavement in the I-83 corridor through Harrisburg has reached this point.

### Project Need 3

*The existing roadway configuration will not accommodate existing traffic volumes and will fail system-wide with future traffic volumes.*

Existing traffic conditions, future-year travel demand forecasts, and traffic operational analyses were updated in 2016[11] from the older master plan estimates to verify the traffic congestion need for the I-83 corridor project area was still valid. That analysis confirmed the validity of the traffic congestion need for the I-83 South Bridge Project (*Conceptual Point of Access Study for I-83 Lemoyne Interchange Ramp Modifications*, June 2023). The report indicated that 2016 average daily traffic for the South Bridge was approximately 125,000 vehicles and that by 2050, travel

[11] 2016 data was used because it was the best available pre-COVID-19 pandemic data and is assumed to be representative of post-pandemic traffic.

demand would exceed the existing available roadway capacity of the South Bridge during the morning and afternoon peak hours.

Based on the traffic modeling completed for the existing roadway condition and the future 2050 traffic volumes, the Highway Capacity Manual level-of-service (LOS) for three or four lanes per direction (current roadway configuration) is LOS F which is the worst level of service computable and one that does not meet nationally accepted guidance of a minimum LOS D for urban facilities during the peak hours.

**What is Level of Service?**

Level of Service (LOS) is a term used to qualitatively describe the operating conditions of a roadway based on factors such as speed, travel time, maneuverability, delay and safety. The six levels are designated "A" through "F". "A" represents the best conditions (free-flow), while "F" is the worst possible conditions (congested).

The anticipated traffic growth on I-83 stems from both local Cumberland and Dauphin Counties general growth in addition to regional growth. The forecasted future volumes were developed using the Tri-County Regional Planning Commission's travel demand model supplemented with updated traffic counts and growth patterns.

To confirm the validity of the original volumes, **Table 1-1** compares the 2016 traffic volumes used for the modeling to current available volumes from PennDOT's Roadway Management System (RMS) and PennDOT's Traffic Inventory Repository (TIRe)[12].

**Table 1-1. Comparison of 2016 and Current RMS/TIRe Traffic Volumes**

| Location | 2016 Volumes | Current RMS/TIRe Volumes (year) |
|---|---|---|
| I-83 between PA 581 and South Bridge (both directions) | 101,615 | 85,221 (2023) |
| 3rd Street, 1500' east of Lowther (both directions) | 14,539 | 12,732 (2023) |
| Ramp – I-83 SB to Lemoyne | 10,257 | 9,249 (2021) |
| Ramp – Lemoyne to I-83 NB | 9,514 | 7,777 (2021) |
| Front Street/2nd Street ramp system (total all ramps) | 42,081 | 41,290 (2021) |

As the table shows, traffic volumes have not quite returned to pre-COVID levels. Updating current volumes would not substantially change the modelled 2050 volumes, which are based on overall regional growth and traffic patterns. Therefore, the results of the 2016 traffic analysis are still valid using the modelled 2050 traffic volumes. Based on recent trends and research, traffic volumes are expected to return to pre-COVID levels, and therefore, the modeling previously completed is relevant.[13]

[12] Additional traffic volume data for I-83 on the east shore was not available.

[13] https://tripnet.org/reports/news-release-as-u-s-vehicle-rebounds-to-near-pre-pandemic-levels-15-states-have-exceed-pre-covid-levels/ - states: "While future transportation trends in a post-COVID-19 world will likely take several years to fully emerge, we already see that vehicle travel is almost back to pre-pandemic levels – it is already higher in 15 states," said Dave Kearby, TRIP's executive director. "Meeting the nation's post-COVID-19 mobility needs will require that increased federal and state transportation funding provide state and local governments the flexibility to determine how best to improve their transportation system."

An examination of 2018 travel time records provided by data analysis firm, Inrix, found that there are very slow travel speeds in the project area during the peak morning and afternoon commuting hours, which are indicative of heavily congested travel conditions. Average speeds for northbound travel were 32 miles per hour (mph) during the morning peak hour and 23 mph during the evening peak hour; average speeds for southbound travel were 46 mph during the morning peak hour and 26 mph during the evening peak hour. The speed limit is 55 mph, meaning during morning and evening commutes the speeds in the primary direction of travel are approximately 50 to 60 percent slower than the speed at which the highway is intended to function.

Traffic modeling conducted in 2021 continued to identify growing demand and worsening traffic conditions if no improvements are made. The analysis predicted that 2040 average weekday traffic[14] on the South Bridge, without any improvements, will be 167,779 vehicles by 2040. The modeling predicts that in 2040, average speeds for northbound travel will drop to 24 mph during the morning peak hour and 11 mph for southbound travel during the evening peak hour.

### Project Need 4

*The existing roadway system features design elements from 50 years ago, which do not afford the safety characteristics of modern roadway design for high-speed, high-volume facilities. As a consequence, there are operational safety concerns with the existing mainline and interchange configurations.*

The existing roadway system features, including number of lanes, shoulder widths, ramp radii, weave distances, and lengths of acceleration/deceleration lanes, create safety concerns and ultimately influence congestion in the project area.

The improvements implemented within the project area since publication of the *I-83 Master Plan* have consisted of restriping northbound I-83 across the John Harris Memorial Bridge (I-83 South Bridge) from three to four lanes, eliminating the outside shoulder on the bridge and various resurfacing projects.

The crash history from January 1, 2012, to December 31, 2016, evaluated for the ESS3 Project[15] extended far enough that it included the South Bridge. The calculated crash rates were compared to the *Homogenous Report for State Road Crashes in Years 2012 to 2016*. The data was also compared to findings stated in the *Analysis of Transportation Needs for the I-83 Master Plan* document. Notable findings from this comparison are as follows:

- As stated in the *I-83 Master Plan*, crashes that occur on the I-83 mainline are spread out through the study area, with noticeable concentrations at the interchanges in both northbound and southbound directions. The updated crash data confirms this statement.
- The original document states that three out of eight I-83 roadway segments experience crash rates greater than 50 percent more than the statewide average for full access control,

[14] Average daily traffic is an average of all days (Saturdays and Sundays included). Average weekday traffic excludes weekends and tends to be higher due to more work trips.
[15] The ESS3 Project's crash analysis included the South Bridge area.

divided highways in an urban setting. The updated crash data reveals that I-83 segments experience crash rates greater than 50 percent more than the statewide average.

- The Front Street/2nd Street interchange has a crash rate greater than 50 percent above the statewide average.

To further evaluate the safety need, the estimated number of expected crashes along I-83 from the junction of PA-581 to the eastern side of the Front Street/2nd Street interchange was predicted using the Highway Safety Manual's (HSM) Enhanced Interchange Safety Analysis Tool calibrated to Pennsylvania conditions. This tool predicts the expected number of crashes along an existing facility using geometric and traffic volume characteristics. For this project, the time period of 2015–2019 was used to avoid anomalies due to the COVID-19 pandemic. The HSM model predicts that a total of 276 crashes would normally occur on a freeway with similar geometric and traffic volume characteristics. In this same time period, I-83 in this area had 318 reported crashes, which is approximately 15 percent higher than predicted.

The evaluation of the 2012 to 2016 crash history and the HSM analysis for the project area confirm Project Need 4 is applicable for the project.

### Project Need 5

*The existing regional and local roadway network on the west shore impedes mobility for pedestrians and bicyclists to safely access adjacent communities, businesses, and places of employment within the project corridor severed by the railroad and I-83.*

On the west shore, SR 2035 (Bridge Street/S. 3rd Street) is currently the only north-south crossing over I-83 in the project area. The connection between the northern and southern communities was severed by the railroad and the construction of I-83. The crossing, which has substandard shoulders, is used by motorists, pedestrians, and bicyclists. SR 2035 is also part of Statewide Bike Route J.

# 2.0 Alternatives

## 2.1 Proposed Action

### 2.1.1 Proposed South Bridge Alternative

**Supporting documentation for Chapter 2 includes:**

- *I-83 South Bridge, Technical Memo for the Dismissal of Rehabilitation Alternative* (February 2021)
- *South Bridge Design Plans* (August 2023); see **Appendix A**
- *Alternative Analysis for I-83 John Harris Memorial Bridge Replacement* (September 2020; revised March 2022)
- *Technical Memo for the Dismissal of Pedestrian/Bike Accommodations on the I-83 South Bridge* (October 2023)

The proposed I-83 South Bridge Project would connect into the proposed widening and reconfiguration associated with the ESS3 Project on the east shore of the Susquehanna River at Cameron Street. As depicted on **Figure 2-1**, the I-83 South Bridge Project would consist of: (1) replacing the existing South Bridge with a wider bridge, widened to the south; (2) reconfiguring the Lemoyne interchange on the west shore, including replacing the S. 3rd Street Bridge over I-83 and the Norfolk Southern Railroad with a wider and longer structure; and (3) replacing the viaduct (bridge) from the Susquehanna River to Cameron Street and reconstructing the Front Street/2nd Street interchange on the east shore. Structures are shown in green and roadway is shown in orange. The South Bridge ends at the east shore riverbank where the viaduct then continues to Cameron Street.

**South Bridge Replacement.** Presently, the dual, two-girder South Bridge carries four northbound and three southbound lanes and is 52 feet wide in each direction. Based on traffic analysis completed in the corridor[16], the proposed future South Bridge would need five lanes in each direction, with full inside and outside shoulders to accommodate traffic forecasts, meet design criteria, and improve safety. The proposed 5-lane per direction alternative is forecast to operate at LOS D in 2050. The two outer northbound lanes would turn into two exit lanes for 2nd Street, while one outer southbound lane would turn into an exit lane for Lemoyne. **Figure 2-2** and **Figure 2-3** show the current and proposed bridge cross-sections, respectively. While the final design plans are not complete, **Figure 2-4** depicts a sample rendering of what the new South Bridge might look like.

In examining the best means of replacing the South Bridge, several constraints were considered (**Figure 2-1**). The proximity of the Dock Street Dam immediately north of the South Bridge was a major factor in deciding to replace the northbound lanes south of the existing bridge to avoid affecting the dam**.** The historic Shipoke neighborhood and the Front Street Sewage Pumping Station also contributed to this decision, as does the ability to maintain traffic during construction.

In developing the design for the South Bridge project, consideration was given to including bicycle and pedestrian accommodations on the South Bridge structure; however, due to several factors

[16] *I-83 East Shore Section 3 Traffic Alternative Analysis Report,* dated December 2018. Note that while completed for the ESS3 Project, the traffic forecast is valid for the South Bridge, which is immediately west of that project.

such as location and travel distances, construction and maintenance costs, long-term maintenance concerns, and other parallel route options for pedestrians and bicyclists, it was determined that including bicycle/pedestrian accommodations on the I-83 bridge would not represent a reasonable expenditure of public funds. It should be noted that investment is being made to widen the S. 3rd Street Bridge in Lemoyne to accommodate bicycle and pedestrian facilities as part of the South Bridge project, and investment is being made in improvements to the Lemoyne bottleneck and the existing bicycle/pedestrian facilities on the Market Street Bridge as part of separate independent transportation projects. S. 3rd Street and Market Street are part of designated Bike Route J in the Harrisburg region. Additional details regarding the assessment of bicycle/pedestrian accommodations on the South Bridge are included in the *Technical Memo for the Dismissal of Pedestrian/Bike Accommodations on the I-83 South Bridge* (September 2023).

**East Shore Viaduct Replacement.** The East Shore Viaduct was built in 1960 and widened in 1982. It is 1,930 feet long, 132 feet wide, and is composed of 21 spans built from steel I-beams. Currently, the viaduct carries three through lanes of I-83 traffic northbound and three through lanes southbound, bridging over the Norfolk Southern and Amtrak rail lines, Cameron Street (SR-230), Paxton Creek, and Front Street. One additional outside auxiliary lane in each direction on the viaduct facilitates merging on and off the I-83 mainline between ramps for the Front Street/2nd Street interchange and the Cameron Street interchange. The viaduct is part of the Front Street/2nd Street interchange.

The viaduct would be replaced with a 214-foot-wide bridge that accommodates three mainline through lanes, a two-lane Collector-Distributer (CD) road, and an auxiliary merge lane between interchanges in each direction (northbound and southbound). The CD Road, separated by a concrete median barrier from mainline through traffic, would provide access for local traffic to the Front Street/2nd Street Interchange and Cameron Street Interchange. The CD Road would continue to extend outside of the Project limits and provide local access to the 17th Street and 19th Street interchange.[17] The proposed project would widen the mainline alignment along the southern right-of-way limits to align with the southern expansion of the South Bridge. The existing northern right-of-way limits would not change. **Figure 2-5** and **Figure 2-6** show the current and proposed viaduct bridge cross-sections, respectively.

**Lemoyne Interchange and S. 3rd Street Bridge.** Due to widening of the South Bridge over the Susquehanna River, modifications to the I-83 Lemoyne interchange west of the river (west shore) would be needed. **Figure 2-1** depicts the proposed ramp configurations to accommodate widening I-83 to the south, which include:

- Replacing the S. 3rd Street Bridge over I-83 and Norfolk Southern Railroad, since the existing bridge is not long enough to accommodate the widening of I-83 underneath it

[17] Note that the portion of the collector-distributor road from the Cameron Street interchange to the 19th Street Interchange was previously evaluated and approved in the ESS3 EA (November 2022), a separate project with logical termini.

- Relocating the terminus of the I-83 southbound Lemoyne (Exit 41B) exit ramp from its current location at the S. 3rd/Lowther Street intersection to a new location on S. 3rd Street, north of the I-83 mainline (crossing over the Norfolk Southern Railroad)
- Relocating the I-83 northbound entrance ramp to the existing signalized Lowther Street/Maple Street intersection (same location the ramp was in prior to the interim 2013 improvements)
- Realigning Lowther Street east of S. 3rd Street (Bridge Street)

The project design team developed the reconfiguration of the Lemoyne interchange to maintain access to the Lemoyne community while minimizing impacts to residences, businesses, recreational areas, and other environmental features in the project area. Effects on the community are described in detail in **Chapter 3**.

The existing S. 3rd Street Bridge includes one northbound travel lane, two southbound travel lanes, narrow shoulders, and a separated sidewalk on the western side as shown in **Figure 2-7**. Bicyclists must either travel on the roadway or share the separated sidewalk with pedestrians. The S. 3rd Street Bridge provides a pedestrian and bicycle connection between the neighborhoods on either side of the Norfolk Southern Railroad and I-83. The next nearest pedestrian and bicycle crossing of I-83 is the S. 10th Street underpass, approximately 0.7 mile southwest of the S. 3rd Street Bridge. The main route of Pennsylvania Bike Route J crosses the S. 3rd Street Bridge. As shown on **Figure 2-8**, the proposed S. 3rd Street Bridge would include two northbound and two southbound travel lanes, and 5-foot shoulders and 5-foot sidewalks on both sides of the new bridge improving connectivity between neighborhoods and safety on Bike Route J for pedestrians and bicyclists.

**Front Street/2nd Street Interchange.** The existing one-lane, northbound off ramp to 2nd Street would be shifted to the south and reconstructed as a new two-lane ramp. The remaining northbound and southbound ramps would also be reconstructed, but will remain one lane. **Figure 2-1** shows the proposed South Bridge configuration with the Front Street/2nd Street interchange.

**Figure 2-1. Project Overview**

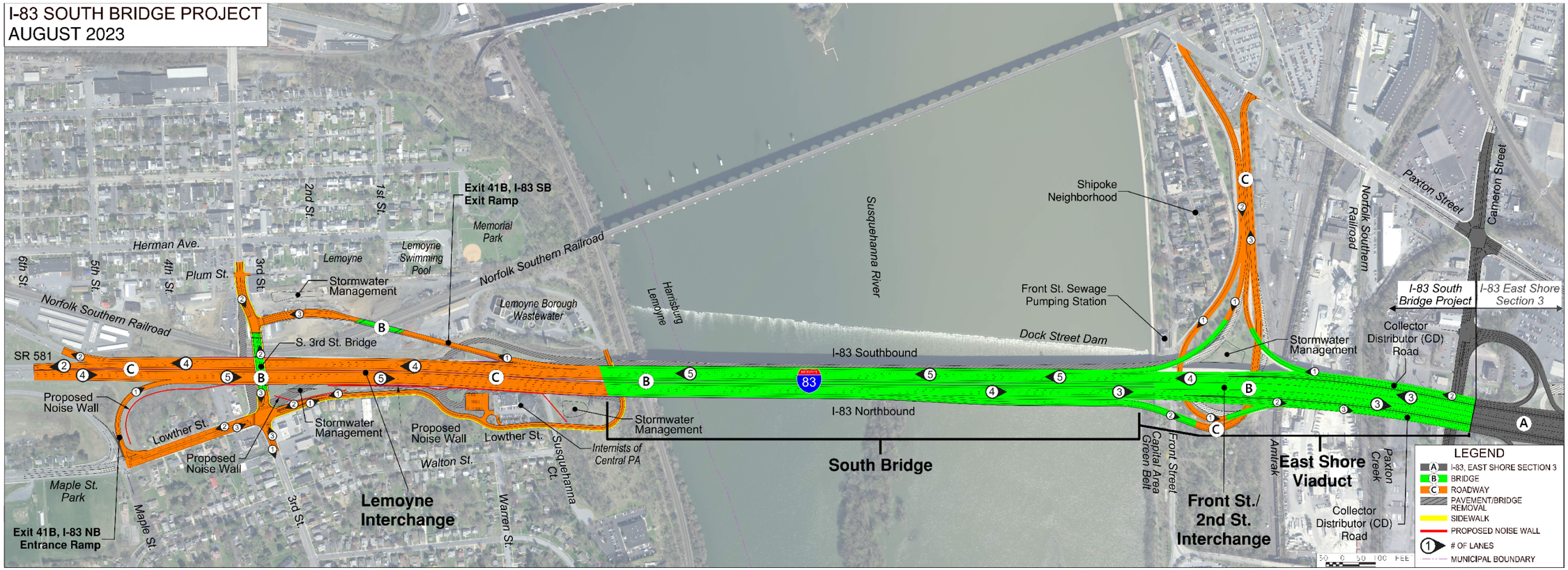


The South Bridge would be replaced with a wider structure and includes a reconfigured Lemoyne interchange on the west shore and a reconstructed Front Street /2nd Street interchange on the east shore.

**Figure 2-2. Current South Bridge Cross-section**

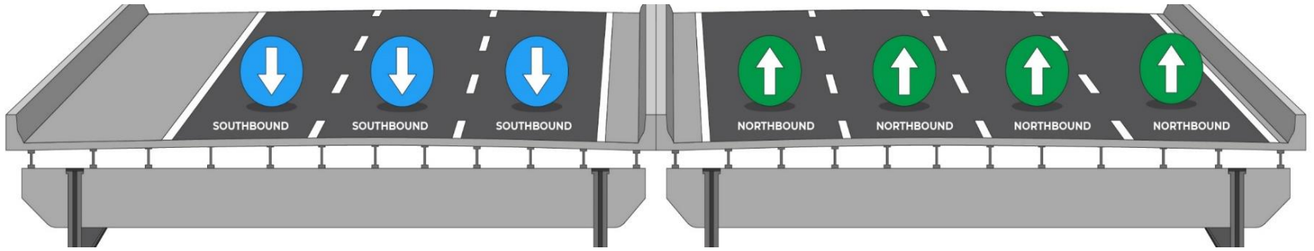


The current South Bridge has four northbound lanes and three southbound lanes, and is 52 feet wide in each direction. The outer northbound lane turns into the exit ramp for 2nd Street.

**Figure 2-3. Proposed South Bridge Cross-section**

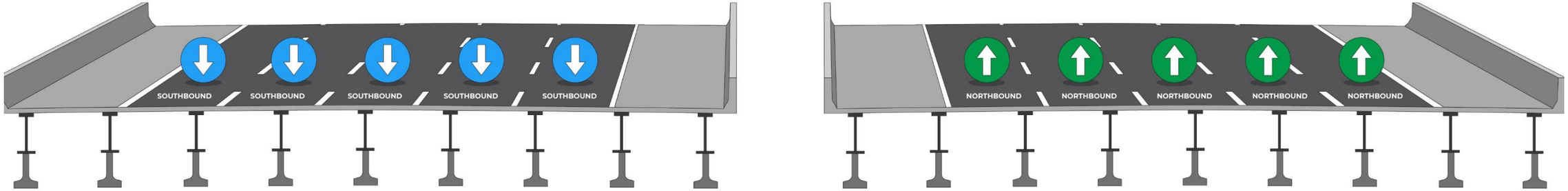


The proposed South Bridge would be widened to five lanes and full shoulders (84 feet wide) in each direction on two independent structures. The two outer northbound and one outer southbound lanes turn into exit lanes for 2nd Street and Lemoyne, respectively.

**Figure 2-4. Potential Bridge Rendering, Looking Northeast**



This rendering of what the potential replacement South Bridge could look like is based on a multi-girder bridge design. The exact bridge type will be selected during final design.

**Figure 2-5. Current Viaduct Bridge Cross-section**

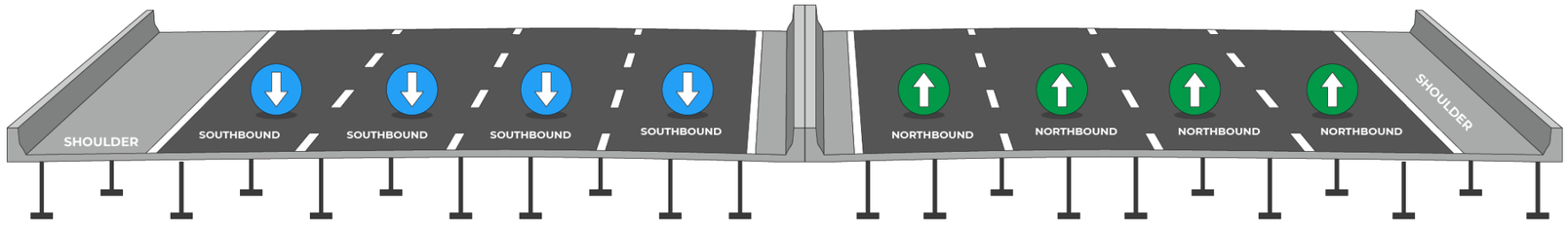


The current viaduct has three through-lanes in each direction. The outside lanes are merge lanes that facilitate merging on and off the I-83 mainline between ramps. There are no inside shoulders.

**Figure 2-6. Proposed Viaduct Bridge Cross-section**

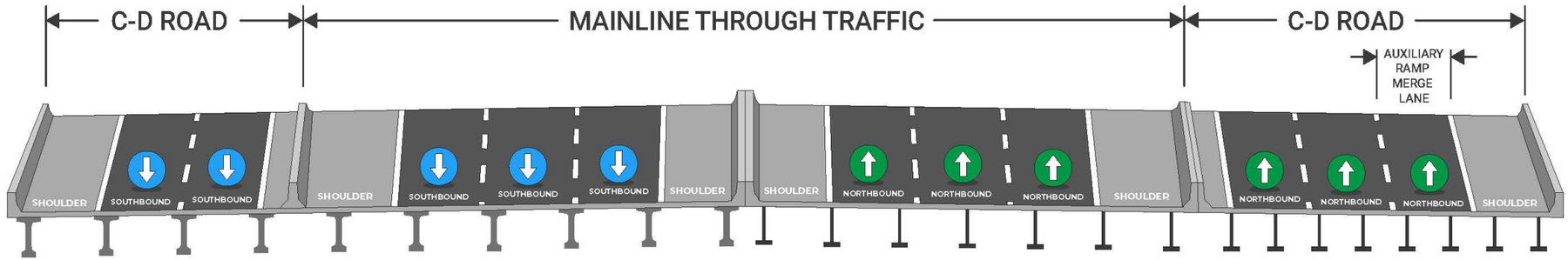


The proposed viaduct would continue to have three through-lanes on I-83 in each direction. Full shoulders on the inside and outside of the I-83 mainline lanes will improve safety and mobility during incidents. The outside lanes function as a collector-distributor roadway system (similar to a frontage road) to facilitate local traffic movements and merging on and off the mainline. The collector-distributor roadways would be two lanes in each direction. In between ramps, a merge lane would also be provided.

**Figure 2-7. Existing S. 3rd Street Bridge in Lemoyne**

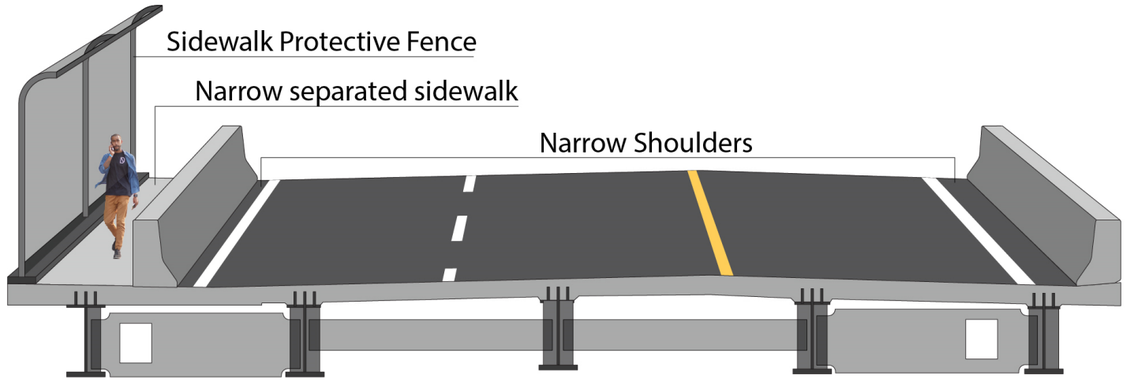


**Figure 2-8. Proposed S. 3rd Street Bridge Configuration**

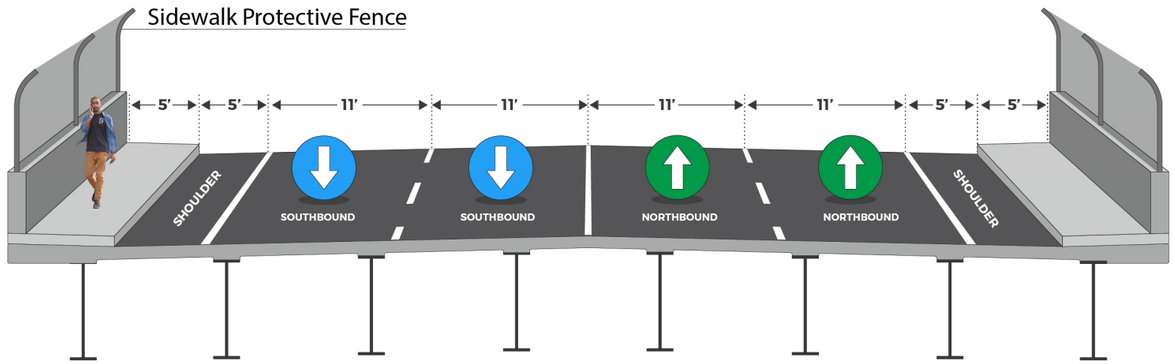

## 2.1.2 Construction

**South Bridge.** To minimize traffic disruption, construction is planned to allow the greatest number of lanes to be maintained throughout the construction period (estimated to last approximately 6 to 8 years). The proposed construction staging is shown in **Figure 2-9** through **Figure 2-11**.

**Figure 2-9. Current I-83 South Bridge**

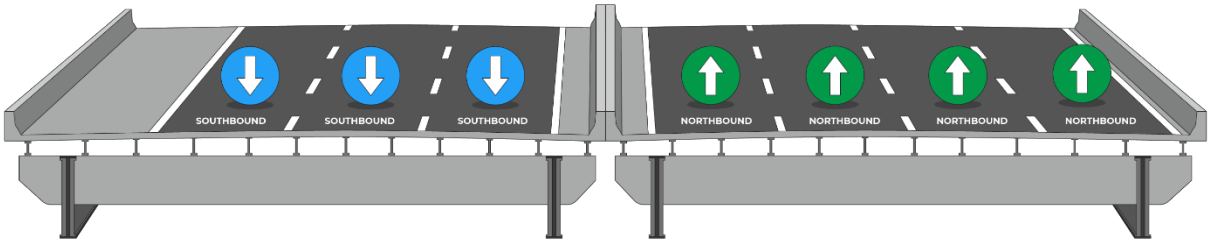


This is the existing I-83 South Bridge.

**Figure 2-10. I-83 South Bridge during Construction**

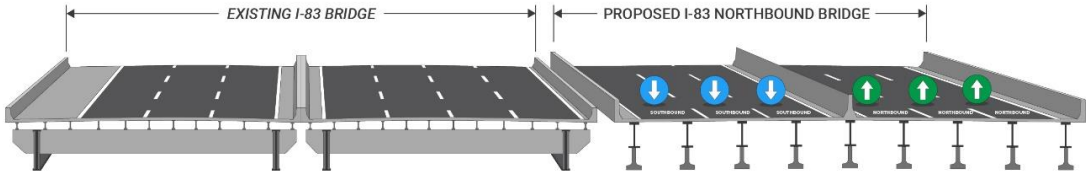


New northbound lanes would be built first (structure on right in figure), south of the existing structure (shown on the left in figure). Once complete, all traffic would be routed to these new lanes as shown in the figure (blue and green arrows on structure on right). (Note: For most of the southbound bridge construction time period three lanes would be open in each direction; however, there would be stages when traffic may be restricted to two lanes in one or both directions. A minimum of two lanes in each direction would be open at any given time.) The existing bridge would then be demolished, and new southbound lanes would be built where the existing bridge was.

**Figure 2-11. I-83 South Bridge after Construction**

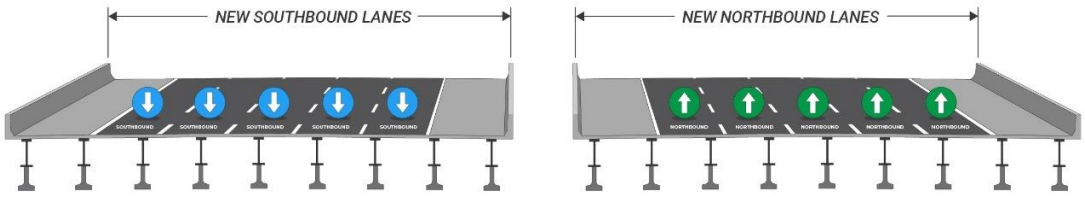


Once the new southbound lanes are complete, the new South Bridge would be finished. At this time, traffic would be redistributed to their appropriate lanes.

PennDOT looked at an array of likely construction techniques for the South Bridge, and this EA discusses the technique viewed as the best option based on preliminary design plans. To support construction of the South Bridge, a number of temporary construction bridges are anticipated to be built[18]. Much of the replacement South Bridge is anticipated to be constructed (and the old bridge removed) from temporary construction bridges (see **Figure 2-12**) that would be built along each section of permanent bridge being erected. The temporary construction bridges are anticipated to be constructed of beams and decking that are supported by caissons or piles. Four separate temporary construction bridges are proposed. Each temporary bridge would be approximately half the width of the river—two for construction of the northbound lanes and two for construction of the southbound lanes. It is anticipated that only one of the four temporary construction bridges would be in place at a given time. The temporary construction bridges and piers would be removed upon the project's completion. See **Chapter 3**, **Section 3.2.5**, Floodplains and Flood Hazard Areas, for more details regarding the temporary construction bridges.

The construction staging area for the west shore would be west of the railroad corridor in a vacant upland area. To construct and access the temporary construction bridges from the west shore, a 50- to 75-foot-wide access road is proposed to be built along the west shore (partially in the river; see **Figure 2-12**), traversing south approximately 1,400 feet, approximately 400 feet of which is in the river. Because of limited space and the railroad tracks running along the west shore of the river, a riprapped earthen work area of approximately 200,000 square feet is proposed in the river for construction vehicles to complete turning movements to access the temporary construction bridges and for constructing the first two permanent piers in the river on the west shore for the new South Bridge. The riprapped work area would extend up to 315 feet into the river at its widest point. Construction equipment would cross the Norfolk Southern tracks to get to the temporary access road from the eastern end of relocated Lowther Street. To facilitate construction, a gated and signalized railroad crossing would be installed, which would eliminate the need for a railroad flagger. The temporary access road and causeway platform would be removed upon the project's completion, and the riverbank would be restored and revegetated with native plantings.

Access to construct the temporary construction bridges from the east shore would be less complicated than that described for the west shore. There are better roadway access options, and the grade from the riverbank to the river is comparatively flat and does not involve a railroad crossing. On the east shore, there is sufficient space for construction staging that access to the work bridges can be accomplished without adding fill material in the river. Where the riverbank is disturbed it would be restored and revegetated with native plantings.

[18] Because the project would be procured through a design-build method, the selected contractor team could suggest a different construction method. The impacts described in the EA are based on the preliminary design and anticipated construction methods. If final design results in a different bridge or construction approach, environmental impacts would need to be re-evaluated.

**Figure 2-12. Example Temporary Construction Bridge (Bonner Bridge Replacement Project, HDR)**

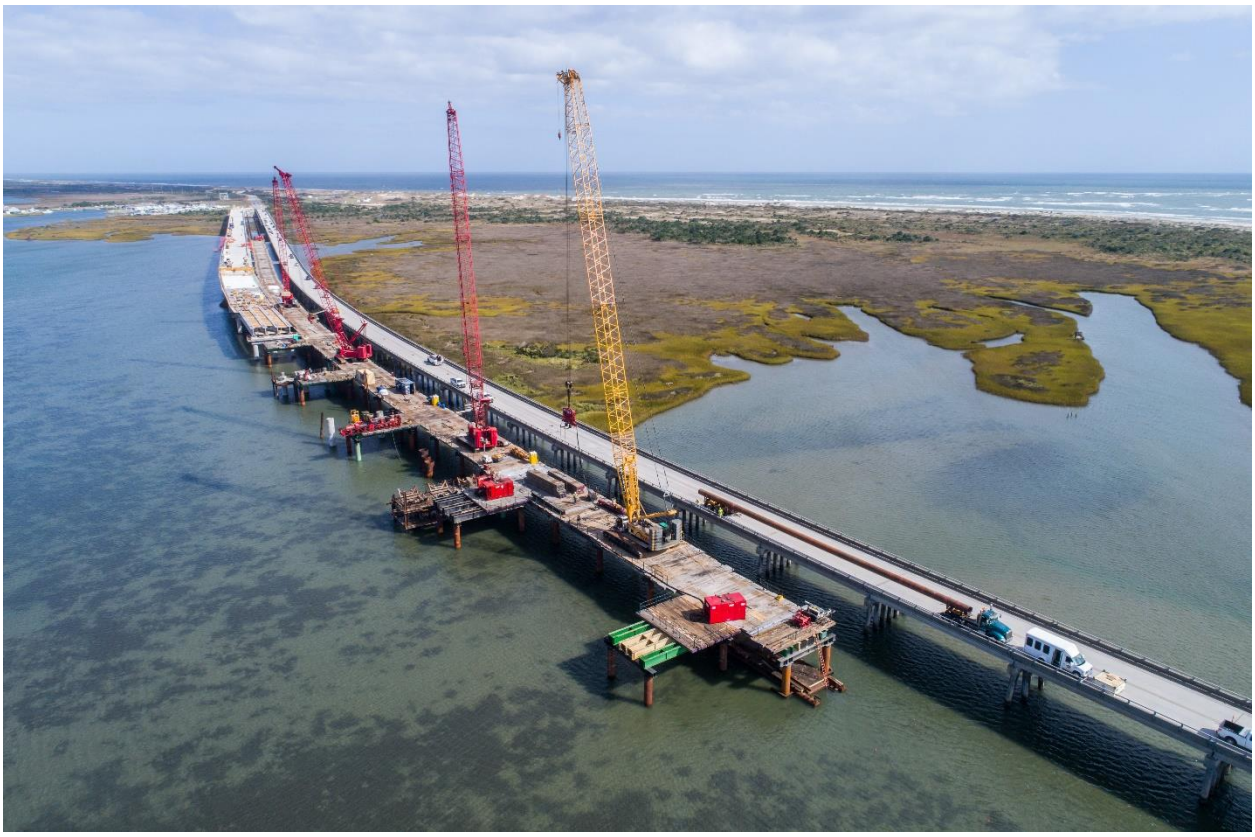

**Lemoyne Interchange.** For the Lemoyne interchange, effects on traffic during construction would also be minimized. The S. 3rd Street Bridge would be constructed off-line to the east of the existing structure so that traffic can be maintained on the existing bridge during construction. Similarly, the new southbound off ramp into Lemoyne (Ramp X) would be largely constructed while traffic is maintained on the existing ramp. Short-term detours would be required to tie the new bridge and new ramp into the existing roadway network. Lowther Street would remain open to traffic throughout construction. Much of the eastern relocation of Lowther Street can be built off-line while traffic is maintained on existing Lowther Street.

**East Shore Viaduct and Front Street/2nd Street Interchange**. The viaduct structure would be built in a similar phasing sequence as the South Bridge, with the northbound lanes being built first while maintaining traffic on the existing viaduct. Traffic would then be shifted to the northbound lanes and the existing viaduct torn down. Finally, the southbound structure would be constructed where the existing viaduct is located. Once complete, southbound traffic would be redistributed onto the newly constructed southbound structure.

**Figure 2-13. Proposed West Shore Construction Access**

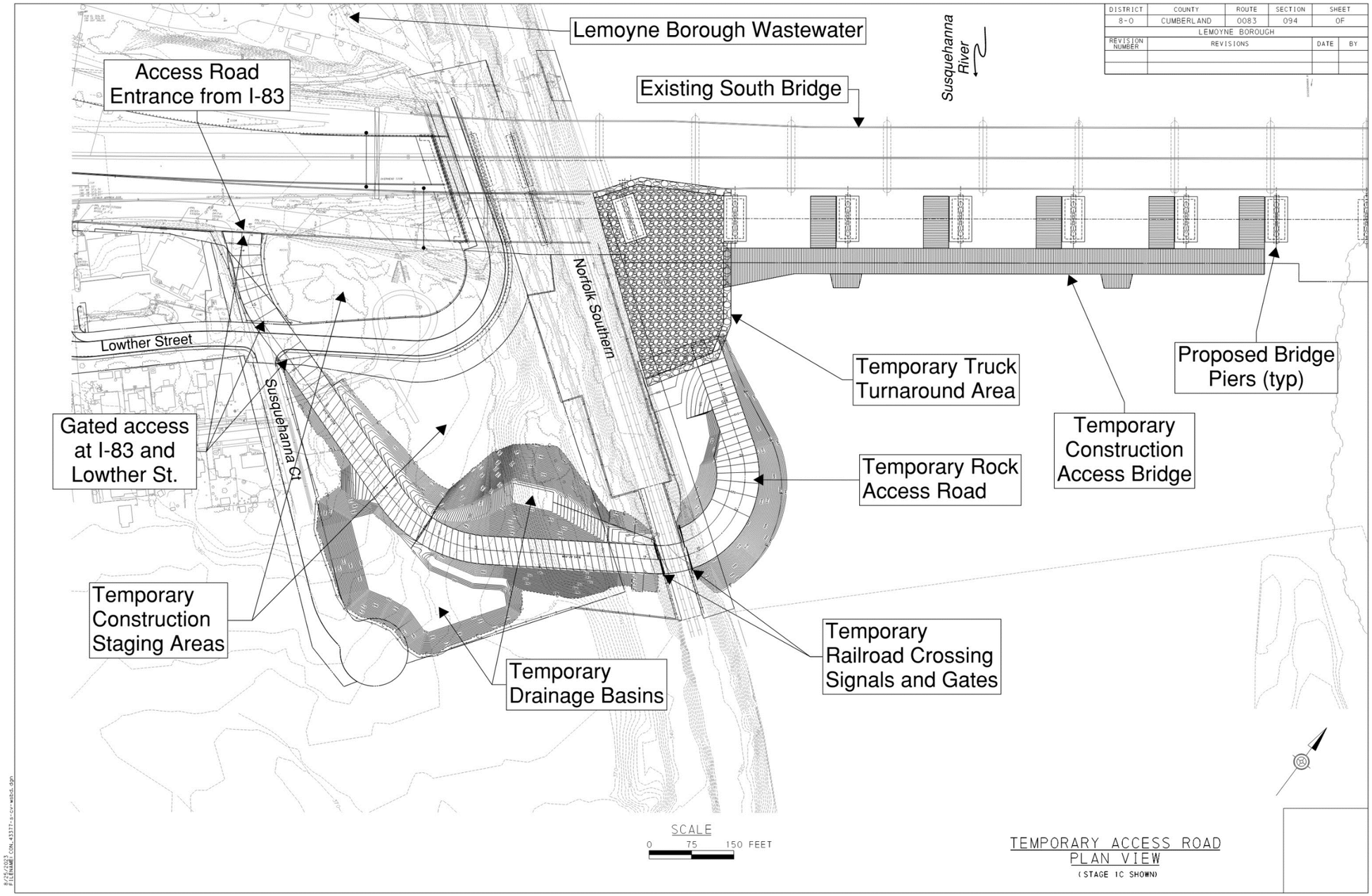

**Cost Estimate.** PennDOT has identified a preliminary cost range between $1.2 billion to $1.5 billion for the I-83 South Bridge Project, including reconstruction of the Lemoyne and Front Street/2nd Street interchanges and the viaduct from the river to Cameron Street. Because this is a major project (more than $500 million), FHWA requires a Cost and Schedule Risk Assessment review that involves the identification and analysis of potential risks. Because of uncertainty and risks at this early stage of engineering design, cost estimates are often presented as a range.

## 2.2 Other Alternatives Considered

As discussed in **Chapter 1**, the 2019 *River Bridges Master Plan*'s analysis of the South Bridge indicated the bridge is approaching the end of its serviceable lifespan. As a result of this study, PennDOT initiated studies of potential South Bridge alternatives. A memorandum[19] was prepared to summarize the alternatives that were investigated and discuss whether each alternative would meet the project's purpose and needs. South Bridge alternatives investigated included the build alternative and two rehabilitation alternatives. Due to the constraints in the project area, only one build alternative was found to be reasonable; it was developed to avoid and/or minimize effects on a variety of resources, including urban development on both shores, the Dock Street Dam just to the north of the proposed alignment, and traffic impacts during construction (see **Section 2.1**).

Also in 2019, analysis was conducted to evaluate potential alternatives for reconstructing the viaduct from the river to Cameron Street, including reconstruction of the Front Street/2nd Street interchange.

The alternatives considered and reasons for not carrying some forward are discussed below.

### 2.2.1 No-build Alternative

Under the no-build alternative, increasing frequency of inspections and maintenance would be needed, such as improvements to the existing failing pavement. This alternative would fail to address other project needs such as fixing critical elements of the bridge, accommodating future traffic volumes, and addressing the identified bridge and roadway deficiencies. The South Bridge and East Shore Viaduct are nearing the end of their useful life. Without replacement or full rehabilitation, these bridge structures will need more frequent maintenance and repairs. However, such maintenance can only extend the service life of these bridges for so long before they are at risk of failure. If the bridge required freight restrictions or failed, alternate routes would need to be used. This would lead to increased traffic volumes on local roads, increased congestion in the greater Harrisburg area, and longer travel times. In turn, the increased volumes can lead to increased conflicts between motorists, residents, pedestrians, and bicyclists along the detour routes. As a critical link in the regional and national highway network for vehicle and freight travel, allowing the deterioration of these bridges to reach that level is not reasonable; therefore, due to the project needs, the no-build alternative would not be a reasonable alternative.

[19] *I-83 South Bridge, Technical Memo for the Dismissal of Rehabilitation Alternative* (February 2021)

The no-build alternative is presented in this EA as a baseline for comparison purposes only.

### 2.2.2 South Bridge Rehabilitation Alternatives

Two rehabilitation strategies were considered under the rehabilitation alternative: (1) major substructure modification to support a superstructure replacement; and (2) in-place rehabilitation of the existing structure. The rehabilitation alternative would only meet three of the five project needs (see **Chapter 1, Section 1.3.2**, Project Needs). Project Needs 3 and 4 would not be met, since no capacity would be added to the bridge, and the rehabilitation would not update the facility to current design standards. Project Needs 1, 2, and 5 could be met with the rehabilitation alternative:

- **Project Need 1:** Rehabilitation would address the structural condition of the bridge; however, the level of additional service life of the bridge is uncertain given the complexities associated with addressing the fatigue details and the age of the existing structure.
- **Project Need 2:** The existing pavement could be replaced, which would address the need to replace the 50-plus year-old pavement.
- **Project Need 5:** Rehabilitation of the South Bridge would improve bicycle and pedestrian mobility on the west shore if the SR-2035 (Bridge Street/S. 3rd Street) bridge would be replaced and widened as part of the rehabilitation project.

The cost of rehabilitating the South Bridge was estimated at $500 million to extend the life of the bridge approximately 40 years ($380 million for the initial rehabilitation work, plus an additional $120 million in maintenance costs over the 40 years). This is in contrast to $570 million for full replacement of the South Bridge which includes widening it to carry five lanes in each direction with full shoulders. A fully reconstructed South Bridge would have an anticipated life span of 120 years and maintenance costs over the first 40 years of that lifespan would be minimal (approximately $5 million). If the South Bridge is rehabilitated instead of replaced, there would have to be a transition area to integrate the widened I-83 viaduct and CD road into the rehabilitated, but not widened, South Bridge. The I-83 northbound to 2nd Street ramp would be replaced and also require a transition area at the connection of the rehabilitated South Bridge and the 2nd Street ramp bridge (this ramp starts on the South Bridge structure). When rehabilitation of the South Bridge is no longer feasible and the bridge must be replaced, approximately $75 million of the total project costs for replacing the viaduct and 2nd Street/Front Street interchange as part of the rehabilitation would be lost due to the reconstruction of both temporary transition areas.

Additionally, the rehabilitation alternative would have substantial, multi-year traffic impacts during construction, with narrowed lanes and lane closures. In contrast, the replacement bridge would be constructed by maintaining traffic on the existing bridge while the new northbound lanes are built, transferring traffic to the new structure, then demolishing the existing structure and building the new southbound lanes in its place. This would minimize disruption of traffic flow throughout the construction process.

Because the rehabilitation alternative would not meet all project needs; would result in substantial, multi-year traffic impacts; and would require a substantial investment for limited life extension of the bridge, it was dismissed from further consideration. Additional information on the reasons for dismissing the rehabilitation strategies are summarized below.

#### Strategy 1 – Substructure Modification with Superstructure Replacement

The level of substructure modification necessary to support a new multi-girder structure would be substantial and would be comparable to full replacement of the bridge. Additionally, since the existing bridges are two-girder systems, they cannot be partially demolished to stage maintenance of traffic. As a result, traffic would need to be entirely diverted from one structure to the adjacent structure. Diverting the traffic to one structure would result in substantial delays during peak traffic hours. Since this type of rehabilitation of the South Bridge would take several years to complete, the delay would last approximately 4 years (2 years for each direction). This level of traffic impact was deemed undesirable.

#### Strategy 2 – In-place Rehabilitation of Existing Structure

In-place rehabilitation of the existing South Bridge would include removing the bridge deficiencies, including:

- Removing fatigue/fracture prone details
- Repairing steel cracks
- Repairing deteriorating steel
- Replacing bearings
- Replacing the bridge deck
- Painting

While there is a procedure available to address fatigue-prone bridge welds, it does not fix problems where cracks currently exist and is not effective on all types of cracks that exist on the South Bridge. While, in theory, the procedure adds years to the bridge's lifespan, it does not fully solve the problem, just delays the end of the bridge's serviceable lifespan.

Replacement of the bearings and bridge deck would require moving traffic from one structure to the adjacent structure while repairs are being completed. Similar to the impacts mentioned in Strategy 1, this would result in substantial delays during peak traffic hours. While the time needed for these repairs would not be as long as that needed for modification of the superstructure envisioned in Strategy 1, it would still be extensive and therefore is not desirable.

### 2.2.3 East Shore Alternatives Considered

The engineering analysis for the east shore is summarized in the *I-83 Section 3 Reconstruction Alternatives Analysis Report* (PennDOT 2019). That analysis considered potential improvements that could address the roadway deficiencies, operational issues, and safety issues identified in the purpose and need.

At the Front Street/2nd Street interchange, three options were investigated:

1. A new semi-direct alignment for the northbound off ramp while maintaining the other existing ramp movements as is;
2. A trumpet interchange to realign the northbound on and off ramps and maintain the existing southbound on and off ramp movements as is; and
3. Use/retain all existing ramp movements.

Option 1 was retained because it provided sight distance and shoulder widths that avoided design exceptions. Option 2 was eliminated because it increased the required right-of-way needed without improving the design speed of the northbound on and off ramps. Option 3 was eliminated due to the need to eliminate the limiting clearances under existing I-83 and the sight distance and shoulder width design exceptions that would be required to satisfy traffic volumes.

In addition to the interchange, potential alignments were considered for mainline I-83 (viaduct), local streets, and ramp connections. Widening the viaduct to the north or south was considered, but the widening would have to tie in to the South Bridge. Widening to the north could affect the Dock Street Dam and Harrisburg City's Front Street Sewage Pumping Station, so widening to the south was determined preferrable. Widening would be limited to the area immediately to the south to avoid the need for acquisition of right-of-way or aerial easements from Amtrak. For these reasons, the viaduct was proposed to stay on its current alignment with widening to the south to tie in with the South Bridge.

# 3.0 Affected Environment and Environmental Consequences

## 3.1 Introduction

**Chapter 3** discusses the affected environment and environmental consequences for resources anticipated to experience impacts from the I-83 South Bridge Project. Each resource section includes a discussion of the affected environment and an analysis of the environmental consequences including the anticipated direct and indirect impacts caused by the project and proposed mitigation measures to avoid or reduce potential impacts. Temporary construction impacts are summarized in **Section 3.10** and cumulative impacts are discussed in **Section 3.12**. Direct impacts are caused by the project and occur at the same time as project implementation, whereas indirect impacts are caused by the action but occur later in time or are farther removed in distance from the project. Construction impacts generally are temporary and occur solely because of construction activities. Cumulative impacts are the impacts on the environment that result from the incremental impacts of the action when added to other past, present, and reasonably foreseeable future actions, regardless of what agency or person undertakes such other actions.

As mentioned in **Chapter 1**, a project area was identified based on the extent of anticipated environmental impacts. For direct impacts, this includes ground disturbing activities and temporary or permanent land acquisition related to anticipated construction techniques, sometimes referred to as the project footprint. The project area is depicted in **Figure 1-1**. For resources where the impact boundary might differ, it is described or mapped within the discussions of those resources in this chapter.

The proposed build alternative would not impact the following resources, and no further discussion is presented: coastal zones, wild and scenic rivers, national natural landmarks, wildlife sanctuaries/refuges, important bird and mammal areas, state forest land, state game lands, unique geological features, productive agricultural resources, Section 6(f) resources, Stafford Act properties, and national historic landmarks.

The following discussion will address the proposed build alternative's anticipated effects to: natural resources such as surface water resources, wetlands, floodplains and flood hazard areas, and vegetation and wildlife; socioeconomics and land use; visual resources; noise; air quality and greenhouse gases; hazardous and residual waste sites; cultural resources; energy; Section 4(f) properties; and low-income and minority (environmental justice) populations. Temporary impacts during construction and cumulative impacts are also discussed.

# 3.2 Natural Resources

## 3.2.1 Introduction

This section summarizes natural resources and potential impacts to natural resources within the project area associated with the build alternative in comparison with the no-build alternative. Areas of analyses for this section include surface water resources; wetlands; floodplains and flood hazard areas; and vegetation and wildlife, including wildlife and habitat, invasive species, and threatened and endangered species.

**Detailed information on the natural resources analysis is presented in:**

- *Wetland Identification & Delineation Report SR 0083 Section 079* (Revised September 2018)
- *Wetland Identification and Delineation Report for S.R. 0083-094 John Harris Memorial (South) Bridge* (January 2021)
- *Interstate 83 South Bridge over Susquehanna River Hydrologic and Hydraulic Memo* (March 2022)
- *Wetlands and Waterways Identification and Delineation Addendum for S.R. 0083 South Bridge* (April 2022)
- *I-83 South Bridge PNDI Receipt, PNDI-718369 Final 5* (May 2023)

## 3.2.2 Methodology, Project Area, Sources

The methodology for each natural resource section varies, but in general consisted of identifying a project area boundary based on anticipated impacts; conducting desktop studies, field studies, and analyses; and then summarizing the results of these investigations in technical reports (see inset box). The project team identified the necessary permits, calculated impacts, and considered mitigation measures to off-set adverse effects. The methodology for each natural resource subsection is described in further detail below.

## 3.2.3 Surface Water Resources

The U.S. Army Corps of Engineers (USACE) and U.S. Environmental Protection Agency (USEPA) are the federal agencies that regulate Waters of the United States (WOTUS) as governed by Section 404 of the Clean Water Act (CWA)[20]. Guidance in the Clean Water Rule (as derived from the CWA) was used to determine if a channel met the definition of a body of water that is regulated by the federal government. Waterways have been delineated using the ordinary high-water mark as defined by 33 CFR 328.3. Because the Susquehanna River is a navigable waterway, the USACE will have jurisdiction over the river and Paxton Creek, a tributary to the Susquehanna River.

[20] "Waters of the United States" (WOTUS) is a threshold term establishing the geographic scope of federal jurisdiction under the CWA. WOTUS is not defined in the CWA but has been defined by the USEPA and USACE as all waters that are used for interstate and foreign commerce, all interstate waters, tributaries of waters, the territorial sea, and wetlands adjacent to waters. See USEPA 2021 for additional information. In May 2023, the Supreme Court ruled (Sackett II Decision) that waters are protected by the CWA when they are "relatively permanent, standing or continuously flowing tributaries connected to traditional navigable waters, the territorial seas, or interstate waters."

The Pennsylvania Department of Environmental Protection (PADEP) is the state agency that regulates water resources under Title 25, Environmental Protection, Chapter 105 of the Dam Safety and Encroachments Act; the Clean Stream Law; and Section 401, Water Quality Certification, of the CWA. Water resources under the jurisdiction of Pennsylvania have been delineated as per the definition of a watercourse under 25 Pennsylvania (PA) Code Section 105.1. Under this definition, a watercourse is a channel or conveyance of surface water having defined bed (bottom of stream) and banks (sides of stream), whether natural or artificial, with perennial (constant) or intermittent (not constant) flow.

**What is the ordinary high-water mark?**

term ordinary high-water mark means that line on the shore established by the fluctuations of water and indicated by physical characteristics such as a clear, natural line impressed on the bank, shelving, changes in the character of soil, destruction of terrestrial vegetation, the presence of litter and debris, or other appropriate means that consider the characteristics of the surrounding areas.

## Affected Environment

Two waterways, the Susquehanna River and Paxton Creek, were identified within the project area. Both waterways are classified by PADEP as warm water fisheries. In the project vicinity, the Susquehanna River flows in a southeasterly direction, with a well-defined channel of varying depths depending on the time of year. The channel is characterized as a bedrock and sediment substrate. The existing South Bridge has 18 piers in the river, encompassing approximately 0.75 acre (see **Table 3-1**). The Susquehanna River, which is considered a traditional navigable water, is depicted in **Figure 3-1.** It is characterized as perennial (i.e., constant flow, mostly groundwater) based on definitions found in 25 PA Code Section 87.1. Refer to the *Wetland Identification and Delineation Report for S.R. 0083-094 John Harris Memorial (South) Bridge* (January 2021) for additional details.

**View of Paxton Creek under the I-83 Viaduct**



Paxton Creek within the project area flows from north to south under the existing I-83 viaduct, east of the Front Street/2nd Street interchange. Paxton Creek is depicted in **Figure 3-1** and is characterized as a perennial stream. Within the project area, Paxton Creek is concrete-lined as shown in the inset photo, and spanned by the existing viaduct. Refer to the *Wetland Identification & Delineation Report SR 0083 Section 079* (Revised September 2018) for additional details.

**Table 3-1. Surface Water– Existing Conditions**

| Existing Feature | Metric | Paxton Creek (Perennial) | Susquehanna River (Perennial) |
|---|---|---|---|
| Existing Piers | Existing Number of Lines[a] of Piers in Stream/River | 0 | 18 |
| Existing Piers | Existing Area/Volume of Piers in Stream/River | 0 | 0.75 acre |
| Existing Bridge Deck | Measurement upstream to downstream | 140 feet | 145 feet |
| Existing Bridge Deck | Measurement top of bank to top of bank | 25 feet | 3060 feet |

Notes:
[a] There are 18 existing lines of piers that support the current bridge. They are continuous across the full bridge width. The replacement bridge will have a break in the piers between the northbound and southbound directions.

**Figure 3-1. Wetlands and Waters in the Study Area**

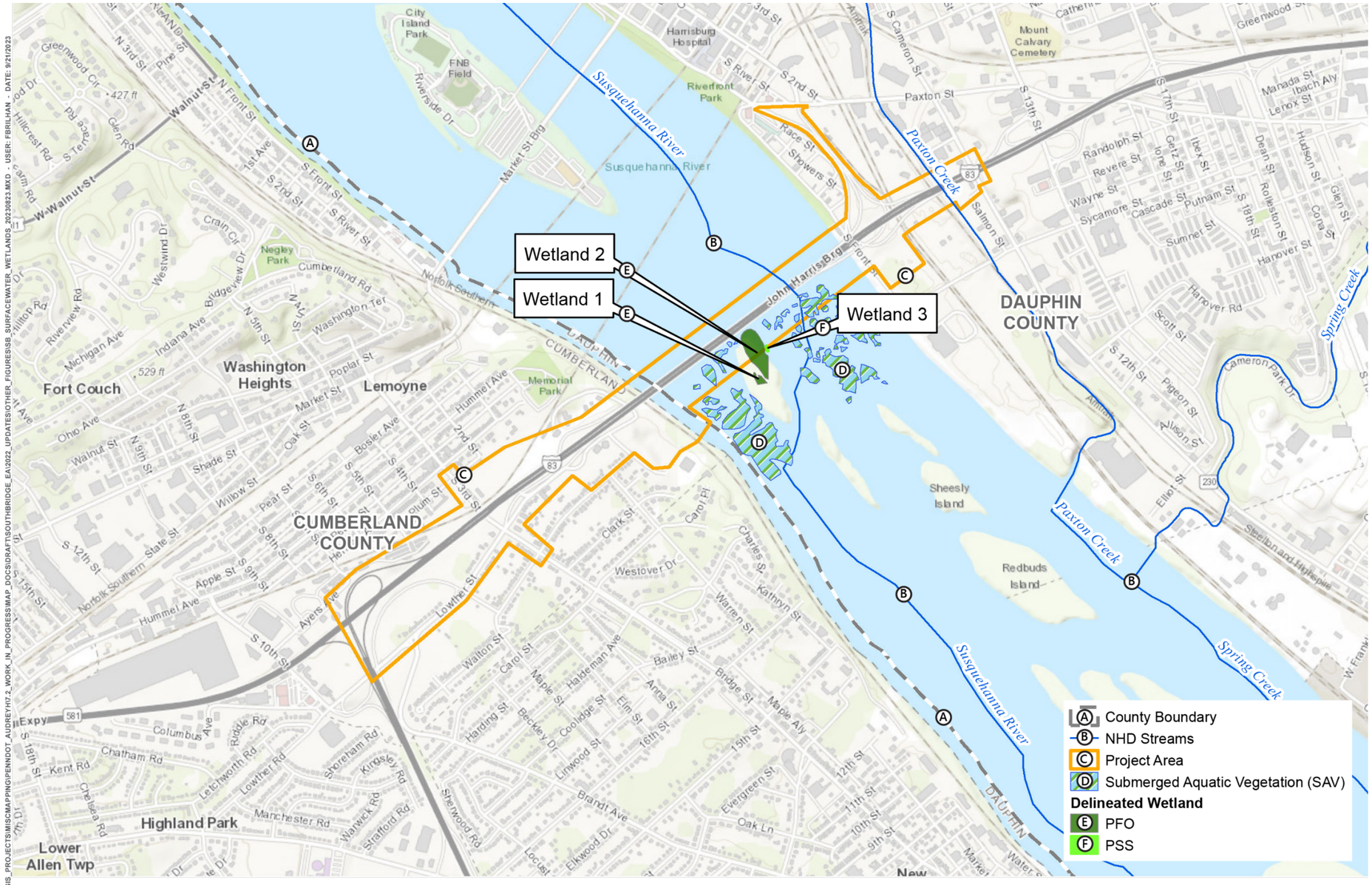

Areas of submerged aquatic vegetation (SAV) are abundant in the Susquehanna River. Aerial photographs show SAV scattered throughout the river north of the project area, but lacking immediately upstream of the Dock Street Dam, likely due to deeper water above the dam. SAV is also lacking immediately downstream of the dam and in the immediate vicinity of the existing I-83 bridge. SAV is prevalent again a short distance south of the existing I-83 bridge continuing downstream of the project area.

Investigation of the SAV to the south of the existing I-83 bridge identified SAV areas including water star-grass (*Heteranthera dubia*), water-celery (*Vallisneria americana*), and filamentous algae (suspected *Cladophora* spp.). The SAV areas are regulated as a part of the river and are protected as critical habitat. SAV beds represent important productive fish habitat. It should be noted that the SAV areas did not contain invasive species, nor did they contain threatened or endangered species. **Figure 3-1** depicts SAV areas delineated as part of this project.

SAV is abundant in the Susquehanna River and extends to the south (downstream) beyond the delineated area. SAV is not present under the existing bridge. It is assumed that this area lacks appropriate substrate, and/or is affected by the Dock Street Dam. Bathymetric survey to map the depths and shapes of underwater terrain were not conducted due to the close presence of the Dock Street Dam.

Due to the presence of the Dock Street Dam, boating is not allowed through the project area. Minimal warning signs and buoys are present.

## Environmental Consequences

**No-build Alternative.** The no-build alternative would not require new fill nor have other impacts within the Susquehanna River or Paxton Creek. However, the existing South Bridge and viaduct are approaching the end of their serviceable lifespan. Without replacement, the bridge and viaduct will need more frequent maintenance and repairs. Such maintenance can only extend the service life of the bridge and viaduct for so long before they are at risk of failure. If these structures were to reach that point, considerable temporary impacts to the Susquehanna River or Paxton Creek could occur from a full or partial collapse or from emergency construction projects. PennDOT would weight restrict or close the bridge or viaduct if their condition deteriorated to a point where failure was of concern.

**Build Alternative.** The build alternative would require impacts to surface waters, including permanent and temporary fill in the Susquehanna River. It is expected that the contractor would detail their bridge demolition plans and that standard best management practices (BMPs) would be employed to avoid or minimize construction impacts. Permits from regulatory agencies will be obtained to protect the environment and minimize environmental impacts from the project.

No fill impacts would occur in Paxton Creek, as the replacement viaduct would span the waterway and no piers would be placed within the waterway. Paxton Creek is approximately 25 feet from top of bank to top of bank within the project area. The existing structure over Paxton Creek is 140 linear feet from upstream to downstream. The new structure would be 218 linear feet wide,

resulting in an additional 78 linear feet from upstream to downstream. In accordance with PA DEP guidance, bridge deck area is calculated by measuring the width of the new bridge from bank to bank and from upstream to downstream; therefore, the total bridge deck area over Paxton Creek (25 feet by 218 feet) would be 0.12 acre. This bridge deck area replaces the existing bridge deck area, so it is not a new effect, and although the bridge is wider by 78 feet, its substantial elevation above the concrete-lined channel allows light to still reach the stream. A temporary crossing of Paxton Creek may be required during construction. It is expected that the temporary crossing would span the entire channel. Because no in-water piers would be required, no construction impacts are anticipated.

The build alternative was assessed for permanent and temporary impacts to the Susquehanna River. In accordance with PA DEP guidance, bridge deck area is calculated by measuring the width of the new bridge from bank to bank and from upstream to downstream. The new bridge structure would be 3,060 linear feet long and average 204 feet upstream to downstream, resulting in 14.33 acres of bridge deck area over the Susquehanna River. This bridge deck area replaces the existing bridge deck area so it is not a new effect. The existing bridge covers approximately 8.5 acres, so the net difference would be an extra 5.8 acres of bridge deck. The bridge is substantially elevated above the river such that light reaches the river. Shading of the waterbody by the bridge deck moves with the sun angle throughout the day and would not effect fish and vegetation in the river.

The replaced South Bridge would require 16 lines of bridge piers for the northbound and southbound lanes, plus an additional 4 piers for the northbound 2nd Street off ramp, resulting in 1.77 acres of fill in the river. In contrast, the existing bridge includes 18 lines of bridge piers totaling 0.75 acre of existing fill in the river, with a net increase of approximately 1.02 acres. Existing bridge piers will be removed to 24 inches or more below the river bottom.

Temporary impacts to the Susquehanna River would result due to the use of temporary construction bridge piers and cofferdams, as well as fill needed to access the temporary construction bridges on the west shore and enable trucks carrying large beams and other construction materials to turn around. (See **Figure 2-13**.) A portion of the west shore riverbank is currently concrete-lined as shown in the inset photo.

**View of concrete on west riverbank at existing I-83 South Bridge crossing**



It should be noted that four separate temporary construction bridges are anticipated to support construction; each is anticipated to be half the width of the river—two temporary construction bridges for construction of the northbound lanes, and two for construction of the southbound lanes. The temporary trestle bridge was selected over full-width or half-width causeways to minimize impacts to the riverbed, flood backwater levels, SAV, and wildlife species. The Susquehanna River is approximately 3/4 of a mile wide where I-83 crosses it; therefore, half of this width would remain fully open channel throughout construction. The other half would only be restricted where the temporary construction bridge piers are placed. As a result, river flow would remain largely unimpeded throughout construction, minimizing effects on fish passage. Velocity studies were conducted, and the temporary construction bridges cause negligible increases in water velocity.

The temporary impacts of the temporary construction bridges/access platforms were calculated for one temporary construction bridge. Only one of the four temporary construction bridges would be in place at any one time and each would be in place for about one year. **Table 3-2** presents impacts to surface waterbodies. For a discussion of wetland impacts see **Section 3.2.4**.

**Table 3-2. Surface Water Impacts – Build Alternative**

| Impact Type | Feature | Paxton Creek Impact | Susquehanna River Impact |
|---|---|---|---|
| Temporary Access Road from West Bank | Temporary Fill in the River | NA | 180,000 sq ft (4.02 acres) |
| Temporary Construction Bridge[a] | Trestle Bridge Deck | NA | Approximately 45 feet wide by 1,500 feet long with trestle fingers around piers Approximately 3.22 acres[a] |
| Temporary Construction Bridge[a] | Trestle Bridge Piers | NA | Approximately 0.02 acre[a] |
| Bridge Length | Top of Bank to Top of Bank | 25 feet | 3,060 feet |
| Bridge Width | Upstream to Downstream | 218 feet | 175 feet to 233 feet (Includes Ramp L) |
| Bridge Deck Area | Bridge Deck Shading | 0.12 acre (clear span) | 14.33 acres – shading variable based on sun angle |
| Permanent Piers in the River | 16 pier lines [b] South Bridge | NA | 74,000 sq ft (1.70 acre) |
| Permanent Piers in the River | 4 piers for Ramp L | NA | 3,200 sq ft (0.07 acre) |

Note: NA = not applicable

[a] Four temporary construction bridges would be required but only one would be in place at a time (extending about halfway across the river).

[b] There are 18 existing lines of piers that support the current bridge. They are continuous across the full bridge width. The replacement bridge will have a break in the piers between the northbound and southbound directions, but there will be 16 lines of piers supporting the bridge. Four additional piers will be supporting the northbound exit ramp to 2nd Street.

The replacement bridge would shade 0.58 acre of SAV and impact 0.1 acre of SAV for pier placement. During construction, 0.66 acre of SAV would be impacted due to the temporary construction bridges. Within the study area, there are approximately 3.50 acres of SAV habitat and, as illustrated on **Figure 3-1**, there are approximately 20 acres of SAV within the mapped area, with more of this habitat type extending beyond what was mapped for these studies. The mapped area is based on historic aerial photographs that show the limits of these vegetated beds. Aerials were found on PASDA and Google Earth and ranged from 2008 to 2019.

The SAV in the Susquehanna River is native and composed of common species found within the middle reach of the Susquehanna River. SAV beds are dynamic in nature due to the fluctuation of river velocities and how the SAV species reproduce. Water star grass reproduces when stems or stem tips break off and lodge into the sediment of the stream/river. The stems from these plants survive winter in the river substrate, then grow into new plants in spring. Water-celery reproduces by sending out runners. SAV bed limits and area coverage change year to year depending on the river depth and velocities. The SAV beds are valuable as nesting, spawning, and nursery cover for aquatic species; the abundance and commonality of the species would allow species using this habitat to shift downstream to other submerged vegetated areas during construction. **Figure 3-1** depicts SAV areas delineated as part of this project. SAV is abundant in the Susquehanna River and extends to the south (downstream) beyond this delineated area. Permanent impacts to the SAV beds total approximately 18% of the SAV within the study area but account for only approximately 3% of the SAV within the mapped area. Temporary impacts are approximately 18% of the study area SAV. Because of the abundance of SAV in this portion of the Susquehanna River, the permanent and temporary impacts to SAV are not anticipated to have a meaningful impact on aquatic life in the river. PennDOT will monitor the SAV beds before, during and after construction to ensure the SAV beds re-establish naturally, with details of the monitoring program to be determined during permitting.

While the Susquehanna River is generally navigable, in a letter issued by the U.S. Coast Guard (USCG) dated March 4, 2021, it was determined that a USCG bridge permit would not be required for this project because this section of the river is within the pre-approved section, which extends from the Maryland border to Sunbury, PA. The pre-approved section is not navigable due to the number of hydroelectric dams downstream of the project and number of dams upstream of the project, including the Dock Street Dam located immediately upstream of the existing bridge (see USCG correspondence in **Appendix B**). The USCG has requested that a bridge maintenance project plan be submitted for the project at least 30 days (preferably 90 days) prior to commencement of work on or over the Susquehanna River. Upon review and acceptance of the bridge maintenance plan, the USCG would publish a local notice to mariners and forward an acceptance letter to PennDOT.

A CWA Section 404 and PADEP Chapter 105 joint permit (JPA) would be required for the project and would need to account for impacts to WOTUS in the project area. This would require coordination with regulatory agencies, preparation of permit applications, demonstration of

avoidance and minimization criteria, and mitigation to off-set impacts. An erosion and sedimentation control plan would be prepared as part of the JPA, which addresses the procedures and BMPs for the construction of the new bridges to limit impacts to surface waters. Additionally, PADEP would require a Chapter 102 permit for construction activities since earth disturbances are greater than 1 acre. Permit requirements are further discussed in **Section 3.2.4**, Wetlands.

Due to the overall length of South Bridge over the Susquehanna River and the relatively flat slope of the proposed structure, effective collection of stormwater on the entire South Bridge is not practical due to the large downspout diameter required to adequately collect and convey the stormwater to an off-bridge BMP. The proposed South Bridge design would include collection of stormwater over the first four spans from both the east shore (Spans 16-19) and west shore (Spans 1-4) to be discharged to off-bridge BMPs. The other spans would free-fall into the river. This is an improvement over the existing South Bridge, which currently does not collect any stormwater from the bridge and the scuppers (vertical openings in the bridge deck for drainage) free fall directly into the Susquehanna River. The proposed South Bridge would have additional through lanes and shoulders wide enough to accommodate emergency vehicles, which would improve response to incidents and spills that could potentially discharge contaminants into the river.

The City of Harrisburg has been re-evaluating river conditions in the project area to update the ATON plan and expand the boating exclusion area farther downstream from the dam, where buoys could be maintained with greater ease of access. In the meantime, PennDOT has prepared an ATON plan that incorporates the existing dam and new South Bridge and Front Street/2nd Street ramp and can be used by the City of Harrisburg after construction. This plan has been approved by the Pennsylvania Fish and Boat Commission (PFBC); see **Figure 3-2**. After construction of the South Bridge, PennDOT will work with the City of Harrisburg to determine future maintenance responsibilities of the instream aids to navigation.

**Figure 3-2. Approved Aids to Navigation (ATON) Plan (Boating Exclusion Area)**

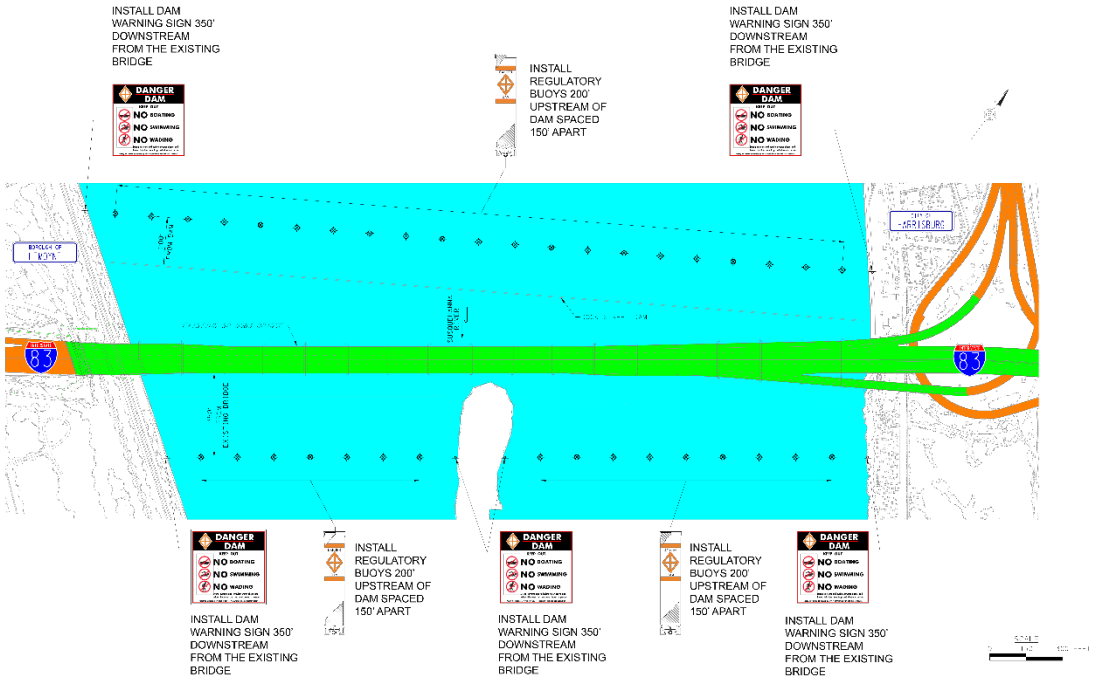


## 3.2.4 Wetlands

The project team investigated the project area for wetlands using National Wetland Inventory maps, PADEP modeled wetlands, and fieldwork using USACE's (1987) *Corps of Engineers Wetland Delineation Manual* in conjunction with the *Regional Supplement to the Corps of Engineers Wetland Delineation Manual: Eastern Mountains and Piedmont Region (Version 2.0)* (USACE 2012). Identified wetlands were classified in accordance with the *Classification of Wetlands and Deepwater Habitats of the United States* (Cowardin et al. 1979). Additionally, the team completed a functional assessment (to determine functions and values) of each wetland using USACE's *New England District, Highway Methodology Workbook Supplement;* and *Wetland Function and Values, A Descriptive Approach* (USACE 1993), which is included in the *Wetland Identification and Delineation Report for S.R. 0083-094 John Harris Memorial (South) Bridge* (January 2021), the *Wetland Identification & Delineation Report SR 0083 Section 079* (Revised September 2018), and *Wetlands and Waterways Identification and Delineation Addendum for S.R. 0083 South Bridge* (April 2022).

### Affected Environment

Field investigations identified three wetlands within the project area, covering a total of 2.78 acres, as shown in **Figure 3-1**. Two palustrine forested wetlands and one palustrine scrub/shrub wetland were identified and delineated on the island complex immediately downstream of the South Bridge. Wetlands were not determined to be of exceptional value or high quality based on the criteria listed in 25 PA Code Section 105.17.

## Environmental Consequences

**No-build Alternative.** The no-build alternative would not impact any wetlands. As stated previously, if the existing South Bridge and viaduct are not repaired, it could eventually lead to emergency repairs from a partial or full collapse, which has the potential to lead to additional wetland or WOTUS impacts. However, PennDOT would weight-restrict or close the bridge if conditions reached a level of concern.

**Build Alternative.** No permanent or temporary impacts to Wetlands 1 or 3 are anticipated. There would be both temporary and permanent impacts to Wetland 2. During construction, cofferdam placement and construction bridge piers would temporarily impact 0.31 acre within Wetland 2. Permanent impacts to Wetland 2 would result from one bridge pier, totaling 0.03 acre (Pier #10). **Table 3-3** summarizes wetland impacts within the project area, and **Figure 3-3** depicts the wetland impacts.

Additional effects to Wetland 2 would result from tree cutting of 0.41 acre within Wetland 2 for the temporary construction bridges and crane activity. This 0.41 acre includes the 0.31 acre of temporary impact noted above for the temporary cofferdam and construction bridge piers. By cutting the trees, the ecological community type of the wetland would change from a palustrine forested wetland to a palustrine emergent/scrub-shrub wetland. Trees and shrubs are to be cut, but not grubbed (no removal of roots), to minimize impact to the wetland and stabilize the island soils. After construction is complete, no ongoing vegetation maintenance would be conducted in the wetland which will allow for the regrowth of woody wetland vegetation.

A CWA Section 404 and PADEP Chapter 105 joint permit (JPA) would be required for the project and would need to account for impacts to wetlands in the project area. This would require coordination with regulatory agencies, preparation of permit applications, demonstration of avoidance and minimization criteria, and mitigation to off-set impacts. Mitigation for permanent wetland impacts will be determined during permitting and may include purchasing credits from a mitigation bank to off-set the wetland impact area, using an in-lieu fee program, using a PennDOT wetland bank, or a combination of these options.

**Table 3-3. Wetland Impacts in the Project Area**

| Proposed Feature | Metric | Wetland 2 |
|---|---|---|
| Temporary Habitat Conversion | Cutting Palustrine Forested Wetland | 17,900 sq ft (0.41 ac)[a] |
| Temporary Construction Bridges | Temporary Area Impacts | 13,4000 sq ft (0.31 acre) |
| Bridge Deck (Shading) | Permanent Shaded Area | 9,700 sq ft (0.22 acre) |
| Bridge Piers | Permanent Area/Volume of Pier in Wetlands | 1,500 sq ft (0.03 acre) |

[a] Temporary cutting of forested wetland will convert the habitat to emergent and scrub/shrub. Regrowth of forested species will occur as the root zone will not be grubbed. The 0.41 acre of cutting includes the 0.31 acre of temporary construction bridges.

**Figure 3-3. Wetland Impacts in the Study Area**

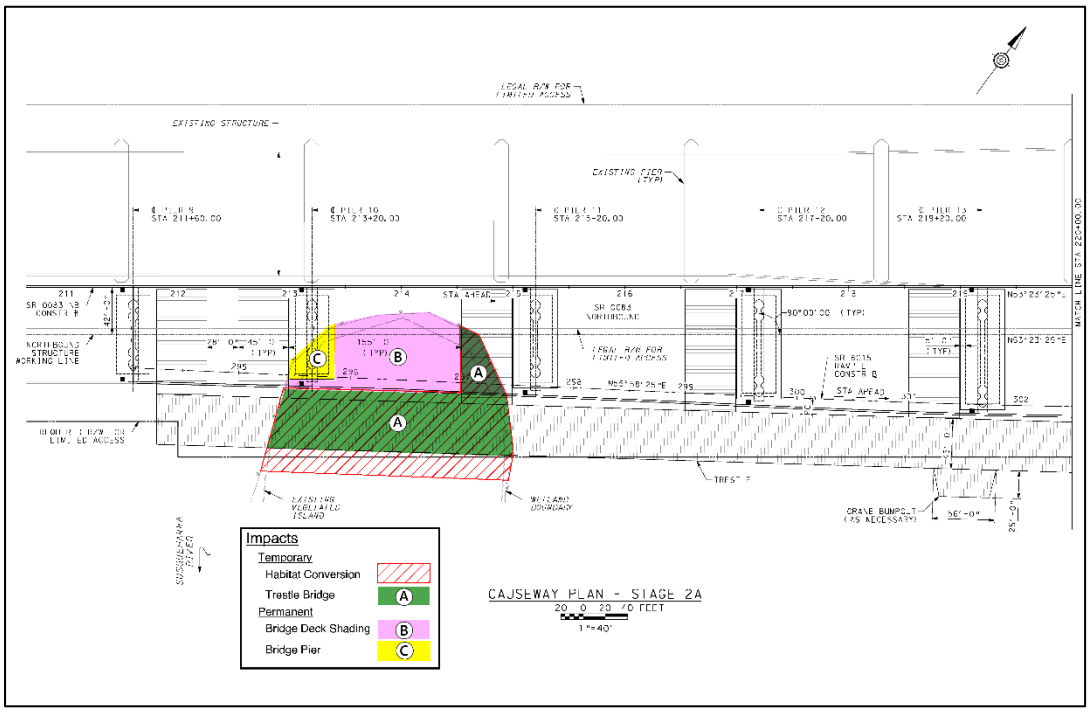


## 3.2.5 Floodplains and Flood Hazard Areas

Floodplains (i.e., any land susceptible to being inundated by floodwaters) are regulated under federal and state laws. The Federal Emergency Management Agency (FEMA) regulates floodplains under the National Flood Insurance Program (NFIP). Under this program, areas along streams/watercourses are delineated and mapped according to flood risk. The FEMA standard for the NFIP is to permit up to a 1.0-foot rise in water surface elevation for the 100-year flood. Development in the floodplain (including highways) is permitted if it does not cause an increase in backwater elevations in excess of 1.0 foot (USDOT 1986). Floodplains are further regulated under PADEP's 25 PA Code Chapter 106 regulations, which requires permits from the state for highways constructed within floodplains.

Floodways (i.e., the portion of the river and adjacent land reserved to discharge the base flood without cumulatively increasing the water surface elevation more than a designated height) are regulated under PADEP's 25 PA Code Chapter 105 regulations. Under these regulations, studies are required to be performed to ensure projects do not negatively impact people and property within floodplains. Hydrologic and hydraulic (H&H) studies are required to follow 23 CFR 650.115 and 650.117.

### Affected Environment

The Susquehanna River has a detailed FEMA study 100-year floodplain and regulatory floodway associated with it, as shown on **Figure 3-4**. The majority of the bridge, piers, and temporary construction bridge are proposed to be within the regulatory floodway. Paxton Creek has an extensive detailed FEMA study 100-year floodplain, which in combination with the Susquehanna

River, covers much of the east shore within the study area. The Paxton Creek floodway is mainly confined between the Amtrak rail corridor on the west and 10th Street on the east.

## Environmental Consequences

**No-build Alternative.** The no-build alternative would not have permanent or temporary impacts on the floodplain. However, if the existing South Bridge and viaduct are not repaired, there is a risk that debris could fall into the Susquehanna River or Paxton Creek. If this were to occur, it is anticipated that any such debris would be removed, and flood hazard risks caused by the debris would be temporary.

**Build Alternative.** The viaduct replacement is expected to have fewer piers than the current structure and would span over Paxton Creek. The viaduct would not result in a substantial encroachment of the floodplain. A temporary crossing of Paxton Creek may be required during construction. It is expected that the temporary crossing would span the entire channel, and modeling found that no impacts would be anticipated.

For the South Bridge, as stated in the *Interstate 83 South Bridge over Susquehanna River Hydrologic and Hydraulic Memo* (March 2022), the results of the flood hazard modeling indicate the proposed build alternative would not result in water surface elevation increases for the 50-year PennDOT design event or the FEMA 100-year event; therefore, the build alternative would not result in permanent floodplain impacts. In fact, hydraulic modeling indicates that each of the examined structure types pass the FEMA 100-year event with approximately 20 feet of freeboard, and water surface elevations upstream of the bridge are reduced by a maximum of 0.03 to 0.06 foot. No increases are indicated at any sections; see *Interstate 83 South Bridge over Susquehanna River Hydrologic and Hydraulic Memo* (March 2022).

The South Bridge build alternative would result in temporary impacts to the Susquehanna River floodplain during construction. Construction impacts for floodplains are described in this subsection due to the nature and size of the potential impacts. For additional discussion regarding construction impacts, refer to **Section 3.10**. Potential impacts from the temporary construction bridges anticipated to be used to construct the proposed build alternative were evaluated to determine their effects on flood hazards. A description of the temporary construction bridge is included in **Chapter 2**.

**Figure 3-4. Floodplains and Flood Hazard Areas in the Project Area**

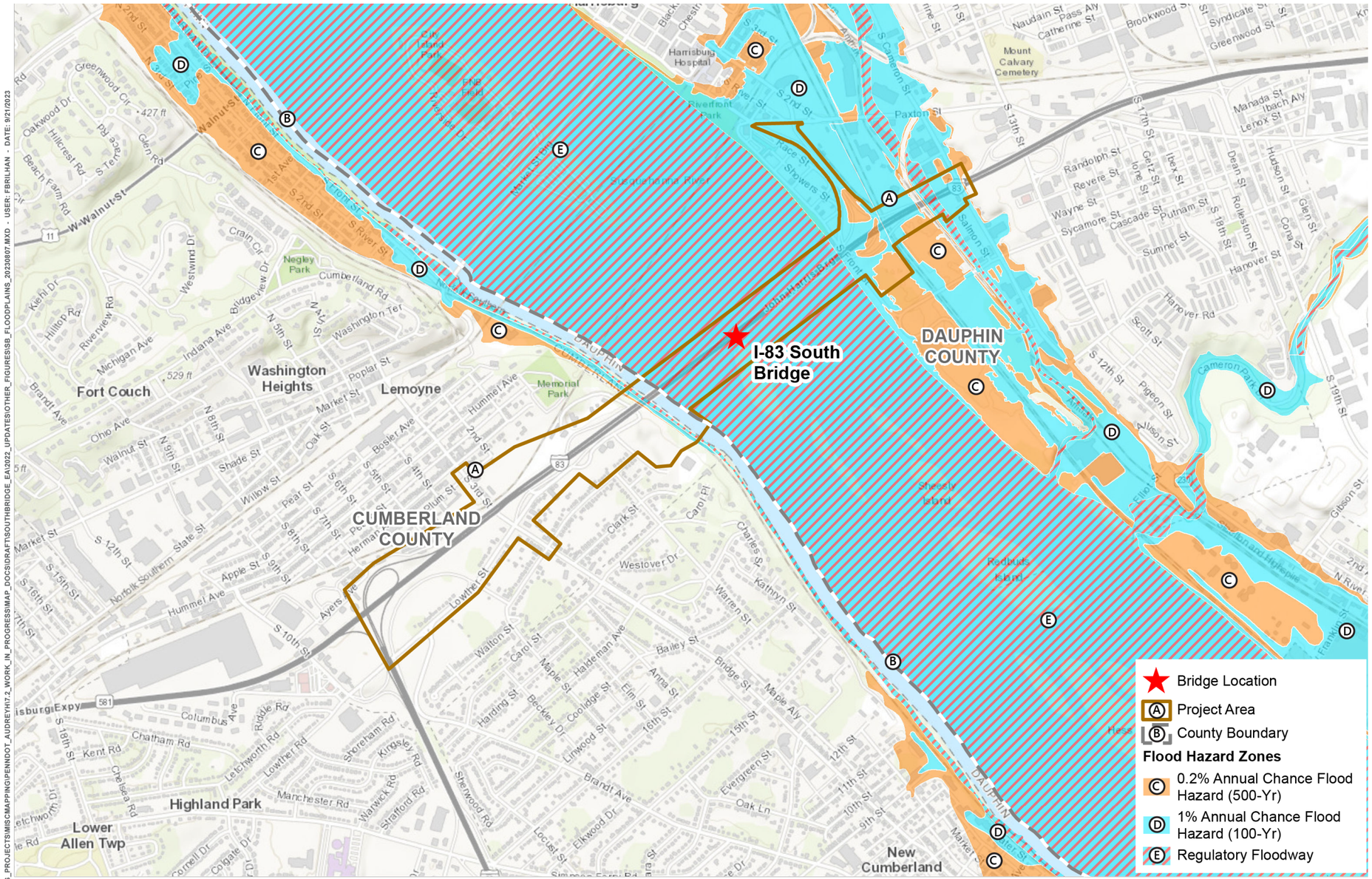

As with most bridge replacement projects, temporary water surface elevation increases are typically unavoidable during construction. After evaluating several designs including a full-width rock causeway and half-width rock causeways, it was determined that a temporary construction bridge using a trestle design would result in lower temporary water surface elevation increases (0.6 foot for the 2-year event and 0.7 foot for the 5-year event as compared to 2.1 feet for causeway designs); this includes the proposed fill access road/work platform to enable trucks to turn around described in **Chapter 2**. Therefore, the temporary construction bridge has been evaluated for impacts and is anticipated to be the construction technique that would be employed[21]. See the *Interstate 83 South Bridge over Susquehanna River Hydrologic and Hydraulic Memo* (March 2022) for more details.

Based on PennDOT and PADEP Joint Agency Guidance (*Environmental Permitting Handbook* [PennDOT Publication 783 [2018]), temporary structures should be evaluated for a 2-year storm event; however, PADEP can request a higher storm event be analyzed to evaluate risk for larger bridge replacement projects with extended construction durations. Construction of the South Bridge could take as long as 8 years. To account for the longer construction duration, PennDOT also evaluated the 5-year storm event. The analysis found that the maximum temporary increase occurs at the cross section immediately upstream of the temporary trestle, which could result in an increase of 0.6 foot to the 2-year event and 0.7 foot to the 5-year event. Early coordination with the PADEP yielded direction to evaluate the 10-year event; however, the 10-year event is in a moderate flood state (USGS Gage Height = 20 feet) on the river, with many commercial/residential buildings affected. Therefore, it was determined that analysis would remain at the 5-year event.

Within the study area there are low-lying properties and buildings along the riverbanks within the existing 2- and 5-year event floodplains. These areas are on City Island and in Wormleysburg Borough. According to the existing surveyed Finished Floor Elevations, no additional structures would be impacted by the 2- or 5-year event under temporary conditions during construction. See the *Interstate 83 South Bridge over Susquehanna River Hydrologic and Hydraulic Memo* (March 2022) for details. It is noted that the river is also prone to ice jams that cause temporary but potentially major increases in flood levels. The contractor would be required to develop a plan to address this issue, including removal of equipment from the temporary construction bridges when prudent.

### 3.2.6 Vegetation and Wildlife

#### Wildlife and Habitat

Transportation projects can divide wildlife habitats and travel corridors, which can cause safety concerns for both wildlife and the traveling public if not identified and managed properly. Through a partnership of the Pennsylvania Game Commission (PGC), the PA Department of Conservation

[21] The construction method evaluated in this EA has been designed to minimize the effects as per the H&H studies. The final design team and/or construction contractor could potentially propose a construction method that is different than what is evaluated here; however, should the impacts be different or greater than have been disclosed in this EA, a re-evaluation of the effects would need to be undertaken.

and Natural Resources, the PA Fish and Boat Commission, and the Western Pennsylvania Conservancy, and in cooperation with the U.S. Fish and Wildlife Service (USFWS), the Pennsylvania Natural Heritage Program (PNHP) provides an ecological database supported by several scientific sources. The PNHP on-line screening tool enables project reviews for the identification of potential habitat and species of concern through the County Natural Heritage Inventories. Through this screening process, a Conservation Planning Report was generated for the project area (PNHP 2021, updated 2023).

The *Pennsylvania Wildlife Action Plan* (PGC and PFBC 2015-2025) is a non-regulatory conservation plan that works to prevent Species of Greatest Conservation Need from requiring federal protection under the Endangered Species Act (ESA). A Conservation Opportunity Area Report was generated for the project area. These resources were reviewed to identify potential areas of importance within the immediate project vicinity.

***Affected Environment***

Based on a review of secondary sources and available mapping from various agencies, no wildlife sanctuaries/refuges or critical/unique habitat areas are present within the project area. Similarly, based on review of the PNHP online tool, there are no designated Important Bird Areas or Important Mammal Areas within the project vicinity (in or adjacent, up or downstream) of the project area. Typical wildlife species are those found in an urban central Pennsylvania landscape, including small mammals, birds, reptiles, and amphibians (e.g., opossum, raccoon, eastern gray squirrel, eastern cottontail rabbit, green frog, eastern painted turtle, eastern rat snake, garter snake). Within the Susquehanna River, wading birds (herons and egrets), ducks, cormorants, geese, and gulls are commonly seen.

According to the PNHP Conservation Planning Report, the project area is within core habitat areas or supporting habitat for species of concern. Several of the species of concern are freshwater mussels, and the distribution limits for the identified mussels are upstream of the Dock Street Dam. The dam acts as a barrier, and mussels have not been identified south of the dam within the project area.

PA Code, Chapter 93, Water Quality Standards, Drainage List "O" lists the main stem of the Susquehanna River, from its confluence with the Juniata River to the Pennsylvania-Maryland state border, as a warm water fishery with migratory fish. The PFBC does not stock trout in the Susquehanna River. The PFBC does not list the main stem of the Susquehanna River as a Wilderness Trout Stream, Class A Trout Stream, nor Natural Reproduction Trout Stream. With several sewage treatment plants, storm sewer discharges and agricultural run-off in the project area and region, the Susquehanna River does not exhibit high water quality conditions. However, the Susquehanna River is known for its large population of smallmouth bass and is a popular fishing river for species such as muskellunge, walleye, and catfish. Due to the smooth flowing water of the Susquehanna River and its large population of fish, it is a top-ranked fishing destination in the state.

In correspondence with the USFWS, it was noted that the project area contains SAV that supports the foraging, breeding, and nursery areas for resident fish and other aquatic organisms. The *Wetland Identification and Delineation Report for S.R. 0083-094 John Harris Memorial (South) Bridge* (January 2021) includes additional information regarding the submerged and floating vegetative species. The species identified are native, non-invasive species. SAV is prevalent in the Susquehanna River north of the Dock Street Dam and south of the existing I-83 South Bridge. It appears that the river dynamics associated with the Dock Street Dam create unsuitable area for SAV establishment in the vicinity of the dam both upstream and downstream. For additional discussion regarding SAV beds, refer to **Section 3.2.3**.

The Susquehanna River originates at Otsego Lake near Cooperstown, New York and meanders over 444 miles where it empties into the Chesapeake Bay near Havre de Grace, Maryland. In the 65-70 miles between the Chesapeake Bay and Harrisburg, there are four hydroelectric dams (Conowingo Dam, Holtwood Dam, Safe Harbor Dam and York Haven Dam) that impede migratory fish passage. Fish passage facilities operate at the Conowingo Dam each spring to assist migratory fish on their journey. Over 10,000 American shad were collected at the Conowingo Dam in 2023 and released above the Safe Harbor or York Haven Dams. The Dock Street Dam, a low-head dam located approximately 70 to 230 feet upstream of the South Bridge, is notched in several locations, which allows for the passage of fish.

American shad (*Alosa sapidissima*), Alewife (*Alosa pseudoharengus*), and American eel (*Anguilla rostrata*) are identified in the *Pennsylvania Wildlife Action Plan* (PGC and PFBC 2015-2025) as Species of Greatest Conservation Need. American shad and American eel are found in the Susquehanna River, migrating upstream through known breaches (notches) in the Dock Street Dam. **Table 3-4** notes shad and eel migration periods.

At the April 21, 2021 resource agency meeting, the PFBC noted that smallmouth bass spawning period extends from May 1 to June 15. In stream work should be restricted during this time period to minimize effects on spawning smallmouth bass.

**Table 3-4. Fish and Eel Migration Periods**

| Species | Upstream Migration Period | Downstream Migration Period |
|---|---|---|
| American shad | May 1 through the first week of June[a] | July 1 through November 15 (juvenile)<br>May 1 through July 1 (adult) |
| American eel | May 1 through September 15 | September 15 through February 15, whenever river temperature is above 37 degrees Fahrenheit for 4 consecutive days |

Source: Conowingo prescription, correspondence with USFWS dated April 21, 2021
[a] USFWS priority

### *Environmental Consequences*

**No-build Alternative.** Impacts to wildlife are not anticipated under the no-build alternative. However, as noted above, if the existing South Bridge and viaduct are not replaced, it could eventually be at risk of full or partial collapse. If this were to occur, debris could affect fish habitat

in the Susquehanna River. The debris would be removed, so the effect would be temporary. It is anticipated that PennDOT would weight-restrict or close the bridge if conditions reached a point warranting such actions.

**Build Alternative.** SAV and the fish species that inhabit the river would be temporarily affected by construction of the build alternative. Temporary construction bridges (trestles) would be erected from which the new South Bridge would be constructed. Four separate construction trestles would be built. Each would extend approximately half way across the river, leaving the other half of the river unrestricted. Only one construction trestle would be in place at any given time, and the trestle design of the temporary construction bridges would allow for fish passage, mitigating this potential temporary impact to migratory fish species. The proposed bridge would be wider than the existing bridge, and the proposed bridge and piers supporting it have larger footprints than the current bridge. This would result in net impacts to the Susquehanna River and fish habitat from the pier footings. The overhead bridge structure would shade additional river area; however, the height of the bridge and the space between the northbound structure and the southbound structure would allow light to reach the river surface. See **Section 3.2.3** for more detailed discussion of permanent and temporary stream impacts.

Potential effects on migratory fish species were discussed during an April 2021 meeting with Federal and State resource agencies. Velocity studies showed that water velocities would increase negligibly compared to normal river flow with the use of the temporary construction bridges (trestles) to build the new bridge. The discussion concluded with the PFBC indicating that there would be minimal impacts to the migration of these species with the use of temporary construction bridges instead of half-width rock causeways. While turbidity could be temporarily affected during installation of piers to support the new bridge and the temporary construction trestles, the Susquehanna River is a warm water fishery and is not a high quality waterway; therefore, effects are anticipated to be minimal. Erosion and sediment control plans and best practices to minimize effects will be followed.

In order to minimize effects on spawning smallmouth bass and the bass fishery in the Susquehanna River, in stream work restrictions would be adhered to from May 1 to June 15. This would include work such as the west shore temporary fill access road/work platform to enable trucks to access the temporary construction bridges and turn around, as well as pier construction for both the South Bridge and the temporary construction bridges.

### Invasive Species

According to the PA Department of Agriculture, invasive species are those that are non-native to Pennsylvania and tend to spread to a degree that causes harm to the environment, local species, or human interests. Invasive species include both plants and wildlife. Executive Order (EO) 13751, *Safeguarding the Nation from the Impacts of Invasive Species,* directs federal agencies to continue to prevent and control effects related to invasive species. PennDOT's *Invasive Species Best Management Practices* (PennDOT Publication 756 [2014]) provides BMPs to prevent the spread of invasive species during transportation design, construction, and maintenance. PennDOT has

taken the initiative to address invasive species within its rights-of-way by preparing guidance for its staff, as well as contractors working for the Department, to help them address invasive species throughout the life of a project from design, through construction, and through ongoing maintenance (PennDOT 2014).

### *Affected Environment*

PennDOT Publication 756 (2014), *Invasive Species Best Management Practices*, provides BMPs to prevent the spread of invasive species during transportation design, construction, and maintenance. Examples of invasive species observed within the project area include Japanese knotweed and purple loosestrife on the river islands as well as multiflora rose, tree-of-heaven, Norway maple, garlic mustard, Japanese wineberry, and bush honeysuckle along the roadway shoulders and riverbank. Butterfly bush grows aggressively along the Lemoyne exit ramp and Lowther Street near the river. Cumberland and Dauphin Counties are both existing quarantine counties for the spotted lanternfly. No known invasive aquatic species have been identified for the project area.

### *Environmental Consequences*

**No-build Alternative.** Under the no-build alternative, more frequent maintenance of the South Bridge and viaduct is anticipated. Maintenance equipment can be a vector for spreading invasive species. However, with adherence to PennDOT's adopted guidance (PennDOT Publication 756 [2014]), the potential invasive species impacts are anticipated to be low.

**Build Alternative.** Construction equipment can spread invasive species if seeds or vegetation adhere to tracks or wheels. However, with adherence to PennDOT's adopted guidance (PennDOT Publication 756 [2014]), the potential invasive species impacts are anticipated to be low. Project construction waste would be considered regulated articles,[22] and the construction contractor would be required to obtain the necessary permit to comply with the PA Department of Agriculture's *Order of Quarantine and Treatment: Spotted Lanternfly* (PA Department of Agriculture 2021).

## Threatened and Endangered Species

Threatened or endangered wildlife and plant species that are declining nationwide are protected under the federal ESA (16 United States Code [U.S.C.] Sections 1531–1543) and listed within 50 CFR 17 (Endangered and Threatened Wildlife and Plants). The USFWS and National Oceanic and Atmospheric Administration (NOAA) are the federal agencies responsible for administering the ESA to protect and recover imperiled terrestrial and freshwater (USFWS) and marine (NOAA) species. "Endangered" means that a species is in danger of extinction throughout all or a significant portion of its range. "Threatened" means that a species is likely to become endangered in the foreseeable future. "Candidate" means a species that is being considered for listing. If a Candidate

[22] Regulated articles are defined in the *Order of Quarantine and Treatment: Spotted Lanternfly* as any living life stage of the Spotted lanternfly and any material or object that may carry or spread the plant pest (such as brush, trees, bark, concrete, stone, construction waste, construction materials, vehicles, and equipment).

species becomes a Threatened or Endangered species, an evaluation would be required to determine the presence and potential effects of the project on that species.

Additionally, state law establishes a list of threatened or endangered species specific to Pennsylvania and includes rules on how agencies protect the state-listed species. Pennsylvania's protection of threatened or endangered species can be found within the Pennsylvania Fish and Boat Code (30 PA Consolidated Statute (CS) Sections 102, 2502, 2504, and 2506), Game and Wildlife Code (34 PA CS Sections 102, 925, 2164–2167, and 2924), Wild Resource Conservation Act (32 PS Sections 5301–5314), and the Conservation of Pennsylvania Native Wild Plants (17 PA Code Section 45.1–91). The PFBC is responsible for protecting reptiles, amphibians, fish, aquatic invertebrates, and freshwater mussels; the PGC is responsible for protecting mammals and birds; and the Pennsylvania Department of Conservation and Natural Resources (DCNR) is responsible for protecting plants and insects.

In Pennsylvania, the presence of threatened or endangered species are initially investigated using the online Pennsylvania Natural Diversity Inventory (PNDI) web mapping tool (PNHP 2021, updated 2023), which searches project footprints (plus an additional buffer) for potential impacts to federal and state-listed species and habitats based on the proposed project. Coordination with agencies can also be conducted through this online tool.

A PNDI was run on May 11, 2023, for the project area. Results of the screening identified the project as within the range of the Northern Long-eared bat spring staging and fall swarming habitat. USFWS provided an avoidance measure, that no tree cutting shall occur between May 15 and August 15. This restriction avoids the pup season, when females are giving birth and have non-volant (pups unable to fly).

The PNDI must be updated every 2 years. Additionally, an Agency Coordination Meeting (ACM) was held on April 21, 2021. Agency concerns were identified regarding SAV, American shad, and American eel populations and movement. These concerns were discussed above.

It is acknowledged that the green floater mussel (*Lasmigona subviridis*) is being advanced at the federal level and likely to be listed as endangered in the near future. Due to the close proximity of the Dock Street Dam to the I-83 bridge, it is unlikely that suitable mussel habitat is present. Other mussel species are known to be present in the Susquehanna River above City Island. It is also acknowledged that the Eastern hellbender (*Cryptobranchus alleganiensis*) is a PA amphibian species of concern. The Eastern hellbender requires streams with a constancy of dissolved oxygen, cool temperatures and flow found in swift water areas. The Susquehanna River within the South Bridge project area does not appear to meet the preferred habitat criteria for this species. If these or other species become state- or federally-listed threatened or endangered species, additional coordination will occur with the respective resource agencies as appropriate.

### 3.2.7 Natural Resources Mitigation Measures

For purposes of this document, mitigation includes avoidance, minimization, repair or restoration, reduction of impacts over time, or compensation.

Due to the need to replace the bridge, impacts to wetlands and waterways are unavoidable. The following measures have been incorporated into the design to offset effects:

- Monitor the shoreline and islands during construction to determine if erosion is taking place as a result of the temporary causeway and construction bridges; remediate if issues are noted.
- Replant the island and re-establish the shoreline (approximately 1,000 linear feet) once the temporary construction bridge/causeway is removed
- No tree cutting shall occur between May 15 and August 15. This restriction avoids the Northern Long Ear Bat pup season, when females are giving birth and have non-volant pups (pups unable to fly)
- Clear trees from the river island but do not grub to maintain root structure and stability of the island
- Prepare an erosion and sedimentation control plan during final design that addresses the procedures and BMPs, including Antidegradation Best Available Combination of Technologies, for the construction of the new bridges to limit impacts to surface waters
- Work to reduce the permanent effects to wetlands as part of design refinements during the Final Design process
- Purchase credits from a mitigation bank to off-set the wetland impact area; this could also be achieved using an in-lieu fee program, using a PennDOT wetland bank, or a combination of these options; details would be determined during permitting
- Design the construction causeway to include temporary construction bridge sections (trestles) to ensure fish and eel passage is maintained during construction
- Restrict in-stream work (construction/removal of causeways) from May 1 to June 15 due to smallmouth bass spawning
- Develop a plan to address potential ice dams and flooding during construction, including removal of equipment from the temporary construction bridges when prudent
- Install dam warning signs and buoys up and downstream of the Dock Street Dam in accordance with the approved ATON plan (**Figure 3-2**)
- Prepare a bridge maintenance plan to be submitted to the USCG for the project at least 30 days (preferably 90 days) prior to commencement of work on or over the Susquehanna River; upon review and acceptance of the bridge maintenance plan, the USCG would publish a local notice to mariners and forward an acceptance letter to PennDOT
- Follow PennDOT's invasive species guidance and BMPs (PennDOT Publication 756 [2014]) during construction to minimize the potential for invasive species to take root or spread during construction

- Obtain the construction permit to comply with the PA Department of Agriculture's *Order of Quarantine and Treatment: Spotted Lanternfly* (PA Department of Agriculture 2021)
- Develop a monitoring plan to monitor the SAV beds before, during, and after construction to ensure they re-establish naturally; details would be determined during permitting
- Remove existing bridge piers to 24 inches or more below the river bottom.

# 3.3 Socioeconomic Analysis and Land Use

## 3.3.1 Introduction

This section summarizes socioeconomic and land use resources and potential impacts to these resources within the project area associated with the proposed build alternative in comparison to the no-build alternative. Areas of analysis include social and demographic environment, land use and planned development, local and regional economy, community facilities and services, transit routes, pedestrian and bicycle travel, and mitigation measures.

**Detailed information on the minority, low-income, and other underserved populations analyses are presented in:**

- *SR 0083-094 John Harris Memorial (South) Bridge Environmental Justice Analysis* (August 2023)

## 3.3.2 Social and Demographic Environment

### Affected Environment

The study area includes all or parts of three census tracts, five block groups, and two counties (see **Figure 3-5**). Demographic data was collected from the U.S. Census American Community Survey (ACS) for these census tracts and block groups to understand the composition of the study area.

**Figure 3-5. Project Study Area Census Block Groups**

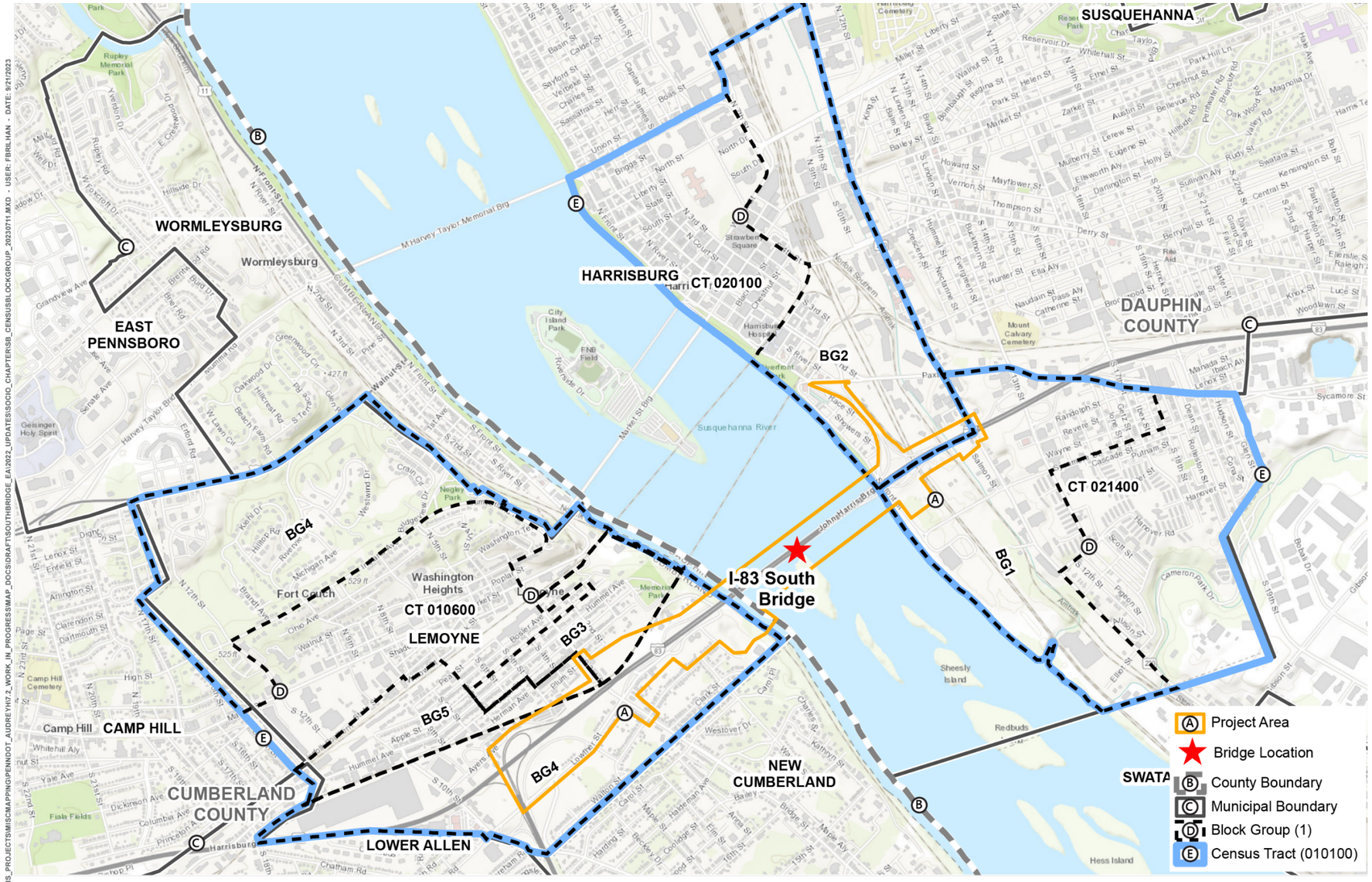

The characteristics of the communities in the study area are summarized in **Table 3-5**.

**Table 3-5. Demographic Summary**

| Geography | Minority Population[a] (%) | Below Poverty (%) | LEP[b] (%) | Over 65 (%) | Disabled (%) | Female Households with Children (%) | Zero Vehicle Households (%) |
|---|---|---|---|---|---|---|---|
| **Dauphin County** | **36.3** | **11.9** | **5.8** | **16.9** | **14.6** | **13.1** | **9.1** |
| Tract 021400 Block Group 1 | 92.3[c] | 42.5[c] | 13.6[c] | 9.9 | 25.2[c] | 32.7[c] | 2.2 |
| Tract 020100 Block Group 2 | 41.1[c] | 13.1[d] | 4.3 | 14.5 | 30.3[c] | 17.1[c] | 24.6[c] |
| **Cumberland County** | **16.1** | **6.9** | **2.9** | **18.3** | **14.7** | **8.6** | **5.1** |
| Tract 010600 Block Group 3 | 1.2 | 4.6 | 0.0 | 7.3 | 28.8[c] | 30.4[c] | 2.4 |
| Tract 010600 Block Group 4 | 3.5 | 0.0 | 6.7[c] | 18.5[d] | 6.8 | 0.0 | 0.0 |
| Tract 010600 Block Group 5 | 17.9[d] | 7.1[d] | 0.0 | 10.8 | 6.1 | 0.0 | 11.1[c] |

Source: U.S. Census Bureau, 2017-2021 ACS 5-Year Estimates
Notes: LEP = Limited English Proficiency
[a] The racial and ethnic categories provided are further defined as: White (White alone, not Hispanic or Latino); Black (Black or African American alone, not Hispanic or Latino); Asian (Asian alone, not Hispanic or Latino); Other (American Indian and Alaska Native alone, not Hispanic or Latino; Native Hawaiian and Other Pacific Islander alone, not Hispanic or Latino; Some other race alone, not Hispanic or Latino; and Two or more races, not Hispanic or Latino); and Hispanic (Hispanic or Latino; Persons of Hispanic origin may be of any race).
[b] Population aged 5 years and over
[c] Red Blocks = Value is meaningfully greater than county average
[d] Tan Blocks = Value while greater than county average, is not meaningfully greater

Additional information about low-income and minority status is described in **Section 3.13**, Environmental Justice.

***Minority***

Of the five census block groups in the study area, Tract 021400 Block Group 1, and Tract 020100 Block Group 2 have minority populations meaningfully greater than their respective county averages (**Table 3-5**). These two block groups are located in Dauphin County on the eastern side of the study area. Tract 010600 Block Group 5 has a minority population just slightly higher than the county average. This block group is located near the western project terminus on the north side of I-83 and the Norfolk Southern railroad. For additional information on minority status, please see **Section 3.13**, Environmental Justice, or the *SR 0083-094 John Harris Memorial (South) Bridge Environmental Justice Analysis* report (August 2023).

***Low Income***

One of the five census block groups (Tract 021400 Block Group 1) in the study area has a higher percentage of people living in poverty compared to its respective county average (**Table 3-5**). This block group is located in Dauphin County on the eastern side of the study area south of I-83. Two other block groups (Tract 020100 Block Group 2 on the east shore, and 010600 Block Group 5 on the west shore) have poverty rates just slightly above their county averages. For additional information on low income status, please see **Section 3.13**, Environmental Justice, or the *SR 0083-094 John Harris Memorial (South) Bridge Environmental Justice Analysis* report (August 2023).

***Limited English Proficiency***

Individuals with Limited English Proficiency (LEP) are those that have a limited ability to read, write, speak, or understand the English language. For the purposes of this analysis, LEP persons include those who speak the English language "not well" or "not at all" as classified by the U.S. Census. The ability to speak English is based on self-reporting or an answer given by another member of the household. Two of the five census block groups (Tract 021400 Block Group 1 on the east shore, and Tract 010600 Block Group 4 on the west shore) within the study area have a higher percentage of LEP households than their respective county averages (see **Table 3-5**).

***Age***

The Age Discrimination Act of 1975 prohibits discrimination on the basis of age (persons aged 64 and older). One census block group (Tract 010600 Block Group 4 on the east shore) within the study area has a senior population approximately equal to its county average (see **Table 3-5**).

***Disabled***

The ADA of 1990, along with the ADA Amendments Act of 2008, prohibit discrimination on the basis of disabilities. Both census block groups (Tract 021400 Block Group 1 and Tract 020100 Block Group 2) in Dauphin County, and one in Cumberland County (Tract 010600 Block Group 3) within the study area have disabled populations aged 18 and older that are greater than their respective county average (see **Table 3-5**).

***Female Householder with Children***

Female householders (i.e., without a spouse present) with related children under the age of 18 tend to have lower incomes and are considered in this analysis as a traditionally underserved population. Both census block groups in Dauphin County (Tract 021400 Block Group 1 and Tract 020100 Block Group 2) and one in Cumberland County (Tract 010600 Block Group 3) within the study area have female householders with children present at rates greater than the respective county averages (see **Table 3-5**).

***Vehicle Access***

Households without access to a personal vehicle are considered in this analysis as a traditionally underserved population. Zero-vehicle households are those without direct ownership of an automobile and tend to be highly transit-dependent or walk/bicycle-dependent. The distribution of

zero-vehicle households typically mirrors the distribution of low-income persons. However, some exceptions occur, such as people who may choose to walk, bicycle, or use transit. One census block group in Dauphin County (Tract 020100 Block Group 2) and one in Cumberland County (Tract 010600 Block Group 5) within the study area have a higher percentage of zero-vehicle households than their respective county averages (see **Table 3-5**).

***Other Special Populations***

A homeless encampment is located on the east shore under the existing South Bridge and associated ramp structures and on property southeast of the bridge that PennDOT plans to use as a staging area for construction of the project. According to the Capital Area Coalition on Homelessness (CACH), this encampment, known as "Tent City," is home to over 70 individuals as of July 2023. These residents are in several different clusters. The encampment has two Porta-Johns at the primary entrance and two garbage cans. During the warmer months, a spigot is attached to a fire hydrant to provide potable water.

Dauphin County Crisis Intervention Services and the CACH, along with a coalition of outreach service providers, support this community with services including but not limited to the following:

- University of Pittsburgh Medical Center nurses provide healthcare screenings, medication assistance, and insurance assistance;
- PATH and Crisis Outreach provide mental health services;
- Salvation Army food boxes are distributed by the Bethesda Mobile Mission;
- Several providers distribute clothes from donations;
- HELP Ministries conducts outreach for coordinated entry into housing programs, SNAP, and other mainstream benefits (e.g., unemployment, identification, and disability income);
- YWCA of Greater Harrisburg provides Veterans Homeless Services;
- Valley Youth House provides homeless youth services; and
- Dauphin County Mobile Library Van (Marco Polo Mobile) provides Wi-Fi hotspot, cell charging, books, laptop stations, and toiletries and sanitizing supplies.

The Veterans Outreach of Pennsylvania (veteransoutreachofpa.org) broke ground in Spring of 2023 for a Community of Tiny Homes for Homeless Veterans in Phoenix Park approximately one half mile south of the current homeless encampment. The community will include 15 tiny homes and a community center that will provide meals and therapeutic services to support veterans moving from transitional to permanent housing. It is anticipated that some of the veterans living in the homeless encampment would be qualified to move into this facility.

The underserved communities identified with the Climate and Economic Justice Screening Tool (CEJST) are shown on **Figure 3-6**. Description of the CEJST is included in **Section 3.13**, Environmental Justice. Block Group 1 in census tract 021400 is identified as a disadvantaged community based on exceedances in the categories of energy, health, pollution, and workforce. No other block groups in the project area are designated as disadvantaged communities.

No other special populations have been identified.

## Environmental Consequences

***No-build Alternative***

The no-build alternative is not anticipated to affect the social and demographic environment. Without replacement, the bridge structure and viaduct would continue to deteriorate and would eventually be at risk for full or partial failure. Should the bridge no longer be safe for travel, or portions of the bridge fall, the social and demographic environment surrounding the bridge would be substantially impacted.

***Build Alternative***

The proposed project would benefit motorists and non-motorists in the study area. The project would add bridge capacity, which would result in reduced congestion and better traffic flow on the I-83 corridor in the study area. Reduced congestion would improve transit reliability for routes that use the bridge, interchanges, and viaduct. Pedestrian and bicycle mobility would be improved on S. 3rd Street in Lemoyne due to wider sidewalks and a wider shoulder separating the sidewalk from travel lanes. This would benefit individuals who live on the west shore and rely on bicycling or walking as well as individuals (such as elderly and disabled populations) who may have mobility issues. The project is expected to improve walking and biking conditions on the eastern side of the Susquehanna River as the project will include improvements to the Greenbelt Trail with the addition of a parking lot, lighting, and other improvements.

The project may impact a community of homeless persons located on the east shore in the South Bridge vicinity. The encampment is located under the bridge and associated ramp structures and on property southeast of the bridge that PennDOT plans to use as a staging area for construction of the project. Through coordination with CACH a combination of the City of Harrisburg, Dauphin County, and CACH will assist with information dissemination and services to ease effects to the homeless encampment. The specific types of services to be provided would be determined by CACH in conjunction with the City of Harrisburg, Dauphin County, and PennDOT.

Additional information about the effects on minority, low-income, and other underserved populations can be found in **Section 3.13**, Environmental Justice, or the *SR 0083-094 John Harris Memorial (South) Bridge Environmental Justice Analysis* report (August 2023).

**Figure 3-6. CJEST Underserved Communities**

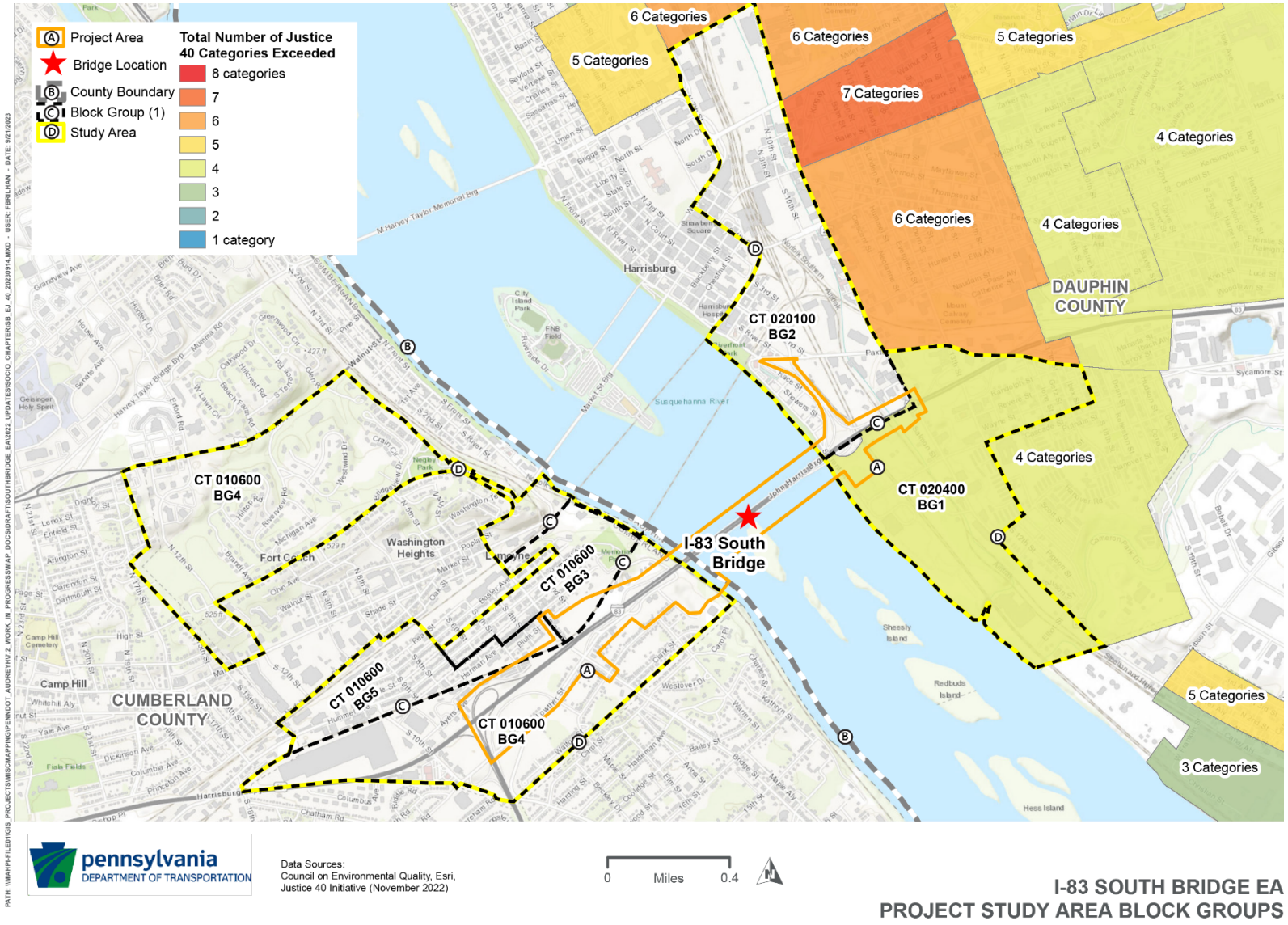

## 3.3.3 Land Use and Planned Development

### Affected Environment

***Existing Land Use***

Local land use plans and zoning designations were reviewed to understand the existing and future land use near the proposed improvements. The local comprehensive plan generally focuses on land use and transportation improvements that support future development. Based on Geographic Information Systems (GIS) data from Dauphin and Cumberland Counties, most of the study area is road right-of-way or water. Land use within the study area is shown on **Figure 3-7** and **Table 3-6**.

**Table 3-6. Study Area Land Use**

| Land Use | Acres |
|---|---|
| Apartments | 0.28 |
| Automotive Oriented | 0.84 |
| Commercial | 32.63 |
| Easement | 0.55 |
| Exempt | 0.79 |
| Food and Beverage | 1.40 |
| Industrial | 0.02 |
| Infrastructure/Utilities | 0.02 |
| Institutional/Special Purpose | 9.72 |
| Miscellaneous | 1.87 |
| Miscellaneous Storage | 0.15 |
| Multi-Purpose | 0.32 |
| Rail | 5.91 |
| Residential Living Oriented | 9.93 |
| Road Right of Way | 65.72 |
| Unknown | 5.84 |
| Vacant land | 8.84 |
| Water | 47.70 |

Source: Cumberland County n.d., 2020; Dauphin County 2020

**Figure 3-7. Study Area Land Use**

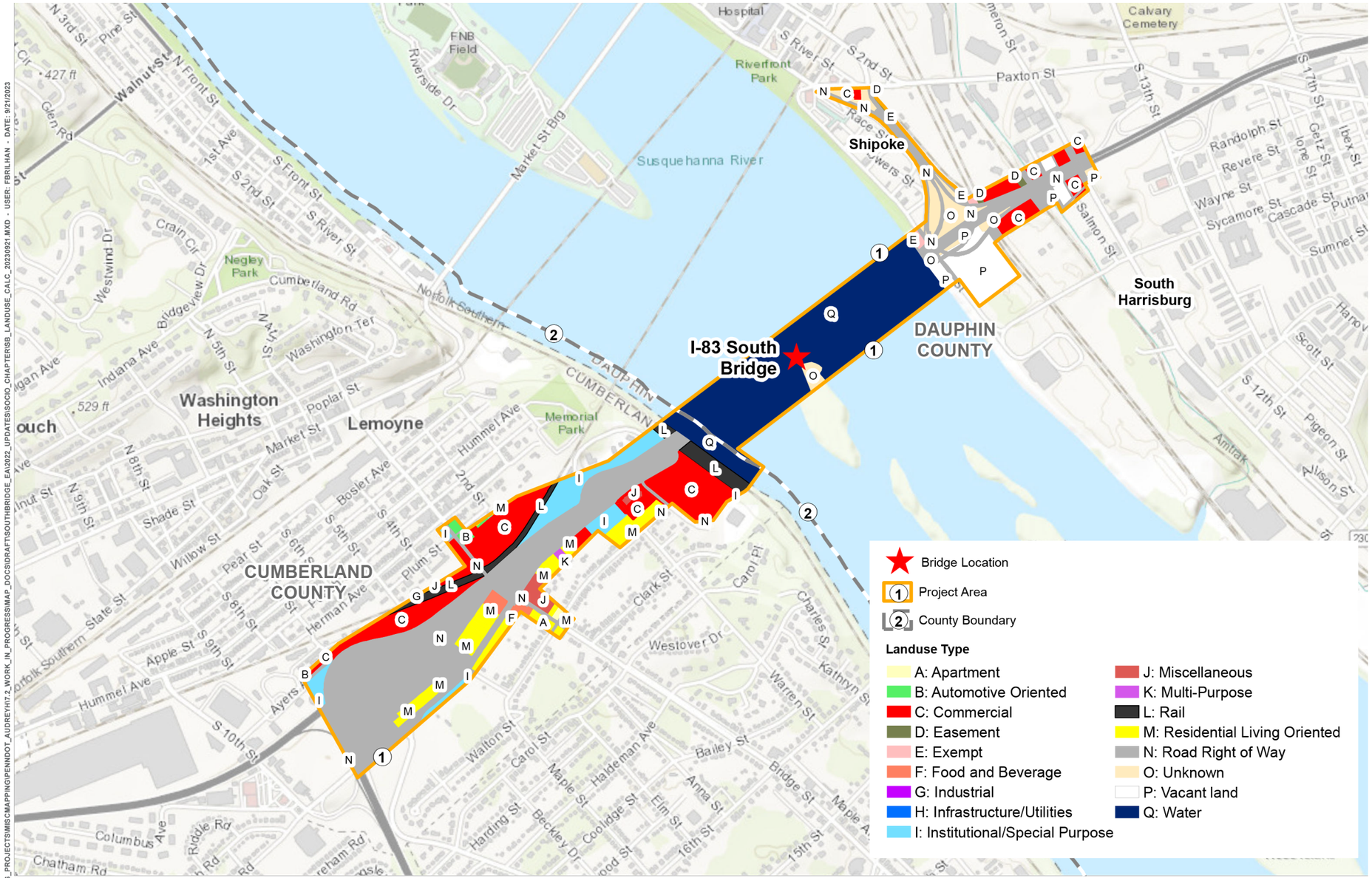

Based on Cumberland County (n.d., 2020) and Dauphin County (2020) GIS data, most of the study area is zoned for industrial, open space recreation, commercial general, or suburban residential (see **Table 3-7**).

**Table 3-7. Study Area Zoning**

| Zoning | Acres |
|---|---|
| ***Cumberland County*** | -- |
| Commercial General | 36.41 |
| Industrial | 12.92 |
| Office | 16.57 |
| Suburban Residential | 36.40 |
| Urban Residential | 0.76 |
| Village Mixed Use | 8.96 |
| ***Dauphin County*** | **--** |
| Industrial | 12.73 |
| Open Space Recreation | 58.41 |
| Residential Medium-Density | 0.16 |
| Riverfront | 7.57 |
| Commercial Neighborhood | 1.65 |

Source: Cumberland County n.d., 2020; Dauphin County 2020

### *Planned Improvements*

The *Imagine West Shore Joint Comprehensive Plan*[23] (short title: *Imagine West Shore*) identifies ways to revitalize Camp Hill, Lemoyne, and Wormleysburg. The plan's intent was to build upon and protect existing development and land use forms and patterns as well as protect and enhance important and unique human-made and natural features. The plan calls for future land uses in the area to be P/SP (Public/Semi Public), DT (Downtown), R (Residential), CR (Commercial/Retail), and CS (Commercial/Services).

The *Draft City of Harrisburg 2020 Comprehensive Plan*[24] identifies future community development goals and objectives for the City of Harrisburg. This plan calls for the downtown area to create a high-quality, business-commercial environment. The plan recommends the Paxton Creek Corridor be revitalized and made into the Paxton Creek Greenway, an environmental and recreational amenity. Future land uses in the South Harrisburg area are a mixture, including residential, commercial, industrial, open space, and riverfront.

The *2023–2026 Transportation Improvement Program*[25] (TIP) includes the following notable programmed improvements in or near the project:

[23] https://www.lemoynepa.com/community-development-parks-recreation-committee/pages/2009-imagine-west-shore
[24] https://harrisburgpa.gov/comprehensive-plan/
[25] https://www.tcrpc-pa.org/hats-traffic-improvement-program

- **Cameron Street Improvements –** Intersection improvements at Cameron Street/Maclay Street/Arsenal Boulevard and signal improvements along the Cameron Street corridor
- **Capital Gateway Improvements –** Bicycle/pedestrian improvements along Forster Street from Susquehanna River to 2nd Street
- **Derry Street Safety Improvements –** Safety improvements along Derry Street from 13th to 40th Streets
- **I-83 East Shore Section 2 –** Widening of I-83 to provide additional travel lanes in each direction between the Union Deposit Interchange and 29th Street. It includes the reconstruction of the Eisenhower Interchange and portions of U.S. Route (US) 322, I-283, and Eisenhower Boulevard. It includes new local access to Derry Street and a new interchange that will connect I-83 to Paxton Street in the Harrisburg Mall area (see the I-83 Beltway Projects website[26] for more information)
- **I-83 East Shore Section 3 –** Widening of I-83 to provide additional travel lanes in each direction between the Eisenhower Interchange near 29th Street and the 13th Street interchange at Cameron Street; includes improved multimodal network connectivity (see the I-83 Beltway Projects website[26] for more information)
- **Lemoyne Bottleneck Improvements –** Bicycle, pedestrian, and safety improvements on Market Street, from Bosler Avenue to Front Street
- **Maclay Street Bridge –** Bridge replacement over the Norfolk Southern Railroad
- **Market Street Bridge –** Bridge rehabilitation over the Susquehanna River

Additional land development projects planned for the foreseeable future are included in **Section 3.12**, Cumulative Effects.

***Community Cohesion***

Five neighborhoods were identified in the study area, including the entirety of the Lemoyne Borough, as well as the Shipoke, Downtown Harrisburg, Paxton Creek Corridor, and South Harrisburg neighborhoods of Harrisburg. Lemoyne is a 1.61-square-mile community just west of the City of Harrisburg. Incorporated in 1905, Lemoyne has a mix of land uses. Originally developed in the 1700s, Shipoke is one of the oldest sections of Harrisburg. Due to its riverfront location, this area has been substantially damaged by severe storms and flooding. Shipoke is mostly residential, with a small amount of other land uses, and is part of Downtown Harrisburg. Downtown Harrisburg is the City's Central Business District and serves as the region's administrative, cultural, and economic center. Downtown also includes several residential areas. The study area includes the southern portion of the Paxton Creek Corridor. The portion of the corridor in the study area is largely commercial and industrial in nature. There are plans to develop the Paxton Creek Park Central area (near Cameron Street) as a transit-oriented development.[27] In recent years, the area of South Harrisburg is mostly residential, with some industrial and

[26] http://i-83beltway.com/projects/
[27] PennDOT. 2018. *Paxton Creek Master Plan*. February 2018. 02.21.18_Paxton_Creek_Master_Plan.pdf (paxtoncreek.org)

commercial areas. The area contains large amounts of undeveloped green spaces and has good park and trail access, particularly the Greenbelt Trail.

## Environmental Consequences

### *No-build Alternative*

The no-build alternative would have no impact on community planning and land use. Without replacement, the bridge and viaduct structure would continue to deteriorate and would eventually be at risk for full or partial failure. Should the bridge and viaduct no longer be safe for travel, or portions of the bridge fall, community cohesion between the eastern and western sides of the bridge would be substantially affected due to the lack of direct access. The S. 3rd Street bridge in Lemoyne would not be replaced; therefore, improvements would not be made for pedestrians and bicycle traffic. The no-build alternative would also have a negative effect on the ability to implement local land use and transportation plans.

### *Build Alternative*

*Land Use and Planned Improvements*

The proposed project appears to be consistent with adopted plans. The project has the potential to support redevelopment in the project area as mobility improves. Much of the land in the area is already developed, but the redevelopment of vacant or underutilized parcels could occur. The project would be consistent with the *Imagine West Shore* plan and *City of Harrisburg Comprehensive Plan*. The project would convert land from its existing use to road right-of-way.

The project would not have a negative effect on planned transportation improvements in the area because the project does not preclude these improvements. Bicycle, pedestrian, and safety improvements are already programmed for the Lemoyne Bottleneck and Capital Gateway. This project, together with the I-83 East Shore projects Sections 1 (constructed), 2 (in final design), and 3 (in final design), implements the majority of the *I-83 Master Plan*. None of the other projects noted as programmed improvements would be affected by construction of the I-83 South Bridge Project.

*Community Cohesion*

Because the project largely follows existing roads, except for the reconfiguration of the Lemoyne interchange and realignment of Lowther Street, impacts to the existing neighborhoods are minimized. The project is located at the edges of the Shipoke, Downtown Harrisburg, Paxton Creek Corridor, and South Harrisburg neighborhoods on the east shore. Impacts to these neighborhoods are expected to be minimal as no households or businesses would be relocated as part of the I-83 South Bridge Project. In Lemoyne, the I-83 southbound off ramp would have a new terminus on the northern side of the S. 3rd Street Bridge, rather than the southern side of the bridge, but access into Lemoyne would not substantially be changed. Lowther Street, east of S. 3rd Street, would be shifted to the south, and access to businesses along the street may change slightly but would be maintained, as would access to the Lemoyne Borough Wastewater Treatment

Plant. The project would improve connections between the portions of Lemoyne that are north and south of I-83 by widening the S. 3rd Street Bridge and providing 5-foot shoulders and 5-foot sidewalks to support non-motorized mobility and accessibility. Overall, the I-83 South Bridge Project is not anticipated to have a substantial impact on community cohesion.

*Relocations and Displacements*

Based on the preliminary design plans, the build alternative is expected to impact approximately 36 parcels. Of these, 22 parcels would require only a temporary construction easement or aerial easement. On another 13 of the parcels, most of the impacts would be minor and would require only a partial acquisition of land. One undeveloped parcel, not containing any structures would be a total acquisition.

The parking lot for the Internists of Central PA (108 Lowther Street) would be reconfigured on a parcel located adjacent to its current location within the project area. The proposed I-83 southbound exit ramp in Lemoyne (Ramp X), would impact four buildings/structures on one parcel north of the S. 3rd Street intersection. At this time, it is believed that only a partial acquisition of this parcel is necessary, and the business (a recycling and salvage operation) may not need to be relocated as a part of the acquisition. Access to the parcel would be maintained and the property owner could choose to keep the remaining parcel or sell it privately to a different owner. However, if the remaining parcel is not sufficient for the business to remain viable, a total acquisition of this parcel may be necessary. If a total acquisition of this parcel is necessary, it is possible that PennDOT would have to acquire an adjacent parcel outside of the project area because both parcels are used by the same business.

Access to one business located on the eastern end of Lowther Street would change. As access would be maintained, this is expected to be a minor impact.

One property south of the East Shore Viaduct and west of Cameron Street (the former Mark Cleaners property) would have been acquired for the South Bridge construction; however, acquisition of this property was already carried out as part of the ESS3 Project, construction Section 1 right-of-way process, to accommodate a utility relocation. As a result, this acquisition is not counted as an effect for the I-83 South Bridge Project.

The property to the north of the viaduct and west of Cameron Street (the former Berkleys Garage) would require temporary construction easements, which would be in place for several construction seasons and would alter access to the property. While permanent acquisition is not anticipated to be required, the change in access and the length of the construction easement may be an issue for the property owner. If the temporary construction easement renders the parcel insufficient for the business to remain viable, a total acquisition of this parcel may be necessary.

The I-83 South Bridge Project would require the displacement of several billboards.

All property acquisition would be conducted in accordance with the Uniform Relocation Assistance and Real Property Acquisitions Policies Act of 1970, as amended; Title VI of the Civil Rights Act of 1964; and the Pennsylvania Eminent Domain Code of 1964.

The project would also impact a homeless encampment located on the east shore near the South Bridge. For additional information about impacts to this population, see **Section 3.3.2**, Social and Demographic Environment, and **Section 3.13**, Environmental Justice.

## 3.3.4 Local and Regional Economy

### Affected Environment

Employment is located throughout the project area. Businesses in or near the project area (see **Figure 3-8**) include:

- Macy Holdings[28]
- Internists of Central PA
- CubeSmart Self Storage
- BCR Music & Sound
- Keiser's Auto Body
- JVH Excavating
- KFC
- Burger King
- Turkey Hill Minit Mart
- Car Wash[29]
- Elite Vinyl Railings
- Pennsy Supply
- PennDOT Driver & Vehicle Services
- UPMC
- Case Management Unit
- Freight-Land-Sky
- Dobson Property Sales and Rentals
- Los Tres Cubanos
- Premier Eye Care Group
- Quality Inn Riverfront

[28] This is a recycling and salvage business (https://www.pennlive.com/business-news/2016/03/trade_talk_206.html).
[29] Coldwater-LeMoyne Car Wash is the name listed in the property record.

**Figure 3-8. Local and Regional Economy**

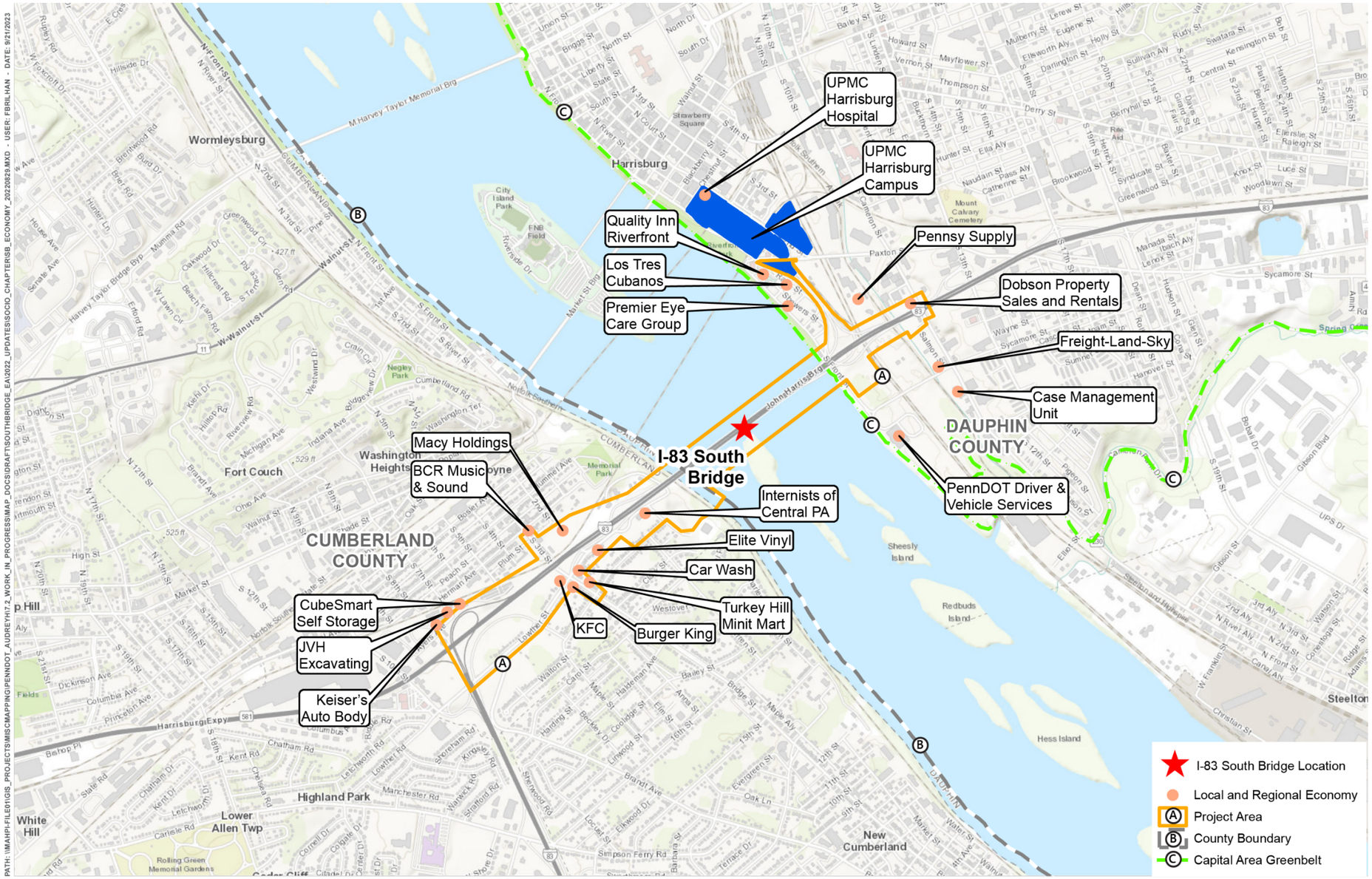

According to the U.S. Census (2021), the employment rate in Lemoyne Borough is 71 percent compared to 60 percent for Pennsylvania overall. Approximately 2,146 full-time civilian employed persons (over the age of 16) reside in Lemoyne Borough. According to the U.S. Census (2021), the top categories in the borough are educational services, health care, and social assistance; professional, scientific, and technical services; administrative and support waste management services; and manufacturing.

The top occupations in Census Tract 020100, which includes the Shipoke neighborhood along with the portions of Downtown Harrisburg and the Paxton Creek Corridor neighborhoods in the study area, are professional, scientific, and technical services; administrative and support waste management services; and educational services, health care, and social assistance. The top occupations in the South Harrisburg area (Census Tract 021400) are educational services, health care, and social assistance and public administration.

## Environmental Consequences

***No-build Alternative***

The no-build alternative is not anticipated to affect the local and regional economy. Without replacement, the bridge and viaduct structure would continue to deteriorate and would eventually be at risk for full or partial failure. Should the bridge and viaduct no longer be safe for travel, or portions of the bridge fall, there would be long-term effects on the local and regional economy as it would negatively affect access to employment, access to businesses, and movement of goods. Emergency repairs, if conducted, would also divert funding from other projects.

***Build Alternative***

The I-83 South Bridge Project is not expected to have an adverse effect on the local and regional economy. The project has the potential to influence the location of new development as mobility improves. New development could benefit the tax base (e.g., property, earned income, hotel, and personal taxes) and provide additional economic opportunities. These are expected to be minor but long term.

The project is likely to result in a minor loss of property tax revenue for Cumberland County, Lemoyne Borough, West Shore School District, and Harrisburg School District as land acquired for the project would no longer be subject to local property taxes. It is unknown if the additional property tax generated by potential new development is sufficient to off-set this loss of property tax.

Based on the preliminary design plans, no business or residential relocations are anticipated to be needed for construction of the project. However, the proposed I-83 southbound ramp (Ramp X) of the Lemoyne interchange would cross a recycling and salvage business and require four buildings/structures on the parcel to be removed. The parcel is fairly large, and the business may still be viable using the remaining property. Should it be determined during final design and right-of-way acquisition that the business needs to relocate, it is likely that it would move out of

Lemoyne Borough due to the lack of available parcels of a similar size in the borough and good highway access. For the property north of the viaduct and west of Cameron Street on the east shore, a temporary construction easement would be needed, and access to the parcel would be changed during construction; however, the business may remain operable. Access to the Lemoyne Borough Wastewater Treatment Plant and local businesses along Lowther Street would change slightly due to the realignment of Lowther Street; however, access to all would be maintained without routing traffic through the adjacent residential neighborhood on Walton Street. The parking area for the Internists of Central PA property would be reconfigured.

During construction, construction contractors would be hired, resulting in a temporary increase in regional economic activity. On-site construction workers are likely to visit local businesses and restaurants. Construction is anticipated to last approximately 6 to 8 years. As a result, construction activity is likely to have a short-term, beneficial impact on the local and regional economy.

### 3.3.5 Community Facilities and Services

#### Affected Environment

The Harrisburg Bureau of Fire provides fire service to the eastern side of the study area, while the West Shore Bureau of Fire provides fire services to the western side. The Harrisburg Police Department provides police services on the eastern side of the study area, while the West Shore Regional Police Department provides police services on the western side. Emergency medical services (EMS) are provided by multiple organizations, including the University of Pittsburgh Medical Center (UPMC) Community Life Team, Penn State Health Life Lion EMS, and West Shore EMS. Harrisburg River Rescue and Emergency Services provides volunteer river rescue services throughout Dauphin County, including the Susquehanna River. The New Cumberland River Rescue supports water-based rescue and emergency services to Cumberland, York, and Dauphin Counties. Other providers may provide services in the study area through mutual aid agreements.

No school buildings are located within the immediate study area. Students on the western side of the Susquehanna River are served by the West Shore School District. These students are within the Washington Heights Elementary School, New Cumberland Middle School, and Cedar Cliff High School catchment areas. Students on the eastern side of the Susquehanna River are served by the Harrisburg School District. They attend a variety of schools, including Foose Elementary, Harrisburg High School, and the Harrisburg Virtual Learning Academy. Other schools near the project area include Saint Theresa School and Highland Elementary School.

Recreational resources within or immediately adjacent to the study area include Lemoyne Memorial Park, Lemoyne Swimming Pool, Maple Street Park, Shipoke Playground, Riverfront Park, and the Cedar Cliff Soccer and Softball complex. The Greenbelt Trail is a part of the historic Harrisburg City Parks 7 Parkway Plan. It is a 20-mile loop trail with on-road and dedicated paths for bicycle, pedestrian, and non-motorized activities. The Susquehanna River is a designated water trail and is recognized by the National Park Service as a National Recreation Trail. The water trail

is discontinuous through the project area due to proximity to the Dock Street Dam. Boating is not allowed below City Island to the Dock Street Dam. Fishing occurs by boat and from the shore north and south of the project limits; therefore, no adverse effects are anticipated. Fishing from the shore in the immediate vicinity of the bridge would be restricted during construction; however adequate alternative fishing areas are available.

There are no places of worship within the immediate study area. However, there are several in the project vicinity, including Grace United Methodist Church; First Christian Church; Trinity Evangelical Lutheran; Redeemer Community Church; The Church of Pentecost USA, Inc.; Saint Theresa Church; the Historic Grace United Methodist Church; and From the Heart Church Ministry.

Other community facilities and services within or immediately adjacent to the study area include Peace Chapel, Front Street Sewer Pumping Station, Lemoyne Borough Wastewater Treatment Plant, PennDOT Driver and Vehicle Services, and UPMC Harrisburg. Community facilities and services are shown on **Figure 3-9.**

**Figure 3-9. Study Area Community Facilities and Services**

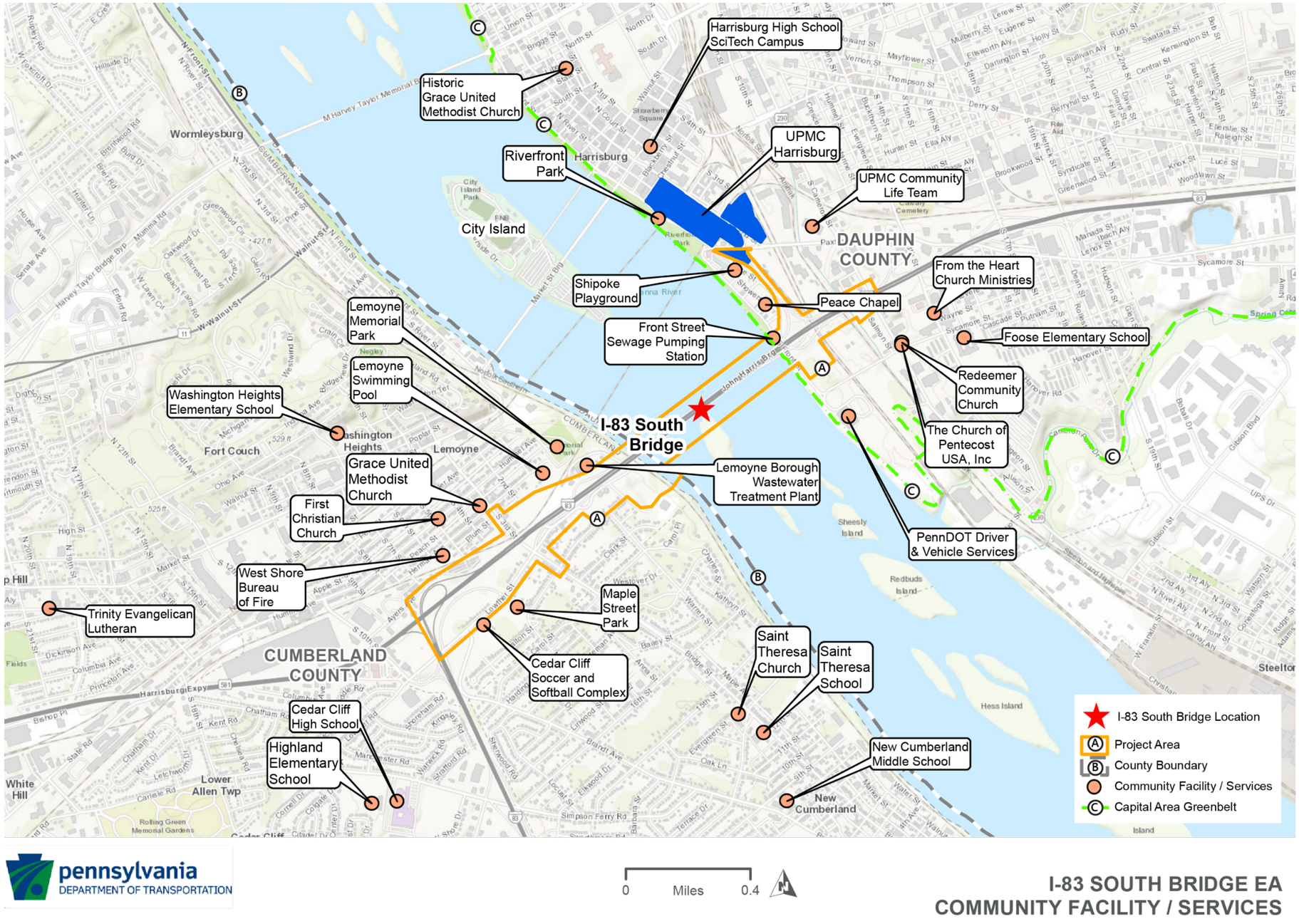

## Environmental Consequences

***No-build Alternative***

The no-build alternative would not have a substantial impact on community facilities and services. Without replacement, the bridge structure and viaduct would continue to deteriorate and would eventually be at risk for full or partial failure. Should the bridge and viaduct no longer be safe for travel, or portions of the bridge fall, community facilities and services would be substantially affected.

***Build Alternative***

Overall, the project is not expected to have substantial negative impacts on emergency services providers. The proposed improvements are likely to result in quicker response times and provide easier access to incidents because of added capacity on the bridge. To address temporary impacts to the Harrisburg River Rescue emergency boat launch, a temporary boat launch would be provided during construction and permanent launch area post-construction.

No direct adverse effects on the West Shore School District or Harrisburg School District would occur because the schools are located outside the immediate project study area. However, in Lemoyne, as the catchment areas for several local schools include areas on both sides of I-83, minor, short-term impacts to school bus routes may occur as occasional detours or lane restrictions may be needed for relatively short periods during the replacement of the S. 3rd Street Bridge and re-alignment of Lowther Street.

No direct impacts are anticipated to Maple Street Park, Shipoke Playground, Riverfront Park, and the Cedar Cliff Soccer and Softball complex; however, there could be minor impacts due to the change in traffic patterns during construction. The Greenbelt Trail would be temporarily affected by construction activity. The upper portion of the trail would be rerouted with a 12-foot multi-use path along Front Street, past the parking area, and a new ramp location to a merge point with the existing lower trail. The upper portion of the trail would remain open during construction. The lower trail would remain open when possible but would be temporarily closed during construction when needed. These impacts are expected to be minor, have been accounted for, and are being mitigated as part of the I-83 South Bridge Project.

The construction of the South Bridge, northbound 2nd Street exit ramp, and the viaduct would require building a temporary construction causeway into the Susquehanna River, which could affect up to 29 trees, some of which were planted through Capital Area Greenbelt Association (CAGA) efforts. Nine of these 29 trees were identified as having a memorial plaque associated with their planting. Efforts would be made during final design to minimize the effects on the memorial tree area, and coordination would be undertaken with CAGA to remove and store the memorial plaques, then plant replacement trees and re-install the plaques post construction. For additional information about memorial trees, see **Section 3.11**, Section 4(f).

Construction activity may have a temporary effect on emergency service providers because construction activity and detours may increase response times.

## 3.3.6 Transit Systems

### Affected Environment

Cumberland-Dauphin-Harrisburg Transit Authority, also known as Capital Area Transit or CAT, is designated as the public transportation provider in the greater Harrisburg area. CAT operates a Fixed Route Bus Division and a Shared Ride/Paratransit Division, which includes shared-ride transportation at a discounted rate to persons over the age of 65 and an Americans with Disabilities Act (ADA) Complementary Service program, providing door-to-door service for qualified persons. Currently, 7 CAT fixed bus routes travel through the project area. Of these, three routes (CY, E, and M) cross the South Bridge, as shown in **Figure 3-10**. The shared ride and paratransit services currently travel through the study area and also use the South Bridge.

Commuter Services is a program of the non-profit Susquehanna Regional Transportation Partnership, which operates the Commute PA carpooling and vanpooling programs. These programs operate within the project area, using the South Bridge when it is the most efficient route.

Rabbittransit, is a regional public transportation provider that offers a variety of transportation services to the residents of Adams, Columbia, Cumberland, Dauphin, Franklin, Montour, Northumberland, Perry, Snyder, Union and York Counties. The RabbitEXPRESS is a commuter bus service that currently offers several trips per day during the work week to Harrisburg (Route 15N and Route 83N) as shown in **Figure 3-10**.

Other bus services, such as Trailways, Greyhound, and megabus, stop at stations in Harrisburg, and they currently use the South Bridge on certain routes.

**Figure 3-10. CAT and RabbitEXPRESS Transit Routes**

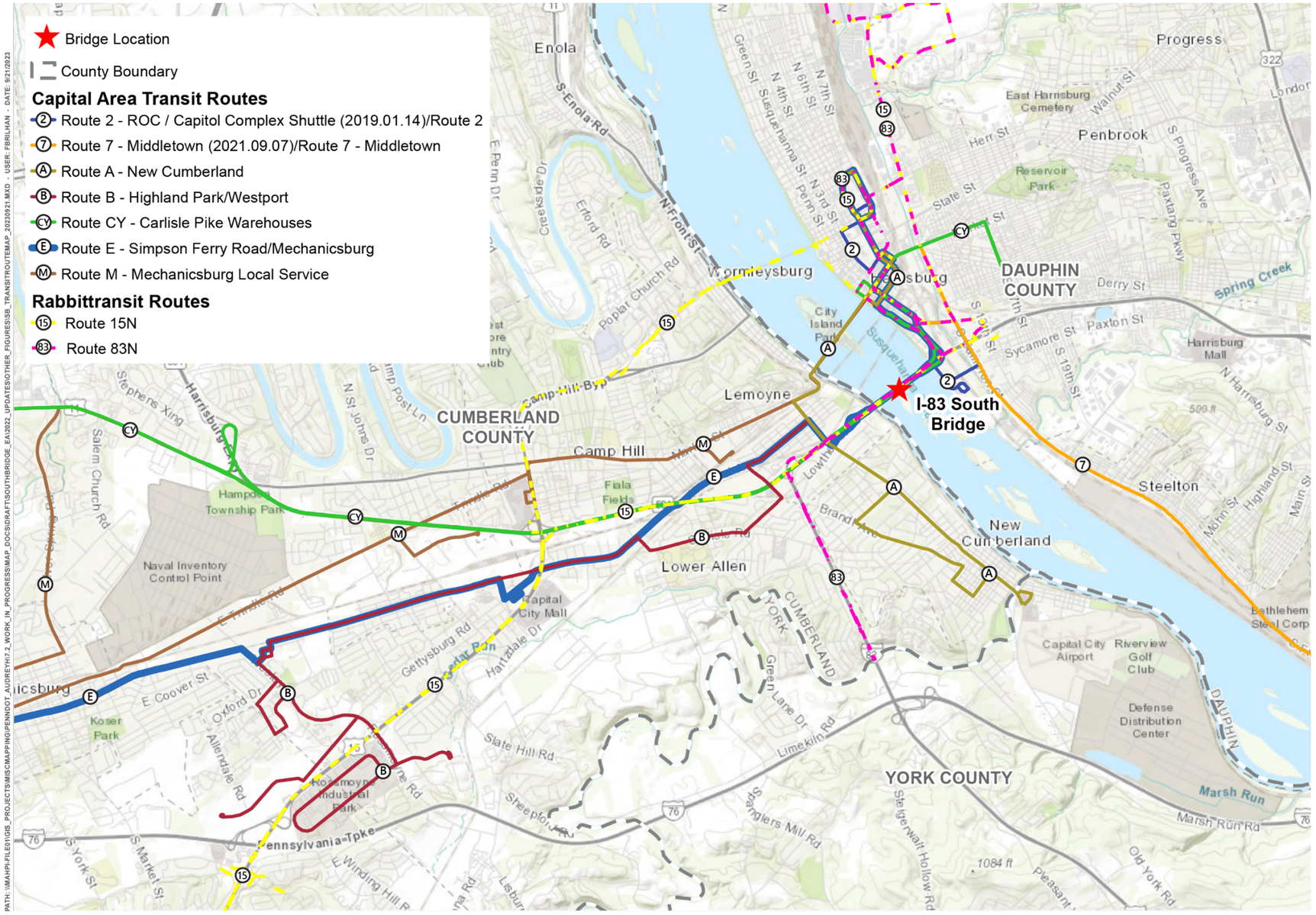

### Environmental Consequences

**No-build Alternative.** Under the no-build alternative, transit services in the study area would continue to use the South Bridge for fixed route bus and other transit services. Congestion on the existing South Bridge may continue to increase, requiring changes in transit service operations to accommodate delays. The South Bridge is approaching the end of its useful life. Without replacement, the bridge will need more frequent maintenance. Bridge maintenance activities may require periodic closure of one or multiple lanes of travel over the South Bridge, resulting in congestion and detours, which would impact transit services as they are forced to use alternate routes. Traffic increases along these alternate routes would result in decreased level of service (LOS), increased likelihood of crashes, and impacts to residents and transit system users. Such maintenance can only extend the service life of the bridge for so long before it is at risk of total failure. If the South Bridge were to fail, then transit service would have to be rerouted over an alternate bridge, resulting in longer travel times and reduced LOS for transit users.

**Build Alternative.** Transit operations that utilize the existing South Bridge will be minimally impacted during construction. Three lanes of traffic will be maintained in both directions during construction of the new structures by using the existing structure while building the replacement bridge south of the existing structure, then routing all traffic to these new lanes while the existing bridge is demolished and new southbound lanes are built where the existing bridge was. Once the new southbound lanes are complete, traffic would be redistributed to five travel lanes in each direction. This is an increase in capacity, which may increase the efficiency of transit operations over the new South Bridge.

To accommodate I-83's wider design, the S. 3rd Street Bridge in Lemoyne would need to be lengthened. The new bridge would be reconstructed immediately east of the existing bridge, allowing traffic to use the existing bridge during construction. Occasional detours or lane restrictions may be needed for relatively short periods of time as connections are made between the new bridge and the existing roadway network. Transit operations would be minimally affected during construction. Once the new bridge is in operation, transit operations are expected to increase in efficiency due to the added lanes and capacity on I-83 and the South Bridge.

## 3.3.7 Pedestrian and Bicycle Travel

### Affected Environment

No pedestrian and bicycle facilities exist on the current South Bridge and I-83. Pedestrians and bicycles are prohibited from using I-83 within the project area[30]. Two bridges present in the project vicinity provide pedestrian and bicycle connectivity to local communities on either side of the Susquehanna River. The Market Street Bridge has sidewalks in both travel directions and traffic signals at both ends that reduce motorist speeds substantially. Pennsylvania Bike Route J crosses

[30] https://www.penndot.pa.gov/TravelInPA/active-transportation/Pages/Bicycle-Safety-and-Pennsylvania-Laws.aspx#:~:text=whenever%20they%20ride.-,Freeways,%2C%20horses%2C%20signals%20or%20intersections

the Market Street Bridge, connecting a spur route from Lancaster to the main route that travels along North Front Street along the west shore. The Harvey Taylor Bridge has fully protected sidewalks in both travel directions.

The current configuration of the S. 3rd Street Bridge in Lemoyne has one northbound travel lane, two southbound travel lanes, narrow shoulders, and a separated sidewalk on the western side. Bicyclists must either travel on the roadway or share the separated sidewalk with pedestrians. This bridge provides a pedestrian and bicycle connection between the neighborhoods on either side of the Norfolk Southern Railroad and I-83. The next nearest pedestrian and bicycle crossing of I-83 is the S. 10th Street I-83 underpass, approximately 0.7 mile southwest of the S. 3rd Street Bridge. The main route of Pennsylvania Bike Route J crosses the S. 3rd Street Bridge.

Sidewalk facilities exist on nearly every road in the project area, except for I-83. Pedestrian and bicycling corridors in the project area include S. 3rd Street and Lowther Street, both of which have sidewalks; there are no dedicated bicycle lanes, and shoulders are narrow on both streets.

## Environmental Consequences

**No-build Alternative.** Pedestrian and bicycle facilities will not be directly affected by the no-build alternative. No facilities are located on the current South Bridge, and the current facilities in Lemoyne and the S. 3rd Street Bridge would remain as they exist today. However, increased maintenance closures or a failure of the South Bridge would result in vehicles having to travel along alternate routes to cross the Susquehanna River via other bridges, which means pedestrians and bicyclists may be affected by increased vehicular traffic along these routes. Increased congestion could increase hazards to bicyclists who use these routes. Pedestrians may experience longer wait times when they try to cross busy intersections.

**Build Alternative.** The replacement South Bridge would not include pedestrian or bicycle facilities. As with the no-build alternative, access would continue to be prohibited for pedestrians and bicyclists on the South Bridge and I-83. The Market Street and Harvey Taylor Bridges would continue to provide pedestrians and bicyclists routes to cross the river. During construction of the replacement S. 3rd Street Bridge in a location immediately east of the existing bridge, the existing S. 3rd Street Bridge would remain open for pedestrian and bicycle use. The replacement S. 3rd Street Bridge would provide improved bicycle and pedestrian facilities. The proposed design includes 5-foot-wide shoulders and 5-foot-wide sidewalks on both sides of the bridge, an improvement when compared to the no-build alternative, which has narrow shoulders and a separated sidewalk only on the western side of the bridge. These improvements would provide better facilities for bicyclists traveling on Pennsylvania Bike Route J. A sidewalk protective fence would be installed on both sides of the bridge. Sidewalks and intersection pedestrian crossings would be reconstructed and improved to ADA standards along S. 3rd Street and Lowther Street within the project area. A sidewalk would be constructed along the southern side of Lowther Street between S. 3rd Street and its terminus at the Lemoyne Borough wastewater facility on the northern side of I-83.

### 3.3.8 Temporary Construction Impacts

The construction of the project is expected to be completed in approximately 6 to 8 years. The construction of both the new South Bridge structures, the new S. 3rd Street Bridge, and the new viaduct from the eastern end of the South Bridge to Cameron Street would be staged to maintain travel lanes by constructing the new structures adjacent to the existing ones, then shifting traffic onto the new structures.

To access the temporary construction bridge from the west shore, construction vehicles would use relocated Lowther Street. Residences along Lowther Street would experience increased traffic from these vehicles during the phases of construction where access is from the west shore (see **Chapter 2** for construction phasing information). Access to construct the temporary construction bridges from the east shore would happen from the immediate vicinity of the existing bridge. This area is fairly flat. The Greenbelt Trail would be temporarily re-routed during construction. The upper portion of the trail would be rerouted with a 12-foot multi-use path along Front Street, past the parking area, and a new ramp location to a merge point with the existing lower trail. The upper portion of the trail would remain open during construction. The lower trail would remain open when possible but would be temporarily closed during construction when needed.

Warning signs, speed restrictions, detours, and work zone safety measures would be implemented during the construction period based on a Maintenance and Protection of Traffic Plan. While the existing number of travel lanes would generally be maintained during peak periods, traffic delays may increase due to reduced speeds, the presence of construction activities nearby, and temporary lane closures needed to make connections between the new bridge and existing roadway system or to shift traffic to the new facility. PennDOT will prepare a Traffic Management Plan to keep travelers, City of Harrisburg officials, and businesses informed of temporary detour routes, lane closures, and construction timing.

### 3.3.9 Mitigation

The following measures will be implemented to mitigate potential adverse effects on the socioeconomic environment and transportation and travel patterns:

- Coordinate with the City of Harrisburg, Dauphin County, and CACH regarding project schedule and services they can offer to assist in addressing the homeless encampment in the bridge construction staging area on the east shore
- Incorporate ADA-accessible sidewalks to improve safety and accessibility for non-motorized travelers where sidewalks are being incorporated or replaced on the west shore in Lemoyne
- Coordinate with CAT and Rabbittransit to reduce impacts to service during project construction
- Conduct full (one anticipated – undeveloped parcel, no structures) and partial property acquisitions in accordance with the Uniform Relocation Assistance and Real Property

Acquisitions Policies Act of 1970, as amended; Title VI of the Civil Rights Act of 1964; and the Pennsylvania Eminent Domain Code of 1964

- For the Greenbelt Trail and the memorial trees planted to the south of the bridge on the east shore of the river:
    - Coordinate with CAGA regarding the removal and storage of the memorial plaques prior to their removal
    - Plant replacement trees and work with CAGA to install the memorial plaques and update the on-site tree directory (if needed)
    - Develop an agreement for the City of Harrisburg to operate and maintain the improved parking area under the bridge
    - Install fencing to separate the multi-use path and parking
    - Include a barrier with architectural surface treatment to protect trail users along Front Street
    - Provide an automobile parking lot and construct a retaining wall with fencing along the existing abutment to support the proposed parking area
    - Provide landscape plantings, bike racks, repair station, kiosk, benches, and pedestrian-scale lighting
    - Reconstruct the Greenbelt ramp area at the southern side of the parking area
    - Use flaggers and temporary barriers to control use of the trail, as necessary during construction
    - Potentially provide a comfort station with restrooms and a drinking fountain (requires maintenance agreement with the City of Harrisburg)
- Stage construction of the new South Bridge structures, the new S. 3rd Street Bridge, and the viaduct from the eastern end of the South Bridge to Cameron Street to maintain travel lanes by constructing the new structures adjacent to the existing ones, then shifting traffic onto the new structures
- Temporarily re-route the Greenbelt Trail around the construction staging area on the east shore during construction; include improvements to the trail to offset effects on this recreational resource
- Install warning signs, speed restrictions, detours, and work zone safety measures during the construction period based on a Maintenance and Protection of Traffic Plan
- Develop a Traffic Management Plan, including coordination with:
    - Business owners to ensure they are aware of detours;
    - Emergency service providers regarding the potential for increased traffic incidents on detour routes during construction as well as during final design and construction to understand service routes and minimize the potential for service disruptions; and
    - West Shore and Harrisburg School Districts regarding temporary changes to school bus routes.

  - The plan will include effective approaches to communicate with environmental justice communities.

- Maintain access to the Susquehanna River for Harrisburg River Rescue and Emergency Services, both during and after construction

# 3.4 Visual Resources

## 3.4.1 Introduction/Methods

Highways and bridges can be highly visible facilities that affect the visual character of surrounding landscapes. This section describes the existing visual environment and discusses how the proposed project could alter the visual environment. Visual analysis includes views both from and of the project by the roadway (and bridge) users and viewers. Impacts are described as changes to the existing view.

Two major viewer groups are present: roadway and bridge users, and roadway and bridge viewers. The users include drivers, passengers, bicyclists, and pedestrians who view the immediate surroundings of road traffic and passing facilities in the foreground and the surrounding buildings or landscapes behind. Viewers are typically residents, businesses, pedestrians, and recreational users who may have more static views of the roadway and bridge and are more sensitive to changes in visual character or quality.

## 3.4.2 Affected Environment

At approximately 3,000 feet across, the Susquehanna River is relatively wide at the I-83 South Bridge crossing. Drivers and passengers crossing the river can look over the existing concrete jersey barriers and are afforded a natural vista of islands and vegetated banks of the river to the south. The extent of the view would depend on the traffic lane and height of vehicle. The Norfolk Southern Railroad line follows the western riverbank (see **Figure 3-11**). An island in the center of the channel just south of the existing bridge provides a prominent, undisturbed view of forests and wetlands. Additional islands (including Sheesly and Redbuds Islands) can be seen stretching southward through the center of the river channel (see **Figure 3-12** and **Figure 3-13**). The Pennsylvania Turnpike (I-76) Susquehanna River bridge, 10 miles downstream, is not visible through the vegetated island buffer. Approaching the ends of the bridge, highway signs and billboards begin to interrupt the natural vegetated views as the highway transitions into the industrial area around the east shore rail lines and the urban development of the City of Harrisburg.

**Figure 3-11. View to the South of the Susquehanna River; Rail Line Along Western Riverbank from I-83 South Bridge**




**Figure 3-12. View to the South of the Susquehanna River, Wetlands and Island, and Western Riverbank from the Middle of I-83 South Bridge**




**Figure 3-13. View Looking South from the South Bridge; Susquehanna River, Islands, and Eastern Riverbank Visible; PennDOT DMV Building Visible on East Shore (left side of photograph)**



Northern vistas include the Susquehanna River waters; the Norfolk Southern Rail Bridge with its repeating arches, sometimes mirrored in the river; Market Street Bridge arches just barely visible behind; the tree-lined developed waterfront in the Shipoke neighborhood; the open industrial development around the rail lines; and the Downtown Harrisburg buildings framing the skyline in front of the foothills of the Appalachian Mountains (see **Figure 3-14**, **Figure 3-15, Figure 3-16**, and **Figure 3-17**). Vegetation largely obscures the development on the Lemoyne (western) side of the river until the bridge is crossed.

The visual elements on the South Bridge include multiple paved traffic lanes bracketed on either side and in the median with concrete barriers. Views of the river and nearshore areas are most visible for the outer traffic lanes that abut the outer concrete barriers, especially the northbound lane as the existing shoulder has been reduced to provide space for the additional traffic lane.

**Figure 3-14. Northeast View of Norfolk Southern Rail Bridge, Downtown Harrisburg City Buildings, and Eastern Riverbank**



**Figure 3-15. View North of the South Bridge, Susquehanna River, Norfolk Southern Rail Bridge, Lemoyne, and Western Riverbank; City Island Visible Behind the Arched Piers of the Railroad and Market Street Bridges**




**Figure 3-16. Industrial Development East of Existing South Bridge, Viewed from Southbound Lanes of the Viaduct, Downtown Harrisburg Buildings Visible in Background**



**Figure 3-17. Industrial Development East of Existing South Bridge, Viewed from Northbound Lanes of the On Ramp to the Viaduct/I-83**




Views of the South Bridge are typically observed from the Greenbelt Trail along the east shore of the Susquehanna River, north of the bridge. The concrete piers are visible, as shown in **Figure 3-18**. The repeating forms are similar but not as distinct as the arches visible on the rail bridge to the north. The trail follows under the bridge pier and continues south, although a thin line of trees obscures full views of the bridge and river. These views would also be experienced by recreational river users who are headed to the Harrisburg shore to pull out of the river at least 200 feet upstream of the Dock Street Dam and portage along the Greenbelt Trail.

Views of the bridge approach and ramps from the Shipoke neighborhood are limited by the existing noise wall east of Race Street.

Travelers entering Lemoyne after crossing the river take I-83 South Exit 41B, which crosses under the highway and connects at a traffic signal at S. 3rd Street. Road users experience a retaining wall decorated with a long mural depicting the settlement and history of Lemoyne as the exit ramp ascends parallel to Lowther Street (see **Figure 3-19**).

**Figure 3-18. Existing South Bridge, Viewed from East Shore; Capital Area Greenbelt Trail along East Shore and Shipoke Neighborhood; Dock Street Dam Spillway Visible near Bridge Piers, and Norfolk Southern Rail Bridge is Visible at Upper Right**




**Figure 3-19. Views of Lemoyne Mural along Lowther Street from I-83 South Exit 41B (Lemoyne) Ramp**




Note: Google Street View is the source for the landscape photograph; Google blurs faces in the Street View application. Robert Nuss, KCI (2022) is the source for the inset photograph at bottom left.

Much of Lemoyne is relatively flat terrain, which limits views to the immediate surroundings. Certain residential neighborhood streets in Lemoyne have views of the highway. Lowther Street homes overlook the existing southbound I-83 exit ramp lane and the highway lanes beyond (**Figure 3-20** and **Figure 3-21**). Vehicles, concrete barriers, metal railings, and traffic lanes are visible from the homes' front windows and doorsteps.

**Figure 3-20. View to the West of Lowther Street Homes (left side) and Proximity to Lowther Street (center), I-83 South Exit Ramp, and I-83 Lanes**




**Figure 3-21. View to the North across Lowther Street to I-83 South Exit Lane and I-83 Travel Lanes Beyond; View from 254 Lowther Street**



Residences along the southern side of Lowther Street west of S. 3rd Street currently view a relatively open field with trees and the I-83 north Exit 41B Lemoyne interchange off ramp to Lowther Street to the west. The I-83 north on ramp for the Lemoyne interchange was previously part of the Maple/Lowther intersection, and the vegetation change can still be seen in the aerial inset of **Figure 3-22**. The ramp footprint would be returning to that location with the proposed reconfiguration of the Lemoyne interchange as part of the I-83 South Bridge Project. **Figure 3-22** also shows the current northbound view from residences in the Lowther Street/Maple Street area.

**Figure 3-22. View from Lowther Street, West of S. 3rd Street**




Users of the S. 3rd Street Bridge, including non-motorized users, see I-83 travel lanes and the Norfolk Southern Railroad lines from the bridge. Travelers on I-83 see a standard concrete overpass, with concrete piers in the highway median and spanning the rail lines. The bridge is mounted with a large highway sign for westbound I-83 travelers (see **Figure 3-23**, **Figure 3-24**, and **Figure 3-25**).

**Figure 3-23. View of S. 3rd Street Bridge Crossing over I-83, Looking East**




**Figure 3-24. View of S. 3rd Street Bridge Crossing over I-83 and Rail Lines, Looking West**



**Figure 3-25. View from S. 3rd Street Bridge Crossing over I-83 and Rail Lines, Looking West**




## 3.4.3 Environmental Consequences

### No-build Alternative

Under the no-build alternative, the views from, and of, I-83, its exit and entrance ramps, and the South Bridge would not change. However, without replacement, the bridge structure would continue to deteriorate and would eventually be at risk for full or partial failure. Should the bridge no longer be safe for travel, or portions of the bridge fall, the views of and from the bridge would be substantially impacted.

### Build Alternative

While the new South Bridge would be similar in height and length to the existing bridge, it may appear more prominent as a landscape feature, with its wider cross section. While the design plans are still preliminary, the potential bridge designs include a multi-girder bridge option with concrete girders or a multi-girder bridge option with steel girders. Both potential bridge designs have repeating piers. The final bridge design would be determined by the contractor in coordination with PennDOT. The contractor will need to work within PennDOT's required parameters related to aesthetic treatments of piers and for under bridge lighting. **Figure 3-26** shows bird's eye view and close-up view of the multi-girder bridge design.

**Figure 3-26. Bird's Eye View of Multi-girder Bridge Design Alternative from the West; Close-up View from the Capital Area Greenbelt on the East Shore**



The views of the I-83 roadway for drivers on the South Bridge will be of a wider highway. The additional travel lanes will be more prominent for travelers on the bridge. The re-establishment of full, outside shoulders would mean that the views of portions of the river close to the bridge would be less visible because the outside travel lanes would not be as close to the bridge edge. Current design standards are anticipated to raise the outer concrete barrier height from 32 to 45 inches, which would reduce the landscape view for travelers in shorter vehicles. The change in height is unlikely to be perceptible to South Bridge viewers, although the higher barriers may obscure some views of the traffic itself.

Southbound travelers exiting I-83 after the bridge at Exit 41B into Lemoyne would no longer be routed under the highway to connect with S. 3rd Street near Lowther Street. The new exit ascends up and over the Norfolk Southern Railroad tracks and then descends to connect with S. 3rd Street near Plum Street. Travelers would no longer pass alongside the Lemoyne wall mural along Lowther Street. The retaining wall that displays the mural would be buried by construction of the new highway lanes and re-alignment of Lowther Street.

The views of and from the I-83 viaduct on the east shore would not greatly change as the height of the structure is similar, and the number and placement of piers are anticipated to be similar to existing. The additional width of the structure may initially be noticeable from the surrounding ground or buildings, but would not greatly change the overall view. The Front Street/2nd Street interchange approach roads and ramps adjacent to the Shipoke neighborhood (Randall Shughart Street) would be similar in size and shape. The proposed restroom facilities within the parking area currently located amongst the piers of the viaduct would be visible to Greenbelt users, but unlikely to be visible by I-83 travelers.

The views of the I-83 highway within Lemoyne would not greatly change. Portions of Ramp X (the proposed off ramp from I-83 to S. 3rd Street) may be visible to nearby residential or recreational areas where it is elevated over the railroad tracks. The exception is in areas where noise barriers are proposed. Should noise barriers be constructed (a future public involvement process provides an opportunity for impacted property owners to vote on their usage), these walls would range in height from 10 to 20 feet, and would be new, visible features within the views of the adjacent properties along Lowther Street. The noise barriers would also shield these properties from the view of I-83 travelers. See **Section 3.6,** Noise, for more information.

The S. 3rd Street Bridge would be wider and taller than the existing bridge to provide additional railroad clearance but would have a similar form. The design is proposed to be consistent with the design aesthetic along the rest of the I-83 corridor. See **Figure 3-27** for anticipated architectural treatments and protective fencing.

**Figure 3-27. The Proposed S. 3rd Street Bridge Would Look Similar to the SR-22 Jonestown Road Bridge (shown here) for Architectural Treatment and Protective Fence**




## 3.4.4 Mitigation

The mitigation measures to off-set visual effects associated with the I-83 South Bridge Project include:

- Construct the I-83 South Bridge to be visually similar to the existing structure, using either a multi-girder or concrete segmental box bridge design as shown on the artist renderings included in this section (**Figure 3-26**)
- Add architectural treatments and decorative features to the S. 3rd Street Bridge to provide consistent aesthetics along the I-83 corridor (**Figure 3-27**)
- Develop an architectural treatment plan for the viaduct, ramps, and retaining walls during final design
- Develop a landscaping plan to minimize visual intrusion of the interstate in residential areas during final design

- Design the noise walls for a consistent aesthetic along the I-83 corridor; discuss the community-facing side of the noise wall with the benefited receptors during final design to determine the preferred aesthetic treatment (assuming the benefitted receptors vote in favor of constructing the noise wall)
- Continue to coordinate with Lemoyne Borough to identify a potential solution for the loss of the mural on the retaining wall along Lowther Street

It should be noted that as per the agreement reached when PennDOT permitted the mural to be placed on the retaining wall, PennDOT is not responsible for mitigating the loss of this community visual asset. However, PennDOT is coordinating directly with the borough and has offered to discuss potential solutions. No specific agreement has been reached to date.

# 3.5 Air Quality and Climate Change

## 3.5.1 Introduction and Background

Ambient (outdoor) air quality is affected by climate, topography, meteorological conditions, and airborne pollutants produced by natural or human-made sources, and is typically characterized by comparing the concentration of various pollutants with the standards set by federal and state agencies.

**Detailed information on the project's air quality analysis is presented in:**

- *State Route 0083, Section 079 Air Quality Analysis Technical Report* (May 2019)
- *PM Project Level Air Quality Conformity Determination Level 3 Screening Support Memo* (April 2021)
- *Air Quality Analysis Technical Report* (October 2021)

The air quality analysis for this project has been conducted in accordance with the USEPA[31], FHWA, and PennDOT approved air quality protocols and procedures as outlined in *Project-Level Air Quality Handbook*[32] (PennDOT Publication 321, October 2017). It evaluates the air quality impacts of the project within the study areas, including:

- Whether the project will cause or contribute to exceeding carbon monoxide (CO) or particulate matter (PM) air quality standards, or increase the frequency or severity of any existing exceedances;
- The potential for Mobile Source Air Toxics (MSATs) impacts due to the project; and
- The greenhouse gas (GHG) impacts of the project.

### NAAQS and Regional Conformity

The USEPA has established maximum allowable atmospheric concentrations, known as the National Ambient Air Quality Standards (NAAQS), for criteria pollutants to protect public health and welfare. These six criteria pollutants are CO, ozone, two size categories of fine particulate matter ($PM_{10}$ and $PM_{2.5}$), nitrogen oxides (NOx), sulfur dioxide, and lead. Of these, CO, $PM_{2.5}$ and

[31] Clean Air Act (42 U.S.C. Part 7401 et seq.) https://www.epa.gov/clean-air-act-overview/clean-air-act-text
[32] https://www.dot.state.pa.us/public/pubsforms/Publications/PUB 321.pdf

$PM_{10}$, ozone, and NOx are caused by transportation-related sources and are a concern to human health and the environment.

States and/or counties that do not meet the NAAQS for one or more criteria pollutants are designated by the USEPA as "non-attainment areas." Areas previously designated as non-attainment, but subsequently re-designated to "in-attainment" (because they no longer violate the NAAQS) are reclassified as maintenance areas and are subject to maintenance plans to be developed and included in the State Implementation Plan (SIP). The Final Conformity Rule (40 CFR 51 and 93) requires air quality conformity determinations for transportation plans, programs, and projects in non-attainment or maintenance areas.

### MSATs

The USEPA also regulates 188 air toxics, also known as hazardous air pollutants. Nine of these have noteworthy contributions from transportation sources and are known as MSATs. USEPA has yet to establish regulatory concentration targets for these nine MSATs; however, they remain a concern for highway projects. For projects with higher potential for MSAT effects, FHWA (2016) has created guidance to determine if there are meaningful differences among project alternatives.

### GHGs and Climate Change

GHGs are a group of compounds that are able to trap heat in the atmosphere, keeping the Earth's surface warmer than it would be if they were not present. Climate change refers to any substantial change in measure of climate (e.g., temperature, sea level, or precipitation) lasting for an extended period (decades or longer). Climate change may result from natural factors and processes or from human activities. Transportation projects have the potential to contribute to climate change by producing GHG emissions through direct sources such as vehicle tailpipe emissions and fuel refining as well as road construction and maintenance activities. According to the USEPA, GHG emissions from the transportation sector account for approximately 29 percent of total U.S. GHG emissions, making it the largest contributor (electricity production has historically been the largest, but is now 25 percent; USEPA 2021). To assess project-level GHG emissions, PennDOT considers regional vehicle miles traveled (VMT) and traffic operations (i.e., travel speeds) as well as lifecycle contributions, including construction and maintenance. PennDOT also assesses the effects climate change may have on project infrastructure, primarily through temperature and precipitation modeling.

## 3.5.2 Affected Environment and Screening Methodologies

The Final Conformity Rule (40 CFR 51 and 93) requires air quality conformity determinations for transportation plans, programs, and projects in non-attainment or maintenance areas. Both Dauphin and Cumberland Counties are considered maintenance areas for the 2006 $PM_{2.5}$ and the 1997 8-hour Ozone NAAQS, but are in attainment for other criteria pollutants. However, the projected future AADT and truck traffic volumes in the project area exceed identified thresholds for CO, $PM_{2.5}$, and MSATs and therefore require qualitative screenings and assessments to assess

the potential air quality effects of the proposed transportation improvements (PennDOT Publication 321 [2017]).

## 3.5.3 Environmental Consequences

### Regional Conformity

Conformity to the SIP is determined through regional air quality analyses of the TIP by the Tri-County Regional Planning Commission, the lead agency for the Harrisburg Area Transportation Study and the designated metropolitan planning organization for the project area. Inclusion in the TIP indicates that the project has been considered and included as part of an approved Regional Conformity analysis. The I-83 South Bridge project is included in the 2023–2026 approved STIP (adopted September 29, 2022), referenced as a combination of Projects 113754 (I-83 South Bridge, Lemoyne interchange, and S. 3rd Street Bridge) and 113376 (I-83 East Shore viaduct and 2nd Street/Front Street interchange). The I-83 South Bridge project is also included in the Harrisburg Area Transportation Study's LRTP air quality conformity analysis.

### Project-level Air Quality Analysis and Impacts

A project-level analysis was performed to evaluate potential air quality impacts relative to the NAAQS. For the I-83 South Bridge Project, a CO analysis, $PM_{2.5}$ analysis, MSATs assessment, and GHG/climate change analysis were performed, in accordance with PennDOT Publication 321 (2017).

#### *CO Analysis*

A qualitative analysis for CO was performed for this project based on a review of project traffic data as well as the results of the air quality modeling and quantitative CO analysis performed for the overlapping ESS3 and I-83/PA-581 Interchange Bottleneck Safety Projects. These demonstrated that both the 1- and 8-hour concentrations of CO were well below the NAAQS for both the no-build and build conditions. Given that the I-83 South Bridge Project is similar in scope, setting, and traffic levels as the adjacent ESS3 Project, it was determined that this project will not have significant adverse impacts on air quality as a result of CO emissions.

#### *$PM_{2.5}$ Analysis*

The project includes a total design year traffic volume greater than 125,000 vehicles and a truck volume greater than 10,000 vehicles, requiring Level 3 Interagency Consultation Group (ICG) Screening. The qualitative screening examined the differences between the no-build and build condition traffic volumes, as well as the effects of the project on traffic congestion. The details of this project were also compared to the air quality assessments performed for the overlapping ESS3 Project (found to "not be a project of air quality concern" in February 2019), and the adjacent I-83/PA-581 Interchange Bottleneck Safety Project. The completion of the I-83 South Bridge Project would link these two adjacent sections and reduce system-wide congestion in the build versus no-build condition. Additionally, there is no substantial variation in traffic volumes or composition between the no-build and build conditions. As a result, the ICG concluded that the I-83 South

Bridge Project would not impact local or regional air quality for $PM_{2.5}$ and is therefore "not a project of air quality concern" relative to $PM_{2.5}$.

***MSATs Assessment***

I-83 in the project area exceeds the daily traffic volume threshold for consideration as a project with higher potential for MSAT concerns. However, the design-year build condition traffic is nearly identical to the design-year no-build condition traffic (varying by less than 1 percent); therefore, it is expected there would be no appreciable difference in overall MSAT emissions between the two alternatives. For both the build and no-build alternatives, emissions are anticipated to be lower than present levels as a result of USEPA's national control programs[33] that are projected to reduce annual MSAT emissions by over 90 percent between 2010 and 2050. While local conditions may differ, the anticipated regional reductions are predicted to be so great that the MSAT emissions for this project are anticipated to be lower in the future.

## GHG Emissions and Climate Change

### *GHG Emissions*

***No-build Alternative***

Under the no-build alternative, no capacity would be added to the South Bridge, area travelers would continue to encounter congestion during peak hours, and traffic operations would continue to deteriorate during peak periods. Inspections and maintenance of the existing bridge would continue to increase in frequency and magnitude, creating substantial and unpredictable impacts to traffic movement in the Harrisburg area with more frequent lane closures. All these conditions would increase congestion on I-83, creating an increase in VMT as traffic diverts to alternate routes, two factors that contribute substantially to GHG emissions.

***Build Alternative***

Under the build alternative, it is anticipated that the increased capacity and reduced congestion resulting from additional travel lanes would reduce GHG emissions. It is anticipated that the construction and maintenance activities under the build alternative would be lower than the lifecycle costs of recurring and more frequent maintenance if no improvements were made to the existing bridge.

For both the no-build and build alternatives, GHG emission reductions would also be supported through a national strategy for more stringent fuel economy and GHG emissions standards, which started in 2012 model year vehicles. Reduced congestion and more stringent national fuel economy standards are expected to provide further reductions in transportation sector emissions.

Policy measures to adopt electric and hybrid-electric vehicles to reduce GHG emissions in the transportation sector are also in effect at the national, state, and local levels, and manufacturers have committed to increasing the percentage of zero-emission vehicles in the national fleet. For

[33] https://www.epa.gov/mobile-source-pollution/regulations-reduce-mobile-source-pollution

example, General Motors has indicated that their vehicles will be exclusively electric by 2035, and other manufacturers have similar initiatives. Reduction benefits for specific locations are dependent on electricity generation fuel mix, vehicle type, and time of day for charging. Pennsylvania power is generated primarily through coal, nuclear, and natural gas, which vary widely in emissions levels.

During construction, PennDOT's existing Capital Beltway Intelligent Transportation Systems will be used to provide real-time traffic conditions and traveler information to the public to help reduce congestion by recommending alternate routes. Relative to GHG emissions, reduced mainline congestion will offset the increased VMT from temporary route changes. Traffic would be maintained on the South Bridge during construction by constructing the northbound lanes of the new bridge immediately to the south of the existing bridge. Traffic would then be shifted to the newly constructed structure, allowing for the removal of the old structure and construction of the new southbound lanes where the existing bridge is currently located.

### *Climate Change Impacts*

Pennsylvania's current warming and wetting trends are expected to continue at an accelerated rate. It is projected that by the middle of the twenty-first century, Pennsylvania will be approximately 5.4 degrees Fahrenheit warmer than it was at the end of the twentieth century. The corresponding annual precipitation increase is expected to be 8 percent, with a winter increase of 14 percent.[34] The likelihood for meteorological drought is expected to decrease, while months with above-normal precipitation are expected to increase.

PennDOT's recently completed *Extreme Weather Vulnerability Study*[35] focuses on an evaluation of historic flooding vulnerabilities, development of a framework for addressing climate change impacts, and an initial assessment of risks and priorities related to the identified vulnerabilities. The study identified the project study area as high-risk based on historic flooding vulnerability in the west shore portion of the project area (Lowther Street to 2nd Street). A new bridge structure constructed to current design standards would be more resilient to increased flood risks from a changing climate than the existing, 60-year-old structure.

PennDOT has initiated a multi-phase effort aimed to better anticipate the consequences and impacts of extreme weather events on transportation infrastructure and to identify funding priorities and strategies to improve transportation system resiliency. The I-83 South Bridge Project will include updated stormwater infrastructure as part of the roadway reconstruction. Additionally, the new bridge structures will be designed and constructed consistent with current PennDOT/FHWA standards. These elements are expected to improve resiliency of the roadway

[34] Per the *Air Quality Analysis Technical Report* (October 2021); *Pennsylvania Climate Change Impacts Assessment* (2016), under the Representative Concentration Pathway 8.5, one of the four GHG concentration trajectories adopted by the Intergovernmental Panel on Climate Change in 2014.
[35] http://s3.amazonaws.com/tmp-map/climate/doc/StudyReport-PaVulnerabilityStudy-ver040317.pdf

and bridge infrastructure to storm events. Additional improvements to ensure resiliency may also be addressed in final design activities.

### 3.5.4 Mitigation

The I-83 South Bridge Project is not expected to result in long-term air quality impacts nor in increased GHG emissions; therefore, specific mitigation measures are not warranted. Temporary air quality impacts from construction activities are addressed under **Section 3.10**, Construction Impacts.

## 3.6 Noise

### 3.6.1 Introduction/Methods

Noise is defined as unwanted or disturbing sound, which can occur when it interferes with normal activities such as sleep, work, speech, or recreation. State highway agencies must complete a noise analysis for any federal or Federal-aid Highway Program projects where the project is considered a Type 1 Transportation Improvement Project, defined by 23 CFR 772.5. This project qualifies as Type 1, specifically because it involves a substantial horizontal and vertical alteration of the existing highway, including the addition of through travel lanes and auxiliary lanes as well as relocation of interchange lanes and ramps.

**Detailed information on the noise analysis is presented in:**

- *Final Design Noise Report – SR 0083, Section 079* (December 2020)
- *SR 0083-094 Preliminary Engineering Noise Analysis Report* (April 2022)

A detailed traffic noise analysis was conducted in accordance with PennDOT/FHWA procedures as outlined in PennDOT's *Project Level Highway Traffic Noise Handbook*[36] (PennDOT Publication 24, May 2019). The study area extended from just east of the PA-581/I-83 interchange in Lemoyne to approximately 50-feet east of existing Cameron Street. This study area incorporated the full length of the proposed viaduct structure. The detailed analysis included noise monitoring of existing conditions to allow for computer modeling of worst-case existing (2016) and design year (2050) conditions using the FHWA Traffic Noise Model (TNM), version 2.5. An overlapping section of the Shipoke neighborhood, the Greenbelt Trail, and the viaduct was modeled as part of the ESS3 Project and is incorporated here to supplement the analysis.

To evaluate existing noise levels and provide data to assist with noise model validation, noise monitoring was conducted at two 24-hour and 15 short-term locations adjacent to the project area. The ambient 24-hour noise monitoring at the two sites in the project area was performed to define traffic noise fluctuations throughout the day. This monitoring was used to establish that traffic noise levels from I-83 remain relatively constant from approximately 6 a.m. to 7 p.m. It also identified that Norfolk Southern Railway noise is a major contributor to the ambient noise levels north of I-83. Short-term noise measurements were taken at 15 sensitive noise receptor sites

[36] https://www.dot.state.pa.us/public/pubsforms/Publications/PUB%2024.pdf

identified along the project area. The results of the short-term noise monitoring were used to validate the TNM base models.

Sound pressure is measured in terms of decibels (dB). A-weighted decibels (dBA) are an expression of the relative loudness of sounds in air, with an emphasis on frequencies that can be perceived by the human ear. Noise is measured on a logarithmic scale, which means that the doubling of sound energy increases the level by 3 dB. On this scale, 0 dBA cannot be heard, and 120 dBA is uncomfortably loud and painful to human hearing. An increase in sound levels of 1 to 2 dBA is generally not perceptible by the human ear. An increase of 10 dBA is perceived as a doubling of sound levels. Relative to traffic noise, doubling the traffic volume yields an approximate 3 dBA increase.

FHWA has established (adopted by PennDOT in its *Project Level Highway Traffic Noise Handbook*; PennDOT Publication 24 [2019]) noise abatement criteria (NAC) for five categories of land uses or activities, as shown in **Table 3-8**. Under FHWA criteria, a noise impact occurs when traffic noise levels approach or exceed the NAC shown in **Table 3-8**. PennDOT interprets a noise level "approaching" the criteria as a noise level that is 1 dBA less than the NAC level. In addition to the absolute criteria defined in **Table 3-8**, noise impacts can occur when design-year noise levels "substantially" exceed existing noise levels. PennDOT defines the substantial noise increase criteria for Categories A through E as increases of 10 dBA or greater.

The TNM incorporates engineering design information and project mapping elements to evaluate traffic-induced noise levels. The information applied to the modeling effort includes existing and proposed roadway and grading geometry, worst-case traffic volumes, travel speeds, vehicle types, building rows and tree zones, existing local roadways with measurable noise influences, and an existing noise barrier adjacent to the Shipoke community.

**Table 3-8. PennDOT and FHWA Hourly Weighted Sound Levels (dBA) for Various Land Use Activity Categories**

| Land Use Activity Category | NAC | Land Use Activity Category |
|---|---|---|
| A | 57 (exterior) | Lands on which serenity and quiet are of extraordinary significance and serve an important public need, and where the preservation of those qualities is essential if the area is to continue to serve its intended purpose |
| B[a] | 67 (exterior) | Residential |
| C[a] | 67 (exterior) | Active sports areas, amphitheaters, auditoriums, campgrounds, cemeteries, day care centers, hospitals, libraries, medical facilities, parks, picnic areas, places of worship, playgrounds, public meeting rooms, public or nonprofit institutional structures, radio studios, recording studios, recreation areas, Section 4(f) sites, schools, television studios, trails, and trail crossings |

| Land Use Activity Category | NAC | Land Use Activity Category |
|---|---|---|
| D | 52 (interior) | Auditoriums, day care centers, hospitals, libraries, medical facilities, places of worship, public meeting rooms, public or nonprofit institutional structures, radio studios, recording studios, schools, and television studios |
| E | 72 (exterior) | Hotels; motels; offices; restaurants/bars; and other developed lands, properties, or activities not included in A, B or C |
| F | -- | Agriculture, airports, bus yards, emergency services, industrial, logging, maintenance facilities, manufacturing, mining, rail yards, retail facilities, shipyards, utilities (water resources, water treatment, electrical), and warehousing |
| G | -- | Undeveloped lands that are not permitted |

[a] Includes undeveloped lands permitted for this activity category

## 3.6.2 Affected Environment

The noise analysis was initiated by studying the project area to identify the locations of noise-sensitive land uses within meaningful proximity to the proposed improvements. Most of the noise sensitive land uses in the project area consist of residential structures in communities both north and south of I-83 (Category B), with other noise sensitive areas such as the Memorial Park baseball field, Lemoyne Borough Swimming Pool, Shipoke Playground, and Greenbelt Trail (Category C).

Commercial and industrial land uses (Category E) are present along the project study area. None have exterior noise-sensitive use areas; therefore, no analyses were performed for Category E facilities. For the undeveloped lands (Category G), an analysis of typical cross sections was performed to determine the limits of potential future noise impacts for land use planning.

The project area was divided into Noise Study Areas (NSAs) based on land use activity category as shown on **Figure 3-28** and **Figure 3-29**. These were based on having similar noise levels and common noise influences. Within these NSAs, the TNM was used to predict existing and future traffic noise at sensitive receptors. The existing and predicted noise levels within these NSAs are detailed within the *I-83, Section 094 Preliminary Engineering Noise Analysis Report* (April 2022) and supplemented with information from the *SR 0083, Section 079 Preliminary Technical Noise Report* (March 2019; note: NSA designations for these data are marked as ES-#), and summarized in **Table 3-9.** The existing worst-case traffic noise impacts are generally limited to front-row receptors or receptors with a direct line of sight to I-83 travel lanes.

**Table 3-9. Noise Level Summary**

| NSA | Site ID | Sites Represented | Activity Category/ NAC | Existing (2016) Peak Hour Noise Level | Future (2050) No-build Noise Level | Future (2050) Build Noise Level | Build Impact (Yes/No) |
|---|---|---|---|---|---|---|---|
| 1 | 1-1 | 1 residence | B / 66 | 60 | 62 | 62 | No |
| 1 | 1-2 | 2 residences | B / 66 | 61 | 63 | 65 | No |
| 1 | 1A | 2 residences | B / 66 | 58 | 59 | 60 | No |
| 1 | 1B | 2 residences | B / 66 | 57 | 58 | 59 | No |
| 1 | 1C | 2 residences | B / 66 | 59 | 60 | 61 | No |
| 2 | 2-1 | 3 residences | B / 66 | 70 | 71 | 73 | Yes |
| 2 | 2-2 | 3 residences | B / 66 | 64 | 65 | 67 | Yes |
| 2 | 2A | 2 residences | B / 66 | 66 | 68 | 70 | Yes |
| 2 | 2B | 2 residences | B / 66 | 68 | 69 | 71 | Yes |
| 2 | 2C | 2 residences | B / 66 | 71 | 72 | 75 | Yes |
| 2 | 2D | 3 residences | B / 66 | 62 | 64 | 65 | No |
| 2 | 2E | 1 residence | B / 66 | 64 | 65 | 66 | Yes |
| 2 | 2F | 3 residences | B / 66 | 65 | 66 | 67 | Yes |
| 3 | 3-1 | 6 residences | B / 66 | 70 | 71 | 72 | Yes |
| 3 | 3-2 | 5 residences | B / 66 | 65 | 67 | 67 | Yes |
| 3 | 3-3 | 2 residences | B / 66 | 66 | 67 | 69 | Yes |
| 3 | 3A | 3 residences | B / 66 | 72 | 72 | 73 | Yes |
| 3 | 3B | 3 residences | B / 66 | 72 | 73 | 73 | Yes |
| 3 | 3C | 9 residences | B / 66 | 60 | 61 | 62 | No |
| 3 | 3D | 4 residences | B / 66 | 62 | 63 | 64 | No |
| 3 | 3E | 3 residences | B / 66 | 63 | 65 | 65 | No |
| 3 | 3F | 5 residences | B / 66 | 65 | 66 | 67 | Yes |
| 3 | 3G | 3 residences | B / 66 | 66 | 67 | 68 | Yes |
| 3 | 3H | 4 residences | B / 66 | 65 | 67 | 68 | Yes |
| 4 | 4-1 | 3 residences | B / 66 | 63 | 64 | 66 | Yes |
| 4 | 4-2 | 2 residences | B / 66 | 55 | 56 | 57 | No |
| 4 | 4A | 4 residences | B / 66 | 57 | 59 | 59 | No |
| 4 | 4B | 2 residences | B / 66 | 58 | 60 | 60 | No |
| 4 | 4C | 3 residences | B / 66 | 59 | 61 | 61 | No |
| 4 | 4D | 5 residences | B / 66 | 58 | 59 | 59 | No |
| 4 | 4E | 10 residences | B / 66 | 57 | 59 | 59 | No |
| 4 | 4F | 8 residences | B / 66 | 56 | 57 | 58 | No |
| 4 | 4G | 6 residences | B / 66 | 56 | 57 | 58 | No |
| 5 | 5-1 | 2 residences | B / 66 | 57 | 58 | 55 | No |
| 5 | 5-2 | 6 residences | B / 66 | 59 | 61 | 57 | No |
| 5 | 5-3 | 2 residences | B / 66 | 58 | 60 | 59 | No |
| 5 | 5-4 | 3.6 ERU | C / 66 | 60 | 62 | 62 | No |
| 5 | 5A | 6 residences | B / 66 | 59 | 60 | 60 | No |
| 5 | 5B | 4 residences | B / 66 | 59 | 60 | 58 | No |
| 5 | 5C | 4 residences | B / 66 | 59 | 61 | 56 | No |
| 5 | 5D | 6.1 ERU | C / 66 | 60 | 61 | 59 | No |

| NSA | Site ID | Sites Represented | Activity Category/ NAC | Existing (2016) Peak Hour Noise Level | Future (2050) No-build Noise Level | Future (2050) Build Noise Level | Build Impact (Yes/No) |
|---|---|---|---|---|---|---|---|
| 5 | 5E | 3.6 ERU | C / 66 | 59 | 61 | 61 | No |
| 5 | 5F | 3 residences | B / 66 | 55 | 57 | 56 | No |
| 5 | 5G | 4 residences | B / 66 | 56 | 57 | 56 | No |
| 5 | 5H | 8 residences | B / 66 | 56 | 57 | 57 | No |
| 5 | 5I | 8 residences | B / 66 | 57 | 58 | 57 | No |
| 5 | 5J | 6 residences | B / 66 | 57 | 59 | 57 | No |
| 5 | 5K | 3 residences | B / 66 | 58 | 59 | 59 | No |
| 5 | 5L | 2 residences | B / 66 | 58 | 60 | 60 | No |
| 6 | 6-1 | 4 residences | B / 66 | 65 | 66 | 65 | No |
| 6 | 6-2 | 7 residences | B / 66 | 57 | 58 | 58 | No |
| 6 | 6A | 2.2 ERU | C / 66 | 65 | 66 | 66 | Yes |
| 6 | 6B | 2 residences | B / 66 | 58 | 59 | 59 | No |
| 6 | 6C | 2.2 ERU | C / 66 | 64 | 65 | 65 | No |
| 6 | 6D | 4 residences | B / 66 | 64 | 65 | 65 | No |
| 6 | 6E | 3 residences | B / 66 | 63 | 65 | 65 | No |
| 6 | 6F | 10 residences | B / 66 | 59 | 60 | 60 | No |
| 6 | 6G | 3 residences | B / 66 | 55 | 56 | 56 | No |
| 7[a] | 7-1 | Residences | B /66 | 55 | 55 | 60 | No |
| 7[a] | 7-2 | Residences | B /66 | 55 | 55 | 58 | No |
| 7[a] | 7-3 | Residences | B /66 | 53 | 53 | 59 | No |
| 7[a] | 7-4 | Residences | B /66 | 59 | 59 | 61 | No |
| 7[a] | 7-5 | Residences | B /66 | 60 | 60 | 62 | No |
| 8[b] | 8-1 | Playground | C / 66 | 54 | 54 | 60 | No |
| 9[c] | 9-1 | Trail[c] | C / 66 | 61 | 61 | 63 | No |
| UDL | UW-1 | 50-foot | G | 71 | 73 | 76 | -- |
| UDL | UW-2 | 100-foot | G | 70 | 71 | 74 | -- |
| UDL | UW-3 | 200-foot | G | 67 | 69 | 71 | -- |
| UDL | UW-4 | 400-foot | G | 64 | 65 | 66 | -- |
| UDL | UE-1 | 50-foot | G | 68 | 69 | 70 | -- |
| UDL | UE-2 | 100-foot | G | 67 | 68 | 69 | -- |
| UDL | UE-3 | 200-foot | G | 66 | 67 | 68 | -- |
| UDL | UE-4 | 400-foot | G | 63 | 64 | 65 | -- |

Notes: ERU = Equivalent Residential Units; UDL = Undeveloped Lands

[a] NSA-7 represents 150 residences. ERUs are not specified for individual receptors. Overlaps with NSA-6. NSA-7 is referenced as NSA-1 in *Final Design Noise Report – SR 0083, Section 079* (December 2020), and its receptor labels are similarly structured.

[b] NSA 8 is referenced as NSA-4 in *Final Design Noise Report – SR 0083, Section 079* (December 2020).

[c] NSA 9 represents the Greenbelt Trail south of I-83, respectively. No ERU designations made. NSA 9 is referenced as NSA-5 in its technical report (*Final Design Noise Report – SR 0083, Section 079* [December 2020]).

**Figure 3-28. Noise Study Areas and Impacts (Lemoyne West Shore)**

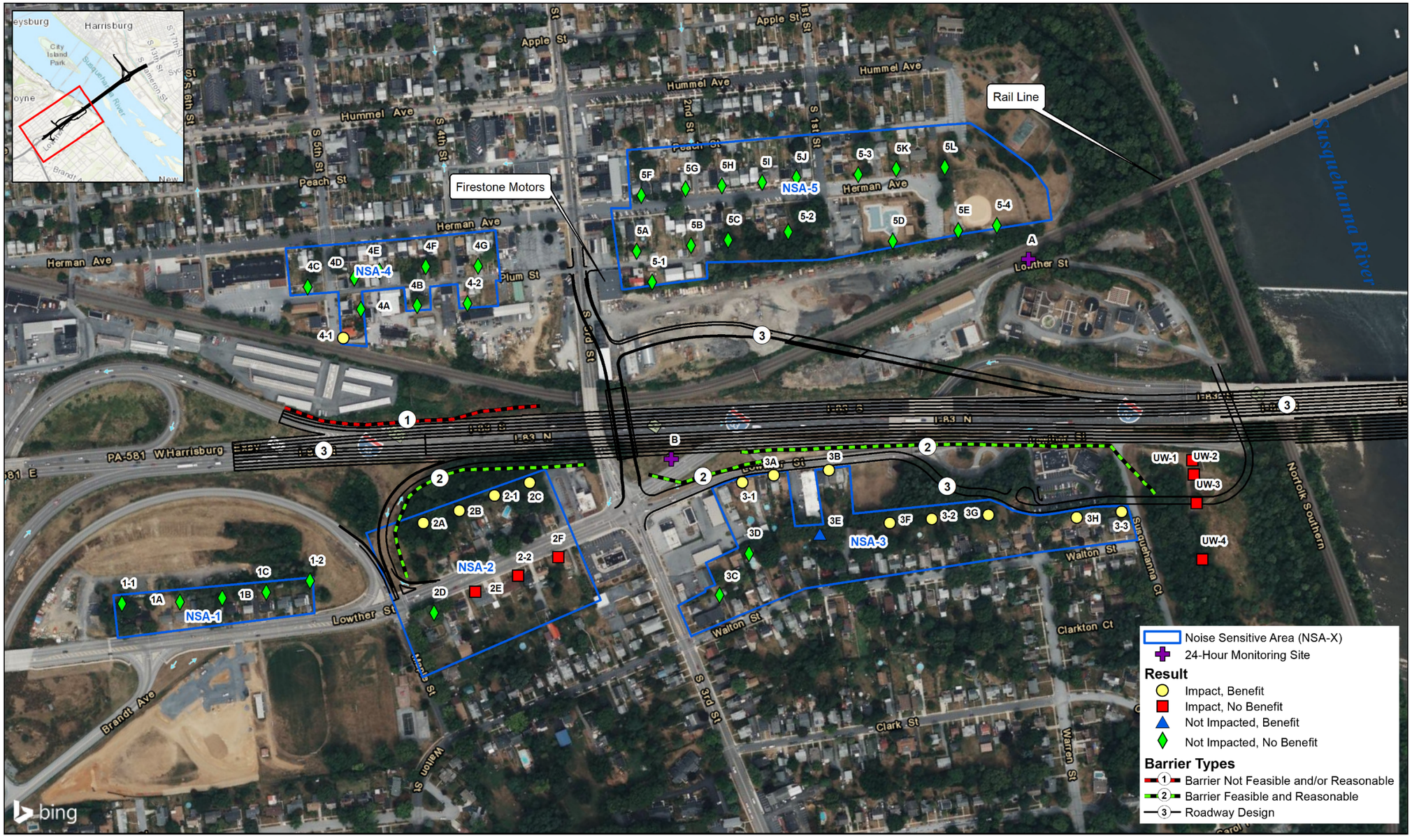


pennsylvania DEPARTMENT OF TRANSPORTATION

0 Feet 300

Data Sources: Navarro & Wright, Preliminary Engineering Noise Analysis Report, February 2022

I-83 SOUTH BRIDGE EA
DETAILED NOISE STUDY AREA (WEST SHORE)

PATH: \\MAHPI-FILE01\GIS_PROJECTS\MISCMAPPING\PENNDOT_AUDREYH\7.2_WORK_IN_PROGRESS\MAP_DOCS\DRAFT\SOUTHBRIDGE_EA\2022_UPDATES\OTHER_FIGURES\SB_NOISE_A_WEST_SHORE_20230921.MXD - USER: FBRILHAN - DATE: 9/21/2023

**Figure 3-29. Noise Study Areas and Impacts (East Shore)**

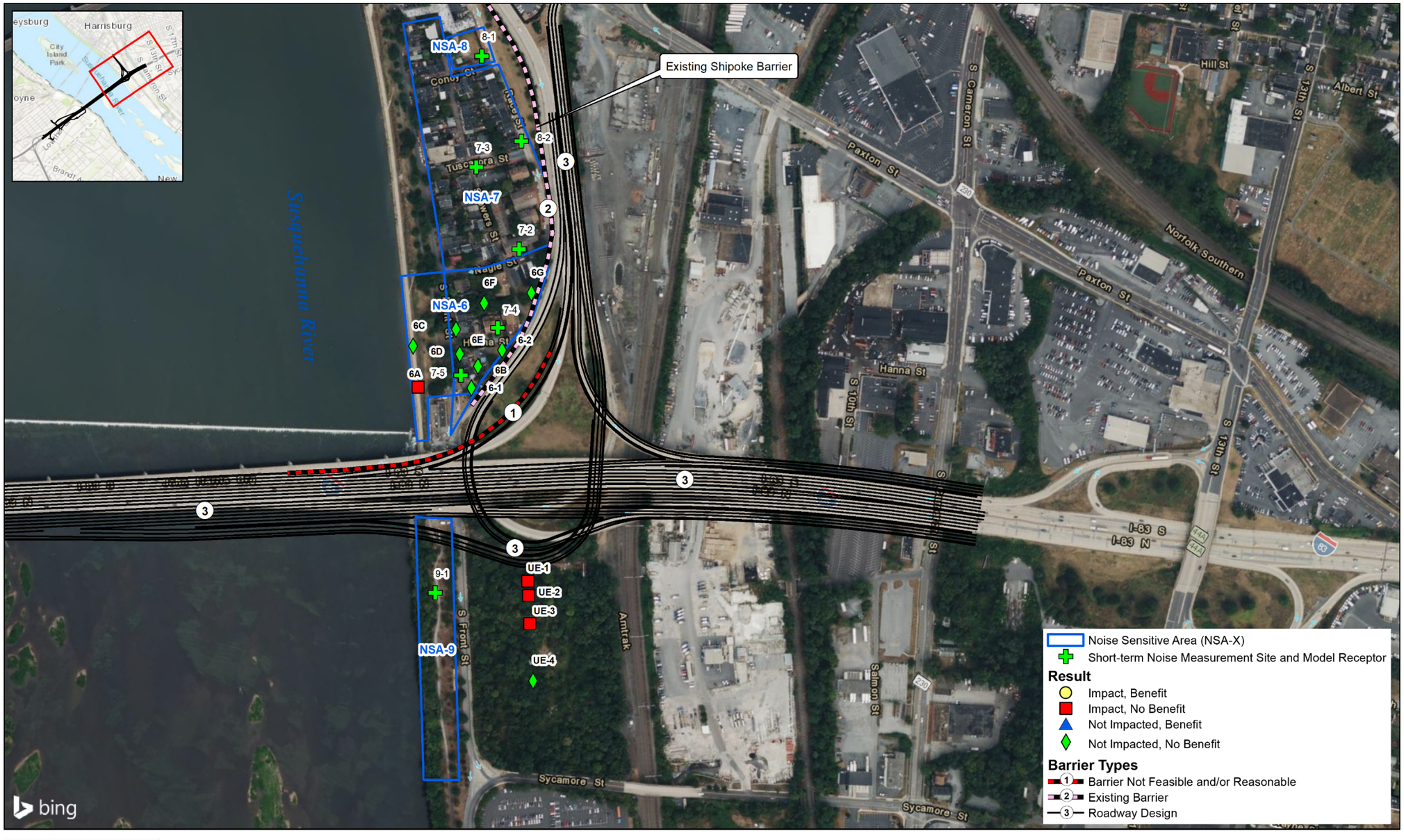


pennsylvania DEPARTMENT OF TRANSPORTATION

0 Feet 300

Data Sources: Navarro & Wright, Preliminary Engineering Noise Analysis Report: SR 0083, Section 094, February 2022; JMT, Draft Preliminary Technical Noise Report: SR 0083, Section 079, March 2019.

I-83 SOUTH BRIDGE EA
DETAILED NOISE STUDY AREA (EAST SHORE)

PATH: \\MAHPI-FILE01\GIS_PROJECTS\MISCMAPPING\PENNDOT_AUDREYH\7.2_WORK_IN_PROGRESS\MAP_DOCS\DRAFT\SOUTHBRIDGE_EA\2022_UPDATES\OTHER_FIGURES\ISB_NOISE_B_EAST_SHORE_20220921.MXD - USER: FBRILHAN - DATE: 9/21/2023

## 3.6.3 Environmental Consequences

Noise levels for the project alternatives were predicted and summarized in **Table 3-9**. **Figure 3-28** and **Figure 3-29** show the boundaries of the NSAs, with individual receptor locations marked where they are modeled in the TNM. **Figure 3-28** and **Figure 3-29** show where traffic noise barriers were evaluated and color-coded to identify where they provide sufficient benefit to be proposed for construction, and would require more detailed analysis and public consideration during the Final Design phase of the project.

### No-build Alternative (2050)

Design-year (2050) noise levels were evaluated for the no-build alternative for comparative purposes, as required by PennDOT/FHWA procedures and guidelines. Future no-build noise levels are predicted to exceed the NAC at receptor sites within three NSAs identified in the corridor (NSAs 2, 3, and 6).

The future (2050) no-build traffic noise levels are anticipated to increase by approximately 1 to 2 dBA over the current (2016) noise levels at receptors within the project area (**Table 3-9**). This increase is in line with expectations given the relative increases in traffic volumes over time.

### Build Alternative (2050)

Noise impacts were evaluated for each NSA as identified below, summarized in **Table 3-9**, and shown on **Figure 3-28** and **Figure 3-29**. Future noise levels for the build alternative are predicted to exceed the NAC at receptor sites within four of the six NSAs in the corridor (NSAs 2, 3, 4, and 6). Abatement consideration is warranted, and vertical noise barriers were designed and evaluated in the model.

Noise abatement must consider both the feasibility and reasonableness of potential mitigation. Feasibility addresses the ability of a noise wall to perform acoustically (reduce traffic noise) while considering issues of constructability, safety, maintenance of vehicular and pedestrian access, and potential conflicts with utilities or drainage features. Reasonableness incorporates an analysis of cost-benefit as well as additional acoustical performance requirements. Noise barriers were identified as both feasible and reasonable for two NSAs (NSAs 2 and 3) and are shown on **Figure 3-28**. Ultimately, the desires of the affected residents and public are incorporated into the analysis as part of a public outreach process during final design.

#### *NSA 1 – Residential Area North of Lowther Street, West of Maple Street*

Future design-year worst-case noise levels are projected to range from 59 to 65 dBA. Based on the noise modeling results, design-year noise levels are predicted to increase between 2 to 3 dBA, as compared to existing (2016) conditions. All receptors evaluated in NSA 1 are predicted to remain below the PennDOT/FHWA NAC for Activity Category B land uses; therefore, noise abatement consideration is not warranted.

***NSA 2 – Residential Area along Lowther Street, between Maple and S. 3rd Street***

Future design-year worst-case noise levels are projected to range from 65 to 75 dBA, increasing between 2 to 4 dBA, as compared to existing conditions. Seven modeling sites (2-1, 2-2, 2A, 2B, 2C, 2E, and 2F), representing 16 residences, are predicted to approach or exceed the NAC, warranting consideration of abatement. A noise barrier was evaluated for the impacted sites. A 943-foot-long noise barrier, ranging from 12 to 20 feet high, would provide benefits to 9 residences. The preliminary analysis shows the option is both reasonable and feasible, and is recommended for additional consideration during final design.

***NSA 3 – Residential Area East of S. 3rd Street, between Lowther and Walton Streets***

Future design-year worst-case noise levels are projected to range from 62 to 73 dBA, increasing between 1 to 3 dBA, as compared to existing conditions. Eight modeling sites (3-1, 3-2, 3-3, 3A, 3B, 3F, 3G and 3-H), representing 31 residences, are predicted to approach or exceed the NAC, warranting consideration of abatement. A noise barrier system was evaluated for the impacted sites, consisting of two overlapping sections that are spaced to accommodate drainage. One section is approximately 400 feet, and the second section is approximately 1,500 feet. The barrier system has a total wall length of 1,994 feet and ranges from 12 to 20 feet in height, and would provide benefits to 34 residences. The preliminary analysis shows the option is both feasible and reasonable, and is recommended for additional consideration during final design.

***NSA 4 – Residential Area West of 3rd Street, between Plum Street and Herman Avenue***

Future design-year worst-case noise levels are projected to range from 57 to 66 dBA, increasing between 2 to 3 dBA, as compared to existing conditions. One modeling site (4-1), representing three residences, is predicted to approach or exceed the NAC, warranting consideration of abatement. A noise barrier was evaluated for the impacted site. A barrier option was found to be feasible (can physically be constructed and achieve noise abatement goals) but not reasonable (exceeds cost-benefit thresholds) as it only benefited three residences. The noise barrier is not recommended for further consideration.

***NSA 5 – Residences and Recreation Area East of 3rd Street, between Plum and Peach Streets***

Future design-year worst-case noise levels are projected to range from 55 to 62 dBA, increasing up to 2 dBA, as compared to existing conditions. The revised southbound I-83 ramp to S. 3rd Street would add a fill slope that shields structures within the NSA. All receptors are predicted to remain below the NAC; therefore, noise abatement consideration is not warranted.

***NSA 6 – Residences and Recreational Area near Bridge within Shipoke Neighborhood***

Future design-year worst-case noise levels are projected to range from 56 to 66 dBA, increasing up to 2 dBA, as compared to existing conditions. One modeling site (6A; Greenbelt Trail), representing an equivalent 2.2 residences, is predicted to approach or exceed the NAC, warranting consideration of abatement. A noise barrier was evaluated, but no configuration was able to achieve the 5 dBA necessary reduction for at least one site, and is therefore not feasible. The evaluated noise barrier is not recommended for further consideration.

***NSA 7 – Shipoke Residences between Front Street and Race Street, North of I-83***
This NSA represents approximately 150 residences. Future design-year worst-case noise levels range from 58 to 62 dBA, increasing 2 to 6 dBA over existing conditions. All receptors are predicted to remain below the NAC; no noise abatement is warranted.

***NSA 8 – Shipoke Playground at Race and Conoy Streets, North of I-83***
Future design-year worst-case noise level is predicted to be 60 dBA, increasing 6 dBA over existing conditions. This receptor is predicted to remain below the NAC; no noise abatement is warranted.

***NSA 9 – Capital Area Greenbelt Trail South of I-83***
Future design-year worst-case noise level is predicted to be 63 dBA, increasing 2 dBA over existing conditions. This receptor is predicted to remain below the NAC; no noise abatement is warranted.

***Future Noise Planning***
Local officials will be informed of ways to prevent future highway traffic noise impacts on currently undeveloped lands in accordance with PennDOT Publication 24 (2019), Section 6.2. Undeveloped lands would approach the Activity Category B NAC (66 dBA) at a distance of 400 feet from the highway west of the proposed South Bridge, and 350 feet from the highway east of the bridge. Future design-year noise levels would approach Activity Category E (commercial/industrial) NAC of 71 dBA at a distance of 200 feet from the edge of shoulder west of the bridge; no future noise impacts are predicted east of the bridge.

## 3.6.4 Mitigation

The following mitigation measures would be implemented to mitigate potential adverse noise impacts:

- Continue the assessment of abatement options for NSAs 2 and 3 (as shown in the green dashed lines on **Figure 3-28**) through the Final Design phase of the project; this detailed analysis is necessary to incorporate the refined roadway and grading design and account for potential changes, as well as to confirm the results of the preliminary engineering noise analysis
- Solicit input from the benefitted receptors on their desire for or against proposed abatement features; should the proposed barrier be approved by the public, conduct a vote with the benefitted receptors on the aesthetic for the residential side of the barrier
- Notify the public prior to scheduled nighttime construction activities
- Inform local officials of ways to prevent future highway traffic noise impacts on currently undeveloped lands in accordance with PennDOT Publication 24 (2019), Section 6.2

# 3.7 Hazardous and Residual Waste

## 3.7.1 Introduction/Methods

Multiple reports evaluating project area contaminated sites were prepared for this project. Phase I Environmental Site Assessments (ESA) were performed to identify waste sites of concern that have the potential to adversely affect this project. A Phase I ESA was prepared for the project area from Lemoyne to the bridge abutment on the east shore. The viaduct east to Cameron Street and the Front Street/2nd Street interchange were evaluated as part of the ESS3 Project ESA. The assessments were performed in accordance with PennDOT's *Waste Site Evaluation Procedures Handbook* (PennDOT Publication 281, May 2019). The purpose of the Phase I ESAs is to address the likelihood of environmental contamination.

**Detailed information on the hazardous and residual waste sites in the project study area is summarized in:**

- *Phase I Environmental Site Assessment: S.R. 0083, Section 079, Volumes 1-3* (July 2019)
- *Phase I Environmental Site Assessment: S.R. 0083, Section 094 John Harris Memorial (South) Bridge Project* (March 2021)
- *Phase II/III Environmental Site Assessment Report: S.R. 0083, Section 079* (April 2021)

The Phase I ESAs consist of background research on the historical and current use of properties in the study area to identify potential areas of environmentally regulated substance release(s), termed "Areas of Concern" (AOC). The focus of the waste site investigation was to identify properties that contain previously released regulated substances or AOCs that could affect the project or construction planning. The Phase I ESA includes records reviews, interviews, site reconnaissance, compilation of data, data evaluation, and recommendations of further analyses to occur during future design stages such as Phase II and Phase III identification activities that would identify the presence and characterization of potential contaminated soils and groundwater. The ESS3 Project was advanced into final design, and Phase II/III investigations were completed to determine the presence or absence of underground storage tank (UST) system components and to collect soil and groundwater samples for analysis on the properties to be acquired in full for the project. The report provided recommendations for addressing USTs and soil contamination where found. Additional Phase II/III work is ongoing or will be conducted in final design as necessary for the I-83 South Bridge project area.

## 3.7.2 Affected Environment

Almost 150 records were identified within a standard search radii from the project footprint (ranging from 1/8 to 1 mile) for federal and state databases. Many records are duplicates. Eight sites on the west shore and 11 sites on the east shore were identified for additional review and study (including site reconnaissance and site interviews), based on their proximity to the project study area. See **Figure 3-30** and **Figure 3-31** for west shore and east shore property locations, respectively. See **Table 3-10** and **Table 3-11** for a summary of findings for the west shore and east shore, respectively. Site details, including photographs and figures, can be found in the *Phase I Environmental Site Assessment Reports* (March 2021 and July 2019).

**Figure 3-30. Waste Sites of Potential Concern, West Shore**



**Figure 3-31. Waste Sites of Potential Concern, East Shore**

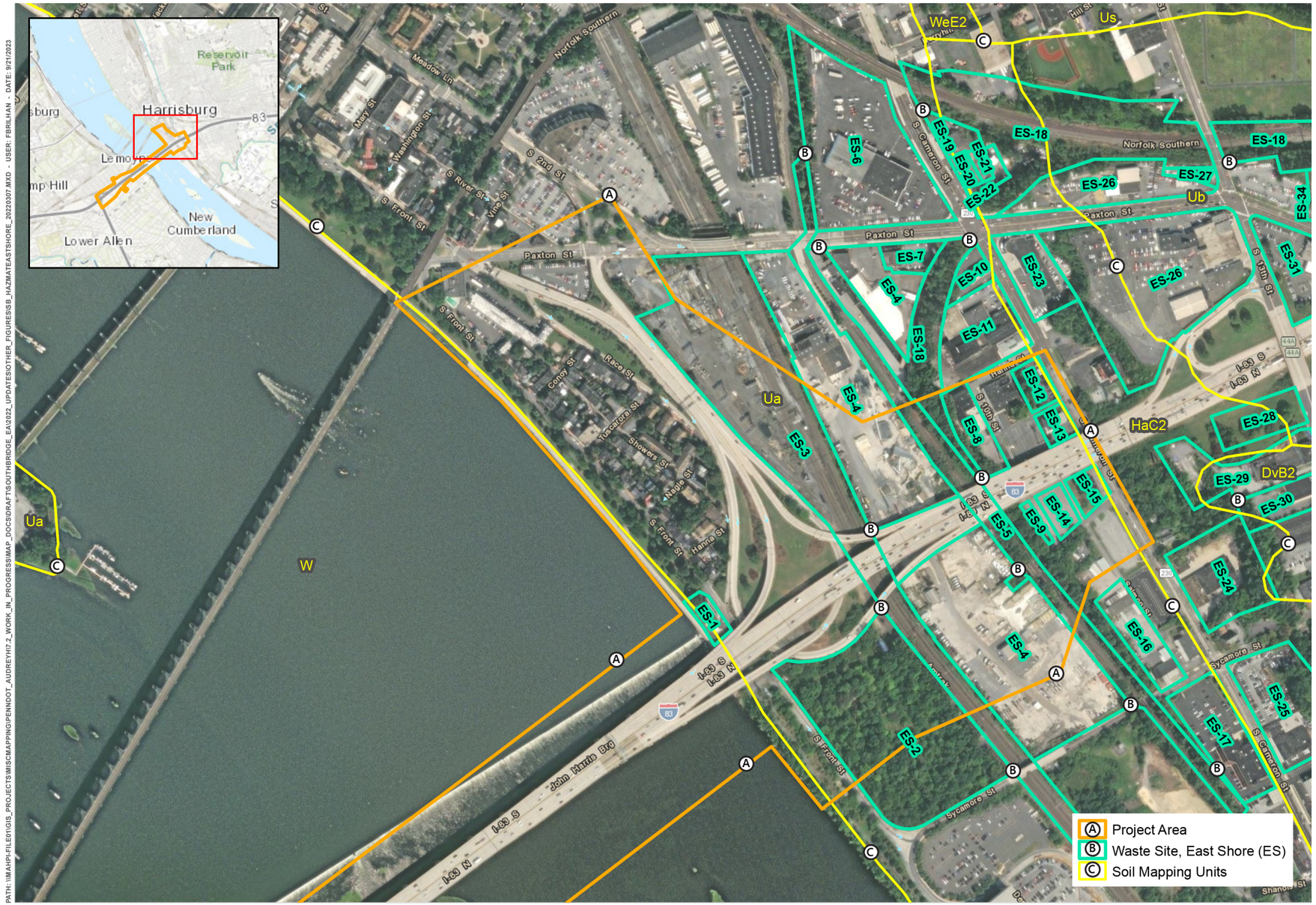

**Table 3-10. Waste Sites of Potential Concern, West Shore[a,b]**

| Waste Site ID# | Site Name | Site Description | Potential Impacts/Recommendation |
|---|---|---|---|
| WS-1 | Norfolk Southern Railroad | This site is an active railroad. Commonly reported contaminants associated with normal use of a rail corridor include: arsenic, lead, petroleum products, coal ash from engines, creosote from rail ties, and polycyclic aromatic hydrocarbons (PAH) from diesel exhaust. Electrical components related to power transmission and communications could include equipment containing polychlorinated biphenyls (PCB). Herbicides for vegetation control were typically used throughout the railroad corridor.<br>Selenium was detected in groundwater nearby (WS-2) and may have migrated into the rail corridor. | Excavation for the proposed exit ramp crossing the railroad, and excavation between the railroad corridor and I-83 may impact WS-1.<br>Recommendations:<br>• Conduct a Phase III ESA at the proposed abutments crossing over the railroad tracks<br>• Develop a Field Sampling Plan prior to the initiation of field activities |
| WS-2 | Former Firestone Motors Site | This site is currently a salvage yard for used concrete and other construction materials, and heavy vehicles are repaired and maintained on the site. Historically, the site was used as an automobile salvage yard since the 1950s. Stored vehicles have the potential to leak various motor oils, fluids, and petroleum products onto the exterior ground surface.<br>Records identify an underground storage tank (UST) containing gasoline and multiple aboveground storage tanks (AST) storing waste oil and heating oil, as well as 20 to 30 55-gallon drums for waste oil and automobile fluids formerly on the site.<br>Arsenic, benzo(a)pyrene, and lead was detected in site soils, and selenium was detected in site groundwater above non-residential Act 2 standards. An Environmental Covenant (EC) prohibits the use of groundwater for any purpose other than monitoring, restricts the property to non-residential land use, and requires maintenance of an asphalt and gravel soil cap covering most of the property. Any excavation into this cap must be conducted in accordance with the site's Soil Management Plan. The EC also requires PADEP notification of any changes in land use or ownership. | Excavation for the proposed exit ramp crossing the railroad and excavation for proposed drainage pipes may impact WS-2.<br>Recommendations:<br>• Conduct a Phase II ESA to identify any USTs within or adjacent to the exit ramp project area<br>• Conduct a Phase III ESA at the location of the proposed abutment and drainage pipes<br>• Develop a Field Sampling Plan prior to the initiation of field activities; ensure that Phase III investigation activities are consistent with the property's Soil Management Plan |

| Waste Site ID# | Site Name | Site Description | Potential Impacts/Recommendation |
|---|---|---|---|
| WS-3 | SE Corner of Susquehanna Court and Lowther Street | This site is currently a vacant property but was historically a quarry. The potential exists for chemicals that may contaminate local soil and groundwater.<br>PAH was detected in site soils above Residential Act 2 standards, although a previous site characterization determined that the potential for adverse health effects to any residents or construction personnel was within acceptable potential risk benchmarks. | Excavation for the proposed exit ramp crossing the railroad and excavation for proposed abutments and piers may impact WS-3. Geotechnical work and excavation activities may encounter historical fill.<br>Recommendations:<br>• Conduct a Phase III ESA at the location of the proposed roadway, abutments, and piers<br>• Develop a Field Sampling Plan prior to the initiation of field activities |
| WS-4 | Hess 38419 | WS-4 is currently vacant but has historically been a gasoline fueling station since the 1940s.<br>The site formerly had six USTs containing gasoline and heating oil that were removed. Four other USTs containing gasoline that were identified in historical maps but not identified by records may be present. It is typical for petroleum contaminated subsurface media to be associated with UST sites. | Excavation for proposed drainage pipes may impact WS-4.<br>Recommendations:<br>• Conduct a Phase II ESA to identify undocumented USTs within or adjacent to the project area<br>• Conduct a Phase III ESA at the location of the proposed drainage pipes<br>• Develop a Field Sampling Plan prior to the initiation of field activities |
| WS-5 | Turkey Hill 91 | WS-5 is currently a gasoline station and has likely been a gasoline station since the 1980s.<br>One 10,000-gallon gasoline UST is currently operated on the site, and another is registered as temporarily out of service. Two USTs containing gasoline were closed in 1993. It is typical for petroleum contaminated subsurface media to be associated with UST sites and for the structural integrity of USTs and associated piping to be compromised over time. | Excavation for proposed drainage pipes may impact WS-5.<br>Recommendations:<br>• Conduct a Phase III ESA at the location of the proposed drainage pipes<br>• Develop a Field Sampling Plan prior to the initiation of field activities |

| Waste Site ID# | Site Name | Site Description | Potential Impacts/Recommendation |
|---|---|---|---|
| WS-6 | Lemoyne Wastewater Treatment Plant | WS-6 is currently a municipal property that contains a wastewater treatment facility and a storage and operations area for the borough's highway department. The site was formerly a limestone quarry. The potential exists for waste or historical fill to be located within the former quarry. Chemicals of concern could vary widely. Two ASTs containing ferrous sulphate and two ASTs containing chlorine were located within the wastewater treatment facility, and potentially an AST containing waste oil was located. Two 55-gallon drums for new and used motor oil are located on the site. WS-6 is located adjacent to WS-1 and WS-2. Selenium was detected in site groundwater at WS-2, and migration of this or other contamination from WS-2 to WS-6 is possible since groundwater flows northeast.<br>The Lemoyne Wastewater Treatment Plant has a sewage outfall discharging to the Susquehanna River upstream of the South Bridge. | Excavation for the proposed abutment associated with a roadway crossing spanning the railroad may impact WS-6.<br>Recommendations:<br>• Conduct a Phase III ESA at the proposed abutments crossing over the railroad tracks<br>• Develop a Field Sampling Plan prior to the initiation of field activities |
| WS-7 | Lemoyne Mobil 41 | WS-7 is currently a fast food restaurant but was formerly an automobile service and gasoline fueling station. Vehicles and maintenance operations have the potential to leak various motor oils, fluids, and petroleum products onto the exterior ground surface.<br>Five USTs were formerly operated on the site containing gasoline, used oil, and heating oil. Records identify an intention to remove and close the USTs, but no closure report has been found. | Excavation for proposed drainage pipes may impact WS-7.<br>Recommendations:<br>• Conduct a Phase II ESA to identify any USTs within or adjacent to the project area<br>• Conduct a Phase III ESA at the location of the proposed drainage pipes<br>• Develop a Field Sampling Plan prior to the initiation of field activities |

| Waste Site ID# | Site Name | Site Description | Potential Impacts/Recommendation |
|---|---|---|---|
| WS-8 | Lemoyne Mart | WS-8 is currently a gasoline fueling station and has been a gasoline fueling station since the 1970s. The site was formerly a garage and tin shop in the early 1900s. This site has four USTs in operation containing gasoline and diesel fuel. Soil samples taken during 2011 and 2018 investigations in response to petroleum product releases did not identify any contamination on the site. One monitoring well is present on the site. | No project impacts within or adjacent to WS-8 are proposed. No further action is recommended. |

[a] See Table 1 of the *Phase I Environmental Site Assessment* (March 2021) for additional site details.
[b] Table 3-10 provides recommendations of Phase I ESA. Actual mitigation will be based on results of Phase II/III investigations.
WS = Waste Site. For this table, the prefix also references the location on the *west* shore of the Susquehanna River.

**Table 3-11. Waste Sites of Potential Concern, East Shore[a,b]**

| Waste Site ID# | Site Name | Site Description | Potential Impacts/Recommendation |
|---|---|---|---|
| ES-1 | Front Street Pump Station | This was the site of a pump station for the City of Harrisburg. A UST was previously on site. Known petroleum leaks were identified and cleaned up. The Front Street Pump Station has a sewage outfall discharging to the Susquehanna River upstream of the South Bridge. | Project may excavate up to 2 feet below ground surface (bgs) for sidewalk upgrades. Recommendations:<br>• No additional work required |
| ES-2 | Phoenix Associates Property | This now vacant property was formerly an iron and steel manufacturing facility for 100 years. Records document that the site had potential for arsenic, lead, and thallium pollution caused by prior site use. Phase III investigations indicate that soils exceed clean fill limits. The site has impacted groundwater at 20 feet bgs. Spill/release evidence was observed. | A partial acquisition and excavation for the proposed ramps may impact ES-2. Recommendations:<br>• Conduct Phase III (complete)<br>• Collect additional samples to delineate lead contamination<br>• If stormwater BMPs are considered, additional sampling is required<br>Special provisions include transportation, handling, and disposal of regulated fill and residual waste; treatment of contaminated groundwater; and transportation, handling, and disposal of contaminated groundwater. |

| Waste Site ID# | Site Name | Site Description | Potential Impacts/Recommendation |
|---|---|---|---|
| ES-3 | Amtrak Crossing | This site is currently and historically a railroad. Commonly reported contaminants associated with normal use of a rail corridor include arsenic, petroleum products, coal ash from engines, creosote from rail ties, and PAH from diesel exhaust and asbestos. Electrical components related to power transmission and communications could include equipment containing PCBs. Herbicides for vegetation control were typically used throughout the railroad corridor. | Excavation depths up to 10 feet bgs for ramp upgrades immediately west of site.<br>Recommendations:<br>• If excavation extends past the PennDOT right-of-way, conduct a Phase III |
| ES-4 | Pennsy Paxton Street | This site was historically a gas station and has the potential for petroleum subsurface soils and waters associated with USTs. This site was also an automobile repair facility, which would have new and used oils, grease, and chemicals stored on site that could potentially leak.<br>There are no records of spills, releases, or known contamination. | A partial acquisition of this property may be required for pier installation.<br>Recommendations:<br>• Conduct a Phase III ESA at the proposed piers that would be installed |
| ES-5 | Amtrak 2nd Crossing | This site is currently and historically a railroad. Commonly reported contaminants associated with normal use of a rail corridor include arsenic, petroleum products, coal ash from engines, creosote from rail ties, and PAH from diesel exhaust and asbestos. Electrical components related to power transmission and communications could include equipment containing PCBs. Herbicides for vegetation control were typically used throughout the railroad corridor. | No excavation planned; no impacts.<br>Recommendations:<br>• No further action required at this time |
| ES-8 | Savannah's on Hanna | This site is currently a nightclub, and historically an automobile repair facility, which would have new and used oils, grease, and chemicals stored on site. | No excavation planned; no impacts.<br>Recommendations:<br>• No further action required at this time |

| Waste Site ID# | Site Name | Site Description | Potential Impacts/Recommendation |
|---|---|---|---|
| ES-9 | Former Berkleys Garage | This undeveloped site was historically an automobile repair facility, which would have new and used oils, grease, and chemicals stored on site that could potentially leak.<br>There are no records of spills, releases, or known contamination. | Temporary construction easement would be needed to construct the viaduct. A partial acquisition of this property would be needed to accommodate a stormwater pipe.<br>Recommendations:<br>• Conduct a Phase III ESA at the proposed piers that would be installed |
| ES-12 | Car In Car Out | This site is currently and historically an automobile dealership. Stored vehicles have the potential to leak fluids, oils, and petroleum products. No known releases are recorded on site. | No excavation planned; no impacts.<br>Recommendations:<br>• No further action required at this time |
| ES-13 | Dobson Properties Sales & Rentals | This site was historically an automobile repair facility, which would have new and used oils, grease, and chemicals stored on site that could potentially leak. | Piers for the new viaduct may require a partial acquisition of this property.<br>Recommendations:<br>• Conduct a Phase III ESA at the proposed piers that would be installed |
| ES-14 | Former Kochenour H Revere Garage | This undeveloped site was historically an automobile repair facility, which would have new and used oils, grease, and chemicals stored on site that could potentially leak. | Temporary construction easement would be needed to construct the viaduct. A partial acquisition of this property would be needed to accommodate a stormwater pipe.<br>Recommendations:<br>• Conduct a Phase III ESA at the proposed piers that would be installed |
| ES-15 | Former Mark Cleaners | This site was historically a gas station and has the potential for petroleum subsurface soils and waters associated with USTs. This site was also historically a dry-cleaning facility, which would have used perchloroethylene. | Piers for the new viaduct structure would be installed on the site. This property is being acquired for utility relocation as part of the first construction contract of the ESS3 Project.<br>Recommendations:<br>• Conduct a Phase III ESA |

Note: Waste Site IDs are noted within this document as WS (Waste Site); however, they are presented here as ES (east shore) to distinguish from the overlapping numbering scheme with the west shore report.
[a] See the *Phase I Environmental Site Assessment* (March 2021) and *Phase II/III Environmental Site Assessment Report* (April 2021) for additional details about each site.
[b] Table 3-11 provides recommendations of Phase I ESA. Actual mitigation will be based on results of Phase II/III investigations.

Geology influences the fate and transport of released petroleum products or other chemicals. The project area terrain is relatively flat within Lemoyne, and surface water and groundwater are expected to flow in a northeasterly direction, towards the Susquehanna River. Soils within the preliminary disturbance footprint include urban (Ub) lands, which are likely composed of transported materials for the existing development; pit/quarry (Pt), which are areas excavated for sand or gravels that may have been filled; and Hagerstown silt loam (HcC), which is well-drained.

There are two wastewater treatment plants in the project area – the Lemoyne Borough Wastewater treatment plan on the east shore and the Front Street Sewage Pumping Station on the west shore. Both have permitted discharge points on the Susquehanna River upstream of the South Bridge.

The project area terrain is also relatively flat on the Harrisburg (east shore) side, and surface waters drain towards the Susquehanna River and Paxton Creek. Project area disturbances are primarily on urban (Ub) lands and limestone materials (Ua), transitioning to well-draining Hagerstown silt loam (HaC2) around Cameron Street.

Bridge structures can sometimes contain asbestos-containing materials. The demolition of a structure that contains asbestos can require asbestos and hazardous material mitigation prior to demolition. According to an inspection report completed in 2007, the South Bridge does not have asbestos containing material. Sampling performed along the viaduct structure and ramps did not identify any asbestos-containing materials or lead-based paints. The S. 3rd Street Bridge is unlikely to have asbestos-containing materials due to its more recent age; it would be inspected prior to removal.

## 3.7.3 Environmental Consequences

### No-build Alternative

Under the no-build alternative, appropriate containment, disposal, and worker safety measures would be employed during maintenance and repair activities. No impacts would be expected.

### Build Alternative

The I-83 South Bridge Project is anticipated to result in impacts associated with excavation of potentially contaminated soils. Additional analysis is recommended for 7 of the 8 waste sites of potential concern on the west shore in Lemoyne (see **Table 3-10** and **Figure 3-30**) and recommended for 6 of the 11 potential waste sites on the east shore in Harrisburg (see **Table 3-11** and **Figure 3-31**). During final design, Phase II and III identification activities would identify the presence and characterization of potential contaminated soils and groundwater. If required, a Phase II ESA would supplement the Phase I ESA with nonintrusive investigations or soil sampling using manually powered equipment. Should contamination be identified, a Phase III ESA would be performed. A Phase III ESA is an intrusive investigation of soil or groundwater, using powered equipment, to identify and characterize potential releases of regulated substances to soil and groundwater identified in Phase I and II investigations. This succession of more narrowly focused investigations proceeds based on the previous findings of earlier phases or as specific concerns

arise. These efforts would determine appropriate mitigation measures required during construction and maintenance activities to avoid and minimize impacts as well as address any necessary remediation activities.

A Phase III investigation has been completed already for ES-2, and identifies special provisions for handling and transport of excavated soils and water.

The build alternative anticipates construction activities within WS-2, which has an Environmental Covenant (EC) that restricts use and impacts on groundwater and requires the maintenance of a cap on the property. Coordination with PADEP would be required to address any land acquisition changes, and examine potential operations needs under the EC. Should buildings or structures be acquired, tests for asbestos-containing materials and lead-based paints, among other factors, would be evaluated.

### 3.7.4 Mitigation

Further investigations, including Phase II/III ESAs will be conducted to inform final design. The following measures to address potential hazardous and residual waste effects were recommended based on findings of the Phase I ESA. Actual mitigation activities will depend on results of the Phase II/III ESAs:

- Perform asbestos-containing materials and lead-based paint surveys for the demolition of any buildings or structures to identify appropriate worker safety, handling, and disposal procedures
- Include a plan for remediation of contaminated areas, if contamination is identified in the study area, in the Phase III assessment report
- Coordinate with PADEP prior to any activities impacting WS-2, in accordance with its EC, and comply with the EC during right-of-way acquisition and construction
- Prepare and implement special provisions for ES-2 during construction
- Ensure the contractor:
    - Prepares and follows a Waste Management Plan and Site Specific Health and Safety Plan
    - Prepares a Preparedness, Prevention and Contingency Plan to address releases of hazardous materials during construction as well as procedures and measures to remove and properly dispose of materials resulting from the demolition of the existing South Bridge
    - Conducts fill determinations of soils not used within the project corridor to ensure proper handling, transport, and disposal of soils
    - Properly disposes contaminated soils at permitted waste facilities

# 3.8 Cultural Resources

## 3.8.1 Introduction/Methods

The proposed project was evaluated to determine its effects on resources listed in or determined eligible for listing in the National Register of Historic Places (NRHP). Federal and state requirements for evaluating cultural resources include: the U.S. Department of Transportation Act of 1966, as amended in 1968; 23 CFR 771, Environmental Impact and Related Procedures, as amended; Section 106 of the National Historic Preservation Act (NHPA) of 1966, as amended; the Procedures for the Protection of Historic Properties set forth in 36 CFR 800, as amended; guidance published by the Advisory Council on Historic Preservation (ACHP); USACE regulations set forth in 33 CFR 325, Appendix C; Sections 1(3) and 2(b) of EO 11593; NEPA of 1969, as amended; the Commonwealth of Pennsylvania State Act Number 1978-273, amended as Act Number 1988-72; and the Archaeological and Historic Preservation Act of 1974. These laws and regulations require that the effects of any federal- or state-assisted undertaking on historically significant buildings, structures, districts, objects, or sites (or historic properties) be taken into account during the project planning process. The regulations require the federal agency to consult with the State Historic Preservation Office (SHPO). In Pennsylvania, the SHPO is the Pennsylvania Historical and Museum Commission (PHMC); therefore, the PHMC will be used when discussing the SHPO throughout the remainder of the document.

**Detailed information on the cultural resources analyses is presented in:**

- *Determination of Effect Report: Interstate 83, Section 079 Widening and Reconstruction* (February 2019)
- *Archaeological Testing Status Update for Areas A, B, and C, I-83 Reconstruction East Shore, Section 3 Project* (August 2020)
- *Phase IB Archaeological Survey Report, I-83 Reconstruction East Shore, Section 079 Project* (October 2020)
- *S.R. 0083, Section 094, John Harris Memorial (South) Bridge Replacement, Reconnaissance Survey* (December 2020)
- *Phase IB Archaeological Survey Report, I-83 Reconstruction East Shore, Section 3 Project* (February 2021)
- *S.R. 0083-094 John Harris Memorial (South) Bridge: Negative Survey Report* (April 2021)
- *S.R. 0083-094 John Harris Memorial (South) Bridge Project: Determination of Effects Report* (June 2021)
- *PennDOT Section 106 Effects Finding Forms – PATH* (March 2019, April 2021, August 2021)[37]
- *I-83 South Bridge PATH Posting* (March 2022)
- *I-83 South Bridge PATH Project Overview Report* (accessed September 2023)

A historic property is defined in the NHPA (54 U.S.C. 300308) as any "prehistoric or historic district, site, building, structure, or object included in, or eligible for inclusion in, the National Register of Historic Places, including artifacts, records, and material remains related to such a property or resource."

[37] The PATH web pages for the I-83 South Bridge and ESS3 Projects are https://path.penndot.gov/ProjectDetails.aspx?ProjectID=58554 (March 2022) and https://path.penndot.gov/ProjectDetails.aspx?ProjectID=48037 (December 2022), respectively. Links to pertinent documents are included in **Appendix H**.

The Area of Potential Effect (APE) for a proposed undertaking is defined in 36 CFR 800.16(d) as "…the geographic area or areas within which an undertaking may directly or indirectly cause alterations in the character or use of historic properties, if any such properties exist." The APE for this proposed project includes areas containing NRHP-listed or eligible properties whose character and/or setting could be directly, indirectly, or cumulatively affected by the proposed undertaking. All potential impacts were considered during development of the APE. The APE for the project is centered on the South Bridge structure, with wider coverage of areas where there may be additional secondary impacts from intersection reconfigurations (**Figure 3-5**). The APE includes areas of right-of-way acquisition and temporary construction easements, as well as areas of potential indirect impacts (e.g., noise, visual, vibration). The APE for the project is an irregularly shaped polygon that considers potential physical, visual, and auditory impacts to historic properties. The area of potential archaeological effects, which is limited to potential direct impacts within the limits of disturbance, is fully contained within the APE for the project.

### 3.8.2 Historic Properties

A historic property is an archaeological or historic resource over fifty years of age that is eligible for or listed in the NRHP.

Reconnaissance survey efforts in fall 2020 resulted in the identification and evaluation of 248 resources within the project APE, including three historic districts/groupings. On April 16, 2021, a representative of the Westover Terrace neighborhood (who was present at the second consulting parties meeting), submitted a response letter to the reconnaissance memorandum for the project. The letter included a request that the Westover Terrace neighborhood be evaluated for NRHP eligibility. In response, a Pennsylvania Historic Resource Survey Form (HRSF), which documented the history of the subdivision and recommended that the Westover Terrace Subdivision was not eligible for the NRHP, was prepared and submitted. This information was made accessible to all consulting parties. On June 15, 2021, the PHMC concurred with this recommendation (see letter in **Appendix C**).

A subsequent expansion of the APE in May 2021 included additional properties in the reconnaissance efforts. Based on the results of the reconnaissance survey, a total of 16 full HRSFs and 6 abbreviated HRSFs were completed as part of the project. The survey also identified five properties that had previously been determined eligible for, or were listed in, the NRHP within the APE. Eight properties have been determined eligible for listing in, or have been listed in, the NRHP (**Figure 3-32** and **Table 3-12**). Although the I-83 South Bridge is more than 50 years in age, it is exempt from review under ACHP's exemption for projects with potential effects to the interstate highway system[38].

[38] ACHP (2005), Exemption Regarding Historic Preservation Review Process for Effects to the Interstate Highway System. *Federal Register* 70(46), March 10, 2005. https://www.achp.gov/sites/default/files/exemptions/2017-01/final_interstate_exemption_notice.pdf

**Figure 3-32. Historic Properties in the APE**

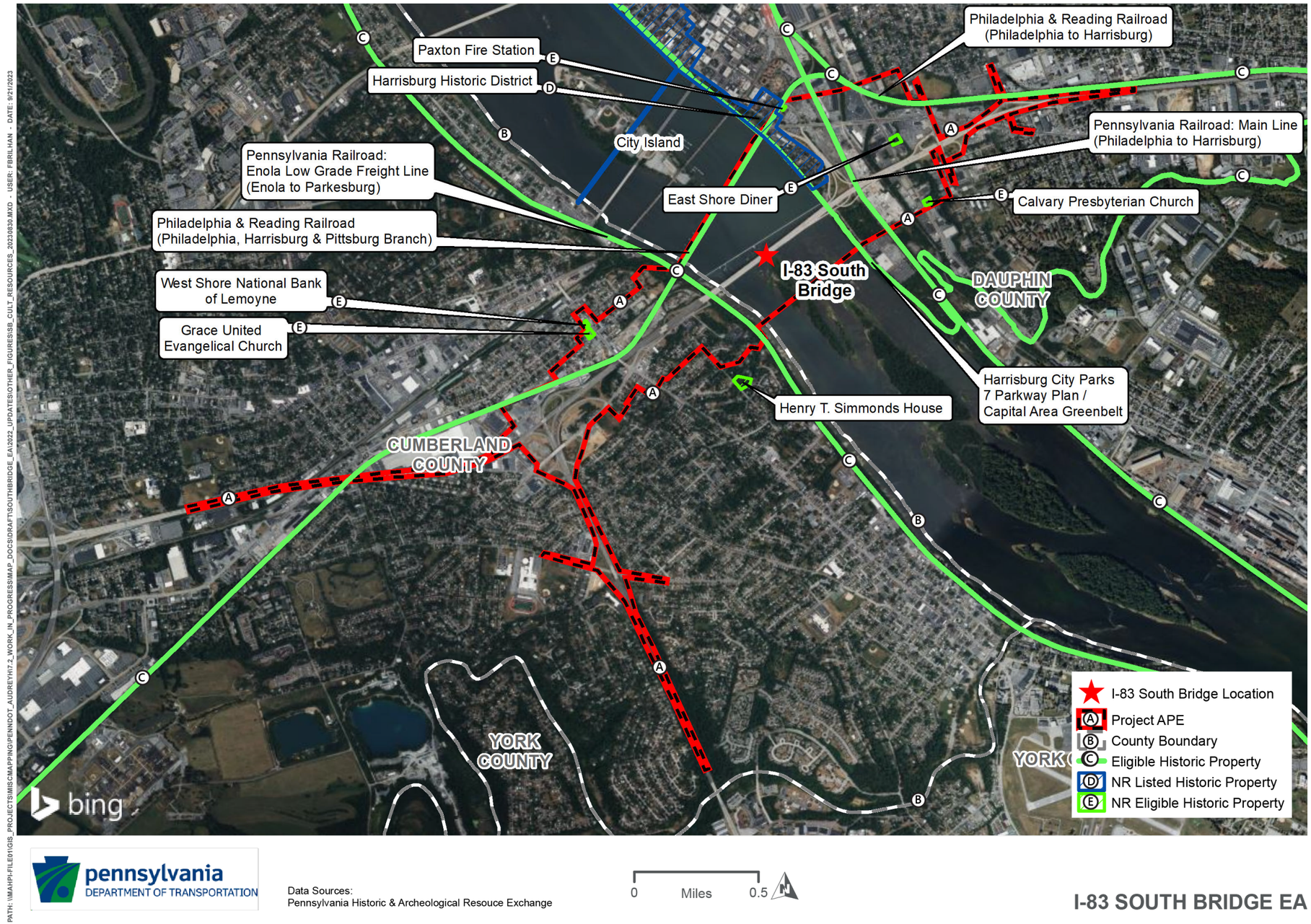


Source: *S.R. 0083-094 John Harris Memorial (South) Bridge Project: Updated Above Ground APE* (March 2022)

**Table 3-12. Determination of Effect for Listed and Eligible Historic Properties in the APE**

| Property Name | Address | Year Built | NRHP Eligibility | Determination of Effect |
|---|---|---|---|---|
| Harrisburg Historic District | Between South Front Street and Race Street south of Paxton Street | Various | Listed | No Adverse Effect (I-83 South Bridge) |
| Pennsylvania Railroad: Enola Branch Low Grade Freight Line (Enola to Parkesburg) | West Bank Susquehanna River | 1902/1906 | Eligible | No Adverse Effect |
| Pennsylvania Railroad: Main Line (Philadelphia to Harrisburg) | Between the East Bank Susquehanna River and Cameron Street | 1846/1854 | Eligible | No Adverse Effect |
| Harrisburg City Parks 7 Parkway Plan / Capital Area Greenbelt | East Bank Susquehanna River | 1903 | Eligible | No Adverse Effect |
| West Shore National Bank of Lemoyne | 300 Hummel Avenue | 1930 | Eligible | No Effect |
| Philadelphia & Reading Railroad (Philadelphia, Harrisburg & Pittsburg Branch) | Between I-83 and Plum Street | 1871/1891; 1924 | Eligible | No Adverse Effect |
| Grace United Evangelical Church | 309 Herman Avenue | 1934 | Eligible | No Effect |
| Henry T. Simmonds House | 1811 Warren Street | Circa 1957 | Eligible | No Effect |
| Calvary Presbyterian Church | 1079 S. Cameron Street | 1887 | Eligible | No Effect |
| East Shore Diner | 711 S. Cameron Street | 1953 | Eligible | No Effect (I-83 South Bridge); No Adverse Effect (ESS3); diner was relocated as part of ESS3 project and is no longer a historic resource present in the South Bridge project area |
| Harrisburg Historic District | Along the east shore Susquehanna River in southern Harrisburg | Late 1700s to late 1800s | Eligible | No Effect (East Shore Viaduct) |
| Paxton Fire Station | 368 S. 2nd Street | 1937 | Eligible | No Effect |
| Philadelphia & Reading Railroad (Philadelphia to Harrisburg) | East/west alignment through Harrisburg, located adjacent and parallel to I-83 | 1858 | Eligible | No Effect |

Sources: *S.R. 0083-094 John Harris Memorial (South) Bridge Project: Determination of Effects Report*, June 2021; *S.R. 0083-079 Widening and Reconstruction Project: Determination of Effects Report*, February 2019.

Another expansion of the APE occurred in March 2022 when the eastern terminus of the project was moved east to Cameron Street to encompass the viaduct that goes over the Norfolk Southern Railroad, Amtrak, and Paxton Creek and the entire Front Street/2nd Street interchange. The project APE and Archeological Limits of Disturbance (LOD) were expanded to include the East Shore Viaduct reconstruction work that was added to this project's scope (East Shore APE/LOD Expansion). Resource identification, determinations of effect, and mitigation were completed during the Section 106 process for the ESS3 Project, and that information is presented above for historic properties that are included in the expanded APE[39].

As part of the Section 106 process, PennDOT determined, on behalf of the FHWA, that the proposed project activities will have No Effect on seven NRHP eligible properties and No Adverse Effect on five properties. PHMC concurred with these findings (see letters in **Appendix C**). **Table 3-12** summarizes the determination of effect for each historic property in the APE.

### 3.8.3 Archaeological Resources

An archaeological resource is any prehistoric or historic artifact, feature, site, or district that provides information about the human past. An archaeological resource may or may not be eligible for or listed in the NRHP (i.e., historic property).

Three areas within the APE on the west shore of the Susquehanna River were identified as having the potential for archaeological resources. Based on a scoping field view and background research, geomorphological and archaeological investigations were conducted within the area of direct effect. No archaeological sites were found within the area of direct effect as a result of these investigations. A Phase I archaeological survey report (Negative Survey Form) was prepared as documentation (*S.R. 0083-094 John Harris Memorial (South) Bridge Project: Negative Survey Report*, April 2021).

Phase IA and IB archaeological investigations were conducted to investigate three areas of archaeological potential within the APE on the east shore of the Susquehanna River (*Archaeological Testing Status Update for Areas A, B, and C, I-83 Reconstruction East Shore, Section 3 Project* [August 5, 2020]; *Phase IB Archaeological Survey Report, I-83 Reconstruction East Shore, Section 079 Project* [October 2020]; and *Phase IB Archaeological Survey Report, I-83 Reconstruction East Shore, Section 3 Project* [February 23, 2021]). One historic archaeological site was identified; however, the site was determined not eligible for listing in the NRHP. No further archaeological investigation was recommended within the APE.

[39] Also in March 2022, the ESS3 Project APE was reduced to remove the area of the APE that was added to the I-83 South Bridge Project. No concurrence or response from PHMC was required.

## 3.8.4 Consultation

### Consulting Party Coordination

Due to the nature of the project, the number of historic properties located within the APE, and the potential for the project to affect these properties, PennDOT identified parties entitled to be consulting parties and invited them to participate in the Section 106 process. A letter advising of the opportunity to participate was mailed to all residents within the project APE for the west shore and South Bridge areas on February 23, 2021. On March 18, 2021, all interested consulting parties received a digital copy of the project's reconnaissance memorandum and HRSFs.

Two virtual meetings were held with consulting parties. The first was a meeting with the Shipoke Neighborhood Association and a representative of PHMC on March 22, 2021. A second consulting parties meeting was held on March 29, 2021. The meeting was attended by members of the project team, PHMC, and a consulting party/homeowner in Westover Terrace, New Cumberland.

The Section 106 Effects Finding Form was posted to PennDOT's Pennsylvania Transportation and Heritage (PATH) website[40], where it was available for review and comment for 30 days, ending on September 3, 2021; this findings form did not include the east shore APE area. One response was received during the comment period regarding the finding (see Tribal Consultation section). PennDOT's consultation with consulting parties and the PHMC on behalf of FHWA is available on PennDOT's PATH website.

On March 8, 2022, PennDOT notified the consulting parties, via a posting to PATH, of the incorporation of the viaduct and Front Street/2nd Street interchange on the east shore into the I-83 South Bridge Project and associated expansion of the project APE. Resources in the expanded area were assessed as part of the ESS3 Project studies. The above-ground, archaeological, and project findings were not altered because of the updated APE submission. A finding of No Adverse Effect applies to this project. No concurrence was sought on the posting for expanding the study area to include the East Shore Viaduct because consultation was already completed for that part of the study area as part of the ESS3 Project[41].

### Tribal Consultation

PennDOT, on behalf of the FHWA, requested consultation for this project from the following Native American Tribes and Nations: Absentee-Shawnee Tribe of Oklahoma, Cayuga Nation, Delaware Nation, Delaware Tribe, Eastern Shawnee Tribe of Oklahoma, Onondaga Nation, Seneca-Cayuga Nation, Shawnee Tribe, and Tuscarora Nation.

On August 13, 2021, the Tribal Historic Preservation Officer for the Eastern Shawnee Tribe of Oklahoma responded in a letter agreeing with the effect finding and requested to be contacted and

[40] https://path.penndot.gov/ProjectDetails.aspx?ProjectID=%2058554

[41] Also in March 2022, the ESS3 Project APE was reduced to remove the area of the APE that was added to the I-83 South Bridge Project. No concurrence or response from PHMC was required.

that all ground disturbing activities stop in the event of an inadvertent discovery of an archaeological site or objects.

The Delaware Nation and the Delaware Tribe requested consulting party status but did not comment on the effect finding. No other responses were received from consulting Native American Tribes or Nations.

#### PHMC Consultation

A Negative Survey Report documenting the lack of archaeological deposits was submitted to the PHMC on May 11, 2021 (*S.R. 0083-094 John Harris Memorial (South) Bridge Project: Negative Survey Report*, April 2021). On August 2, 2021, PennDOT, on behalf of FHWA, submitted its finding that the project would have No Effect upon archaeological resources to the PHMC.

Also included within the August 2, 2021, submission was PennDOT's finding that the project would have No Adverse Effect upon cultural resources. On August 20, 2021, the PHMC concurred with PennDOT's determination that the project will have No Effect on the Pennsylvania Railroad: Main Line (Philadelphia to Harrisburg), West Shore National Bank of Lemoyne, Grace Evangelical Church, and Henry T. Simmonds House and that the project will have No Adverse Effect on the Harrisburg Historic District, the Pennsylvania Railroad: Enola Branch Low Grade Freight Line (Enola to Parkesburg), Harrisburg City Parks 7 Parkway Plan/Capital Area Greenbelt, and the Philadelphia & Reading Railroad (Philadelphia, Harrisburg & Pittsburg Branch) (see letter in **Appendix C**).

### 3.8.5 Mitigation

There are no impacts to historic or archaeological resources; therefore, no mitigation is required for this project. However, the following will be adhered to:

- Do not permit construction staging within any of the known historic or archaeological properties in the project vicinity
- Immediately stop construction activities in the area of discovery should there be an inadvertent discovery of cultural resources, pending PennDOT/FHWA coordination with the PHMC and Native American Tribes or Nations

## 3.9 Energy

### 3.9.1 Introduction/Methods

This section evaluates energy impacts associated with the I-83 South Bridge Project. For roadway projects, direct energy usage generally focuses on the energy consumed by vehicle propulsion and is a function of traffic characteristics such as miles traveled, speed, vehicle mix, and congestion. Vehicles consume greater amounts of energy in congested conditions, as stop-and-go travel and idling at signals or in congestion is less efficient and uses more energy. A study published by

Transportation Research Board (TRB)[42], indicates a considerable increase in fuel consumption under congested traffic conditions compared with free-flow conditions. In fact, a similar TRB study[43] found that traffic congestion typically led to increased fuel consumption on the order of 80 percent. Additional energy use is associated with lighting and the operation of maintenance and construction equipment. Energy usage can also be correlated to vehicle emissions, and readers should consult **Section 3.5**, Air Quality and Climate Change, for related information.

## 3.9.2 Affected Environment

Currently, congested conditions on I-83 contribute to wasted energy. Traffic analyses prepared for the project found that average speeds in 2018 for northbound travel were 32 mph during the AM peak hour and 23 mph during the PM peak hour. Average speeds for southbound travel were 46 mph during the AM peak hour and 26 mph during the PM peak hour. These slow speeds on the interstate highway are indicative of traffic congestion, stop-and-go traffic flows, and vehicles idling in congested conditions, all of which increase energy use as compared to free-flow conditions.

## 3.9.3 Environmental Consequences

### No-build Alternative

Under the no-build alternative, no capacity would be added to the South Bridge or to the viaduct on the east shore. Area travelers would continue to encounter congestion during peak hours, and traffic operations would continue to deteriorate. Energy usage would increase over time as traffic grows and congestion worsens. As congestion worsens along I-83 in the study area, there would be an increase in trips made in congested conditions on the bridge which means energy usage will also increase. Moreover, it is estimated that eventually the bridge may need to be weight-restricted or even closed. If that were to occur, diverted trips would severely congest local streets which would also increase energy use attributed to that congestion.

Finally, more frequent maintenance on the South Bridge and East Shore Viaduct would also lead to additional energy consumption for maintenance and repair equipment. Inspections and maintenance of the existing bridge would continue to increase in frequency and magnitude, creating impacts to traffic movement in the Harrisburg area due to more frequent lane closures to accommodate maintenance activities. Maintenance-related lane closures would add to congestion during maintenance activities, and detours would add to increased trip lengths and congestion on detour routes, and consequently increased energy use.

[42] TRB. 2015. Measuring the Effects of Traffic Congestion on Fuel Consumption. https://trid.trb.org/view/1337440
[43] TRB. 2008. How Much Does Traffic Congestion Increase Fuel Consumption and Emissions? Applying Fuel Consumption Model to NGSIM Trajectory Data. https://trid.trb.org/view/848721

#### Build Alternative

Under the build alternative, it is anticipated that the increased capacity would reduce congestion and would improve travel speeds and reduce stop-and-go traffic and idling on I-83, resulting in less energy usage associated with congestion as compared to the no-build alternative.

It is also anticipated that maintenance activities under the build alternative would be lower than the necessary maintenance under the no-build alternative (i.e., no improvements made to the existing bridge and viaduct). It is anticipated that energy use during construction would be offset by the benefits to vehicle operations and lower maintenance energy usage over the facility life under the build alternative.

The operational improvements anticipated from the build alternative, along with trends of improved vehicle fuel efficiencies, would result in reduced energy usage overall. **Section 3.5**, Air Quality and Climate Change, has additional information on vehicle usage trends and GHG emissions, which are closely related to the anticipated vehicle-related energy effects.

### 3.9.4 Mitigation

The following measures would be implemented to offset adverse energy effects associated with the I-83 South Bridge Project:

- Construct the South Bridge, viaduct, and S. 3rd Street Bridge off line while maintaining traffic on the existing roadway/bridge to keep traffic moving during construction (reducing congestion associated with construction detours) and reduce the amount of time vehicles would be idling, reducing overall fuel consumption during construction
- Encourage the contractor to implement sustainable materials and construction practices in constructing the project

## 3.10 Construction Impacts

### 3.10.1 Introduction/Methods

This section is a summary of impacts anticipated during construction. These impacts would occur as a result of construction activities and are typically temporary or short term in nature. Because of the size and length of the South Bridge, construction is anticipated to take up to 8 years to complete.

### 3.10.2 Environmental Consequences

#### Surface Water Resources

Because of the shallow depth of the Susquehanna River, bridge construction from barges is not feasible for most of the construction season. Therefore, it is anticipated that construction access for each stage in the river would be via temporary construction bridges (or trestles; see **Figure 2-12** in **Chapter 2**, Alternatives). Four separate temporary construction bridges are proposed. Each temporary bridge would be approximately half the width of the river—two for construction of the

northbound lanes and two for construction of the southbound lanes. It is anticipated that only one of the four temporary construction bridges would be in place at a given time. The temporary construction bridges and piers would be removed upon the project's completion.

Because of limited space, and the railroad tracks running along the west shore, a riprapped earthen work area of approximately 200,000 square feet is proposed in the river for construction vehicles to complete turning movements to access the temporary construction bridges and for constructing the first two permanent piers in the river on the west shore for the new South Bridge. The riprapped work area would extend up to 315 feet into the river at its widest point. On the east shore, there is sufficient space for construction staging so access to the temporary construction bridges can be accomplished without adding fill material in the river[44]. A more detailed description with figures can be found in **Chapter 2**, Alternatives. Temporary impacts to the Susquehanna River are presented in **Section 3.2.3**. Final permitting would be determined in the CWA Section 404 and PADEP Chapter 105 permit.

The footings for the columns of the temporary construction bridges may require drilling into the stream bedrock. The construction and removal of each temporary construction bridge as well as the demolition and removal of the existing South Bridge would have temporary water quality and sedimentation impacts. These issues would be addressed as part of the CWA Section 404 and PADEP Chapter 105 permit.

Construction activities and equipment near waterbodies increase the risk of fuel and chemical leaks and spills reaching the waterbodies. Preparation and adherence to the Preparedness, Prevention, and Contingency (PPC) plan and implementation of the Erosion and Sedimentation Control Plan measures as part of the National Pollutant Discharge Elimination System (NPDES) permit would control temporary construction-related pollution during construction.

### Wetlands

Temporary impacts to wetlands are presented in **Section 3.2.4**. The CWA Section 404/PADEP Chapter 105 permit would address the temporary construction impacts to the wetlands in the Susquehanna River, including the installation, use, and removal of the temporary construction bridges, earthen work area, and access road.

### Floodplains

Temporary water surface elevation increases may occur during construction. The use of temporary construction bridges for construction of the South Bridge was selected to minimize temporary effects on flood hazards as compared to other construction access design options such as rock causeways. The impacts to floodplains during construction are discussed in **Section 3.2.5**, Floodplains and Flood Hazard Areas.

[44] Because the project would be procured through a design-build method, the selected contractor team could suggest a different construction method. The impacts described in the EA are based on the preliminary design and anticipated construction methods. If final design results in a different bridge or construction approach, environmental impacts would need to be re-evaluated.

### Vegetation and Wildlife

SAV and the fish species that inhabit the river would be temporarily affected by construction of the build alternative. The use of temporary construction bridges would maintain fish passage through the work area and to the existing breach locations (notches) in the Dock Street Dam upstream of the South Bridge. Maintaining access to the existing breach points is important for migratory fish passage for upstream spawning (see **Section 3.2.6**, Vegetation and Wildlife).

Submerged (aquatic) vegetation beds affected by construction are anticipated to re-establish naturally without the need for mitigation; however, monitoring before, during, and after construction will be done to ensure re-establishment.

### Invasive Species

Construction and maintenance equipment can spread invasive species if seeds or vegetation adhere to tracks or wheels. However, with adherence to PennDOT's *Invasive Species Best Management Practices* (May 2014), the potential for invasive species impacts is anticipated to be low.

Pennsylvania has established a Spotted Lanternfly quarantine zone that strictly prohibits the movement of any Spotted Lanternfly living stage, including egg masses, nymphs, and adults, and regulates the movement of items that may harbor the insect[45]. Project vehicles, equipment, material, and construction waste entering or leaving the quarantine zone would be considered regulated articles, and the construction contractor would be required to obtain the necessary permit to comply with the PA Department of Agriculture's *Order of Quarantine and Treatment: Spotted Lanternfly* (PA Department of Agriculture 2021).

### Transportation and Travel Patterns

Construction of the project is expected to be completed in approximately 6 to 8 years. Details of construction phasing are outlined in **Chapter 2**, Alternatives. The new northbound lanes would be constructed to the south of the existing South Bridge, allowing traffic to be maintained on the existing bridge. Once the northbound lanes are completed, both northbound and southbound traffic would use the new structure (three lanes in each direction) while the existing bridge is demolished. The new southbound lanes would be constructed within the footprint of the existing bridge. After the southbound lanes are completed, traffic would be redistributed to their final configuration.

The S. 3rd Street Bridge would be constructed off line to the east of the existing structure so traffic can be maintained on the existing bridge during construction. Similarly, the new southbound Exit 41B off ramp into Lemoyne (Ramp X) that connects to S. 3rd Street on the northern side of I-83 would be constructed while traffic is maintained on the existing ramp. Short-term detours would be required to tie the new bridge and new ramp into the existing roadway network. Lowther Street would remain open to traffic throughout construction. Much of the eastern relocation of Lowther Street can be built off line while traffic is maintained on existing Lowther Street.

[45] https://www.agriculture.pa.gov/Plants_Land_Water/PlantIndustry/Entomology/spotted_lanternfly/quarantine/Pages/default.aspx

Warning signs, speed restrictions, and work zone safety measures would be implemented throughout the construction period. Lane closures will likely be required at times when connections are being made and traffic is being redistributed, but these would be scheduled during non-peak hours to the extent possible. Although a similar number of travel lanes will be maintained during the majority of construction and reduced lanes would be targeted for non-peak hours, traffic delays may still increase at times due to reduced speeds, the presence of construction activities nearby, and temporary lane closures. A Traffic Management Plan will be prepared that will include details on communicating with travelers, City of Harrisburg officials, emergency service providers, school districts, and businesses to keep them informed of temporary detour routes, lane closures, and construction timing.

Staging areas will be located within the I-83 right-of-way where possible; however, temporary staging areas will be needed for construction. Construction vehicles would access the temporary construction bridges from the west shore using relocated Lowther Street and the temporary access road and staging area, as discussed above. Residences along Lowther Street would experience increased traffic from these vehicles throughout the phases of construction that would access the bridge area from the west shore.

Access to the temporary construction bridges from the east shore would happen from the relatively flat area in the immediate vicinity of the existing bridge.

### Socioeconomic

During construction, construction contractors would be hired, resulting in a temporary increase in regional economic activity. On-site construction workers are likely to visit local businesses and restaurants. As a result, construction activity is likely to have a short-term, beneficial impact to the local and regional economy.

Recreational users at Lemoyne Memorial Park, Maple Street Park, Shipoke Playground, and Greenbelt Trail may be affected by construction noise. These impacts are expected to be minor and limited in duration. The Greenbelt Trail would remain open; access around the bridge construction would be maintained by routing users to a protected pedestrian route along Front Street.

Because of the proximity to the Dock Street Dam, users of the river are already required to exit the river at City Island. No boating is allowed in and around the Dock Street Dam, which is just upstream of the South Bridge, so effects on boating and river recreation would be minimal. Fishing from the shore in the immediate vicinity of the bridge would be restricted during construction; however, adequate alternative fishing areas are available.

A temporary boat ramp would be established to provide emergency service providers access to the Susquehanna River in the immediate vicinity of the South Bridge and the Dock Street Dam.

A potential project staging area is proposed southeast of the existing bridge and would affect a homeless encampment. As described in **Section 3.3**, Socioeconomic Analysis and Land Use and

**Section 3.13**, Environmental Justice, CACH, in conjunction with the City of Harrisburg and Dauphin County, has indicated their intent to work collaboratively with the community and encampment to address this impact.

Occasional detours or lane restrictions may be needed for relatively short periods during the replacement of the S. 3rd Street Bridge, relocation of the Exit 41B ramp, and re-alignment of Lowther Street. These detours could temporarily increase response times for emergency service providers.

School bus routes may be impacted during construction. PennDOT would develop a Maintenance and Protection of Traffic Plan, which would include coordination with the West Shore School District and the Harrisburg School District, as well as emergency service providers and business owners to address access and detours.

### Transit

Transit operations that use the existing South Bridge will be minimally impacted during construction. Three lanes of traffic will be maintained in both directions during construction of the new structures by using the existing structure while building the replacement bridge south of the existing structure, then routing all traffic to these new lanes while the existing bridge is demolished and new southbound lanes are built where the existing bridge was. Once the new southbound lanes are complete, traffic would be redistributed to five travel lanes in each direction. Impacts to transit operations are not anticipated for S. 3rd Street Bridge, as the existing bridge would remain open for operations while the new bridge is constructed. See **Section 3.3.6**, Transit Systems, for further information.

### Pedestrian and Bicycle Travel

During construction of the replacement S. 3rd Street Bridge in a location immediately east of the existing bridge, the existing S. 3rd Street Bridge would remain open for pedestrian and bicycle use. The S. 3rd Street Bridge currently carries Bike Route J. There could be temporary detours for limited time periods when connections are made between the existing roads and the new bridge.

Sidewalks and intersection pedestrian crossings would be reconstructed and improved to ADA standards along S. 3rd Street and Lowther Street within the project area. A sidewalk would be constructed along the southern side of Lowther Street between S. 3rd Street and its terminus at the Lemoyne Borough wastewater facility on the northern side of I-83.

### Visual

Construction of the project may involve temporary aesthetic impacts within the construction area for bridges, ramps, and intersections. The equipment and materials within staging and storage areas may be visible, particularly by drivers. Construction of the northbound bridge will occur while traffic is maintained on the existing South Bridge, and the south-facing views down the river are likely to be obscured during parts of the construction period. North-facing views may be obscured during existing bridge demolition and construction of the southbound bridge.

Although the Greenbelt Trail would remain open during construction, the protected temporary trail route along Front Street would be constrained with barriers and screening for the area under the bridge.

### Air Quality

Temporary air quality impacts may occur in the project area during construction activities. Heavy equipment and vehicle travel to and from the site would produce emissions during construction of this project. Construction emissions would be short term or temporary in nature. All construction activities will be performed in accordance with 25 PA Code Article III (Chapters 121–145, Air Resources) to ensure adequate control measures for emissions are in place.

Concrete and asphalt batch plants may be located within the project vicinity during construction and may have temporary air quality impacts. In addition, structure demolition, earthmoving, and ground-disturbing operations would generate airborne dust. Impacts will be minimized through adherence to accepted construction site air quality control measures in the handling of materials. Examples of BMPs for fugitive dust control include water spraying, washing vehicles prior to leaving construction zones, and covers on vehicles transporting dust-emitting materials.

### Noise

The use of heavy machinery and construction techniques may cause temporary impacts to noise-sensitive land uses located in close proximity to construction work zones and staging areas. Existing traffic noise levels are high throughout the I-83 South Bridge Project corridor due to substantial influence from heavy trucks and high traffic volumes. The temporary construction noise levels are anticipated to be minimal in comparison (see *Preliminary Engineering Noise Analysis Report*, April 2022).

The majority of road and bridge construction activities will be scheduled during daytime hours; however, some construction operations may be necessary during nighttime hours to minimize disruption to traffic flows and maintain the construction schedule. The public would be notified prior to scheduled nighttime construction activities.

BMPs for minimizing construction noise impacts would be implemented, such as maintaining vehicle mufflers or limiting percussive construction equipment to daytime hours. Percussive construction equipment for bridge pier installation may be very loud but the impact would be limited in duration. Based on preliminary geotechnical information, pile driving for the bridge piers is not anticipated. Hammering or vibratory equipment may be required for construction and removal of the temporary construction bridges as well as pier removal for the existing South Bridge.

### Hazardous and Residual Waste

The Phase I ESA identified the potential for excavation activities to encounter contaminated soils and groundwater. The Phase II and III assessments proposed during final design should identify such concerns prior to construction to prepare for appropriate removal and remediation. These

investigations would also identify whether special precautions for handling or to prevent worker exposures should be incorporated into operations. PADEP would be consulted during final design to identify any necessary procedures for activities impacting WS-2 and its EC (see **Section 3.7**, Hazardous and Residual Waste).

The demolition and removal of the existing South Bridge would result in the generation of substantial waste materials. Unusable materials would be disposed in permitted waste facilities.

The use, stockpiling, and storage of fuels and chemicals to support construction equipment and activities may result in occurrences of spills or other incidents. A PPC plan will be developed to identify risks, identify operational practices to avoid and minimize occurrences, and address procedures to remove and properly recycle or dispose of materials.

## 3.11 Section 4(f) Resources

Section 4(f) of the U.S. Department of Transportation (USDOT) Act of 1966, 49 U.S.C. Section 303(c) is a federal law that protects publicly owned parks; recreation areas; wildlife and/or waterfowl refuges; and significant historic sites, whether publicly or privately owned. This law requires that a Section 4(f) property may not be used unless it has been determined that there is no feasible and prudent avoidance alternative and the action includes all possible planning to minimize harm to the property resulting from such use, or that the use would be *de minimis*. A use may occur when land is permanently incorporated into a transportation facility, there is a temporary occupancy of land that is adverse, or there is a constructive use of the Section 4(f) property.

Section 4(f) requirements apply to all transportation projects that require funding or other approvals by the USDOT. As a USDOT agency, FHWA must comply with Section 4(f). FHWA's Section 4(f) regulations are at 23 CFR 774. This chapter was prepared to comply with Section 4(f) and Section 2002 of PS Title 71 Section 512(a)(15). This Section 4(f) evaluation includes a summary of Section 4(f) resources, uses of (effects on) those resources, mitigation, and coordination. The I-83 South Bridge Project's purpose and need can be found in **Chapter 1**, Introduction.

### 3.11.1 Introduction/Methods

The project team identified potential Section 4(f) resources within or in the project vicinity that could potentially be used by the proposed project.

The identification process included review of maps, aerial photographs, and recreation and comprehensive plans, as well as field visits and coordination with local officials. Potential Section 4(f) resources were evaluated to determine if Section 4(f) applicability criteria were met.

**Additional information on Section 4(f) can be found in:**

- Determination of Section 4(f) *De Minimis* Use Section 2002 No Adverse Use for Greenbelt Trail (April 2019), with Capital Area Greenbelt Trees Summary Report and Letter to CAGA (September 2020); see **Appendix D**

For resources meeting the applicability criteria, coordination was conducted with the officials having jurisdiction over the Section 4(f) resources. Historic sites coordination was conducted with the Pennsylvania SHPO, which in Pennsylvania is the PHMC. Coordination for park and recreational resources was conducted with the National Park Service, Susquehanna National Heritage Area Organization, PFBC, City of Harrisburg, CAGA, and Dauphin County Parks Department (DCPD).

For properties meeting the Section 4(f) applicability criteria, a determination was then made regarding whether the proposed project would affect, or use, any of the identified Section 4(f) properties. The proposed project is described in more detail in **Chapter 2**, Alternatives.

### 3.11.2 Affected Environment

As a result of the identification step, several Section 4(f) properties were identified in the project vicinity (see **Figure 3-33**). As shown in **Table 3-13**, 11 properties are either eligible for or listed in the NRHP, and 2 properties are public recreation sites[46]. No wildlife or waterfowl refuges are located within the project vicinity. Additional information about parks and recreation resources can be found in **Section 3.3**, Socioeconomics Analysis and Land Use. **Section 3.8**, Cultural Resources, contains additional information about eligible and listed historic properties within the project vicinity.

The following Section 4(f) properties involve only aerial crossings, and/or resulted in a No Effect or No Adverse Effect determination under Section 106 of the NHPA. As a result, these properties are not used and are not discussed further in this analysis:

- Pennsylvania Railroad: Main Line (Philadelphia to Harrisburg)
- Philadelphia & Reading Railroad (Philadelphia, Harrisburg & Pittsburg Branch)
- Pennsylvania Railroad: Enola Low Grade Freight Line (Enola to Parkesburg)
- Philadelphia & Reading Railroad (Philadelphia to Harrisburg)
- Harrisburg Historic District
- West Shore National Bank of Lemoyne
- Grace United Evangelical Church
- Henry T. Simmonds House
- Calvary Presbyterian Church
- Paxton Fire Station

The river islands immediately downstream of the South Bridge and an area appearing to look like a potential trail near the Pennsylvania Railroad: Enola Low Grade Freight Line (Enola to Harrisburg) on the west shore were examined for Section 4(f) applicability and determined not to be Section 4(f) properties. The islands are not designated as recreation areas, parks, or refuges and are at least partially within the boating restriction zone for the Dock Street Dam. The potential trail is not publicly owned and is not shown as a trail on Cumberland County's recreational trail mapping.

[46] One site is considered to be both a public recreation site and an eligible historic resource.

**Figure 3-33. Section 4(f) Resources in the Project Vicinity**

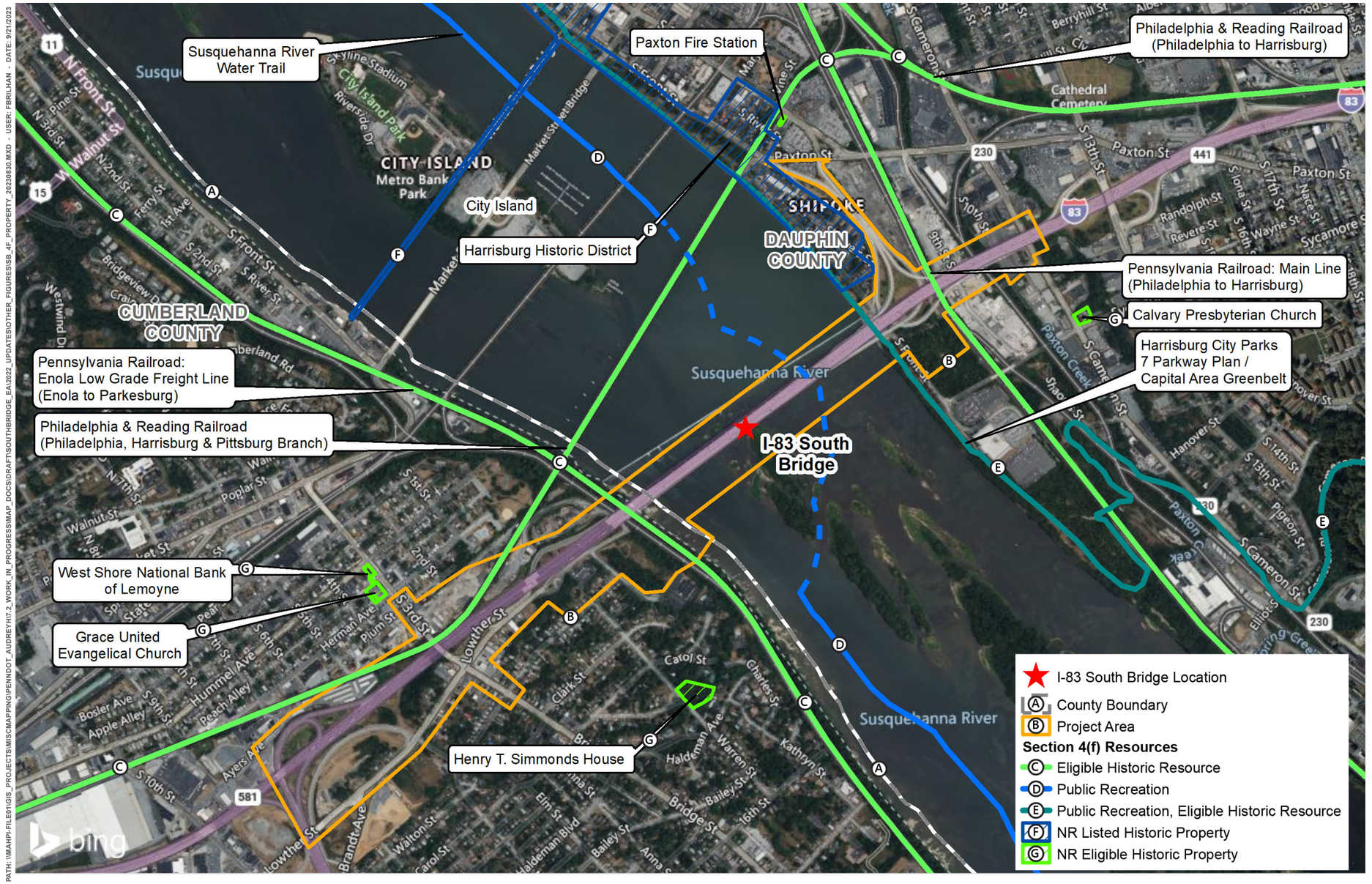


PATH: \\MAHPI-FILE01\GIS_PROJECTS\MISC\MAPPING\PENNDOT_AUDREY\H7.2_WORK_IN_PROGRESS\MAP_DOCS\DRAFT\SOUTHBRIDGE_EA\2022_UPDATES\OTHER_FIGURES\SB_4F_PROPERTY_20230830.MXD - USER: FBRILHAN - DATE: 9/21/2023

pennsylvania DEPARTMENT OF TRANSPORTATION

Data Sources:
Pennsylvania Historic & Archeological Resouce Exchange

0 Miles 0.25

I-83 SOUTH BRIDGE EA

**Table 3-13. Section 4(f) Properties in the Project Vicinity**

| Section 4(f) Property | Section 4(f) Applicability |
|---|---|
| Susquehanna River Water Trail | Public Recreation |
| Pennsylvania Railroad: Main Line (Philadelphia to Harrisburg) | Eligible Historic Resource |
| Philadelphia & Reading Railroad (Philadelphia, Harrisburg & Pittsburg Branch) | Eligible Historic Resource |
| Pennsylvania Railroad: Enola Low Grade Freight Line (Enola to Parkesburg) | Eligible Historic Resource |
| Philadelphia & Reading Railroad (Philadelphia to Harrisburg) | Eligible Historic Resource |
| Harrisburg City Parks 7 Parkway Plan/Capital Area Greenbelt | Public Recreation, Eligible Historic Resource |
| Harrisburg Historic District | Listed on NRHP |
| West Shore National Bank of Lemoyne | Eligible Historic Resource |
| Grace United Evangelical Church | Eligible Historic Resource |
| Henry T. Simmonds House | Eligible Historic Resource |
| Calvary Presbyterian Church | Eligible Historic Resource |
| Paxton Fire Station | Eligible Historic Resource |

### Susquehanna River Water Trail – Middle Section

The Middle Section of the Susquehanna River Water Trail is a 50-mile-long water trail with 23 primitive island campsites from Sunbury to Middletown, Pennsylvania. It was developed and is managed by the Susquehanna River Trail Association, a Pennsylvania 501(c)3 non-profit. The Dock Street Dam is located approximately 100 feet upstream of the South Bridge. According to the water trail guide published by the PFBC, boating upstream and downstream of the Dock Street Dam is prohibited, and as a result the trail is effectively discontinuous in the project vicinity. The trail map notes that boaters must exit the river at City Island, which is approximately 0.75 mile north of the South Bridge. The nearest access point to the south is at the privately-owned Steelton Boat Launch 5 miles downstream. As a result, the water trail is not a Section 4(f) resource traversing under the South Bridge.

### Harrisburg City Parks 7 Parkway Plan/Capital Area Greenbelt

The Harrisburg City Parks 7 Parkway Plan/Capital Area Greenbelt is both a Section 4(f) public park/recreation area and a Section 4(f) historic property. Known today as the Capital Area Greenbelt (or Greenbelt), the Section 4(f) property consists of a series of connected parks and trails that circles the City of Harrisburg and extends into portions of Swatara and Susquehanna Townships. The park system emerged from the City Beautiful movement as a response to Harrisburg's rapid growth and industrialization at the turn of the twentieth century. The greenbelt concept was developed by professional planners and city boosters alongside a series of improvements meant to alleviate unsanitary and unpleasant urban conditions. Warren Manning, a Boston-based landscape architect, developed the plans for the parks. The 1901-1902 Manning plan called for linking new and existing parks and playgrounds with a green "parkway" that would surround the City of Harrisburg with a continuous belt of greenspace. Land acquisition for the

parks began in 1904 and continued until the 1920s, but difficulties in acquisition prevented the plan from reaching completion.

As a public park/recreational area, the Greenbelt is described as a 20-mile loop trail with on-road and dedicated paths for bikers, walkers, and non-motorized activities. It is operated by the non-profit CAGA in coordination with the City of Harrisburg and DCPD.

As a historic property, the Greenbelt is considered to be a historic district, which was determined eligible for listing in the NRHP under Criterion A for its association with events that have made a significant contribution to the broad patterns of history. The park system is associated with the City Beautiful movement, a national trend in city planning, architecture, and landscape architecture that emerged at the turn of the twentieth century.

## 3.11.3 Environmental Consequences

### No-build Alternative

The no-build alternative is not anticipated to use Section 4(f) resources. Without replacement, the bridge and viaduct structure would continue to deteriorate and would eventually be at risk for full or partial failure. Should the bridge and viaduct reach a point where they would have to be closed, or portions of the structures fall, Section 4(f) resources may be substantially impacted. For example, the Greenbelt could need to be temporarily closed for emergency repairs or debris removal. More frequent bridge and viaduct maintenance would cause increasing disruption to Greenbelt users.

### Build Alternative

**Table 3-14** summarizes the proposed project's potential uses of each Section 4(f) resource. PennDOT, in coordination with the officials having jurisdiction, has determined that no Section 4(f) properties will be used by the project except for a *de minimis* use of the Greenbelt, and only this *de minimis* use is discussed further in this section. With required public notice and concurrence with the officials having jurisdiction over the resource, a *de minimis* use can be approved for parks, recreation areas, and wildlife or waterfowl refuges if the project will not adversely affect the activities, features, and attributes that make it eligible for Section 4(f) protection.

**Table 3-14. Section 4(f) Resources in the Project Vicinity**

| Section 4(f) Property | Section 4(f) Applicability | Potential Section 4(f) Use |
|---|---|---|
| Susquehanna River Water Trail | Public Recreation | None – water trail discontinuous through project area; boating restriction zone for Dock Street Dam |
| Pennsylvania Railroad: Main Line (Philadelphia to Harrisburg) | Eligible Historic Resource | None |
| Philadelphia & Reading Railroad (Philadelphia, Harrisburg & Pittsburg Branch) | Eligible Historic Resource | None |

| Section 4(f) Property | Section 4(f) Applicability | Potential Section 4(f) Use |
|---|---|---|
| Pennsylvania Railroad: Enola Low Grade Freight Line (Enola to Parkesburg) | Eligible Historic Resource | None |
| Philadelphia & Reading Railroad (Philadelphia to Harrisburg) | Eligible Historic Resource | None |
| Harrisburg City Parks 7 Parkway Plan/Capital Area Greenbelt | Public Recreation, Eligible Historic Resource | *De Minimis* |
| Harrisburg Historic District | Listed on NRHP | None |
| West Shore National Bank of Lemoyne | Eligible Historic Resource | None |
| Grace United Evangelical Church | Eligible Historic Resource | None |
| Henry T. Simmonds House | Eligible Historic Resource | None |
| Calvary Presbyterian Church | Eligible Historic Resource | None |
| Paxton Fire Station | Eligible Historic Resource | None |

### Harrisburg City Parks 7 Parkway Plan/Capital Area Greenbelt

The proposed project would result in minor alterations to the Greenbelt. The bridge carrying I-83 over the Greenbelt would be reconstructed and widened. This would require the construction of piers within the resource boundary. The northbound 2nd Street off ramp would be relocated south of its current alignment. New piers would be constructed to support the ramp, and existing piers would be removed. A portion of the land under the I-83 bridges currently belongs to the City of Harrisburg; the other portion is privately owned. PennDOT currently holds an aerial easement over the resource. As part of the project, PennDOT would convert the aerial easement to fee simple right-of-way and acquire additional right-of-way to accommodate the project footprint.

The existing Greenbelt between the South Bridge masonry pier and the Susquehanna River would remain unchanged. However, the Greenbelt Trail would be temporarily affected by construction activity. The upper portion of the trail would be rerouted with a 12-foot multi-use path along Front Street, past the parking area, and a new ramp location to a merge point with the existing lower trail. The upper portion of the trail would remain open during construction. The lower trail would remain open when possible but would be temporarily closed during construction when needed. The gravel parking area currently located under I-83 that serves the Greenbelt would be paved, and lighting would be provided. Pending coordination and a maintenance and operations agreement with the City of Harrisburg and CAGA, a comfort station (restrooms and a drinking fountain) may be provided. After project completion, access to the area would be restored to its current condition, and the upper trail would be extended through the improved parking area. I-83 would continue to cross over the Greenbelt, and the recreational function of the Section 4(f) property would not change.

The construction of the South Bridge, northbound 2nd Street exit ramp, and the viaduct would require building a temporary construction causeway into the Susquehanna River, which could affect up to 29 trees, some of which were planted through CAGA efforts. Nine of these 29 trees were identified as having a memorial plaque associated with their planting. Efforts would be made

during final design to minimize the effects on the memorial tree area, and coordination would be undertaken with CAGA to remove and store the memorial plaques, then plant replacement trees and re-install the plaques post construction.

The proposed project would not alter the qualities, activities, features, or attributes of the Greenbelt as a public park/recreational resource. Within the project limits, the users would be detoured for safety as necessary during construction. The resource would be restored to its current public use upon project completion.

The NRHP-eligible Greenbelt retains its integrity of location, design, material, feeling, and association. Changes have occurred over the years to affect its setting, including increased urbanization and the construction of I-83 through the Greenbelt. The proposed project would impact a small portion of the Greenbelt along the riverfront, but it would not destroy or damage characteristics that make it eligible for listing in the NRHP. The relocation of bridge piers and improvements to the parking and trail would result in modest changes to the setting of a small portion of the historic resource. However, non-contributing bridges and piers and a gravel parking area already exist in the project vicinity, and the overall feeling and setting of the resource would not change. The design intent for this portion of the Greenbelt consisted of a riverfront promenade, and the project would not change the general design intent. The resource would still reflect significance as a City Beautiful park.

The project involves a *de minimis*/no adverse use on the Section 4(f) resource as evidenced through the minimization of harm to a public park, recreation land, or wildlife and waterfowl refuge as a result of mitigation to or avoidance of impacts to the qualifying characteristics and/or functions of the resource. Because the undertaking does not adversely affect the function/qualities of the Section 4(f) property on a permanent or temporary basis, and with agreement from the official with jurisdiction, the proposed project constitutes a *de minimis*/no adverse use.

The FHWA, coordinating with officials with jurisdiction, has made this finding, and a copy of the *de minimis* use form is included in **Appendix D**. The PHMC provided a letter on March 21, 2019, concurring that the project will have No Adverse Effect on this property. A copy of this letter is included in **Appendix C**. Correspondence from CAGA regarding the memorial trees can also be found in **Appendix D**.

### 3.11.4 Coordination

**Chapter 4**, Public and Agency Coordination, summarizes the outreach conducted during the development of this EA. **Section 3.8**, Cultural Resources, summarizes the coordination efforts specific to historic properties and Section 106 of the NHPA.

PennDOT coordinated with the PHMC, the official with jurisdiction over Section 4(f) historic properties, regarding determinations of eligibility and findings of effect.

PennDOT coordinated with the PFBC and City of Harrisburg, the agencies with jurisdiction over Section 4(f) recreational resources in the project vicinity.

A public open house meeting held on October 19, 2018, provided public opportunity to comment on project effects to the Greenbelt historic and recreational resource prior to the officials with jurisdiction concurring that the proposed project would not adversely affect the activities, features, and attributes that make this property a Section 4(f) property.

### 3.11.5 Mitigation

The proposed project will adhere to the following mitigation measures:

- The Greenbelt, between the South Bridge masonry pier and the Susquehanna River, will remain unchanged, though the upper trail will be temporarily detoured during construction to a path along Front Street. The lower trail will remain open to the extent possible but will involve temporary closures when necessary. The upper trail detour will allow for use and maintain continuity of the Greenbelt during construction.
- For the Greenbelt Trail and the memorial trees planted to the south of the bridge on the east shore of the river, the following measures will be adhered to:
    - Coordinate with CAGA regarding the removal and storage of the memorial plaques prior to their removal
    - Plant replacement trees and work with CAGA to install the memorial plaques and update the on-site tree directory (if needed)
    - Develop an agreement for the City of Harrisburg to operate and maintain the improved parking area under the bridge
    - Install fencing to separate the multi-use path and parking
    - Include a barrier with architectural surface treatment to protect trail users along Front Street
    - Provide an automobile parking lot and construct a retaining wall with fencing along the existing abutment to support the proposed parking area
    - Provide landscape plantings, bike racks, repair station, kiosk, benches, and pedestrian-scale lighting
    - Reconstruct the Greenbelt ramp area at the southern side of the parking area
    - Use flaggers and temporary barriers to control use of the trail as necessary
    - Potentially provide a comfort station with restrooms and a drinking fountain (requires maintenance agreement with the City of Harrisburg)
- After completion of the project, the Greenbelt will be restored to its current condition and the upper trail will be extended through the improved parking area.

## 3.12 Cumulative Effects

### 3.12.1 Introduction/Methods

Cumulative effects include “the impact on the environment which results from the incremental impact of the action when added to other past, present, and reasonably foreseeable future actions

regardless of what agency (federal or non-federal) or person undertakes such other actions. Cumulative effects can result from individually minor but collectively significant actions taking place over a period of time" (40 CFR 1508.7). This analysis was conducted in accordance with PennDOT's *Indirect and Cumulative Effects (ICE) Desk Reference* (PennDOT Publication 640, March 2008)[47].

The first step in performing the cumulative effects analysis is to identify which resources to consider in the analysis. The no-build alternative would not contribute to cumulative effects and is not discussed. Resources not evaluated within this EA are not included in the cumulative effects analysis because they are not present, namely: farmlands, wild and scenic rivers, coastal zones and barriers, and threatened and endangered species.

Cumulative effects are only considered for resources with a direct or indirect effect from the I-83 South Bridge Project. The following resources, while present, would not have direct or indirect effects that would contribute to cumulative effects after considering proposed mitigation, and are therefore not considered in detail in the cumulative effects analysis.

- **Air Quality and Climate Change.** The project has been modeled and found to meet regional and project-level air quality conformity requirements. The modeling includes past, current, and future transportation projects within the analysis area; therefore, the analysis in **Section 3.5**, Air Quality and Climate Change, is an analysis of cumulative impacts. Reduced traffic congestion due to additional travel lanes and reduced maintenance would reduce GHG emissions. There are no long-term air quality impacts anticipated as a result of the project that will require implementation of mitigation measures.
- **Noise.** While there may be noise contributions from the project, the evaluation in **Section 3.6**, Noise, is a cumulative analysis of current and future noise levels based on traffic modeling that includes future land use and past, current, and future transportation projects within the analysis area. Therefore, further cumulative effects to noise are not included in this analysis.
- **Hazardous and Residual Waste.** The analysis in **Section 3.7**, Hazardous and Residual Waste, considers past hazardous material spills and contaminated locations and the potential for the project to contribute to those effects. The project is anticipated to result in impacts associated with excavation of potentially contaminated soils. However, appropriate mitigation is proposed to avoid and minimize further contamination. Where hazardous and residual waste materials are encountered during construction, they will be handled and disposed of appropriately, resulting in an overall reduction in hazardous and residual waste contamination in the project area.
- **Visual Impacts.** The new South Bridge would be similar in height and length to and in the same location as the existing bridge. Based on the conceptual design and mitigation, no direct or indirect impacts are expected that warrant further cumulative effects analysis. As

[47] https://www.dot.state.pa.us/public/PubsForm/Publications/PUB%20640.pdf

discussed in **Section 3.4**, Visual Resources, the change in bridge barrier height from 32 to 45 inches may change what drivers can see from the bridge such that they would not see things as close to the bridge as before, but they would still see the vista upstream or downstream depending on their travel direction. The views of I-83 within Lemoyne or from the Harrisburg/Shipoke/Greenbelt Trail on the east shore would not greatly change.

- **Cultural Resources.** There are no cultural resource effects that would contribute to a cumulative effect. As discussed in **Section 3.8**, Cultural Resources, PennDOT, on behalf of FHWA, submitted its finding that the project would have no effect upon archaeological resources to the PHMC, which serves as the PA SHPO. Also included in that submission was PennDOT's finding that the project would have no adverse effect upon cultural resources. The PHMC has concurred that there will be either "no effect" or "no adverse effect" on any historic resources. Therefore, there would not be a contribution to cumulative cultural resource impacts from the project.
- **Transportation**. As discussed in **Section 1.3**, Purpose and Needs, and **Section 3.3**, Socioeconomic Analysis and Land Use, effects on transportation including transit services already constitutes a cumulative effects analysis. Traffic modeling used for the project includes reasonably foreseeable future land use and reasonably foreseeable transportation improvements. The traffic model accounts for these future development changes and predicts changes to traffic volumes and flows based on that development and the planned transportation network. Direct impacts to transportation including transit are mitigated through project design features. Adding a lane in each direction and adding shoulders on the South Bridge, and adding a bike lane and sidewalks to the S. 3rd Street Bridge in Lemoyne increases capacity and improves safety for all travelers within and through the project area. With the proposed design features and mitigation, the project would not contribute to cumulative effects.
- **Land Use and Planned Development.** As discussed in **Section 3.3**, Socioeconomic Analysis and Land Use, little vacant, developable land exists in the project area (see **Figure 3-7**, Study Area Land Use, and **Table 3-6**, Study Area Land Use). The improved interchange on the west shore would change access routes but would not provide new access into areas that would induce growth. The project is consistent with locally adopted plans.
- **Economy.** As discussed in **Section 3.3**, Socioeconomic Analysis and Land Use, the project is not expected to have an adverse effect on the local and regional economy. One business would be affected by the new southbound off ramp of the Lemoyne Interchange and a second business would be affected by temporary easements during construction of the viaduct on the east shore. The businesses may be able to continue operations on their remaining land. Access to other businesses in the project area would be maintained during and after construction.
- **Community Facilities and Services.** As discussed in **Section 3.3**, Socioeconomic Analysis and Land Use, the project is not expected to negatively affect emergency service

providers. No direct adverse effects to the school districts would occur because the schools are located outside the immediate project area. No adverse effects were identified to recreational resources, fishing, and boating. Any construction impacts would be temporary and mitigated by implementing a Maintenance and Protection of Traffic Plan.

Because of the potential for direct or indirect effects that could contribute to cumulative impacts, the following resources are evaluated: wetlands and waterways, floodplains, vegetation and wildlife, and socioeconomics and environmental justice.

### 3.12.2 Boundaries

Cumulative effects are considered within geographic boundaries that provide context to understand the health of the resource. The following boundaries were used:

- The project's direct and indirect impact to wetlands, waterways, vegetation, and wildlife habitat are localized and generally fall within the direct footprint of the roadway improvements. To provide context for the cumulative effects analysis, however, the boundary for analysis is expanded (**Figure 3-34)**.
- Temporary floodplain impacts, although minimal, were identified to extend as much as 8 miles upriver from the project area. As such, the proposed boundary for the floodplain analysis is the mapped Susquehanna River floodplain, extending upriver to encompass that potential temporary impact area.
- Potential socioeconomic and environmental justice effects associated with the project would fall within the expanded study area (**Figure 3-34**).

### 3.12.3 Time Frame

The time frame for analysis goes back to 1958, just prior to the initial construction of the South Bridge (see 1958 aerial photograph shown in **Figure 3-36** in the following section). The following sections provide information on the past, present, and reasonably foreseeable future conditions and provide context for understanding the potential cumulative effects.

#### Past

The cultural resource reconnaissance survey for the project provides detailed history of the development of bridge crossings in the Harrisburg area (*S.R. 0083, Section 094, John Harris Memorial (South) Bridge Replacement, Reconnaissance Survey,* December 2020). The following is a synopsis of the pertinent history. Consult that report for additional details.

> The first bridge over the Susquehanna River in the vicinity of Harrisburg was a wooden covered bridge designed by renowned bridge designer Theodore Burr sometime between 1813 and 1817. The bridge, known as the Camelback Bridge, had 12 spans and was divided by City Island, portions of which remained in use until 1902 when it was replaced by the Market Street Bridge (PHMC and PennDOT 1986, 61). The twentieth century growth of the west side of the Susquehanna River

> was largely driven by the construction of a new bridge and the introduction of a trolley system based out of Harrisburg beginning in the 1890s. A new bridge, consisting of a metal truss connecting to Harrisburg's Walnut Street, was built in 1889, and operated with much cheaper tolls than the Camelback Bridge, which operated largely as a monopoly. The effort to construct the new bridge was led by the People's Bridge Company, which was formed in 1889. After numerous legal battles with the Harrisburg Bridge Company over construction of a bridge too close to their own, and after efforts by the bridge company to reduce tolls and thus draw support away from the new bridge, the People's Bridge Company was granted a charter in March of that year (Casella 1996:6-7). The new bridge operated under a cheaper toll structure, providing increased access to Harrisburg markets for farmers and residents. The bridge ultimately operated under tolls until 1957, when the money for its acquisition by PennDOT was finally raised (Casella 1996:15).[48]

The SR 0083 Section 078 Dauphin County Eisenhower Interchange Reconstruction Project (East Shore Section 2) EA contains pertinent details on the development of I-83 that are relevant to understanding the cumulative effects analysis. The following is a synopsis of the pertinent context[49]:

> The State Route 0083 had its origins with the Harrisburg-York-Baltimore Expressway, constructed in 1951. During the early 1950s, State Route 0083 was constructed from the Local Road (LR) 767/LR 139 split north to State Route 0022. This section later became designated as the US 230 Bypass. In 1956, the bypass traveled south from its intersection with State Route 0022 to Derry Street in Swatara Township. During the 1960s, State Route 0083 began construction in several sections, starting first between Front Street, through 29th and Paxton Streets. In 1960, the riveted steel Southbound bridge was built and carried two-way traffic. The John Harris bridge was completed in 1961. The Eisenhower Interchange was completed and opened to traffic in 1971. In 1982, in order to accommodate increased traffic, the Southbound bridge was widened while the welded steel Northbound bridge was built in its entirety. The deck was replaced on the Southbound bridge as part of this project. In 1990, fracture retrofits were added along with other ancillary repairs.

The aerial photograph from 1937 (**Figure 3-35**) shows the project area at that time. The Market Street Bridge (labeled) provided one of the key access points between the east and west shores. The Dock Street Dam is depicted crossing the river within the project area. The Lemoyne neighborhood was well-established at that time. Development in the study area was still relatively light on both the east and west shores. None of the I-83 corridor had been developed for

[48] *S.R. 0083, Section 094, John Harris Memorial (South) Bridge Replacement, Reconnaissance Survey,* December 2020.
[49] https://www.i-83beltway.com/projects/east-shore-section-3.php

transportation. Agricultural land and rural development patterns are still evident south of Lemoyne.

The aerial photograph from 1958 (**Figure 3-36**) depicts I-83 under construction. The beginning of the Lemoyne Interchange is evident on the west shore, and the South Bridge appears to be under construction. Right-of-way on the west shore had been acquired, creating a barrier between areas north and south of the corridor. Infill development south of the corridor and in Lemoyne proper is evident, as is the loss of agricultural and other open space.

By 1970, I-83 through the project area had been completed (see **Figure 3-37**). The location and configuration of interchanges on the west shore and the South Bridge were established. Vegetated islands in the river were considerably more extensive than today. Infill development, particularly south of the I-83 corridor, is evident in the photograph.

An exact account of what resources were impacted over the study timeframe to the present is not easily discernible from aerial photography. However, it does appear that the river itself (and associated floodplains) are similar from the 1958 aerial to the current (2018) aerial but with considerably more infill development. The riverine islands appear similar throughout the years, changing as sedimentation changed the composition of the islands. The aerial photograph in **Figure 3-38** shows the extensive amount of development that had occurred by 2018. Based on the 1937 aerial (**Figure 3-35**), the study area was predominantly agricultural with residential development in the Lemoyne area, with a smaller residential area south of the project corridor of what would become the Lemoyne Interchange. The development of residential areas and businesses led to the removal of nearly all agricultural land from the area.

**Figure 3-34. Cumulative Effects Study Area**

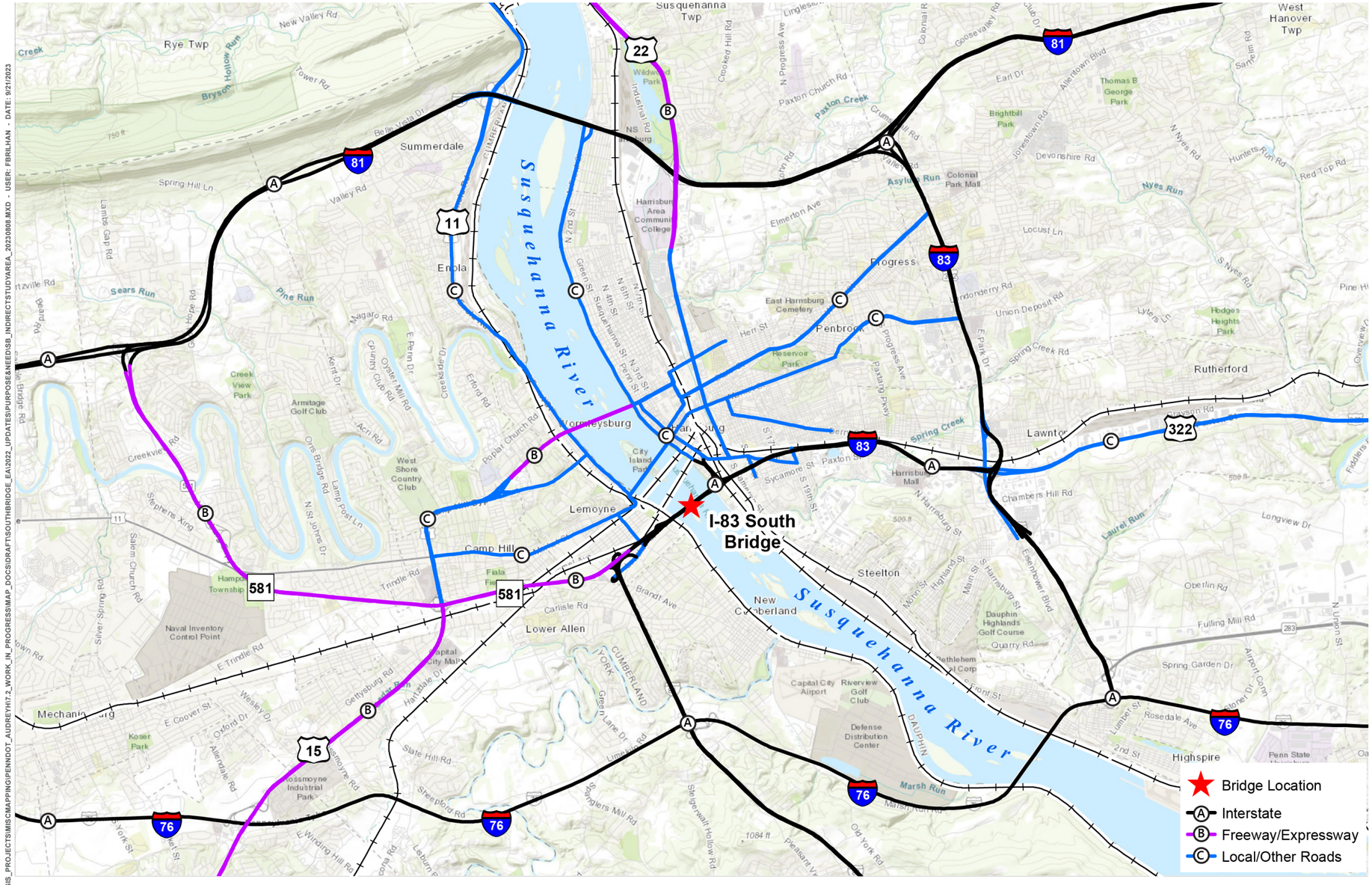

**Figure 3-35. 1937 Aerial Photograph**

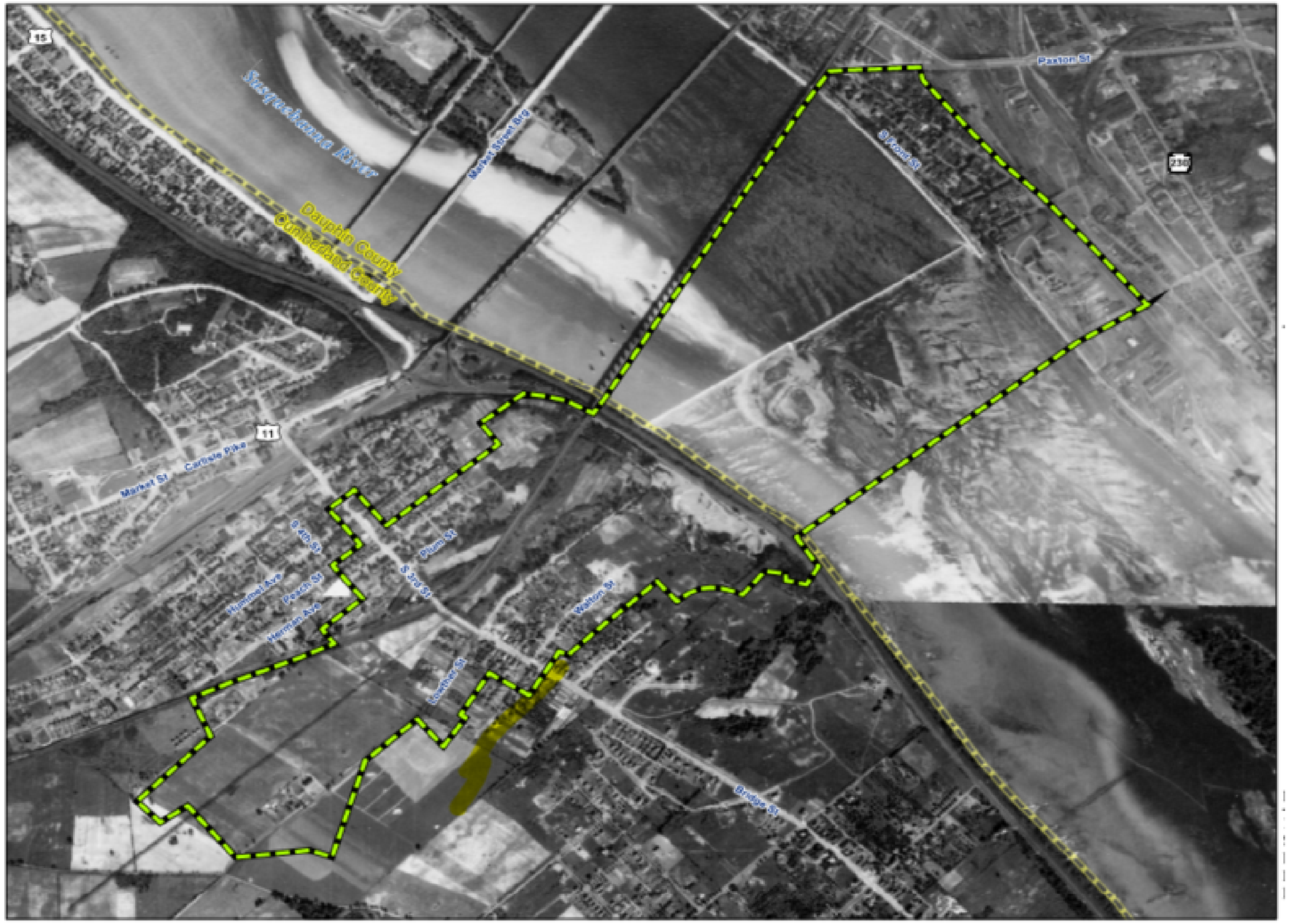


Source: *S.R. 0083, Section 094, John Harris Memorial (South) Bridge Replacement, Reconnaissance Survey*, December 2020; green dashed line represents the project's APE at the time of that report; project APE now extends east to Cameron Street (SR 230)

**Figure 3-36. 1958 Aerial Photograph**




Source: *S.R. 0083, Section 094, John Harris Memorial (South) Bridge Replacement, Reconnaissance Survey*, December 2020; green dashed line represents the project's APE at the time of that report; project APE now extends east to Cameron Street (SR 230)

**Figure 3-37. 1970 Aerial Photograph**

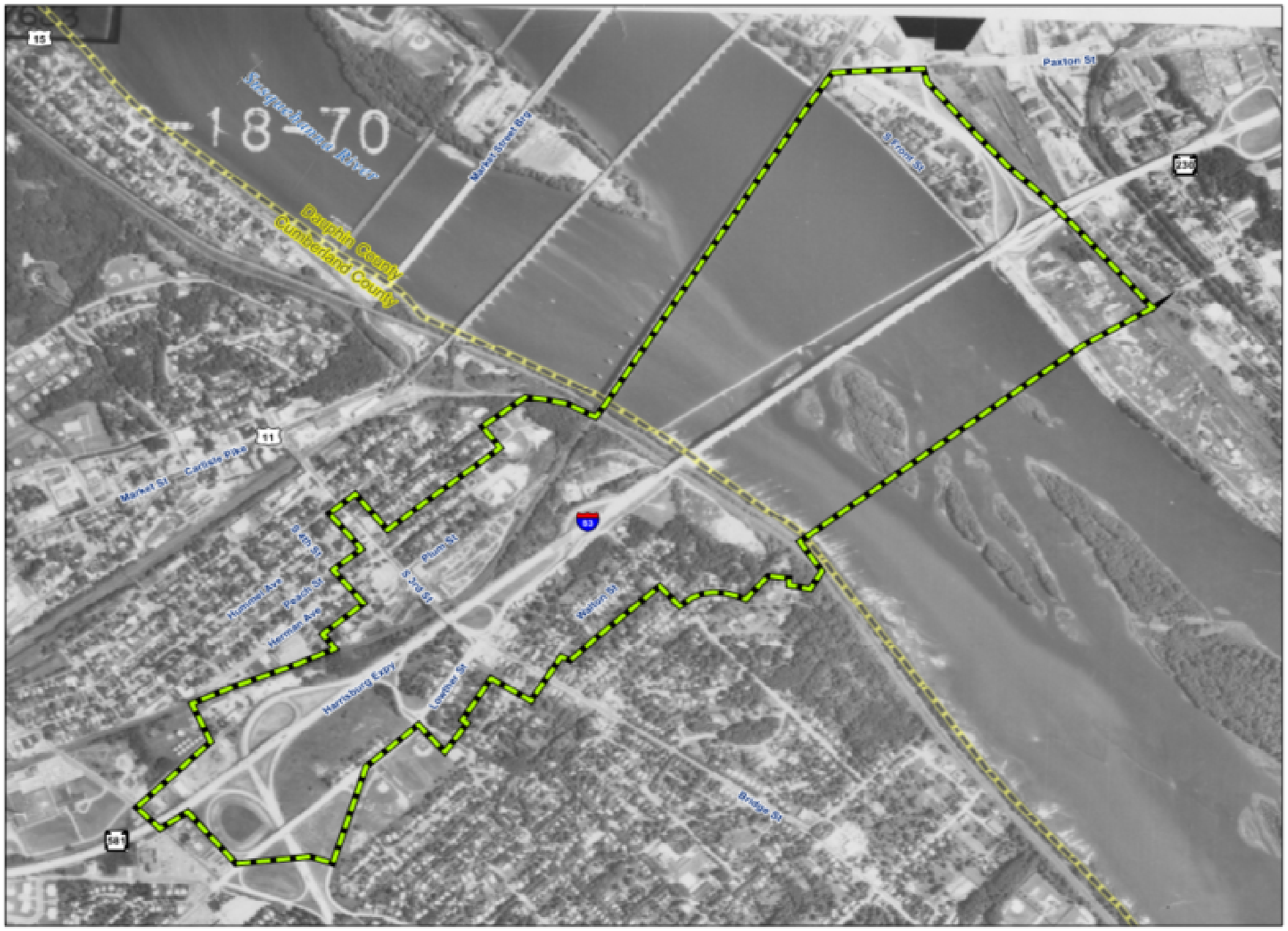


Source: *S.R. 0083, Section 094, John Harris Memorial (South) Bridge Replacement, Reconnaissance Survey*, December 2020; green dashed line represents the project's APE at the time of that report; project APE now extends east to Cameron Street (SR 230)

**Figure 3-38. 2018 Aerial Photograph**




Source: *S.R. 0083, Section 094, John Harris Memorial (South) Bridge Replacement, Reconnaissance Survey*, December 2020; green dashed line represents the project's APE at the time of that report; project APE now extends east to Cameron Street (SR 230)

### Present

Current conditions of each resource are summarized below. Details are described in the corresponding affected environment sections in **Chapter 3** and in technical reports cited in those sections. Details are not repeated here, and the reader is encouraged to consult the pertinent sections of **Chapter 3** and supporting technical documentation.

- **Wetlands and Waterways.** Field investigations identified three wetlands within the project study area, covering a total of 2.78 acres, as shown in **Figure 3-1**, Wetlands and Waters in the Study Area. For more information, see **Section 3.2.4**, Wetlands, and the *Wetland Identification and Delineation Report for S.R. 0083-094 John Harris Memorial (South) Bridge* (January 2021). The Susquehanna River is 444 miles long and drains more than 27,500 square miles, including approximately half of Pennsylvania. Within the study area, the river is slightly wider than 3,000 feet. The river in the Harrisburg area has been impacted by several bridges and the Dock Street Dam. For more information, see **Section 3.2.3**, Surface Water Resources, and the *Interstate 83 South Bridge over Susquehanna River Hydrologic and Hydraulic Memo* (March 2022). The project also involves a crossing of Paxton Creek; however, the creek would be spanned by the viaduct and effects would be minimal.
- **Vegetation and Wildlife Habitat.** Areas of SAV, including water star-grass (*Heteranthera dubia*), water-celery (*Vallisneria americana*), and filamentous algae (suspected *Cladophora* spp.), were identified within the Susquehanna River. It should be noted that the SAV survey of the area did not locate invasive species, nor did it locate threatened or endangered species. Temporary impacts to SAV that supports fish spawning would occur. Species using this vegetation are anticipated to shift downstream to other SAV areas during construction. After construction of this project, the vegetation beds are anticipated to re-establish naturally without the need for mitigation.
- **Floodplains.** The Susquehanna River has a 100-year floodplain and regulatory floodway associated with it, as shown on **Figure 3-4**, Floodplains and Flood Hazard Areas in the Direct Project Area. The majority of the bridge, piers, and temporary construction bridge are proposed to be within the regulatory floodway. Considerable portions of the east shore are within the regulated floodplain. For more information, see **Section 3.2.5**, Floodplains and Flood Hazard Areas, and the *Interstate 83 South Bridge over Susquehanna River Hydrologic and Hydraulic Memo* (March 2022).
- **Socioeconomics and Environmental Justice.** The South Bridge spans the Susquehanna River, connecting the City of Harrisburg on its east shore to the west shore communities in Cumberland and York Counties. Low-income, minority, and other underserved populations are located within the project study area and adjacent areas. Both census tracts on the east shore have minority populations greater than the county average. One of these east shore block groups also has a poverty level meaningfully greater than the county level. Other areas extending outside of the project study area contain low-income, minority and underserved populations; these areas are generally concentrated in the cities of Harrisburg,

Lancaster, Lebanon, York, and Pottsville as well as a number of boroughs in Cumberland County, including Wormleysburg, Camp Hill, Lemoyne, and Carlisle Boroughs. For more details, see **Section 3.13**, Environmental Justice, and the *SR 0083-094 John Harris Memorial (South) Bridge Environmental Justice Analysis* (August 2023).

### Future

**Growth Trends**. The project is not anticipated to result in substantial project-related growth, so no substantial indirect effects or induced growth are expected. Growth or land use changes in the project area are mostly related to redevelopment of previously developed properties and would not be caused by the project (see **Table 3-15**). Little vacant, developable land exists in the project area (approximately 0.8 acre in the direct study area). The improved interchanges on the east and west shores would not provide new access to developable areas; therefore, it is unlikely that the project would induce development.

**Reasonably Foreseeable Future Actions.** Several transportation projects are programmed to be completed within the cumulative effects study area of the I-83 bridge that were evaluated for potential contribution to cumulative impacts. Notable improvements from the 12-year transportation improvement program include the following projects:

- **Cameron Street Improvements:** Intersection improvements at Cameron Street/Maclay Street/Arsenal Boulevard and signal improvements along Cameron Street corridor.
- **Capital Gateway Improvements:** Bicycle/pedestrian improvements along Forster Street from the Susquehanna River to 2nd Street.
- **Derry Street Safety Improvements:** Safety improvements along Derry Street from 13th to 40th Streets.
- **I-83 East Shore Section 2:** Widening of I-83 to provide additional travel lanes in each direction between the Union Deposit Interchange and 29th Street. It includes the reconstruction of the Eisenhower Interchange and portions of US 322, I-283, and Eisenhower Boulevard. It includes new local access to Derry Street and a new interchange that will connect I-83 to Paxton Street in the Harrisburg Mall area.
- **I-83 East Shore Section 3:** Widening of I-83 to provide additional travel lanes in each direction between the Eisenhower Interchange near 29th Street and Cameron Street
- **Lemoyne Bottleneck Improvements:** Bicycle, pedestrian, and safety improvements on Market Street, from Bosler Avenue to Front Street.
- **Maclay Street Bridge:** Bridge replacement over the Norfolk Southern Railroad.
- **Market Street Bridge:** Bridge rehabilitation over the Susquehanna River.

The project team coordinated with Dauphin and Cumberland Counties to identify anticipated land development projects in the project vicinity that could contribute to cumulative impacts. As previously mentioned, the identified growth is not caused by the project, but could contribute to potential cumulative impacts. The developments listed in **Table 3-15** are planned in the project vicinity.

**Table 3-15. Reasonably Foreseeable Land Development Projects**

| Locale | Name | Land Use | Description |
|---|---|---|---|
| Lemoyne Borough, Cumberland County | Riverton Woods | Residential | Construction of a 40 unit, 3-floor senior living apartment building with a 12,561-square-foot footprint and 37,683 square-foot of floor area; project includes 50 parking spaces; access from North 12th Street |
| East Pennsboro Township, Cumberland County | 98 East Penn Drive | Residential | Develop 432 multi-residential units, 160 townhomes, clubhouse, pool, dog park, and fitness center on 37 acres |
| East Pennsboro Township, Cumberland County | Autumndale Phase 2 | Residential | Develop 66 multi-family units |
| East Pennsboro Township, Cumberland County | Buckwalter Property | Residential | Construction of 6 townhouse buildings consisting of a total of 35 units; project includes parking and stormwater facilities; access from Valley Road |
| City of Harrisburg, Dauphin County | Veterans Outreach of PA Tiny Home Community | Residential | Construct a village of 15 tiny homes for homeless veterans and a community building that will serve as a common space; construct an access drive, park, emergency drive, and utilities |
| City of Harrisburg, Dauphin County | Former Federal Courthouse Renovations | Residential | Renovation of former courthouse and office space to 162 apartments and first floor commercial/retail space |
| Swatara Township, Dauphin County | Harrisburg Mall | Mixed Use | Demolish existing mall and redevelop for office/retail use on 60 acres |
| Swatara Township, Dauphin County | Swatara Township Municipal Complex | Mixed Use | Develop 9.9 acres for use as municipal buildings, swimming pool and other recreational uses |

As previously mentioned, the traffic modeling completed for the project was based on the approved traffic model, which incorporates approved land uses and zoning densities. That means that the anticipated traffic generated by developments listed in **Table 3-15** are already accounted for in the traffic forecast for the project area. Therefore, the noise, air quality, and other traffic-related cumulative impacts are incorporated into the traffic model and are described in the respective sections.

### 3.12.4 Summary

This section presents the cumulative effects analysis of the project on each evaluated resource when added to other past, present, and reasonably foreseeable future actions. The analysis identifies whether the cumulative impacts would be significant. **Table 3-16**, at the end of this section, shows the effects of past actions combined with past, present, and reasonably foreseeable

projects/actions in the cumulative effects study area. The final row presents the cumulative impacts of this project and a finding of significance related to the cumulative effect for each examined resource category. No significant cumulative effects resulting from this project are identified.

### Wetlands

Past development has created an urban environment. Few wetlands remain in the urbanized area. Wetlands occur along the river shores and on riverine islands. Approximately 0.03 acre permanent impact due to one bridge pier, 0.22 acre permanent bridge deck shading, and 0.41 acre of temporary impacts on wetlands due to tree cutting to allow the construction boom to swing (includes 0.31 acre for the temporary construction bridges. These impacts would be minimized by limiting tree cutting, and not grubbing (removing the roots). As documented in **Table 3-16**, other projects also do not affect wetlands in any great quantities. Most of the land development projects (**Table 3-15**) are on previously disturbed parcels and would not contribute to cumulative wetland impacts. The minor amount of wetlands affected by this project, in combination with other projects, would not result in a significant cumulative impact.

### Waterways

Several bridges and the Dock Street Dam have affected navigation on the Susquehanna River. The replacement South Bridge would have a very similar footprint in terms of pier placement in the river, so would not greatly change impacts to the river. The project would not impact navigability because the Dock Street Dam currently restricts navigation. NPDES permit requirements and BMPs would minimize effects on water quality during and post construction. The Market Street Bridge rehabilitation project might also affect the Susquehanna River. The rehabilitation project includes a proposed utilities bridge to carry utilities and bicycles/pedestrians. The new utilities bridge would have approximately 3,000 linear feet of permanent bridge deck shading and temporary impacts during construction. None of the land development projects would directly affect the Susquehanna River nor Paxton Creek. The I-83 South Bridge Project, in combination with other projects, would result in minimal stream impacts to the Susquehanna River and would not result in a significant cumulative impact (see **Table 3-16**).

### Floodplains

Prior development includes the existing bridges, dam, and shoreline development, all of which are included in the mapped 100-year floodplain and regulatory floodway. Portions of the built environment in the project vicinity are in the floodplain. The build alternative would not result in water surface elevation increases for the 50-year PennDOT design event or the FEMA 100-year event. The temporary construction bridge causeway would result in a minimal temporary increased flood risk during construction of the South Bridge replacement. The only other project that might affect the Susquehanna River floodplain is the Market Street Bridge rehabilitation project. The Market Street Bridge is not expected to result in permanent changes to the river hydrology or floodplain. Similar to the I-83 South Bridge Project, effects to the floodplain from the Market Street Bridge project would be temporary and be mitigated through the design. Collectively, the

projects are not anticipated to combine with other floodplain effects that would cause a significant cumulative impact (see **Table 3-16**).

### Vegetation and Wildlife Habitat

The existing Dock Street Dam has affected water flows. Fish stocks are healthy. SAV beds would be disturbed but would re-establish naturally, and abundant undisturbed SAV beds would allow species using this habitat to shift downstream to other SAV beds during construction. No threatened or endangered species use the area. Low habitat values remain for terrestrial animals. The I-83 South Bridge Project's impacts are limited to fish habitat impacted by new piers from the replacement South Bridge, and overall acreage covered by piers is similar to that of the existing piers. The temporary construction bridge (trestle) design of the causeway will not restrict fish passage. The Market Street Bridge project is a bridge rehabilitation and also includes a proposed utilities bridge to carry utilities and bicycles/pedestrians. Minor fish habitat and vegetation impacts are anticipated in the area of the new bridge piers. There may be temporary effects during construction. Other identified projects are in highly urban environments with little to no terrestrial habitat, and they do not affect fish habitat (see **Table 3-16**). The relatively minor amount of vegetation and wildlife habitat impacts caused by this project, in combination with effects from other projects, would not result in a significant cumulative impact.

### Socioeconomics and Environmental Justice

Based on the information on direct and indirect impacts in **Section 3.2**, Natural Resources, through **Section 3.13**, Environmental Justice, and the analysis in **Table 3-16**, the following items were identified as having potential for cumulative social impacts: residential relocations and community cohesion.

Relocations can impact neighborhoods and have social/economic effects. Displacements from past roadway construction are evident in aerial photographs, and reasonably foreseeable projects are anticipated to result in residential and commercial displacements. No residential relocations are anticipated with the I-83 South Bridge Project. One business is affected by the southbound off ramp of the Lemoyne Interchange; the business may continue operation on its remaining property. A second business is affected by temporary construction easements needed for construction of the viaduct on the east shore; the business may be able to continue operations during construction. Because this project does not have any residential relocations and the affected commercial businesses could remain, it would not contribute to cumulative social/economic impacts.

**Table 3-16. Potential Cumulative Impacts[a]**

| Project Name | Type | Status[b] | Wetlands | Waterways | Floodplains | Socioeconomics/ Environmental Justice | Vegetation and Wildlife |
|---|---|---|---|---|---|---|---|
| Past Impacts | Various residential, commercial, and industrial development; transportation facility development; bridge and dam structures, and shoreline development | Past – Completed | Past development has created an urban environment; few wetlands remain in the urbanized area | Several bridges and the Dock Street Dam have affected the Susquehanna River | Mapped 100-year floodplain and regulatory floodway included the existing bridges, dam, and shoreline development | Displacements from past roadway construction are evident in aerial photographs; I-83 created a barrier between areas north and south of the Lemoyne Interchange | Dock Street Dam has affected water flows; fish stocks are healthy; no threatened or endangered species are in the project area; low habitat values remain for terrestrial animals |
| I-83 East Shore Section 1 | Road reconstruction | Present – Opened to traffic fall 2021 | 0.02 acre | Does not affect the Susquehanna River; minor stream impacts to local watershed | None | 15 residential displacements; 4 commercial displacements; sufficient replacement residential and commercial property is available in the area | Highly urban area; none anticipated |
| Cameron Street Improvements | Intersection reconstruction and signal improvements | RFFA (~2024) | None anticipated | None anticipated | Not in the Susquehanna floodplain | None identified | Highly urban area; none anticipated |
| Capital Gateway Improvements | Bicycle/pedestrian improvements | RFFA (~2024) | None anticipated | None anticipated | In the Susquehanna floodplain; would not contribute to flood hazards | Positive effects to environmental justice communities | None anticipated |
| Lemoyne Bottleneck Improvements | Bicycle, pedestrian, and safety improvements | RFFA (~2024) | None anticipated | None anticipated | Partly in the Susquehanna floodplain; would not contribute to flood hazards | Combined with the S. 3rd Street improvements from the I-83 South Bridge Project; benefits local neighborhoods | Highly urban area; none anticipated |
| Derry Street Safety Improvements | Safety improvements | RFFA (~2025) | None anticipated | None anticipated | None anticipated | Safety improvements benefit an environmental justice area | Highly urban area; none anticipated |
| I-83 East Shore Section 2 Eisenhower Interchange | Road reconstruction | RFFA | 0.132 acre | Does not directly affect the Susquehanna River; 5,144 linear feet of stream impacts in the Spring Creek watershed; on- and off-site mitigation proposed | No impact | 58 residential displacements; 38 commercial displacements; sufficient replacement residential and commercial property is available in the area | 70 acres of tree clearing/cutting |
| I-83 East Shore Section 3 | Road reconstruction | RFFA | None identified | No direct impact to the Susquehanna River or Paxton Creek | None identified | 36 residential displacements; 23 commercial displacements; sufficient replacement residential and commercial property is available in the area | Some tree clearing/cutting along highway edge |

| Project Name | Type | Status[b] | Wetlands | Waterways | Floodplains | Socioeconomics/ Environmental Justice | Vegetation and Wildlife |
|---|---|---|---|---|---|---|---|
| **I-83 South Bridge (THIS PROJECT)** | Bridge replacement and road reconstruction | RFFA | 0.03 acre permanent for pier placement; 0.22 acre permanent bridge deck shading; 0.41 acre tree cutting in forested wetland for boom clearance (includes 0.31 acre temporary construction bridge impacts to wetlands) | Temporary fill and piers in Susquehanna River during construction; slightly wider but approximately the same number of permanent piers needed; spanning Paxton Creek | New bridge would not cause a permanent flood hazard; construction would have a temporary water elevation rise | No residential displacements;<br>2 businesses with property impact;<br>sufficient replacement commercial property is available in the area if needed. | Impacts limited to fish habitat from new piers; overall acreage covered by piers is approximately the same as existing piers; temporary construction bridge (trestle) design of the construction causeway will not restrict fish passage |
| Maclay Street Bridge | Bridge replacement | RFFA (2025–2028) | Temporary impacts to wetlands less than 0.001 acre | 40 linear feet of permanent impact and 110 linear feet of temporary impact to Paxton Creek | None anticipated | Two commercial displacements | Minor fish habitat impacts possible, but limited to direct footprint of new bridge piers; highly urban area over the railroad yard, with little to no vegetation |
| Market Street Bridge | Bridge rehabilitation | RFFA (2025–2028) | Temporary impacts to wetlands less than 0.1 acre | 3,000 linear feet of permanent impact to Susquehanna River for utilities bridge; Temporary impacts during construction | Not expected to cause permanent flood hazards; construction would have a temporary water elevation rise | None anticipated | Minor fish habitat and vegetation impacts anticipated; limited to direct footprint of new bridge piers |
| Future Land Development (see **Table 3-15**) | Commercial, residential, and mixed-use development | RFFA | Projects near the I-83 South Bridge Project are redevelopment or infill in a highly urban environment; no cumulative wetland impacts anticipated | Would not affect the Susquehanna River or Paxton Creek | Development would need to comply with floodplain development standards; no contribution to cumulative effects identified | Many of the projects create new or replacement housing, which would be anticipated to have a beneficial impact to housing inventories; the planned development is subject to local land planning | Highly urban area; none anticipated |
| **Total Cumulative Impacts from past, present, and RFFAs** | | | 0.82 acre of permanent wetland impacted cumulatively, including 0.41 acre of tree cutting for South Bridge | Approximately 8,294 linear feet of stream impacts in the Susquehanna River watershed; other projects either do not affect waterways, have minor impacts, or are bridge replacement projects with few new impacts | Projects would not cause a permanent flood hazard; construction for those projects result in only temporary water elevation rise | Historical development;<br>109 residential displacements;<br>66 commercial displacements;<br>sufficient residential and commercial replacement properties available in area | 70 acres of tree cutting and clearing; minor, limited impacts from new piers |

[a] Impacts are presented qualitatively where they cannot be quantified.
[b] RFFA= Reasonably Foreseeable Future Action

A homeless camp on the eastern shore of the bridge would be affected by a potential staging area for construction of the bridge. Coordination with the Capital Area Coalition on Homelessness (CACH) to date indicates that the combination of the City of Harrisburg, Dauphin County, and CACH will assist with information dissemination and services to ease impacts to the homeless encampment. The specific types of services to be provided would be determined by CACH in conjunction with the City of Harrisburg, Dauphin County, and PennDOT. Other land development projects identified are creating new housing (including a project to house homeless veterans), and as such would not contribute to adverse cumulative effects on housing or neighborhoods.

The I-83 South Bridge Project includes replacement of the S. 3rd Street Bridge, which would improve the bicycle and pedestrian environment connecting neighborhoods north and south of the S. 3rd Street Bridge on the west shore, which would be a benefit to past community cohesion effects. Other projects identified as potentially contributing to cumulative social impacts are reconstruction/rehabilitation projects not expected to impact cohesion or that would provide a safety, congestion, or bicycle/pedestrian benefit to adjacent neighborhoods. As a result, no significant cumulative neighborhood or community cohesion impacts are expected.

## 3.13 Environmental Justice

### 3.13.1 Introduction

EO 12898, *Federal Actions to Address Environmental Justice in Minority and Low-Income Populations* (February 11, 1994), directs federal agencies to identify and address, as appropriate, disproportionately high and adverse human health or environmental effects of programs, policies, and activities on minority and low-income populations. Pennsylvania EO 2021-07, *Environmental Justice* (October 28, 2021)[50], establishes the Office of Environmental Justice (OEJ) within the PADEP and an Environmental Justice Advisory Board (EJAB) to ensure environmental justice concerns are considered on state projects.

**Detailed information on the environmental justice analyses is presented in:**

- *Alternative Funding: Planning and Environmental Linkages Study* (September 2021)
- *SR 0083-094 John Harris Memorial (South) Bridge Environmental Justice Analysis* (August 2023)

The following were used in developing the EJ analysis methodology and conducting the updated EJ analysis as documented in the *SR 0083-094 John Harris Memorial (South) Bridge Environmental Justice Analysis* (August 2023):

- Executive Order 12898, *Federal Actions To Address Environmental Justice in Minority Populations and Low-Income Populations*, February 1994;
- FHWA Order 6640.23A, *FHWA Actions to Address Environmental Justice in Minority Populations and Low-Income Populations* (June 2012);
- USDOT Order 5610.2(c), *Actions to Address Environmental Justice in Minority Populations and Low-Income Populations* (May 2021);

[50] https://www.oa.pa.gov/Policies/eo/Documents/2021-07.pdf

- FHWA Environmental Justice Reference Guide (April 2015);
- USDOT Environmental Justice Strategy (November 2016);
- Federal Interagency Working Group on Environmental Justice & NEPA [National Environmental Policy Act] Committee, *Promising Practices for EJ Methodologies in NEPA Reviews* (March 2016);
- PennDOT *Project Level Environmental Justice Guidance*, Publication No. 746;
- PennDOT, *Every Voice Counts Environmental Justice Moving Forward*, Publication No. 737;
- Executive Order 13985, *Advancing Racial Equity and Support for Underserved Communities Through the Federal Government,* January 2021;
- Executive Order 14008, *Tackling the Climate Crisis at Home and Abroad*, January 2021;
- Executive Order 14091, *Further Advancing Racial Equity and Support for Underserved Communities Through the Federal Government*, February 2023;
- Executive Order 14096, *Revitalizing Our Nation's Commitment to Environmental Justice for All*, April 2023; and
- USDOT *Promising Practices for Meaningful Public Involvement in Transportation Decision-making,* October 2022.

Executive Order 14008 established the Justice40 Initiative,[51] an "all of government approach" that sets a goal of 40 percent of the benefits of certain federal investments to flow to disadvantaged communities. Most recently EO 14096 defined Environmental Justice as: "The just treatment and meaningful involvement of all people, regardless of income, race, color, national origin, Tribal affiliation, or disability, in agency decision-making and other Federal activities that affect human health and the environment so that people:

1. are fully protected from disproportionate and adverse human health and environmental effects (including risks) and hazards, including those related to climate change, the cumulative impacts of environmental and other burdens, and the legacy of racism or other structural or systemic barriers;
2. have equitable access to a healthy, sustainable, and resilient environment in which to live, play, work, learn, grow, worship, and engage in cultural and subsistence practices."

These executive orders have resulted in government wide initiatives, including the Justice40 Initiative, that strive for transportation equity and ensuring that transportation benefits and investments reach communities most in need. In addition to assessment of the negative impacts of transportation projects and systems on underserved communities, there are three major components of USDOT's implementation of the Justice40 Initiative. These include understanding:

1. The needs of a community through meaningful public engagement;

[51] See https://www.transportation.gov/sites/dot.gov/files/2023-05/Justice40%20Fact%20Sheetupdated.pdf and https://screeningtool.geoplatform.gov/en/#3/33.47/-97.5

2. How a community is impacted by lack of transportation investments and options; and
3. What benefits a project may create, who will receive them, and how they will alleviate how the community is experiencing disadvantage.

To address the new executive orders, the Council on Environmental Quality (CEQ) was directed to develop a new tool, called the Climate and Economic Justice Screening Tool (CEJST), to identify underserved communities in the U.S. The tool has an interactive map and uses datasets that are indicators of burdens in eight categories: climate change, energy, health, housing, legacy pollution, transportation, water and wastewater, and workforce development, which collectively define the disadvantaged communities. While the new executive orders do not alter FHWA's approach to identifying potential project-related disproportionate impacts on low-income and minority populations, the CEJST is used as an additional source of information to identify vulnerable populations in the study area.

This section assesses the effects of construction of the new I-83 South Bridge, demolition of the existing bridge, reconfiguration of the Lemoyne interchange, reconstruction of the 2n d Street/Front Street interchange and reconstruction of the viaduct from the South Bridge to Cameron Street with respect to low-income, minority, and other underserved populations.

Consideration of environmental justice concerns for this project began during the *Pathways Alternative Funding PEL Study* for the PennDOT Pathways Program. The *Pathways Alternative Funding PEL Study* includes a methodology for assessing environmental justice effects[52]. To evaluate potential impacts to environmental justice populations, PennDOT followed the methodology identified in the *Pathways Alternative Funding PEL Study.* At the time that the PEL EJ methodology was developed, the construction of the South Bridge project was planned to be paid for by placing a toll on the bridge. Those plans have evolved and tolling the South Bridge is no longer under consideration. The EJ analysis methodology was modified accordingly and has also been amended to reflect new Executive Orders related to EJ and equity that have come out in the past year. A detailed technical report documenting the results of the EJ analysis without tolling was prepared; for more information, see the *SR 0083-094 John Harris Memorial (South) Bridge Environmental Justice Analysis* (August 2023).

## 3.13.2 Methodology

Consistent with the documents referenced above, the environmental justice analysis for the project was performed by completing the following process:

- **Step 1: Define the Study Area.** Consistent with NEPA practices, identify the reasonable and logical boundaries by considering the potential for direct and indirect impacts related to the project.

[52] The *Pathways Alternative Funding PEL Study* is available at https://www.penndot.gov/about-us/funding/Pages/PEL-Study.aspx

- **Step 2: Identify Low-income and Minority Populations[53].** Collect recent data on race, color, national origin, income, Tribal governments, and seasonal and migrant workers in the study area, and apply FHWA and PennDOT methodology to identify low-income and minority populations. Identify the disadvantaged communities in the project study area using the Climate and Economic Justice Screening Tool (CEJST) version 1.0 issued by CEQ, which is a critical component of the Justice40 Initiative outlined in EO 14008.
- **Step 3: Solicit Input from Low-income and Minority Populations.** Using PennDOT's *Project Level Public Involvement Handbook*[54] and other environmental justice outreach guidance, identify appropriate outreach techniques. Through targeted outreach to potentially affected low-income, minority, and other underserved populations, identify transportation needs and concerns about the project to inform Steps 4, 5, and 6.
- **Step 4: Evaluate Adverse and Beneficial Effects.** Analyze whether the project would create impacts to communities or populations in the near, medium, or long term. Then, with input from the community, assess whether the impacts are adverse, beneficial, or both.
- **Step 5: Identify Disproportionately High and Adverse Effects.** Determine whether adverse effects are predominately borne by low-income, minority, or other underserved populations, and if these effects are more or greater than those effects borne by the general population.
- **Step 6. Evaluate Mitigation Measures.** If adverse effects would be predominately borne by low-income, minority, or other underserved populations and are more or greater in magnitude than the adverse effect that would be suffered by the general population, consult with the community to identify measures to avoid, minimize, or mitigate the impacts. Determine whether the mitigation measures are practical. Practical mitigation measures are those that are: effective and do not create other adverse effects that are more severe; feasible in terms of implementation and operation; and cost effective, while maintaining the financial viability of the project.

---

[53] FHWA Order 6640.23A, *FHWA Actions to Address Environmental Justice in Minority Populations and Low-Income Populations* (June 2012) defines an environmental justice population as any readily identifiable group of minority and/or low-income persons who live in geographic proximity, and, if circumstances warrant, geographically dispersed/transient persons of those groups (e.g., migrant workers, homeless persons, Native Americans) who will be similarly affected by a proposed FHWA program, policy, or activity:

- Low-income is defined as a person whose median household income is at or below the PADHS poverty guidelines. The 2021 poverty guideline for the 48 contiguous states is $26,500 per year for a four-person household (poverty guidelines are derived from the U.S. Census).
- Minority is a person who is: (1) Black: a person having origins in any of the black racial groups of Africa; (2) Hispanic or Latino: a person of Mexican, Puerto Rican, Cuban, Central or South American, or other Spanish culture or origin, regardless of race; (3) Asian American: a person having origins in any of the original peoples of the Far East, Southeast Asia, or the Indian subcontinent; (4) American Indian and Alaskan Native: a person having origins in any of the original people of North or South America (including Central America), and who maintains cultural identification through tribal affiliation or community recognition; or (5) Native Hawaiian and Other Pacific Islander: a person having origins in any of the original peoples of Hawaii, Guam, Samoa, or other Pacific Islands.

[54] https://www.dot.state.pa.us/public/PubsForms/Publications/PUB%20295.pdf

- **Step 7: Re-evaluate Disproportionately High and Adverse Effects and Document Decision.** If practical mitigation measures have been identified, re-evaluate whether adverse effects borne by low-income, minority, or other underserved populations are appreciably more severe or greater than those effects borne by non-environmental justice populations.

### 3.13.3 Study Area

The project area spans both Dauphin and Cumberland Counties. The I-83 South Bridge connects Harrisburg in Dauphin County to its neighboring communities to the west in Cumberland County over the Susquehanna River (**Figure 1-1**). The project area is heavily urbanized and includes residential housing as well as commercial and industrial land uses. On the west shore residential areas exist along Lowther Street on the south side of I-83 and to the north of I-83 on the northern side of the Norfolk Southern Railway. On the east shore the historic Shipoke neighborhood is along the Susquehanna River north of I-83.

The Norfolk Southern Railway passes under the western end of the South Bridge. On the east shore, Norfolk Southern and Amtrak rail lines pass under the Front Street/2nd Street interchange and East Shore Viaduct. There is also a Norfolk Southern line that crosses the river north of the South Bridge and then parallels I-83 on the west shore coming very close to I-83 near the S. 3rd Street Bridge in Lemoyne. Capital Area Transit (CAT) routes, stops, and facilities are located throughout the project area. Rabbittransit routes also use the South Bridge. The Lemoyne Borough wastewater treatment facility is located to the north of the western approach to the bridge. The Front Street sewage pumping station is located at the eastern end of the bridge, on the north side of I-83. The Capital Area Greenbelt (Greenbelt) Trail parallels the east shore of the river and traverses under the South Bridge. The Dock Street Dam is located just north of the bridge, and several small river islands are located south of the bridge. Several other bridges—the Market Street Bridge, Harvey Taylor Bridge, I-81 George N. Wade Bridge, and the I-76 Turnpike Bridge—provide connections across the Susquehanna River in the Harrisburg region. The Market Street and Harvey Taylor Bridges provide mobility for bicyclists and pedestrians between the east and west shores in downtown Harrisburg. The S. 3rd Street Bridge in Lemoyne carries Bike Route J which then traverses the Borough of Lemoyne and continues east across the Market Street Bridge into Harrisburg and connecting with the Greenbelt Trail.

The project's western terminus starts just east of the I-83/PA-581 split and encompasses a proposed reconstruction of the Lemoyne interchange on the west shore. The proposed project includes the replacement, widening, and lengthening of the S. 3rd Street Bridge in Lemoyne; reconstruction of the Lemoyne interchange; replacement and widening of the South Bridge over the Susquehanna River; and reconstruction of the viaduct from the river to Cameron Street, including the Front Street/2nd Street interchange. The eastern project terminus is at Cameron

Street (the eastern end of the viaduct supporting the I-83 mainline on the east shore, which bridges over the Norfolk Southern and Amtrak rail lines, Cameron Street [SR-230], and Paxton Creek)[55].

A homeless encampment is located on existing PennDOT right-of-way on the east shore in the vicinity of the existing South Bridge and associated ramp structures and on private property that PennDOT plans to acquire for the new bridge structure and ramps, as well as a staging area for project construction.

### 3.13.4 Affected Environment

This section summarizes the populations identified as low-income, minority, or other underserved in the project study area. These populations were identified based on U.S. Census 2017–2021 ACS data, U.S. Census Transportation Planning Products data, USEPA EJSCREEN data, and CJEST data. These populations were also identified through coordination with knowledgeable parties, including PennDOT District Environmental Justice Coordinators, local Metropolitan Planning Organization (MPO)/Rural Planning Organization (RPO) representatives, county and local agencies, school district administrators, Chambers of Commerce, local businesses and industry associations, labor unions, church leaders and other prominent community members, civic/advocacy groups, and health care institutions. Additionally, field observations were conducted to help identify low-income, minority, or other underserved populations.

Given the variation in low-income and minority population characteristics in Pennsylvania's cities, suburbs, and rural areas, selecting a statistical reference area to identify the block groups that may have meaningfully higher low-income and minority populations is problematic. In Pennsylvania, the OEJ, EJAB, and MPOs/RPOs use a variety of thresholds to identify protected populations. Both OEJ and EJAB identify low-income and minority populations using ACS data at the census tract level, where the percent in poverty is greater than or equal to 20 percent, and the percent of non-white population is greater than or equal to 30 percent. These percentages are used as the low-income and minority rates for this project.

Five census tract block groups span the project impact area – two on the East Shore and three on the West Shore (see **Table 3-17** and **Figure 3-39**).

- East Shore census tract 021400 block group 1 to the south of the project area has a minority population rate (96%) substantially higher than the City of Harrisburg (76%), Dauphin County (36%), and Pennsylvania (24%). The low-income population rate (43%)

[55] A separate independent PennDOT project is underway on the east shore. That project, called East Shore Section 3 (ESS3), was evaluated in a previously approved NEPA document that included the Front Street/2nd Street interchange on the Susquehanna River's east shore. In order to facilitate construction, reduce costs, maximize efficiency, minimize construction duration, and minimize effects on traffic and other resources during construction, PennDOT has elected to move the eastern terminus for the I-83 South Bridge Project to Cameron Street to encompass the viaduct that goes over the Norfolk Southern Railroad, Amtrak, and Paxton Creek and to encompass the entire Front Street/2nd Street interchange. Environmental analysis from the previously approved ESS3 NEPA document has been incorporated herein and updated where appropriate.

is considerably higher than that of the City of Harrisburg (26%) and Dauphin County and Pennsylvania at 12% each.

- East Shore census tract 020100 block group 2 to the north of the project area has a minority population rate (48%) substantially lower than the City of Harrisburg (76%), but higher than Dauphin County's (36%) and Pennsylvania (24%). The low-income population rate (15%) is lower than that of the City of Harrisburg (26%) and slightly higher than that of Dauphin County and Pennsylvania at 12% each.
- West Shore census tract 010600 block group 4 to the south of the project area has a minority population rate (8%), which is lower than that of Lemoyne Borough (11%), Cumberland County (15%), and Pennsylvania (24%). The low-income population rate (2%) is also lower than that of the three reference areas.
- West Shore census tract 010600 block group 3 to the north of the project area has a minority population rate (8%) and low-income population rate (4%), less than the corresponding rates in each of the three geographical reference areas.
- West Shore census tract 010600 block group 5 to the north of the project area has a minority population rate (16%), higher than that of Lemoyne Borough (11%) and slightly higher than that of Cumberland County (15%) but well less than that of Pennsylvania (24%). The low-income population rate (5%) is less than the corresponding rates in Lemoyne Borough (8%), Cumberland County (7%), and Pennsylvania (12%).

The identification of minority and low-income population block groups for this environmental justice analysis was based on consideration of all three geographical reference areas in relation to the minority and low-income population rates in each respective block (**Figure 3-39)**. Field observations in and near the project area confirmed the designation of block group 1 in census tract 021400 as minority and low-income and block group 2 in census tract 021400 as minority. The field observations did not record additional areas with potential indicators of low-income or minority populations in the project area in Lemoyne Borough.

Community services and facilities and public housing are shown on **Figure 3-9** and area transit routes are shown on **Figure 3-10**. Public housing is prevalent in the City of Harrisburg; however, no public housing has been identified within the project impact area or its immediate vicinity. Many community services are available on both shores of the river. Transit service is available, and several routes make use of the South Bridge. Currently there is a Family Dollar, an Asian Supermarket, and several smaller stores offering groceries in the Hall Manor neighborhood and vicinity. Areas of Harrisburg are considered by the USDA Economic Research Service as a food desert[56], and many people use the South Bridge to access grocery and other retail stores on the west shore in Lemoyne and Camp Hill.

[56] See https://www.ers.usda.gov/data-products/food-access-research-atlas/go-to-the-atlas/#:~:text=The%20Food%20Access%20Research%20Atlas%20%28formerly%20the%20Food,to%20investigate%20multiple%20indicators%20of%20food%20store%20access.

As noted earlier, there is a homeless encampment within and adjacent to PennDOT right-of-way in the vicinity of the South Bridge and the Front Street/2nd Street interchange. This area is needed as a staging area for construction of the project. According to the CACH, this encampment, known as "tent city," is home to over 70 individuals as of July 2023. These residents are in several different clusters. The encampment has two Porta-Johns at the primary entrance and two garbage cans; during the warmer months, a spigot is attached to a fire hydrant to provide potable water.

Dauphin County Crisis Intervention Services and the CACH, along with a coalition of outreach service providers, support this community with services including but not limited to the following:

- University of Pittsburgh Medical Center nurses provide healthcare screenings, medication assistance, and insurance assistance;
- PATH and Crisis Outreach provide mental health services;
- Salvation Army food boxes are distributed by the Bethesda Mobile Mission;
- Several providers distribute clothes from donations;
- HELP Ministries conducts outreach for coordinated entry into housing programs, SNAP, and other mainstream benefits (e.g., unemployment, identification, and disability income);
- YWCA of Greater Harrisburg provides Veterans Homeless Services;
- Valley Youth House provides homeless youth services; and
- Dauphin County Mobile Library Van (Marco Polo Mobile) provides Wi-Fi hotspot, cell charging, books, laptop stations, and toiletries and sanitizing supplies.

The clearance and closure of the encampment is necessary for the safety of the residents during construction/staging activities. The clearance and closure to remove temporary structures and personal belongings would be coordinated with the City of Harrisburg, Dauphin County, and the Capital Area Coalition on Homelessness, who have agreed to assist with information dissemination and services to ease impacts to the impacted individuals in the homeless encampment. The specific types of services to be provided would be determined by the Capital Area Coalition on Homelessness in conjunction with the City of Harrisburg, Dauphin County, and PennDOT.

The Veterans Outreach of Pennsylvania (veteransoutreachofpa.org) broke ground in Spring of 2023 for a Community of Tiny Homes for Homeless Veterans in Phoenix Park approximately one half mile south of the current homeless encampment. The community will include 15 tiny homes and a community center that will provide meals and therapeutic services to support veterans moving from transitional to permanent housing. It is anticipated that some of the veterans living in the homeless encampment would be qualified to move into this facility.

The underserved communities identified with the CEJST screening tool are shown on **Figure 3-6**. Block Group 1 in census tract 021400 is identified as a disadvantaged community based on exceedances in the categories of energy, health, pollution, and workforce. No other block groups in the project area are designated as disadvantaged communities.

**Table 3-17. Race, Ethnicity and Poverty Status in the South Bridge Project Area**

| Geographic Area | Total Population | Race and Ethnicity[a] | | | | | | | | | | Total Minority (%) | Total Below Poverty (%) |
|---|---|---|---|---|---|---|---|---|---|---|---|---|---|
| | | White | % | Black | % | Asian | % | Other | % | Hispanic | % | | |
| EAST SHORE | | | | | | | | | | | | | |
| Census Tract 021400 Block Group 1 | 2,021 | 90 | 4.5 | 1,449 | 71.7 | 101 | 5.0 | 20 | 1.0 | 361 | 17.9 | 95.5 | 42.6 |
| Census Tract 020100 Block Group 2 | 1,097 | 574 | 52.3 | 496 | 45.2 | 0 | 0 | 0 | 0 | 27 | 2.5 | 47.7 | 15.2 |
| Harrisburg City | 49,247 | 12,023 | 24.4 | 22,593 | 45.9 | 1,621 | 3.3 | 1,380 | 2.8 | 11,630 | 23.6 | 75.6 | 26.5 |
| Dauphin County | 277,071 | 178,712 | 64.5 | 49,051 | 17.7 | 13,177 | 4.8 | 9,183 | 3.3 | 26,948 | 9.7 | 35.5 | 11.9 |
| WEST SHORE | | | | | | | | | | | | | |
| Census Tract 010600 Block Group 3 | 534 | 493 | 92.3 | 0 | 0.0 | 0 | 0.0 | 9 | 1.7 | 32 | 6.0 | 7.7 | 4.12 |
| Census Tract 010600 Block Group 4 | 1,707 | 1,572 | 92.1 | 28 | 1.6 | 0 | 0.0 | 107 | 6.3 | 0 | 0.0 | 7.9 | 1.99 |
| Census Tract 010600 Block Group 5 | 559 | 468 | 83.7 | 23 | 4.1 | 0 | 0.0 | 46 | 8.2 | 22 | 3.9 | 16.3 | 5.37 |
| Lemoyne Borough | 4,635 | 4,108 | 88.6 | 183 | 3.9 | 32 | 0.7 | 243 | 5.2 | 69 | 1.5 | 11.4 | 7.72 |
| Cumberland County | 251,487 | 213,304 | 84.8 | 9,561 | 3.8 | 11,612 | 4.6 | 6,494 | 2.6 | 10,516 | 4.2 | 15.2 | 7.05 |
| STATEWIDE | | | | | | | | | | | | | |
| Pennsylvania | 12,794,885 | 9,685,118 | 75.7 | 1,352,329 | 10.6 | 445,725 | 3.5 | 339,900 | 2.7 | 971,813 | 7.6 | 24.3 | 12.0 |

[a] The racial and ethnic categories provided are further defined as: White (White alone, not Hispanic or Latino); Black (Black or African American alone, not Hispanic or Latino); Asian (Asian alone, not Hispanic or Latino); Other (American Indian and Alaska Native alone, not Hispanic or Latino; Native Hawaiian and Other Pacific Islander alone, not Hispanic or Latino; Some other race alone, not Hispanic or Latino; Two or more races, not Hispanic or Latino); Hispanic (Hispanic or Latino; Persons of Hispanic origin may be of any race).
Sources: U.S. Census Bureau, 2015–2019 ACS 5-Year Estimates

**Figure 3-39. Minority and Low-Income Population Block Groups**

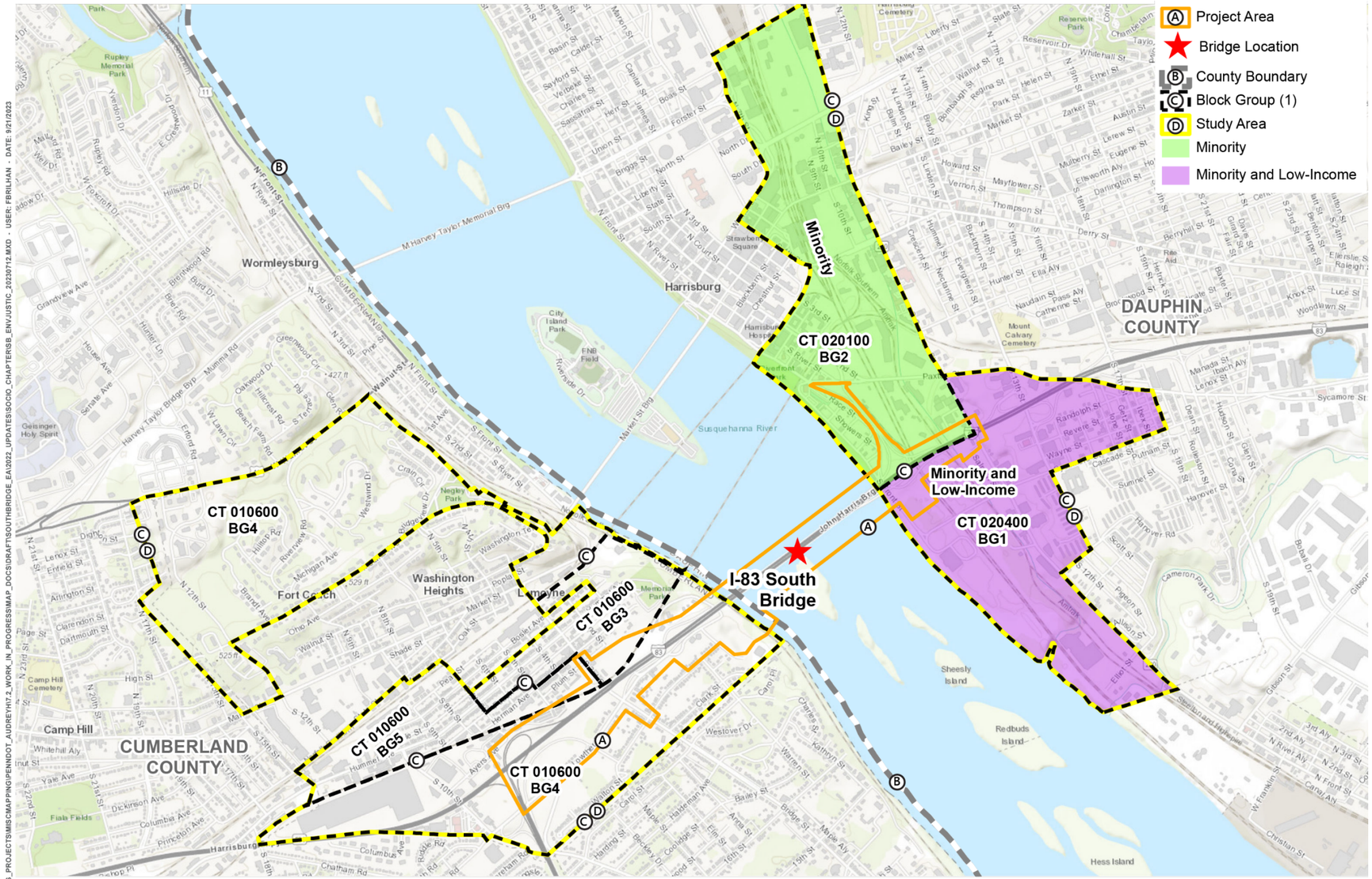

## 3.13.5 Environmental Consequences

### No-build Alternative

Without the project, there would be no change to existing conditions; therefore, no direct effects on environmental justice populations would be anticipated.

Under the no-build alternative, no capacity would be added to the South Bridge or to the viaduct on the east shore. Area travelers would continue to encounter congestion during peak hours, and traffic operations would continue to deteriorate. Inspections and maintenance of the existing bridge would continue to increase in frequency and magnitude, creating substantial and unpredictable impacts to traffic movement in the Harrisburg area with more frequent lane closures and increased use of detour routes. Without replacement, the bridge structure and viaduct would continue to deteriorate and would eventually be at risk for full or partial failure. Should the bridge and viaduct no longer be safe for travel, or portions of the bridge fall, there would be long-term effects on the local and regional economy as it would negatively affect community cohesion between the eastern and western sides of the bridge, access to employment, access to services, access to businesses, and movement of goods.

Increased maintenance, closures, or a failure of the South Bridge would result in vehicles having to travel along alternate routes to cross the Susquehanna River via other bridges, which would affect transit routes and service, communities along these alternate routes, and pedestrians and bicyclists using these routes.

### Build Alternative

No impacts to environmental justice populations are anticipated due to displacements. PennDOT anticipates using property currently occupied as a homeless encampment as a construction staging area. Coordination with CACH indicates that the combination of the City of Harrisburg, Dauphin County, and CACH will assist with information dissemination and services to ease impacts to the homeless encampment and find alternative locations for those inhabiting the encampment. The specific types of services to be provided would be determined by CACH in conjunction with the City of Harrisburg, Dauphin County, and PennDOT.

Temporary effects on community resources would be expected to result from project implementation, including increased dust and noise adjacent to construction staging areas and work activities; increased truck trips on study area roadways; and short-term closures to I-83 lanes and ramps, local street sidewalks and travel lanes, and the lower portion of the Greenbelt Trail. These temporary impacts would be offset by the long-term benefits of the project, including improved traffic and safety conditions, new sidewalks and shoulders, installation of pedestrian-scale and highway lighting, and community streetscape improvements.

Environmental justice populations may be affected by impacts to natural resources and waterways. Mitigation measures, including adherence to all permit conditions, use of a trestle design for temporary construction causeways, and using BMPs are expected to minimize those impacts.

Noise analysis revealed four NSAs warranting consideration of abatement. In two NSAs, both in Lemoyne on the southern side of I-83, it was determined that the noise impacts could be mitigated by noise barriers. Based on preliminary design, noise barriers in the other two NSAs, while warranted for consideration, would either not be feasible or would not be reasonable in accordance with FHWA guidelines. One of these NSAs, on the east shore in the Greenbelt Trail vicinity, is within a minority area. Analysis indicated that a noise barrier at this location would not achieve the 5 dBA necessary reduction for at least one noise sensitive receiver and is therefore not feasible. The change in noise levels is expected to impact the Greenbelt Trail and not a residential property. The other NSA is on the west shore, north of I-83. It is not within a low-income or minority area, and while a noise barrier would adequately attenuate the noise levels, it was determined not reasonable as it only benefitted one receptor representing three residences. Noise effects of the project would not be disproportionately high and adverse to low-income, minority, or other underserved populations.

While some localized adverse effects, such as noise and potential dust, could occur during construction at properties adjacent to the primary study area, these effects would be temporary and end once construction is complete. Additionally, construction would be managed to minimize the potential for adverse effects through the use of BMPs such as noise and dust control (see **Section 3.10**, Construction Impacts). While construction projects are inevitably disruptive to nearby land uses, most construction activity would occur over the river and on the west shore, which would limit the potential for disruption to nearby uses in low-income and minority areas on the east shore.

### 3.13.6 Mitigation

Measures to be implemented to mitigate potential adverse environmental justice effects include:

- Coordinate with the City of Harrisburg, Dauphin County, and CACH regarding project schedule and notification of those occupying the homeless encampment that they will need to move.
- Coordinate with the City of Harrisburg, Dauphin County, and CACH regarding services they can offer to assist in addressing the homeless encampment in the bridge construction staging area on the east shore.
- Provide advanced notice to the unhoused community that they will need to vacate the area acquired by PennDOT for construction.
- Once clearance and closure of the encampment has occurred, PennDOT will remediate the area for any health and safety concerns related to waste materials left behind by the homeless encampment.

### 3.13.7 Conclusion

No disproportionately high and adverse effects on low-income, minority, or other underserved populations have been identified for the project, since no substantial unmitigable adverse effects to these populations would result from project implementation.

As a result, evaluation of additional mitigation measures to offset adverse effects and the re-evaluations of disproportionately high and adverse effects on low-income, minority, and other underserved populations are not warranted.

# 4.0 Public Involvement and Agency Coordination

## 4.1 Public Involvement

PennDOT engaged the public, agencies, and other stakeholders to obtain input throughout the development of this EA. Outreach and coordination was solicited during four distinct but overlapping outreach efforts. First, during the ESS3 Project, PennDOT held public and small group meetings, in 2017 through 2019, that provided relevant information on the proposed east shore improvements[57]. Second, public and agency involvement was conducted on the South Bridge and west shore improvements in 2020 and 2021. Third, PennDOT completed a *Pathways Alternative Funding PEL Study* for potential alternative funding sources and determined that bridge tolling should be pursued as a near-term solution. As a result, bridge tolling was included as a component of the proposed South Bridge action. For reasons explained in Section 1.1.3, PennDOT is now moving the I-83 South Bridge Project forward without tolling the bridges. PennDOT completed outreach in 2023 to inform the public about the revised EA with removal of tolling. This outreach included notification of elected officials, issuance of a press release, updating the project website, and notification to stakeholders on the project mailing list in late June/early July 2023, outreach to the Capital Area Coalition on Homelessness and the City of Harrisburg in August 2023, and meetings as appropriate with Federal and state resource agency representatives.

### 4.1.1 PEL Public Involvement

In November/December 2020 and February 2021, PennDOT provided opportunities for public input on the *Pathways Alternative Funding PEL Study* via a public engagement platform on the Pathways Program's website. Outreach included a public engagement program conducted throughout the PEL process, targeted outreach to knowledgeable parties, and targeted outreach to low-income and minority populations throughout the state. PennDOT reached out to the public via the website, social media, and e-newsletters.

**Detailed information on public outreach in the project study area is summarized in:**

- *Dauphin SR 0083-094 – Public Meeting Summary for February 19 to March 29, 2021*
- *Dauphin SR 0083-094 - Public Meeting Summary for October 25 to November 24, 2021*

The Draft *Pathways Alternative Funding PEL Study* was available for formal public review and comment from April 29 to June 1, 2021, and was finalized in September 2021.

The *Pathways Alternative Funding PEL Study* identified and evaluated near- and longer-term potential alternative funding options to bridge Pennsylvania's $8.1 billion funding gap for

[57] As analysis and development of the I-83 South Bridge Project progressed, it was determined that combining the construction of the East Shore Viaduct into the construction of the South Bridge could maximize construction efficiency, reduce overall costs, shorten construction duration, and minimize impacts to traffic and other resources during construction. Therefore, the proposed I-83 South Bridge Project now incorporates the area from the eastern end of the South Bridge to Cameron Street, including the viaduct and the Front Street/2nd Street interchange.

highways and bridges. It included methodology for evaluating effects on environmental justice communities and a framework for assessing mitigation to off-set adverse community effects of the various potential strategies.

As the *Pathways Alternative Funding PEL Study* progressed, tolling of major bridges emerged as the most viable near-term solution. In February/March 2021, PennDOT began engaging the community, stakeholders, and legislators in the Pathways Program's MBP3 Initiative, which included announcing nine interstate bridges as candidates for bridge tolling, including the I-83 South Bridge. For more information on the outreach conducted, see the Final *Pathways Alternative Funding PEL Study*[58].

### 4.1.2 EA Public Involvement

**On-demand Virtual Public Meetings.** Public outreach for the previous EA for the I-83 South Bridge project included on-demand public meetings (virtual) over 30-day periods in February/March 2021 and October/November 2021. These meetings were accessible via the project's online engagement platform (project website). The online meetings included text, graphics, and videos that explained the online meeting platform and comment process, project overview, project history, purpose and need, alternatives development, design options, funding, environmental studies, and next steps. During the February/March 2021 public meetings, a total of 2,439 visits and 1,623 comments were recorded. During the October/November 2021 public meetings, a total of 1,171 visits and 402 comments were recorded. A Telephone Town Hall was held during the first public comment period, and in-person meetings were held during the second public comment period, as described below.

**Telephone Town Hall.** During the first virtual public meeting comment period, a Telephone Town Hall was held on March 16, 2021, from 6:00 to 7:00 p.m., and was attended by approximately 100 participants. The Telephone Town Hall provided the opportunity for members of the public without access to the Internet to learn more about the project. Eleven questions/comments, most related to tolling and other potential funding mechanisms, were discussed.

**In-person Public Meetings.** An in-person joint public meeting and plans display was held for the I-83 East Shore Section 2 and 3 projects (including the Front Street/2nd Street interchange and viaduct) on October 18, 2018, at the Harrisburg East Mall. Project team members and PennDOT staff answered questions from area residents and business owners. Translation services were available near the registration desk, and a bilingual staff member was present. The locations for the public meetings were also selected for their location along CAT bus routes to allow carless residents to attend. The purpose of the meeting was to provide a project update, including a comprehensive overview video that contained visual explanations of key project data, as well as present the recommended preferred alternative and gather input from the public. Approximately 414 individuals signed in at the open house.

[58] https://www.penndot.gov/about-us/funding/Documents/PennDOT-Pathways_PEL-Study.pdf

In-person public meetings were held on November 9, 2021, at the Harrisburg East Mall on the east shore; and November 10, 2021, at the Radisson/Penn Harris Hotel on the west shore. Preliminary findings of the environmental analyses conducted to date were reviewed at these meetings. Targeted outreach to low-income and minority populations in the study area included direct mail postcards throughout the project study area (more than 14,000 postcards sent); legal advertisements in both English and Spanish newspapers to reach both English and Spanish speakers in the area; posters sent to knowledgeable parties in the area to reach out to the communities they represent; and email blasts, social media posts, and traditional media stories. The locations for the public meetings were also selected for their locations along CAT bus routes to allow carless residents to attend.

Public meetings are summarized in **Table 4-1**.

**Table 4-1. Public Meetings (Chronological)**

| Meeting | Dates | Representatives |
|---|---|---|
| Open House at Harrisburg Mall | October 18, 2018 | Public |
| Telephone Town Hall Meeting | March 16, 2021 | Public |
| In-person Public Meeting (East Shore) | November 9, 2021 | Public |
| In-person Public Meeting (West Shore) | November 10, 2021 | Public |

**Summary of Public Comments – February 19 to March 20, 2021.** Common comment themes seen throughout the virtual public meeting comment period included:

- Several commenters indicated a general dissatisfaction for the project funding mechanism. This dissatisfaction was largely due to:
    - Personal financial concerns;
    - Pandemic-related financial concerns; and
    - Impacts to tourism and the economy as individuals may be less likely to cross between the west and east shores.
- Several commenters expressed concern with traffic potentially diverting through local neighborhoods to avoid paying the toll. Concerns included:
    - Additional traffic and congestion on local streets;
    - Impacts to air quality in local neighborhoods due to increased traffic;
    - Additional noise in local communities; and
    - Congestion on other local, non-tolled bridges to get into downtown Harrisburg due to toll avoidance.
- Several commenters suggested other means of raising money to fund the replacement of the bridge. Many suggestions were in favor of tax and fee increases.

- Several commentors shared their support of tolling the bridge. Reasons for support included:
  - Feel that non-gas using vehicles are paying their share;
  - Are against tax and fee increases;
  - Are in favor of tolling those who use the infrastructure to fund its needed replacement; and
  - Are in favor of improving bridge safety.
- Several commenters brought up concerns for low-income populations. Concerns included:
  - Increased financial hardships for low-income populations by adding a toll to the bridge; and
  - The need for discount or mitigation measures for those who cannot afford the toll.
- Several commenters brought up concerns regarding project construction. Concerns included:
  - Potential historic property impacts;
  - Potential noise or environmental impacts; and
  - Potential property takes or business disruptions.

**Summary of Public Comments – October 25 to November 24, 2021.** Common comment themes seen throughout the virtual public meeting comment period included:

- Several commenters indicated a general dissatisfaction with the project. This dissatisfaction was largely due to:
  - Bridge tolling; and
  - Toll diversion traffic impacts.
- Several commenters indicated concerns regarding traffic congestion. These concerns included:
  - Toll diversions causing traffic congestion on the west shore;
  - Traffic bottlenecks caused by toll diversion on the other bridge crossings (e.g., Market Street Bridge, Harvey Taylor Bridge);
  - Current traffic bottlenecks along the projected diversion routes that would become worse with toll diversion; and
  - York County driver diversion when traveling to Harrisburg for work.
- Several commenters indicated that they would plan to avoid the bridge toll and take alternative routes if a toll is implemented on the South Bridge. Reasons for toll avoidance included:
  - Financial impacts; and
  - Opposition to tolls.

- Several commenters indicated their opposition to tolling the bridge. Reasons for opposition included:
  - Economic impact to the Harrisburg area;
  - Financial impact to bridge users; and
  - Frustration that other funding cannot cover the bridge replacement.
- Several commenters provided suggestions for other alternatives for funding for the project. These suggestions included:
  - Federal infrastructure bill;
  - Collecting lost revenue from license plate identification;
  - Changing funding for the state police;
  - Tolling other interstates or bridges; and
  - Adjusting the budget from other projects.
- Several commenters indicated an interest in additional pedestrian and bicycle accommodations in the project area. Suggestions included:
  - Adding a separated pedestrian/bicycle path on the South Bridge;
  - Converting the old railroad bridge into a pedestrian/bicycle crossing; and
  - Increasing non-automobile mobility in the Harrisburg area.
- Several commenters indicated financial concerns. Concerns included:
  - High cost per year for frequent bridge users; and
  - Impacts to low-income individuals.
- Several commenters focused on project construction and design. Comments included:
  - Support for widening the bridge to five lanes;
  - Support of and opposition to the Lemoyne interchange reconfiguration;
  - Support of (homeowners) and opposition to (business) noise walls; and
  - General project design satisfaction.
- Several comments were received about the toll discount program. These comments included:
  - Interest in local users receiving a toll discount if they do not qualify for the toll-free bridge access for low-income bridge users.
- Several comments indicated general project support. These comments included:
  - Support for the project design;
  - Support for funding via tolling;
  - Support for bridge replacement and widening; and
  - Support for proposed west shore design improvements.

- Other common themes that were included in less than fifteen comments included:
  - Business interruptions (14)
  - Information request (13)
  - Tax increase opposition (12)
  - Toll support (12)
  - Environmental justice issues (9)
  - Geographic equity (9)
  - Tourism and economy (8)
  - Air quality (7)
  - Bridge safety (7)
  - Property takes or business displacement (7)
  - Noise (6)
  - State police siphoning funds (5)
  - Tax increase support (4)
  - Construction traffic detours (3)
  - Non-gas vehicles not paying their share (3)
  - Website criticism (3)
  - Mailing list request (2)
  - Managed lanes support (2)
  - User Fee support (2)
  - Legalize marijuana (1)
  - Pandemic (1)

The EA comparing the effects of the No Build Alternative and the Build Alternative with bridge tolling was prepared and was made available for official public review and comment on May 10, 2022. Public Hearings were scheduled to be held on May 24 & 25, 2022, but were cancelled when all work related to the MBP3 initiative ceased May 18, 2022 due to a court ordered injunction. The comments received during the EA comment period (May 10 to June 9, 2022) have been reviewed, considered, and where appropriate, additional information was incorporated into this EA.

Subsequently, Act 84 of 2022 amended the P3 law and revoked PennDOT's ability to implement mandatory tolls such as the proposed bridge tolling under the MBP3 initiative. As a result of the lawsuits and the subsequent enactment of Act 84 of 2022, PennDOT is moving the I-83 South Bridge Project forward, but without tolling.

## 4.2 Agency and Stakeholder Coordination

### 4.2.1 PEL Agency Outreach

During the *Pathways Alternative Funding PEL Study*, PennDOT conducted outreach with federal and state resource agencies. PennDOT participated in an Agency Coordination Meeting (ACM) on January 27, 2021. The purpose of the meeting was to present an overview of the Pathways

Program and solicit feedback for the *Pathways Alternative Funding PEL Study*. The meeting was attended by representatives from a number of federal and state agencies, including resource agencies, transportation agencies, and RPOs and MPOs. Issues discussed included bridge tolling and procurement processes, maintenance, schedule, and the environmental process. Environmental justice concerns and potential mitigation for low-income travelers were also discussed. In addition to the ACM, meetings were held with the USEPA to discuss the environmental justice methodology included in the *Pathways Alternative Funding PEL Study*, which was then applied to the candidate projects in the MBP3 Initiative, including the I-83 South Bridge Project. Outreach was also conducted with Federally Recognized Tribes with ties to Pennsylvania.

### 4.2.2 Environmental Document-related Agency and Stakeholder Coordination

During the development of this EA, coordination was conducted with appropriate federal, state, and local agencies to obtain information relative to the project area; identify concerns; and obtain feedback regarding the proposed project, including bridge tolling. Meetings and stakeholder coordination associated with the ESS3 Project, covering the Front Street/2nd Street interchange and viaduct, were held between 2017 and 2019. Coordination meetings associated with the western part of the project (South Bridge and Lemoyne interchange) were held in 2020 and 2021. Agency meetings and other stakeholder coordination meetings supporting the development of the EA are summarized in **Table 4-2**.

**Table 4-2. Agency and Stakeholder Meetings (Chronological)**

| Meeting | Dates | Representatives |
|---|---|---|
| Swatara Township Coordination Meeting | May 10, 2017 | Swatara Township |
| Paxtang Borough Coordination Meeting | May 24, 2017 | Paxtang Borough |
| City of Harrisburg Coordination Meeting | May 24, 2017 | City of Harrisburg |
| City of Harrisburg Coordination Meeting | February 9, 2018 | City of Harrisburg |
| Foose School Meeting | March 21, 2018 | School Representatives |
| 29th Street Methodist Church Community Leader Interview | April 9, 2018 | Church Representatives |
| Traffic Incident Management (TIM) Coordination Meeting | July 30, 2018 | EMS Reps: Lebanon and Dauphin Counties |
| Agency Coordination Meeting | September 26, 2018 | DCNR, PADEP Southcentral Regional Office, PADEP, FHWA, PFBC, PGC, SHPO/PHMC, USACE |
| Public Official's Briefing Meeting | October 18, 2018 | FHWA, Legislators, Dauphin County Commissioners, Dauphin County, Swatara Township, City of Harrisburg, Paxtang Borough |
| Capital Area Greenbelt | January 15, 2019 | FHWA, DCPD /CAGA, Susquehanna Area Mountain Bike Association (SAMBA) |

| Meeting | Dates | Representatives |
|---|---|---|
| City of Harrisburg Coordination Meeting | February 19, 2019 | City of Harrisburg |
| Capital Area Greenbelt | February 19, 2019 | FHWA, DCPD/CAGA, SAMBA, City of Harrisburg |
| PFBC Coordination Meeting | February 26, 2019 | PFBC |
| Harrisburg River Rescue and Harrisburg Bureau of Fire Meeting | March 14, 2019 | Harrisburg River Recue and Harrisburg Bureau of Fire |
| City of Harrisburg Coordination Meeting | April 29, 2019 | City of Harrisburg |
| ACM | September 23, 2020 | USACE, USFWS, USEPA, PFBC, PADEP, PGC, PHMC, DCNR |
| PFBC Coordination Meeting | October 14, 2020 | PFBC – Shad Migration Program |
| Permitting Agency Meeting #1 (Chapter 102/105/Section 404) | December 14, 2020 | USACE, PFBC, PADEP |
| Norfolk Southern Coordination Meeting | January 27, 2021 | Norfolk Southern Railroad Company |
| Public Officials Briefing | February 17, 2021 | State Representatives and Senators from Affected Counties |
| Public Officials Briefing | February 19, 2021 | Lemoyne Borough Staff; City of Harrisburg; Dauphin, York, and Perry County Commissioners |
| Lemoyne Borough Coordination Meeting | February 24, 2021 | Lemoyne Borough Staff |
| Harrisburg City Council | March 2, 2021 | Harrisburg City Council |
| Lemoyne Borough Council Coordination Meeting | March 4, 2021 | Lemoyne Borough Council |
| Lemoyne Borough Wastewater Treatment Facility | March 5, 2021 | Lemoyne Borough Staff and Wastewater Treatment Facility Staff |
| New Cumberland Borough Coordination Meeting | March 11, 2021 | New Cumberland Borough Council |
| Shipoke Neighborhood Association | March 22, 2021 | Shipoke residents (part of consulting party coordination) |
| Section 106 Consulting Party Meeting | March 29, 2021 | Consulting Party Representatives |
| Permitting Agency Meeting #2 – H&H Discussion | April 21, 2021 | USACE, USFWS, PADEP, PFBC |
| West Shore Public Utility Commission (PUC) Meeting | May 20, 2021 | PUC Representatives |
| NPDES Coordination Meeting | June 4, 2021 | PADEP, Dauphin County Conservation District, Cumberland County Conservation District |
| Permitting Agency Meeting #3 – Water Quality Discussion | July 1, 2021 | USACE, USEPA, FHWA, PADEP |
| Lemoyne Borough Mural Virtual Meeting | July 15, 2021 | Lemoyne Borough Staff |
| West Shore Railroad Coordination Meeting | July 23, 2021 | Norfolk Southern Railroad Company |

| Meeting | Dates | Representatives |
|---|---|---|
| Traffic Diversion Workshop | July 29, 2021 | Lemoyne Borough, Wormleysburg Borough, City of Harrisburg, Business Representatives, and Special Interest Group Representatives |
| Utility Coordination Meeting #1 | August 5, 2021 | Lemoyne Borough, PA American Water, UGI Utilities, Capital Region Water, PPL Electric Utilities, Verizon, Frontier |
| Lemoyne Borough Coordination Meeting | August 30, 2021 | Lemoyne Borough Staff |
| East Shore PUC Meeting | October 19, 2021 | PUC Representatives |
| Lemoyne Borough Mural Meeting | October 22, 2021 | Lemoyne Borough Staff |
| Diversion Workshop Follow Up Briefings | October 25, 2021 | Lemoyne Borough, Wormleysburg Borough, City of Harrisburg, Business Representatives, and Special Interest Group Representatives who attended the Diversion Workshop |
| Editorial Board Meeting | October 27, 2021 | Media |
| Local Elected Officials Listening Session | November 15, 2021 | Camp Hill, Wormleysburg, New Cumberland Borough, State Representative Delozier, State Representative Keefer, Silver Spring Township, Cumberland County, Lower Allen Township, Borough of Mechanicsburg, Lemoyne Borough, Tri-County Regional Planning Commission, Hampden Township, State Senator Regan |
| Dauphin County Commissioners Listening Session | February 7, 2022 | Dauphin County Commissioners |
| ACM | June 28, 2023 | USACE, USFWS, USEPA, PFBC, PADEP, PGC, PHMC, DCNR |
| CACH/City of Harrisburg Meeting on homeless encampment | August 30, 2023 | CACH Board, PennDOT |
| Pre-application Meeting | October 3, 2023 | USACE, PADEP, PFBC, Dauphin County Conservation District, Cumberland County Conservation District |

# 4.3 Environmental Justice Outreach

## 4.3.1 PEL Environmental Justice Outreach

In addition to the outreach described above, PennDOT conducted outreach targeted to low-income, minority, and other underserved populations in the following ways. This outreach was conducted when tolling was under consideration; therefore, concerns and issues expressed were largely

related to effects of tolling. As tolling is no longer under consideration, issues and concerns related to tolling are no longer relevant.

**Equity in Transportation Working Group**. During the *Pathways Alternative Funding PEL Study* process, an Equity in Transportation Working Group was convened to provide input on the potential impacts to low-income, minority, and other underserved populations, across Pennsylvania. The group was developed to provide statewide, high-level representation for historically underserved populations. Invitations were sent to 50 entities. Participants discussed a wide range of issues focused on low-income, minority, and other underserved populations. As tolling was under consideration at the time, concerns focused on potential impacts of diverting traffic into low-income and/or minority communities, resulting in increased pollution, congestion, and other impacts, as well as the financial impact of tolling on low-income persons.

**Digital Survey.** To elicit feedback about potential funding alternatives, a digital survey was administered to low-income and minority Pennsylvanians during the *Pathways Alternative Funding PEL Study* process. Survey respondents were recruited through a paid survey panel. Of the 311 survey respondents, 201 reported a minority race/ethnicity, and 181 reported their household income as $25,000 or less. The goal of the survey was to gather input from minority and low-income Pennsylvanians on their impressions of the alternative funding options. Of the funding options, participants were most in favor of managed lanes. For minority Pennsylvanians who also reported household incomes of $25,000 or less, the top option was split between bridge tolling and managed lanes. As tolling was under consideration at the time, key concerns from survey respondents included:

- Concerns that tolls could cause congestion or hurt the economy;
- Concerns regarding how funds would be used;
- Concerns that the options unfairly affect low-income populations; and
- Concerns that administrative costs would outweigh the benefits.

### 4.3.2 South Bridge-specific Environmental Justice Outreach

During development of this EA, PennDOT conducted outreach to the entirety of the project area and potential diversion route area. A wide variety of outreach was conducted for the February/March 2021 and October/November 2021 public meetings to ensure that environmental justice communities within the project area were reached regarding the project and opportunities to comment.

This outreach included direct mail postcards to more than 14,000 homes to reach those without Internet access; legal advertisements in both English and Spanish newspapers to reach both English and Spanish speakers in the area; posters sent to knowledgeable parties in the area to reach out to the communities they represent; and email blasts, social media posts, and traditional media stories.

For the February/March 2021 comment period, a Telephone Town Hall event was held to provide an opportunity to comment for those without Internet access that was in line with current

COVID-19 restrictions and guidelines. In October/November 2021, two in-person public meetings were held, one on the east shore at the Harrisburg East Mall and one on the west shore at the Radisson/Penn Harris Hotel, to provide easy access via public transportation to the meetings throughout the project area. Interpretive services were available at each meeting site.

Environmental justice outreach performed as a part of the ESS3 Project (including the viaduct and the Front Street/2nd Street interchange) included targeted outreach to interview community leaders to obtain an understanding of the community context and how limited financial means and mobility challenges influence the community relative to accessing basic goods and services or employment and higher educational opportunities.

The project team produced an informational flyer in both English and Spanish, which was distributed throughout the study area and surrounding communities. Flyers were placed at municipal offices, restaurants, post offices, supermarkets, retail stores, places of worship, and health centers for maximum visibility. Additionally, postcards describing the project and providing contact information were distributed at the Harrisburg Housing Authority Community Day at Hall Manor on August 17, 2018.

The project team contacted organizations to ask if they could suggest any community members or leaders who may be able to provide the team with an introduction to the wider community in order to disseminate information about the project and any forthcoming public meetings. These organizations included:

- Harrisburg Area National Association for the Advancement of Colored People – March 28, 2018
- Latino Connection – March 28, 2018
- Tri-County Community Action – March 29 and April 5, 2018

The project team attempted to contact the following organizations but were unsuccessful:

- Hispanic Chamber of Commerce – March 19, 2018
- Bethany AME Church – March 9 and 26, 2018
- Harrisburg Boys & Girls Club – March 16 and 26, 2018
- King Community Center – March 27 and April 5 and 6, 2018
- Senior LIFE Harrisburg – March 9, 21, and 26, 2018

On August 30, 2023, PennDOT held a meeting with the CACH Board to discuss the homeless encampment located on the east shore in the vicinity of the South Bridge, the Front Street/2nd Street Interchange and the area to the south planned to be used as a staging area for construction of the South Bridge project. Those occupying the homeless encampment will need to move for the duration of project construction. Those representing the Board included the City of Harrisburg's Director of Housing and Economic Development (also the CACH Board Chair), Dauphin County's Human Services Director, and representatives of United Way, Tri County Community Action, Family Promise, and The Foundation for Enhancing Communities. The conversation focused on

how best to notify those in the encampment of the need to move, the timing of moving them, and to discussion of services CACH, the City, the County and others could offer to facilitate moving the encampment. CACH Board representatives were appreciative of the early conversation and committed to working with PennDOT to move the encampment inhabitants when construction staging needs to start. The importance of advanced notice of the need to move and making the encampment aware of their options was emphasized.

HARRISBURG
I-83 CAPITAL BELTWAY
SR 0083, SECTION 094
DAUPHIN COUNTY, PA

# Appendix A

## *SOUTH BRIDGE DESIGN PLANS* (AUGUST 2023)

# Roadway Plans

Preliminary Design Plans for constructing the I-83 South Bridge project including reconstruction and widening of the South Bridge, reconstruction of the viaduct from the east shore of the Susquehanna River to Cameron Street along with the Front Street/2nd Street interchange, reconfiguration of the Lemoyne interchange, and reconstruction and widening of the S. 3rd Street (SR 2035) Bridge in Lemoyne as described in greater detail in Section 2.1.1 Proposed South Bridge Alternative, of the EA.

| DISTRICT | COUNTY | ROUTE | SECTION | SHEET |
|---|---|---|---|---|
| 8-0 | CUMBERLAND | 0083 | 094 | 11 OF 103 |
| LEMOYNE BOROUGH | | | | |

| REVISION NUMBER | REVISIONS | DATE | BY |
|---|---|---|---|
| | | | |
| | | | |

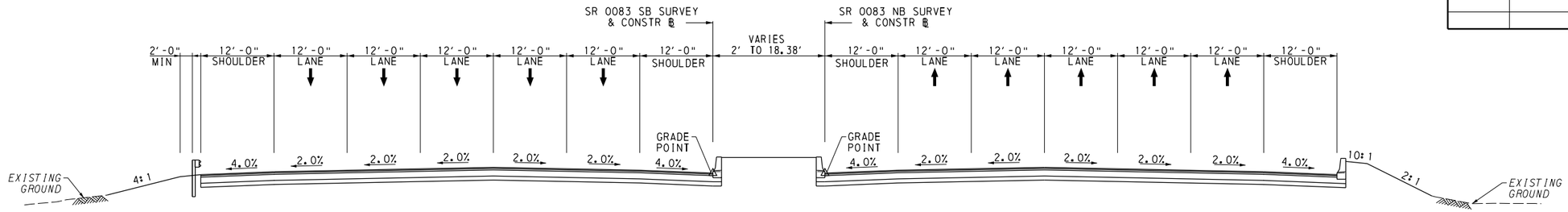


## TYPICAL TANGENT SECTION
## SR 0083

STA 191+87.43 TO STA 196+91.63 NB
STA 191+88.86 TO STA 196+96.74 SB
NOT TO SCALE

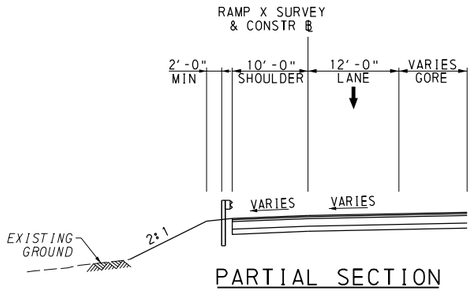


## PARTIAL SECTION

STA 191+88.86 TO STA 195+35.73

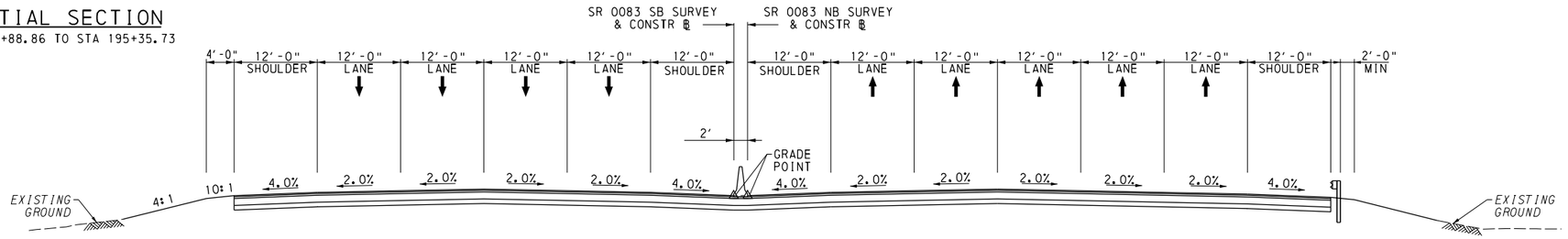


## TYPICAL TANGENT SECTION
## SR 0083

STA 170+53.28 TO STA 191+87.43 NB
STA 170+53.80 TO STA 191+88.86 SB
NOT TO SCALE

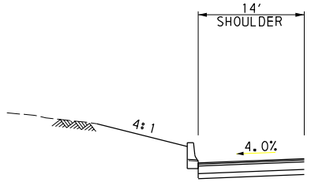


## PARTIAL SECTION

STA 172+43.93 TO STA 177+43.93

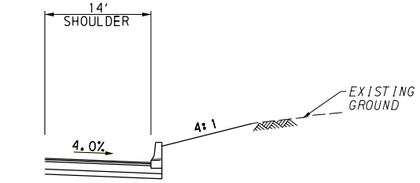


## PARTIAL SECTION

STA 173+43.93 TO STA 177+43.93

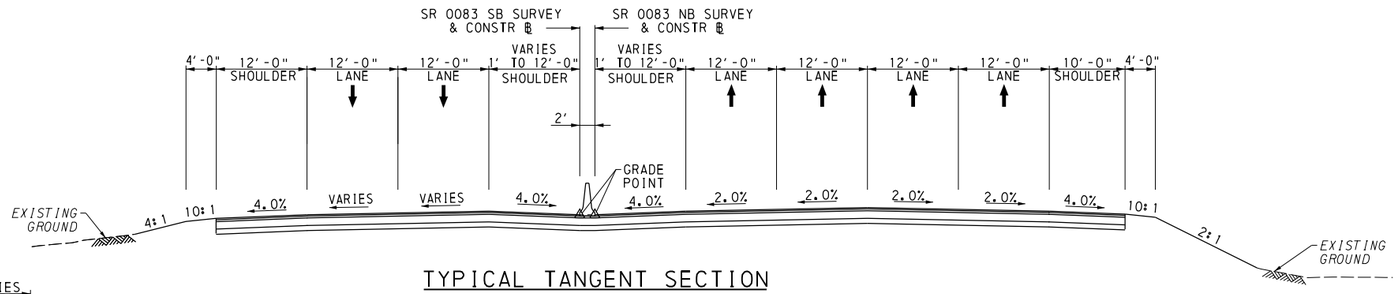


## TYPICAL TANGENT SECTION
## SR 0083

STA 162+27.56 TO STA 170+53.28 NB
STA 162+28.02 TO STA 170+53.80 SB
NOT TO SCALE

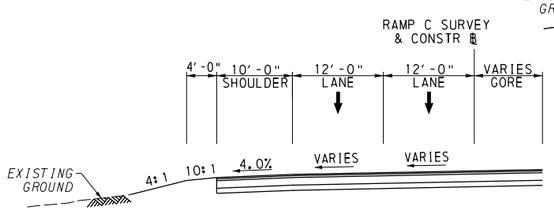


## PARTIAL SECTION

STA 165+51.28 TO STA 170+53.80

9/26/2023
FILENAME: 43377WS-s-cv-typ01.dgn

| DISTRICT | COUNTY | ROUTE | SECTION | SHEET |
|---|---|---|---|---|
| 8-0 | CUMBERLAND | 0083 | 094 | 12 OF 103 |
| LEMOYNE BOROUGH | | | | |
| REVISION NUMBER | REVISIONS | | DATE | BY |
| | | | | |
| | | | | |

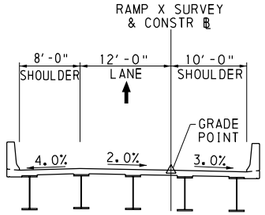


## TYPICAL BRIDGE SECTION
## RAMP X
STA 512+28.50 TO STA 514+88.50
NOT TO SCALE

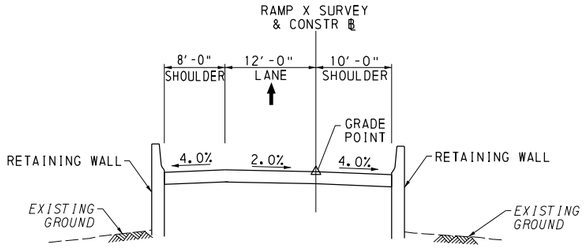


## TYPICAL TANGENT SECTION
## RAMP X
STA 510+07.00 TO STA 512+28.50
NOT TO SCALE

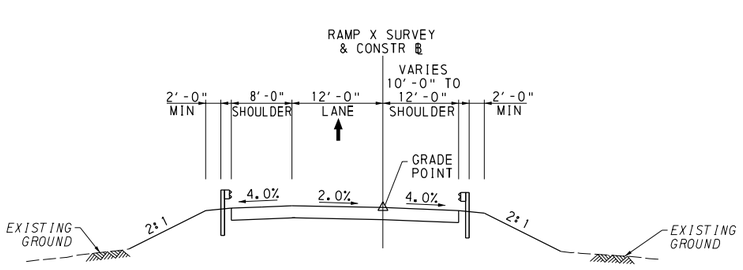


## TYPICAL TANGENT SECTION
## RAMP X
STA 506+92.17 TO STA 510+07.00
NOT TO SCALE

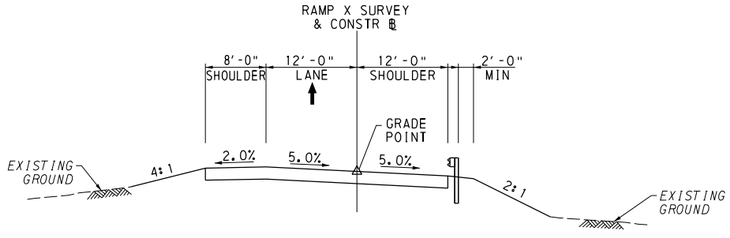


## TYPICAL SUPERELEVATED SECTION
## RAMP X
STA 500+00.00 TO STA 506+92.17
NOT TO SCALE

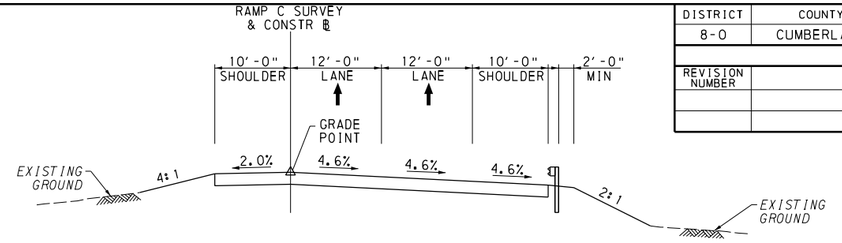


## TYPICAL SUPERELEVATED SECTION
## RAMP C
STA 1001+82.60 TO STA 1003+44.82
NOT TO SCALE

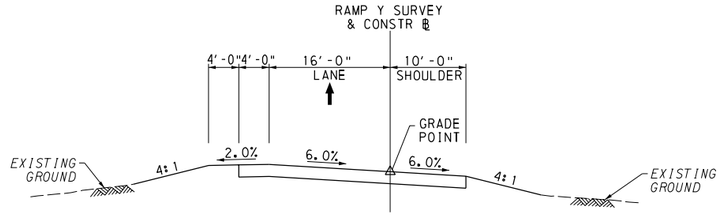


## TYPICAL SUPERELEVATED SECTION
## RAMP Y
STA 901+59.01 TO STA 908+41.52
NOT TO SCALE

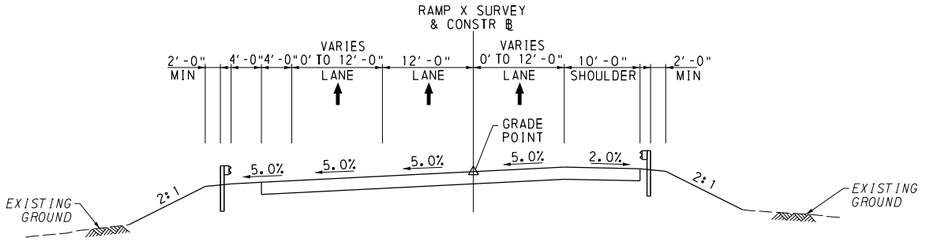


## TYPICAL SUPERELEVATED SECTION
## RAMP X
STA 515+88.54 TO STA 521+57.80
NOT TO SCALE

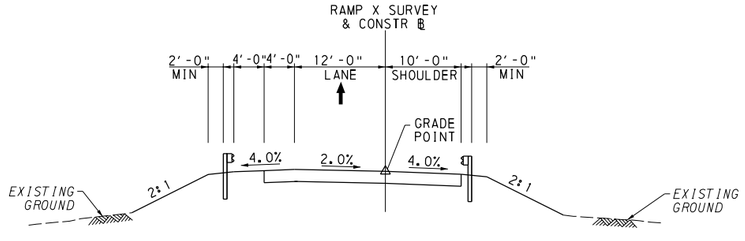


## TYPICAL TANGENT SECTION
## RAMP X
STA 514+88.50 TO STA 515+88.54
NOT TO SCALE

9/26/2023
FILENAME: 43377WS-s-cv-typ02.dgn

| DISTRICT | COUNTY | ROUTE | SECTION | SHEET |
|---|---|---|---|---|
| 8-0 | CUMBERLAND | 0083 | 094 | 13 OF 103 |
| LEMOYNE BOROUGH | | | | |

| REVISION NUMBER | REVISIONS | DATE | BY |
|---|---|---|---|
| | | | |
| | | | |

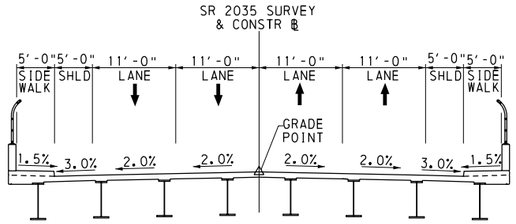


## TYPICAL BRIDGE SECTION
## SR 2035

STA 406+65.75 TO STA 409+50.75
NOT TO SCALE

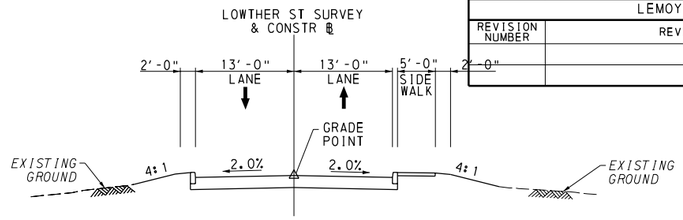


## TYPICAL SECTION
## LOWTHER STREET

STA 301+00.00 STA 326+68.78
NOT TO SCALE

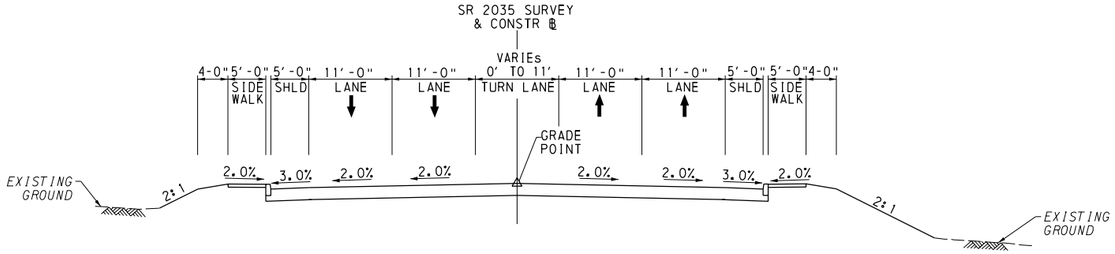


## TYPICAL SECTION
## SR 2035

STA 405+08.57 TO STA 406+65.75
NOT TO SCALE

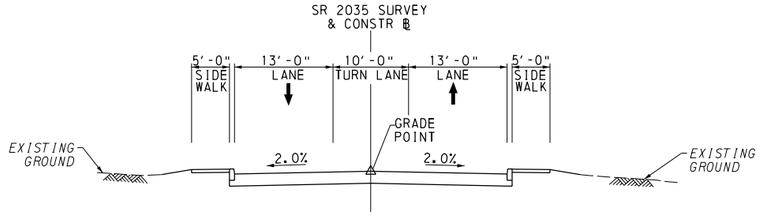


## TYPICAL SECTION
## SR 2035

STA 413+40.44 TO STA 414+25.00
NOT TO SCALE

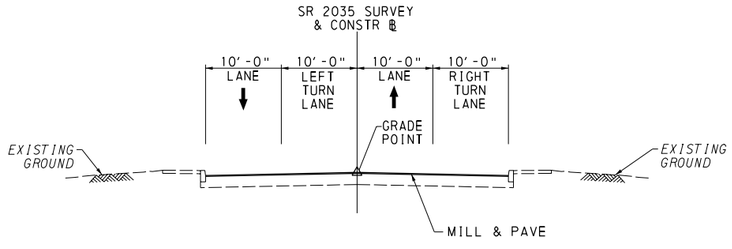


## TYPICAL SECTION
## SR 2035

STA 402+00.00 TO STA 404+50.00
NOT TO SCALE

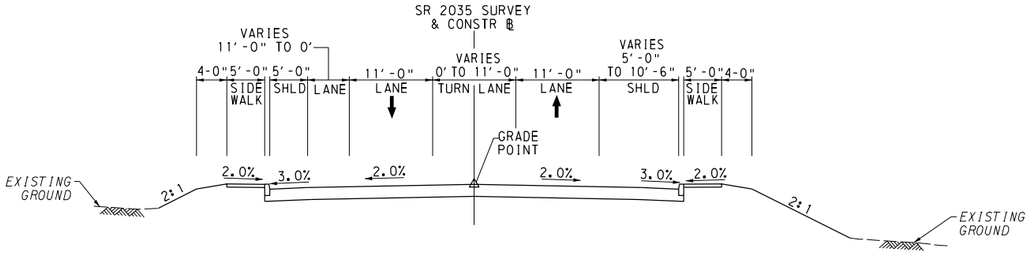


## TYPICAL SECTION
## SR 2035

STA 409+50.75 TO STA 413+40.44
NOT TO SCALE

9/26/2023
FILENAME: 43377WS-s-cv-typ03.dgn

| DISTRICT | COUNTY | ROUTE | SECTION | SHEET |
|---|---|---|---|---|
| 8-0 | DAUPHIN | 0083 | 094 | 14 OF 103 |
| CITY OF HARRISBURG | | | | |

| REVISION NUMBER | REVISIONS | DATE | BY |
|---|---|---|---|
| | | | |
| | | | |

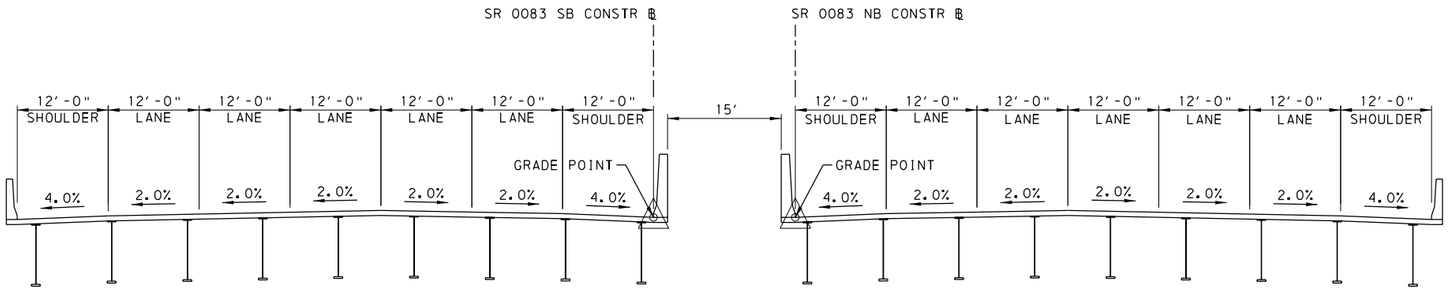


TYPICAL SECTION
SR 0083 - SOUTHBOUND
STA 196+86.41 TO STA 227+07.00
NOT TO SCALE

TYPICAL SECTION
SR 0083 - NORTHBOUND
STA 199+43.93 TO STA 211+77.00
NOT TO SCALE

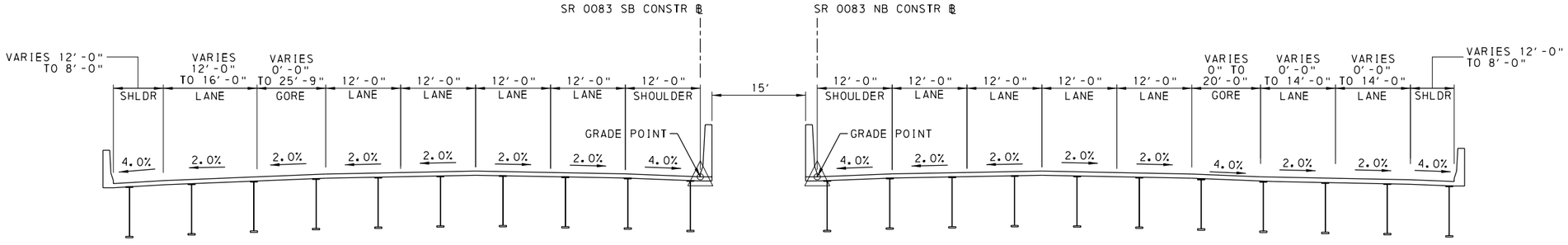


TYPICAL SECTION
SR 0083 - SOUTHBOUND
STA 227+07.00 TO STA 230+00.00
NOT TO SCALE

TYPICAL SECTION
SR 0083 - NORTHBOUND
STA 211+77.00 TO STA 221+97.00
NOT TO SCALE

9/26/2023
FILENAME: 43377-s-cv-typ01.dgn

| DISTRICT | COUNTY | ROUTE | SECTION | SHEET |
|---|---|---|---|---|
| 8-0 | DAUPHIN | 0083 | 094 | 15 OF 103 |
| CITY OF HARRISBURG | | | | |

| REVISION NUMBER | REVISIONS | DATE | BY |
|---|---|---|---|
| | | | |
| | | | |

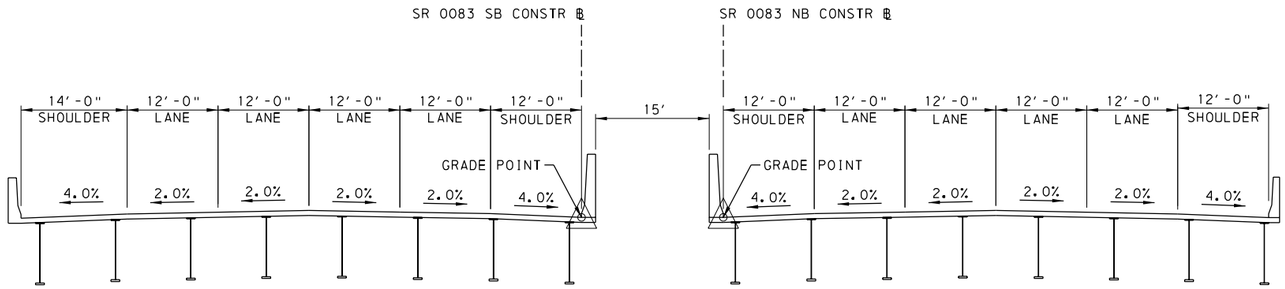


TYPICAL SECTION
SR 0083 - SOUTHBOUND
STA 230+00.00 TO STA 234+02.11
NOT TO SCALE

TYPICAL SECTION
SR 0083 - NORTHBOUND
STA 221+97.00 TO STA 230+00.00
NOT TO SCALE

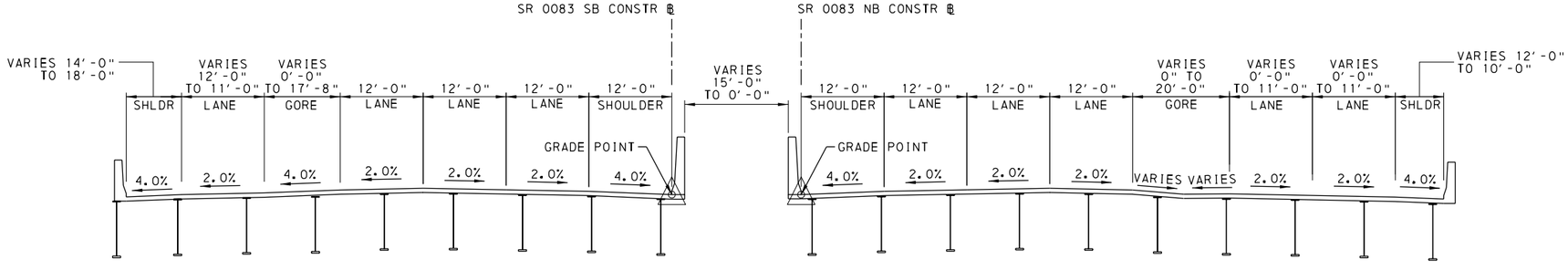


TYPICAL SECTION
SR 0083 - SOUTHBOUND
STA 234+02.11 TO STA 238+26.26
NOT TO SCALE

TYPICAL SECTION
SR 0083 - NORTHBOUND
STA 230+00.00 TO STA 236+03.83
NOT TO SCALE

9/26/2023
FILENAME: 43377-s-cv-typ02.dgn

| DISTRICT | COUNTY | ROUTE | SECTION | SHEET |
|---|---|---|---|---|
| 8-0 | DAUPHIN | 0083 | 094 | 16 OF 103 |
| CITY OF HARRISBURG | | | | |

| REVISION NUMBER | REVISIONS | DATE | BY |
|---|---|---|---|
| | | | |
| | | | |

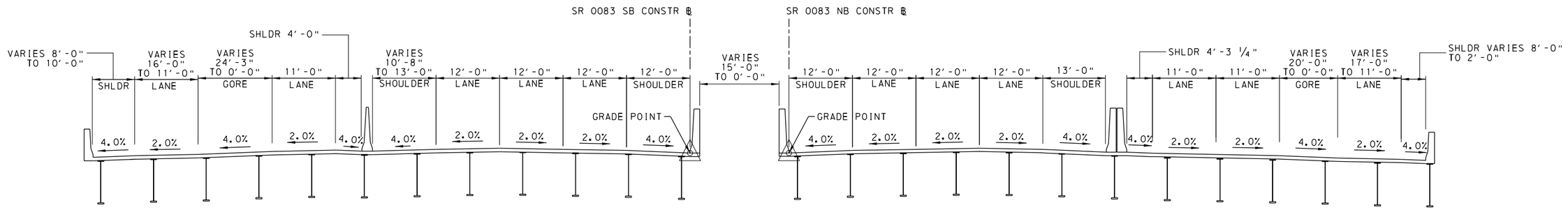


TYPICAL TANGENT SECTION
SR 0083 - SOUTHBOUND
STA 238+26.26 TO STA 240+25.10
NOT TO SCALE

TYPICAL TANGENT SECTION
SR 0083 - NORTHBOUND
STA 236+03.83 TO STA 237+63.02
NOT TO SCALE

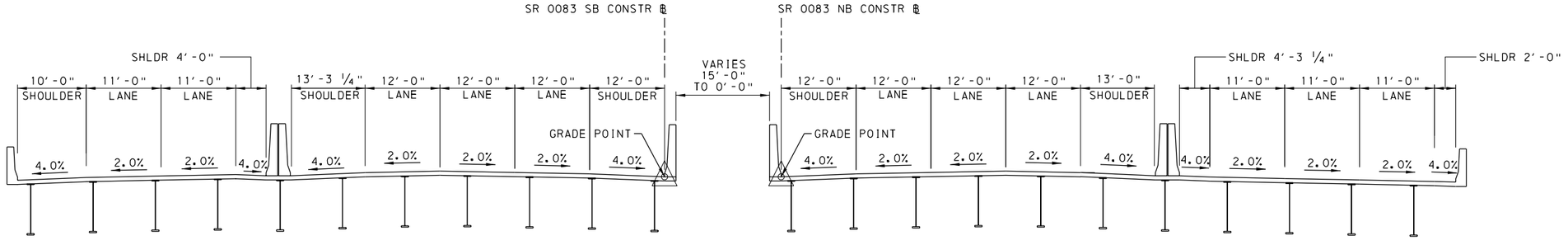


TYPICAL TANGENT SECTION
SR 0083 - SOUTHBOUND
STA 240+25.10 TO STA 249+19.75
NOT TO SCALE

TYPICAL TANGENT SECTION
SR 0083 - NORTHBOUND
STA 237+63.02 TO STA 249+17.04
NOT TO SCALE

9/26/2023
FILENAME= 43377-s-cv-typ03.dgn

| DISTRICT | COUNTY | ROUTE | SECTION | SHEET |
|---|---|---|---|---|
| 8-0 | DAUPHIN | 0083 | 094 | 17 OF 103 |
| CITY OF HARRISBURG | | | | |

| REVISION NUMBER | REVISIONS | DATE | BY |
|---|---|---|---|
| | | | |
| | | | |

## LEGEND

(A) SUPERPAVE ASPHALT MIXTURE DESIGN, WEARING COURSE, RPS, PG 64E-22, >=30 MILLION ESALS, 12.5 MM MIX, 2" DEPTH, SRL-E

(B) SUPERPAVE ASPHALT MIXTURE DESIGN, BINDER, PG 64E-22, >=30 MILLION ESALS, 19.0 MM MIX, 3" DEPTH

(C) SUPERPAVE ASPHALT MIXTURE DESIGN, BASE COURSE, PG 64S-22, >=30 MILLION ESALS, 25.0 MM MIX, 12" DEPTH

(D) SUBBASE 8" DEPTH (NO. 2A)

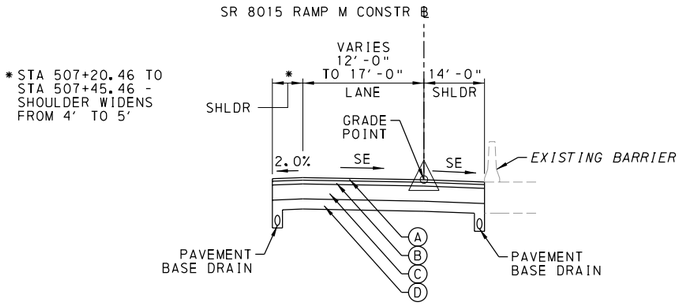


TYPICAL SUPERELEVATED SECTION
SR 8015 RAMP M

STA 500+00.00 TO STA 507+86.00
NOT TO SCALE

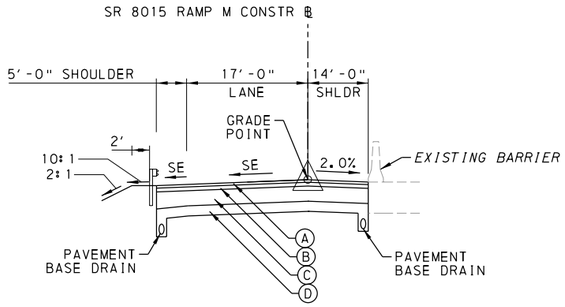


TYPICAL SUPERELEVATED SECTION
SR 8015 RAMP M

STA 507+86.00 TO STA 511+03.13
NOT TO SCALE

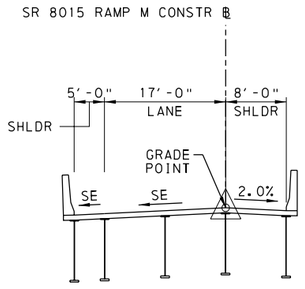


TYPICAL SUPERELEVATED SECTION
SR 8015 RAMP M

STA 511+03.13 TO STA 512+08.00
NOT TO SCALE

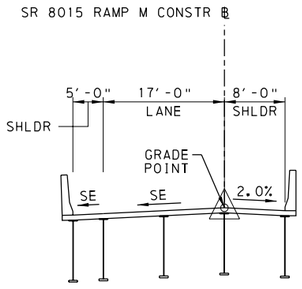


TYPICAL SUPERELEVATED SECTION
SR 8015 RAMP M

STA 512+08.00 TO STA 516+89.00
NOT TO SCALE

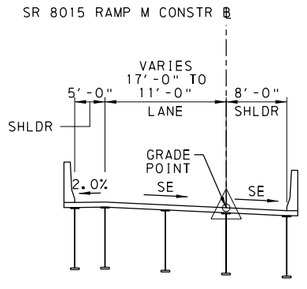


TYPICAL SUPERELEVATED SECTION
SR 8015 RAMP M

STA 516+89.00 TO STA 518+39.72
NOT TO SCALE

9/26/2023
FILENAME: 43377-s-cv-typ04.dgn

| DISTRICT | COUNTY | ROUTE | SECTION | SHEET |
|---|---|---|---|---|
| 8-0 | DAUPHIN | 0083 | 094 | 18 OF 103 |
| CITY OF HARRISBURG | | | | |

| REVISION NUMBER | REVISIONS | DATE | BY |
|---|---|---|---|
| | | | |
| | | | |

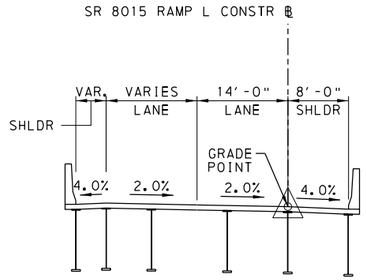


TYPICAL SECTION
SR 8015 RAMP L

STA 296+87.79 TO STA 311+89.49
NOT TO SCALE

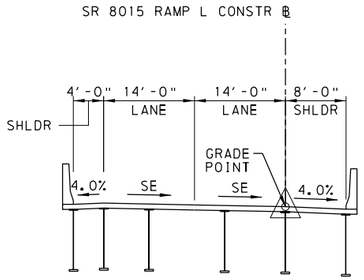


TYPICAL SUPERELEVATED SECTION
SR 8015 RAMP L

STA 311+49.89 TO STA 317+35.39
NOT TO SCALE

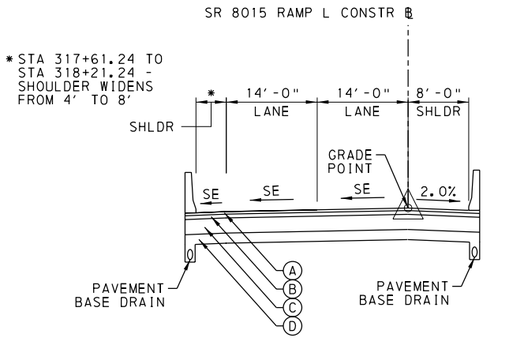


TYPICAL SUPERELEVATED SECTION
SR 8015 RAMP L

STA 317+35.39 TO STA 322+38.02
NOT TO SCALE

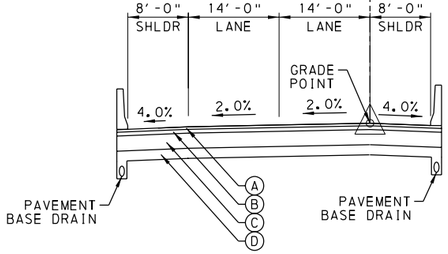


TYPICAL SECTION
SR 8015 RAMP L

STA 322+38.02 TO STA 324+75.44
NOT TO SCALE

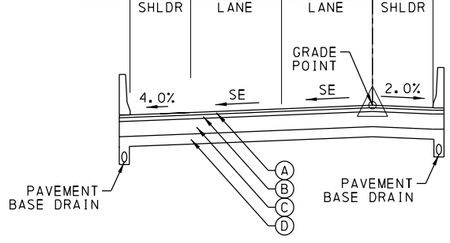


TYPICAL SUPERELEVATED SECTION
SR 8015 RAMP L

STA 324+75.44 TO STA 328+73.48
NOT TO SCALE

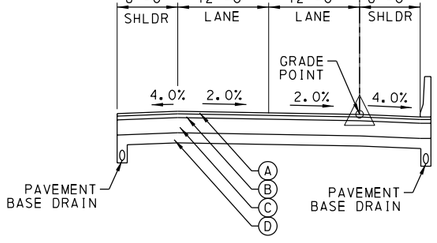


TYPICAL SECTION
SR 8015 RAMP L

STA 328+73.48 TO STA 331+87.06
NOT TO SCALE

LEGEND

(A) SUPERPAVE ASPHALT MIXTURE DESIGN, WEARING COURSE, RPS, PG 64E-22, >=30 MILLION ESALS, 12.5 MM MIX, 2" DEPTH, SRL-E

(B) SUPERPAVE ASPHALT MIXTURE DESIGN, BINDER, PG 64E-22, >=30 MILLION ESALS, 19.0 MM MIX, 3" DEPTH

(C) SUPERPAVE ASPHALT MIXTURE DESIGN, BASE COURSE, PG 64S-22, >=30 MILLION ESALS, 25.0 MM MIX, 12" DEPTH

(D) SUBBASE 8" DEPTH (NO. 2A)

9/26/2023
FILENAME: 43377-s-cv-typ05.dgn

| DISTRICT | COUNTY | ROUTE | SECTION | SHEET |
|---|---|---|---|---|
| 8-0 | DAUPHIN | 0083 | 094 | 19 OF 103 |
| CITY OF HARRISBURG | | | | |

| REVISION NUMBER | REVISIONS | DATE | BY |
|---|---|---|---|
| | | | |
| | | | |

## LEGEND

(A) SUPERPAVE ASPHALT MIXTURE DESIGN, WEARING COURSE, RPS, PG 64E-22, >=30 MILLION ESALS, 12.5 MM MIX, 2" DEPTH, SRL-E

(B) SUPERPAVE ASPHALT MIXTURE DESIGN, BINDER, PG 64E-22, >=30 MILLION ESALS, 19.0 MM MIX, 3" DEPTH

(C) SUPERPAVE ASPHALT MIXTURE DESIGN, BASE COURSE, PG 64S-22, >=30 MILLION ESALS, 25.0 MM MIX, 12" DEPTH

(D) SUBBASE 8" DEPTH (NO. 2A)

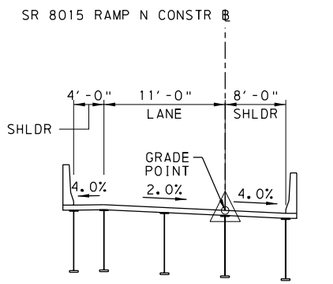


TYPICAL SECTION
SR 8015 RAMP N

STA 399+70.38 TO STA 400+95.00
NOT TO SCALE

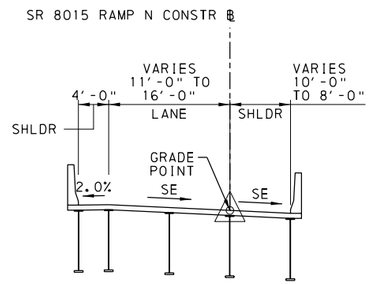


TYPICAL SUPERELEVATED SECTION
SR 8015 RAMP N

STA 400+95.00 TO STA 403+18.00
NOT TO SCALE

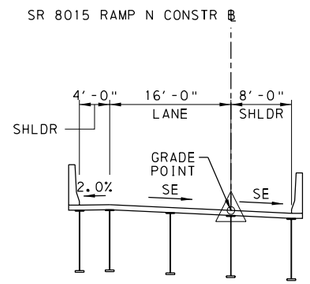


TYPICAL SUPERELEVATED SECTION
SR 8015 RAMP N

STA 403+18.00 TO STA 406+40.00
NOT TO SCALE

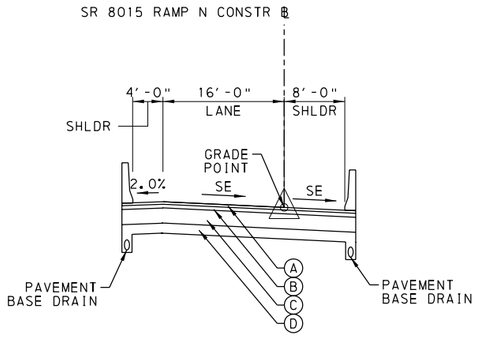


TYPICAL SUPERELEVATED SECTION
SR 8015 RAMP N

STA 406+40.00 TO STA 408+61.00
NOT TO SCALE

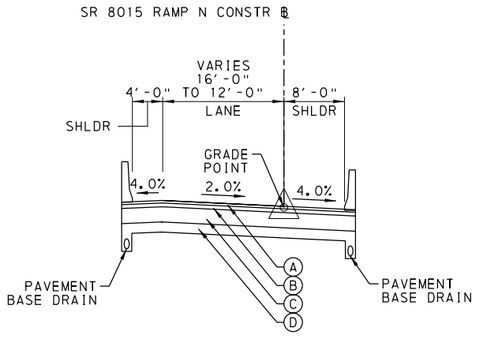


TYPICAL SECTION
SR 8015 RAMP N

STA 408+61.00 TO STA 410+13.00
NOT TO SCALE

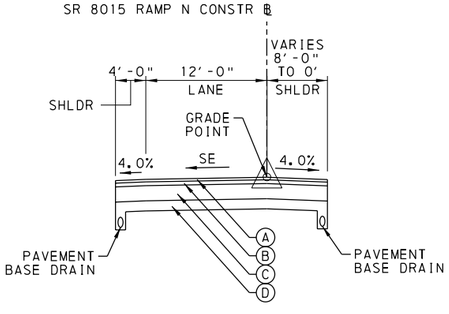


TYPICAL SUPERELEVATED SECTION
SR 8015 RAMP N

STA 410+13.00 TO STA 412+21.43
NOT TO SCALE

9/26/2023
FILENAME: 43377-s-cv-typ06.dgn

| DISTRICT | COUNTY | ROUTE | SECTION | SHEET |
|---|---|---|---|---|
| 8-0 | DAUPHIN | 0083 | 094 | 20 OF 103 |
| CITY OF HARRISBURG | | | | |

| REVISION NUMBER | REVISIONS | DATE | BY |
|---|---|---|---|
| | | | |
| | | | |

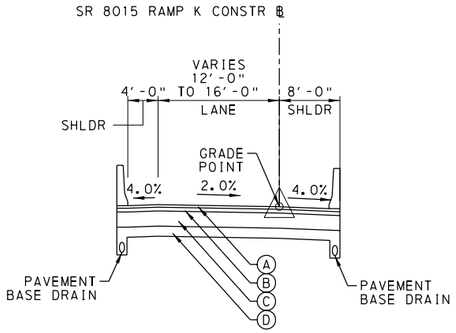


TYPICAL SECTION
SR 8015 RAMP K

STA 202+71.23 TO STA 203+27.00
NOT TO SCALE

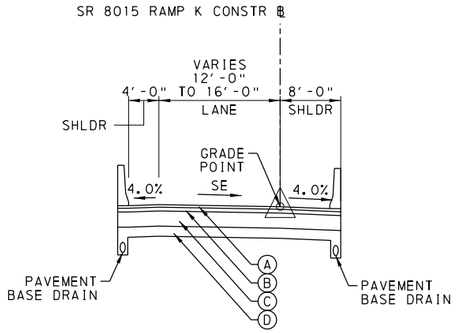


TYPICAL SUPERELEVATED SECTION
SR 8015 RAMP K

STA 203+27.00 TO STA 206+50.00
NOT TO SCALE

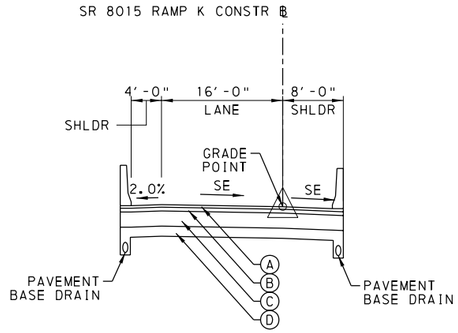


TYPICAL SUPERELEVATED SECTION
SR 8015 RAMP K

STA 206+50.00 TO STA 209+61.58
NOT TO SCALE

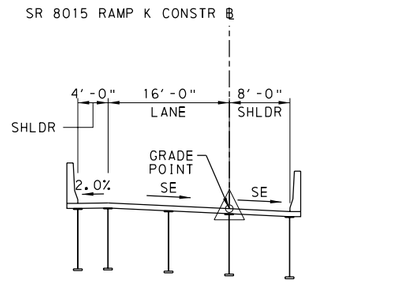


TYPICAL SUPERELEVATED SECTION
SR 8015 RAMP K

STA 209+61.58 TO STA 215+32.00
NOT TO SCALE

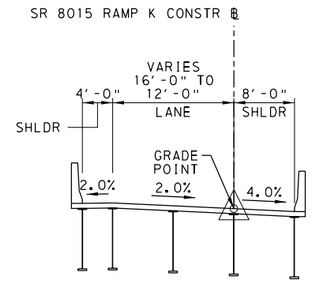


TYPICAL SECTION
SR 8015 RAMP K

STA 214+74.00 TO STA 216+94.46
NOT TO SCALE

## LEGEND

(A) SUPERPAVE ASPHALT MIXTURE DESIGN, WEARING COURSE, RPS, PG 64E-22, >=30 MILLION ESALS, 12.5 MM MIX, 2" DEPTH, SRL-E

(B) SUPERPAVE ASPHALT MIXTURE DESIGN, BINDER, PG 64E-22, >=30 MILLION ESALS, 19.0 MM MIX, 3" DEPTH

(C) SUPERPAVE ASPHALT MIXTURE DESIGN, BASE COURSE, PG 64S-22, >=30 MILLION ESALS, 25.0 MM MIX, 12" DEPTH

(D) SUBBASE 8" DEPTH (NO. 2A)

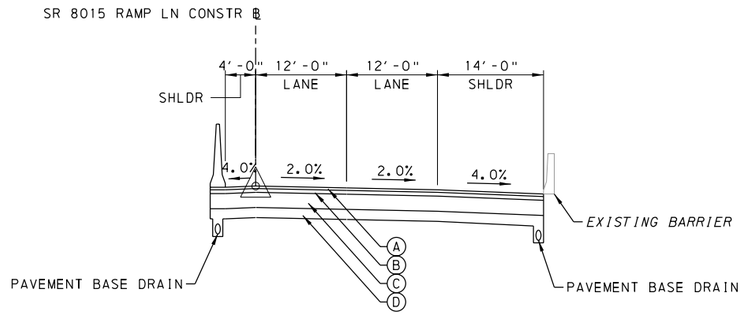


TYPICAL SECTION
SR 8015 RAMP KM

STA 199+50.00 TO STA 202+71.23
NOT TO SCALE

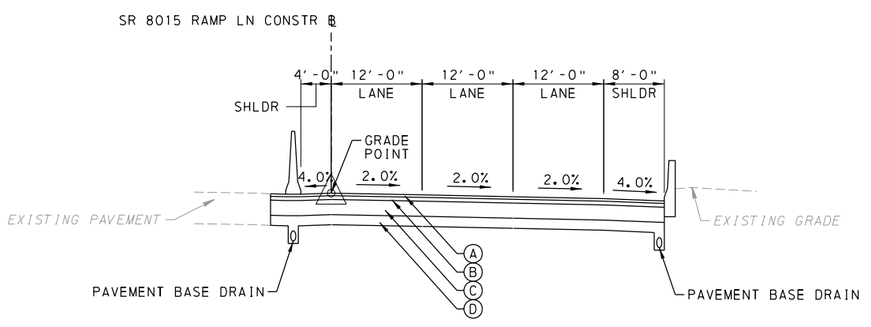


TYPICAL SECTION
SR 8015 RAMP LN

STA 331+87.06 TO STA 340+49.42
NOT TO SCALE

9/26/2023
FILENAME: 43377-s-cv-typ07.dgn

| DISTRICT | COUNTY | ROUTE | SECTION | SHEET |
|---|---|---|---|---|
| 8-0 | CUMBERLAND | 0083 | 094 | 21 OF 103 |
| LEMOYNE BOROUGH | | | | |

| REVISION NUMBER | REVISIONS | DATE | BY |
|---|---|---|---|
| | | | |
| | | | |

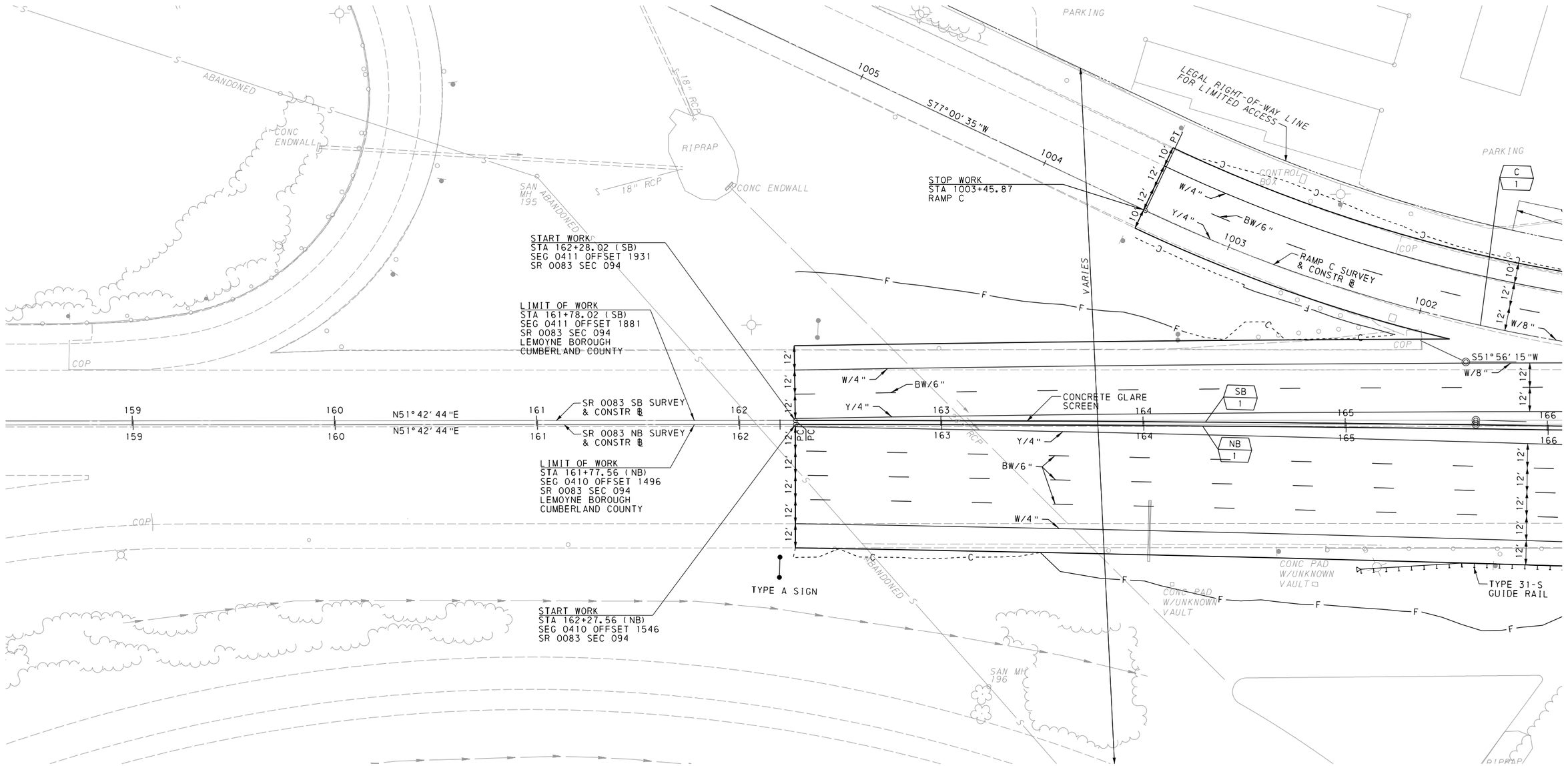


SCALE

0 25 50 FEET

| FOR SR 0083 (SB) PROFILE, SEE SHEET 61 |
|---|
| FOR SR 0083 (NB) PROFILE, SEE SHEET 47 |

9/26/2023
FILENAME: 43377WS-s-cv-pln01.dgn

| DISTRICT | COUNTY | ROUTE | SECTION | SHEET |
|---|---|---|---|---|
| 8-0 | CUMBERLAND | 0083 | 094 | 22 OF 103 |
| LEMOYNE BOROUGH | | | | |

| REVISION NUMBER | REVISIONS | DATE | BY |
|---|---|---|---|
| | | | |
| | | | |

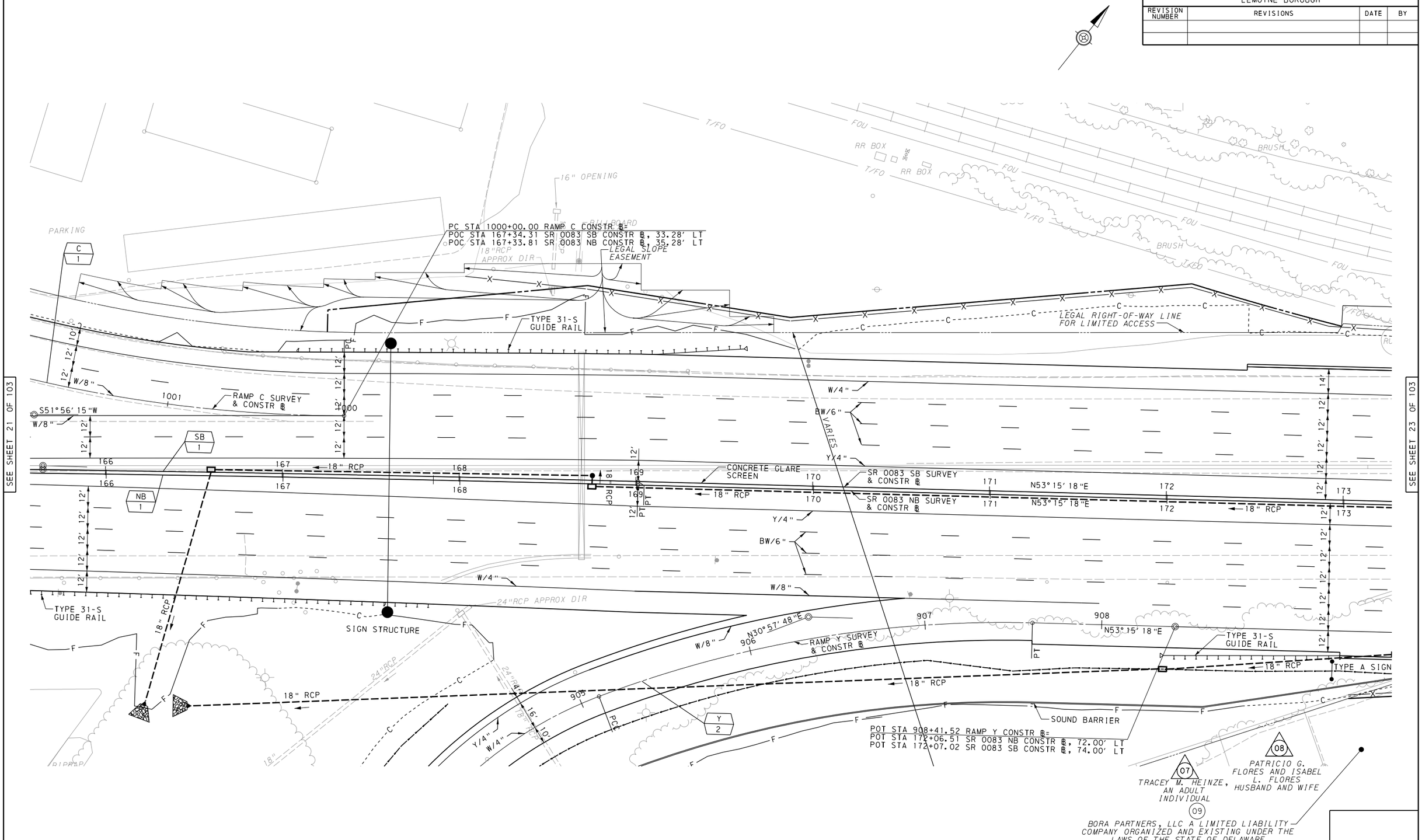


SEE SHEET 21 OF 103

SEE SHEET 23 OF 103

SEE SHEET 37 OF 103

| |
|---|
| FOR RAMP Y PROFILE, SEE SHEETS 76 & 77 |
| FOR RAMP C PROFILE, SEE SHEET 75 |
| FOR SR 0083 (SB) PROFILE, SEE SHEET 62 |
| FOR SR 0083 (NB) PROFILE, SEE SHEET 48 |

9/26/2023
FILENAME: 43377WS-s-cv-pln02.dgn

SEE SHEET 41 OF 103

| DISTRICT | COUNTY | ROUTE | SECTION | SHEET |
|---|---|---|---|---|
| 8-0 | CUMBERLAND | 0083 | 094 | 23 OF 103 |
| LEMOYNE BOROUGH | | | | |

| REVISION NUMBER | REVISIONS | DATE | BY |
|---|---|---|---|
| | | | |
| | | | |

## EXISTING STRUCTURE DATA

3RD ST OVER I-83
2-SPAN P/S CONC ADJ BOX BEAM BRIDGE
WITH 2 STEEL FASCIA GIRDERS
SPANS: SPAN 1 = 65'-0"
SPAN 2 = 51'-0"
VERT CLEAR = 18'-5"
SKEW = 79°00'00"
CLEAR ROADWAY = 45'-1"

3RD ST OVER NSRR
1-SPAN STEEL PLATE GIRDER BRIDGE
SPAN: 66'-2"
VERT CLEAR = 21'-2"
SKEW = 82°30'00"
CLEAR ROADWAY = 40'-0"

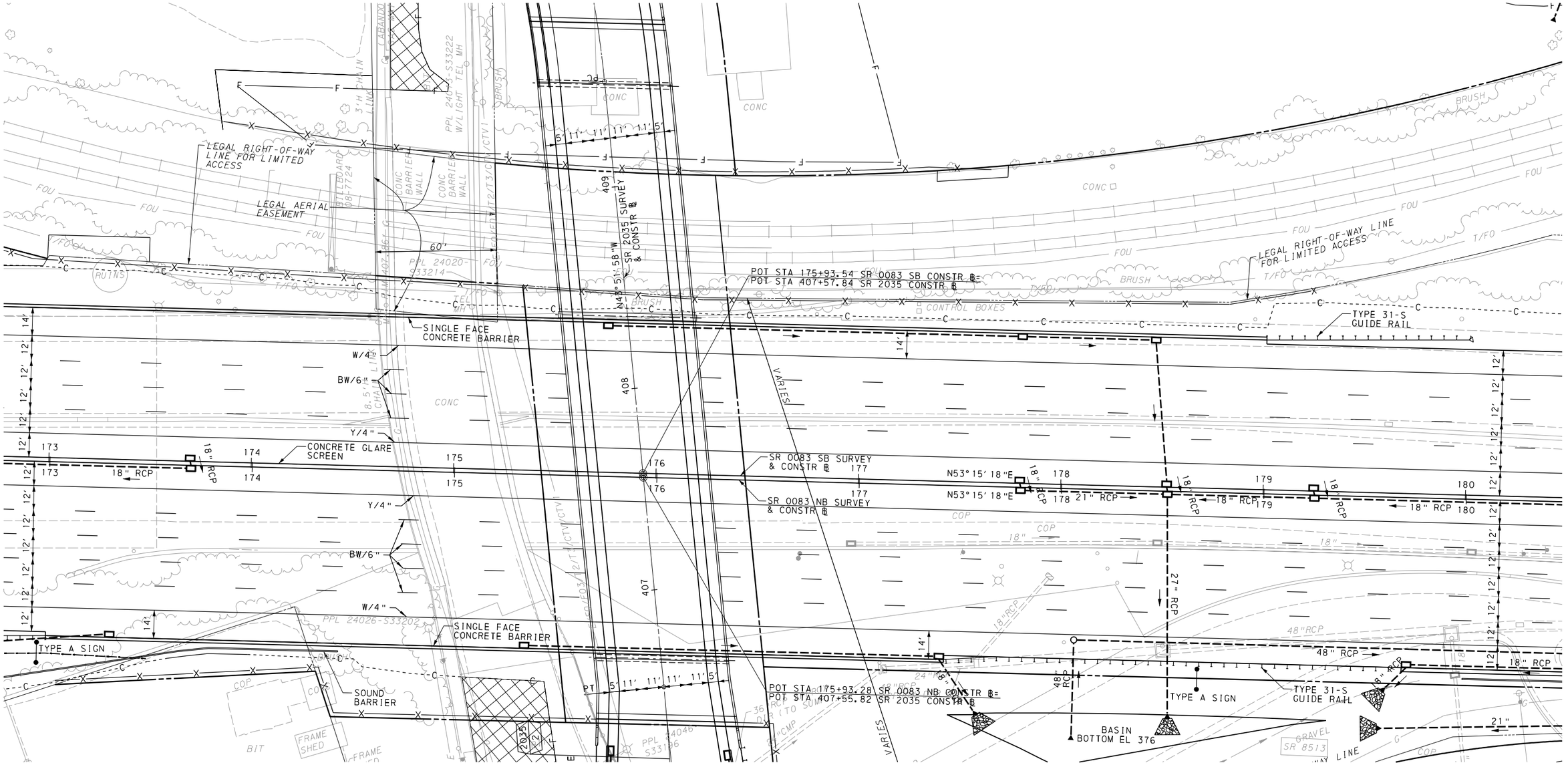


SEE SHEET 22 OF 103

SEE SHEET 24 OF 103

SCALE
0 25 50 FEET

| |
|---|
| FOR SR 2035 PROFILE, SEE SHEETS 83 & 84 |
| FOR SR 0083 (SB) PROFILE, SEE SHEET 63 |
| FOR SR 0083 (NB) PROFILE, SEE SHEET 49 |

SEE SHEET 40 OF 103

9/26/2023
FILENAME 43377MS-s-cv-pln03.dgn

SEE SHEET 38 OF 103

| DISTRICT | COUNTY | ROUTE | SECTION | SHEET |
|---|---|---|---|---|
| 8-0 | CUMBERLAND | 0083 | 094 | 24 OF 103 |
| LEMOYNE BOROUGH | | | | |

| REVISION NUMBER | REVISIONS | DATE | BY |
|---|---|---|---|
| | | | |
| | | | |

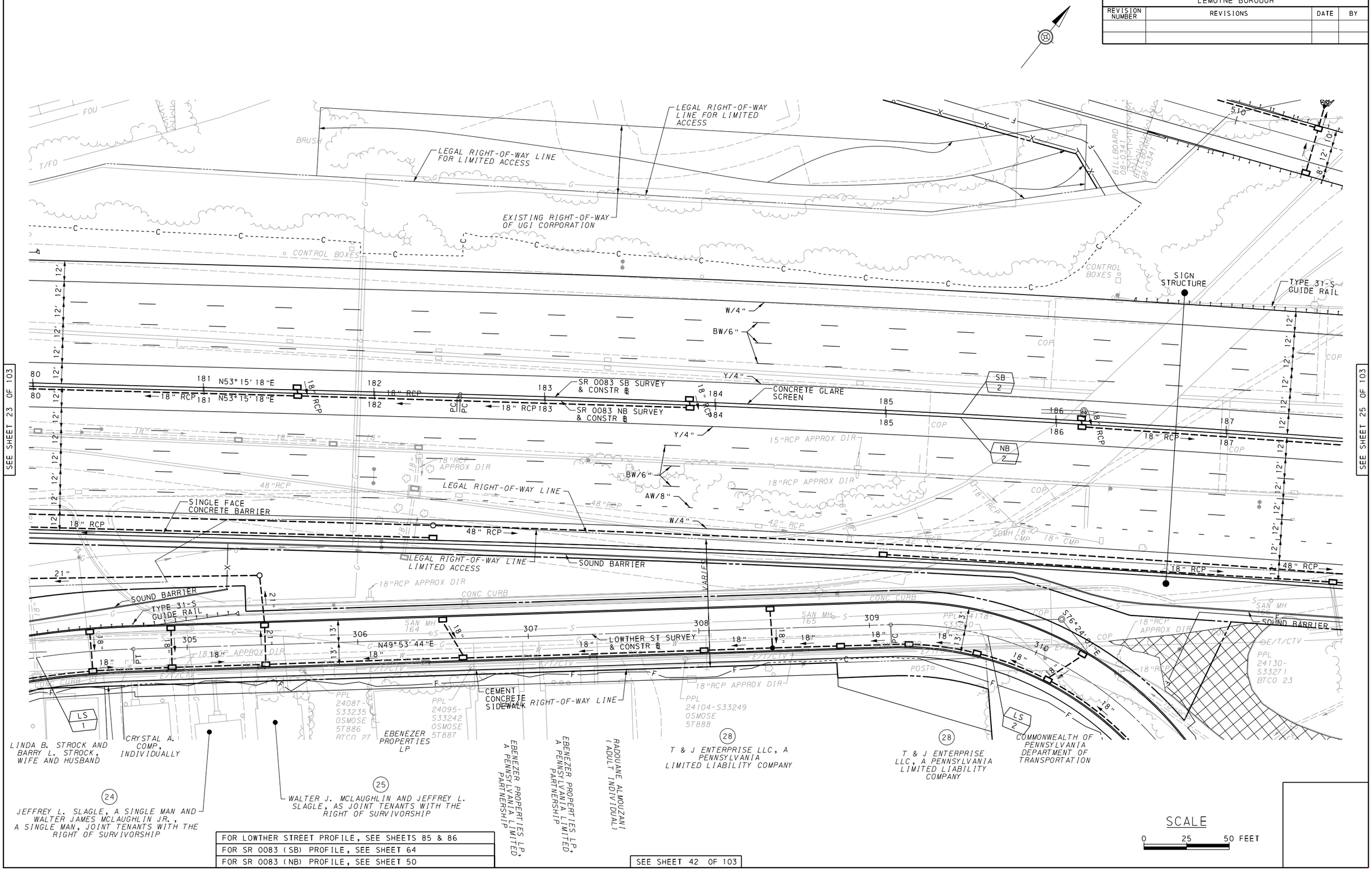


SEE SHEET 23 OF 103

SEE SHEET 25 OF 103

| |
|---|
| FOR LOWTHER STREET PROFILE, SEE SHEETS 85 & 86 |
| FOR SR 0083 (SB) PROFILE, SEE SHEET 64 |
| FOR SR 0083 (NB) PROFILE, SEE SHEET 50 |

SEE SHEET 42 OF 103

9/26/2023
FILENAME: 43377WS-s-cv-pln04.dgn

SEE SHEET 38 OF 103

| DISTRICT | COUNTY | ROUTE | SECTION | SHEET |
|---|---|---|---|---|
| 8-0 | CUMBERLAND | 0083 | 094 | 25 OF 103 |
| LEMOYNE BOROUGH | | | | |

| REVISION NUMBER | REVISIONS | DATE | BY |
|---|---|---|---|
| | | | |
| | | | |

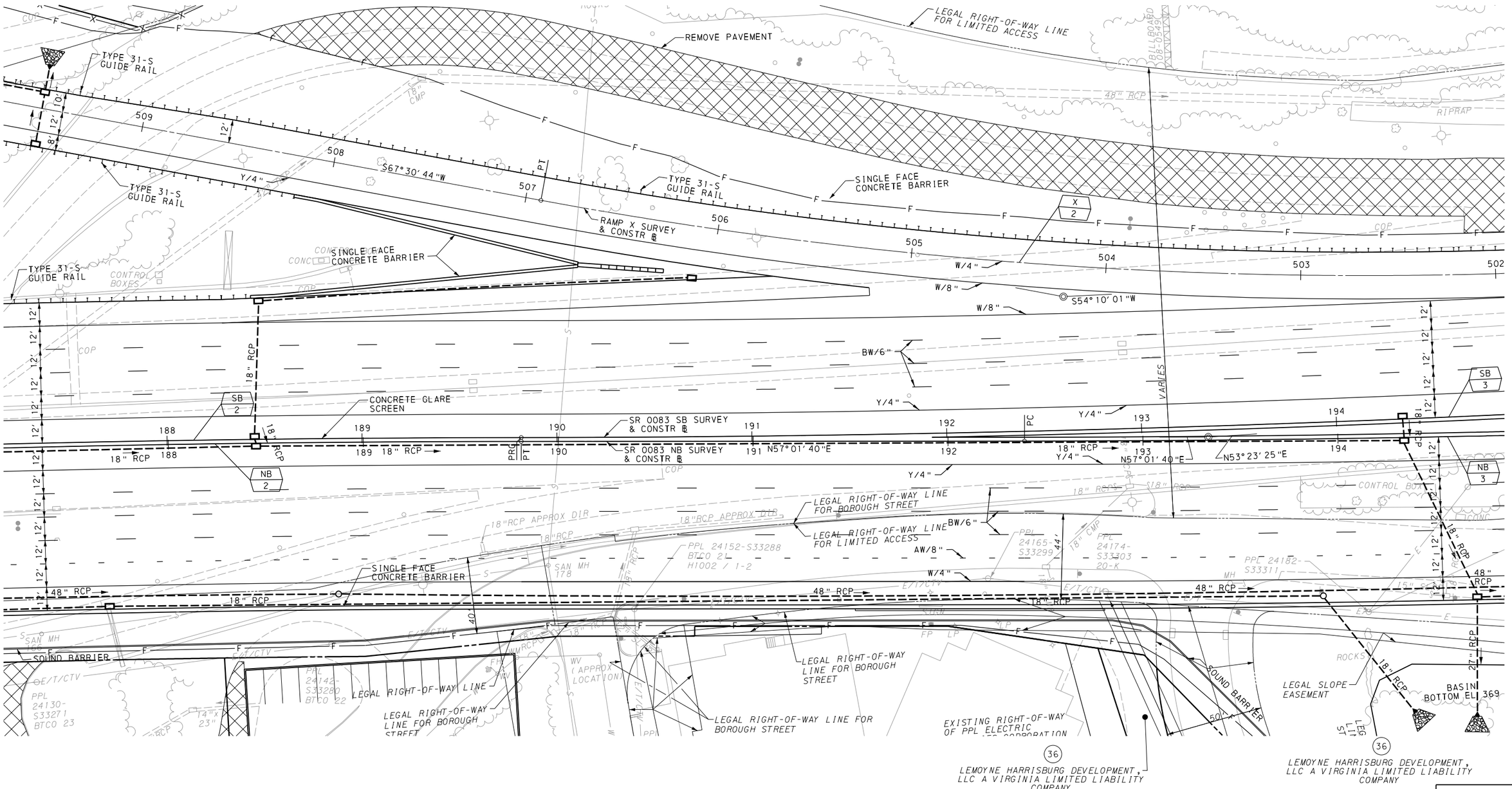


SEE SHEET 24 OF 103

SEE SHEET 26 OF 103

SCALE

0 25 50 FEET

| |
|---|
| FOR RAMP X PROFILE, SEE SHEETS 78 & 79 |
| FOR SR 0083 (SB) PROFILE, SEE SHEET 65 |
| FOR SR 0083 (NB) PROFILE, SEE SHEET 51 |

SEE SHEET 42 OF 103

9/26/2023
FILENAME: 43377WS-s-cv-pln05.dgn

| DISTRICT | COUNTY | ROUTE | SECTION | SHEET |
|---|---|---|---|---|
| 8-0 | * | 0083 | 094 | 26 OF 103 |

CITY OF HARRISBURG

| REVISION NUMBER | REVISIONS | DATE | BY |
|---|---|---|---|
| | | | |
| | | | |

* CUMBERLAND & DAUPHIN

PROPOSED STRUCTURE DATA:
STA: 13+80.49
TYPE: MULTI-SPAN MULTI-GIRDER BRIDGE
SPAN (CLEAR): VARIES
CLEARANCE: VARIES
CLEAR ROADWAY WIDTH: VARIES
SKEW: VARIES

LEGAL RIGHT-OF-WAY LINE FOR LIMITED ACCESS
STOP WORK STA 326+68.78 LOWTHER STREET
STOP WORK STA 326+35.00 LOWTHER STREET
RIPRAP
PC STA 500+00.00 RAMP X CONSTR ℄
PT STA 196+86.41 SR 0083 SB CONSTR ℄, 72.00' LT
POC STA 196+86.39 SR 0083 NB CONSTR ℄, 87.39' LT
SIGN STRUCTURE
TYPE 31-S GUIDE RAIL
LEGAL RIGHT-OF-WAY LINE FOR BOROUGH STREET
LOWTHER ST CONSTR ℄
LOWTHER ST SURVEY
LEGAL UNDERGROUND DRAIN PIPE EASEMENT
LEGAL AERIAL EASEMENT
LIMIT OF WORK
STA 200+19.75 (SB)
SEG 0421 OFFSET 0000
SR 0083 SEC 094
LEMOYNE BOROUGH
CUMBERLAND COUNTY
LIMIT OF WORK
STA 200+19.75 (NB)
SEG 0421 OFFSET 0000
SR 0083 SEC 094
CITY OF HARRISBURG
DAUPHIN COUNTY
SINGLE FACE CONCRETE BARRIER
RAMP X SURVEY & CONSTR ℄
S54°10'01"W
S53°23'25"W
N56°08'50"W
CEMENT CONCRETE SIDEWALK
POT STA 197+36.18 SR 0083 SB CONSTR ℄
POT STA 324+78.24 LOWTHER ST CONSTR ℄
SR 0083 SB SURVEY & CONSTR ℄
SR 0083 SB CONSTR ℄
N57°01'40"E
SR 0083 NB SURVEY & CONSTR ℄
POT STA 197+42.04 SR 0083 NB CONSTR ℄
POT STA 324+60.69 LOWTHER ST CONSTR ℄
N53°23'25"E
SR 0083 NB CONSTR ℄
LEGAL RIGHT-OF-WAY LINE FOR BOROUGH STREET
LEGAL RIGHT-OF-WAY LINE FOR LIMITED ACCESS
W/4"
AW/8"
BW/6"
Y/4"
SB 3
NB 3
18" RCP
21" RCP
24" RCP
48" RCP
BASIN BOTTOM EL 369
PPL 24204-S33323
TYPE 31-S GUIDE RAIL
LIMIT OF WORK
STA 200+17.04 (SB)
SEG 0420 OFFSET 0000
SR 0083 SEC 094
CITY OF HARRISBURG
DAUPHIN COUNTY
LIMIT OF WORK
STA 200+17.04 (NB)
SEG 0420 OFFSET 0000
SR 0083 SEC 094
LEMOYNE BOROUGH
CUMBERLAND COUNTY
REQUIRED RIGHT-OF-WAY LINE FOR LIMITED ACCESS

SEE SHEET 25 OF 103
SEE SHEET 27 OF 103

| |
|---|
| FOR LOWTHER STREET PROFILE, SEE SHEET 88 |
| FOR RAMP X PROFILE, SEE SHEET 78 |
| FOR SR 0083 (SB) PROFILE, SEE SHEETS 66 & 67 |
| FOR SR 0083 (NB) PROFILE, SEE SHEETS 52 & 53 |

SEE SHEET 43 OF 103

SCALE
0 25 50 FEET

9/26/2023
FILENAME= 4337#S-s-cv-pln06.dgn

| DISTRICT | COUNTY | ROUTE | SECTION | SHEET |
|---|---|---|---|---|
| 8-0 | DAUPHIN | 0083 | 094 | 27 OF 103 |
| CITY OF HARRISBURG | | | | |

| REVISION NUMBER | REVISIONS | DATE | BY |
|---|---|---|---|
| | | | |
| | | | |

*EXISTING STRUCTURE DATA:*
*STA: 13+80.49*
*TYPE: 21-SPAN STEEL DECK GIRDER BRIDGE*
*SPAN (CLEAR): VARIES*
*CLEARANCE: VARIES*
*CLEAR ROADWAY WIDTH: VARIES*

PROPOSED STRUCTURE DATA:
STA: 13+80.49
TYPE: MULTI-SPAN MULTI-GIRDER BRIDGE
SPAN (CLEAR): VARIES
CLEARANCE: VARIES
CLEAR ROADWAY WIDTH: VARIES
SKEW: VARIES

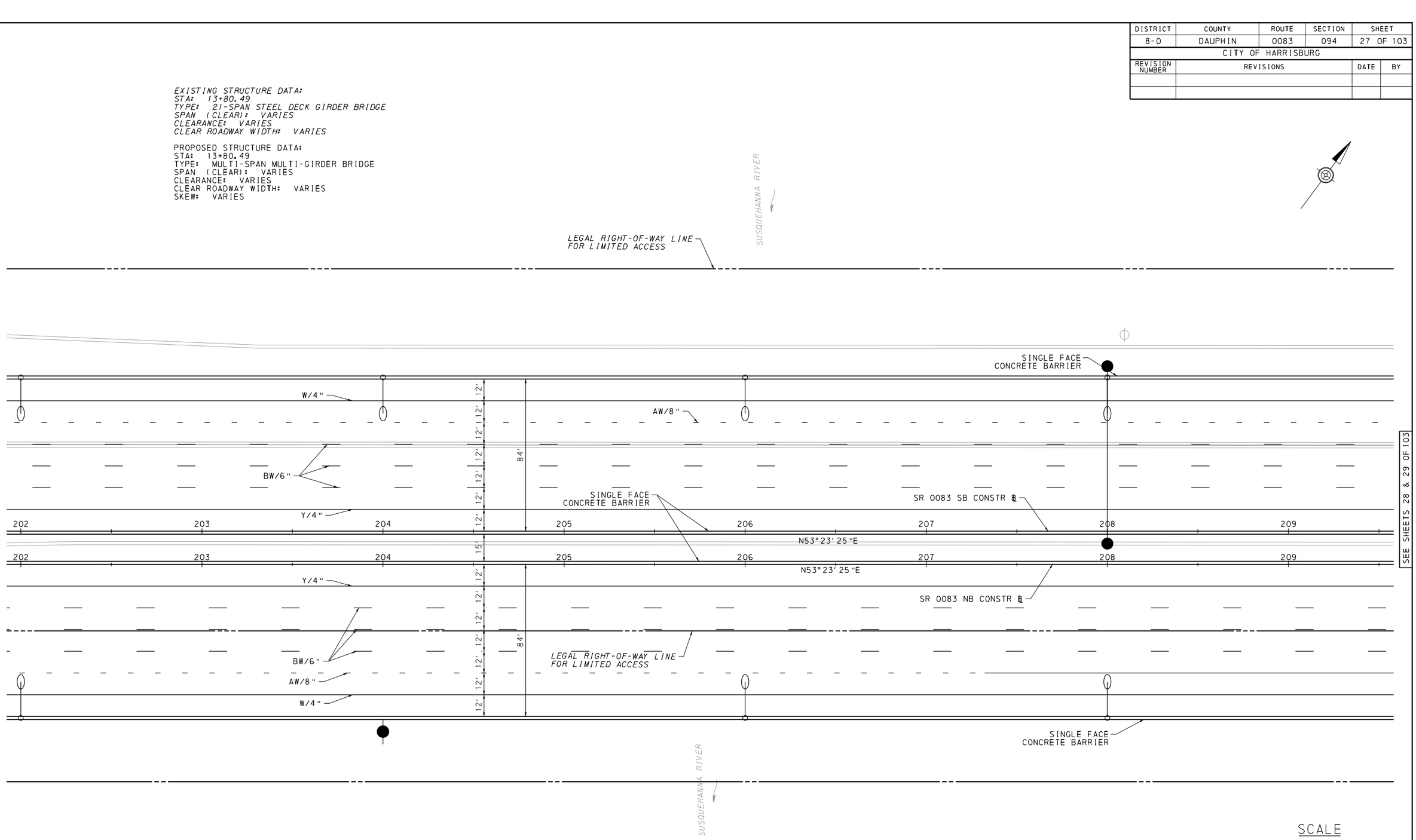


SCALE
0 25 50 FEET

SEE SHEET 26 OF 103
SEE SHEETS 28 & 29 OF 103

FOR SR 0083 (SB) PROFILE, SEE SHEET 68
FOR SR 0083 (NB) PROFILE, SEE SHEET 54

9/26/2023
FILENAME: 43377-s-cv-pln02.dgn

| DISTRICT | COUNTY | ROUTE | SECTION | SHEET |
|---|---|---|---|---|
| 8-0 | DAUPHIN | 0083 | 094 | 28 OF 103 |
| CITY OF HARRISBURG | | | | |

| REVISION NUMBER | REVISIONS | DATE | BY |
|---|---|---|---|
| | | | |
| | | | |

*EXISTING STRUCTURE DATA:*
*STA: 13+80.49*
*TYPE: 21-SPAN STEEL DECK GIRDER BRIDGE*
*SPAN (CLEAR): VARIES*
*CLEARANCE: VARIES*
*CLEAR ROADWAY WIDTH: VARIES*

PROPOSED STRUCTURE DATA:
STA: 13+80.49
TYPE: MULTI-SPAN MULTI-GIRDER BRIDGE
SPAN (CLEAR): VARIES
CLEARANCE: VARIES
CLEAR ROADWAY WIDTH: VARIES
SKEW: VARIES

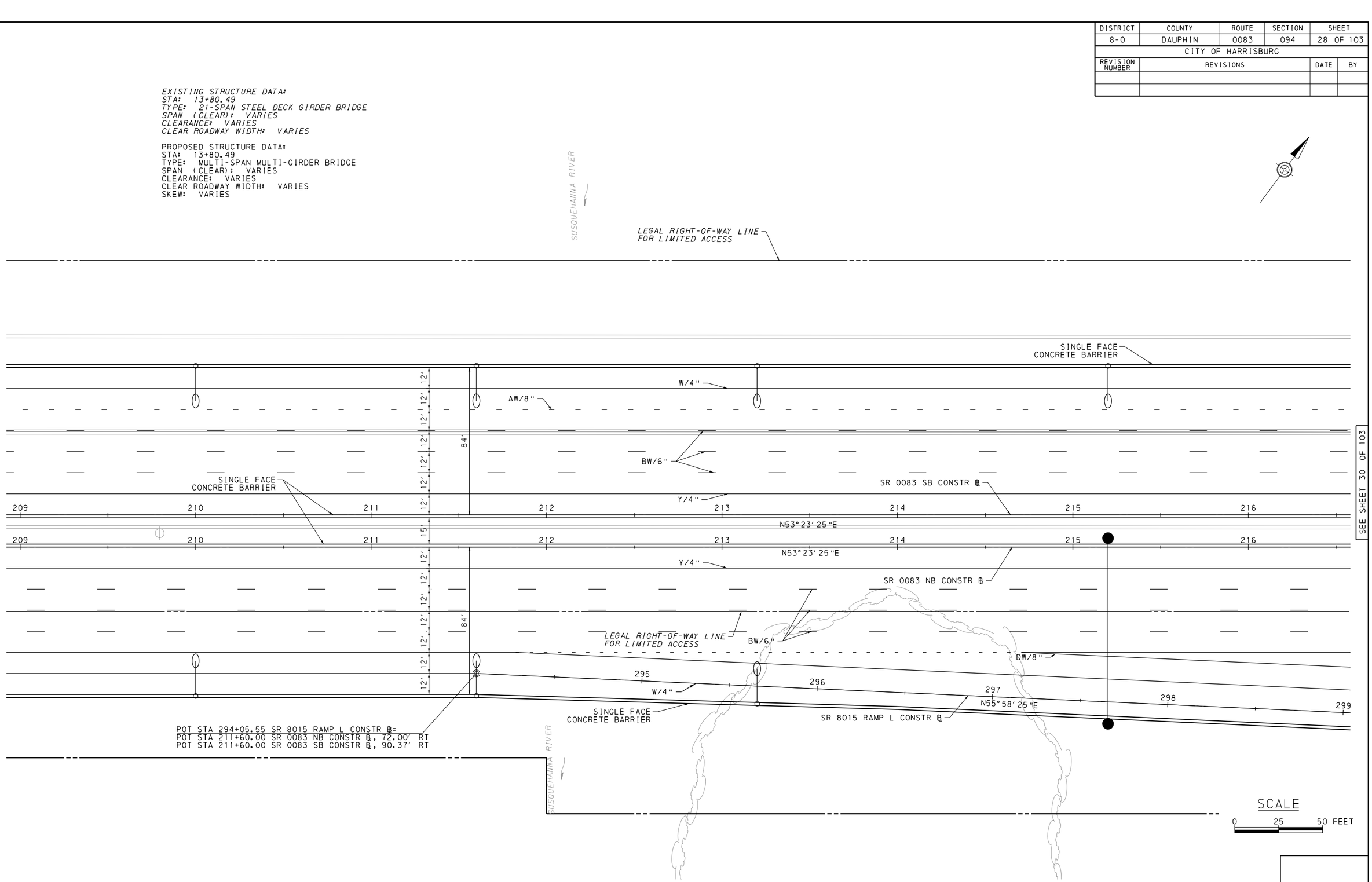


SEE SHEET 27 OF 103

SEE SHEET 30 OF 103

SCALE
0 25 50 FEET

| |
|---|
| FOR RAMP L PROFILE, SEE SHEET 92 |
| FOR SR 0083 (SB) PROFILE, SEE SHEET 69 |
| FOR SR 0083 (NB) PROFILE, SEE SHEET 55 |

STRUCTURE ALTERNATIVES #1 & #3

9/26/2023
FILENAME: 43377-s-cv-pln03.dgn

| DISTRICT | COUNTY | ROUTE | SECTION | SHEET |
|---|---|---|---|---|
| 8-0 | DAUPHIN | 0083 | 094 | 30 OF 103 |
| CITY OF HARRISBURG | | | | |

| REVISION NUMBER | REVISIONS | DATE | BY |
|---|---|---|---|
| | | | |
| | | | |

*EXISTING STRUCTURE DATA:*
*STA: 13+80.49*
*TYPE: 21-SPAN STEEL DECK GIRDER BRIDGE*
*SPAN (CLEAR): VARIES*
*CLEARANCE: VARIES*
*CLEAR ROADWAY WIDTH: VARIES*

PROPOSED STRUCTURE DATA:
STA: 13+80.49
TYPE: MULTI-SPAN MULTI-GIRDER BRIDGE
SPAN (CLEAR): VARIES
CLEARANCE: VARIES
CLEAR ROADWAY WIDTH: VARIES
SKEW: VARIES

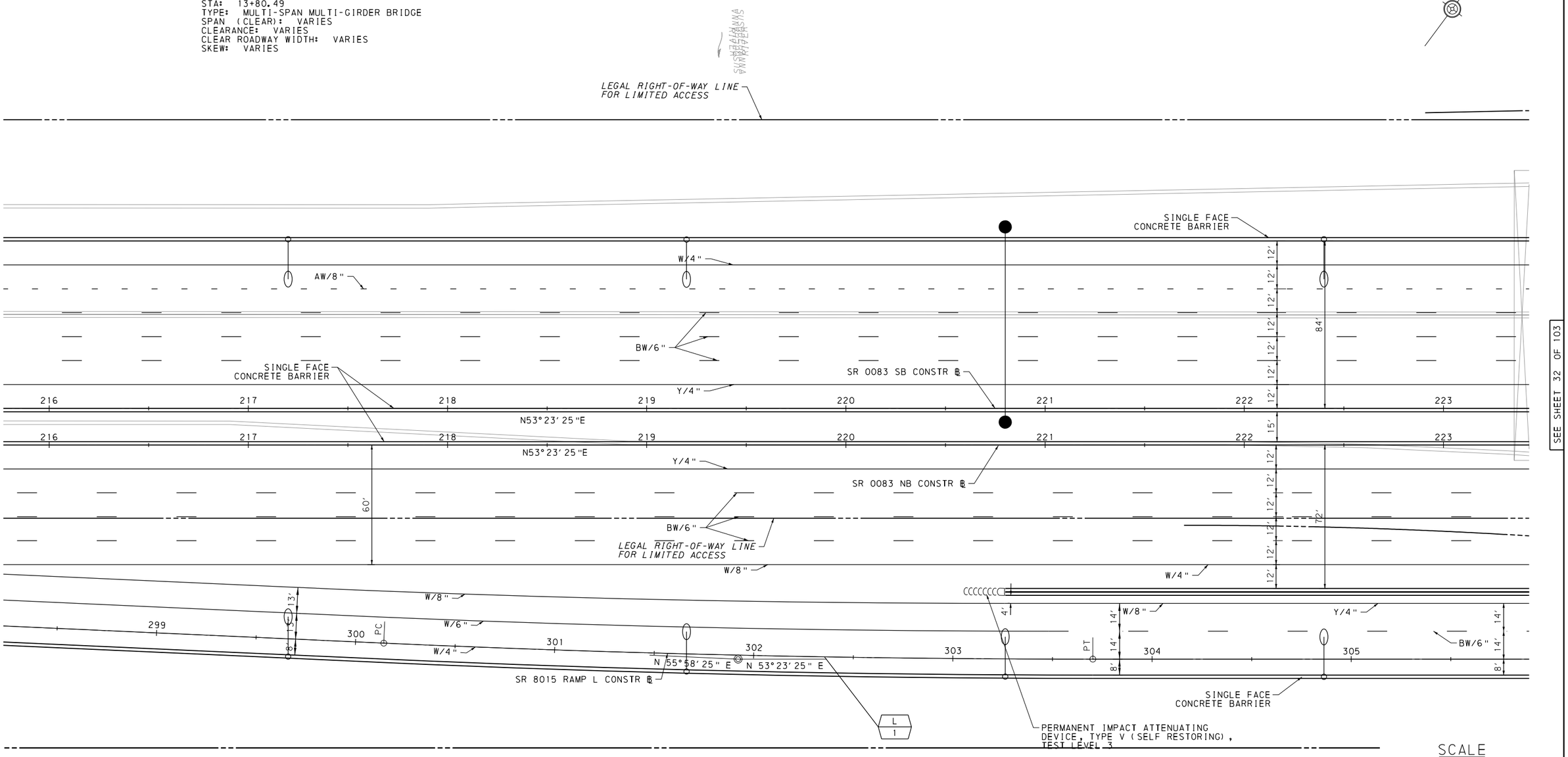


SCALE
0 25 50 FEET

| |
|---|
| FOR RAMP L PROFILE, SEE SHEETS 92 & 93 |
| FOR SR 0083 (SB) PROFILE, SEE SHEETS 69 & 70 |
| FOR SR 0083 (NB) PROFILE, SEE SHEETS 55 & 56 |

STRUCTURE ALTERNATIVES #1 & #3

9/26/2023
FILENAME: 43377-s-cv-pln04.dgn

SEE SHEET 44 OF 103

| DISTRICT | COUNTY | ROUTE | SECTION | SHEET |
|---|---|---|---|---|
| 8-0 | DAUPHIN | 0083 | 094 | 32 OF 103 |
| CITY OF HARRISBURG | | | | |

| REVISION NUMBER | REVISIONS | DATE | BY |
|---|---|---|---|
| | | | |
| | | | |

EXISTING STRUCTURE DATA:
STA: 13+80.49
TYPE: 21-SPAN STEEL DECK GIRDER BRIDGE
SPAN (CLEAR): VARIES
CLEARANCE: VARIES
CLEAR ROADWAY WIDTH: VARIES

PROPOSED STRUCTURE DATA:
STA: 13+80.49
TYPE: MULTI-SPAN MULTI-GIRDER BRIDGE
SPAN (CLEAR): VARIES
CLEARANCE: VARIES
CLEAR ROADWAY WIDTH: VARIES
SKEW: VARIES

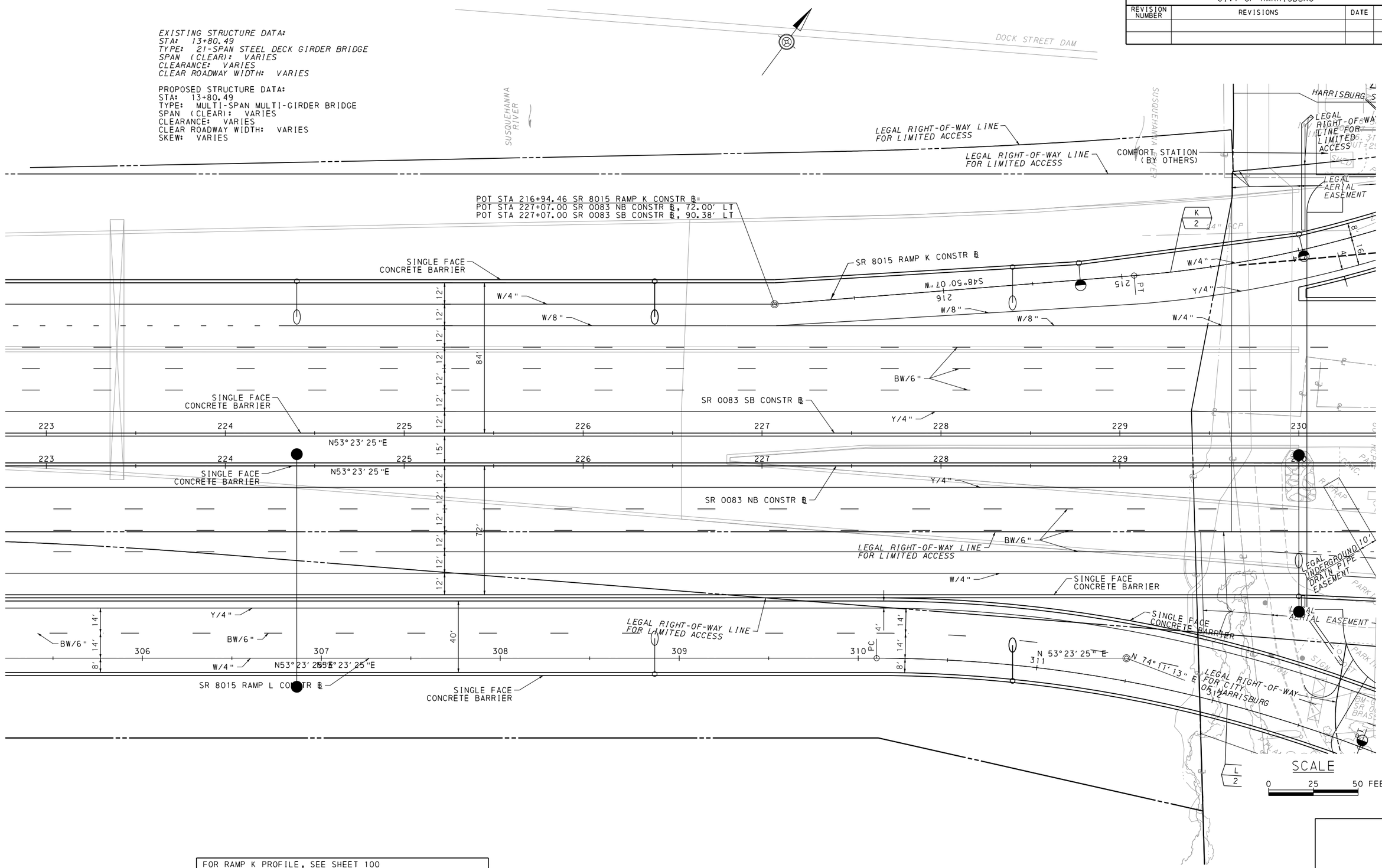


SEE SHEETS 29 & 30 OF 103

SEE SHEET 33 OF 103

| |
|---|
| FOR RAMP K PROFILE, SEE SHEET 100 |
| FOR RAMP L PROFILE, SEE SHEETS 93 & 94 |
| FOR SR 0083 (SB) PROFILE, SEE SHEETS 70 & 71 |
| FOR SR 0083 (NB) PROFILE, SEE SHEETS 56 & 57 |

9/26/2023
FILENAME: 43377-s-cv-pln05.dgn

| DISTRICT | COUNTY | ROUTE | SECTION | SHEET |
|---|---|---|---|---|
| 8-0 | DAUPHIN | 0083 | 094 | 33 OF 103 |
| CITY OF HARRISBURG | | | | |

| REVISION NUMBER | REVISIONS | DATE | BY |
|---|---|---|---|
| | | | |
| | | | |

SEE SHEET 44 OF 103

SEE SHEET 32 OF 103

SEE SHEET 34 OF 103

COMFORT STATION (BY OTHERS)

LEGAL RIGHT-OF-WAY LINE FOR LIMITED ACCESS

LEGAL AERIAL EASEMENT

LEGAL RIGHT-OF-WAY LINE FOR CITY STREET

LEGAL RIGHT-OF-WAY LINE FOR LIMITED ACCESS

POC STA 212+56.02 SR 8015 RAMP K CONSTR ℄=
POC STA 509+37.96 SR 8015 RAMP M CONSTR ℄

POT STA 231+35.41 SR 0083 SR CONSTR ℄=
POC STA 510+87.84 SR 8015 RAMP M CONSTR ℄

POT STA 231+39.47 SR 0083 NB CONSTR ℄=CONCRETE BARRIER
POC STA 511+06.66 SR 8015 RAMP M CONSTR ℄

SINGLE FACE CONCRETE BARRIER

SR 0083 SB CONSTR ℄

SR 0083 NB CONSTR ℄

BASIN BOTTOM EL 304

POC STA 235+91.36 SR 0083 SB CONSTR ℄=
POT STA 320+23.17 SR 8015 RAMP L CONSTR ℄

POC STA 235+89.31 SR 0083 NB CONSTR ℄=
POT STA 320+04.74 SR 8015 RAMP L CONSTR ℄

POC STA 318+49.90 SR 8015 RAMP L CONSTR ℄=
POC STA 516+21.26 SR 8015 RAMP M CONSTR ℄

PERMANENT IMPACT ATTENUATING DEVICE, TYPE V (SELF RESTORING), TEST LEVEL 3

LEGAL UNDERGROUND 10' DRAIN PIPE EASEMENT

FRONT STREET PARKING LOT ENTRANCE/EXIT (GREENBELT TRAIL)

LEGAL RIGHT-OF-WAY FOR CITY OF HARRISBURG

SR 8015 RAMP L CONSTR ℄

SR 8015 RAMP M CONSTR ℄

NB C-D ROAD (SR 9402)

EXISTING STRUCTURE DATA:
STA: 29+75.9
TYPE: 21-SPAN STEEL I-BM & MULTI-GIRDER BRIDGE
SPAN (CLEAR): VARIES
CLEARANCE: VARIES
CLEAR ROADWAY WIDTH: VARIES

SCALE
0 25 50 FEET

| |
|---|
| FOR RAMP K PROFILE, SEE SHEET 103 |
| FOR RAMP L PROFILE, SEE SHEETS 94 & 95 |
| FOR RAMP M PROFILE, SEE SHEETS 90 & 91 |
| FOR SR 0083 (SB) PROFILE, SEE SHEETS 71 & 72 |
| FOR SR 0083 (NB) PROFILE, SEE SHEETS 57 & 58 |

9/26/2023
FILENAME= 43377-s-cv-pln06.dgn

SEE SHEET 44 OF 103

| DISTRICT | COUNTY | ROUTE | SECTION | SHEET |
|---|---|---|---|---|
| 8-0 | DAUPHIN | 0083 | 094 | 34 OF 103 |
| CITY OF HARRISBURG | | | | |

| REVISION NUMBER | REVISIONS | DATE | BY |
|---|---|---|---|
| | | | |
| | | | |

SPAN (CLEAR): VARIES
CLEARANCE: VARIES
CLEAR ROADWAY WIDTH: VARIES

PROPOSED STRUCTURE DATA:
STA: 29+75.91
TYPE: MULTI-SPAN MULTI-GIRDER BRIDGE
SPAN (CLEAR): VARIES
CLEARANCE: VARIES
CLEAR ROADWAY WIDTH: VARIES
SKEW: VARIES

PERMANENT IMPACT ATTENUATING DEVICE, TYPE V (SELF RESTORING), TEST LEVEL 3

LEGAL RIGHT-OF-WAY LINE FOR LIMITED ACCESS

LEGAL AERIAL EASEMENT

REQUIRED AERIAL EASEMENT

SINGLE FACE CONCRETE BARRIER

POC STA 399+70.38 SR 8015 RAMP N CONSTR ℄
POC STA 241+23.40 SR 0083 NB CONSTR ℄, 101.69' LT
POC STA 241+24.13 SR 0083 SB CONSTR ℄, 90.13' LT

RAILROAD RIGHT-OF-WAY LINE

LEGAL RIGHT-OF-WAY LINE FOR CITY STREET

PAXTON CREEK

LEGAL AERIAL EASEMENT

LEGAL RIGHT-OF-WAY LINE FOR LIMITED ACCESS

SB C-D ROAD (SR 9403)

N 53°23'25" E

N 65°03'59" E

LEGAL UNDERGROUND DRAIN PIPE EASEMENT

SR 0083 SB CONSTR ℄

SR 0083 NB CONSTR ℄

NORFOLK SOUTHERN RAILWAY CO.

POT STA 518+39.72 SR 8015 RAMP M CONSTR ℄=
POC STA 237+63.02 SR 0083 NB CONSTR ℄, 101.73' RT
POC STA 237+63.92 SR 0083 SB CONSTR ℄, 119.53' RT

SR 8015 RAMP M CONSTR ℄

LEGAL RIGHT-OF-WAY LINE FOR LIMITED ACCESS

NB C-D ROAD (SR 9402)

LEGAL UNDERGROUND DRAIN PIPE EASEMENT

LEGAL AERIAL EASEMENT

LEGAL DRAINAGE

48" CAST IRON

DENSE WOODS

DENSE VEGETATION

PARKING

TANKS

HOPPER

SCALE
0 25 50 FEET

SEE SHEET 33 OF 103

SEE SHEET 35 OF 103

| |
|---|
| FOR RAMP N PROFILE, SEE SHEET 97 |
| FOR RAMP M PROFILE, SEE SHEET 91 |
| FOR SR 0083 (SB) PROFILE, SEE SHEETS 72 & 73 |
| FOR SR 0083 (NB) PROFILE, SEE SHEETS 58 & 59 |

9/26/2023
FILENAME 43377-s-cv-pln07.dgn

| DISTRICT | COUNTY | ROUTE | SECTION | SHEET |
|---|---|---|---|---|
| 8-0 | DAUPHIN | 0083 | 094 | 35 OF 103 |
| CITY OF HARRISBURG | | | | |

| REVISION NUMBER | REVISIONS | DATE | BY |
|---|---|---|---|
| | | | |
| | | | |

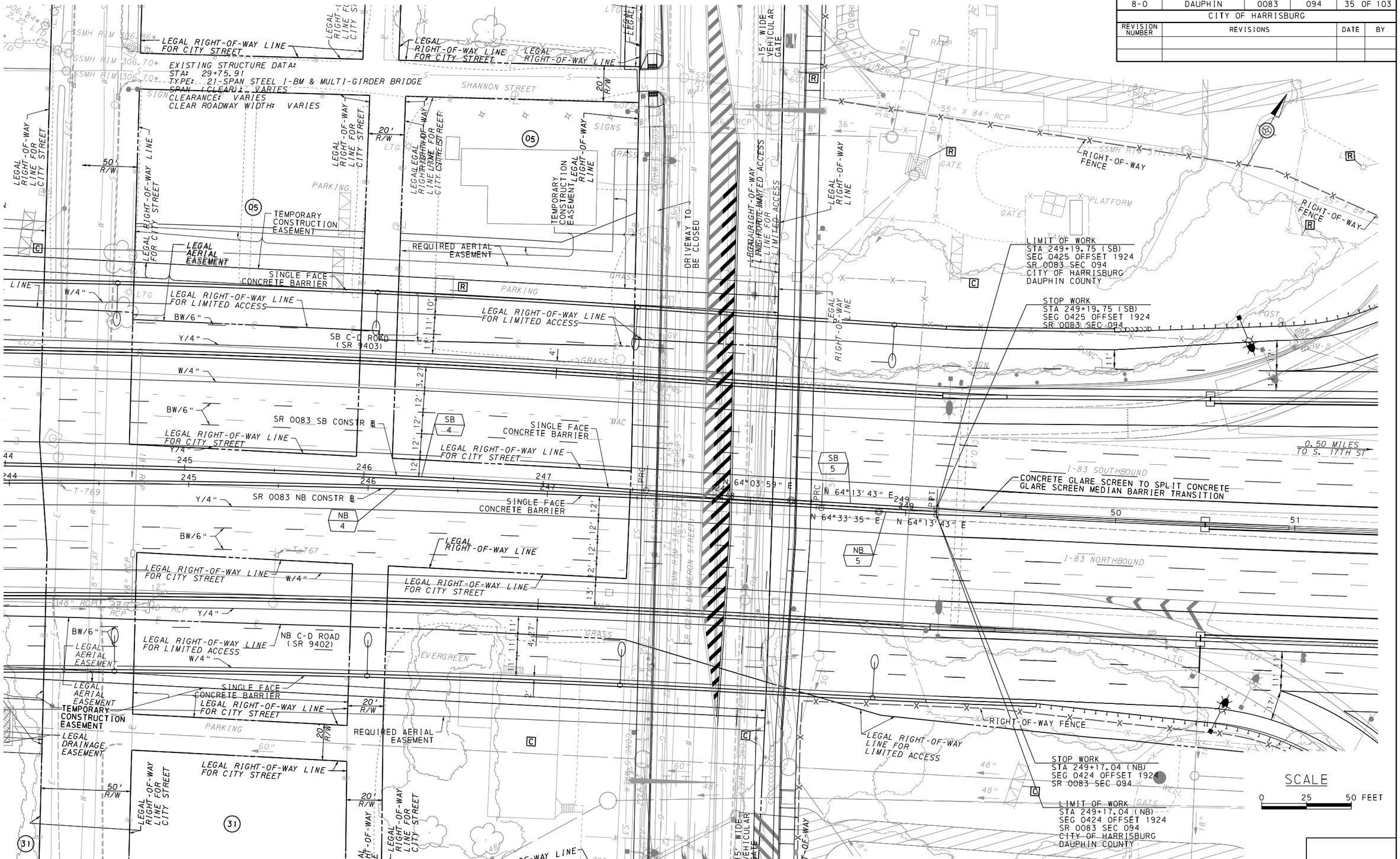


SEE SHEET 34 OF 103

FOR SR 0083 (SB) PROFILE, SEE SHEETS 73 & 74

FOR SR 0083 (NB) PROFILE, SEE SHEETS 59 & 60

9/26/2023
FILENAME: 43377-s-cv-pln08.dgn

SEE SHEET 37 OF 103

| DISTRICT | COUNTY | ROUTE | SECTION | SHEET |
|---|---|---|---|---|
| 8-0 | CUMBERLAND | 0083 | 094 | 36 OF 103 |
| LEMOYNE BOROUGH | | | | |

| REVISION NUMBER | REVISIONS | DATE | BY |
|---|---|---|---|
| | | | |
| | | | |

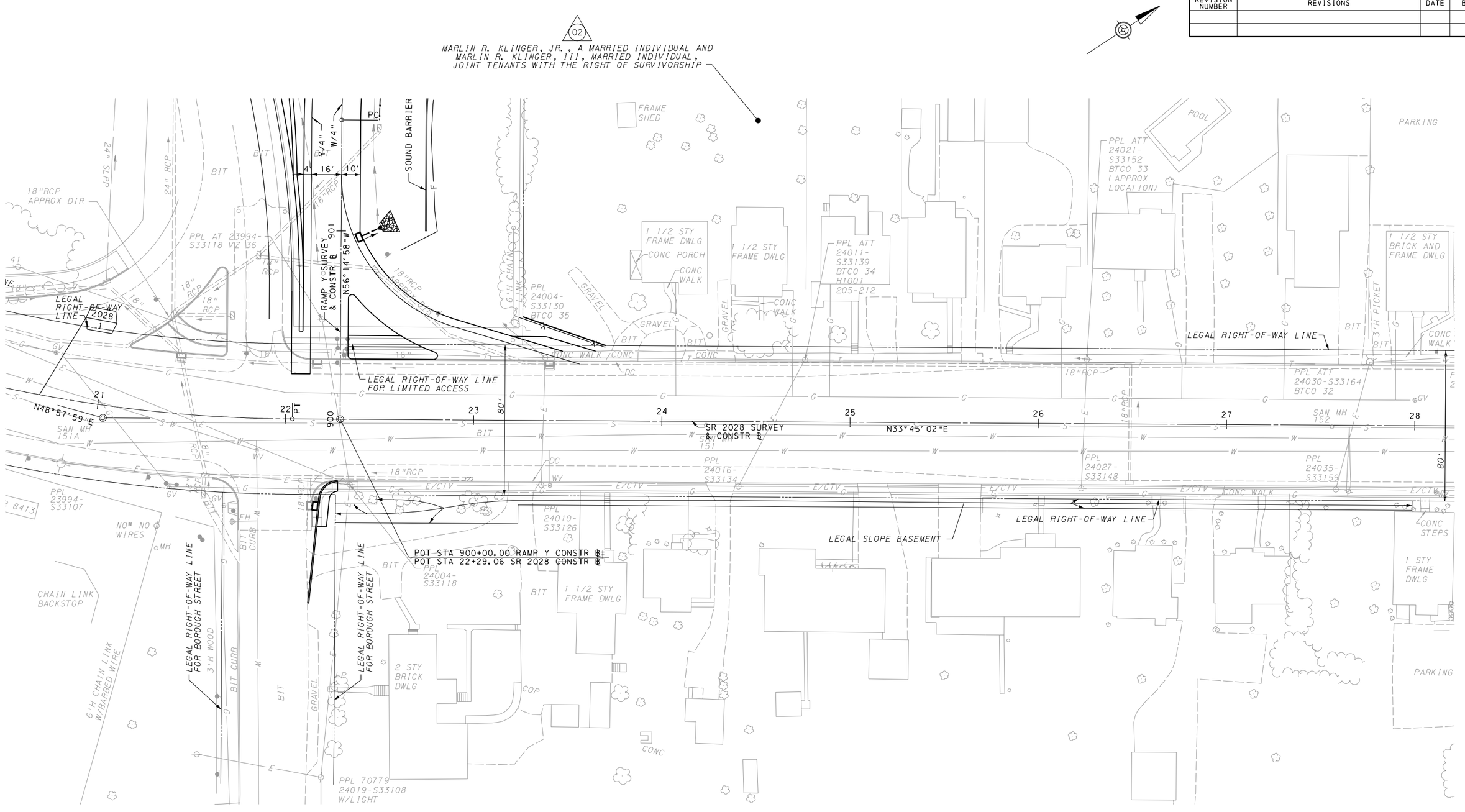


SEE SHEET 40 OF 103

FOR SR 2028 PROFILE, SEE SHEETS 81 & 82
FOR RAMP Y PROFILE, SEE SHEET 76

SCALE
0 25 50 FEET

9/26/2023
FILENAME: 43377WS-s-cv-pln07.dgn

SEE SHEET 22 OF 103

| DISTRICT | COUNTY | ROUTE | SECTION | SHEET |
|---|---|---|---|---|
| 8-0 | CUMBERLAND | 0083 | 094 | 37 OF 103 |
| LEMOYNE BOROUGH | | | | |

| REVISION NUMBER | REVISIONS | DATE | BY |
|---|---|---|---|
| | | | |
| | | | |

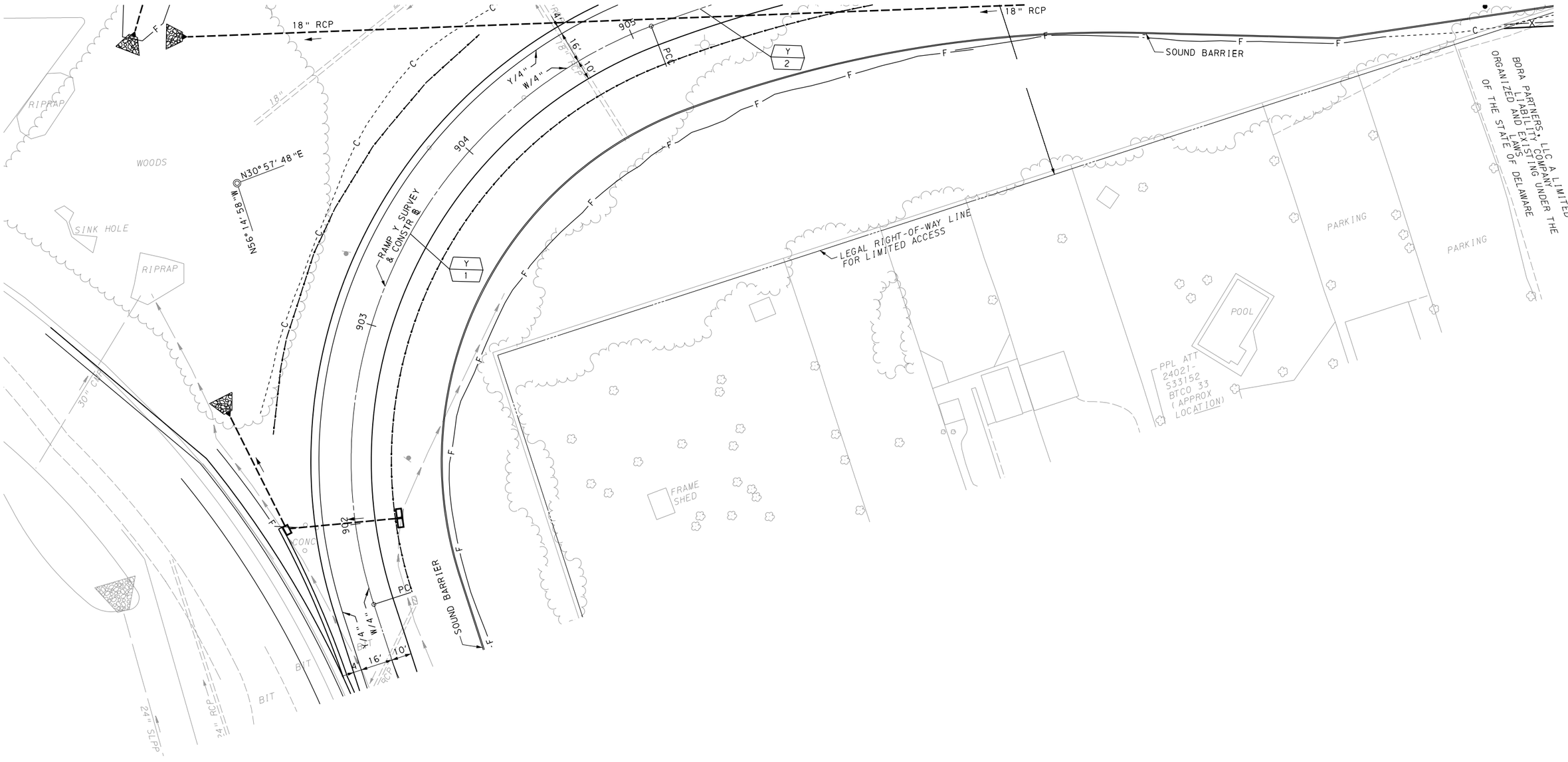


SCALE

0 25 50 FEET

FOR RAMP Y PROFILE, SEE SHEET 76

SEE SHEET 36 OF 103

9/26/2023
FILENAME= 43377WS-s-cv-pln08.dgn

| DISTRICT | COUNTY | ROUTE | SECTION | SHEET |
|---|---|---|---|---|
| 8-0 | CUMBERLAND | 0083 | 094 | 38 OF 103 |
| LEMOYNE BOROUGH | | | | |

| REVISION NUMBER | REVISIONS | DATE | BY |
|---|---|---|---|
| | | | |
| | | | |

SEE SHEET 39 OF 103

SEE SHEET 25 OF 103

TYPE 31-S GUIDE RAIL

TYPE 31-S GUIDE RAIL

TYPE 31-S GUIDE RAIL

TYPE 31-S GUIDE RAIL

516

515

514

513

512

511

510

509

PC

4' 12' 10"

8' 12' 10"

12'

W/4"

Y/4"

S67° 30' 44"W

RAMP X SURVEY & CONSTR ℄

PARKING

LEGAL RIGHT-OF-WAY LINE FOR LIMITED ACCESS

LEGAL RIGHT-OF-WAY LINE FOR LIMITED ACCESS

LEGAL RIGHT-OF-WAY LINE FOR LIMITED ACCESS

BILLBOARD 08-0341

BILLBOARD 08-0341

F

FOU

FO

COP

G

BRUSH

SCALE

0 25 50 FEET

FOR RAMP X PROFILE, SEE SHEETS 79 & 80

SEE SHEET 20 OF 103

9/26/2023
FILENAME= 43377#S-s-cv-pln09.dgn

| DISTRICT | COUNTY | ROUTE | SECTION | SHEET |
|---|---|---|---|---|
| 8-0 | CUMBERLAND | 0083 | 094 | 39 OF 103 |
| LEMOYNE BOROUGH | | | | |

| REVISION NUMBER | REVISIONS | DATE | BY |
|---|---|---|---|
| | | | |
| | | | |

SEE SHEET 41 OF 103

SEE SHEET 38 OF 103

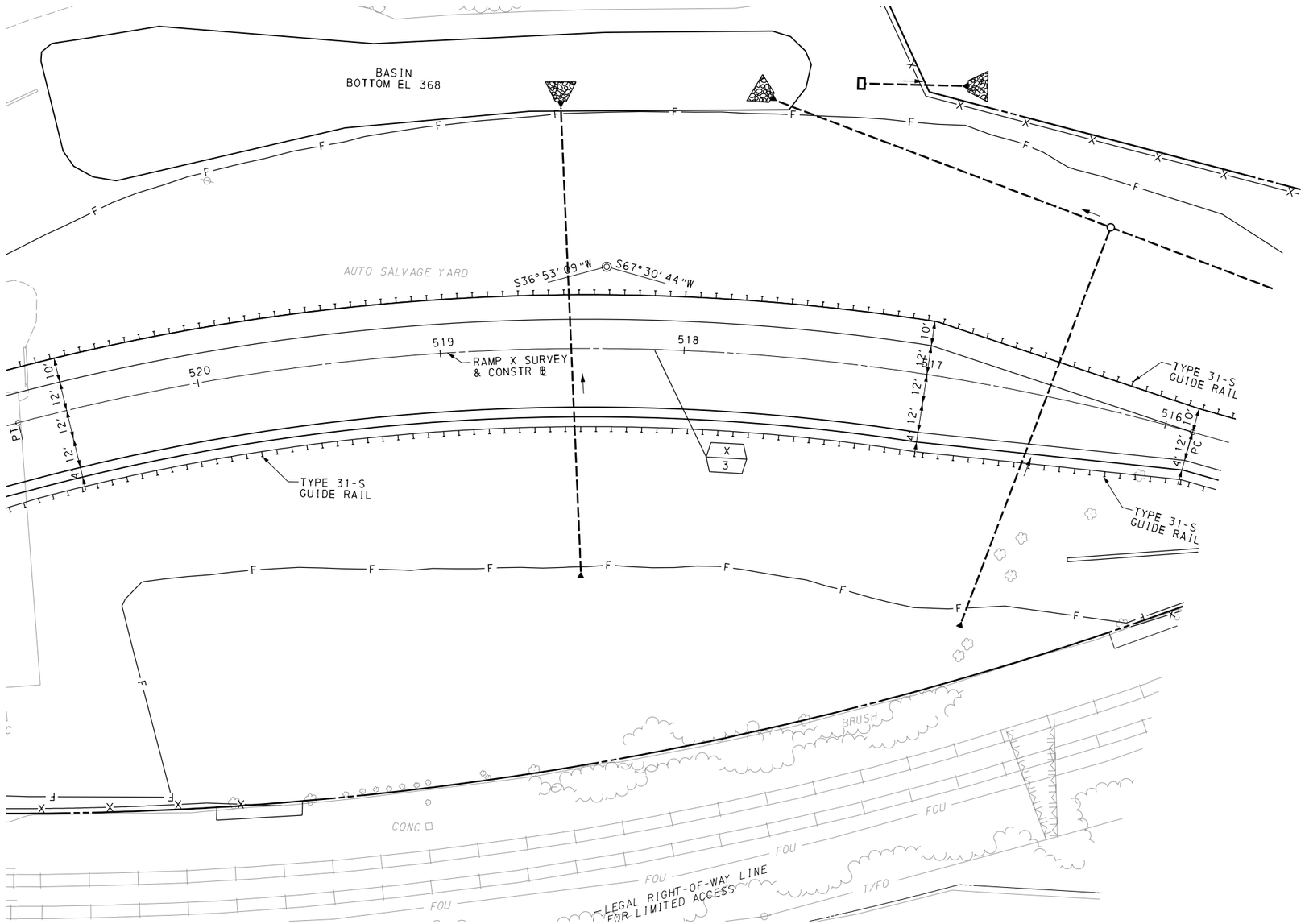


FOR RAMP X PROFILE, SEE SHEET 80

SEE SHEET 23 OF 103

SCALE

0 25 50 FEET

9/26/2023
FILENAME: 43377MS-s-cv-pln10.dgn

SEE SHEET 23 OF 103

| DISTRICT | COUNTY | ROUTE | SECTION | SHEET |
|---|---|---|---|---|
| 8-0 | CUMBERLAND | 0083 | 094 | 40 OF 103 |
| LEMOYNE BOROUGH | | | | |

| REVISION NUMBER | REVISIONS | DATE | BY |
|---|---|---|---|
| | | | |
| | | | |

SEE SHEET 36 OF 103

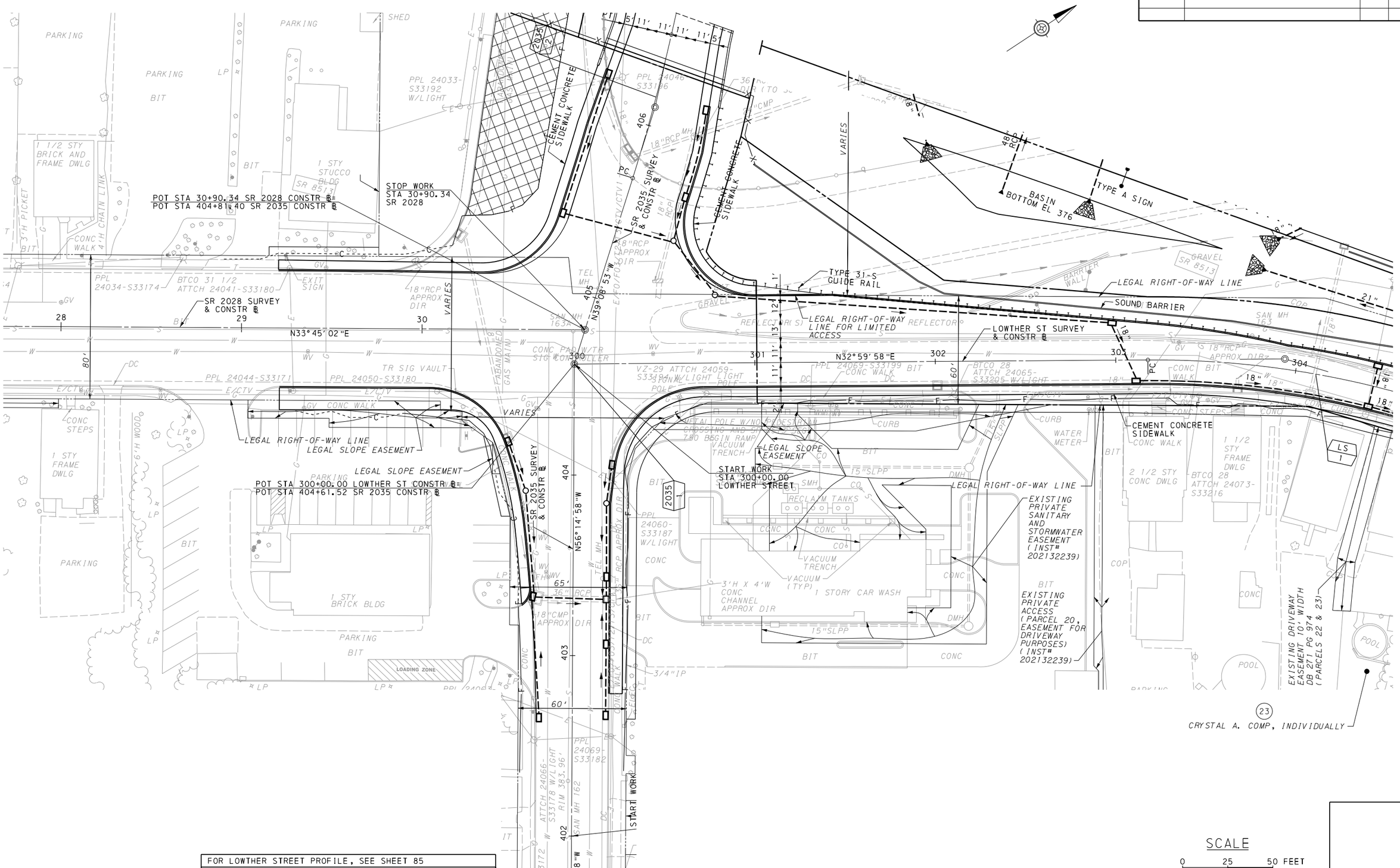


SEE SHEET 24 OF 103

SCALE

0 25 50 FEET

| |
|---|
| FOR LOWTHER STREET PROFILE, SEE SHEET 85 |
| FOR SR 2035 PROFILE, SEE SHEET 83 |
| FOR SR 2028 PROFILE, SEE SHEET 82 |

SEE SHEET OF

9/26/2023
FILENAME: 43377WS-s-cv-pln11.dgn

| DISTRICT | COUNTY | ROUTE | SECTION | SHEET |
|---|---|---|---|---|
| 8-0 | CUMBERLAND | 0083 | 094 | 41 OF 103 |
| LEMOYNE BOROUGH | | | | |

| REVISION NUMBER | REVISIONS | DATE | BY |
|---|---|---|---|
| | | | |
| | | | |

SEE SHEET 23 OF 103

POT STA 521+77.72 RAMP X CONSTR ℄=
POC STA 410+41.11 SR 2035 CONSTR ℄

LEGAL RIGHT-WAY LINE

CEMENT CONCRETE SIDEWALK

TYPE 31-S GUIDE RAIL

STOP WORK
STA 414+30.00
SR 2035

SR 2035 SURVEY & CONSTR ℄

N39°25'46"W

N63°53'45"W

S33°53'09"W

LEGAL RIGHT-OF-WAY LINE

LEGAL RIGHT-WAY LINE FOR BOROUGH STREET

PARKING

GRAVEL

CONC WALK

CONC CURB

CONC STEPS

WOODEN POST

FRAME SHED

BOLLARD

BOLLARD BTCO 3 ATTCH 23983-S33248

PPL 84 573 306 W/LIGHT AND ELEC METER

PPL 84 573 307 W/ELEC METER

PPL 92335
PPL 23984-S33241 W/LIGHT

PPL 24004-S33233 W/LIGHT

PPL 24010-S33226 W/LIGHT

PPL 23991-S33249

PPL 23997-S33242 W/LIGHT

PPL 23988-S33253 W/LIGHT

PPL 23985-S33258 W/LIGHT

6'H CHAIN LINK

CHAIN LINK

ABANDONED GAS MAIN

SAN MH 130A

SAN MH 138C

TEL MH

1 STY METAL BLDG

1 STY CONC BLOCK BLDG

PLANTER

COP

RETAINING WALL

RAMP

DEPRESSED CURB

BIT

CONC

F

W

G

S

TEL

E/F07F03/T2/T3/CTV/CTV1

E/F07F02/T2/T3/CTV/CTV1

2035 3

2035 4

410 411 412 413 414 415 416 417

521

PT

PC

15'

60'

12' 12' 12' 10'

FOR SR 2035 PROFILE, SEE SHEET 84
FOR RAMP X PROFILE, SEE SHEET 80

SEE SHEET 39 OF 103

SCALE
0 25 50 FEET

9/26/2023
FILENAME: 43377WS-s-cv-pln12.dgn

SEE SHEET 20 OF 103

| DISTRICT | COUNTY | ROUTE | SECTION | SHEET |
|---|---|---|---|---|
| 8-0 | CUMBERLAND | 0083 | 094 | 42 OF 103 |
| LEMOYNE BOROUGH | | | | |

| REVISION NUMBER | REVISIONS | DATE | BY |
|---|---|---|---|
| | | | |
| | | | |

SEE SHEET 24 OF 103

SEE SHEET 43 OF 103

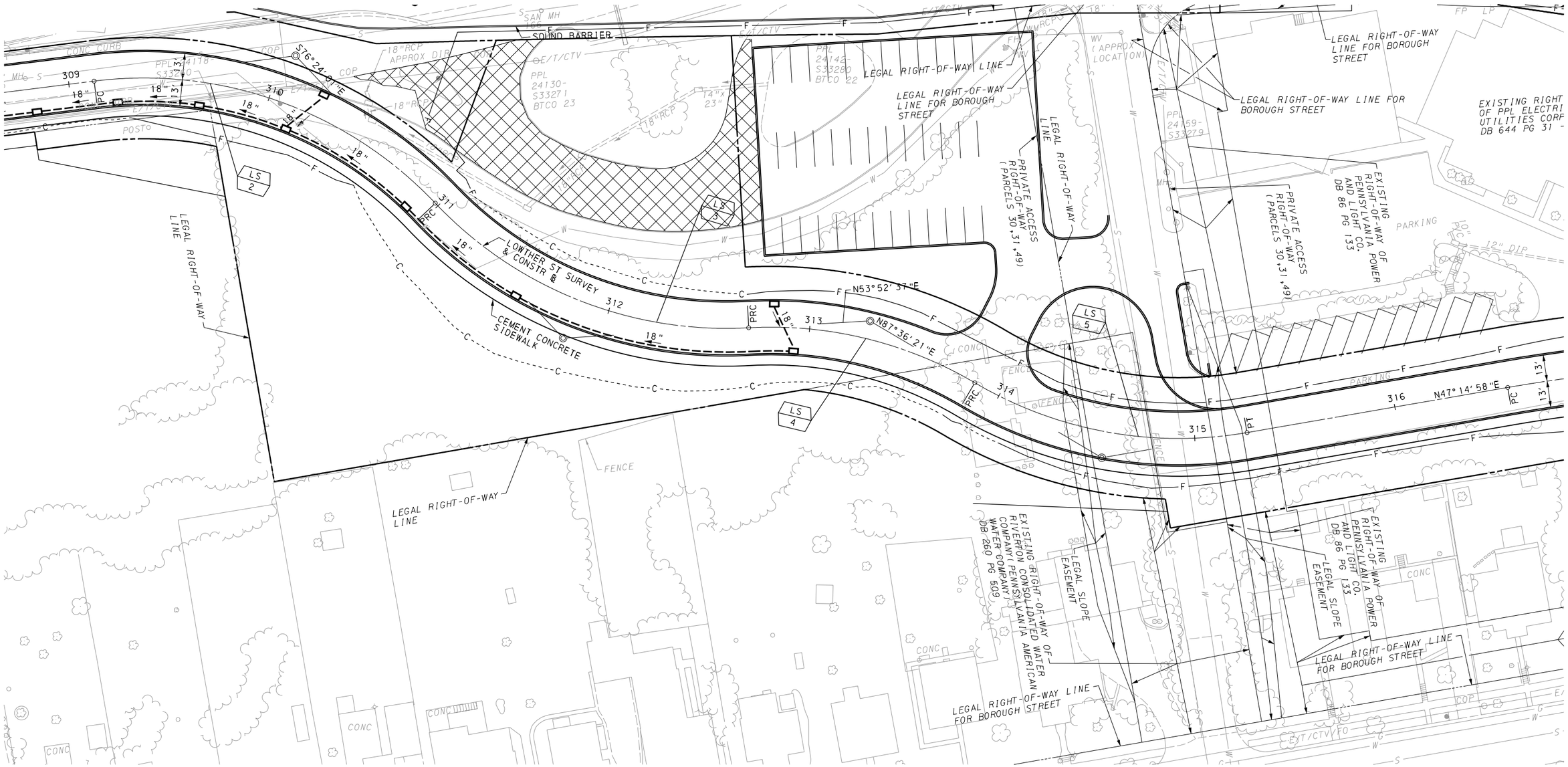


SCALE

0 25 50 FEET

FOR LOWTHER STREET PROFILE, SEE SHEETS 86 & 87

9/26/2023
FILENAME: 43377MS-s-cv-pln13.dgn

SEE SHEET 26 OF 103

| DISTRICT | COUNTY | ROUTE | SECTION | SHEET |
|---|---|---|---|---|
| 8-0 | CUMBERLAND | 0083 | 094 | 43 OF 103 |
| LEMOYNE BOROUGH | | | | |

| REVISION NUMBER | REVISIONS | DATE | BY |
|---|---|---|---|
| | | | |
| | | | |

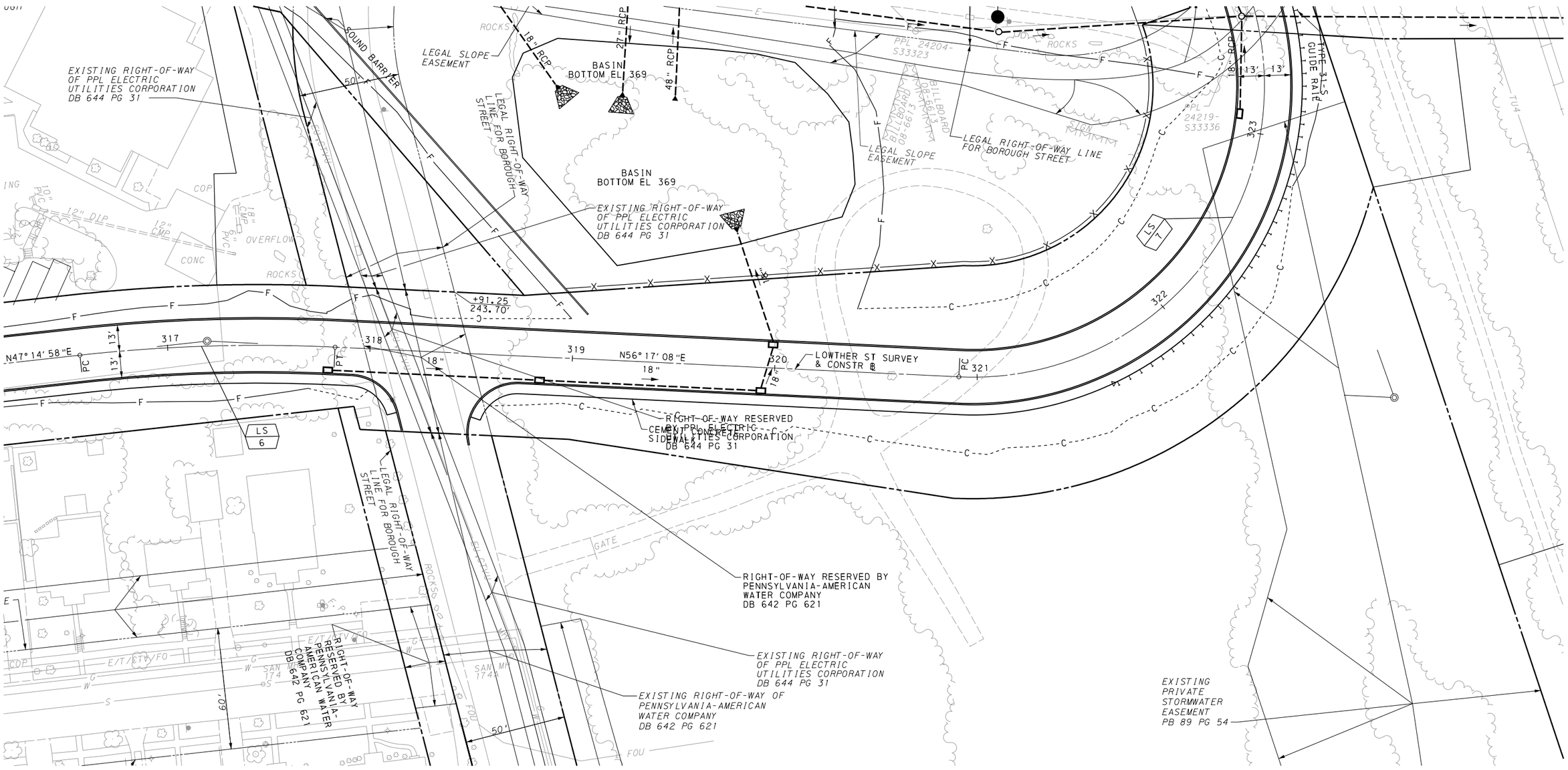


SEE SHEET 42 OF 103

SCALE

0 25 50 FEET

FOR LOWTHER STREET PROFILE, SEE SHEETS 87 & 88

9/26/2023
FILENAME: 43377WS-s-cv-pln14.dgn

SEE SHEET 45 OF 103

| DISTRICT | COUNTY | ROUTE | SECTION | SHEET |
|---|---|---|---|---|
| 8-0 | DAUPHIN | 0083 | 094 | 44 OF 103 |
| CITY OF HARRISBURG | | | | |

| REVISION NUMBER | REVISIONS | DATE | BY |
|---|---|---|---|
| | | | |
| | | | |

SEE SHEET 32 OF 103

SEE SHEET 34 OF 103

SINGLE FACE CONCRETE BARRIER

LEGAL RIGHT-OF-WAY LINE FOR CITY OF HARRISBURG

LEGAL RIGHT-OF-WAY LINE FOR LIMITED ACCESS

SR 8015 RAMP M CONSTR @

SR 8015 RAMP N CONSTR @

SR 8015 RAMP L CONSTR @

SINGLE FACE CONCRETE BARRIER

CONCRETE BARRIER END TRANSITION

LEGAL RIGHT-OF-WAY LINE FOR LIMITED ACCESS

LEGAL SLOPE EASEMENT

LEGAL AERIAL EASEMENT

COMFORT STATION (BY OTHERS)

POC STA 322+87.67 SR 8015 RAMP L CONSTR @=
POC STA 405+42.00 SR 8015 RAMP N CONSTR @

POC STA 212+56.02 SR 8015 RAMP K CONSTR @=
POC STA 509+37.96 SR 8015 RAMP M CONSTR @

BASIN
BOTTOM EL 304

N 32°06'53" W

S 76°13'26" W

S 27°02'12" E

S 48°50'07" W

N 43°06'53" W

N 43°06'53" W

| FOR RAMP K PROFILE, SEE SHEETS 99 & 100 |
|---|
| FOR RAMP N PROFILE, SEE SHEETS 97 & 98 |
| FOR RAMP L PROFILE, SEE SHEETS 95 & 96 |
| FOR RAMP M PROFILE, SEE SHEETS 89 & 90 |

SEE SHEET 33 OF 103

SCALE
0 25 50 FEET

9/26/2023
FILENAME: 43377-s-cv-pln09.dgn

| DISTRICT | COUNTY | ROUTE | SECTION | SHEET |
|---|---|---|---|---|
| 8-0 | DAUPHIN | 0083 | 094 | 45 OF 103 |
| CITY OF HARRISBURG | | | | |

| REVISION NUMBER | REVISIONS | DATE | BY |
|---|---|---|---|
| | | | |
| | | | |

SEE SHEET 46 OF 103

SEE SHEET 44 OF 103

POT STA 330+29.29 SR 8015 RAMP L CONSTR ℄=
POT STA 412+98.93 SR 8015 RAMP N CONSTR ℄, 24.00' LT=
POT STA 330+28.26 SR 8015 RAMP LN CONSTR ℄, 36.00' LT

POT STA 412+21.43 SR 8015 RAMP N CONSTR ℄=
POT STA 329+51.89 SR 8015 RAMP L CONSTR ℄, 24.00' RT=
POT STA 331+87.06 SR 8015 RAMP LN CONSTR ℄, 12.00' LT

POT STA 331+87.06 SR 8015 RAMP LN CONSTR ℄=
POT STA 329+51.89 SR 8015 RAMP L CONSTR ℄, 36.00' RT
POT STA 412+21.43 SR 8015 RAMP N CONSTR ℄, 12.00' RT

POC STA 499+82.12 SR 8015 RAMP M CONSTR ℄=
POT STA 202+51.90 SR 8015 RAMP K CONSTR ℄, 12.00' LT=
POT STA 202+51.47 SR 8015 RAMP KM CONSTR ℄, 24.00' LT

POT STA 202+51.90 SR 8015 RAMP K CONSTR ℄=
POT STA 202+51.47 SR 8015 RAMP KM CONSTR ℄, 12.00' LT=
POC STA 499+82.12 SR 8015 RAMP M CONSTR ℄, 12.00' RT

POT STA 202+51.47 SR 8015 RAMP KM CONSTR ℄=
POT STA 202+51.90 SR 8015 RAMP K CONSTR ℄, 12.00' RT=
POC STA 499+82.12 SR 8015 RAMP M CONSTR ℄, 24.00' RT

SINGLE FACE CONCRETE BARRIER
LEGAL RIGHT-OF-WAY LINE FOR LIMITED ACCESS
RW-XX
CONCRETE MEDIAN BARRIER
SR 8015 RAMP L CONSTR ℄
EXISTING RETAINING WALL TO REMAIN, SAWCUT BARRIER AT ℄
SR 8015 RAMP LN CONSTR ℄
CONCRETE MEDIAN BARRIER
SR 8015 RAMP KM CONSTR ℄
SR 8015 RAMP N CONSTR ℄
CONCRETE BARRIER END TRANSITION
SR 8015 RAMP K CONSTR ℄
SR 8015 RAMP M CONSTR ℄
PERMANENT IMPACT ATTENUATING DEVICE, TYPE V (SELF RESTORING), TEST LEVEL 3
SINGLE FACE CONCRETE BARRIER
LEGAL RIGHT-OF-WAY LINE FOR CITY OF HARRISBURG
LEGAL RIGHT-OF-WAY LINE
RIGHT-OF-WAY LINE

| |
|---|
| FOR RAMP LN PROFILE, SEE SHEET 98 |
| FOR RAMP KM PROFILE, SEE SHEET 101 |
| FOR RAMP K PROFILE, SEE SHEET 99 |
| FOR RAMP N PROFILE, SEE SHEET 98 |
| FOR RAMP L PROFILE, SEE SHEET 96 |
| FOR RAMP M PROFILE, SEE SHEET 89 |

SCALE
0 25 50 FEET

9/26/2023
FILENAME= 43377-s-cv-pln10.dgn

| DISTRICT | COUNTY | ROUTE | SECTION | SHEET |
|---|---|---|---|---|
| 8-0 | DAUPHIN | 0083 | 094 | 46 OF 103 |
| CITY OF HARRISBURG | | | | |

| REVISION NUMBER | REVISIONS | DATE | BY |
|---|---|---|---|
| | | | |
| | | | |

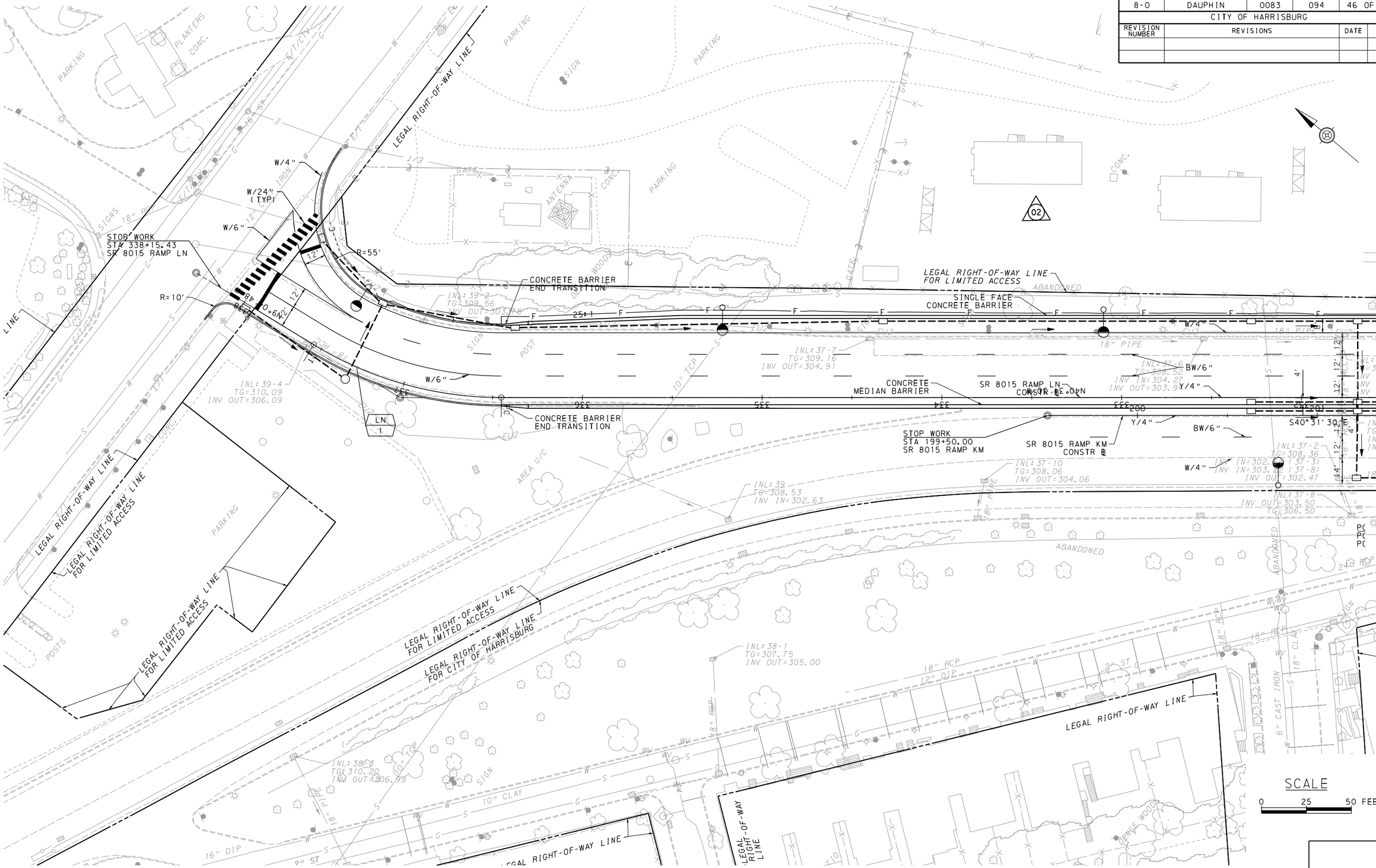


SEE SHEET 45 OF 103

FOR RAMP LN PROFILE, SEE SHEETS 102 & 103
FOR RAMP KM PROFILE, SEE SHEET 101

9/26/2023
FILENAME: 43377-s-cv-pln11.dgn

# South Bridge Structure Plans

Preliminary Design Plans for constructing the I-83 South Bridge including reconstruction and widening of the South Bridge as described in greater detail in Section 2.1.1 Proposed South Bridge Alternative, of the EA.

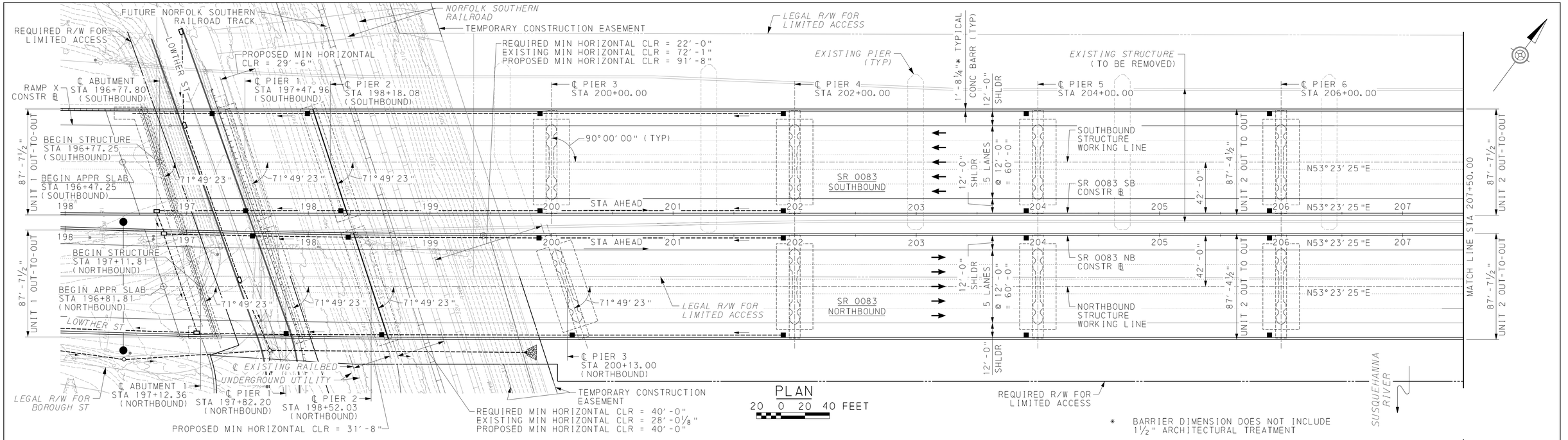


PLAN
20 0 20 40 FEET

* BARRIER DIMENSION DOES NOT INCLUDE 1½" ARCHITECTURAL TREATMENT

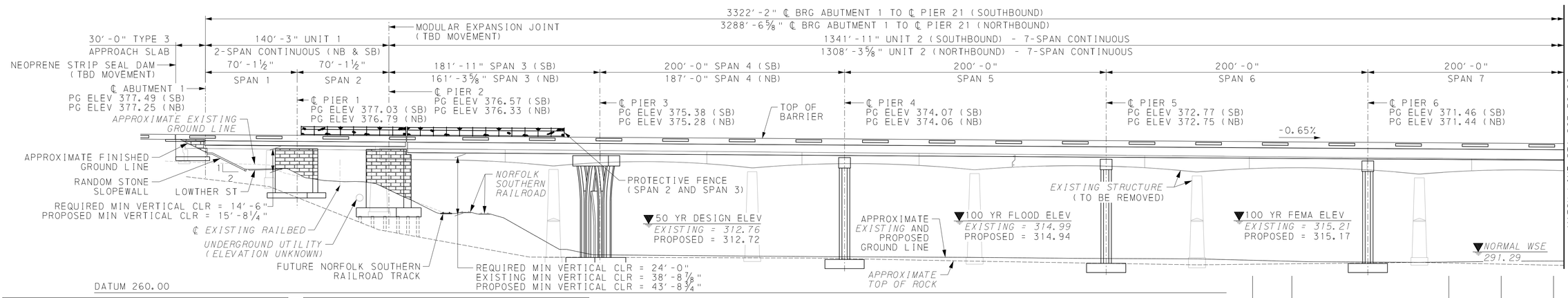


ELEVATION
20 0 20 40 FEET

## INDEX OF DRAWINGS

| SHEET NO. | TITLE |
|---|---|
| 1 | GENERAL PLAN & ELEVATION - 1 |
| 2 | GENERAL PLAN & ELEVATION - 2 |
| 3 | GENERAL PLAN & ELEVATION - 3 |
| 4 | TYPICAL SECTIONS - 1 |
| 5 | TYPICAL SECTIONS - 2 |
| 6 | TYPICAL PIER PLAN & ELEVATION |
| 7 | STAGING PLAN - 1 |
| 8 | STAGING PLAN - 2 |
| 9 | STAGING PLAN - 3 |
| 10 | STAGING PLAN - 4 |
| 11 | STAGING PLAN - 5 |
| 12 | STAGING PLAN - 6 |
| 13 | STAGING PLAN - 7 |
| 14 | STAGING PLAN - 8 |
| 15 | STAGING PLAN - 9 |
| 16 | STAGING PLAN - 10 |
| 17 | STAGING PLAN - 11 |
| 18 | STAGING PLAN - 12 |
| 19 | STAGING PLAN - 13 |
| 20 | STAGING ELEVATION - 1 |
| 21 | STAGING ELEVATION - 2 |
| 22 | STAGING ELEVATION - 3 |

## INDEX OF DRAWINGS (CONT'D)

| SHEET NO. | TITLE |
|---|---|
| 23 | STAGING ELEVATION - 4 |
| 24 | STAGING ELEVATION - 5 |
| 25 | STAGING ELEVATION - 6 |
| 26 | STAGING TYPICAL SECTIONS - 1 |
| 27 | STAGING TYPICAL SECTIONS - 2 |
| 28 | STAGING TYPICAL SECTIONS - 3 |

### LEGEND

(APPLIES TO ALL GENERAL PLAN & ELEVATION SHEETS)

- DIRECTION OF TRAFFIC
- 200 PROPOSED CONTOUR
- *200* *EXISTING CONTOUR*
- *EXISTING LEGAL RIGHT-OF-WAY*
- REQUIRED LEGAL RIGHT-OF-WAY
- PROPOSED DRAINAGE
- *EXISTING WATERWAY*
- *E* *EXISTING ELECTRIC*
- *EU* *EXISTING ELECTRIC UNDERGROUND*
- *S* *EXISTING SANITARY SEWER*
- *X* *EXISTING FENCE*
- *EXISTING GUIDE RAIL*
- ■ APPROXIMATE SCUPPER LOCATION

### VERTICAL ALIGNMENT DATA

LOWTHER ST

STA AHEAD

PVI STA 322+05.00
ELEV 361.81
VC 330.00'
MO 1.54'

-6.76%
-3.02%

STA 323+70.00
ELEV 356.83

-3.02%

STA 326+68.78
ELEV 347.81

### HORIZONTAL ALIGNMENT AND CURVE DATA

LOWTHER ST

PC STA 320+90.97
PI STA 323+06.21
PT STA 323+73.54
Δ = 112°25'58" LT
T = 215.24'
D = 39°47'19"
L = 282.57'
R = 144.00'
E = 114.97'

STA 323+73.54
N56°8'50"W
STA 326+68.78

### NOTES:

1. ALL LONGITUDINAL DIMENSIONS MEASURED ALONG THE STRUCTURE WORKING LINES, UNLESS OTHERWISE NOTED.
2. FOUNDATION TYPE(S) ARE TO BE DETERMINED DURING FINAL DESIGN. FOUNDATION TYPES INDICATED ARE CONCEPTUAL AND ARE NOT TO BE USED FOR BIDDING PURPOSES.

| Mark | Description | By | Chk'd | Recm'd | Date |
|---|---|---|---|---|---|
| REVISIONS | | | | | |

SR 0083 PREVIOUSLY KNOWN AS LR 767
BMS STR ID: 22-0083-0414-2378 (NB)
22-0083-0415-2340 (SB)

MPMS/ECMS PROJ: 113754
BRKEY: 69031 (NB)
69085 (SB)

HNTB

CONCEPTUAL

# COMMONWEALTH OF PENNSYLVANIA
DEPARTMENT OF TRANSPORTATION

# CUMBERLAND AND DAUPHIN COUNTIES
# SR 0083 SECTION 094
SR 0083 NB SEG 0414 OFFSET 2378
SR 0083 SB SEG 0415 OFFSET 2340
SR 0083 NB STA 197+11.81 SR 0083 SB STA 196+77.25
OVER LOWTHER ST, NSRC & SUSQUEHANNA RIVER
19-SPAN CONTINUOUS STEEL MULTI-GIRDER BRIDGE
TYPE, SIZE & LOCATION
# GENERAL PLAN AND ELEVATION - 1

PREPARED BY:
HNTB CORPORATION
4507 NORTH FRONT STREET
SUITE 300
HARRISBURG, PA 17110

RECOMMENDED _____

SHEET 1 OF 28

S-40918 (NB)
S-40966 (SB)

10/2/2023
FILENAME: 43377-s-br-gpe21.dgn

| DES: AMV | DES CKD: JRM | DWG: MKB | DWG CKD: EMG |
|---|---|---|---|

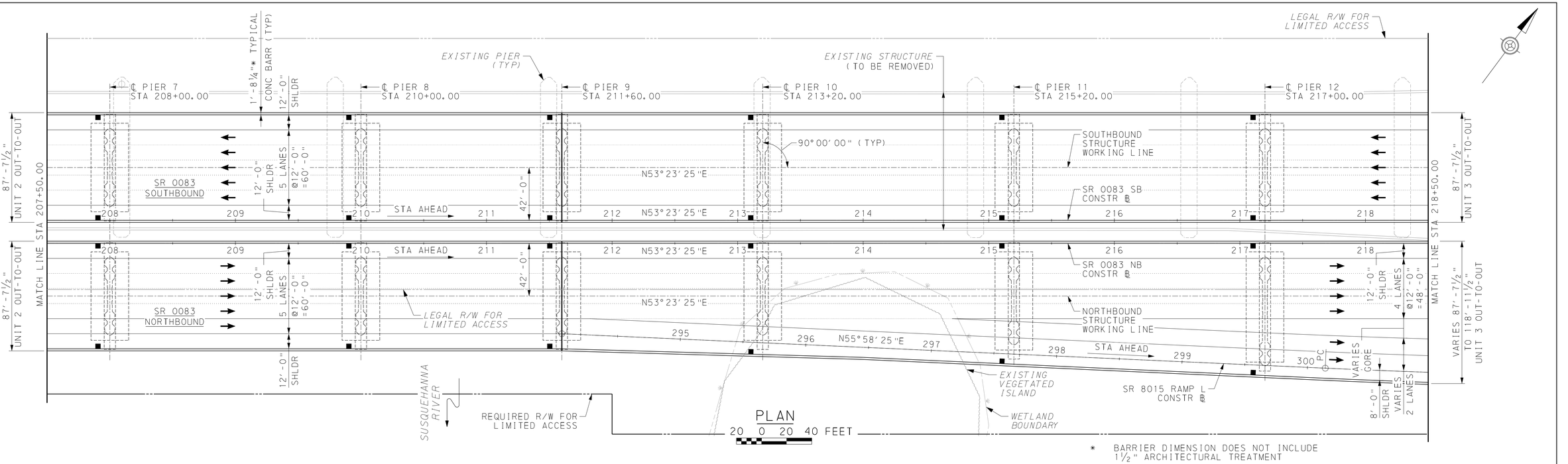


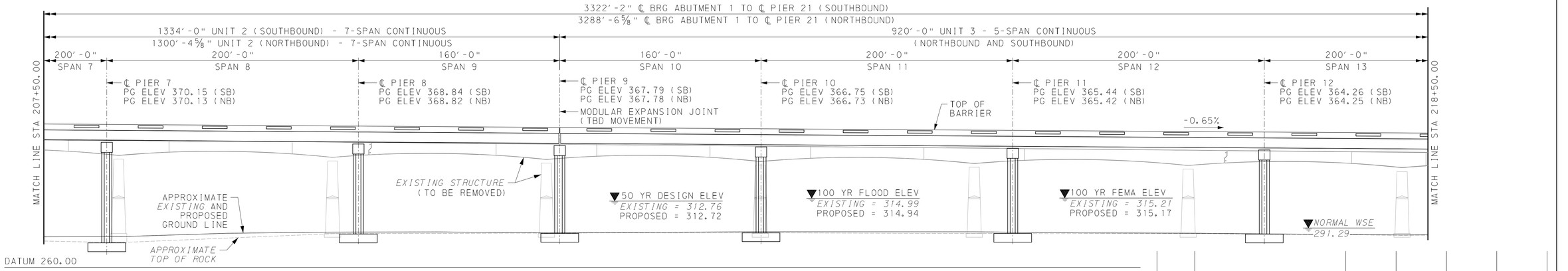


ELEVATION
20 0 20 40 FEET

## VERTICAL ALIGNMENT DATA

### SR 0083 SOUTHBOUND

STA AHEAD

STA 196+36.64 ELEV 377.76 — -0.65% — STA 230+59.64 ELEV 355.37

### SR 0083 NORTHBOUND

STA AHEAD

STA 196+33.93 ELEV 377.76 — -0.65% — STA 230+56.93 ELEV 355.37

## HORIZONTAL ALIGNMENT AND CURVE DATA

### SR 0083 SOUTHBOUND

PRC STA 189+81.71
PI STA 193+34.18
PT STA 196+86.41
Δ = 3°38'15" LT
T = 352.47'
D = 0°30'58"
L = 704.70'
R = 11100.00'
E = 5.59'

STA 196+86.41 — N53°23'25"E — STA 234+02.31

### SR 0083 NORTHBOUND

PC STA 192+39.22
PI STA 195+91.69
PT STA 199+43.93
Δ = 3°38'15" LT
T = 352.47'
D = 0°30'58"
L = 704.70'
R = 11100.00'
E = 5.59'

STA 199+43.93 — N53°23'25"E — STA 233+90.83

## HYDRAULIC DATA

DRAINAGE AREA: 24,100 SQUARE MILES

| FREQUENCY | | MAGNITUDE | ELEVATION | VELOCITY |
|---|---|---|---|---|
| 50 YEAR FLOOD-DESIGN | PROPOSED | 615,700 CFS | 312.72 | 7.7 F/S |
| | *EXISTING* | *615,700 CFS* | *312.76* | *7.6 F/S* |
| 100 YEAR FLOOD | PROPOSED | 705,700 CFS | 314.94 | 8.1 F/S |
| | *EXISTING* | *705,700 CFS* | *314.99* | *8.0 F/S* |
| 100 YEAR FLOOD-FEMA | PROPOSED | 700,000 CFS | 315.17 | 7.9 F/S |
| | *EXISTING* | *700,000 CFS* | *315.21* | *7.9 F/S* |

NOTE: THE VELOCITY REPRESENTS THE INTERNAL BRIDGE VELOCITY AT THE UPSTREAM BRIDGE FACE.

FLOOD OF RECORD: 1,020,000 CFS (1972)

NOTES:

1. SEE NOTES ON SHEET 1.

| Mark | Description | By | Chk'd | Recm'd | Date |
|---|---|---|---|---|---|
| REVISIONS | | | | | |

SR 0083 PREVIOUSLY KNOWN AS LR 767
BMS STR ID: 22-0083-0414-2378 (NB)
22-0083-0415-2340 (SB)

MPMS/ECMS PROJ: 113754
BRKEY: 69031 (NB)
69085 (SB)

HNTB

CONCEPTUAL

PREPARED BY:
HNTB CORPORATION
4507 NORTH FRONT STREET
SUITE 300
HARRISBURG, PA 17110

COMMONWEALTH OF PENNSYLVANIA
DEPARTMENT OF TRANSPORTATION

# CUMBERLAND AND DAUPHIN COUNTIES
# SR 0083 SECTION 094

SR 0083 NB SEG 0414 OFFSET 2378
SR 0083 SB SEG 0415 OFFSET 2340
SR 0083 NB STA 197+11.81 SR 0083 SB STA 196+77.25
OVER LOWTHER ST, NSRC & SUSQUEHANNA RIVER
19-SPAN CONTINUOUS STEEL MULTI-GIRDER BRIDGE
TYPE, SIZE & LOCATION
GENERAL PLAN AND ELEVATION - 2

RECOMMENDED _____

SHEET 2 OF 28

S-40918 (NB)
S-40966 (SB)

| DES: AMV | DES CKD: JRM | DWG: MKB | DWG CKD: EMG |
|---|---|---|---|

10/2/2023
FILENAME: 43377-s-br-gpe22.dgn

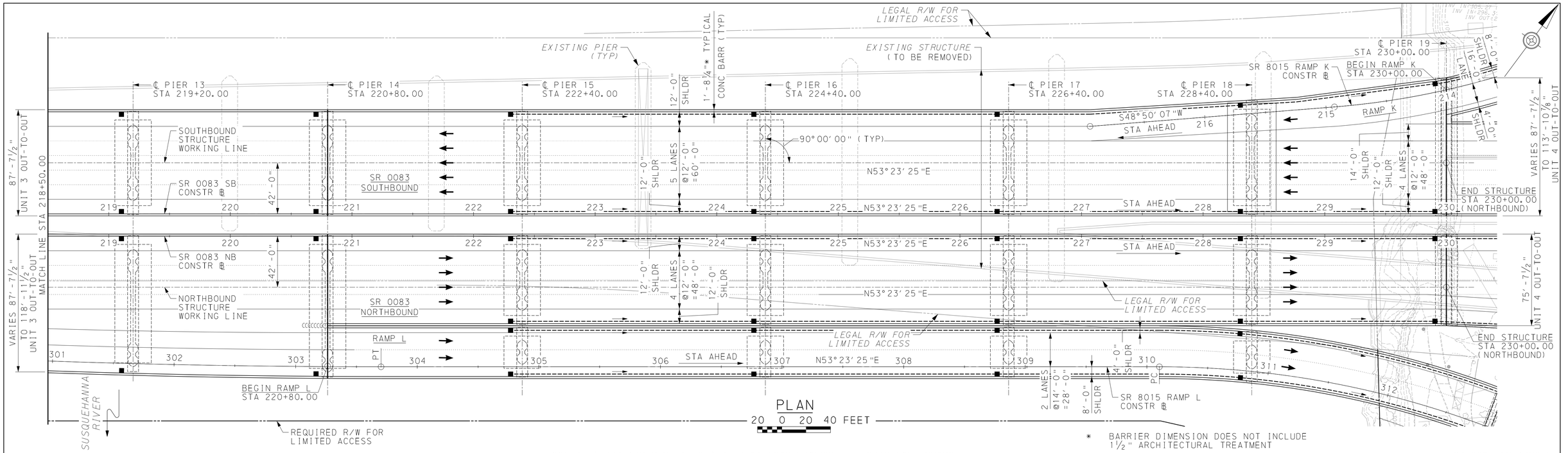


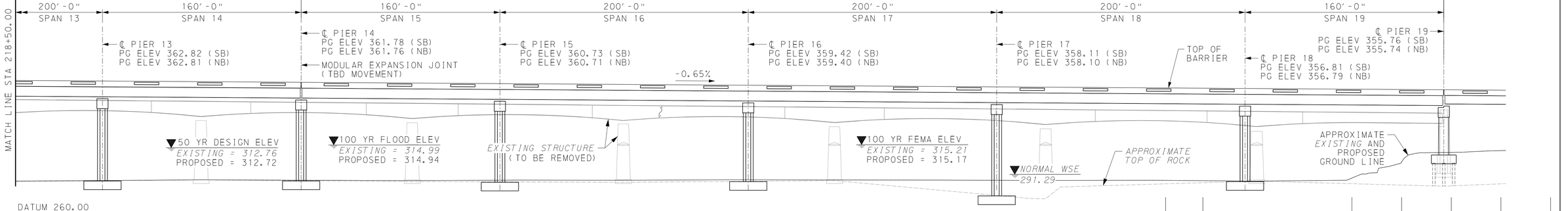


## VERTICAL ALIGNMENT DATA

### SR 8015 RAMP L

STA AHEAD

STA 294+05.55, ELEV 367.97, -0.65%, STA 307+59.77, ELEV 359.16

PVI STA 310+59.77, ELEV 357.21, VC 600.00', MO -3.61', -0.65%, -5.47%

STA 313+59.77, ELEV 340.82, -5.47%, STA 317+12.99, ELEV 321.51

### SR 8015 RAMP K

STA AHEAD

PVI STA 212+49.79, ELEV 353.94, VC 300.00', MO -1.69', 5.40%, 0.88%

STA 213+99.79, ELEV 355.26, 0.88%, STA 216+94.46, ELEV 357.84

## HORIZONTAL ALIGNMENT AND CURVE DATA

### SR 8015 RAMP L

STA 294+05.56, N55°58'25"E, STA 299+41.33

PC STA 299+41.33, PI STA 301+92.24, PT STA 304+43.07, Δ = 2°35'00" LT, T = 250.91', D = 0°30'54", L = 501.74', R = 11128.00', E = 2.83'

STA 304+43.07, N53°23'25"E, STA 310+10.30

PC STA 310+10.30, PI STA 311+49.94, PT STA 312+86.52, Δ = 20°47'48" RT, T = 139.65', D = 7°31'44", L = 276.22', R = 761.00', E = 12.71'

STA 312+86.52, N74°11'13"E, STA 315+21.11

### SR 8015 RAMP K

PCC STA 206+40.42, PI STA 211+40.45, PT STA 214+92.86, Δ = 75°08'26" RT, T = 500.03', D = 8°48'53", L = 852.44', R = 650.00', E = 170.08'

STA 214+92.86, S48°50'07"W, STA 216+94.46

NOTES:

1. SEE NOTES ON SHEET 1.
2. RAMP L ELEVATION NOT SHOWN FOR CLARITY.

| Mark | Description | By | Chk'd | Recm'd | Date |
|---|---|---|---|---|---|
| REVISIONS | | | | | |

SR 0083 PREVIOUSLY KNOWN AS LR 767
BMS STR ID: 22-0083-0414-2378 (NB), 22-0083-0415-2340 (SB)
MPMS/ECMS PROJ: 113754
BRKEY: 69031 (NB), 69085 (SB)

HNTB

CONCEPTUAL

PREPARED BY:
HNTB CORPORATION
4507 NORTH FRONT STREET
SUITE 300
HARRISBURG, PA 17110

COMMONWEALTH OF PENNSYLVANIA
DEPARTMENT OF TRANSPORTATION

CUMBERLAND AND DAUPHIN COUNTIES
SR 0083 SECTION 094
SR 0083 NB SEG 0414 OFFSET 2378
SR 0083 SB SEG 0415 OFFSET 2340
SR 0083 NB STA 197+11.81 SR 0083 SB STA 196+77.25
OVER LOWTHER ST, NSRC & SUSQUEHANNA RIVER
19-SPAN CONTINUOUS STEEL MULTI-GIRDER BRIDGE
TYPE, SIZE & LOCATION
GENERAL PLAN AND ELEVATION - 3

RECOMMENDED _____

SHEET 3 OF 28

S-40918 (NB)
S-40966 (SB)

10/2/2023
FILENAME: 43377-s-br-gpe23.dgn

| DES: AMV | DES CKD: JRM | DWG: MKB | DWG CKD: EMG |
|---|---|---|---|

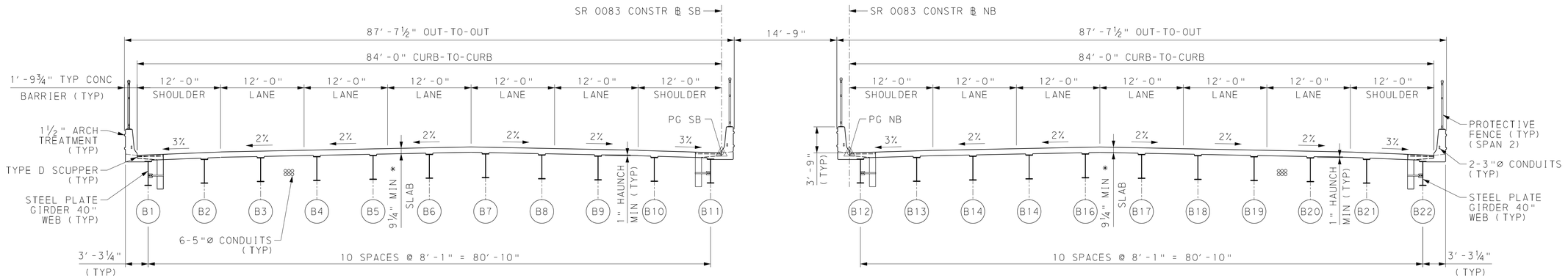


## TYPICAL SECTION - UNIT 1

2 0 4 8 FEET

1/8"=1′-0"

* INCLUDES 1¼" LMC OVERLAY

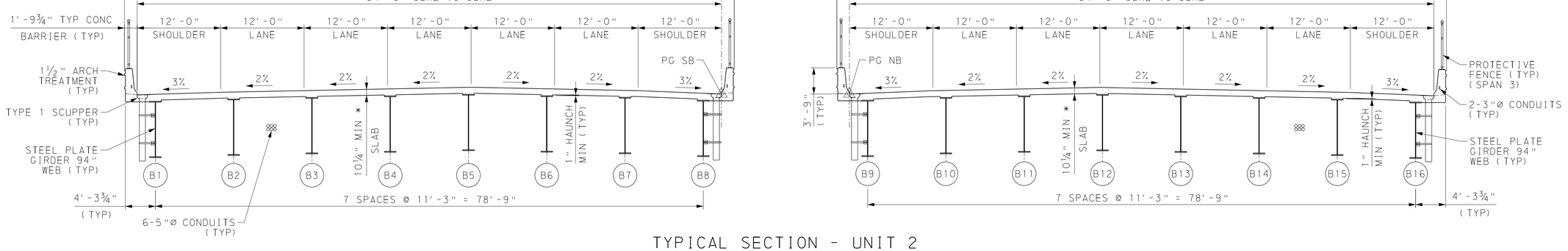


## TYPICAL SECTION - UNIT 2

2 0 4 8 FEET

1/8"=1′-0"

* INCLUDES 1¼" LMC OVERLAY

### DESIGN SPECIFICATIONS

1. AASHTO LRFD BRIDGE DESIGN SPECIFICATIONS, 8TH EDITION, 2017, AND AS SUPPLEMENTED BY DESIGN MANUAL, PART 4 (DM-4) DECEMBER 2019 EDITION.
2. LIVE LOAD DISTRIBUTION TO GIRDERS IS TO BE BASED UPON DM-4 DISTRIBUTION FACTORS.
3. DESIGN IS IN ACCORDANCE WITH THE LRFD METHOD.
4. PROVIDE GRADE 60 REINFORCING STEEL BARS THAT MEET THE REQUIREMENTS OF ASTM A615, A996, OR A706. PROVIDE STAINLESS STEEL REINFORCING BARS IN THE BRIDGE DECK.

### *EXISTING STRUCTURE DATA*

*STRUCTURE TYPE:*
*21-SPAN STEEL DECK GIRDER BRIDGE*
*SUBSTRUCTURE TYPE:*
*REINFORCED CONCRETE ABUTMENTS ON MULTIPLE FOUNDATION TYPES*
*REINFORCED CONCRETE MULTI-COLUMN BENTS ON MULTIPLE FOUNDATION TYPES*
*BRIDGE LENGTH: 3324′-1¼"*
*SKEW: VARIES*
*CLEAR ROADWAY: VARIES*

| Mark | Description | By | Chk'd | Recm'd | Date |
|---|---|---|---|---|---|
| REVISIONS | | | | | |

SR 0083 PREVIOUSLY KNOWN AS LR 767
BMS STR ID: 22-0083-0414-2378 (NB)
22-0083-0415-2340 (SB)

MPMS/ECMS PROJ: 113754
BRKEY: 69031 (NB)
69085 (SB)

HNTB

COMMONWEALTH OF PENNSYLVANIA
DEPARTMENT OF TRANSPORTATION

CONCEPTUAL

CUMBERLAND AND DAUPHIN COUNTIES
SR 0083 SECTION 094
SR 0083 NB SEG 0414 OFFSET 2378
SR 0083 SB SEG 0415 OFFSET 2340
SR 0083 NB STA 197+11.81 SR 0083 SB STA 196+77.25
OVER LOWTHER ST, NSRC & SUSQUEHANNA RIVER
19-SPAN CONTINUOUS STEEL MULTI-GIRDER BRIDGE
TYPE, SIZE & LOCATION
TYPICAL SECTION - 1

PREPARED BY:
HNTB CORPORATION
4507 NORTH FRONT STREET
SUITE 300
HARRISBURG, PA 17110

RECOMMENDED _____

SHEET 4 OF 28

S-40918 (NB)
S-40966 (SB)

10/2/2023
FILENAME: 43377-s-br-typ21.dgn

| DES: AMV | DES CKD: JRM | DWG: MKB | DWG CKD: EMG |
|---|---|---|---|

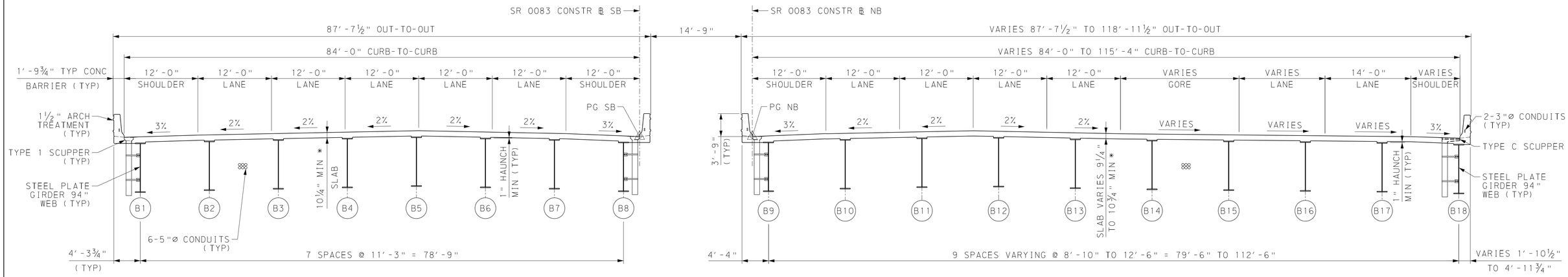


## TYPICAL SECTION - UNIT 3

2 0 4 8 FEET

⅛"=1′-0"

* INCLUDES 1¼" LMC OVERLAY

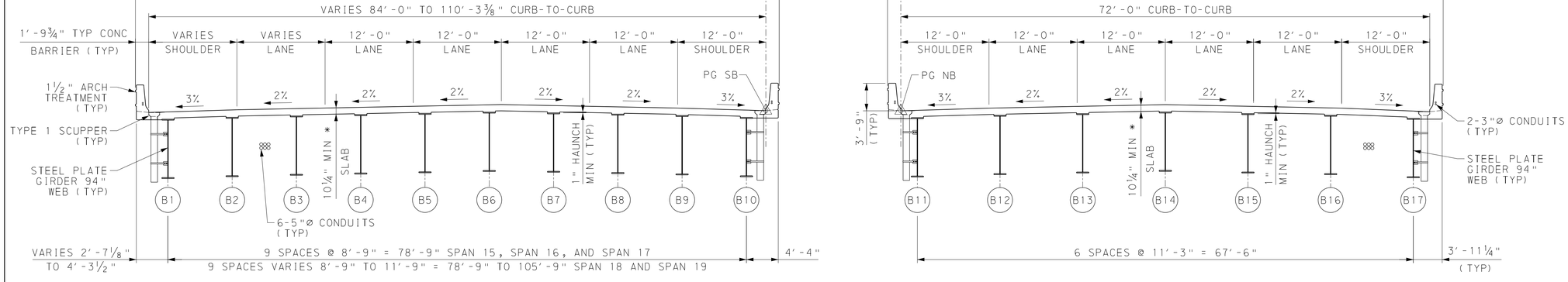


## TYPICAL SECTION - UNIT 4

2 0 4 8 FEET

⅛"=1′-0"

* INCLUDES 1¼" LMC OVERLAY

| Mark | Description | By | Chk'd | Recm'd | Date |
|---|---|---|---|---|---|
| REVISIONS | | | | | |

SR 0083 PREVIOUSLY KNOWN AS LR 767
BMS STR ID: 22-0083-0414-2378 (NB)
22-0083-0415-2340 (SB)

MPMS/ECMS PROJ: 113754
BRKEY: 69031 (NB)
69085 (SB)

HNTB

# COMMONWEALTH OF PENNSYLVANIA
DEPARTMENT OF TRANSPORTATION

CONCEPTUAL

# CUMBERLAND AND DAUPHIN COUNTIES
## SR 0083 SECTION 094
SR 0083 NB SEG 0414 OFFSET 2378
SR 0083 SB SEG 0415 OFFSET 2340
SR 0083 NB STA 197+11.81 SR 0083 SB STA 196+77.25
OVER LOWTHER ST, NSRC & SUSQUEHANNA RIVER
19-SPAN CONTINUOUS STEEL MULTI-GIRDER BRIDGE
TYPE, SIZE & LOCATION
## TYPICAL SECTION - 2

PREPARED BY:
HNTB CORPORATION
4507 NORTH FRONT STREET
SUITE 300
HARRISBURG, PA 17110

RECOMMENDED _____

SHEET 5 OF 28

S-40918 (NB)
S-40966 (SB)

10/2/2023
FILENAME: 43377-s-br-typ22.dgn

| DES: AMV | DES CKD: JRM | DWG: MKB | DWG CKD: EMG |
|---|---|---|---|

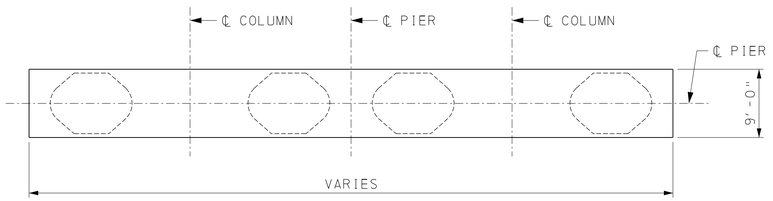


CAP PLAN TYPICAL Y-PIER

5 0 5 10 FEET

1"=10'

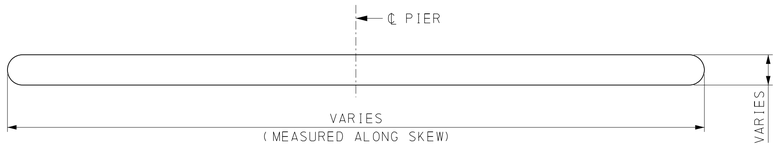


CAP PLAN TYPICAL WALL PIER

5 0 5 10 FEET

1"=10'

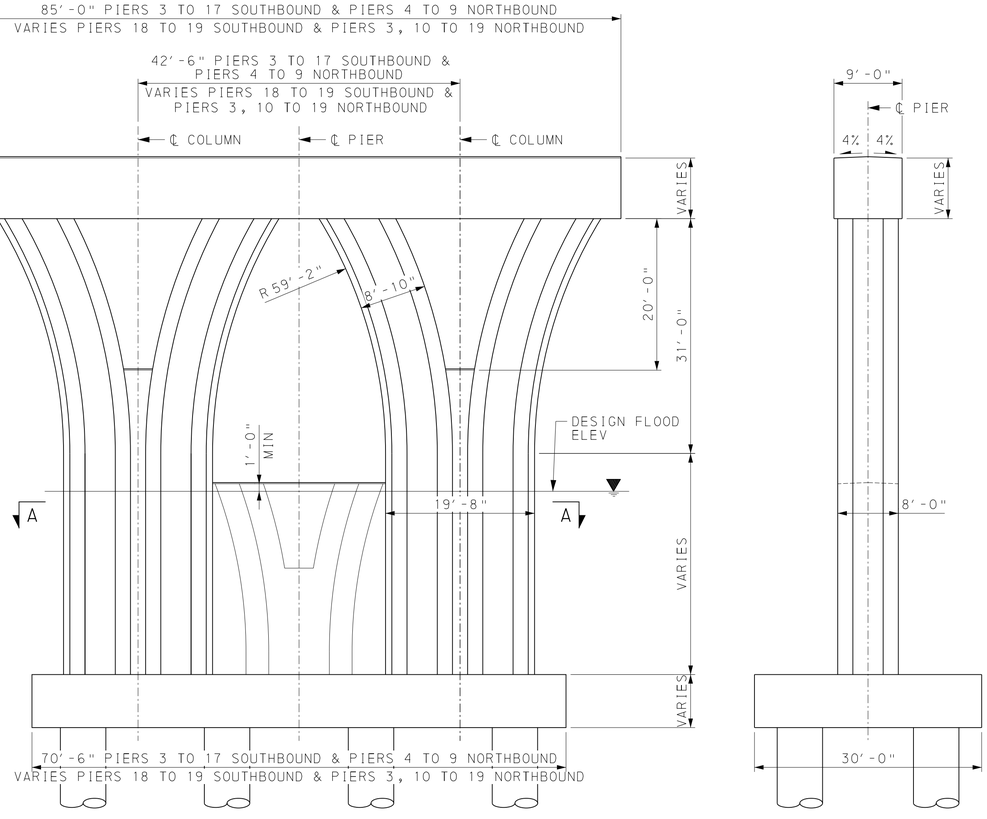


ELEVATION TYPICAL Y-PIER

5 0 5 10 FEET

1"=10'

(PIERS 3 TO 19)




END VIEW TYPICAL Y-PIER

5 0 5 10 FEET

1"=10'

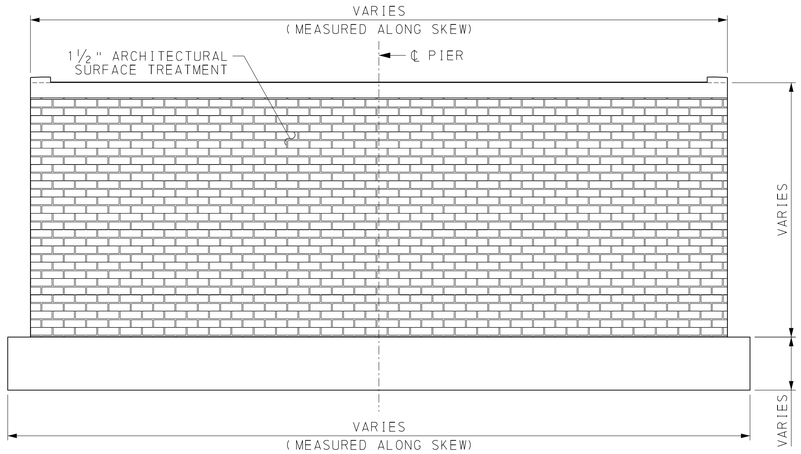


ELEVATION TYPICAL WALL PIER

5 0 5 10 FEET

1"=10'

(PIERS 1 AND 2)

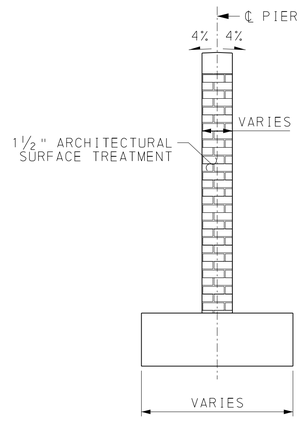


END VIEW TYPICAL WALL PIER

5 0 5 10 FEET

1"=10'

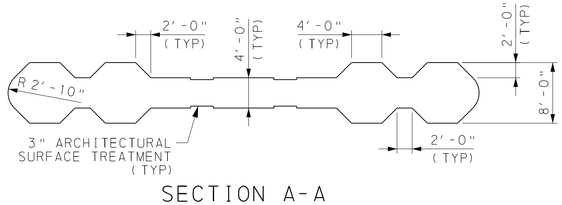


SECTION A-A

5 0 5 10 FEET

1"=10'

NOTES:

1. PIER SHAPE AND DIMENSIONS SHOWN ARE CONCEPTUAL. PIER DESIGN TO BE FINALIZED DURING FINAL DESIGN.
2. FOUNDATION TYPE(S) ARE TO BE DETERMINED DURING FINAL DESIGN. FOUNDATION TYPES INDICATED ARE CONCEPTUAL AND ARE NOT TO BE USED FOR BIDDING PURPOSES.

| Mark | Description | By | Chk'd | Recm'd | Date |
|---|---|---|---|---|---|
| REVISIONS | | | | | |

SR 0083 PREVIOUSLY KNOWN AS LR 767
BMS STR ID: 22-0083-0414-2378 (NB)
22-0083-0415-2340 (SB)

MPMS/ECMS PROJ: 113754
BRKEY: 69031 (NB)
69085 (SB)

HNTB

COMMONWEALTH OF PENNSYLVANIA
DEPARTMENT OF TRANSPORTATION

CONCEPTUAL

# CUMBERLAND AND DAUPHIN COUNTIES
# SR 0083 SECTION 094

SR 0083 NB SEG 0414 OFFSET 2378
SR 0083 SB SEG 0415 OFFSET 2340
SR 0083 NB STA 197+11.81 SR 0083 SB STA 196+77.25
OVER LOWTHER ST, NSRC & SUSQUEHANNA RIVER
19-SPAN CONTINUOUS STEEL MULTI-GIRDER BRIDGE
TYPE, SIZE & LOCATION

## TYPICAL PIER PLAN & ELEVATION

PREPARED BY:
HNTB CORPORATION
4507 NORTH FRONT STREET
SUITE 300
HARRISBURG, PA 17110

RECOMMENDED _____

SHEET 6 OF 28

S-40918 (NB)
S-40966 (SB)

| DES: JAC | DES CKD: AMV | DWG: MKB | DWG CKD: EMG |
|---|---|---|---|

10/2/2023
FILENAME: 43377-s-br-typ23.dgn

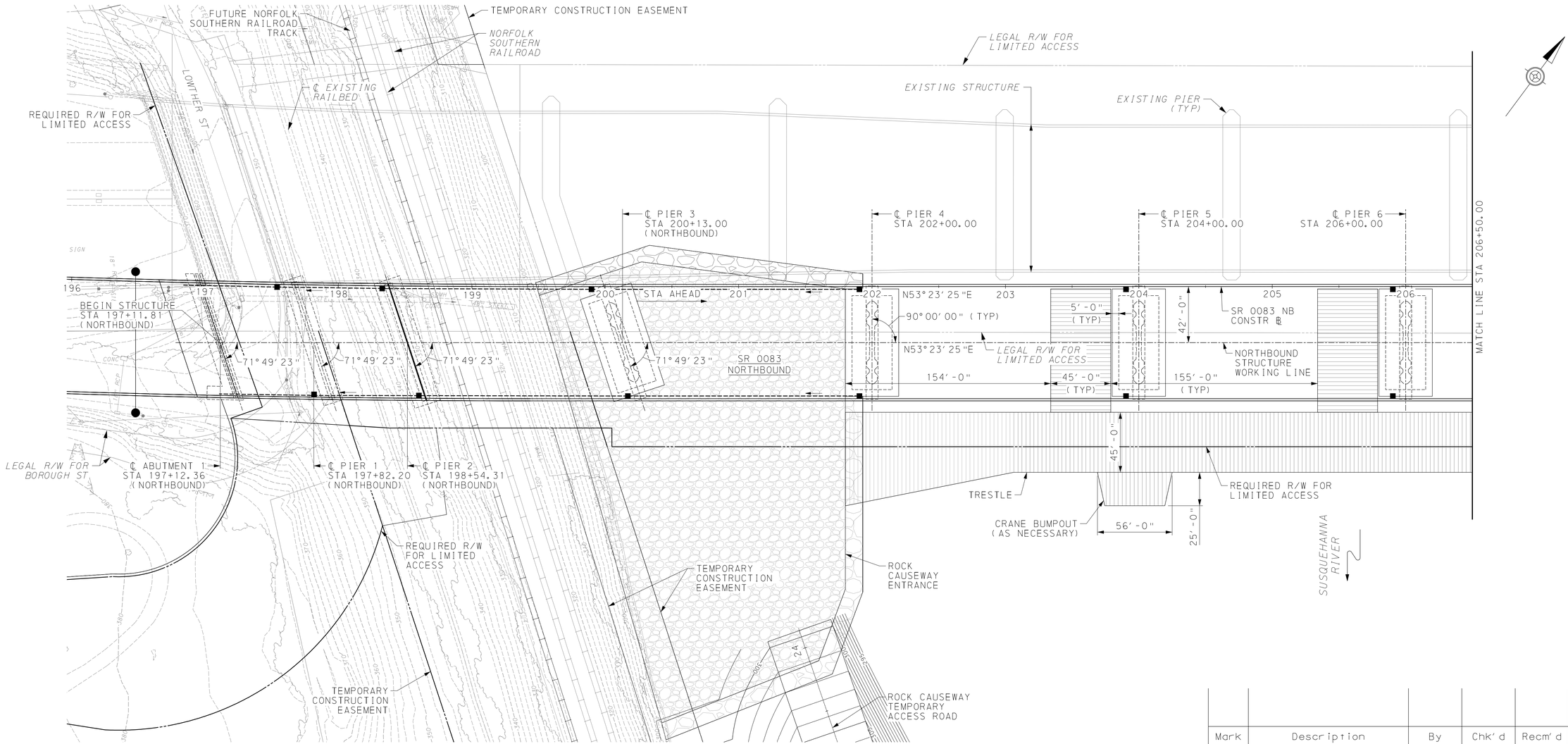


CAUSEWAY PLAN - STAGE 1

20 0 20 40 FEET

1"=40'

## CONSTRUCTION SEQUENCE NOTES:

STAGE 1

1. CONSTRUCT ACCESS ROADS, ROCK CAUSEWAY ENTRANCE, AND TRESTLE TO WESTERN PORTION OF THE NORTHBOUND STRUCTURE.
2. INSTALL TRAFFIC CONTROL TO MAINTAIN THREE (3) NORTHBOUND LANES OF TRAFFIC.
3. DEMO PORTION OF EXISTING NORTHBOUND STRUCTURE AS NECESSARY TO FACILITATE PLACEMENT OF PROPOSED NORTHBOUND STRUCTURE.
4. PLACE TEMPORARY EXCAVATION SUPPORT AND PROTECTION SYSTEM AND COFFERDAMS. EXCAVATE AS NECESSARY FOR FOUNDATION PLACEMENT.
5. PLACE WESTERN PORTION OF NORTHBOUND SUBSTRUCTURE.
6. PLACE WESTERN PORTION OF NORTHBOUND SUPERSTRUCTURE.

| DES: MKB | DES CKD: EMG | DWG: MKB | DWG CKD: EMG |
|---|---|---|---|

10/2/2023
FILENAME: 43377-s-br-sq21.dgn

| Mark | Description | By | Chk'd | Recm'd | Date |
|---|---|---|---|---|---|
| REVISIONS | | | | | |

SR 0083 PREVIOUSLY KNOWN AS LR 767
BMS STR ID: 22-0083-0414-2378 (NB)
22-0083-0415-2340 (SB)

MPMS/ECMS PROJ: 113754
BRKEY: 69031 (NB)
69085 (SB)

HNTB

COMMONWEALTH OF PENNSYLVANIA
DEPARTMENT OF TRANSPORTATION

CONCEPTUAL

CUMBERLAND AND DAUPHIN COUNTIES
SR 0083 SECTION 094
SR 0083 NB SEG 0414 OFFSET 2378
SR 0083 SB SEG 0415 OFFSET 2340
SR 0083 NB STA 197+11.81 SR 0083 SB STA 196+77.25
OVER LOWTHER ST, NSRC & SUSQUEHANNA RIVER
19-SPAN CONTINUOUS STEEL MULTI-GIRDER BRIDGE
TYPE, SIZE & LOCATION
STAGING PLAN - 1

PREPARED BY:
HNTB CORPORATION
4507 NORTH FRONT STREET
SUITE 300
HARRISBURG, PA 17110

RECOMMENDED _____

SHEET 7 OF 28

S-40918 (NB)
S-40966 (SB)

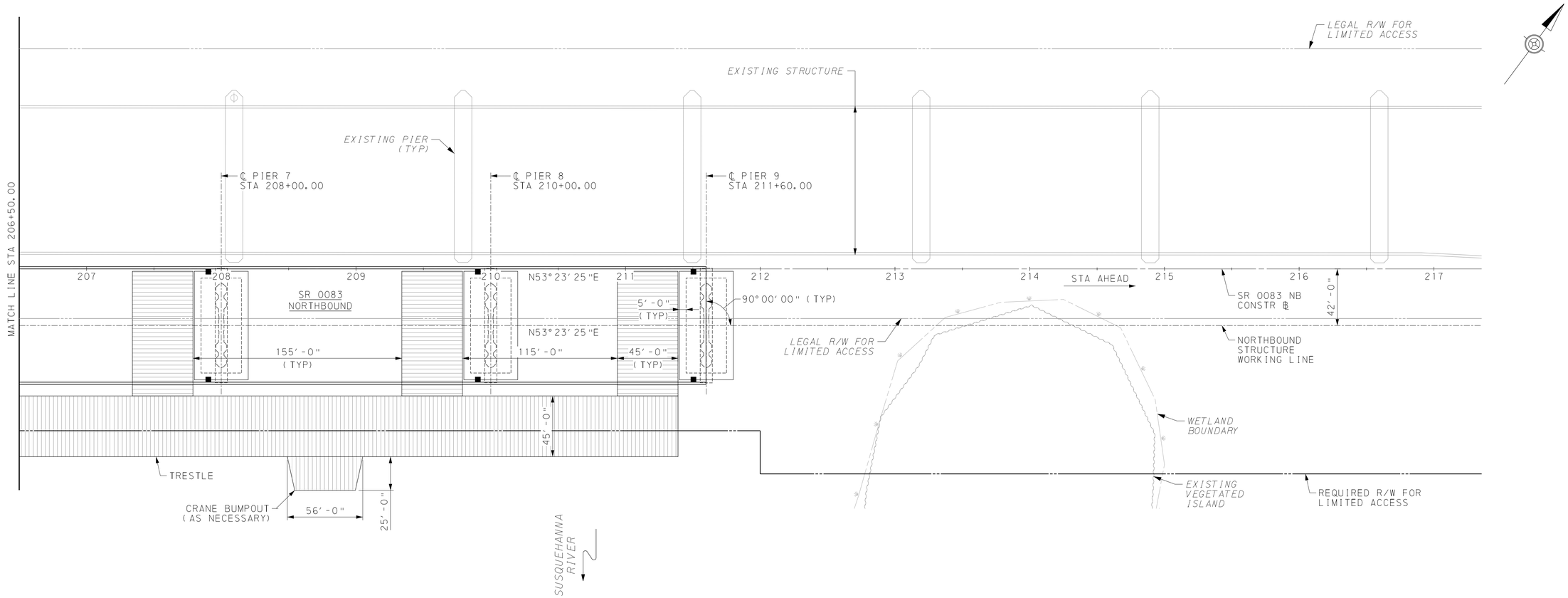


CAUSEWAY PLAN - STAGE 1

20 0 20 40 FEET

1"=40'

| Mark | Description | By | Chk'd | Recm'd | Date |
|---|---|---|---|---|---|
| REVISIONS | | | | | |

SR 0083 PREVIOUSLY KNOWN AS LR 767
BMS STR ID: 22-0083-0414-2378 (NB)
22-0083-0415-2340 (SB)

MPMS/ECMS PROJ: 113754
BRKEY: 69031 (NB)
69085 (SB)

HNTB

COMMONWEALTH OF PENNSYLVANIA
DEPARTMENT OF TRANSPORTATION

CONCEPTUAL

CUMBERLAND AND DAUPHIN COUNTIES
SR 0083 SECTION 094
SR 0083 NB SEG 0414 OFFSET 2378
SR 0083 SB SEG 0415 OFFSET 2340
SR 0083 NB STA 197+11.81 SR 0083 SB STA 196+77.25
OVER LOWTHER ST, NSRC & SUSQUEHANNA RIVER
19-SPAN CONTINUOUS STEEL MULTI-GIRDER BRIDGE
TYPE, SIZE & LOCATION
STAGING PLAN - 2

REFERENCES:
STAGE 1 NOTES

SHEETS:
07

PREPARED BY:
HNTB CORPORATION
4507 NORTH FRONT STREET
SUITE 300
HARRISBURG, PA 17110

RECOMMENDED _____

SHEET 8 OF 28

S-40918 (NB)
S-40966 (SB)

10/2/2023
FILENAME: 43377-s-br-sig22.dgn

| DES: MKB | DES CKD: EMG | DWG: MKB | DWG CKD: EMG |
|---|---|---|---|

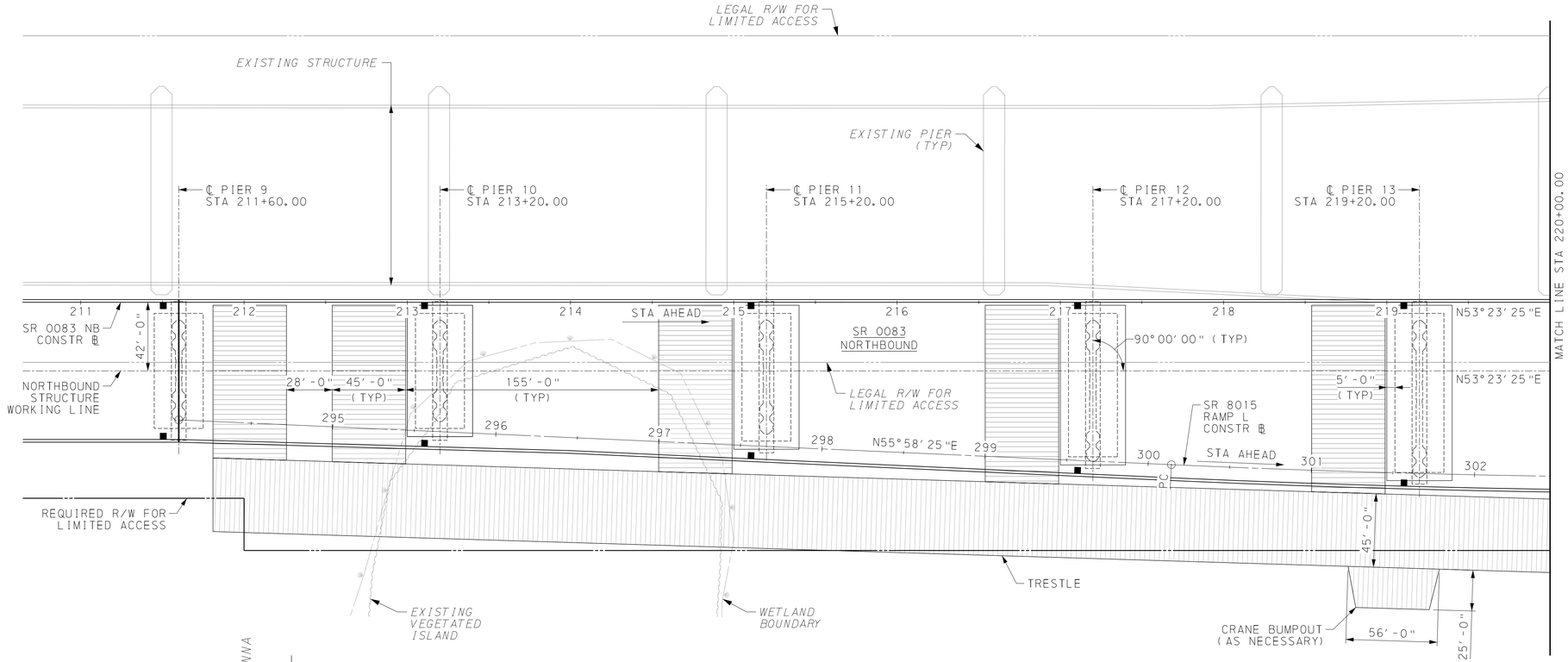


## CAUSEWAY PLAN - STAGE 2A

20 0 20 40 FEET

1"=40'

| Mark | Description | By | Chk'd | Recm'd | Date |
|---|---|---|---|---|---|
| REVISIONS | | | | | |

SR 0083 PREVIOUSLY KNOWN AS LR 767
BMS STR ID: 22-0083-0414-2378 (NB)
22-0083-0415-2340 (SB)

MPMS/ECMS PROJ: 113754
BRKEY: 69031 (NB)
69085 (SB)

HNTB

# COMMONWEALTH OF PENNSYLVANIA
DEPARTMENT OF TRANSPORTATION

CONCEPTUAL

# CUMBERLAND AND DAUPHIN COUNTIES
# SR 0083 SECTION 094
SR 0083 NB SEG 0414 OFFSET 2378
SR 0083 SB SEG 0415 OFFSET 2340
SR 0083 NB STA 197+11.81 SR 0083 SB STA 196+77.25
OVER LOWTHER ST, NSRC & SUSQUEHANNA RIVER
19-SPAN CONTINUOUS STEEL MULTI-GIRDER BRIDGE
TYPE, SIZE & LOCATION
## STAGING PLAN - 3

REFERENCES: STAGE 2A NOTES

SHEETS: 10

PREPARED BY:
HNTB CORPORATION
4507 NORTH FRONT STREET
SUITE 300
HARRISBURG, PA 17110

RECOMMENDED _____

SHEET 9 OF 28

S-40918 (NB)
S-40966 (SB)

| DES: MKB | DES CKD: EMG | DWG: MKB | DWG CKD: EMG |
|---|---|---|---|

10/2/2023
FILENAME: 43377-s-br-stg23.dgn

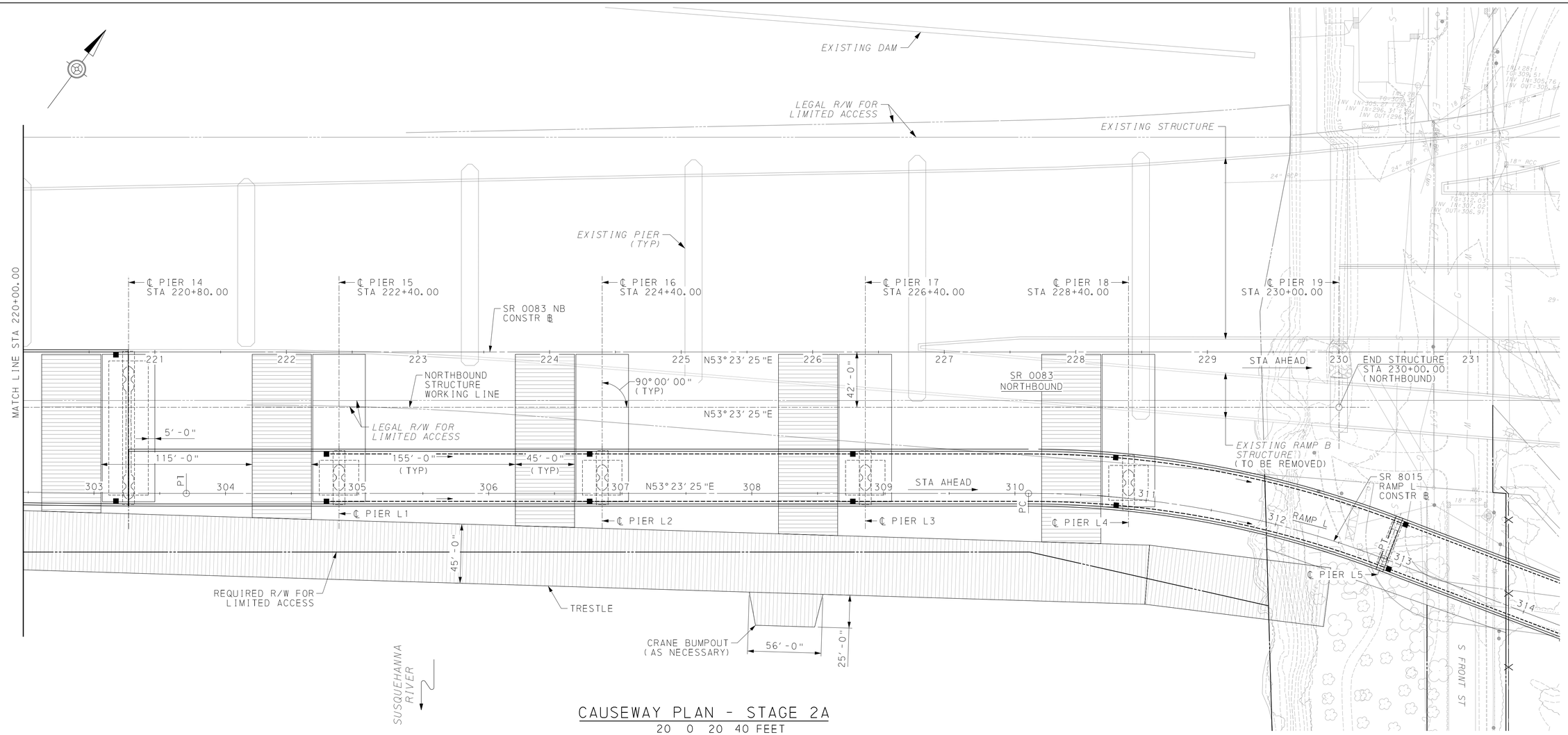


CAUSEWAY PLAN - STAGE 2A

20 0 20 40 FEET

1"=40'

## CONSTRUCTION SEQUENCE NOTES:

STAGE 2A

1. REMOVE WESTERN PORTION OF THE TRESTLE, TEMPORARY EXCAVATION SUPPORT AND PROTECTION SYSTEM AND COFFERDAMS. ROCK CAUSEWAY AT WESTERN SHORE TO REMAIN.

2. CONSTRUCT ACCESS RAMPS AND TRESTLE TO EASTERN PORTION OF THE NORTHBOUND STRUCTURE.

3. REMOVE, AS NECESSARY, PORTIONS OF THE EXISTING NORTHBOUND MAINLINE SUBSTRUCTURE AND SUPERSTRUCTURE TO FACILITATE CONSTRUCTION.

4. PLACE TEMPORARY EXCAVATION SUPPORT AND PROTECTION SYSTEM AND COFFERDAMS FROM PIER 9 TO PIER 14 AND FOR ALL RAMP L SUBSTRUCTURE UNITS. EXCAVATE AS NECESSARY FOR FOUNDATION PLACEMENT.

5. PLACE EASTERN PORTION OF NORTHBOUND SUBSTRUCTURE, PIER 9 TO PIER 14 AND ALL RAMP L SUBSTRUCTURE UNITS.

6. PLACE EASTERN PORTION OF NORTHBOUND SUPERSTRUCTURE, FROM PIER 9 TO PIER 14 AND RAMP L IN ITS ENTIRETY.

| Mark | Description | By | Chk'd | Recm'd | Date |
|---|---|---|---|---|---|
| REVISIONS | | | | | |

SR 0083 PREVIOUSLY KNOWN AS LR 767
BMS STR ID: 22-0083-0414-2378 (NB)
22-0083-0415-2340 (SB)
MPMS/ECMS PROJ: 113754
BRKEY: 69031 (NB)
69085 (SB)

HNTB

COMMONWEALTH OF PENNSYLVANIA
DEPARTMENT OF TRANSPORTATION

CONCEPTUAL

# CUMBERLAND AND DAUPHIN COUNTIES
# SR 0083 SECTION 094
SR 0083 NB SEG 0414 OFFSET 2378
SR 0083 SB SEG 0415 OFFSET 2340
SR 0083 NB STA 197+11.81 SR 0083 SB STA 196+77.25
OVER LOWTHER ST, NSRC & SUSQUEHANNA RIVER
19-SPAN CONTINUOUS STEEL MULTI-GIRDER BRIDGE
TYPE, SIZE & LOCATION
## STAGING PLAN - 4

PREPARED BY:
HNTB CORPORATION
4507 NORTH FRONT STREET
SUITE 300
HARRISBURG, PA 17110

RECOMMENDED _____

SHEET 10 OF 28

S-40918 (NB)
S-40966 (SB)

| DES: MKB | DES CKD: EMG | DWG: MKB | DWG CKD: EMG |
|---|---|---|---|

10/2/2023
FILENAME: 43377-s-br-sg24.dgn

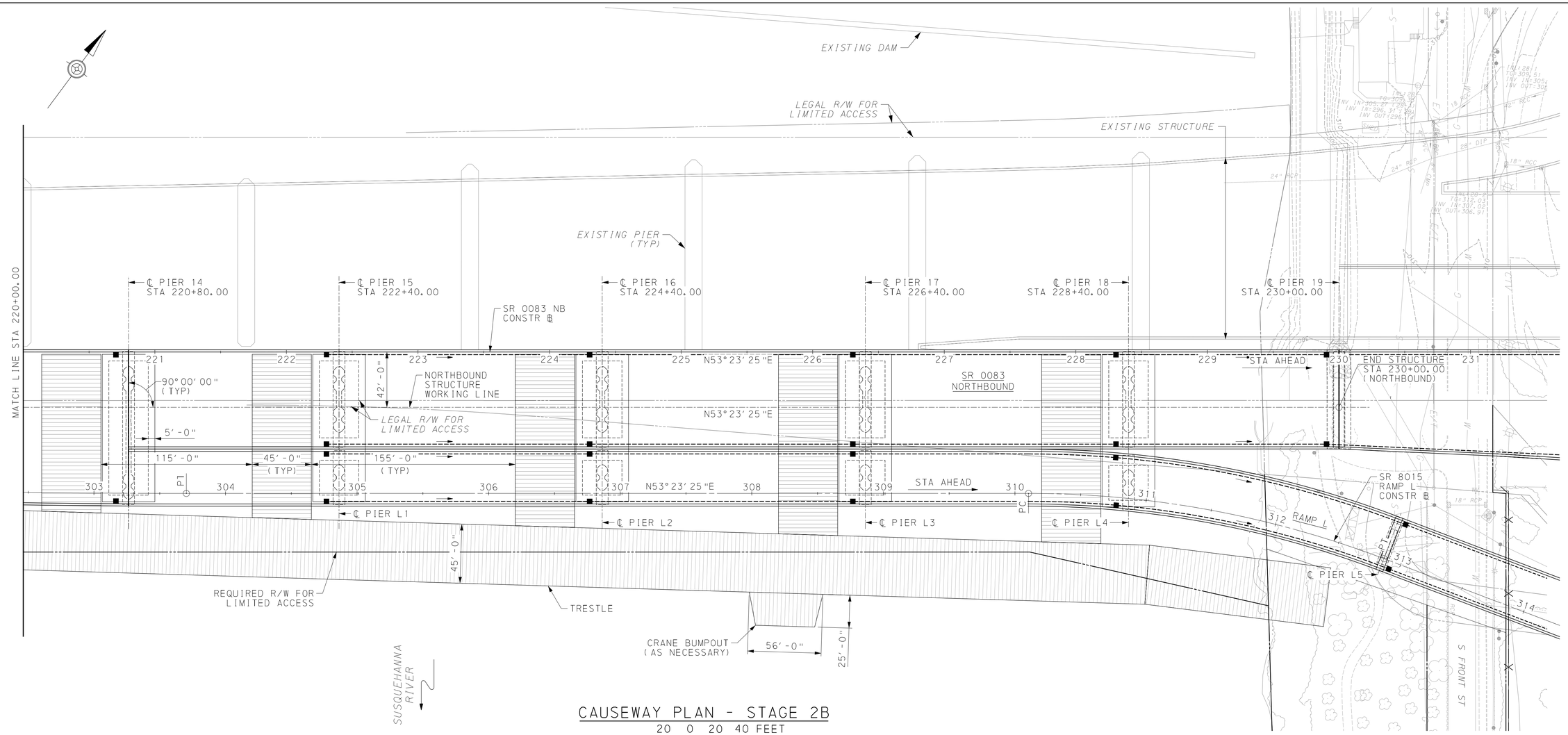


## CAUSEWAY PLAN - STAGE 2B

20 0 20 40 FEET

1"=40'

| Mark | Description | By | Chk'd | Recm'd | Date |
|---|---|---|---|---|---|
| REVISIONS | | | | | |

SR 0083 PREVIOUSLY KNOWN AS LR 767
BMS STR ID: 22-0083-0414-2378 (NB)
22-0083-0415-2340 (SB)

MPMS/ECMS PROJ: 113754
BRKEY: 69031 (NB)
69085 (SB)

## CONSTRUCTION SEQUENCE NOTES:

STAGE 2B

1. SHIFT EXISTING RAMP B TRAFFIC ONTO NEWLY CONSTRUCTED RAMP L.
2. REMOVE, AS NECESSARY, PORTIONS OF THE EXISTING NORTHBOUND MAINLINE AND RAMP B SUBSTRUCTURE AND SUPERSTRUCTURE TO FACILITATE CONSTRUCTION.
3. PLACE TEMPORARY EXCAVATION SUPPORT AND PROTECTION SYSTEM AND COFFERDAMS FOR REMAINING EASTERN PORTIONS OF THE NORTHBOUND STRUCTURE. EXCAVATE AS NECESSARY FOR FOUNDATION PLACEMENT.
4. PLACE THE REMAINING EASTERN PORTION OF NORTHBOUND SUBSTRUCTURE.
5. PLACE THE REMAINING EASTERN PORTION OF NORTHBOUND SUPERSTRUCTURE.

HNTB

CONCEPTUAL

COMMONWEALTH OF PENNSYLVANIA
DEPARTMENT OF TRANSPORTATION

# CUMBERLAND AND DAUPHIN COUNTIES
# SR 0083 SECTION 094

SR 0083 NB SEG 0414 OFFSET 2378
SR 0083 SB SEG 0415 OFFSET 2340
SR 0083 NB STA 197+11.81 SR 0083 SB STA 196+77.25
OVER LOWTHER ST, NSRC & SUSQUEHANNA RIVER
19-SPAN CONTINUOUS STEEL MULTI-GIRDER BRIDGE
TYPE, SIZE & LOCATION
## STAGING PLAN - 5

PREPARED BY:
HNTB CORPORATION
4507 NORTH FRONT STREET
SUITE 300
HARRISBURG, PA 17110

RECOMMENDED _____

SHEET 11 OF 28

S-40918 (NB)
S-40966 (SB)

| DES: MKB | DES CKD: EMG | DWG: MKB | DWG CKD: EMG |
|---|---|---|---|

10/2/2023
FILENAME: 43377-s-br-sig25.dgn

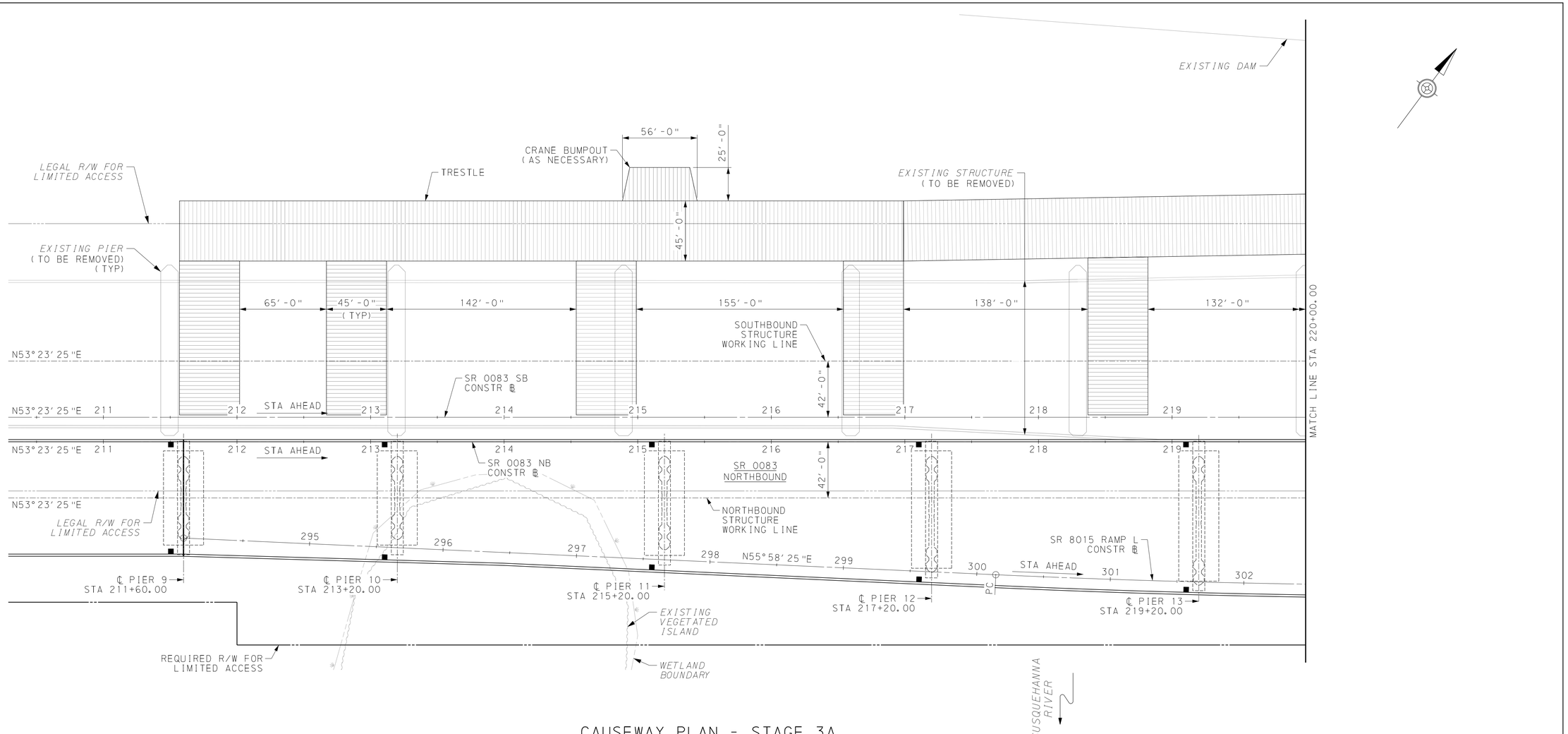


CAUSEWAY PLAN - STAGE 3A

20 0 20 40 FEET

1"=40'

| Mark | Description | By | Chk'd | Recm'd | Date |
|---|---|---|---|---|---|
| REVISIONS | | | | | |

SR 0083 PREVIOUSLY KNOWN AS LR 767
BMS STR ID: 22-0083-0414-2378 (NB)
22-0083-0415-2340 (SB)

MPMS/ECMS PROJ: 113754
BRKEY: 69031 (NB)
69085 (SB)

## CONSTRUCTION SEQUENCE NOTES:

STAGE 3A

1. REMOVE EASTERN PORTION OF THE NORTHBOUND TRESTLE, TEMPORARY EXCAVATION SUPPORT AND PROTECTION SYSTEM AND COFFERDAMS.
2. CONSTRUCT ACCESS RAMPS AND TRESTLE TO EASTERN PORTION OF THE SOUTHBOUND STRUCTURE.
3. SHIFT NORTHBOUND AND SOUTHBOUND TRAFFIC FROM EXISTING STRUCTURE TO NEWLY CONSTRUCTED NORTHBOUND STRUCTURE.
4. DEMO REMAINING EASTERN PORTIONS OF THE EXISTING NORTHBOUND AND SOUTHBOUND STRUCTURE.

| DES: MKB | DES CKD: EMG | DWG: MKB | DWG CKD: EMG |
|---|---|---|---|

10/2/2023
FILENAME: 43377-s-br-stg26a.dgn

HNTB

CONCEPTUAL

COMMONWEALTH OF PENNSYLVANIA
DEPARTMENT OF TRANSPORTATION

# CUMBERLAND AND DAUPHIN COUNTIES
# SR 0083 SECTION 094

SR 0083 NB SEG 0414 OFFSET 2378
SR 0083 SB SEG 0415 OFFSET 2340
SR 0083 NB STA 197+11.81 SR 0083 SB STA 196+77.25
OVER LOWTHER ST, NSRC & SUSQUEHANNA RIVER
19-SPAN CONTINUOUS STEEL MULTI-GIRDER BRIDGE
TYPE, SIZE & LOCATION

## STAGING PLAN - 6

PREPARED BY:
HNTB CORPORATION
4507 NORTH FRONT STREET
SUITE 300
HARRISBURG, PA 17110

RECOMMENDED _____

SHEET 12 OF 28

S-40918 (NB)
S-40966 (SB)

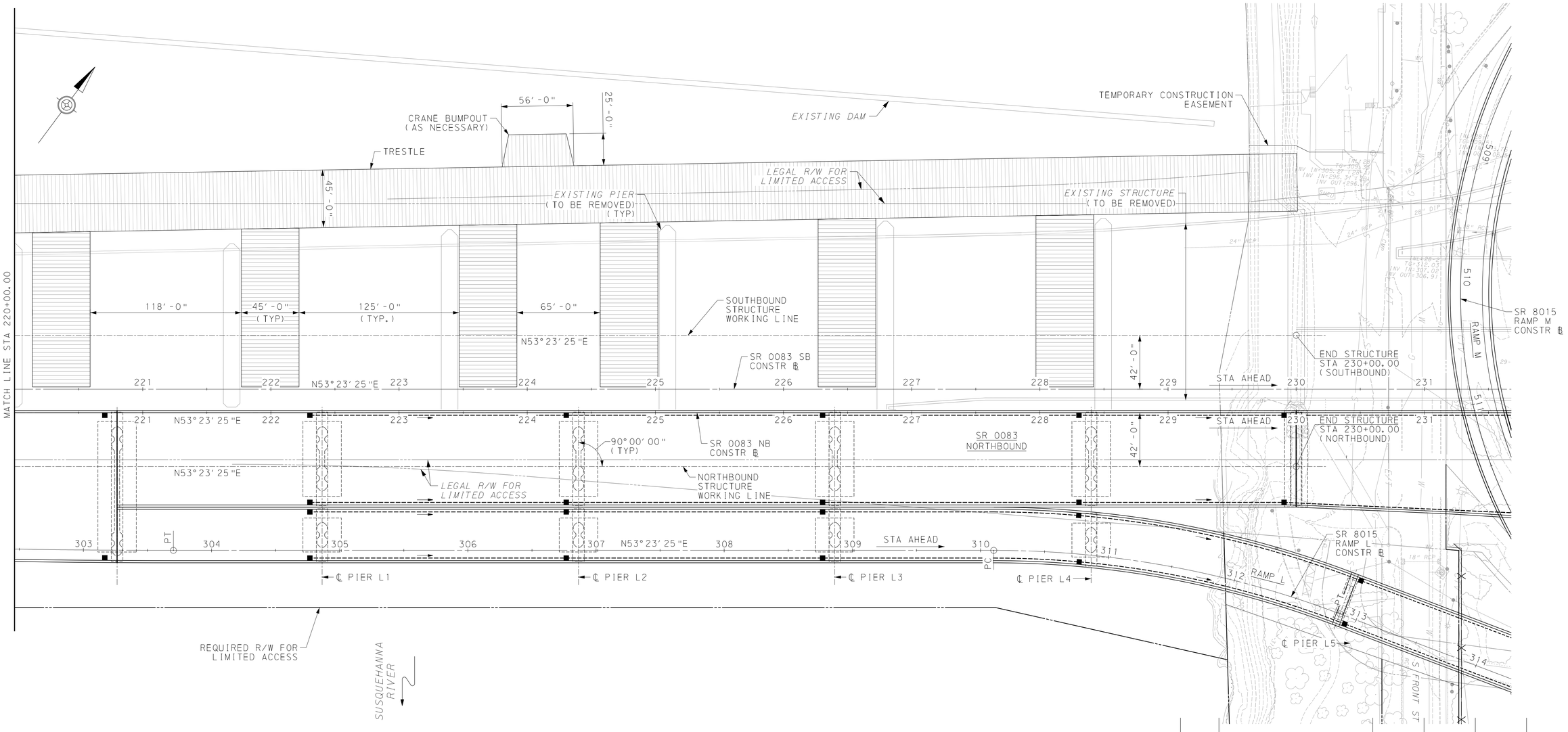


## CAUSEWAY PLAN - STAGE 3A

20 0 20 40 FEET

1"=40'

| Mark | Description | By | Chk'd | Recm'd | Date |
|---|---|---|---|---|---|
| REVISIONS | | | | | |

SR 0083 PREVIOUSLY KNOWN AS LR 767
BMS STR ID: 22-0083-0414-2378 (NB)
22-0083-0415-2340 (SB)

MPMS/ECMS PROJ: 113754
BRKEY: 69031 (NB)
69085 (SB)

HNTB

# COMMONWEALTH OF PENNSYLVANIA
DEPARTMENT OF TRANSPORTATION

CONCEPTUAL

# CUMBERLAND AND DAUPHIN COUNTIES
# SR 0083 SECTION 094
SR 0083 NB SEG 0414 OFFSET 2378
SR 0083 SB SEG 0415 OFFSET 2340
SR 0083 NB STA 197+11.81 SR 0083 SB STA 196+77.25
OVER LOWTHER ST, NSRC & SUSQUEHANNA RIVER
19-SPAN CONTINUOUS STEEL MULTI-GIRDER BRIDGE
TYPE, SIZE & LOCATION
## STAGING PLAN - 7

PREPARED BY:
HNTB CORPORATION
4507 NORTH FRONT STREET
SUITE 300
HARRISBURG, PA 17110

RECOMMENDED _____

SHEET 13 OF 28

S-40918 (NB)
S-40966 (SB)

REFERENCES: STAGE 3A NOTES

SHEETS: 12

| DES: MKB | DES CKD: EMG | DWG: MKB | DWG CKD: EMG |
|---|---|---|---|

10/2/2023
FILENAME: 43377-s-br-stg27a.dgn

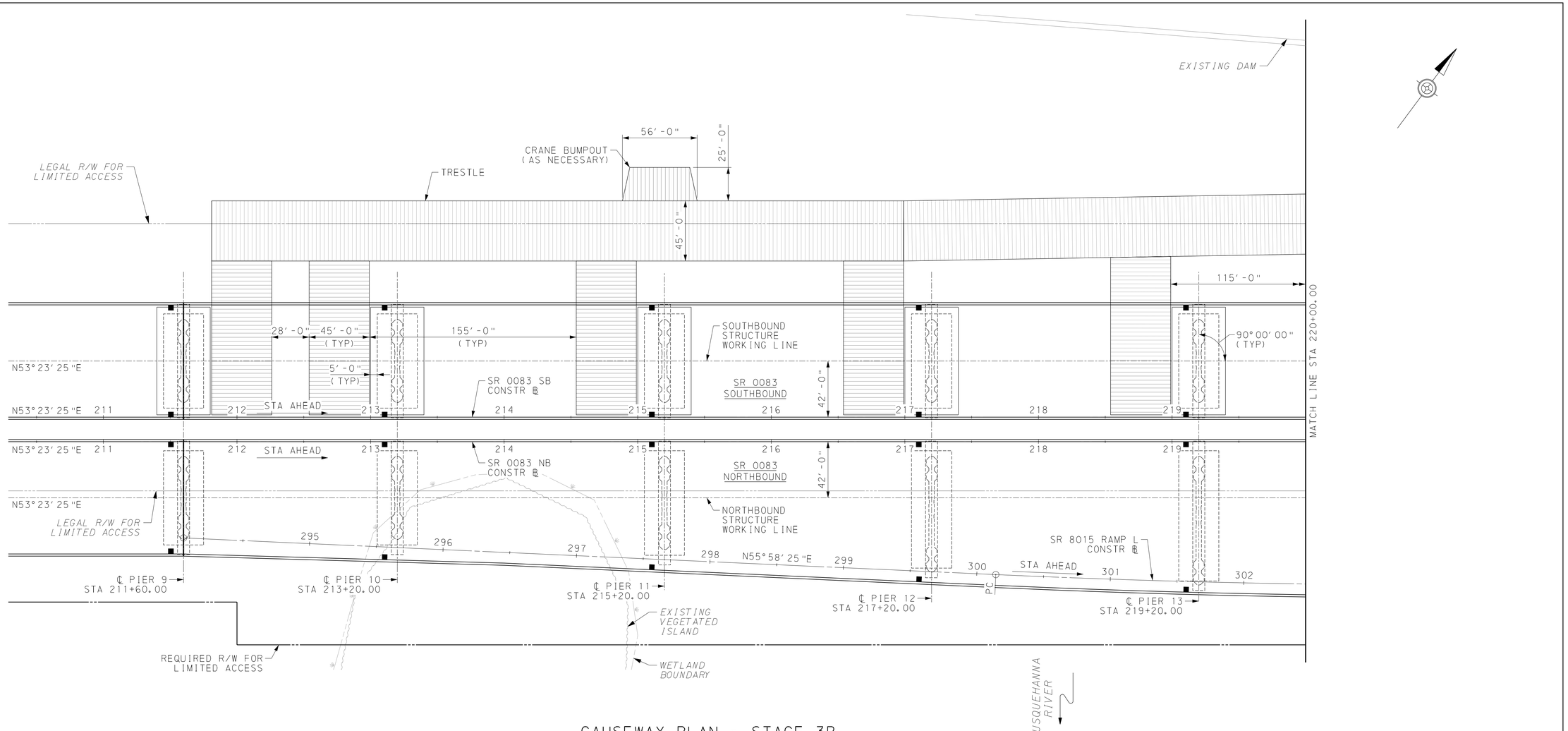


## CAUSEWAY PLAN - STAGE 3B

20 0 20 40 FEET

1"=40'

## CONSTRUCTION SEQUENCE NOTES:

STAGE 3B

1. PLACE TEMPORARY EXCAVATION SUPPORT AND PROTECTION SYSTEM AND COFFERDAMS. EXCAVATE AS NECESSARY FOR FOUNDATION PLACEMENT.
2. PLACE EASTERN PORTION OF SOUTHBOUND SUBSTRUCTURE.
3. PLACE EASTERN PORTION OF SOUTHBOUND SUPERSTRUCTURE.

| Mark | Description | By | Chk'd | Recm'd | Date |
|---|---|---|---|---|---|
| REVISIONS | | | | | |

SR 0083 PREVIOUSLY KNOWN AS LR 767
BMS STR ID: 22-0083-0414-2378 (NB)
22-0083-0415-2340 (SB)

MPMS/ECMS PROJ: 113754
BRKEY: 69031 (NB)
69085 (SB)

HNTB

COMMONWEALTH OF PENNSYLVANIA
DEPARTMENT OF TRANSPORTATION

CONCEPTUAL

# CUMBERLAND AND DAUPHIN COUNTIES
# SR 0083 SECTION 094
SR 0083 NB SEG 0414 OFFSET 2378
SR 0083 SB SEG 0415 OFFSET 2340
SR 0083 NB STA 197+11.81 SR 0083 SB STA 196+77.25
OVER LOWTHER ST, NSRC & SUSQUEHANNA RIVER
19-SPAN CONTINUOUS STEEL MULTI-GIRDER BRIDGE
TYPE, SIZE & LOCATION
## STAGING PLAN - 8

PREPARED BY:
HNTB CORPORATION
4507 NORTH FRONT STREET
SUITE 300
HARRISBURG, PA 17110

RECOMMENDED _____

SHEET 14 OF 28

S-40918 (NB)
S-40966 (SB)

| DES: MKB | DES CKD: EMG | DWG: MKB | DWG CKD: EMG |
|---|---|---|---|

10/2/2023
FILENAME: 43377-s-br-stg26b.dgn

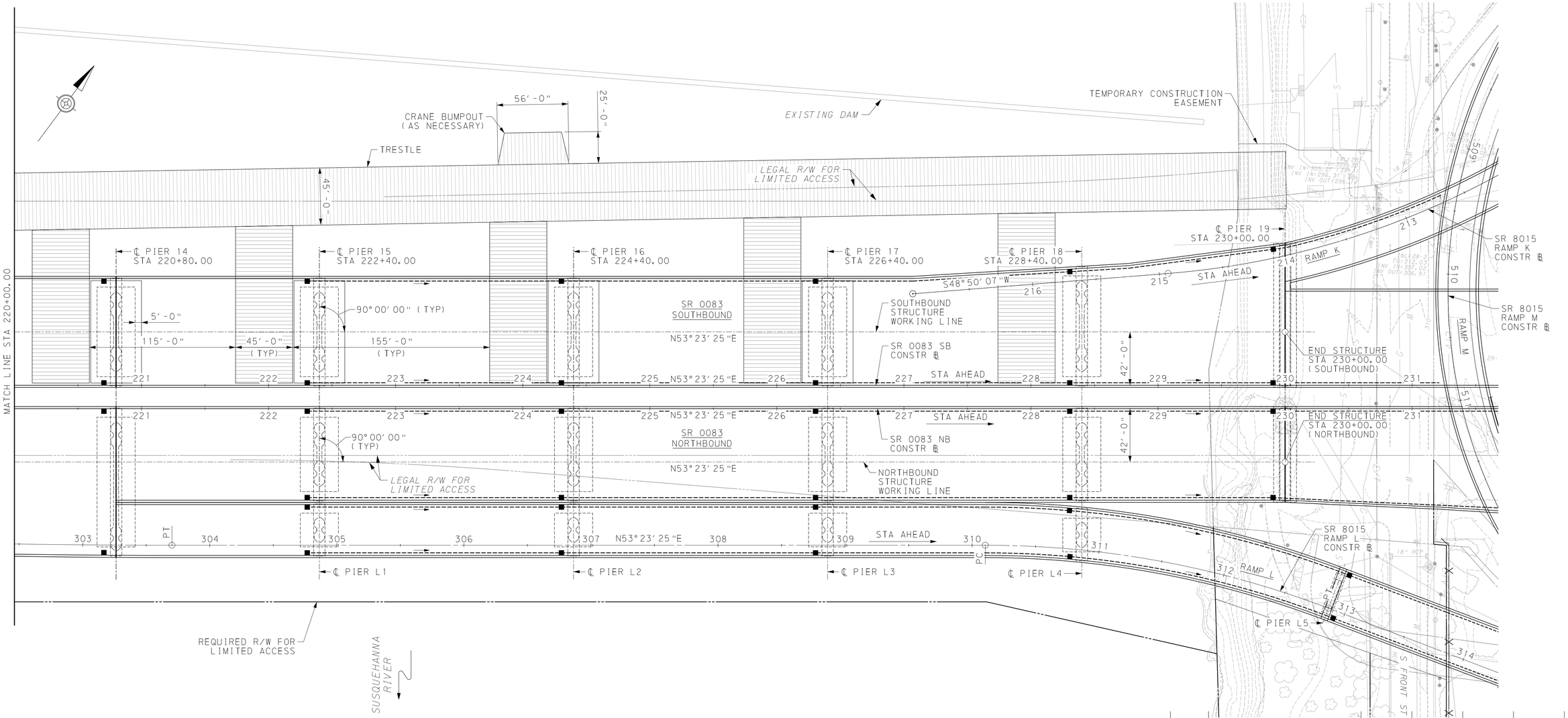


## CAUSEWAY PLAN - STAGE 3B

20 0 20 40 FEET

1"=40'

| Mark | Description | By | Chk'd | Recm'd | Date |
|---|---|---|---|---|---|
| REVISIONS | | | | | |

SR 0083 PREVIOUSLY KNOWN AS LR 767
BMS STR ID: 22-0083-0414-2378 (NB)
22-0083-0415-2340 (SB)

MPMS/ECMS PROJ: 113754
BRKEY: 69031 (NB)
69085 (SB)

HNTB

COMMONWEALTH OF PENNSYLVANIA
DEPARTMENT OF TRANSPORTATION

CONCEPTUAL

CUMBERLAND AND DAUPHIN COUNTIES
SR 0083 SECTION 094
SR 0083 NB SEG 0414 OFFSET 2378
SR 0083 SB SEG 0415 OFFSET 2340
SR 0083 NB STA 197+11.81 SR 0083 SB STA 196+77.25
OVER LOWTHER ST, NSRC & SUSQUEHANNA RIVER
19-SPAN CONTINUOUS STEEL MULTI-GIRDER BRIDGE
TYPE, SIZE & LOCATION
STAGING PLAN - 9

REFERENCES: STAGE 3B NOTES

SHEETS: 14

PREPARED BY:
HNTB CORPORATION
4507 NORTH FRONT STREET
SUITE 300
HARRISBURG, PA 17110

RECOMMENDED _____

SHEET 15 OF 28

S-40918 (NB)
S-40966 (SB)

10/2/2023
FILENAME: 43377-s-br-stg27b.dgn

| DES: MKB | DES CKD: EMG | DWG: MKB | DWG CKD: EMG |
|---|---|---|---|

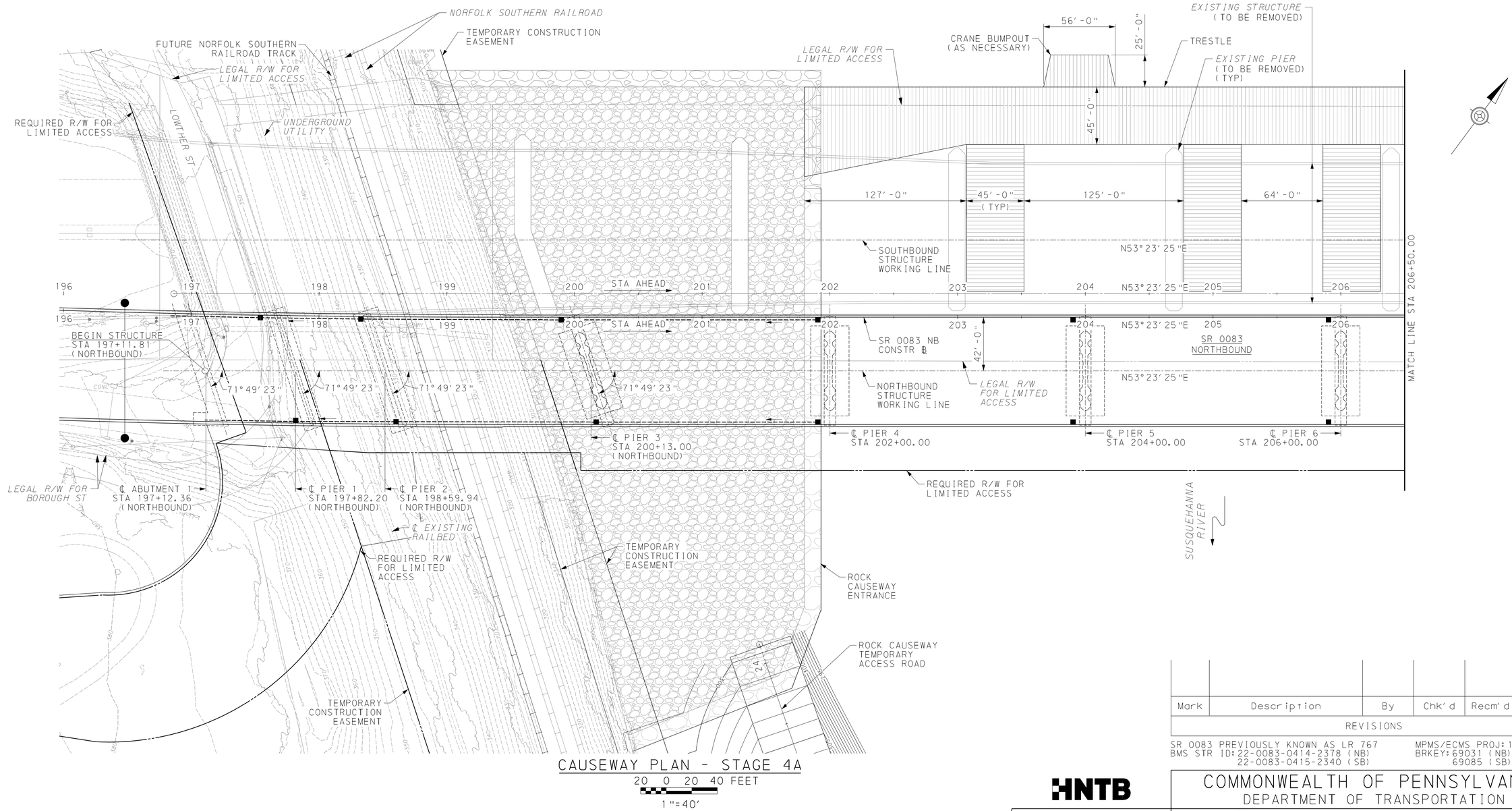


CAUSEWAY PLAN - STAGE 4A

20 0 20 40 FEET

1"=40'

## CONSTRUCTION SEQUENCE NOTES:

STAGE 4A

1. REMOVE THE EASTERN PORTION OF THE SOUTHBOUND TRESTLE, TEMPORARY EXCAVATION SUPPORT AND PROTECTION SYSTEM AND COFFERDAMS.
2. CONSTRUCT TRESTLE TO WESTERN PORTION OF THE SOUTHBOUND STRUCTURE.
3. DEMO REMAINING WESTERN PORTION OF EXISTING NORTHBOUND AND SOUTHBOUND STRUCTURE.

| Mark | Description | By | Chk'd | Recm'd | Date |
|---|---|---|---|---|---|
| REVISIONS | | | | | |

SR 0083 PREVIOUSLY KNOWN AS LR 767
BMS STR ID: 22-0083-0414-2378 (NB) 22-0083-0415-2340 (SB)
MPMS/ECMS PROJ: 113754
BRKEY: 69031 (NB) 69085 (SB)

HNTB

COMMONWEALTH OF PENNSYLVANIA
DEPARTMENT OF TRANSPORTATION

CONCEPTUAL

CUMBERLAND AND DAUPHIN COUNTIES
SR 0083 SECTION 094
SR 0083 NB SEG 0414 OFFSET 2378
SR 0083 SB SEG 0415 OFFSET 2340
SR 0083 NB STA 197+11.81 SR 0083 SB STA 196+77.25
OVER LOWTHER ST, NSRC & SUSQUEHANNA RIVER
19-SPAN CONTINUOUS STEEL MULTI-GIRDER BRIDGE
TYPE, SIZE & LOCATION
STAGING PLAN - 10

PREPARED BY:
HNTB CORPORATION
4507 NORTH FRONT STREET
SUITE 300
HARRISBURG, PA 17110

RECOMMENDED _____

SHEET 16 OF 28

S-40918 (NB)
S-40966 (SB)

| DES: MKB | DES CKD: EMG | DWG: MKB | DWG CKD: EMG |
|---|---|---|---|

10/2/2023
FILENAME: 43377-s-br-stg28a.dgn

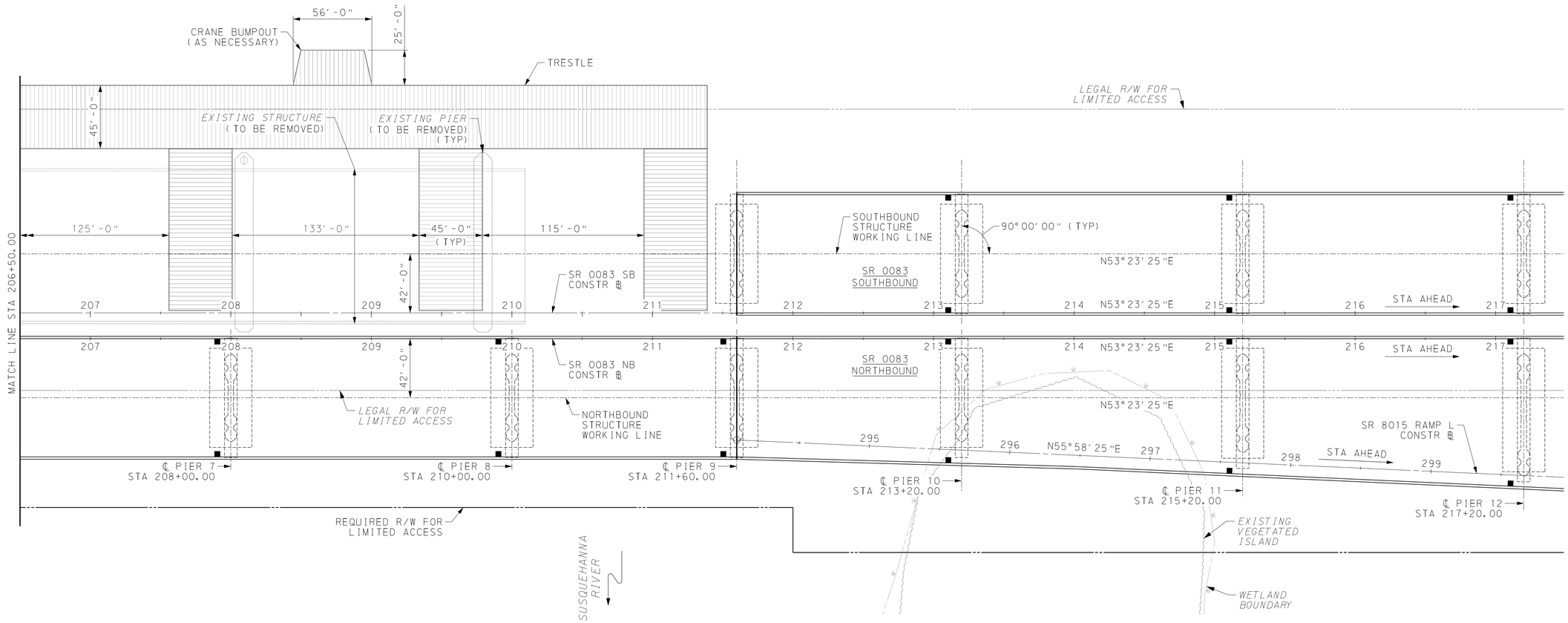


## CAUSEWAY PLAN - STAGE 4A

20 0 20 40 FEET

1"=40'

| Mark | Description | By | Chk'd | Recm'd | Date |
|---|---|---|---|---|---|
| REVISIONS | | | | | |

SR 0083 PREVIOUSLY KNOWN AS LR 767
BMS STR ID: 22-0083-0414-2378 (NB)
22-0083-0415-2340 (SB)

MPMS/ECMS PROJ: 113754
BRKEY: 69031 (NB)
69085 (SB)

HNTB

# COMMONWEALTH OF PENNSYLVANIA
DEPARTMENT OF TRANSPORTATION

CONCEPTUAL

# CUMBERLAND AND DAUPHIN COUNTIES
# SR 0083 SECTION 094
SR 0083 NB SEG 0414 OFFSET 2378
SR 0083 SB SEG 0415 OFFSET 2340
SR 0083 NB STA 197+11.81 SR 0083 SB STA 196+77.25
OVER LOWTHER ST, NSRC & SUSQUEHANNA RIVER
19-SPAN CONTINUOUS STEEL MULTI-GIRDER BRIDGE
TYPE, SIZE & LOCATION
## STAGING PLAN - 11

REFERENCES: STAGE 4A NOTES

SHEETS: 16

PREPARED BY:
HNTB CORPORATION
4507 NORTH FRONT STREET
SUITE 300
HARRISBURG, PA 17110

RECOMMENDED _____

SHEET 17 OF 28

S-40918 (NB)
S-40966 (SB)

10/2/2023
FILENAME: 43377-s-br-stg29a.dgn

| DES: MKB | DES CKD: EMG | DWG: MKB | DWG CKD: EMG |
|---|---|---|---|

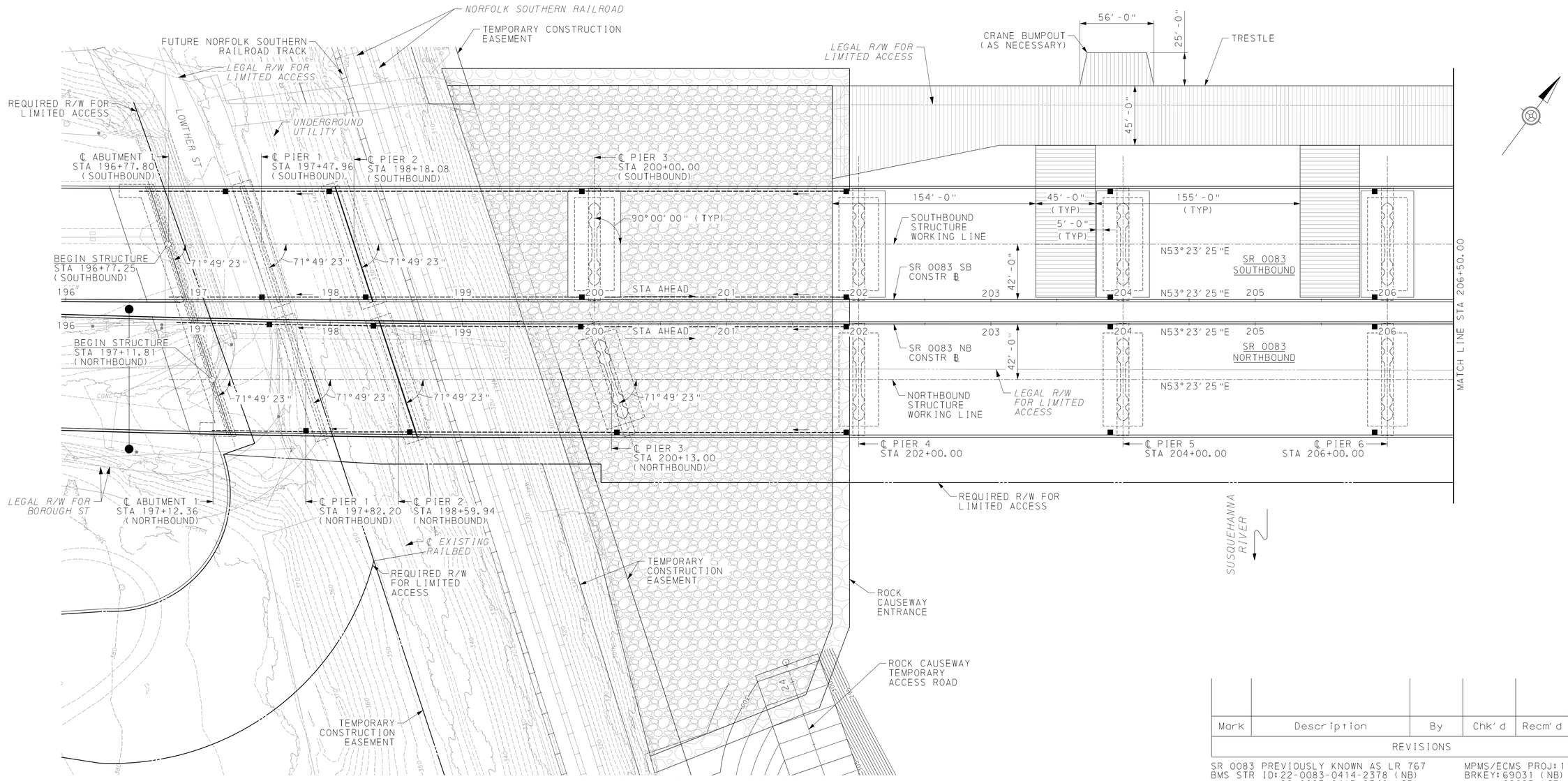


CAUSEWAY PLAN - STAGE 4B

20 0 20 40 FEET

1"=40'

## CONSTRUCTION SEQUENCE NOTES:

STAGE 4B

1. PLACE TEMPORARY EXCAVATION SUPPORT AND PROTECTION SYSTEM AND COFFERDAMS. EXCAVATE AS NECESSARY FOR FOUNDATION PLACEMENT.
2. PLACE WESTERN PORTION OF SOUTHBOUND SUBSTRUCTURE.
3. PLACE WESTERN PORTION OF SOUTHBOUND SUPERSTRUCTURE.
4. SHIFT SOUTHBOUND TRAFFIC FROM NORTHBOUND STRUCTURE TO SOUTHBOUND STRUCTURE.
5. REMOVE TEMPORARY EXCAVATION SUPPORT AND PROTECTION SYSTEM, COFFERDAMS, ROCK CAUSEWAY ENTRANCE, AND ACCESS ROADS.

| Mark | Description | By | Chk'd | Recm'd | Date |
|---|---|---|---|---|---|
| REVISIONS | | | | | |

SR 0083 PREVIOUSLY KNOWN AS LR 767
BMS STR ID: 22-0083-0414-2378 (NB) 22-0083-0415-2340 (SB)
MPMS/ECMS PROJ: 113754
BRKEY: 69031 (NB) 69085 (SB)

HNTB

COMMONWEALTH OF PENNSYLVANIA
DEPARTMENT OF TRANSPORTATION

CONCEPTUAL

CUMBERLAND AND DAUPHIN COUNTIES
SR 0083 SECTION 094
SR 0083 NB SEG 0414 OFFSET 2378
SR 0083 SB SEG 0415 OFFSET 2340
SR 0083 NB STA 197+11.81 SR 0083 SB STA 196+77.25
OVER LOWTHER ST, NSRC & SUSQUEHANNA RIVER
19-SPAN CONTINUOUS STEEL MULTI-GIRDER BRIDGE
TYPE, SIZE & LOCATION
STAGING PLAN - 12

PREPARED BY:
HNTB CORPORATION
4507 NORTH FRONT STREET
SUITE 300
HARRISBURG, PA 17110

RECOMMENDED _____

SHEET 18 OF 28

S-40918 (NB)
S-40966 (SB)

| DES: MKB | DES CKD: EMG | DWG: MKB | DWG CKD: EMG |
|---|---|---|---|

10/2/2023
FILENAME: 43377-s-br-stg28b.dgn

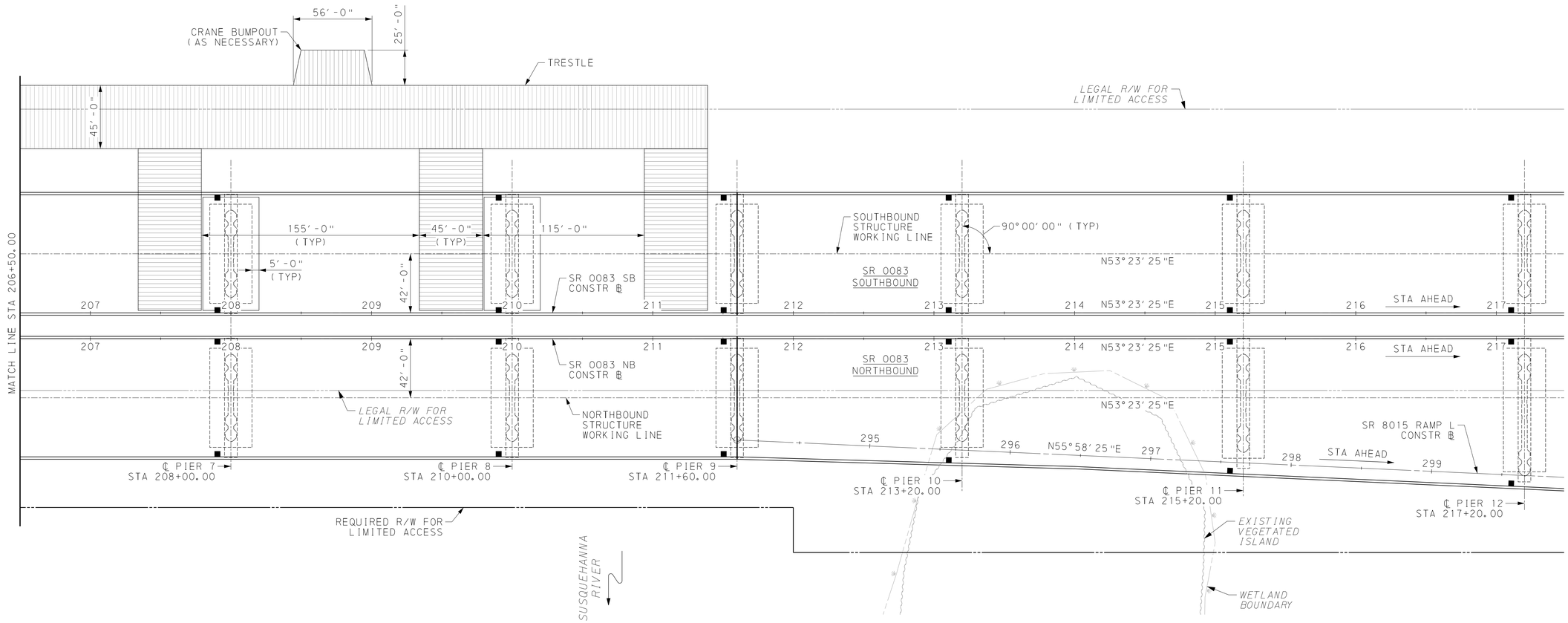


## CAUSEWAY PLAN - STAGE 4B

20 0 20 40 FEET

1"=40'

| Mark | Description | By | Chk'd | Recm'd | Date |
|---|---|---|---|---|---|
| REVISIONS | | | | | |

SR 0083 PREVIOUSLY KNOWN AS LR 767
BMS STR ID: 22-0083-0414-2378 (NB)
22-0083-0415-2340 (SB)

MPMS/ECMS PROJ: 113754
BRKEY: 69031 (NB)
69085 (SB)

HNTB

# COMMONWEALTH OF PENNSYLVANIA
DEPARTMENT OF TRANSPORTATION

CONCEPTUAL

# CUMBERLAND AND DAUPHIN COUNTIES
# SR 0083 SECTION 094
SR 0083 NB SEG 0414 OFFSET 2378
SR 0083 SB SEG 0415 OFFSET 2340
SR 0083 NB STA 197+11.81 SR 0083 SB STA 196+77.25
OVER LOWTHER ST, NSRC & SUSQUEHANNA RIVER
19-SPAN CONTINUOUS STEEL MULTI-GIRDER BRIDGE
TYPE, SIZE & LOCATION
## STAGING PLAN - 13

REFERENCES: STAGE 4B NOTES

SHEETS: 18

PREPARED BY:
HNTB CORPORATION
4507 NORTH FRONT STREET
SUITE 300
HARRISBURG, PA 17110

RECOMMENDED _____

SHEET 19 OF 28

S-40918 (NB)
S-40966 (SB)

10/2/2023
FILENAME: 43377-s-br-stg29b.dgn

| DES: MKB | DES CKD: EMG | DWG: MKB | DWG CKD: EMG |
|---|---|---|---|

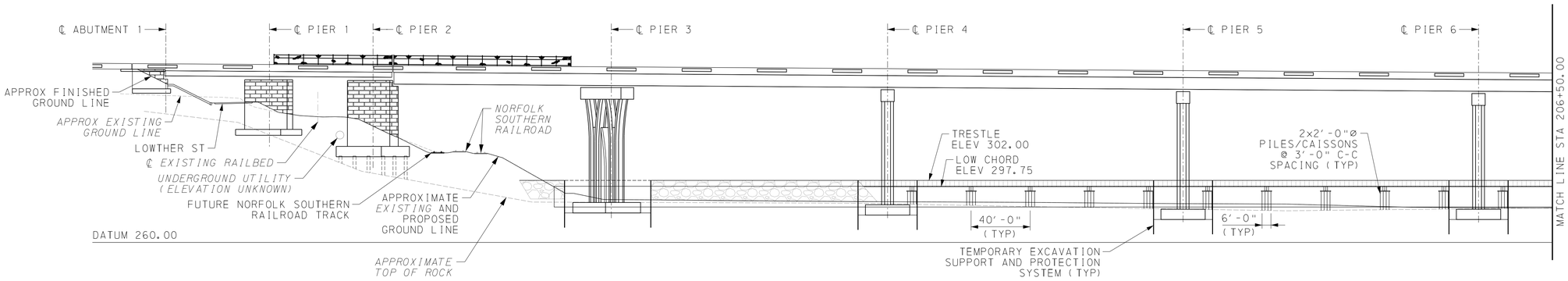


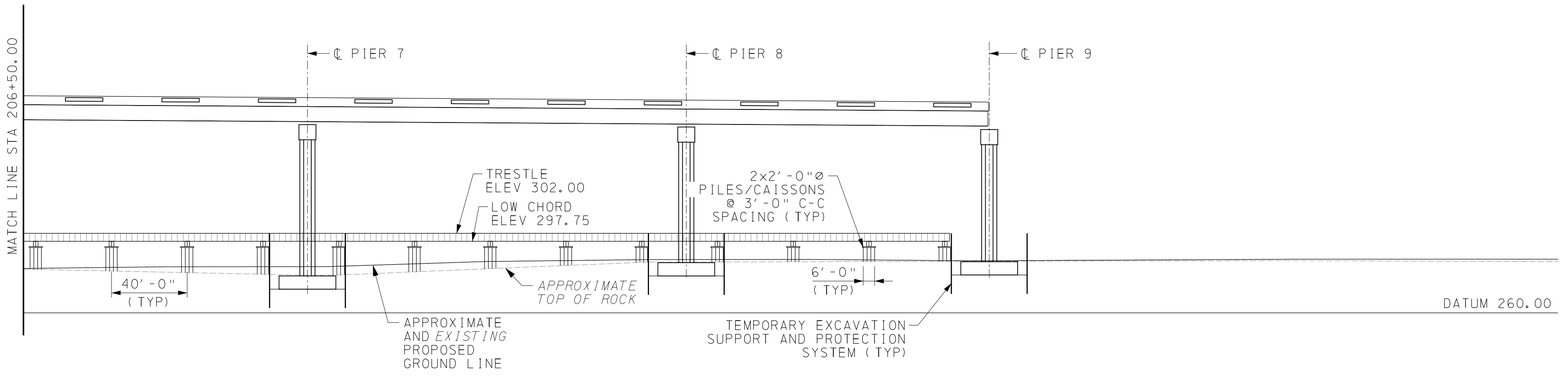


## CAUSEWAY ELEVATION - STAGE 1

20 0 20 40 FEET

1"=40'

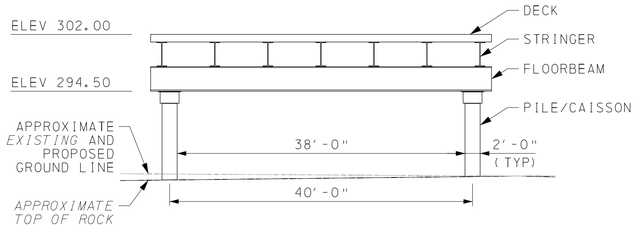


## TRESTLE FINGER TYPICAL SECTION

5 0 5 10 FEET

1"=10'

| Mark | Description | By | Chk'd | Recm'd | Date |
|---|---|---|---|---|---|
| REVISIONS | | | | | |

SR 0083 PREVIOUSLY KNOWN AS LR 767
BMS STR ID: 22-0083-0414-2378 (NB)
22-0083-0415-2340 (SB)

MPMS/ECMS PROJ: 113754
BRKEY: 69031 (NB)
69085 (SB)

HNTB

# COMMONWEALTH OF PENNSYLVANIA
DEPARTMENT OF TRANSPORTATION

CONCEPTUAL

# CUMBERLAND AND DAUPHIN COUNTIES
## SR 0083 SECTION 094
SR 0083 NB SEG 0414 OFFSET 2378
SR 0083 SB SEG 0415 OFFSET 2340
SR 0083 NB STA 197+11.81 SR 0083 SB STA 196+77.25
OVER LOWTHER ST, NSRC & SUSQUEHANNA RIVER
19-SPAN CONTINUOUS STEEL MULTI-GIRDER BRIDGE
TYPE, SIZE & LOCATION
## STAGING ELEVATION - 1

PREPARED BY:
HNTB CORPORATION
4507 NORTH FRONT STREET
SUITE 300
HARRISBURG, PA 17110

RECOMMENDED _____

SHEET 20 OF 28

S-40918 (NB)
S-40966 (SB)

DES: MKB | DES CKD: EMG | DWG: MKB | DWG CKD: EMG

10/2/2023
FILENAME: 43377-s-br-stg210.dgn

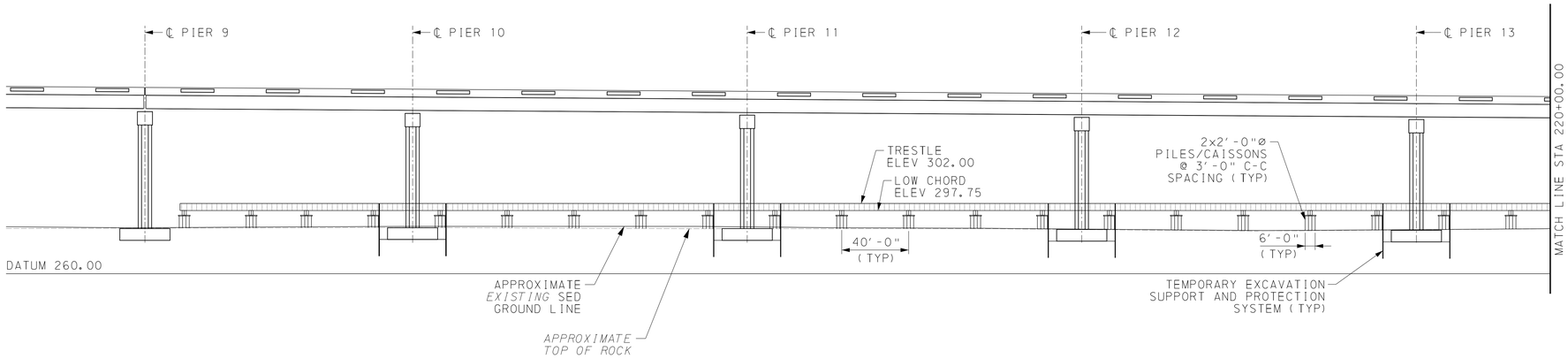


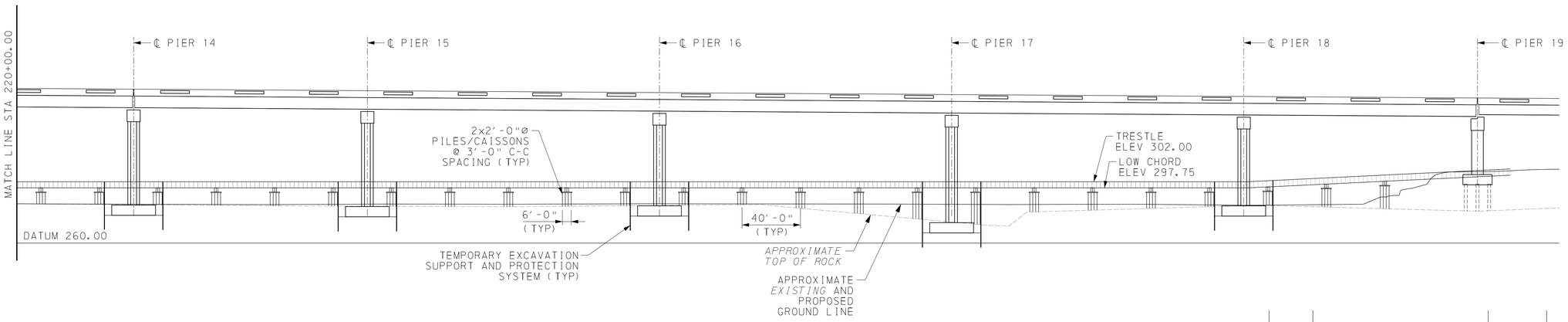


CAUSEWAY ELEVATION - STAGE 2

20 0 20 40 FEET

1"=40'

| Mark | Description | By | Chk'd | Recm'd | Date |
|---|---|---|---|---|---|
| REVISIONS | | | | | |

SR 0083 PREVIOUSLY KNOWN AS LR 767
BMS STR ID: 22-0083-0414-2378 (NB)
22-0083-0415-2340 (SB)

MPMS/ECMS PROJ: 113754
BRKEY: 69031 (NB)
69085 (SB)

HNTB

COMMONWEALTH OF PENNSYLVANIA
DEPARTMENT OF TRANSPORTATION

CONCEPTUAL

CUMBERLAND AND DAUPHIN COUNTIES
SR 0083 SECTION 094
SR 0083 NB SEG 0414 OFFSET 2378
SR 0083 SB SEG 0415 OFFSET 2340
SR 0083 NB STA 197+11.81 SR 0083 SB STA 196+77.25
OVER LOWTHER ST, NSRC & SUSQUEHANNA RIVER
19-SPAN CONTINUOUS STEEL MULTI-GIRDER BRIDGE
TYPE, SIZE & LOCATION
STAGING ELEVATION - 2

PREPARED BY:
HNTB CORPORATION
4507 NORTH FRONT STREET
SUITE 300
HARRISBURG, PA 17110

RECOMMENDED _____

SHEET 21 OF 28

S-40918 (NB)
S-40966 (SB)

10/2/2023
FILENAME: 43377-s-br-s1q211.dgn

| DES: MKB | DES CKD: EMG | DWG: MKB | DWG CKD: EMG |
|---|---|---|---|

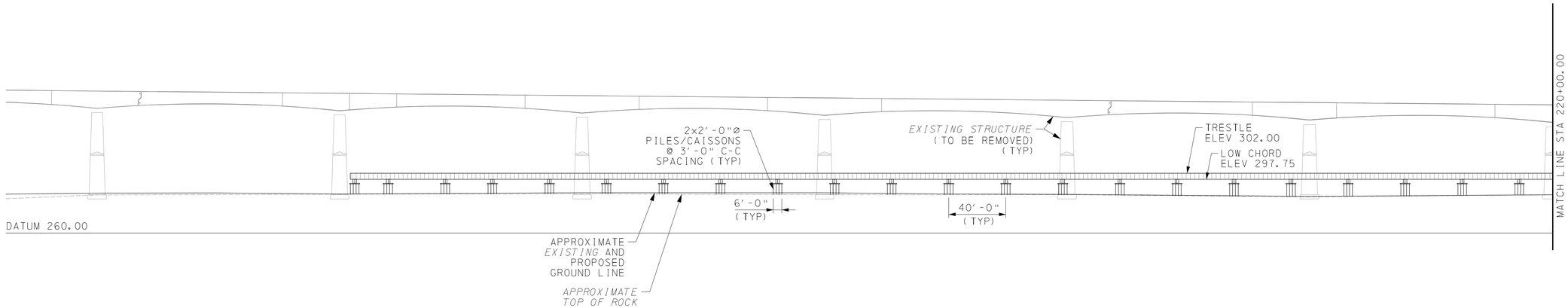


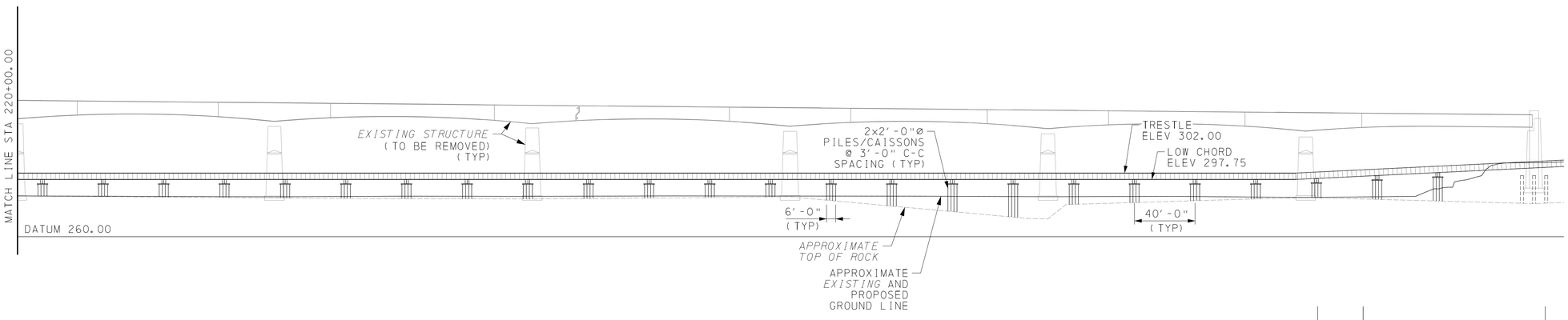


## CAUSEWAY ELEVATION - STAGE 3A

20 0 20 40 FEET

1"=40'

| Mark | Description | By | Chk'd | Recm'd | Date |
|---|---|---|---|---|---|
| REVISIONS | | | | | |

SR 0083 PREVIOUSLY KNOWN AS LR 767
BMS STR ID: 22-0083-0414-2378 (NB)
22-0083-0415-2340 (SB)

MPMS/ECMS PROJ: 113754
BRKEY: 69031 (NB)
69085 (SB)

HNTB

COMMONWEALTH OF PENNSYLVANIA
DEPARTMENT OF TRANSPORTATION

CONCEPTUAL

# CUMBERLAND AND DAUPHIN COUNTIES
# SR 0083 SECTION 094

SR 0083 NB SEG 0414 OFFSET 2378
SR 0083 SB SEG 0415 OFFSET 2340
SR 0083 NB STA 197+11.81 SR 0083 SB STA 196+77.25
OVER LOWTHER ST, NSRC & SUSQUEHANNA RIVER
19-SPAN CONTINUOUS STEEL MULTI-GIRDER BRIDGE
TYPE, SIZE & LOCATION

## STAGING ELEVATION - 3

PREPARED BY:
HNTB CORPORATION
4507 NORTH FRONT STREET
SUITE 300
HARRISBURG, PA 17110

RECOMMENDED _____

SHEET 22 OF 28

S-40918 (NB)
S-40966 (SB)

10/2/2023
FILENAME: 43377-s-br-stg212a.dgn

| DES: MKB | DES CKD: EMG | DWG: MKB | DWG CKD: EMG |
|---|---|---|---|

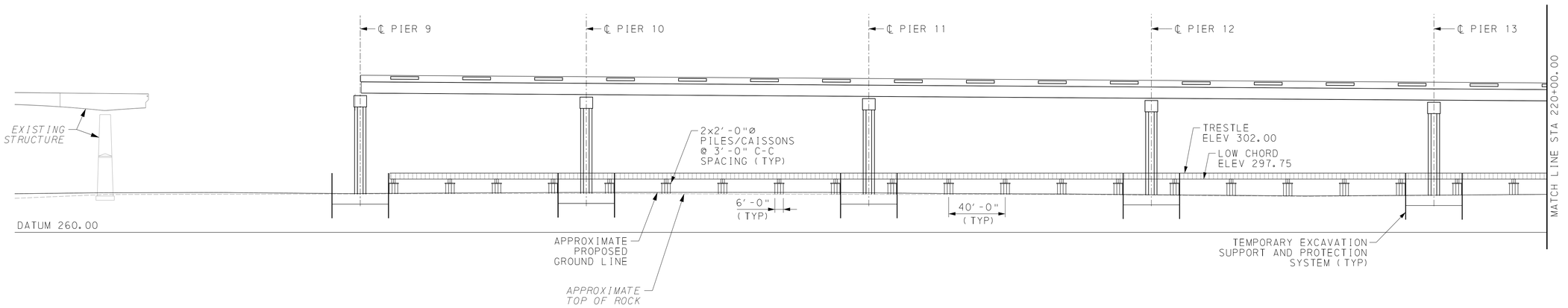


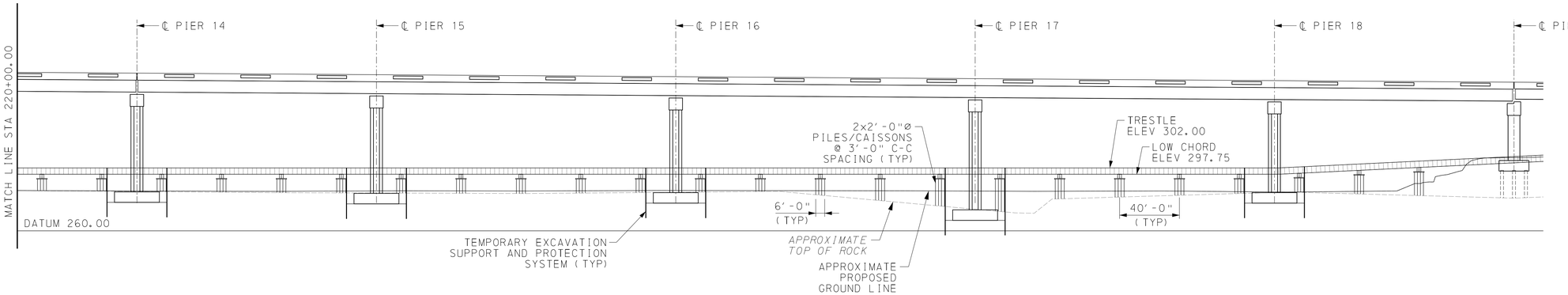


## CAUSEWAY ELEVATION - STAGE 3B

20 0 20 40 FEET

1"=40'

| Mark | Description | By | Chk'd | Recm'd | Date |
|---|---|---|---|---|---|
| REVISIONS | | | | | |

SR 0083 PREVIOUSLY KNOWN AS LR 767
BMS STR ID: 22-0083-0414-2378 (NB)
22-0083-0415-2340 (SB)
MPMS/ECMS PROJ: 113754
BRKEY: 69031 (NB)
69085 (SB)

HNTB

COMMONWEALTH OF PENNSYLVANIA
DEPARTMENT OF TRANSPORTATION

CONCEPTUAL

CUMBERLAND AND DAUPHIN COUNTIES
SR 0083 SECTION 094
SR 0083 NB SEG 0414 OFFSET 2378
SR 0083 SB SEG 0415 OFFSET 2340
SR 0083 NB STA 197+11.81 SR 0083 SB STA 196+77.25
OVER LOWTHER ST, NSRC & SUSQUEHANNA RIVER
19-SPAN CONTINUOUS STEEL MULTI-GIRDER BRIDGE
TYPE, SIZE & LOCATION
STAGING ELEVATION - 4

PREPARED BY:
HNTB CORPORATION
4507 NORTH FRONT STREET
SUITE 300
HARRISBURG, PA 17110

RECOMMENDED _____

SHEET 23 OF 28

S-40918 (NB)
S-40966 (SB)

| DES: MKB | DES CKD: EMG | DWG: MKB | DWG CKD: EMG |
|---|---|---|---|

10/2/2023
FILENAME: 43377-s-br-stg12b.dgn

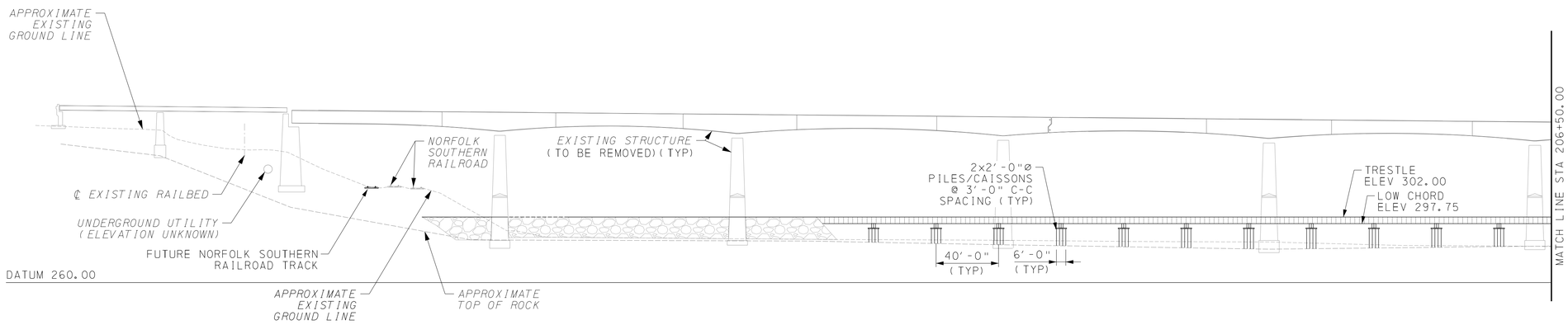


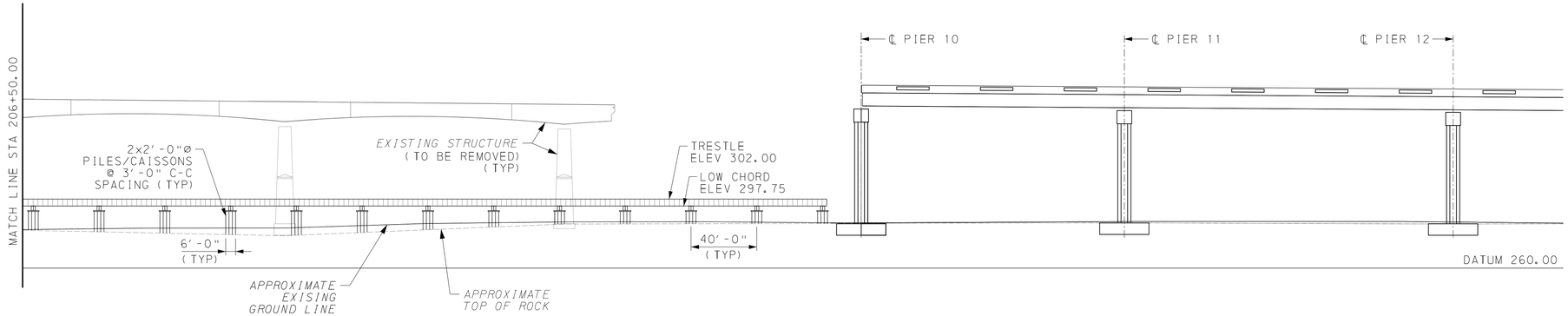


## CAUSEWAY ELEVATION - STAGE 4A

20 0 20 40 FEET

1"=40'

| Mark | Description | By | Chk'd | Recm'd | Date |
|---|---|---|---|---|---|
| REVISIONS | | | | | |

SR 0083 PREVIOUSLY KNOWN AS LR 767
BMS STR ID: 22-0083-0414-2378 (NB)
22-0083-0415-2340 (SB)
MPMS/ECMS PROJ: 113754
BRKEY: 69031 (NB)
69085 (SB)

HNTB

# COMMONWEALTH OF PENNSYLVANIA
DEPARTMENT OF TRANSPORTATION

CONCEPTUAL

# CUMBERLAND AND DAUPHIN COUNTIES
## SR 0083 SECTION 094
SR 0083 NB SEG 0414 OFFSET 2378
SR 0083 SB SEG 0415 OFFSET 2340
SR 0083 NB STA 197+11.81 SR 0083 SB STA 196+77.25
OVER LOWTHER ST, NSRC & SUSQUEHANNA RIVER
19-SPAN CONTINUOUS STEEL MULTI-GIRDER BRIDGE
TYPE, SIZE & LOCATION
## STAGING ELEVATION - 5

PREPARED BY:
HNTB CORPORATION
4507 NORTH FRONT STREET
SUITE 300
HARRISBURG, PA 17110

RECOMMENDED _____

SHEET 24 OF 28

S-40918 (NB)
S-40966 (SB)

| DES: MKB | DES CKD: EMG | DWG: MKB | DWG CKD: EMG |
|---|---|---|---|

10/2/2023
FILENAME: 43377-s-br-sg213a.dgn

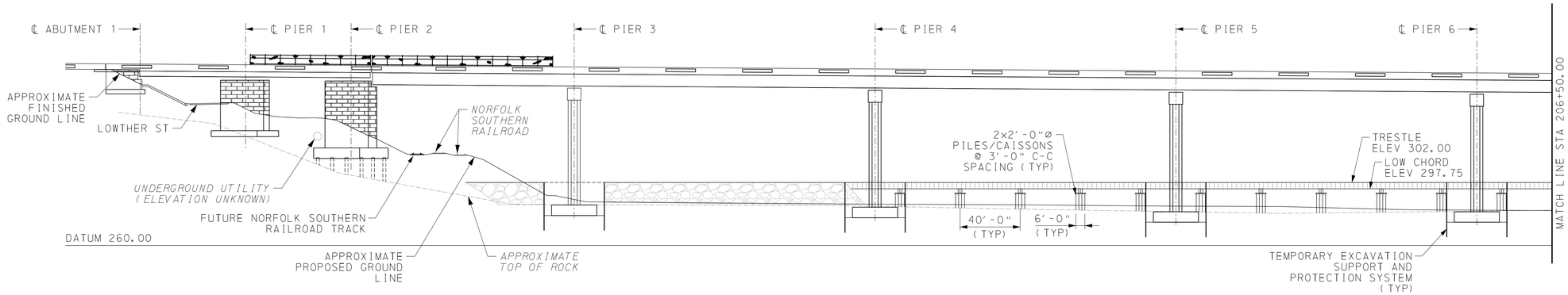


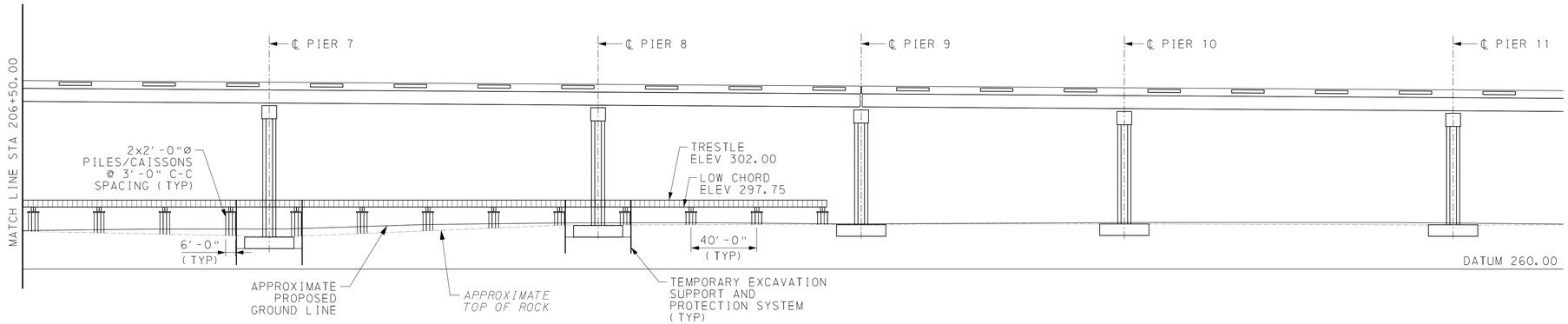


## CAUSEWAY ELEVATION - STAGE 4B

20 0 20 40 FEET

1"=40'

| Mark | Description | By | Chk'd | Recm'd | Date |
|---|---|---|---|---|---|
| REVISIONS | | | | | |

SR 0083 PREVIOUSLY KNOWN AS LR 767
BMS STR ID: 22-0083-0414-2378 (NB)
22-0083-0415-2340 (SB)
MPMS/ECMS PROJ: 113754
BRKEY: 69031 (NB)
69085 (SB)

HNTB

COMMONWEALTH OF PENNSYLVANIA
DEPARTMENT OF TRANSPORTATION

CONCEPTUAL

CUMBERLAND AND DAUPHIN COUNTIES
SR 0083 SECTION 094
SR 0083 NB SEG 0414 OFFSET 2378
SR 0083 SB SEG 0415 OFFSET 2340
SR 0083 NB STA 197+11.81 SR 0083 SB STA 196+77.25
OVER LOWTHER ST, NSRC & SUSQUEHANNA RIVER
19-SPAN CONTINUOUS STEEL MULTI-GIRDER BRIDGE
TYPE, SIZE & LOCATION
STAGING ELEVATION - 6

PREPARED BY:
HNTB CORPORATION
4507 NORTH FRONT STREET
SUITE 300
HARRISBURG, PA 17110

RECOMMENDED _____

SHEET 25 OF 28

S-40918 (NB)
S-40966 (SB)

| DES: MKB | DES CKD: EMG | DWG: MKB | DWG CKD: EMG |
|---|---|---|---|

10/2/2023
FILENAME: 43377-s-br-stg213b.dgn

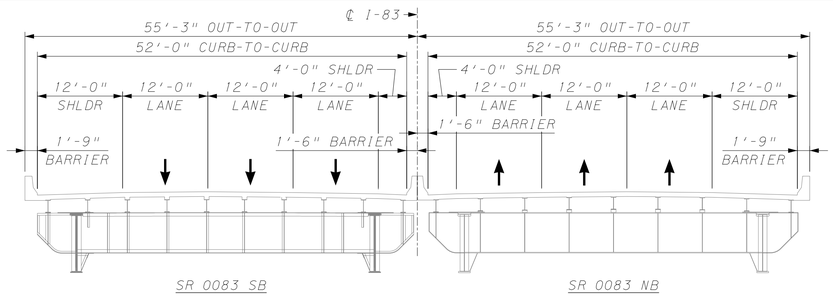


## EXISTING TYPICAL SECTION

20 4 8 12 FEET

3/32"=1'-0"

(SPAN 10 SHOWN)

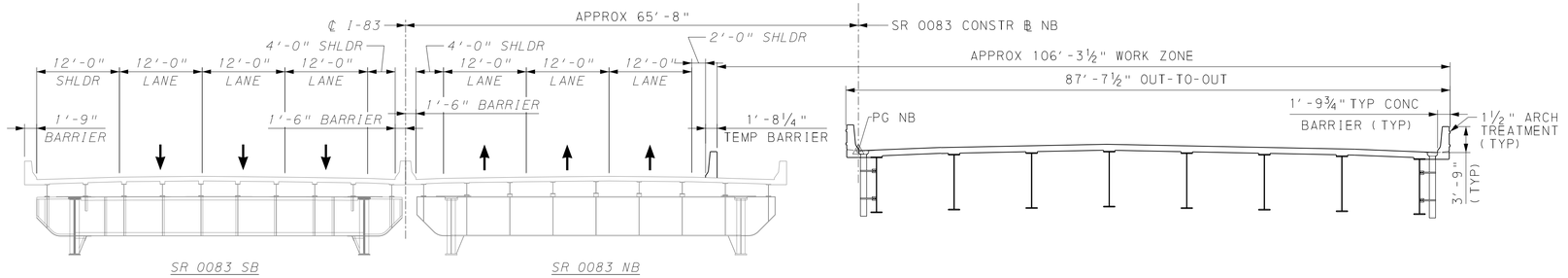


## TYPICAL SECTION - STAGES 1 & 2

20 4 8 12 FEET

3/32"=1'-0"

(SPAN 8 SHOWN, SPANS 3-12 SIMILAR)

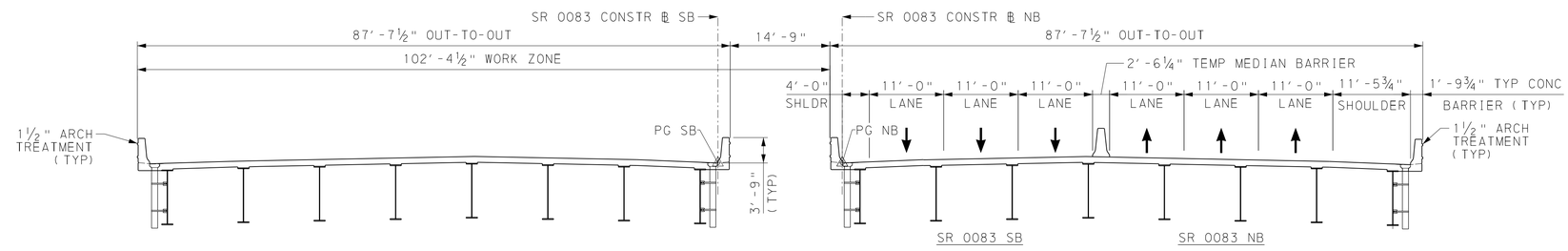


## TYPICAL SECTION - STAGES 3 & 4

20 4 8 12 FEET

3/32"=1'-0"

(SPAN 8 SHOWN, SPANS 3-12 SIMILAR)

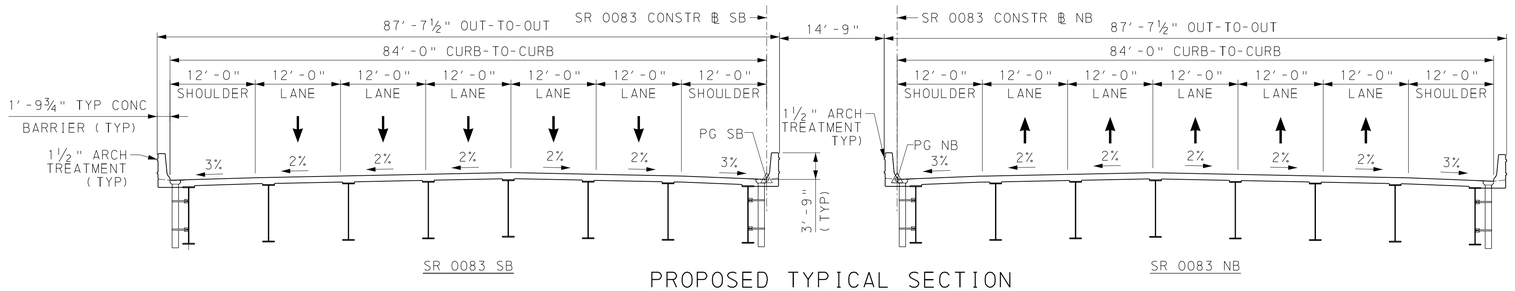


## PROPOSED TYPICAL SECTION

20 4 8 12 FEET

3/32"=1'-0"

(SPAN 8 SHOWN, SPANS 3-12 SIMILAR)

| Mark | Description | By | Chk'd | Recm'd | Date |
|---|---|---|---|---|---|
| REVISIONS | | | | | |

SR 0083 PREVIOUSLY KNOWN AS LR 767
BMS STR ID: 22-0083-0414-2378 (NB)
22-0083-0415-2340 (SB)

MPMS/ECMS PROJ: 113754
BRKEY: 69031 (NB)
69085 (SB)

HNTB

# COMMONWEALTH OF PENNSYLVANIA
DEPARTMENT OF TRANSPORTATION

CONCEPTUAL

# CUMBERLAND AND DAUPHIN COUNTIES
# SR 0083 SECTION 094
SR 0083 NB SEG 0414 OFFSET 2378
SR 0083 SB SEG 0415 OFFSET 2340
SR 0083 NB STA 197+11.81 SR 0083 SB STA 196+77.25
OVER LOWTHER ST, NSRC & SUSQUEHANNA RIVER
19-SPAN CONTINUOUS STEEL MULTI-GIRDER BRIDGE
TYPE, SIZE & LOCATION
# STAGING TYPICAL SECTIONS - 1

PREPARED BY:
HNTB CORPORATION
4507 NORTH FRONT STREET
SUITE 300
HARRISBURG, PA 17110

RECOMMENDED _____

_____

SHEET 26 OF 28

S-40918 (NB)
S-40966 (SB)

10/2/2023
FILENAME: 43377-s-br-stg214.dgn

| DES: MKB | DES CKD: EMG | DWG: MKB | DWG CKD: EMG |
|---|---|---|---|

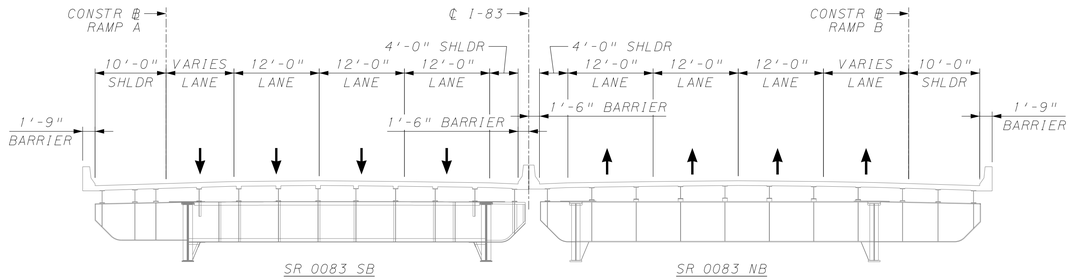


## EXISTING TYPICAL SECTION

2 0 4 8 12 FEET

3/32"=1'-0"

(SPAN 16 SHOWN)

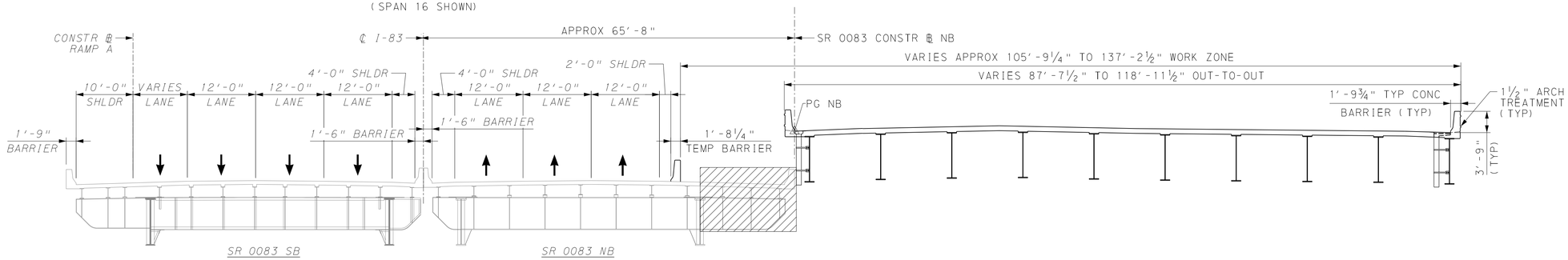


## TYPICAL SECTION - STAGES 1 & 2

2 0 4 8 12 FEET

3/32"=1'-0"

(SPAN 14 SHOWN, SPANS 1-2, 13-19 SIMILAR)

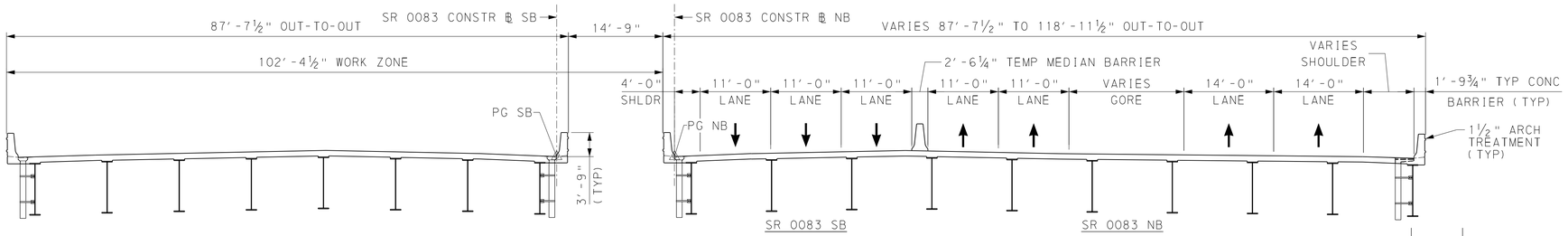


## TYPICAL SECTION - STAGES 3 & 4

2 0 4 8 12 FEET

3/32"=1'-0"

(SPAN 14 SHOWN, SPANS 1-2, 13-19 SIMILAR)

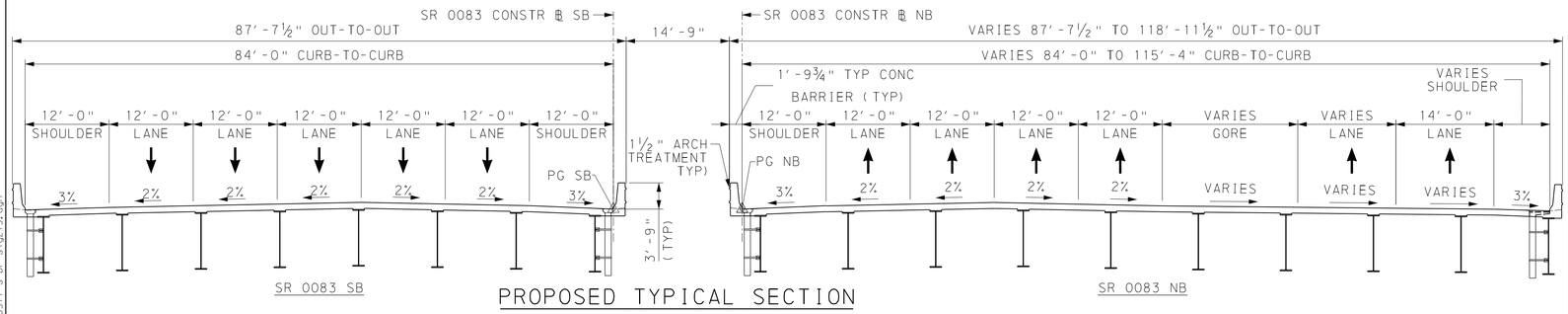


## PROPOSED TYPICAL SECTION

2 0 4 8 12 FEET

3/32"=1'-0"

(SPAN 14 SHOWN, SPANS 1-2, 13-19 SIMILAR)

LEGEND

▨ REMOVAL LIMITS

| Mark | Description | By | Chk'd | Recm'd | Date |
|---|---|---|---|---|---|
| REVISIONS | | | | | |

SR 0083 PREVIOUSLY KNOWN AS LR 767
BMS STR ID: 22-0083-0414-2378 (NB)
22-0083-0415-2340 (SB)

MPMS/ECMS PROJ: 113754
BRKEY: 69031 (NB)
69085 (SB)

HNTB

CONCEPTUAL

# COMMONWEALTH OF PENNSYLVANIA
DEPARTMENT OF TRANSPORTATION

# CUMBERLAND AND DAUPHIN COUNTIES
# SR 0083 SECTION 094
SR 0083 NB SEG 0414 OFFSET 2378
SR 0083 SB SEG 0415 OFFSET 2340
SR 0083 NB STA 197+11.81 SR 0083 SB STA 196+77.25
OVER LOWTHER ST, NSRC & SUSQUEHANNA RIVER
19-SPAN CONTINUOUS STEEL MULTI-GIRDER BRIDGE
TYPE, SIZE & LOCATION
# STAGING TYPICAL SECTIONS - 2

PREPARED BY:
HNTB CORPORATION
4507 NORTH FRONT STREET
SUITE 300
HARRISBURG, PA 17110

RECOMMENDED _____

_____

SHEET 27 OF 28

S-40918 (NB)
S-40966 (SB)

10/2/2023
FILENAME: 43377-s-br-stg215.dgn

| DES: MKB | DES CKD: EMG | DWG: MKB | DWG CKD: EMG |
|---|---|---|---|

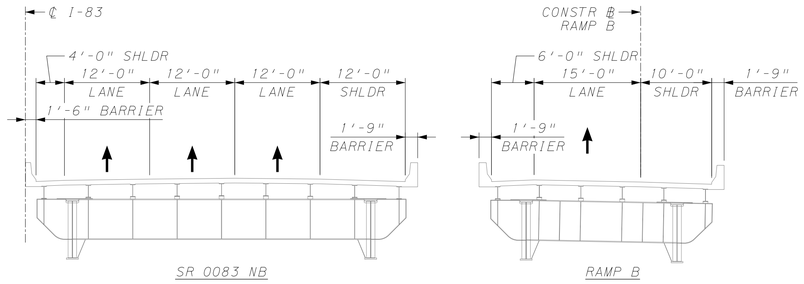


## EXISTING TYPICAL SECTION

2 0 4 8 12 FEET

3/32 "= 1' - 0"

( SPAN 20 SHOWN)

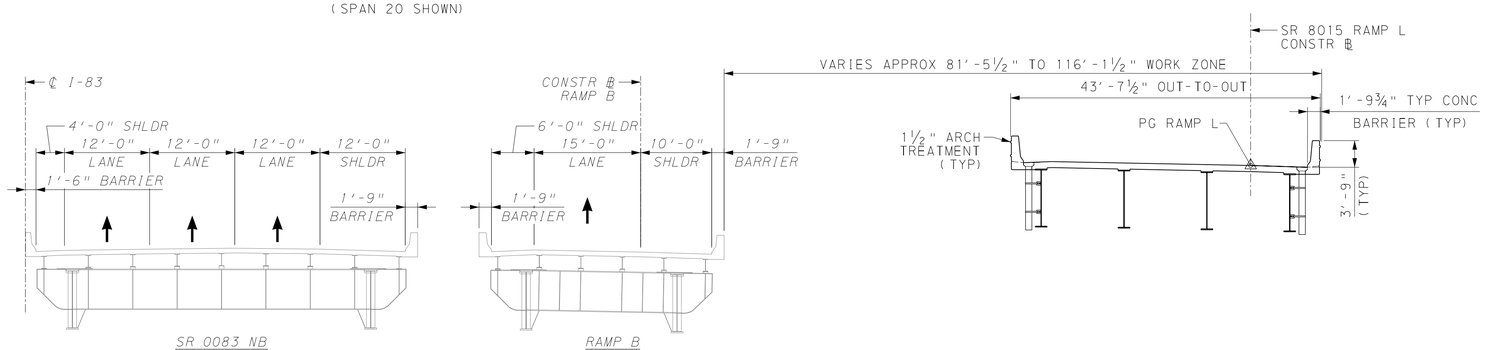


## TYPICAL SECTION - STAGE 2A

2 0 4 8 12 FEET

3/32 "= 1' - 0"

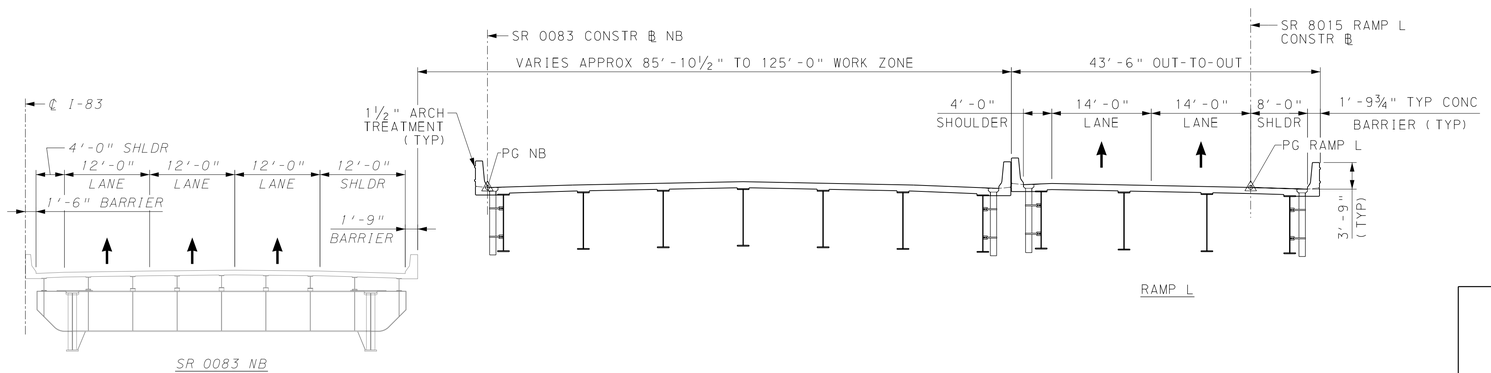


## TYPICAL SECTION - STAGE 2B

2 0 4 8 12 FEET

3/32 "= 1' - 0"

| Mark | Description | By | Chk'd | Recm'd | Date |
|---|---|---|---|---|---|
| REVISIONS | | | | | |

SR 0083 PREVIOUSLY KNOWN AS LR 767
BMS STR ID: 22-0083-0414-2378 (NB)
22-0083-0415-2340 (SB)

MPMS/ECMS PROJ: 113754
BRKEY: 69031 (NB)
69085 (SB)

HNTB

COMMONWEALTH OF PENNSYLVANIA
DEPARTMENT OF TRANSPORTATION

CONCEPTUAL

# CUMBERLAND AND DAUPHIN COUNTIES
# SR 0083 SECTION 094

SR 0083 NB SEG 0414 OFFSET 2378
SR 0083 SB SEG 0415 OFFSET 2340
SR 0083 NB STA 197+11.81 SR 0083 SB STA 196+77.25
OVER LOWTHER ST, NSRC & SUSQUEHANNA RIVER
19-SPAN CONTINUOUS STEEL MULTI-GIRDER BRIDGE
TYPE, SIZE & LOCATION

## STAGING TYPICAL SECTIONS - 3

PREPARED BY:
HNTB CORPORATION
4507 NORTH FRONT STREET
SUITE 300
HARRISBURG, PA 17110

RECOMMENDED _____

SHEET 28 OF 28

S-40918 (NB)
S-40966 (SB)

| DES: MKB | DES CKD: EMG | DWG: MKB | DWG CKD: EMG |
|---|---|---|---|

10/2/2023
FILENAME: 43377-s-br-stg216.dgn

# Viaduct Structure Plans

Preliminary Design Plans for reconstruction of the viaduct from the east shore of the Susquehanna River to Cameron Street along with the Front Street/2nd Street interchange as described in greater detail in Section 2.1.1 Proposed South Bridge Alternative, of the EA.

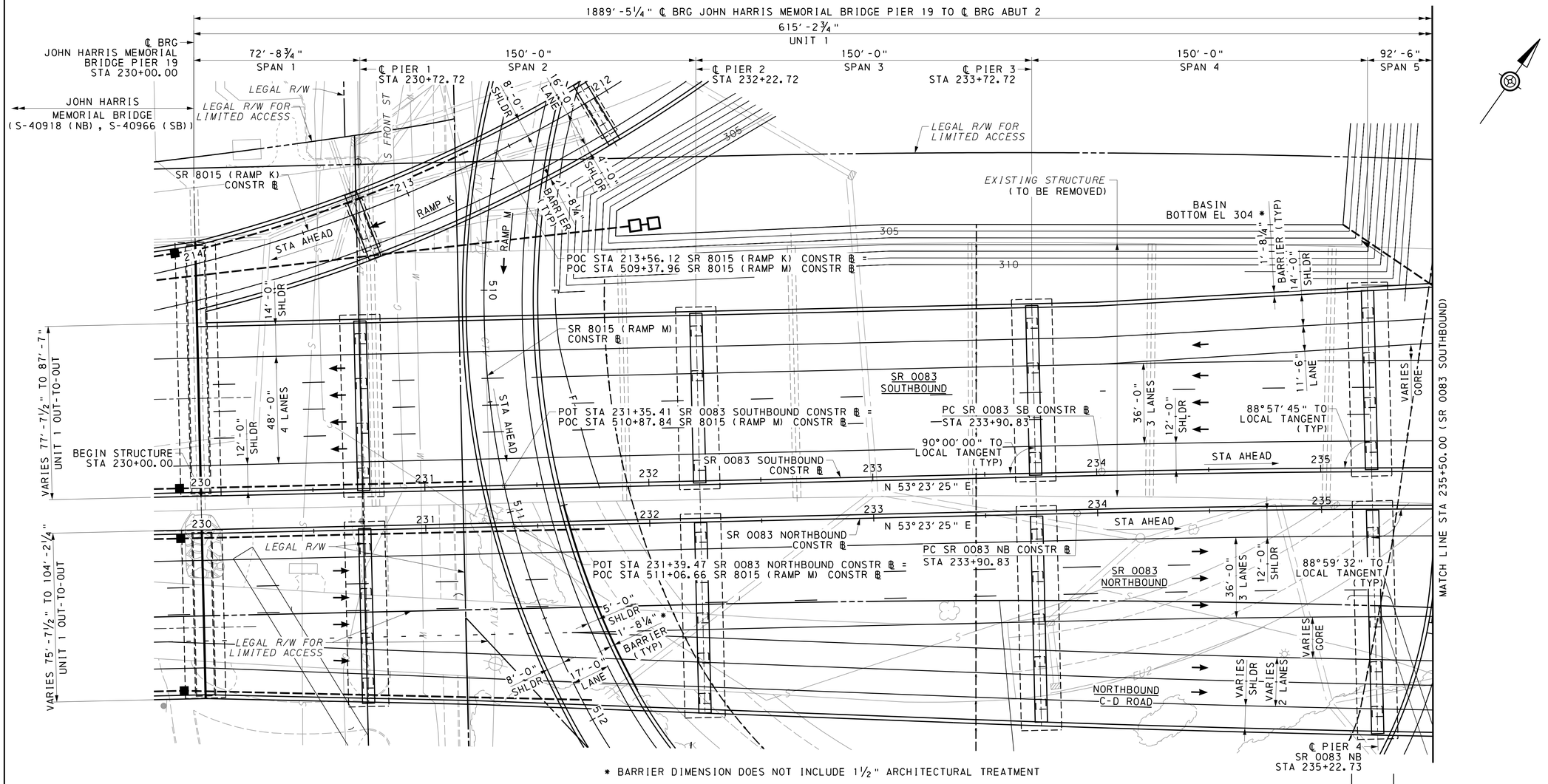


* BARRIER DIMENSION DOES NOT INCLUDE 1½" ARCHITECTURAL TREATMENT

PLAN

25 0 25 FEET

| INDEX OF DRAWINGS | |
|---|---|
| SHEET NUMBER | TITLE |
| 1-3 | GENERAL PLANS |
| 4-5 | GENERAL ELEVATIONS |
| 6-8 | TYPICAL SECTIONS |

| Mark | Description | By | Chk'd | Recm'd | Date |
|---|---|---|---|---|---|
| REVISIONS | | | | | |

SR 0083 PREVIOUSLY KNOWN AS LR 767
BMS STR ID: 22-0083-0420-2975 (NB)
22-0083-0421-2975 (SB)

MPMS/ECMS PROJ: 113376
BRKEY: 69032 (NB)
69086 (SB)

HNTB

COMMONWEALTH OF PENNSYLVANIA
DEPARTMENT OF TRANSPORTATION

CONCEPTUAL

DAUPHIN COUNTY
SR 0083 SECTION 094
SR 0083 NB SEG 0420 OFFSET 2975
SR 0083 SB SEG 0421 OFFSET 2975
SR 0083 STA 39+08.41 OVER S FRONT ST,
SR 8015 (RAMP M), SR 8015 (RAMP L), AMTRAK RR,
NORFOLK SOUTHERN RR, PAXTON CREEK, S CAMERON ST
PRELIMINARY TYPE, SIZE & LOCATION
GENERAL PLAN - 1

PREPARED BY:
HNTB CORPORATION
4507 NORTH FRONT STREET
SUITE 300
HARRISBURG, PA 17110

RECOMMENDED _____

SHEET 1 OF 8

S-40919 (NB)
S-40967 (SB)

| DES: BLC | DES CKD: ZAA | DWG: JTM | DWG CKD: BLC |
|---|---|---|---|

10/2/2023
FILENAME: 63016-sp-br07-gpe01.dgn

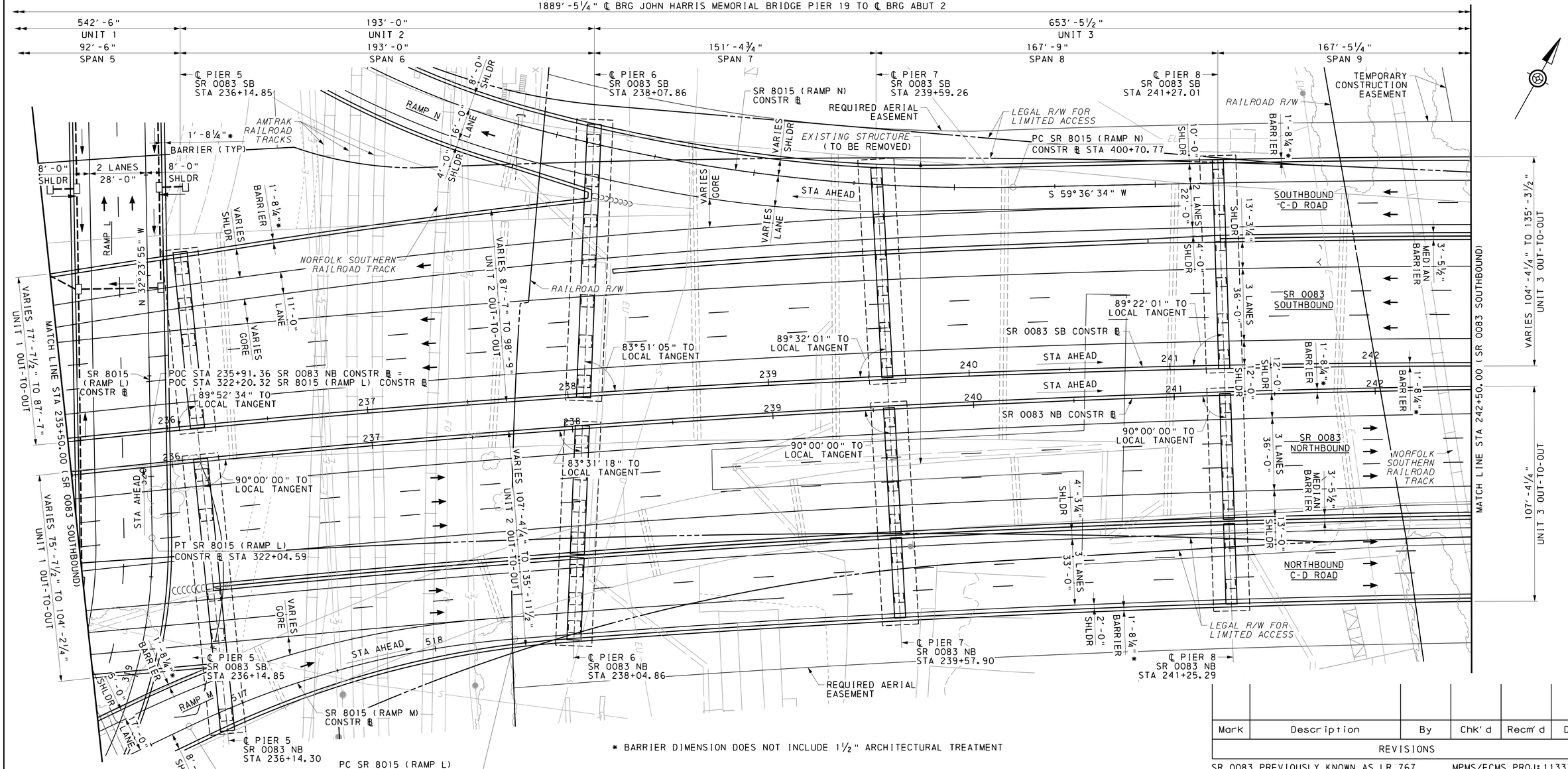


* BARRIER DIMENSION DOES NOT INCLUDE 1½" ARCHITECTURAL TREATMENT

PLAN
25 0 25 FEET

| Mark | Description | By | Chk'd | Recm'd | Date |
|---|---|---|---|---|---|
| REVISIONS | | | | | |

SR 0083 PREVIOUSLY KNOWN AS LR 767
BMS STR ID: 22-0083-0420-2975 (NB)
22-0083-0421-2975 (SB)

MPMS/ECMS PROJ: 113376
BRKEY: 69032 (NB)
69086 (SB)

HNTB

# COMMONWEALTH OF PENNSYLVANIA
DEPARTMENT OF TRANSPORTATION

CONCEPTUAL

## DAUPHIN COUNTY
## SR 0083 SECTION 094
SR 0083 NB SEG 0420 OFFSET 2975
SR 0083 SB SEG 0421 OFFSET 2975
SR 0083 STA 39+08.41 OVER S FRONT ST,
SR 8015 (RAMP M), SR 8015 (RAMP L), AMTRAK RR,
NORFOLK SOUTHERN RR, PAXTON CREEK, S CAMERON ST
PRELIMINARY TYPE, SIZE & LOCATION
GENERAL PLAN - 2


PREPARED BY:
HNTB CORPORATION
4507 NORTH FRONT STREET
SUITE 300
HARRISBURG, PA 17110


RECOMMENDED _____

SHEET 2 OF 8

S-40919 (NB)
S-40967 (SB)

| DES: BLC | DES CKD: ZAA | DWG: JTM | DWG CKD: BLC |
|---|---|---|---|

10/2/2023
FILENAME: 63016-sp-br07-gp002.dgn

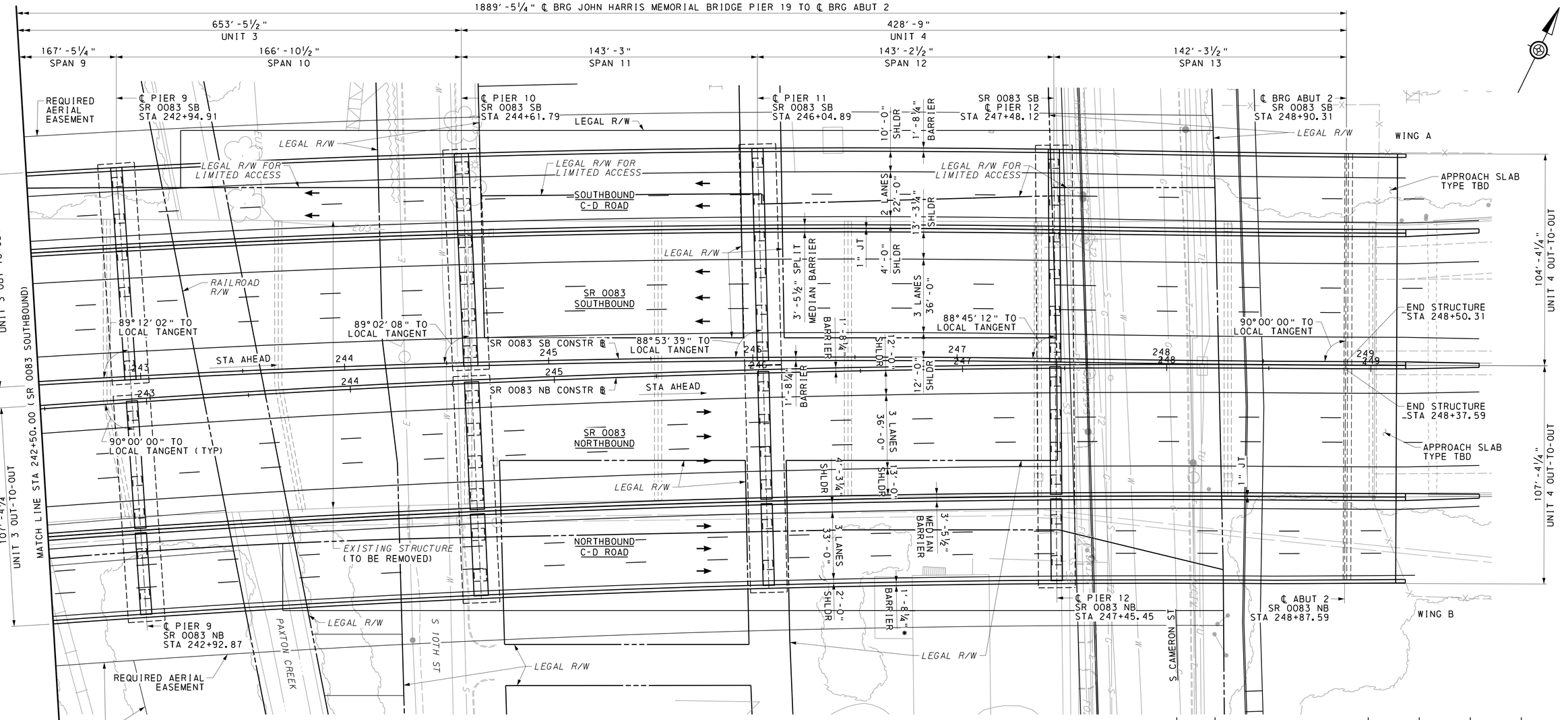


* BARRIER DIMENSION DOES NOT INCLUDE 1½" ARCHITECTURAL TREATMENT

PLAN

25 0 25 FEET

## HYDRAULIC DATA

DRAINAGE AREA: 24,100 SQUARE MILES

| FREQUENCY | | MAGNITUDE | ELEVATION | VELOCITY |
|---|---|---|---|---|
| 50 YEAR FLOOD-DESIGN | PROPOSED | | | |
| | *EXISTING* | | | |
| 100 YEAR FLOOD | PROPOSED | | | |
| | *EXISTING* | | | |
| 100 YEAR FLOOD-FEMA | PROPOSED | | | |
| | *EXISTING* | | | |

NOTE: THE VELOCITY REPRESENTS THE INTERNAL BRIDGE VELOCITY AT THE UPSTREAM BRIDGE FACE.

FLOOD OF RECORD: 1,020,000 CFS (1972)

| Mark | Description | By | Chk'd | Recm'd | Date |
|---|---|---|---|---|---|
| REVISIONS | | | | | |

SR 0083 PREVIOUSLY KNOWN AS LR 767
BMS STR ID: 22-0083-0420-2975 (NB)
22-0083-0421-2975 (SB)

MPMS/ECMS PROJ: 113376
BRKEY: 69032 (NB)
69086 (SB)

HNTB

# COMMONWEALTH OF PENNSYLVANIA
DEPARTMENT OF TRANSPORTATION

CONCEPTUAL

# DAUPHIN COUNTY
# SR 0083 SECTION 094
SR 0083 NB SEG 0420 OFFSET 2975
SR 0083 SB SEG 0421 OFFSET 2975
SR 0083 STA 39+08.41 OVER S FRONT ST,
SR 8015 (RAMP M), SR 8015 (RAMP L), AMTRAK RR,
NORFOLK SOUTHERN RR, PAXTON CREEK, S CAMERON ST
PRELIMINARY TYPE, SIZE & LOCATION
GENERAL PLAN - 3

PREPARED BY:
HNTB CORPORATION
4507 NORTH FRONT STREET
SUITE 300
HARRISBURG, PA 17110

RECOMMENDED _____

SHEET 3 OF 8

S-40919 (NB)
S-40967 (SB)

10/2/2023
FILENAME: 63016-sp-br07-gpe03.dgn

| DES: BLC | DES CKD: ZAA | DWG: JTM | DWG CKD: BLC |
|---|---|---|---|

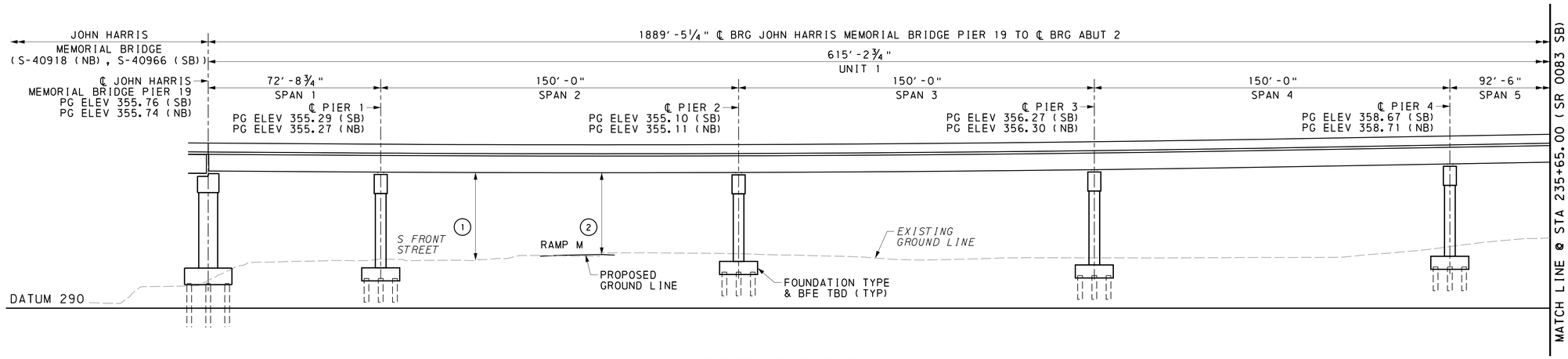


## DEVELOPED ELEVATION 1

25 0 25 FEET

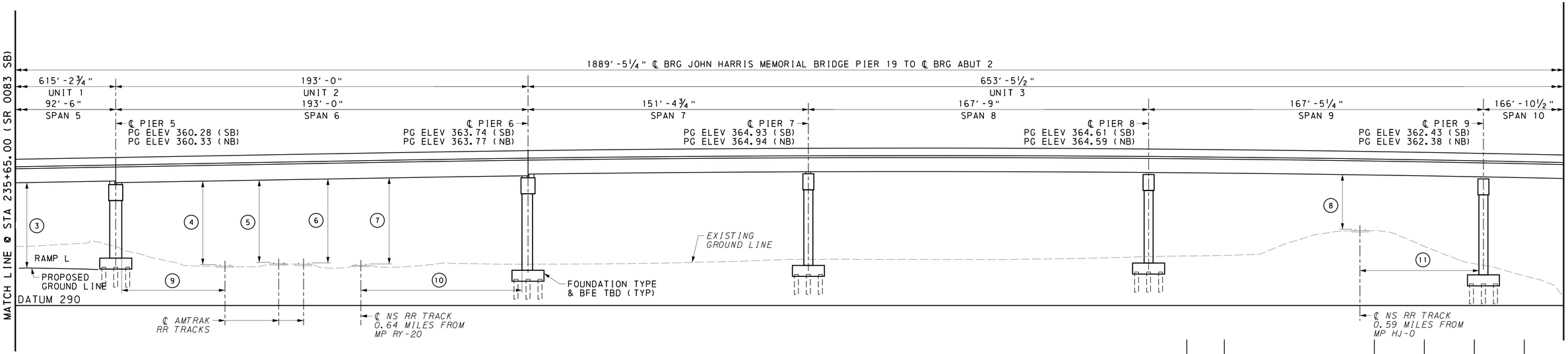


## DEVELOPED ELEVATION 2

25 0 25 FEET

| MINIMUM VERTICAL AND HORIZONTAL CLEARANCES | | | |
|---|---|---|---|
| LOCATION | MINIMUM CLEARANCE REQUIRED | *MINIMUM EXISTING CLEARANCE* | MINIMUM CLEARANCE PROVIDED |
| 1 | 16'-6" | *22'-2"* | 35'-5½" |
| 2 | 16'-6" | *22'-2"* | 32'-11½" |
| 3 | 16'-6" | *14'-6½"* | 41'-2½" |
| 4 | 24'-3" | *31'-1"* | 41'-7" |
| 5 | 24'-3" | *31'-1"* | 40'-8½" |
| 6 | 24'-3" | *31'-1"* | 41'-2" |
| 7 | 24'-0" | *31'-1"* | 42'-3" |
| 8 | 24'-0" | *22'-6"* | 25'-6" |
| 9 | 16'-0" | *39'-0½"* | 37'-11¼" |
| 10 | 22'-0" | *16'-7½"* | 70'-5½" |
| 11 | 22'-0" | *30'-9¾"* | 38'-3" |

NOTES:

1. SPAN AND UNIT MEASUREMENTS ALONG SR 0083 SOUTHBOUND CONSTRUCTION BASELINE.

| Mark | Description | By | Chk'd | Recm'd | Date |
|---|---|---|---|---|---|
| REVISIONS | | | | | |

SR 0083 PREVIOUSLY KNOWN AS LR 767
BMS STR ID: 22-0083-0420-2975 (NB)
22-0083-0421-2975 (SB)
MPMS/ECMS PROJ: 113376
BRKEY: 69032 (NB)
69086 (SB)

HNTB

CONCEPTUAL

# COMMONWEALTH OF PENNSYLVANIA
DEPARTMENT OF TRANSPORTATION

## DAUPHIN COUNTY
## SR 0083 SECTION 094
SR 0083 NB SEG 0420 OFFSET 2975
SR 0083 SB SEG 0421 OFFSET 2975
SR 0083 STA 39+08.41 OVER S FRONT ST,
SR 8015 (RAMP M), SR 8015 (RAMP L), AMTRAK RR,
NORFOLK SOUTHERN RR, PAXTON CREEK, S CAMERON ST
PRELIMINARY TYPE, SIZE & LOCATION
## GENERAL ELEVATION - 1

PREPARED BY:
HNTB CORPORATION
4507 NORTH FRONT STREET
SUITE 300
HARRISBURG, PA 17110

RECOMMENDED _____

SHEET 4 OF 8

S-40919 (NB)
S-40967 (SB)

DES: BLC | DES CKD: ZAA | DWG: JTM | DWG CKD: BLC

10/2/2023
FILENAME: 63016-sp-br07-gpe04.dgn

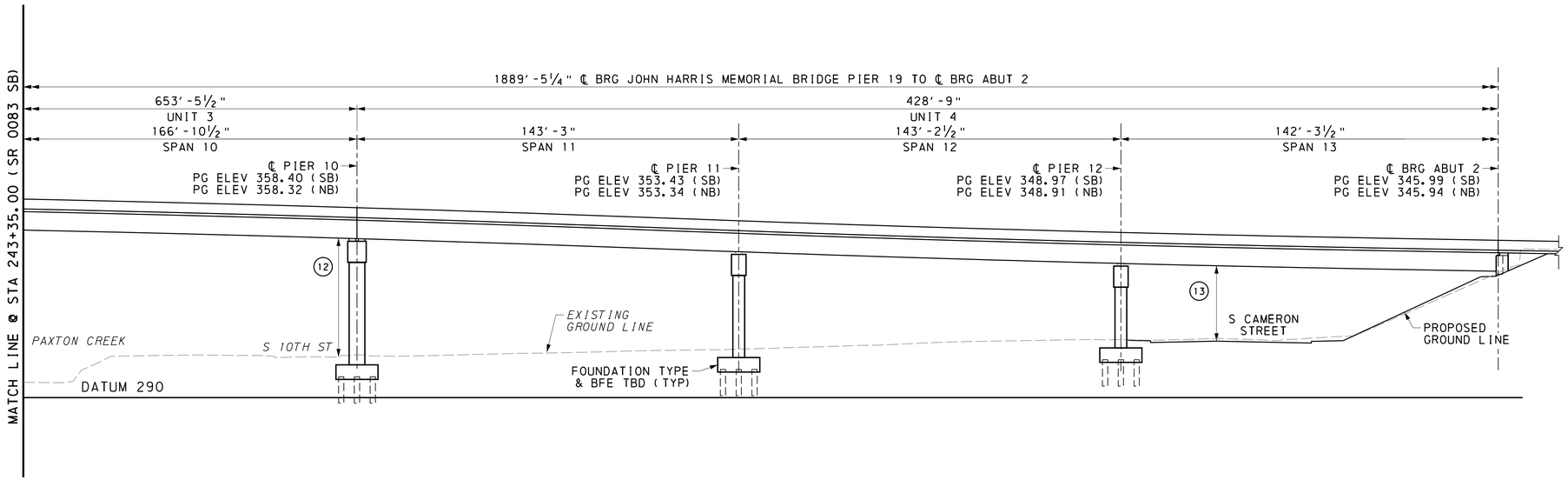


## DEVELOPED ELEVATION 3

25 0 25 FEET

### VERTICAL ALIGNMENT DATA

#### SR 0083 SOUTHBOUND

STA AHEAD

-0.65% | PVI STA 196+36.64, ELEV 377.76 | PVC STA 230+59.64, ELEV 355.37

-0.65% 1.75% | PVI STA 232+59.64, ELEV 354.06, VC 400.00', MO 1.20'

1.75% | PVT STA 234+59.64, ELEV 357.55 | PVC STA 237+57.00, ELEV 362.74

1.75% -3.77% | PVI STA 241+72.00, ELEV 369.99, VC 830.00', MO -5.72'

-3.77% -1.80% | PVI STA 247+24.50, ELEV 349.16, VC 275.00', MO 0.68'

-1.80% | PVI STA 248+62.00, ELEV 346.69 | PVC STA 249+19.75, ELEV 345.65

#### SR 0083 NORTHBOUND

STA AHEAD

-0.65% | PVI STA 196+33.93, ELEV 377.76 | PVC STA 230+56.93, ELEV 355.37

-0.65% 1.75% | PVI STA 232+56.93, ELEV 354.06, VC 400.00', MO 1.20'

1.75% | PVT STA 234+56.93, ELEV 357.55 | PVC STA 237+54.50, ELEV 362.75

1.75% -3.77% | PVI STA 241+69.50, ELEV 369.99, VC 830.00', MO -5.72'

-3.77% -1.80% | PVI STA 247+22.00, ELEV 349.16, VC 275.00', MO 0.68'

-1.80% | PVI STA 248+59.50, ELEV 346.68 | PVC STA 249+17.04, ELEV 345.65

| MINIMUM VERTICAL AND HORIZONTAL CLEARANCES | | |
|---|---|---|
| LOCATION | MINIMUM CLEARANCE REQUIRED | MINIMUM CLEARANCE PROVIDED |
| 12 | 16' -6" | 43' -6½" |
| 13 | 16' -6" | 27' -0½" |

### HORIZONTAL ALIGNMENT DATA

#### SR 0083 SOUTHBOUND

STA 196+86.41 — N53°23'25"E — STA 233+90.83

PC STA 234+02.31
PI STA 240+82.25
PRC STA 248+57.48
Δ = 11°40'34" RT
T = 679.94'
D = 0°51'42"
L = 1355.17'
R = 6650.00'
E = 34.67'

PRC STA 248+57.48
PI STA 248+38.62
PT STA 249+19.75
Δ = 0°50'16" LT
T = 81.14'
D = 0°30'59"
L = 162.27'
R = 11098.27'
E = 0.30'

#### SR 0083 NORTHBOUND

STA 199+43.93 — N53°23'25"E — STA 233+90.83

PC STA 233+90.83
PI STA 241+24.18
PRC STA 248+52.89
Δ = 11°10'10" RT
T = 733.36'
D = 0°45'50"
L = 1462.07'
R = 7500.00'
E = 35.77'

PRC STA 248+52.89
PI STA 248+84.96
PT STA 249+17.04
Δ = 0°19'52" LT
T = 32.07'
D = 0°30'58"
L = 64.15'
R = 11101.73'
E = 0.05'

| Mark | Description | By | Chk'd | Recm'd | Date |
|---|---|---|---|---|---|
| REVISIONS | | | | | |

SR 0083 PREVIOUSLY KNOWN AS LR 767
BMS STR ID: 22-0083-0420-2975 (NB)
22-0083-0421-2975 (SB)
MPMS/ECMS PROJ: 113376
BRKEY: 69032 (NB)
69086 (SB)

HNTB

COMMONWEALTH OF PENNSYLVANIA
DEPARTMENT OF TRANSPORTATION

CONCEPTUAL

DAUPHIN COUNTY
SR 0083 SECTION 094
SR 0083 NB SEG 0420 OFFSET 2975
SR 0083 SB SEG 0421 OFFSET 2975
SR 0083 STA 39+08.41 OVER S FRONT ST,
SR 8015 (RAMP M), SR 8015 (RAMP L), AMTRAK RR,
NORFOLK SOUTHERN RR, PAXTON CREEK, S CAMERON ST
PRELIMINARY TYPE, SIZE & LOCATION
GENERAL ELEVATION - 2

PREPARED BY:
HNTB CORPORATION
4507 NORTH FRONT STREET
SUITE 300
HARRISBURG, PA 17110

RECOMMENDED _____

SHEET 5 OF 8

S-40919 (NB)
S-40967 (SB)

| DES: BLC | DES CKD: ZAA | DWG: JTM | DWG CKD: BLC |
|---|---|---|---|

10/2/2023
FILENAME: 63016-sp-br07-gpe05.dgn

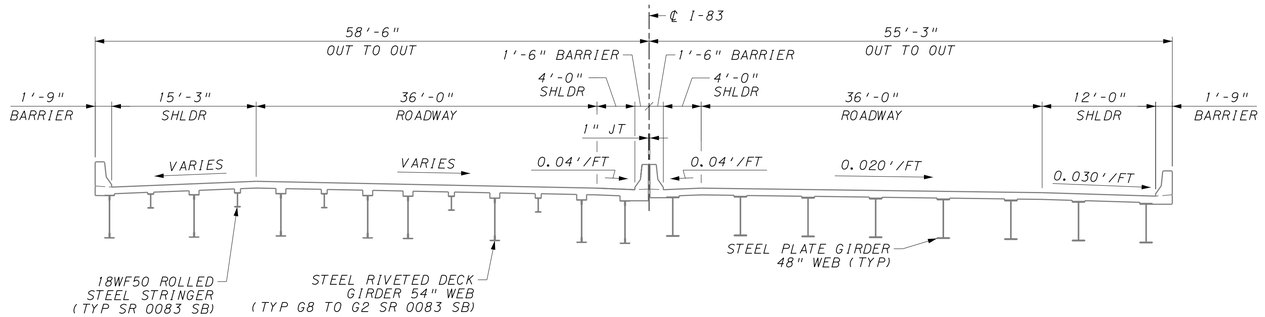


## EXISTING TYPICAL SECTION

2 0 4 8 FEET

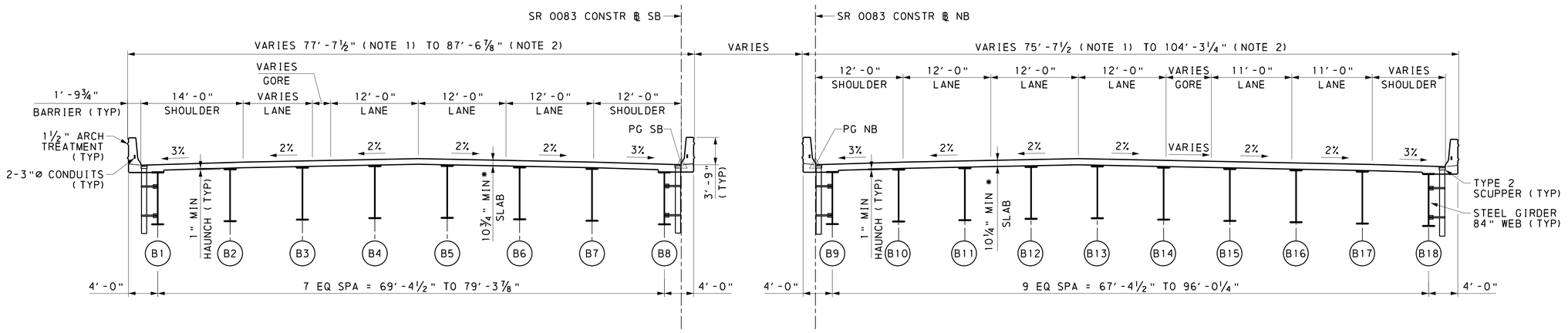


## TYPICAL SECTION - UNIT 1

2 0 4 8 FEET

* INCLUDES 1¼" LMC OVERLAY

**NOTES:**

1. MEASURED ALONG CENTERLINE OF BEARING AT SPAN 1 PIER 19.
2. MEASURED ALONG CENTERLINE OF BEARING AT SPAN 5 PIER 5.

| Mark | Description | By | Chk'd | Recm'd | Date |
|---|---|---|---|---|---|
| | REVISIONS | | | | |

SR 0083 PREVIOUSLY KNOWN AS LR 767
BMS STR ID: 22-0083-0420-2975 (NB)
22-0083-0421-2975 (SB)

MPMS/ECMS PROJ: 113376
BRKEY: 69032 (NB)
69086 (SB)

HNTB

COMMONWEALTH OF PENNSYLVANIA
DEPARTMENT OF TRANSPORTATION

CONCEPTUAL

DAUPHIN COUNTY
SR 0083 SECTION 094
SR 0083 NB SEG 0420 OFFSET 2975
SR 0083 SB SEG 0421 OFFSET 2975
SR 0083 STA 39+08.41 OVER S FRONT ST,
SR 8015 (RAMP M), SR 8015 (RAMP L), AMTRAK RR,
NORFOLK SOUTHERN RR, PAXTON CREEK, S CAMERON ST
PRELIMINARY TYPE, SIZE & LOCATION
TYPICAL SECTION - 1

PREPARED BY:
HNTB CORPORATION
4507 NORTH FRONT STREET
SUITE 300
HARRISBURG, PA 17110

RECOMMENDED _____

SHEET 6 OF 8

S-40919 (NB)
S-40967 (SB)

10/2/2023
FILENAME: 63016-sp-br07-typ01.dgn

| DES: ZAA | DES CKD: BLC | DWG: JTM | DWG CKD: ZAA |
|---|---|---|---|

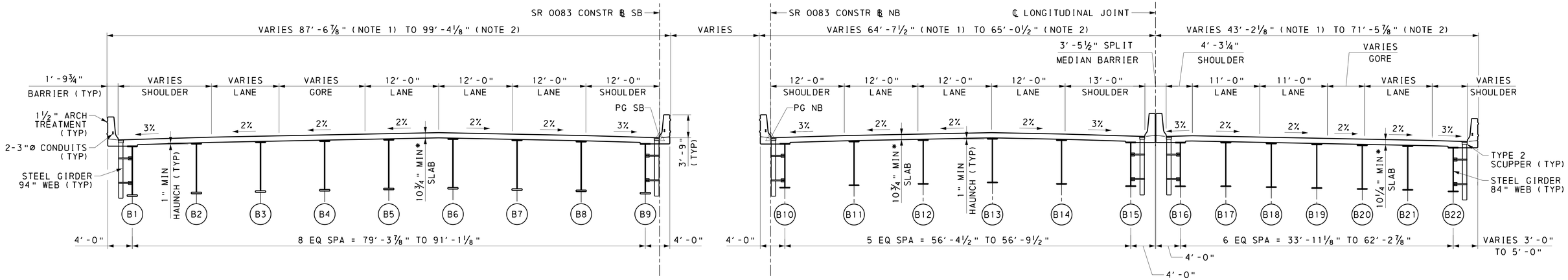


* INCLUDES 1¼" LMC OVERLAY

## TYPICAL SECTION - UNIT 2

2 0 4 8 FEET

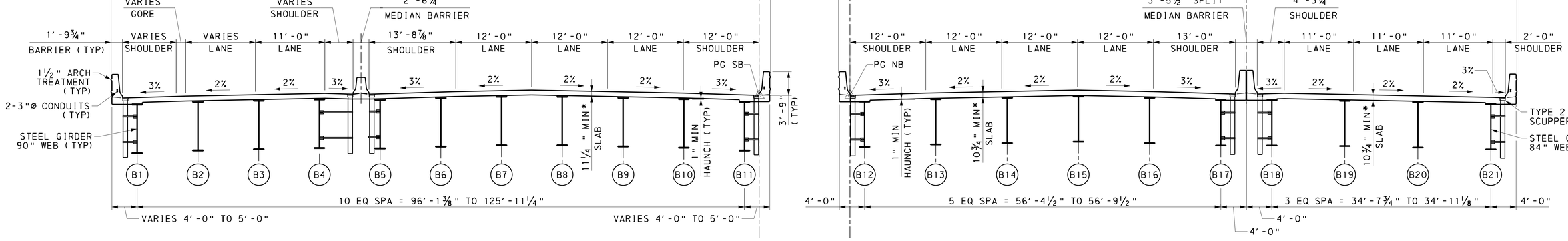


* INCLUDES 1¼" LMC OVERLAY

## TYPICAL SECTION - UNIT 3

2 0 4 8 FEET

NOTES:

1. MEASURED ALONG CENTERLINE OF BEARING AT SPAN 6 PIER 5.
2. MEASURED ALONG CENTERLINE OF BEARING AT SPAN 6 PIER 6.
3. MEASURED ALONG CENTERLINE OF BEARING AT SPAN 7 PIER 6.
4. MEASURED ALONG CENTERLINE OF BEARING AT SPAN 10 PIER 10.

| Mark | Description | By | Chk'd | Recm'd | Date |
|---|---|---|---|---|---|
| REVISIONS | | | | | |

SR 0083 PREVIOUSLY KNOWN AS LR 767
BMS STR ID: 22-0083-0420-2975 (NB)
22-0083-0421-2975 (SB)

MPMS/ECMS PROJ: 113376
BRKEY: 69032 (NB)
69086 (SB)

HNTB

CONCEPTUAL

# COMMONWEALTH OF PENNSYLVANIA
DEPARTMENT OF TRANSPORTATION

# DAUPHIN COUNTY
# SR 0083 SECTION 094
SR 0083 NB SEG 0420 OFFSET 2975
SR 0083 SB SEG 0421 OFFSET 2975
SR 0083 STA 39+08.41 OVER S FRONT ST,
SR 8015 (RAMP M), SR 8015 (RAMP L), AMTRAK RR,
NORFOLK SOUTHERN RR, PAXTON CREEK, S CAMERON ST
PRELIMINARY TYPE, SIZE & LOCATION
## TYPICAL SECTION - 2

PREPARED BY:
HNTB CORPORATION
4507 NORTH FRONT STREET
SUITE 300
HARRISBURG, PA 17110

RECOMMENDED _____

SHEET 7 OF 8

S-40919 (NB)
S-40967 (SB)

10/2/2023
FILENAME: 63016-sp-br07-typ02.dgn

| DES: ZAA | DES CKD: BLC | DWG: JTM | DWG CKD: ZAA |
|---|---|---|---|

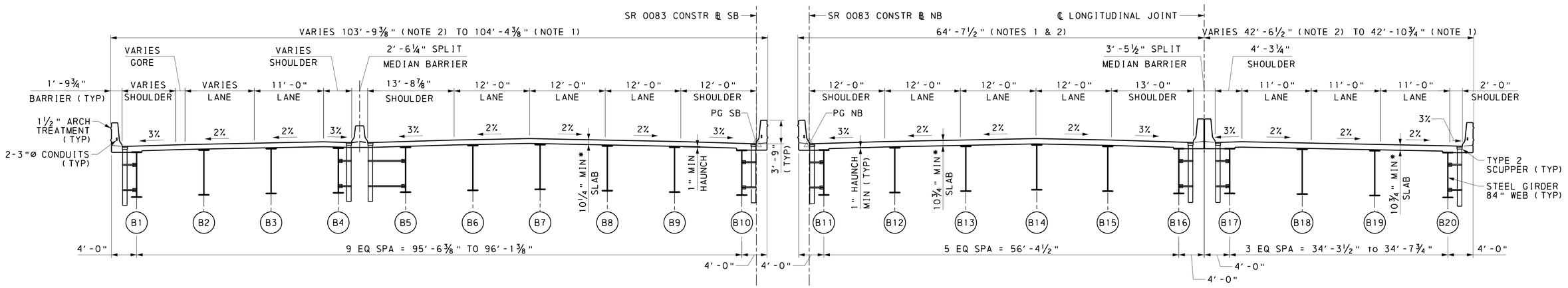


* INCLUDES 1¼" LMC OVERLAY

## TYPICAL SECTION - UNIT 4

2 0 4 8 FEET

NOTES:

1. MEASURED ALONG CENTERLINE OF BEARING AT SPAN 11 PIER 10.
2. MEASURED ALONG CENTERLINE OF BEARING AT SPAN 13 PIER 13.

| Mark | Description | By | Chk'd | Recm'd | Date |
|---|---|---|---|---|---|
| | | | | | |

REVISIONS

SR 0083 PREVIOUSLY KNOWN AS LR 767
BMS STR ID: 22-0083-0420-2975 (NB)
22-0083-0421-2975 (SB)

MPMS/ECMS PROJ: 113376
BRKEY: 69032 (NB)
69086 (SB)

HNTB

COMMONWEALTH OF PENNSYLVANIA
DEPARTMENT OF TRANSPORTATION

CONCEPTUAL

DAUPHIN COUNTY
SR 0083 SECTION 094
SR 0083 NB SEG 0420 OFFSET 2975
SR 0083 SB SEG 0421 OFFSET 2975
SR 0083 STA 39+08.41 OVER S FRONT ST,
SR 8015 (RAMP M), SR 8015 (RAMP L), AMTRAK RR,
NORFOLK SOUTHERN RR, PAXTON CREEK, S CAMERON ST
PRELIMINARY TYPE, SIZE & LOCATION
TYPICAL SECTION - 3

PREPARED BY:
HNTB CORPORATION
4507 NORTH FRONT STREET
SUITE 300
HARRISBURG, PA 17110

RECOMMENDED _____

SHEET 8 OF 8

S-40919 (NB)
S-40967 (SB)

| DES: ZAA | DES CKD: BLC | DWG: JTM | DWG CKD: ZAA |
|---|---|---|---|

10/2/2023
FILENAME: 63016-sp-br07-typ03.dgn

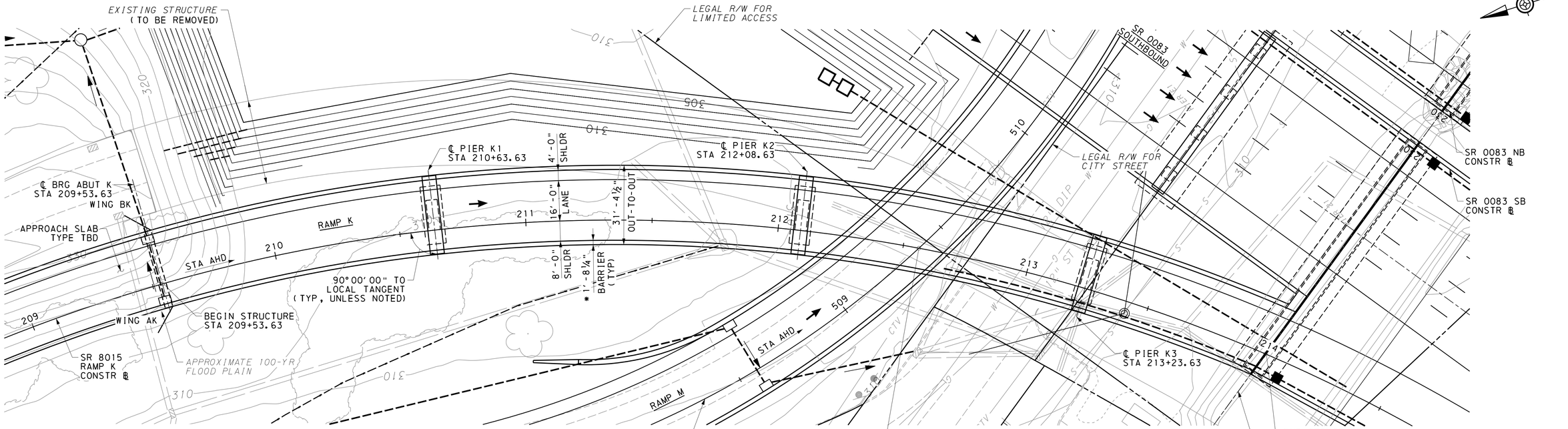


* BARRIER DIMENSION DOES NOT INCLUDE 1½" ARCHITECTURAL TREATMENT

PLAN

10 0 10 20 FEET

| INDEX OF DRAWINGS | |
|---|---|
| SHEET NUMBER | TITLE |
| 1 | GENERAL PLAN |
| 2 | ELEVATION |
| 3 | TYPICAL SECTIONS |

NOTES:

DESIGN SPECIFICATIONS:
- AASHTO LRFD BRIDGE DESIGN SPECIFICATIONS, 7TH EDITION, 2014, AND AS SUPPLEMENTED BY DESIGN MANUAL, PART 4, APRIL 2015.

DESIGN LIVE LOADS:
- PHL-93 OR P-82 (204 KIP PERMIT LOAD).

DEAD LOADS:
- INCLUDES A SURFACE AREA DENSITY OF 0.030 KSF FOR FUTURE WEARING SURFACE ON THE DECK SLAB.
- INCLUDES A SURFACE AREA DENSITY OF 0.015 KSF FOR PERMANENT METAL DECK FORMS WHICH TAKES INTO ACCOUNT THE WEIGHT OF THE FORM, PLUS THE WEIGHT OF THE CONCRETE IN THE VALLEYS OF THE FORMS.

HORIZONTAL CURVE DATA

PI STA 212+01.49
Δ = 59°14'58" RT
T = 284.32'
D = 11°27'33"
L = 517.05'
R = 500.00'
E = 75.19'
PCC STA 209+17.17
PT STA 214+34.22

VERTICAL ALIGNMENT DATA

STA 206+83.31
ELEV 323.38
5.40%
STA 210+99.79
ELEV 345.85

VERTICAL CURVE DATA

PVI STA 212+49.79
ELEV 353.94
VC 300.00'
MO -1.69'

5.40% 0.89%

| Mark | Description | By | Chk'd | Recm'd | Date |
|---|---|---|---|---|---|
| REVISIONS | | | | | |

SR 0083 PREVIOUSLY KNOWN AS LR 767
BMS STR ID: 22-8015-0260-0472 MPMS/ECMS PROJ: 113376 BRKEY: 69034

HNTB

COMMONWEALTH OF PENNSYLVANIA
DEPARTMENT OF TRANSPORTATION

CONCEPTUAL

DAUPHIN COUNTY
SR 0083 SECTION 094
SEG 0260 OFFSET 0472
SR 8015 (RAMP K) STA 209+53.63
OVER SR 8015 (RAMP M)

4-SPAN CONTINUOUS STEEL MULTI-GIRDER BRIDGE
PRELIMINARY TYPE, SIZE & LOCATION
GENERAL PLAN

PREPARED BY:
HNTB CORPORATION
4507 NORTH FRONT STREET
SUITE 300
HARRISBURG, PA 17110

RECOMMENDED _____

SHEET 1 OF 3

S-40922

10/2/2023
FILENAME: 63016-sp-br08-gpa01.dgn

| DES: LER | DES CKD: EMG | DWG: JTM | DWG CKD: MKB |
|---|---|---|---|

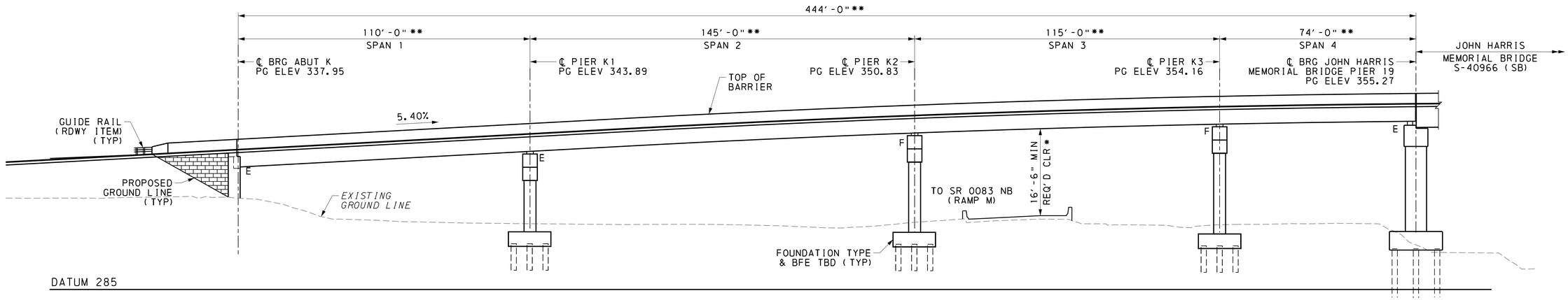


## DEVELOPED ELEVATION

10 0 10 20 FEET

** MEASURED ALONG
CONSTR ℄ RAMP K

* MINIMUM PROVIDED VERTICAL CLEARANCES:

STEEL PLATE GIRDER 66" WEB: 24'-2" (SPAN 3)

| Mark | Description | By | Chk'd | Recm'd | Date |
|---|---|---|---|---|---|
| | | | | | |

REVISIONS

SR 0083 PREVIOUSLY KNOWN AS LR 767
BMS STR ID: 22-8015-0260-0472 MPMS/ECMS PROJ: 113376 BRKEY: 69034

HNTB

COMMONWEALTH OF PENNSYLVANIA
DEPARTMENT OF TRANSPORTATION

CONCEPTUAL

DAUPHIN COUNTY
SR 0083 SECTION 094
SEG 0260 OFFSET 0472
SR 8015 (RAMP K) STA 209+53.63
OVER SR 8015 (RAMP M)

4-SPAN CONTINUOUS STEEL MULTI-GIRDER BRIDGE
PRELIMINARY TYPE, SIZE & LOCATION
ELEVATION

PREPARED BY:
HNTB CORPORATION
4507 NORTH FRONT STREET
SUITE 300
HARRISBURG, PA 17110

RECOMMENDED _____

SHEET 2 OF 3

S-40922

| DES: LER | DES CKD: EMG | DWG: JTM | DWG CKD: MKB |
|---|---|---|---|

10/2/2023
FILENAME: 63016-sp-br08-gpe02.dgn

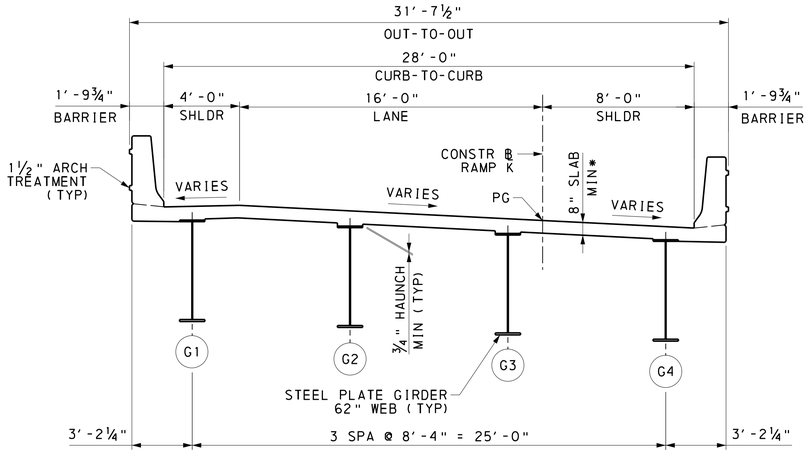


TYPICAL SECTION

2 0 2 4 FEET

* INCLUDES ½" INTEGRAL WEARING SURFACE

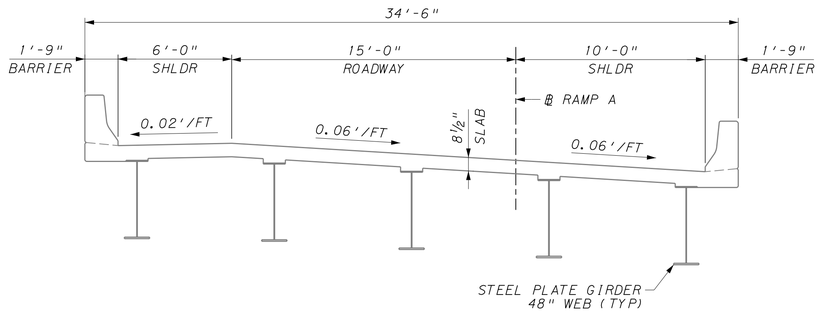


EXISTING TYPICAL SECTION

2 0 2 4 FEET

| Mark | Description | By | Chk'd | Recm'd | Date |
|---|---|---|---|---|---|
| REVISIONS | | | | | |

SR 0083 PREVIOUSLY KNOWN AS LR 767
BMS STR ID: 22-8015-0260-0472 MPMS/ECMS PROJ: 113376 BRKEY: 69034

HNTB

COMMONWEALTH OF PENNSYLVANIA
DEPARTMENT OF TRANSPORTATION

CONCEPTUAL

DAUPHIN COUNTY
SR 0083 SECTION 094
SEG 0260 OFFSET 0472
SR 8015 (RAMP K) STA 209+53.63
OVER SR 8015 (RAMP M)

4-SPAN CONTINUOUS STEEL MULTI-GIRDER BRIDGE
PRELIMINARY TYPE, SIZE & LOCATION
TYPICAL SECTIONS

PREPARED BY:
HNTB CORPORATION
4507 NORTH FRONT STREET
SUITE 300
HARRISBURG, PA 17110

RECOMMENDED _____

SHEET 3 OF 3

S-40922

10/2/2023
FILENAME: 63016-sp-br08-typ01.dgn

| DES: LER | DES CKD: EMG | DWG: JTM | DWG CKD: MKB |
|---|---|---|---|

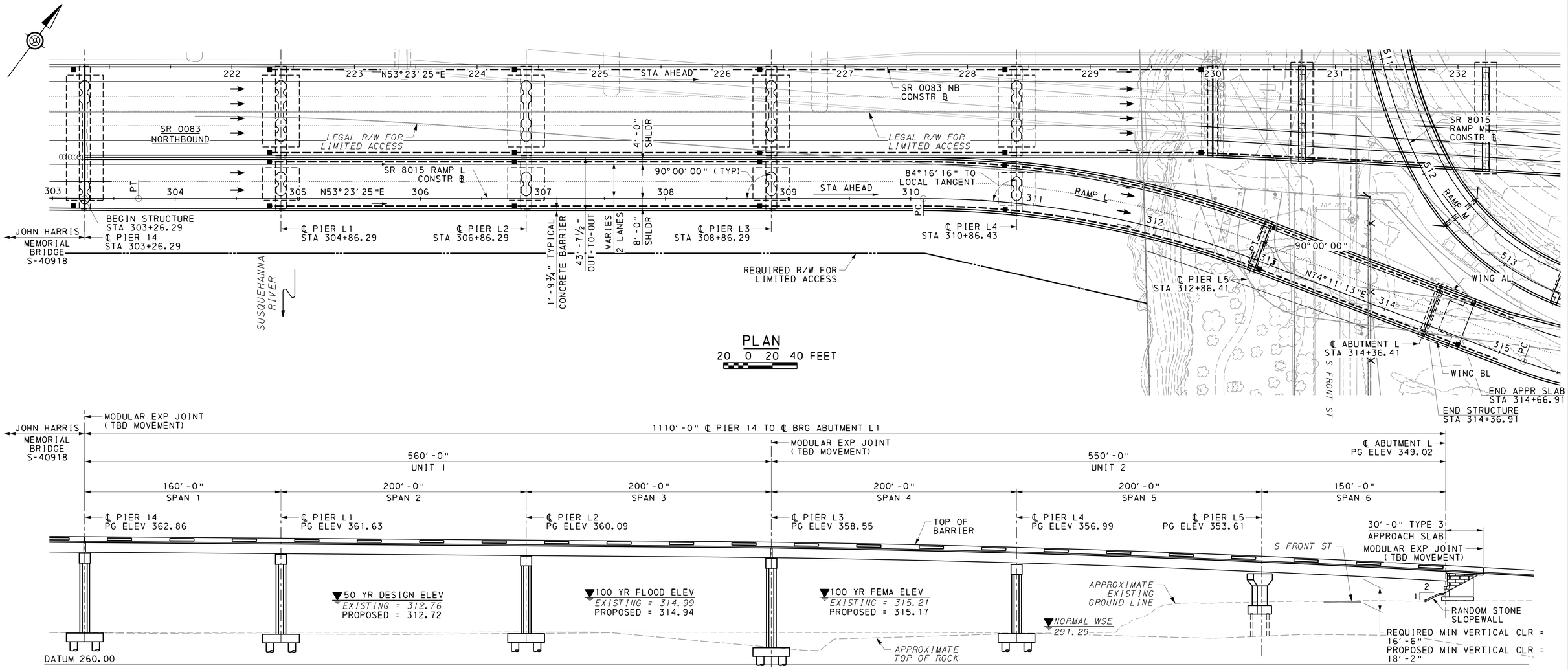


PLAN
20 0 20 40 FEET




ELEVATION
20 0 20 40 FEET

| Mark | Description | By | Chk'd | Recm'd | Date |
|---|---|---|---|---|---|
| REVISIONS | | | | | |

SR 0083 PREVIOUSLY KNOWN AS LR 767
BMS STR ID: 22-8015-0010-0358 MPMS/ECMS PROJ: 113754 BRKEY: 69035

## HYDRAULIC DATA

DRAINAGE AREA: 24,100 SQUARE MILES

| FREQUENCY | | MAGNITUDE | ELEVATION | VELOCITY |
|---|---|---|---|---|
| 50 YEAR FLOOD-DESIGN | PROPOSED | 615,700 CFS | 312.72 | 7.7 F/S |
| | *EXISTING* | *615,700 CFS* | *312.76* | *7.6 F/S* |
| 100 YEAR FLOOD | PROPOSED | 705,700 CFS | 314.94 | 8.1 F/S |
| | *EXISTING* | *705,700 CFS* | *314.99* | *8.0 F/S* |
| 100 YEAR FLOOD-FEMA | PROPOSED | 700,000 CFS | 315.17 | 7.9 F/S |
| | *EXISTING* | *700,000 CFS* | *315.21* | *7.9 F/S* |

FLOOD OF RECORD: 1,020,000 CFS (1972)

| DES: LER | DES CKD: EMG | DWG: MKB | DWG CKD: MKB |
|---|---|---|---|

LEGEND

- DIRECTION OF TRAFFIC
- 200 — PROPOSED CONTOUR
- *200 — EXISTING CONTOUR*
- *EXISTING LEGAL RIGHT-OF-WAY*
- REQUIRED LEGAL RIGHT-OF-WAY
- *EXISTING WATERWAY*
- *E — EXISTING ELECTRIC*
- *EU — EXISTING ELECTRIC UNDERGROUND*
- *T — EXISTING TELEPHONE*
- *CTV — EXISTING CABLE/TELEVISION*
- *FO — EXISTING FIBER OPTIC*
- *G — EXISTING GAS*
- *S — EXISTING SANITARY SEWER*
- *X — EXISTING FENCE*
- *W — EXISTING WATER LINE*
- *WV — WATER VALVE*
- ■ APPROXIMATE SCUPPER LOCATION

NOTES:

1. UNIT LENGTHS MEASURED ALONG SR 8015 (RAMP L) BASELINE.
2. FOUNDATION TYPE(S) ARE TO BE DETERMINED DURING FINAL DESIGN. FOUNDATION TYPES INDICATED ARE CONCEPTUAL AND ARE NOT TO BE USED FOR BIDDING PURPOSES.

HNTB

CONCEPTUAL

PREPARED BY:
HNTB CORPORATION
4507 NORTH FRONT STREET
SUITE 300
HARRISBURG, PA 17110

COMMONWEALTH OF PENNSYLVANIA
DEPARTMENT OF TRANSPORTATION

# DAUPHIN COUNTY
# SR 0083 SECTION 094

SR 0083 NB SEG 0421 OFFSET 2060
SR 8015 (RAMP L) STA 303+26.30
OVER SUSQUEHANNA RIVER & S FRONT ST

6-SPAN CONTINUOUS STEEL MULTI-GIRDER BRIDGE
PRELIMINARY TYPE, SIZE & LOCATION
GENERAL PLAN & ELEVATION

RECOMMENDED _____

SHEET 1 OF 3

S-40926

10/2/2023
FILENAME: 43377-s-br_L-gpe21.dgn

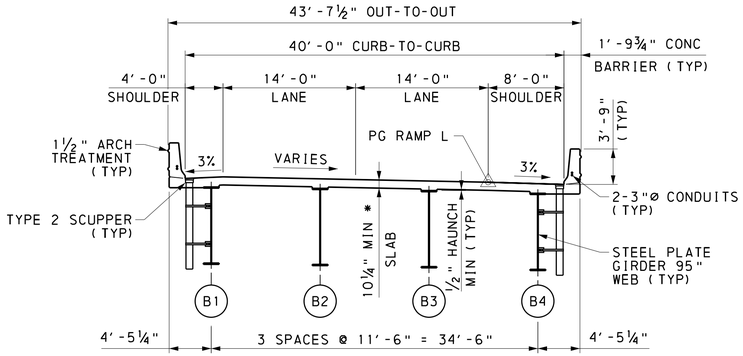


## TYPICAL SECTION

2 0 4 8 FEET

## HORIZONTAL ALIGNMENT AND CURVE DATA

### SR 8015 RAMP L

STA 296+87.79 — N55°58'25"E — STA 302+96.41

PC STA 302+96.41
PI STA 304+74.49
PT STA 306+52.51
Δ = 20°47'48" RT
T = 178.08'
D = 0°43'32"
L = 356.10'
R = 7898'
E = 2.01'

STA 306+52.51 — N53°23'25"E — STA 312+45.49

PC STA 312+45.49
PI STA 313+85.13
PT STA 315+21.71
Δ = 20°47'48" RT
T = 178.08'
D = 0°43'32"
L = 356.10'
R = 7898'
E = 2.01'

### S FRONT ST

STA 10+00.00 — S36°34'42"E — STA 18+61.80

## VERTICAL ALIGNMENT & CURVE DATA

### SR 8015 RAMP L

STA AHEAD

STA 296+87.79
ELEV 367.71
-0.77%
STA 310+68.87
ELEV 357.13

PVI STA 313+68.87
ELEV 354.83
VC 600.00'
MO -3.52'
-0.77% — -5.47%

### S FRONT ST

STA AHEAD

STA 10+00.00
ELEV 310.74
-0.86%
STA 11+45.00
ELEV 309.49

PVI STA 12+20.00
ELEV 308.84
VC 150.00'
MO 0.34'
-0.86% — -0.95%

STA 12+95.00
ELEV 309.56
-0.95%
STA 14+80.00
ELEV 311.32

PVI STA 16+30.00
ELEV 312.75
VC 300.00'
MO -0.28'
-0.95% — 0.21%

STA 17+80.00
ELEV 313.07
0.21%
STA 18+61.80
ELEV 313.25

## DESIGN SPECIFICATIONS

1. AASHTO LRFD BRIDGE DESIGN SPECIFICATIONS, 8TH EDITION, 2017, AND AS SUPPLEMENTED BY DESIGN MANUAL, PART 4 (DM-4) DECEMBER 2019 EDITION.
2. LIVE LOAD DISTRIBUTION TO GIRDERS IS TO BE BASED UPON DM-4 DISTRIBUTION FACTORS FOR TANGENT SECTIONS AND THREE-DIMENSIONAL FINITE ELEMENT DESIGN FOR CURVED GIRDER SECTIONS.
3. DESIGN IS IN ACCORDANCE WITH THE LRFD METHOD.
4. PROVIDE GRADE 60 REINFORCING STEEL BARS THAT MEET THE REQUIREMENTS OF ASTM A615, A996, OR A706. PROVIDE STAINLESS STEEL REINFORCING BARS IN THE BRIDGE DECK.

## *EXISTING STRUCTURE DATA*

*STRUCTURE TYPE:*
*4-SPAN STEEL MULTI-GIRDER BRIDGE*
*SUBSTRUCTURE TYPE:*
*REINFORCED CONCRETE ABUTMENT ON MULTIPLE FOUNDATION TYPES*
*REINFORCED CONCRETE MULTI-COLUMN BENTS ON MULTIPLE FOUNDATION TYPES*
*BRIDGE LENGTH: 360'-0"*
*SKEW: VARIES*
*CLEAR ROADWAY: 31'-0"*

| Mark | Description | By | Chk'd | Recm'd | Date |
|---|---|---|---|---|---|
| REVISIONS | | | | | |

SR 0083 PREVIOUSLY KNOWN AS LR 767
BMS STR ID:22-8015-0010-0358 MPMS/ECMS PROJ:113754 BRKEY:69035

HNTB

CONCEPTUAL

COMMONWEALTH OF PENNSYLVANIA
DEPARTMENT OF TRANSPORTATION

DAUPHIN COUNTY
SR 0083 SECTION 094

SR 0083 NB SEG 0421 OFFSET 2060
SR 8015 (RAMP L) STA 303+26.30
OVER SUSQUEHANNA RIVER & S FRONT ST

6-SPAN CONTINUOUS STEEL MULTI-GIRDER BRIDGE
PRELIMINARY TYPE, SIZE & LOCATION
TYPICAL SECTIONS

PREPARED BY:
HNTB CORPORATION
4507 NORTH FRONT STREET
SUITE 300
HARRISBURG, PA 17110

RECOMMENDED _____

SHEET 2 OF 3

S-40926

10/2/2023
FILENAME: 43377-s-br_L-typ21.dgn

| DES: LER | DES CKD: EMG | DWG: MKB | DWG CKD: MKB |
|---|---|---|---|

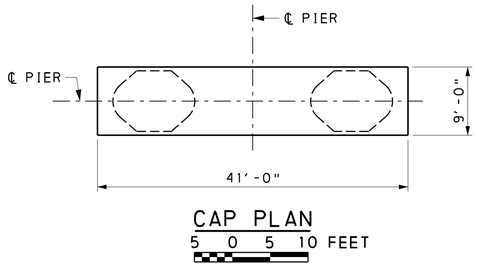


CAP PLAN
5 0 5 10 FEET

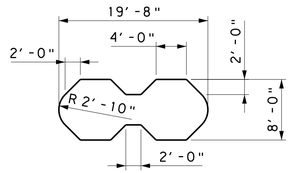


SECTION A-A
5 0 5 10 FEET

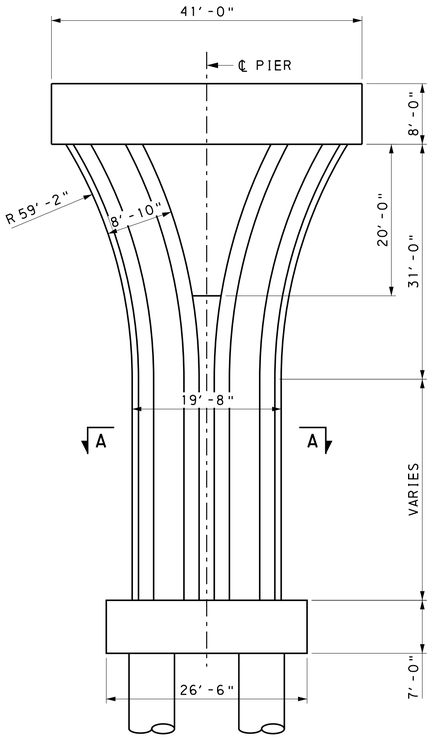


TYPICAL PIER ELEVATION
5 0 5 10 FEET

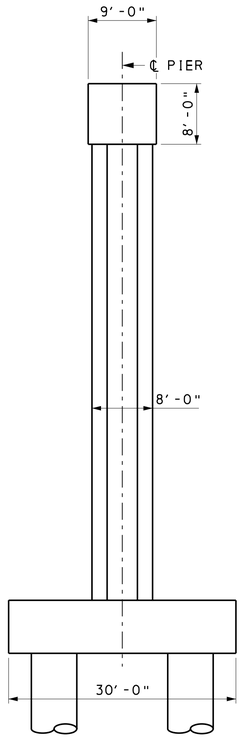


END VIEW
5 0 5 10 FEET

NOTES:

1. PIER SHAPE AND DIMENSIONS SHOWN ARE CONCEPTUAL. PIER DESIGN TO BE FINALIZED DURING FINAL DESIGN.
2. FOUNDATION TYPE(S) ARE TO BE DETERMINED DURING FINAL DESIGN. FOUNDATION TYPES INDICATED ARE CONCEPTUAL AND ARE NOT TO BE USED FOR BIDDING PURPOSES.

| Mark | Description | By | Chk'd | Recm'd | Date |
|---|---|---|---|---|---|
| REVISIONS | | | | | |

SR 0083 PREVIOUSLY KNOWN AS LR 767
BMS STR ID: 22-8015-0010-0358 MPMS/ECMS PROJ: 113754 BRKEY: 69035

HNTB

COMMONWEALTH OF PENNSYLVANIA
DEPARTMENT OF TRANSPORTATION

CONCEPTUAL

DAUPHIN COUNTY
SR 0083 SECTION 094

SR 0083 NB SEG 0421 OFFSET 2060
SR 8015 (RAMP L) STA 303+26.30
OVER SUSQUEHANNA RIVER & S FRONT ST

6-SPAN CONTINUOUS STEEL MULTI-GIRDER BRIDGE
PRELIMINARY TYPE, SIZE & LOCATION
TYPICAL PIER PLAN & ELEVATION

PREPARED BY:
HNTB CORPORATION
4507 NORTH FRONT STREET
SUITE 300
HARRISBURG, PA 17110

RECOMMENDED _____

SHEET 3 OF 3

S-40926

| DES: LER | DES CKD: EMG | DWG: MKB | DWG CKD: MKB |
|---|---|---|---|

10/2/2023
FILENAME: 43377-s-br_L-typ22.dgn

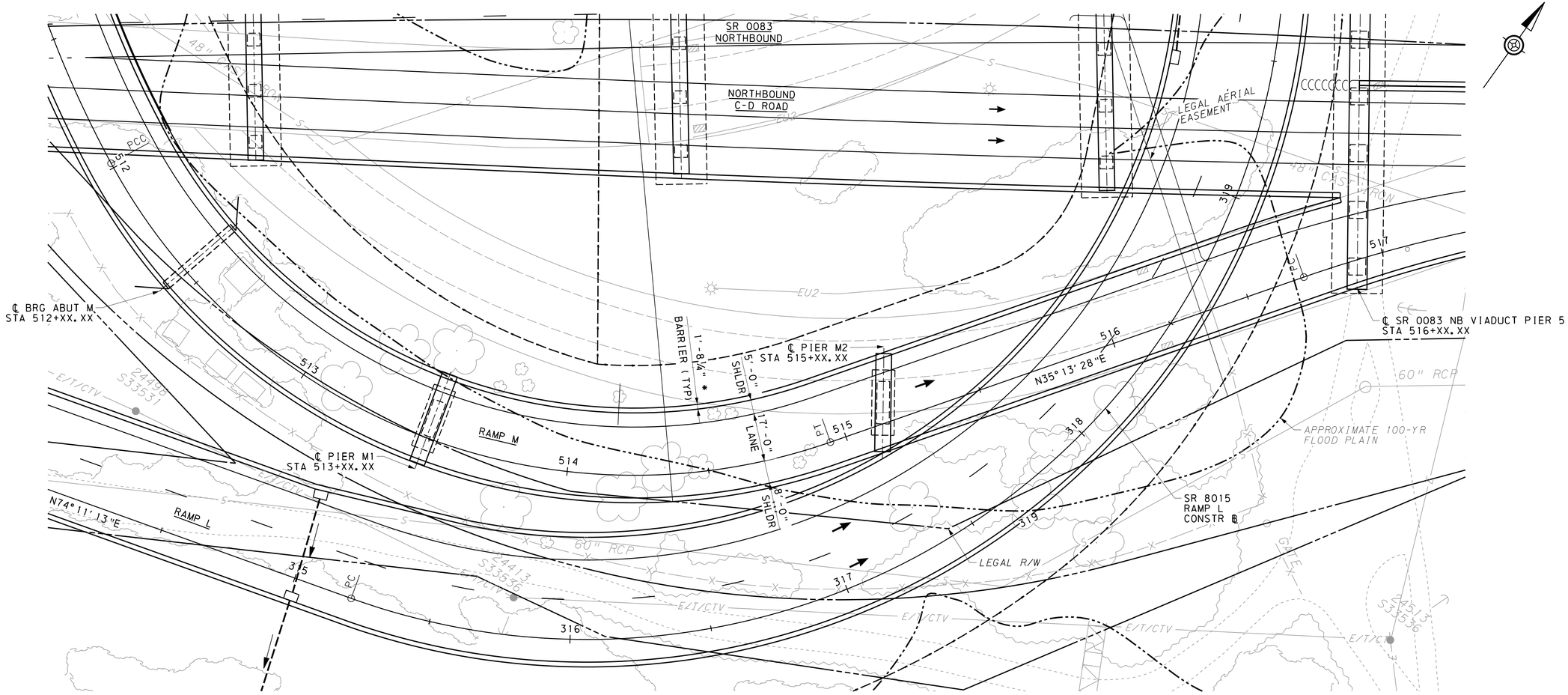


PLAN

10 0 10 20 FEET

* BARRIER DIMENSION DOES NOT INCLUDE 1½" ARCHITECTURAL TREATMENT

## INDEX OF DRAWINGS

| SHEET NUMBER | TITLE |
|---|---|
| 1 | GENERAL PLAN |
| 2 | ELEVATION |
| 3 | TYPICAL SECTIONS |

**NOTES:**

DESIGN SPECIFICATIONS:
- AASHTO LRFD BRIDGE DESIGN SPECIFICATIONS, 7TH EDITION, 2014, AND AS SUPPLEMENTED BY DESIGN MANUAL, PART 4, APRIL 2015.

DESIGN LIVE LOADS:
- PHL-93 OR P-82 (204 KIP PERMIT LOAD).

DEAD LOADS:
- INCLUDES A SURFACE AREA DENSITY OF 0.030 KSF FOR FUTURE WEARING SURFACE ON THE DECK SLAB.
- INCLUDES A SURFACE AREA DENSITY OF 0.015 KSF FOR PERMANENT METAL DECK FORMS WHICH TAKES INTO ACCOUNT THE WEIGHT OF THE FORM, PLUS THE WEIGHT OF THE CONCRETE IN THE VALLEYS OF THE FORMS.

**HORIZONTAL ALIGNMENT DATA**

STA 515+31.74 — N 36°25'52" E — STA 516+05.57

**HORIZONTAL CURVE DATA**

| | |
|---|---|
| PC STA 507+66.24 | PC STA 516+05.57 |
| PI STA 517+53.65 | PI STA 518+28.19 |
| PT STA 515+31.74 | PT STA 520+43.67 |
| Δ = 146°11'59" LT | Δ = 25°06'03" RT |
| T = 987.41' | T = 222.62' |
| D = 19°05'55" | D = 5°43'46" |
| L = 765.50' | L = 438.09' |
| R = 300.00' | R = 1000.00' |
| E = 731.98' | E = 24.48' |

**VERTICAL ALIGNMENT DATA**

STA 511+38.27, ELEV 315.81 — 6.85% — STA 518+03.67, ELEV 349.08

| Mark | Description | By | Chk'd | Recm'd | Date |
|---|---|---|---|---|---|
| REVISIONS | | | | | |

SR 0083 PREVIOUSLY KNOWN AS LR 767
BMS STR ID:22-8015-0250-2640 MPMS/ECMS PROJ:113376 BRKEY:69036

HNTB

COMMONWEALTH OF PENNSYLVANIA
DEPARTMENT OF TRANSPORTATION

CONCEPTUAL

DAUPHIN COUNTY
SR 0083 SECTION 094
SEG 0250 OFFSET 2640
SR 8015 (RAMP M) STA 516+43.29
OVER SR 8015 (RAMP L), AMTRAK AND NSRR

3-SPAN CONTINUOUS STEEL MULTI-GIRDER BRIDGE
PRELIMINARY TYPE, SIZE & LOCATION
GENERAL PLAN

PREPARED BY:
HNTB CORPORATION
4507 NORTH FRONT STREET
SUITE 300
HARRISBURG, PA 17110

RECOMMENDED _____

SHEET 1 OF 3

S-40928

10/2/2023
FILENAME: 63016-sp-br10-gpe01.dgn

| DES: LER | DES CKD: EMG | DWG: JTM | DWG CKD: MKB |
|---|---|---|---|

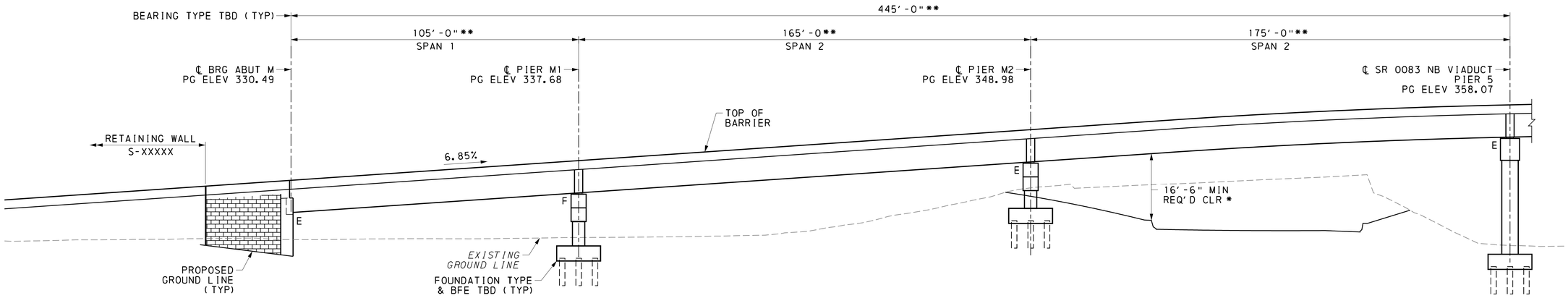


## DEVELOPED ELEVATION

10 0 10 20 FEET

** MEASURED ALONG
CONSTR ℄ RAMP M

* MINIMUM PROVIDED VERTICAL CLEARANCES:

STEEL PLATE GIRDER 84" WEB: 19'-10" (SPAN 1); 24'-7" (SPAN 2 AMTRAK), 27'-2" (SPAN 2 NS RR)

| Mark | Description | By | Chk'd | Recm'd | Date |
|---|---|---|---|---|---|
| REVISIONS | | | | | |

SR 0083 PREVIOUSLY KNOWN AS LR 767
BMS STR ID: 22-8015-0250-2640 MPMS/ECMS PROJ: 113376 BRKEY: 69036

HNTB

COMMONWEALTH OF PENNSYLVANIA
DEPARTMENT OF TRANSPORTATION

CONCEPTUAL

DAUPHIN COUNTY
SR 0083 SECTION 094
SEG 0250 OFFSET 2640
SR 8015 (RAMP M) STA 516+43.29
OVER SR 8015 (RAMP L), AMTRAK AND NSRR

3-SPAN CONTINUOUS STEEL MULTI-GIRDER BRIDGE
PRELIMINARY TYPE, SIZE & LOCATION
ELEVATION

PREPARED BY:
HNTB CORPORATION
4507 NORTH FRONT STREET
SUITE 300
HARRISBURG, PA 17110

RECOMMENDED _____

SHEET 2 OF 3

S-40928

| DES: LER | DES CKD: EMG | DWG: JTM | DWG CKD: MKB |
|---|---|---|---|

10/2/2023
FILENAME: 63016-sp-br10-gpe02.dgn

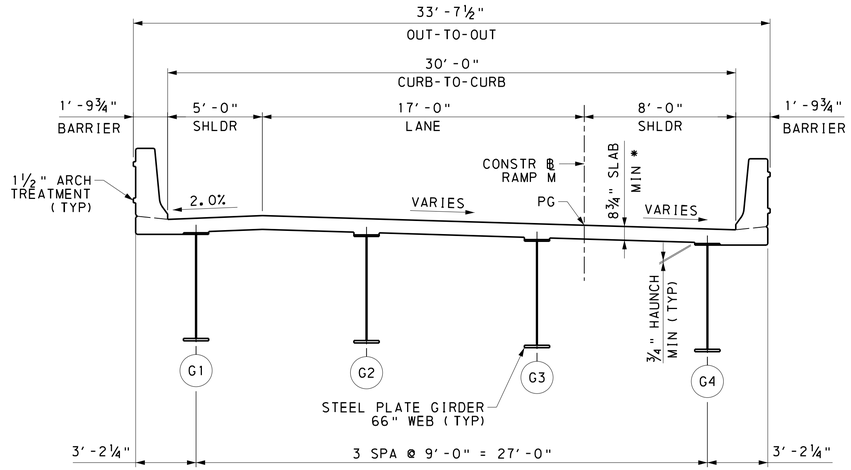


TYPICAL SECTION

2 0 2 4 FEET

* INCLUDES ¾" INTEGRAL WEARING SURFACE

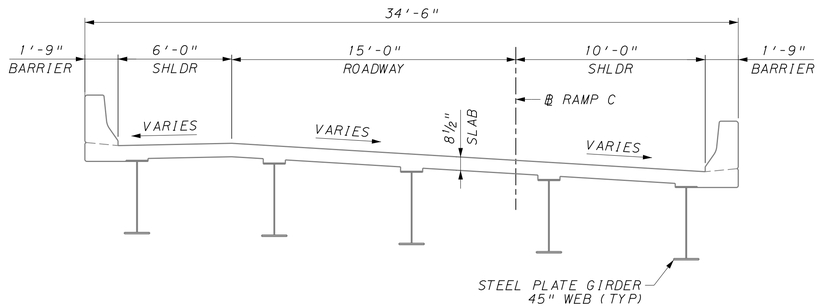


EXISTING TYPICAL SECTION

2 0 2 4 FEET

| Mark | Description | By | Chk'd | Recm'd | Date |
|---|---|---|---|---|---|
| | | | | | |

REVISIONS

SR 0083 PREVIOUSLY KNOWN AS LR 767
BMS STR ID: 22-8015-0250-2640 MPMS/ECMS PROJ: 113376 BRKEY: 69036

HNTB

COMMONWEALTH OF PENNSYLVANIA
DEPARTMENT OF TRANSPORTATION

CONCEPTUAL

DAUPHIN COUNTY
SR 0083 SECTION 094
SEG 0250 OFFSET 2640
SR 8015 (RAMP M) STA 516+43.29
OVER SR 8015 (RAMP L), AMTRAK AND NSRR

3-SPAN CONTINUOUS STEEL MULTI-GIRDER BRIDGE
PRELIMINARY TYPE, SIZE & LOCATION
TYPICAL SECTIONS

PREPARED BY:
HNTB CORPORATION
4507 NORTH FRONT STREET
SUITE 300
HARRISBURG, PA 17110

RECOMMENDED _____

SHEET 3 OF 3

S-40928

10/2/2023
FILENAME: 63016-sp-br10-typ01.dgn

| DES: LER | DES CKD: EMG | DWG: JTM | DWG CKD: MKB |
|---|---|---|---|

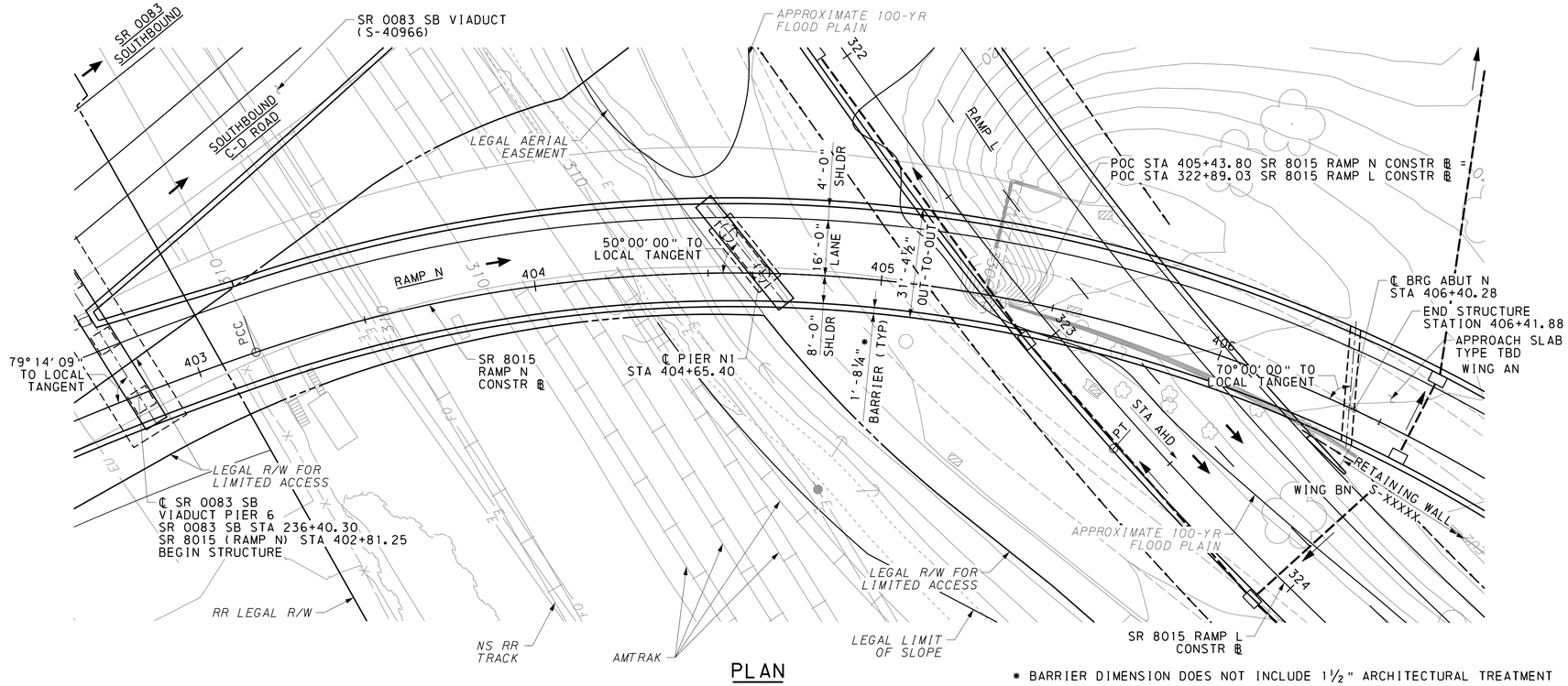


PLAN
10 0 10 20 FEET

* BARRIER DIMENSION DOES NOT INCLUDE 1½" ARCHITECTURAL TREATMENT

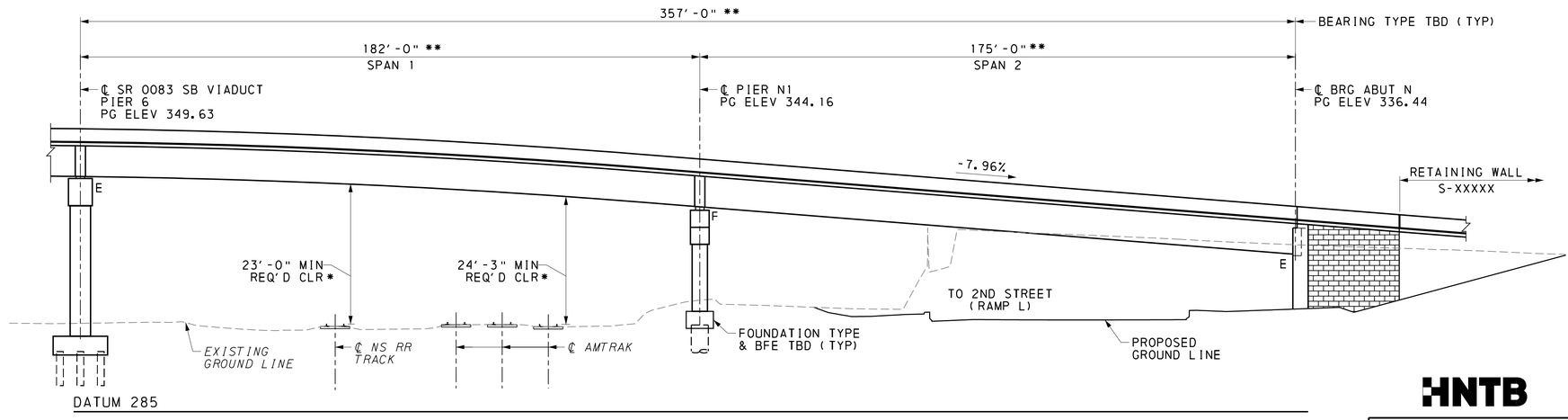


DEVELOPED ELEVATION
10 0 10 20 FEET

** MEASURED ALONG CONSTR ℄ RAMP N

## INDEX OF DRAWINGS

| SHEET NUMBER | TITLE |
|---|---|
| 1 | GENERAL PLAN |
| 2 | TYPICAL SECTIONS |
| | |

NOTES:

DESIGN SPECIFICATIONS:
- AASHTO LRFD BRIDGE DESIGN SPECIFICATIONS, 7TH EDITION, 2014, AND AS SUPPLEMENTED BY DESIGN MANUAL, PART 4, APRIL 2015.

DESIGN LIVE LOADS:
- PHL-93 OR P-82 (204 KIP PERMIT LOAD).

DEAD LOADS:
- INCLUDES A SURFACE AREA DENSITY OF 0.030 KSF FOR FUTURE WEARING SURFACE ON THE DECK SLAB.
- INCLUDES A SURFACE AREA DENSITY OF 0.015 KSF FOR PERMANENT METAL DECK FORMS WHICH TAKES INTO ACCOUNT THE WEIGHT OF THE FORM, PLUS THE WEIGHT OF THE CONCRETE IN THE VALLEYS OF THE FORMS.

HORIZONTAL CURVE DATA

PC STA 403+08.50
PI STA 406+04.69
PT STA 407+95.81
Δ = 82° 07' 11" RT
T = 296.18'
D = 16° 51' 06"
L = 487.31'
R = 340.00'
E = 110.91'

VERTICAL CURVE DATA

PVI STA 402+62.50
ELEV 356.03
VC 525.00'
MO -3.11'

-0.27% -5.00%

VERTICAL ALIGNMENT DATA

STA 405+25.00 ELEV 342.91 — -5.00% — STA 409+56.48 ELEV 321.34

| Mark | Description | By | Chk'd | Recm'd | Date |
|---|---|---|---|---|---|
| REVISIONS | | | | | |

SR 0083 PREVIOUSLY KNOWN AS LR 767
BMS STR ID: 22-8015-0750-0033 MPMS/ECMS PROJ: 113376 BRKEY: 69038

* MINIMUM PROVIDED VERTICAL CLEARANCES:

ALTERNATE 1 (STEEL PLATE GIRDER 84" WEB): 28'-9" (SPAN 1 NS RR); 26'-0" (SPAN 1 AMTRAK) 16'-9" (SPAN 2)

HNTB

CONCEPTUAL

COMMONWEALTH OF PENNSYLVANIA
DEPARTMENT OF TRANSPORTATION

DAUPHIN COUNTY
SR 0083 SECTION 094
SEG 0750 OFFSET 0033
SR 8015 (RAMP N) STA 402+81.25
OVER SR 8015 (RAMP L), AMTRAK & NSRR

2-SPAN CONTINUOUS STEEL MULTI-GIRDER BRIDGE
PRELIMINARY TYPE, SIZE & LOCATION
GENERAL PLAN & ELEVATION

PREPARED BY:
HNTB CORPORATION
4507 NORTH FRONT STREET
SUITE 300
HARRISBURG, PA 17110

RECOMMENDED _____

SHEET 1 OF 2

S-40931

| DES: LER | DES CKD: EMG | DWG: JTM | DWG CKD: MKB |
|---|---|---|---|

10/2/2023
FILENAME: 63016-sp-br11-gpe01.dgn

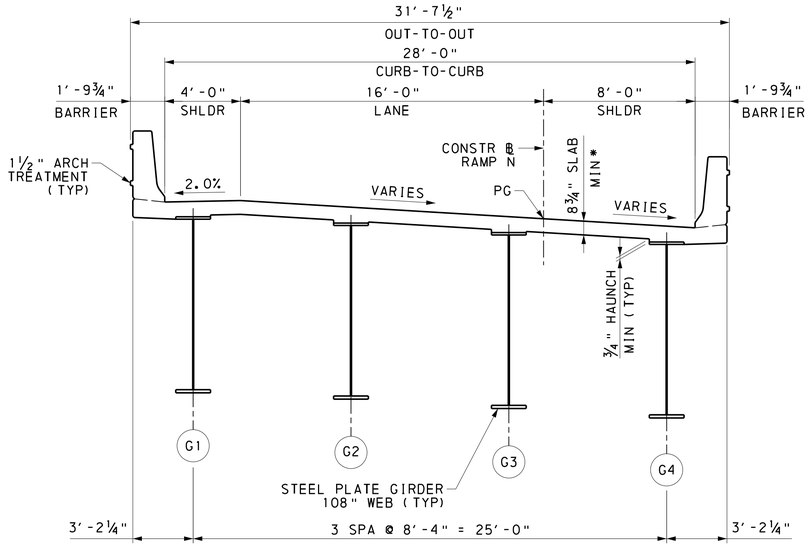


TYPICAL SECTION

2 0 2 4 FEET

* INCLUDES ¾" INTEGRAL WEARING SURFACE

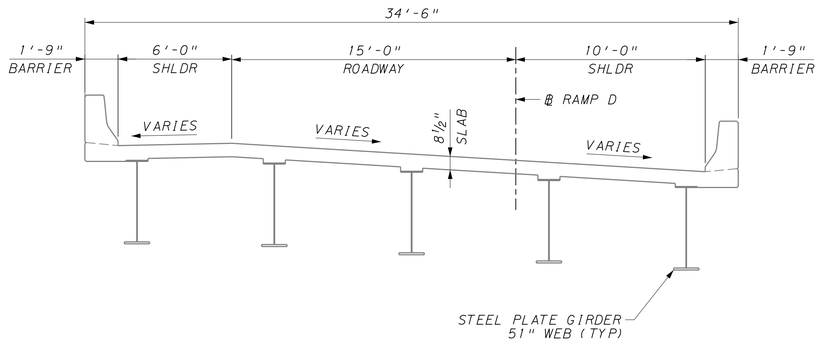


EXISTING TYPICAL SECTION

2 0 2 4 FEET

| Mark | Description | By | Chk'd | Recm'd | Date |
|---|---|---|---|---|---|
| | | | | | |

REVISIONS

SR 0083 PREVIOUSLY KNOWN AS LR 767
BMS STR ID: 22-8015-0750-0033 MPMS/ECMS PROJ: 113376 BRKEY: 69038

HNTB

COMMONWEALTH OF PENNSYLVANIA
DEPARTMENT OF TRANSPORTATION

CONCEPTUAL

DAUPHIN COUNTY
SR 0083 SECTION 094
SEG 0750 OFFSET 0033
SR 8015 (RAMP N) STA 402+81.25
OVER SR 8015 (RAMP L), AMTRAK & NSRR

2-SPAN CONTINUOUS STEEL MULTI-GIRDER BRIDGE
PRELIMINARY TYPE, SIZE & LOCATION
TYPICAL SECTIONS

PREPARED BY:
HNTB CORPORATION
4507 NORTH FRONT STREET
SUITE 300
HARRISBURG, PA 17110

RECOMMENDED _____

SHEET 2 OF 2

S-40931

10/2/2023
FILENAME: 63016-sp-br11-typ01.dgn

| DES: LER | DES CKD: EMG | DWG: JTM | DWG CKD: MKB |
|---|---|---|---|

HARRISBURG
I-83 CAPITAL BELTWAY
SR 0083, SECTION 094
DAUPHIN COUNTY, PA

# Appendix B
## U.S. COAST GUARD CORRESPONDENCE

February 5, 2021

Mr. Hal R. Pitts
Bridge Program Manager
United States Coast Guard
431 Crawford Street
Portsmouth, VA 23704-5004

RE: City of Harrisburg, Dauphin County, Pennsylvania
SR 0083-094 John Harris Memorial (South) Bridge
Over the Susquehanna River

Dear Mr. Pitts,

The proposed State Route (SR) 0083, Section 094 John Harris Memorial (South) Bridge Project, is anticipated to involve the replacement of the existing structure that carries SR 0083 over the Susquehanna River and the Norfolk Southern railroad in Dauphin and Cumberland counties, Pennsylvania (40°14'54.45" N, 76°52'38.23" W). See attached Location Map (Figure 1). The proposed project consists of environmental studies and engineering design for the replacement of the existing structure, which was constructed in 1960 as part of the modernization of the interstate system to connect Baltimore, MD with Harrisburg, PA. In addition to the proposed replacement of the existing SR 0083-094 South Bridge, the project also entails the full depth reconstruction of SR 0083 between the South Bridge and just east of the Exit 41A (PA 581) interchange; the reconfiguration of the SR 0083 Exit 41B (Lemoyne) interchange; the replacement of the existing S. 3rd Street (SR 2035) bridge over SR 0083 and the Norfolk Southern railroad in Lemoyne Borough; the relocation of Lowther Street (SR 2028) east of S. 3rd Street in Lemoyne Borough; and associated stormwater management, lighting, signage, and the consideration of sound walls. The project's eastern terminus is at the common pier for the SR 0083 viaduct (SR 0083, Section 079) and the South Bridge at the edge of the east bank of the Susquehanna River, and extends westward across the river to the western project terminus just east of the Exit 41A interchange.

Primary widening for the new bridge will be to the downstream (south) of the existing bridge, while holding the existing upstream edge. The reason that widening is primarily downstream is due to the presence of the Dock Street Dam immediately upstream of the existing bridge, as well as the aerial easement over Amtrak. Currently, an Aids to Navigation Plan (ATON) is held by the City of Harrisburg, requiring boaters to take out at City Island, located upstream of the Dock Street Dam. Boaters can re-enter the Susquehanna River south of SR 0083 at the Bob McCollum Park near the Susquehanna Club in New Cumberland. This input is approximately 2.5 miles downstream of the existing bridge. An east shore input is at the public Steelton Boat Launch, which is approximately 5 miles downstream.

The project has gone through an alternatives analysis and an alignment was selected. Preliminary design is occurring to refine tie-in of interchange ramps on the West Shore. The SR 0083-079 project, immediately to the east of the bridge, is in Final Design. Permanent impacts to the river will include new piers, though the structure type has not been selected. Causeways are proposed for access during construction. Hydraulic and hydrology calculations are being conducted.

We are requesting a determination of permit requirement from your office. Based on our phone conversation on February 3, 2021, it is our understanding that the project is within the pre-approved reach of the Susquehanna River and a permit will not be required. Your participation in our transportation system in Dauphin County is appreciated. If you have any additional questions regarding this project please contact Derek Mitch, P.E., PennDOT Project Manager at (717)-772-0034 or dmitch@pa.gov.

Sincerely yours,

dmitch

Digitally signed by dmitch
DN: CN=dmitch, OU=USERS, OU=0800, OU=EN0800, OU=HWYADM, OU=PD, OU=CWOPA, DC=FA, DC=LCL
Reason: I am approving this document
Date: 2021.02.05 06:48:31-05'00'

For Chris Drda

Attachments:
Project Location Map

cc. Derek Mitch, PennDOT District 8-0 Project Manager
Doug Knoll, P.E., District Bridge Engineer
J. A. Ames, PennDOT BPD Environmental

U.S. Department of Homeland Security

United States Coast Guard

Commander
United States Coast Guard
Fifth Coast Guard District

431 Crawford Street
Portsmouth, VA 23704-5004
Staff Symbol: dpb
Phone: (757) 398-6422
Fax: (757) 398-6334
Email: Crystal.K.Tucker@uscg.mil
or CGDFiveBridges@uscg.mil

16591
04 MAR 2021

Mr. Derek Mitch
Pennsylvania Department of Transporation
2140 Herr Street
Harrisburg, PA 17103-1699

Dear Mr. Mitch:

Coast Guard review of your proposed project as provided in your letter dated February 5, 2021 from Ms. Barbara W. Weedon with Gannett Fleming, on behalf of the Pennsylvania Department of Transportation, is complete.

Based on the documentation provided and our research, it is determined that a Coast Guard bridge permit will not be required for the proposed highway fixed bridge – John Harris Memorial (South) Bridge over Susquehanna River, mile 68.0, 40.248, -76.877 at, Harrisburg, Dauphin County, PA.

The project will be placed in our Advance Approval category as per Title 33 Code of Federal Regulations Part 115.70. This Advance Approval determination is for the location and structure described above and **is valid for five years from the date of this letter**. The following conditions apply to this determination:

a. If the construction project on the above bridge does not commence within this time, you must contact this office for reaffirmation of this determination.

b. Future bridge projects along the above waterway will have to be independently evaluated before they may be considered for placement in the Advance Approval category. This includes modification, replacement and removal of the above bridge, following its initial construction.

c. Prior to bridge construction, the bridge owner should submit a bridge maintenance project plan to this office at least 30 days (preferably 90 days) prior to work commencing on or over the navigable waterway. Please see enclosure (1).

The fact that a Coast Guard bridge permit is not required does not relieve you of the responsibility for compliance with the requirements of any other Federal, State, or local agency who may have jurisdiction over any aspect of the project. Although the project will not require a bridge permit, other areas of Coast Guard jurisdiction apply. The following conditions apply concerning construction of the above bridge:

a. You or your contractor must notify this office at least 30 days (preferably 90 days) in advance of the start of construction and any other work which may be an obstruction to

navigation, so we may issue and update the information in our Local Notice to Mariners and monitor the project. The notice should include details of the project as described in enclosure (1).

b. At no time during the project will the waterway be closed to navigation without the prior notification and approval of the Coast Guard. The bridge owner or contractor is required to maintain close and regular contact with Coast Guard Sector Delaware Bay at (251) 271-4851or SecDelBayWWM@uscg.mil to keep them informed of activities on the waterway.

c. The lowest portion of the superstructure of the bridge across the waterway should clear the l00-year flood height elevation, if feasible.

d. In addition, the requirement to display navigational lighting at the aforementioned bridge is hereby waived, as per Title 33 Code of Federal Regulations, Part 118.40(b). This waiver may be rescinded at any time in the future should nighttime navigation through the proposed bridge be increased to a level determined by the District Commander to warrant lighting.

The National Ocean Service (NOS) of the National Oceanic and Atmosphere Administration (NOAA) is responsible for maintaining the charts of U.S. waters; therefore, they must be notified of this proposed work. You must notify our office and the NOS at the address below upon completion of the activity approved in this letter. Your notification of project completion must include as-built drawings or certification of the following:

a. Bridge name
b. Action type (new construction, modification, relocation, conversion (fixed/draw), etc.)
c. Dates (commenced and completed)
d. Location (latitude and longitude at bridge center and centerline of channel, statute miles above mouth of waterway, and bridge or causeway orientation or geographic positions of approaches)
e. Type of bridge (fixed, vertical lift, bascule, suspension, swing, trestle, pontoon, etc.)
f. Navigation clearances (vertical at mean high water and horizontal)
(Moveable – vertical at mean high water in open and closed positions)
g. Whether or not the bridge is fitted with clearance gauges
h. Whether or not the bridge has pier protection and/or fender system.
i. Type of land traffic (highway, railroad, pedestrian, pipeline, etc.)

16591
04 MAR 2021

Ms. Sladjana Maksimovic
National Ocean Service
*N/CS26,* Room 7317
1315 East-West Highway
Silver Spring, MD 20910-3282

If you have any further questions, please contact Ms. Crystal K. Tucker at the above listed address or telephone number.

Sincerely,

HAL R. PITTS
Bridge Program Manager
By direction

Encl: (1) Bridge Maintenance Project Plan

Copy: Ms. Sladjana Maksimovic, NOS
Ms. Barbara Weedon, Gannett Fleming
CG Sector Delaware Bay, Waterways Management
U. S. Army Corps of Engineers, Baltimore District
Federal Highways Administration, Harrisburg, PA

# BRIDGE MAINTENANCE PROJECT PLAN

1. The bridge owner, or entity acting on behalf of the bridge owner, should submit a bridge maintenance project plan at least 30 days (preferably 90 days) prior to commencement of work on or over the navigable waterway. Correspondence may be submitted via .pdf email attachment to CGDFiveBridges@uscg.mil or mailed.

2. Once received, the request will be assigned to a project officer for review and processing. The project officer will publish a local notice to mariners. If appropriate, the project officer will publish a temporary deviation from drawbridge operating regulations.

   a. Bridge Information: Provide bridge name, bridge type (highway, railroad, pedestrian, pipeline, etc.), roadway(s) carried, waterway name, mile (statute) on waterway from confluence, municipal location (town/city, county (if applicable/if known), and state).

   b. Project Description: Provide the general description, nature and scope of the project. Drawings may be submitted, particularly if there are any planned temporary reductions in navigation clearances.

   c. Project Dates/Work Hours: Provide primary and alternate (if applicable) project dates and work hours. Alternate dates and work hours may be included to account for inclement weather, etc.

   d. Navigation Clearances: Provide any proposed temporary reductions in navigation clearances (vertical and/or horizontal), including the amount of the reduction(s) in feet and when the reduction(s) will be in place.

   e. Temporary Deviation (from Operating Regulations): For drawbridges – Provide any proposed temporary deviation from operating regulations including: purpose (why it is necessary); dates/times of closure; if the bridge will be closed when bridge work is not being performed, provide justification for closure during non-work hours; whether the bridge will be able to open for an emergency and within how much time of notice; whether vessels may pass through the bridge in the closed position at any time or with prior notice.

   f. Project Resources: Provide list of vessels, barges, equipment and location of personnel involved in the project. Indicate whether the project resources will relocate from the navigation channel during work hours, and if so, provide the timeframe for notice and method of notice. Indicate whether the resources will relocate from the navigation channel during non-work hours, and if not, provide justification for them to remain in the navigation channel during non-work hours.

   g. Communications: Provide communications plan for project resources. This should include VHF-FM channel 13 for vessels and drawbridge tenders and may include mobile phone devices for vessels and project personnel. Vessel operators need to be able to communicate with project resources for safe navigation.

   h. Bridge Owner Information: If the request is submitted by an entity on behalf of the bridge owner, provide the bridge owner representative's contact information (name, telephone and email) and the bridge owner's mailing address for the appropriate office.

HARRISBURG
I-83 CAPITAL BELTWAY
SR 0083, SECTION 094
DAUPHIN COUNTY, PA

# Appendix C
## CULTURAL RESOURCES CORRESPONDENCE

Pennsylvania State Historic Preservation Office
PENNSYLVANIA HISTORICAL AND MUSEUM COMMISSION

March 21, 2019

Brian Thompson, Director
Bureau of Project Delivery
Attn: Jeremy Ammerman, District 8-0
PA Department of Transportation
P.O. Box 2966
Harrisburg, PA 17105

RE: ER 2016-8479-043-U: I-83, Section 0709 (MPMS 97828); I-83 from the Susquehanna River to SR 3013 (29th Street); Harrisburg and Swatara Township, Dauphin County; Determination of Effects: Above Ground Resources

Dear Mr. Thompson,

Thank you for submitting information concerning the above referenced project. The Pennsylvania State Historic Preservation Office (PA SHPO) reviews projects in accordance with state and federal laws. Section 106 of the National Historic Preservation Act of 1966, and the implementing regulations (36 CFR Part 800) of the Advisory Council on Historic Preservation, is the primary federal legislation. The Environmental Rights amendment, Article 1, Section 27 of the Pennsylvania Constitution and the Pennsylvania History Code, 37 Pa. Cons. Stat. Section 500 et seq. (1988) is the primary state legislation. These laws include consideration of the project's potential effects on both historic and archaeological resources.

**Above Ground Resources**
Based on the information received and available within our files, we concur with the findings of the agency that the proposed project will result in an overall finding of **No Adverse Effect** to historic properties. Specifically, we concur that the proposed project will have No Effect on the following properties: Calvary Presbyterian Church (Key No.121109); Capital Roller Rink (Key No.208562); Harrisburg Historic District (Key No.000508); Kohl Brothers Artesian Well Drillers (Key No.208566); Mount Pleasant Historic District (Key No. 064470); Paxton Fire Station (Key No. 102204). We concur that the proposed project will have No Adverse Effect on the following properties: East Shore Diner (Key No. 143137), Pennsylvania Railroad: Main Line (Key No.105675); Philadelphia & Reading Railroad (Key No.112375), and the Harrisburg City Parks 7 Parkway Plan; Capital Area Greenway (Key No. 110669). With regards to the East Shore Diner (Key No. 143137), this No Adverse Effect finding is based upon the proposed plan to relocate the diner to a new location to continue its function as a diner. Please notify our office of the selected relocation once determined. If project plans should change to the degree that the diner cannot be successfully relocated to remain open for business, please notify our office to reopen consultation.

If you need further information concerning this review, please contact Emma Diehl at emdiehl@pa.gov or (717) 787-9121.

Sincerely,

Douglas C. McLearen, Chief
Division of Environmental Review

pennsylvania
DEPARTMENT OF TRANSPORTATION

# PennDOT Section 106 Effects Finding Form

| Combined Early Notification/Finding | | |
|---|---|---|
| YES ☐ | NO ☒ | |
| **SHPO concurrence required or requested:** | | |
| Archaeology: | Yes ☐ | No ☒ |
| Historic Structures: | Yes ☐ | No ☐ |

**MPMS#:** 97828

**COUNTY:** Dauphin

**MUNICIPALITY:** Harrisburg City, Paxton Boro., and Swatara Twp.

**STATE ROUTE:** 83

**SECTION:** 079

**NAME OF PROJECT:** I-83 East Short Section 3

**USGS QUAD NAME:** Harrisburg East, Steelton

**FIELD VIEW DATE:** 7/27/2016

**FUNDING SOURCE:** Federal Highway Funded

**LEAD AGENCY:** FHWA

**SHPO REVIEW NUMBER:** 2016-8479-043

**Project Description (*describe project activities or note attachment*):**

The proposed I-83 East Shore Section 3 project is located in Paxtang Borough, Swatara Township and the City of Harrisburg in Dauphin County. The project begins at the 29th Street overpass and extends westward to the South Bridge over the Susquehanna River. Proposed improvements include widening the mainline I-83 corridor to three through lanes in each direction, including local access connections to Cameron Street, reconstruction and realignment of interchanges, construction of new collector-distributor roads for the interchanges at 19th/17th, 13th and Front/2nd Streets, mainline full reconstruction, replacement of mainline and/or local bridges, and storm water improvements.

-

This submission is a finding for archaeological resources with a determination of no effect to archaeological properties. An above ground cultural resource finding was previously submitted for review on 3/1/2019 with a finding of no adverse effect to above ground properties. The PA SHPO concurred with the above ground finding on 3/21/2019. The overall project finding remains no adverse effect to Historic Properties.

**Finding of Effects:**

- ☐ Project Effects (include Attachments A and B)
- ☒ Archaeological Effects – Partial (include Attachment A)
- ☐ Above-ground Resources Effects – Partial (include Attachment B

pennsylvania
DEPARTMENT OF TRANSPORTATION

| Archaeological Finding: | Project Effects Finding: |
|---|---|
| No Archaeological Properties Affected | No Adverse Effect |
| **Above Ground Finding:** | |
| Choose an item. | |

District Archaeologist: Date: 4/1/2021

Steven McDougal Digitally signed by Steven McDougal
Date: 2021.04.01 10:06:07 -04'00'

District Architectural Historian Date: Click or tap to enter a date.

☐ This project does not have the potential to affect archaeological resources, and, meets all these criteria from Appendix C-Exempted Projects, from the Section 106 Delegation PA:

- The undertaking is limited to the Section 2 List of Exempted Activities by either the District Designee or Cultural Resources Professional
- The undertaking is classified as categorically excluded under EPA
- The undertaking is on an existing transportation facility
- The undertaking is not within or adjacent to a National Historic Landmark or National Park, or property under the jurisdiction of the National Park Service
- The undertaking has no known public controversy based on historic preservation issues
- The undertaking requires no more than 3.6 m (12 ft) of new right-of-way on each side of the road, rail bed, existing trail or pedestrian facility

**Comment:** Click or tap here to enter text.

**[*Do not complete the remainder of Attachment A*]**

**Area of Potential Effect** *(describe dimensions of APE, land use, and type and % of disturbance, if present)*:

The project area is characterized by residential, highway, commercial, and industrial development in the City of Harrisburg, Paxtang Borough and Swatara Township, PA. The terrain is mostly rolling, and the I-83 roadway transitions between cut and fill roadway sections according to the local terrain. The project area is heavily urbanized and includes residential housing, several car dealerships, gas stations (including present and former), other service oriented businesses, and commercial and industrial buildings. The Norfolk Southern Railway traverses through the project area, just north of and parallel to the I-83 corridor and Amtrak rail lines run perpendicular to I-83 between Cameron Street and Front Street. The Steelton Secondary rail spur also extends perpendicular to I-83 near Paxton Creek and is owned and operated by Norfolk Southern Railway. There are numerous potential waste sites located within the project area as well. There is an abandoned quarry pit near the project area which is being filled in by the land owner. There is no agricultural land use within the project limits. The project lies within the Susquehanna River Watershed and several of its tributaries (Spring Creek and Paxton Creek) are located throughout the project area. The Limit of Disturbance for this project is 88.96 acres (36 hectares) in size of which 24.73 acres (9.9 hectares) were determined to necessitate archaeological survey.

**Background Research Sources Checked:**

- ☒ CRGIS/PASS Files *(list Known Archaeological Sites below)*
- ☒ Historic Maps *(list)*:
  1884, 1901, USGS 1892, 1899, 1906, 1924, 1943
- ☒ USDA- SGS/NRCS County Soils Map(s) *(list soils in APE)*:
  Urban Land, Hagerstown silt loam
- ☒ Stream Order *(if stream present)*:
  8th order stream
- ☒ Other *(list)*:
  Watershed (7)C Lower Susquehanna River; Great Valley Section

**Known Archaeological Sites** *(List PASS number and National Register determination [if known]. Do not release site locations to the public.)*:

No sites recorded within the APE prior to archaeological survey for this project.

**Consultation with Federally Recognized Tribes & Nations, Consulting Parties and the Public:**

This document will be posted to PennDOT's PATH website where it will be available for review and comment for 30 days. PennDOT is requesting consultation from the following tribes and nations: Absentee-Shawnee Tribe of Oklahoma, Cayuga Nation, Delaware Nation, Delaware Tribe, Eastern Shawnee Tribe of Oklahoma, Oneida Nation, Onondaga Nation, Seneca-Cayuga Nation, Shawnee Tribe, and Tuscarora Nation.

**Archaeological potential** (explain probability and likely location(s) for sites based on the background research, field view, and consultation)**:**

- Pre-Contact: Review of SHPO records and a scoping field view found most of the project area to be previously disturbed by residential, commercial, industrial, and transportation related development over the 19th and 20th centuries. Three areas were, however, determined to have potential for precontact archaeological resources in locations either not disturbed by development or below historic disturbances.
- Historic: Review of historic mapping and a scoping field view found most of the project area previously disturbed by residential, commercial, industrial, and transportation development. Three areas, though, were found to have potential for historic archaeological resources

**National Register Eligibility Determination for Site(s) Identified in APE** (include site Name(s) & Number(s))**:**

- ☒ Not Eligible: 36DA0271 (Metzgar-McCormick-Lewis Site)
- ☐ Eligible: Click or tap here to enter text.
- ☐ Undetermined: Click or tap here to enter text.

**Archaeology Finding:**

- ☒ No Archaeological Properties Affected
  - ☒ No Archaeological Properties Affected
  - ☐ Archaeological Properties Present but Not Affected
- ☐ No Adverse Effect
  - ☐ Site protected with geotextile and fill during construction
  - ☐ Site protected with fencing or other barrier during construction
- ☐ Adverse Effect

**Effects Explanation:**

Based on background research and a scoping field view, archaeological survey was undertaken for this project. Most of the project APE has been previously disturbed by 19th and 20th century residential, commercial, industrial, and transportation related development; however, three areas within the APE (labeled A, B, and C) were determined to have archaeological potential. Area A is located on the Susquehanna floodplain and was subject to geomorphological reconnaissance to determine if deep alluvial deposits were present which could contain buried archaeological sites. This area was found to be disturbed by industrial and railroad development such that no soils with archaeological potential are present. Based on this information, Phase I archaeological survey was not conducted in this area. Areas B and C are located on non-alluvial terrace landforms and were subject to Phase I archaeological survey. Historic archaeological site 36DA0271 (Metzgar-McCormick-Lewis Site) was found and recorded in Area B. Based on the Phase I survey results, site 36DA0271 does not retain archaeological integrity or provide potential for information important to our understanding of history. On behalf of the Federal Highway Administration, PennDOT has determined that site 36DA0271 is not eligible for inclusion on the National Register of Historic Places. No archaeological sites were found in Area C. Based on the results of the Phase I archaeological survey, no further archaeological investigations will be conducted for this project as currently planned. On behalf of the Federal Highway Administration, PennDOT has determined that this project will have no effect to archaeological properties.

**Attachments:**

- ☐ Project Plans
- ☐ PHMC Negative Survey Form
- ☐ PHMC Record of Disturbance Form
- ☐ Geomorphology Report
- ☐ Archaeology Sensitivity Report (Phase IA)
- ☒ Archaeology Identification (Phase I) Report
- ☐ Archaeology Identification and Evaluation (Phase I & II) Report
- ☐ Other *(List)*:

  Click or tap here to enter text.

June 15, 2021

Brian Thompson, Director
Bureau of Project Delivery
Attn: Jeremy Ammerman, District 8-0
PA Department of Transportation
P.O. Box 2966
Harrisburg, PA 17105

RE: ER #2021PR02808.029; S.R. 83, Section 094 (MPMS 113754); I-83 South Bridge Replacement Project; Harrisburg, Dauphin County; Identification of Above Ground Historic Properties – Additional Information

Dear Mr. Thompson,

Thank you for submitting information concerning the above referenced project. The Pennsylvania State Historic Preservation Office (PA SHPO) reviews projects in accordance with state and federal laws. Section 106 of the National Historic Preservation Act of 1966, and the implementing regulations (36 CFR Part 800) of the Advisory Council on Historic Preservation, is the primary federal legislation. The Environmental Rights amendment, Article 1, Section 27 of the Pennsylvania Constitution and the Pennsylvania History Code, 37 Pa. Cons. Stat. Section 500 et seq. (1988) is the primary state legislation. These laws include consideration of the project's potential effects on both historic and archaeological resources.

**Above Ground Resources**
Based on the information received and available within our files, we offer the following comments regarding the identification of above ground historic properties.

**Riverton (Resource #2021RE00316):** Thank you for providing the requested information. Based on the additional information received and available within our files, we concur with the findings of the agency that the Riverton subdivision is Not Eligible for listing under Criteria A, B, or C due to a lack of significance.

**Apartment Building, 450 S. 3rd Street (Resource #2021RE00331):** Thank you for providing the requested information. Based on the additional information received and available within our files, we concur with the findings of the agency that the Apartment Building at 450 S. 3rd Street is Not Eligible for listing under Criteria A, B, or C due to a lack of significance.

**Westover Terrace (Resource # 2021RE01023):** Thank you for providing the requested information. Based on the additional information received and available within our files, we concur with the findings of the agency that the Westover Terrace is Not Eligible for listing under Criteria A, B, or C due to a lack of significance. Please note there may be individually eligible properties within the neighborhood, but we recognize it is beyond the scope of the project and the potential effects to request additional information.

Our determination of eligibility is based upon the information provided and available in our files for review. If National Register listing for any of the properties named above is sought in the future, additional documentation of the property's significance and integrity may be required to both verify this determination of eligibility and satisfy the requirements of the National Park

Service (36 CFR Part 60). Thus, the outcome of the National Register listing process cannot be assured by this determination of eligibility.

For questions and/or additional questions concerning this review, please contact Emma Diehl at emdiehl@pa.gov or (717) 787-9121.

Sincerely,

Douglas C. McLearen, Chief
Division of Environmental Review

Pennsylvania State Historic Preservation Office
PENNSYLVANIA HISTORICAL AND MUSEUM COMMISSION

August 20, 2021

Jeremy Ammerman
PennDOT BPD EPDS
2140 Herr Street
Harrisburg PA 17103

RE: ER Project # 2021PR02808.036, I-83 South Bridge Replacement, Department of Transportation (PennDOT), Harrisburg City, Dauphin County

Dear Jeremy Ammerman :

Thank you for submitting information concerning the above referenced project. The Pennsylvania State Historic Preservation Office (PA SHPO) reviews projects in accordance with state and federal laws. Section 106 of the National Historic Preservation Act of 1966, and the implementing regulations (36 CFR Part 800) of the Advisory Council on Historic Preservation, is the primary federal legislation. The Environmental Rights amendment, Article 1, Section 27 of the Pennsylvania Constitution and the Pennsylvania History Code, 37 Pa. Cons. Stat. Section 500 et seq. (1988) is the primary state legislation. These laws include consideration of the project's potential effects on both historic and archaeological resources.

**Above Ground Resources**
*No Above Ground Concerns - Environmental Review - No Adverse Effect - Above Ground*

Based on the information received and available within our files, we concur with the findings of the agency that the proposed project will have No Adverse Effect on above ground historic properties. Specifically, we concur that the proposed project will have No Effect on the Pennsylvania Railroad: Mainline (Philadelphia to Harrisburg), West Shore National Bank of Lemoyne; Grace Evangelical Church; and Henry T. Simmons House and No Adverse Effect on the following: Harrisburg Historic District, Pennsylvania Railroad: Enola Branch Low Grade Freight Line (Enola to Parkesburg); Harrisburg City Parks 7 Parkway Plan; and the Philadelphia & Reading Railroad: Harrisburg & Pittsburgh Branch. Should the scope of the project change and/or should you be made aware of historic property concerns, you will need to notify the PA SHPO at pashare@pa.gov and provide the revised designs for review and comment.

For questions concerning above ground resources, please contact Emma Diehl at emdiehl@pa.gov.

**Archaeological Resources**

For questions concerning archaeological resources, please contact Sara-Ladd Clark at saralclark@pa.gov.

Sincerely,



Andrea MacDonald
Director, State Historic Preservation Office

pennsylvania
DEPARTMENT OF TRANSPORTATION

# PennDOT Section 106 Effects Finding Form

| Combined Early Notification/Finding | | |
|---|---|---|
| YES ☐ | NO ☒ | |
| **SHPO concurrence required or requested:** | | |
| Archaeology: | Yes ☐ | No ☒ |
| Above Ground: | Yes ☒ | No ☐ |

**MPMS#:** 113754

**COUNTY:** Dauphin

**MUNICIPALITY:** Harrisburg City

**STATE ROUTE:** 0083

**SECTION:** 094

**NAME OF PROJECT:** I-83 South Bridge Replacement

**USGS QUAD NAME:** Lemoyne

**FIELD VIEW DATE:** 8/25/2020

**FUNDING SOURCE:** Federal Highway Funded

**LEAD AGENCY:** FHWA

**SHPO REVIEW NUMBER:** 2021PR02808 (old SHPO# 2020-8301-043)

**Project Description (*describe project activities or note attachment*):**

The S.R. 0083-094 project consists of the replacement of the existing John Harris Memorial (South) Bridge, which carries S.R. 0083, Section 094 (I-83) over the Susquehanna River and the Norfolk Southern Railroad connecting Dauphin and Cumberland counties, Pennsylvania. The project also entails the full depth reconstruction of I-83 between the South Bridge and just east of the Exit 41A (PA 581) interchange; the reconfiguration of the I-83 Exit 41B (Lemoyne) interchange; the replacement of the existing S. 3rd Street bridge over I-83 and the Norfolk Southern Railroad in Lemoyne Borough; the relocation of Lowther Street (SR 2028) east of S. 3rd Street (SR 2035) in Lemoyne Borough; and associated stormwater management, lighting, signage, and the consideration of sound walls. The project's eastern terminus is at the common pier for the I-83 viaduct (S.R. 0083, Section 079) and the South Bridge at the edge of the east bank of the Susquehanna River, and extends westward across the river to the western project terminus just east of the Exit 41A interchange. The proposed primary components of the project are briefly discussed below.

The existing I-83 South Bridge is a riveted steel structure that was constructed in 1960 to carry two-way traffic on I-83 over the Susquehanna River. In 1982, a welded steel structure was built immediately to the south of the first bridge to accommodate increased traffic demands. The 1982 structure now carries northbound traffic, while the original structure carries the southbound traffic. Currently the I-83 South Bridge carries four northbound and three southbound lanes. It is anticipated that the proposed new bridge will consist of a new four lane structure, plus one

auxiliary lane in each direction in the final configuration. Traffic will be maintained on I-83 during construction by constructing the northbound lanes of the new bridge immediately to the south of the existing bridge. Traffic would then be shifted to the newly constructed structure, allowing for the removal and construction of the new southbound lanes where the existing bridge sits. It should be noted that the on and off ramps from the bridge to 2nd Street (Exit 43) in Harrisburg are to be replaced as part of the S.R. 0083, Section 079 East Shore Section 3 project, immediately adjacent to the east.

Due to the widening of the new structure downstream of the existing structure, a new bridge centerline is created. Modifications to the Exit 41B, Lemoyne Interchange, are needed to meet the new centerline. The exit ramp from I-83 southbound to Lemoyne is Ramp X. Ramp X from southbound I-83 to Lemoyne will be reconfigured. Ramp X will no longer pass under I-83; it will be shifted to the north, crossing over the Norfolk Southern Railroad on a new structure and creating a new intersection with S. 3rd Street.

The current S. 3rd Street Bridge over I-83 is not long enough to accommodate the new four lanes of traffic on I-83 plus an auxiliary lane. Therefore, the S. 3rd Street Bridge will be replaced with a longer structure. An offline replacement of the S. 3rd Street bridge is proposed to allow for traffic to be maintained on the existing bridge during construction. By providing a longer S. 3rd Street Bridge over I-83, a northbound I-83 on-ramp from Lemoyne to I-83 can be relocated and reconstructed at its previous location at the Lowther Street/Maple Street intersection. The S. 3rd Street Bridge carries State Bike Route J and is an important bicycle and pedestrian link between Lemoyne and the surrounding communities, including Harrisburg. The bridge replacement will upgrade and improve existing bicycle and pedestrian facilities on the bridge by widening the bridge from its existing three lanes with inconsistent variable shoulder widths and one sidewalk adjacent to the southbound travel lane to four 11-foot lanes with consistent 5-ft shoulders and 5-ft sidewalks on both sides of the bridge.

Lowther Street, east of S. 3rd Street, will be shifted slightly south to accommodate the additional I-83 northbound lanes leading to the new, wider South Bridge. The current shift of Lowther Street avoids displacements, while still providing access to several properties at the eastern end of Lowther Street and the Lemoyne Borough Wastewater Treatment Facility.

**Finding of Effects:**

- ☒ Project Effects (include Attachments A and B)
- ☐ Archaeological Effects – Partial (include Attachment A)
- ☐ Above-ground Resources Effects – Partial (include Attachment B

pennsylvania
DEPARTMENT OF TRANSPORTATION

| Archaeological Finding: | Project Effects Finding: |
|---|---|
| No Archaeological Properties Affected | No Adverse Effect |
| **Above Ground Finding:** | |
| **No Adverse Effect** | |

District Archaeologist: Date: 8/2/2021

Steven McDougal Digitally signed by Steven McDougal
Date: 2021.08.02 09:35:10 -04'00'

District Architectural Historian Date: 8/2/2021

Jeremy Ammerman Digitally signed by Jeremy Ammerman
Date: 2021.08.02 11:27:01 -04'00'

pennsylvania
DEPARTMENT OF TRANSPORTATION

# Archaeological Resources Attachment – A

☐ This project does not have the potential to affect archaeological resources and meets all the following criteria from Appendix C of the Section 106 Delegation PA:

- The undertaking is limited to the activities specified under Level 1 and 2 of the Appendix C
- The undertaking is classified as categorically excluded under NEPA
- The undertaking is on an existing transportation facility
- The undertaking is not within or adjacent to a National Historic Landmark or National Park, or property under the jurisdiction of the National Park Service
- The undertaking has no known public controversy based on historic preservation issues
- The undertaking requires no more than 3.6 m (12 ft) of new right-of-way on each side of the road, rail bed, existing trail or pedestrian facility

**Comment:** Click or tap here to enter text.

**[*Do not complete the remainder of Attachment A*]**

## Archaeological Area of Potential Effect:

The project area is characterized by residential, highway, commercial, and industrial developments in the City of Harrisburg and Lemoyne Borough, PA. The terrain is mostly rolling and the I-83 roadway bridge approaches are mostly in fill. The project area is heavily urbanized and includes residential housing, gas stations (including present and former), other service-oriented businesses, and commercial and industrial buildings. The Norfolk Southern Railway passes under the western end of the bridge, with a spur located adjacent to the western bridge approach. The Lemoyne Borough wastewater treatment facility is located in the northwest project quadrant. The Front Street Sewage Pump Station is located in the northeast project quadrant, at the east end of the bridge on the north side of I-83. An inactive (and overgrown) quarry is located in the southwest quadrant.

The APE for archaeology (or limit of disturbance) is 351 acres (140.4 hectares).

## Background Research Sources Checked:

☒ SHPO Cultural Resources GIS

☒ Historic Maps *(list)*:
USGS 1906, 1924, 1943

# Archaeological Resources Attachment – A

☒ USDA- SGS/NRCS County Soils Map(s):
Urban Land; Quarry Land; Hagerstown silt loam, well drained

☒ Stream Order *(if stream present)*:
8th Order

☒ Other *(list)*:
Watershed (7)C, Lower Susquehanna River; Watershed (7)E Lower Susquehanna River; Great Valley Section of the Ridge and Valley Physiographic Province

**Known Archaeological Sites:**

36CU0194 (Lemoyne Borough Memorial Park Site)

**Consultation with Federally Recognized Tribes & Nations, Consulting Parties and the Public:**

This document will be posted to PennDOT's PATH website where it will be available for review and comment for 30 days. PennDOT has requested consultation from the following tribes and nations: Absentee-Shawnee Tribe of Oklahoma, Cayuga Nation, Delaware Nation, Delaware Tribe, Eastern Shawnee Tribe of Oklahoma, Onondaga Nation, Seneca-Cayuga Nation, Shawnee Tribe, and Tuscarora Nation.

**Archaeological potential:**

- Pre-Contact: Based on review of SHPO records and the statewide precontact archaeological model, the APE for this project has high potential for the presence of precontact archaeological sites. National Register eligible site 36Cu194 (Lemoyne Borough Memorial Park Site) is located within the overall project APE used for the purposes of visual and aerial effects to above ground cultural resources. Site 36Cu194 is not, however, within the limit of disturbance (also called the APE for archaeology) so it will not be impacted by this project in any way. Review of aerial photographs and a scoping field view found that most of the limit of disturbance has been disturbed by previous highway, bridge, and railroad construction and residential, commercial, and industrial development. The only areas with potential to be undisturbed lie within the southwest project quadrant.

# Archaeological Resources Attachment – A

- Historic: Based on review of historic mapping and a scoping field view, this project has potential for historic archaeological sites. As described just above, most of the project area has been previously disturbed by highway, bridge, and railroad construction and residential, commercial, and industrial development. The only undisturbed areas with historic archaeological potential are in the southwest project quadrant.

**National Register Eligibility Determination for Site(s) Identified in APE:**

- ☐ Not Eligible: Click or tap here to enter text.
- ☐ Eligible: Click or tap here to enter text.
- ☐ Undetermined: Click or tap here to enter text.

**Archaeology Finding:**

- ☒ No Archaeological Properties Affected
  - ☒ No Archaeological Properties Present
  - ☐ Archaeological Properties Present but Not Affected
- ☐ No Adverse Effect
  - ☐ Site protected with geotextile and fill during construction
  - ☐ Site protected with fencing or other barrier during construction
- ☐ Adverse Effect

**Effects Explanation:**

Based on review of historic mapping and SHPO records, this project has archaeological potential. One known National Register eligible archaeological site (36Cu194) is located within the larger APE for visual and aerial effects; however, the site is not located within the limit of disturbance and it will not be impacted by this project in any way. Within the limit of disturbance, most of the project area has been previously disturbed by earlier highway, bridge, and railroad construction and residential, commercial, and industrial development. The one portion of the project area within the limit of disturbance with potential for undisturbed soils was the southwest quadrant. Geomorphological reconnaissance was conducted followed by archaeological survey. Much of the area surveyed was found to be disturbed and what little undisturbed land was found tested negative for the presence of archaeological sites. A Phase I archaeological survey report was submitted to SHPO in a previous PennDOT posting and is available on PennDOT PATH and PA SHARE for review. No further

archaeological investigations are recommended for this project as currently planned. PennDOT has determined that this project will have no effect to archaeological properties.

**Attachments:**

- ☒ Project Plans
- ☐ SHPO Negative Survey Form
- ☐ SHPO Record of Disturbance Form
- ☐ Geomorphology Report
- ☐ Archaeology Sensitivity Report (Phase IA)
- ☐ Archaeology Identification (Phase I) Report
- ☐ Archaeology Identification and Evaluation (Phase I & II) Report
- ☐ Other *(List)*:

  Click or tap here to enter text.

# Above Ground Resources – B

☐ This project does not have the potential to affect above-ground resources and meets all the following criteria from Appendix C of the Section 106 Delegation PA:

- The undertaking is limited to the activities specified under Level 1 and 2 of the Appendix C
- The undertaking is classified as categorically excluded under NEPA
- The undertaking is on an existing transportation facility.
- The undertaking is not within or adjacent to a National Historic Landmark or National Park, or property under the jurisdiction of the National Park Service
- The undertaking has no known public controversy based on historic preservation issues

**Comment:** Click or tap here to enter text.

***[Do not complete the remainder of Attachment B]***

## Above Ground Area of Potential Effect:

The Area of Potential Effects (APE) for the project is an irregularly shaped polygon, which was drawn to account for potential physical, visual, and auditory impacts to historical properties. The APE can be roughly divided into four sections. These are: a section on the east shore of the Susquehanna River in Harrisburg City; a section known as Riverton, located between the former Philadelphia & Reading Railroad and North Central Railroad tracks in Lemoyne; a section over the Susquehanna River; and, the South Lemoyne/Lower Walton section, located south of the former Philadelphia & Reading Railroad and I-83.

On the Harrisburg City side of the bridge, the APE extends as far east as the tracks of the former Pennsylvania Railroad (now Amtrak), and extends from Sycamore Street in the south to Paxton Street and the former Philadelphia & Reading Railroad Bridge in the north. Over the Susquehanna River, the APE extends from a line struck west from Sycamore Street in the south, to the Philadelphia & Reading Railroad Bridge in the north. On the Lemoyne Borough side of the bridge, the southern edges of the APE extend, from east to west, along a boundary line south of Carol Street and Carol Place, north on Warren Street, along the property lines between Walton Street and Clark Street, along the property lines between Lowther Street and Walton Street west of S. 3rd Street, along Lowther Street and Brandt Avenue, with the western edge along S. 10th Street near Ayers Avenue. From the western edge, the northern boundary extends, from west to east, along Ayers Avenue, the right-of-way of the former Philadelphia & Reading Railroad, north on S. 5th Street, along Plum Street, north on S. 4th Street, along Peach Street, north to Apple Alley, along Apple Alley to east of S. 3rd Street before turning south, then east along Peach Street to Memorial Park, then encompassing the entirety of Memorial Park. The entire parcel of Memorial Park was included in the APE; however, any impacts to the park will only be visual/auditory in nature. No physical impacts are planned for any portion of Memorial Park. A visual representation is attached below.

# Above Ground Resources – B

**Background Research Sources Checked:**

- ☒ SHPO Cultural Resources GIS
- ☒ Historic Maps:
  See attached
- ☐ State Archives
- ☒ Other (*list*):
  Historic Aerials

**Previously Recorded and Evaluated Resources:**

Harrisburg Historic District (listed, 1976RE00189), Pennsylvania Railroad: Enola Branch Low Grade Freight Line (eligible, 1994RE01133), Pennsylvania Railroad: Mainline (eligible, 1995RE45037), Harrisburg City Parks 7 Parkway Plan (eligible, 1996RE00290)

**National Register Eligibility Determination for Resources Identified in APE:**

- ☐ Not Eligible: Waldon Terrace (2021RE00315), Lower Walton Subdivision (2021RE00317), 350 S. 7th Street (2021RE00321), Nationwide Inn (2021RE00322), 308 S. 10th Street (2021RE00323), 347 Lowther Street (2021RE00324), Front Street Sewage Pumping Station (2021RE00327), Firestone Motors Salvage Yard (2021RE00328), C. S. Willis & Sons Feed Mill (2021RE00318), 300 S. 3rd Street (2021RE00319), S.B. Leach Building (2021RE00320), Jacob A. Kunkel Building (2021RE00325), Dr. John Bowman Building (2021RE00329), Citizen's Fire Company No. 1 (2021RE00330), Riverton (2021RE00316), and 450 S. 3rd Street (2021RE00331)
- ☒ Eligible: West Shore National Bank of Lemoyne (2021RE00332), Grace United Evangelical Church (2021RE00326), Harrisburg & Pittsburgh Branch (2021RE00355), and Philadelphia and Reading Railroad: Philadelphia, Harrisburg. & Pittsburgh (2021RE00355)

**Above Ground Finding:**

- ☐ No Above Ground Properties Affected
  - ☐ No Above Ground Properties Present
  - ☐ Above Ground Properties Present but Not Affected

# Above Ground Resources – B

☒ No Adverse Effect
☐ Adverse Effect

**Effects Explanation:**

As part of PennDOT's identification of historic resources for the South Bridge Project twenty resources were evaluated to determine their eligibility for inclusion in the National Register of Historic Places. Following a consulting party meeting held on March 29, 2021 an additional resource was evaluated. Eight historic properties are located within the project APE: the Harrisburg Historic District; the Pennsylvania Railroad: Enola Branch Low Grade Freight Line (Enola to Parkesburg); the Pennsylvania Railroad: Mainline (Philadelphia to Harrisburg); the Harrisburg City Parks 7 Parkway Plan; the West Shore National Bank of Lemoyne; the Philadelphia & Reading Railroad: Harrisburg and Pittsburg Branch; Grace United Evangelical Church; and, the Henry T. Simmonds House.

Based on the application of the definition of effect, four properties may be affected by the project: the Harrisburg Historic District, the Pennsylvania Railroad: Enola Branch Low Grade Freight Line, the Harrisburg City Parks 7 Parkway Plan, and the Philadelphia & Reading Railroad: Harrisburg & Pittsburg Branch.

For the Harrisburg Historic District the new replacement bridge project will not result in the removal of any structure contributing to the district. The new replacement structure will have a slightly taller profile than the existing South Bridge but will not alter the aspects of the setting which contribute to the district's historic significance. As part of the design process the team is proposing a more open design to increase visibility across the Susquehanna River to enhance the existing setting. A slight increase in ambient noise within the Historic District is expected as noise studies for the project demonstrated a 1 decibel increase. However, because of existing noise wall performance, and the slight increase in noise levels, no new noise mitigation will be introduced with or adjacent to the historic district. Therefore, the South Bridge Replacement Project will have no adverse effect upon the Harrisburg Historic District.

Pennsylvania Railroad: Enola Low Grade Freight Line extends between Enola, Cumberland County to Parkersburg, Lancaster being constructed between 1902 and 1906. Within the APE for the South bridge Project the Pennsylvania Railroad Low Grade Freight Line consists of two sets of tracks, timber ties, and stone ballast, all which are considered uncounted features of the property type in accordance to Pennsylvania Historical and Museum Commission (PHMC) Railroad's guidance. The project will require temporary access across the railroad to facilitate construction activities for the duration of the 6-year project. This crossing will be gate controlled to prevent interruption of train traffic for the line. Fill will be placed on both sides of the crossing and a sheet pile wall will be installed west of the railroad grade but will be removed and restored following completion of the project. Visual changes and noise impacts will not alter the

important features vital to its eligibility, therefore the South Bridge Project will have no adverse effect upon the Pennsylvania Railroad: Enola Low Grade Freight Line.

Harrisburg City Parks 7 Parkway Plan was determined eligible in 1966. The resource consists of a comprehensive network of parks around the city of Harrisburg in a ring as part of the City Beautiful Movement. Within the APE for the South Bridge Project both the upper and lower tails, concrete steps leading from the lower trail to the Susquehanna River. The current bridge and viaduct associated with I-83 ate within the boundary for the resource but are considered non-contributing. Spanning over the existing bike and pedestrian trail carrying the Harrisburg City Parks 7 Parkway Plan will result in a temporary closure to facilitate construction activities. Users will be redirected to South Front Street but upon the completion of construction the trail will return to its original alignment. Visual element of the trail including its viewshed with the river will remain unchanged as part of the project. 1 Decibel noise increase although a slight increase over existing noise levels, will not dimmish the integrity of the property's significant historic features. As such, the South Bridge Project will have no adverse effect upon the Harrisburg City Parks 7 Parkway Plan.

Philadelphia and Reading Railroad: Harrisburg & Pittsburg Branch was determined eligible with a period of significance of 1871-1976 as part of the South Bridge Project's historic properties identification process. Within the APE, character defining features include the bridge carrying the grade over the Susquehanna River. As part of the project the bridge which carries S. 3rd Street over the railroad will be widened and replaced. Aerial easements over the railroad are required and mall amount of temporary construction easement are needed as part of the project. Most of the construction activities will occur from properties adjacent to railroad boundary to minimize impacts to Norfolk Southern (current operator). Disruptions to the operation will be coordinated using railroad flaggers. Any temporary construction activities will be restored to preexisting or improved condition following completion of the project. Realignment and widening of S. 3rd Street will introduce a new visual element over the railroad but no significant historical features associated with the railroad are within the project's APE and the setting of the resource was not identified as a character defining feature. The South Bridge Project will have no adverse effect upon the Philadelphia & Reading Railroad: Harrisburg & Pittsburg Branch.

Driven by the visibility of the South Bridge Project along with its proximity to numerous historic resources a concentrated effort by PennDOT was utilized to identify historic resources. A total of twenty-one previously unidentified resources were evaluated for their eligibility for listing in the National Register of Historic Places. Consulting Parties were solicited electronically through PATH on September 9, 2020. A subsequent mailing occurred on February 23, 20201 that included 454 letters to properties within the project APE. On March 18, 2021 all consulting parties received a copy of the reconnaissance survey and Pennsylvania Historic Resource Forms via PATH. Two meetings with consulting parties occurred as part of the South bridge Project. The first was at the request of the Shipoke Neighborhood Association to discuss

the project virtually on March 22, 2021. The second meeting for all consulting parties was held on March 30, 2021 which resulted in further resource evaluation efforts. Minutes for both consulting party meeting are available through PATH and were distributed to all consulting parties for review and comment.

Minimization efforts have been identified early in the project development process for the South Bridge Project. Four different bridge designs have been proposed for the replacement bridge, all having a focus on creating a visual openness across the Susquehanna River. A second minimization effort is the effort to maintain access to the Harrisburg City Parks 7 Parkway Plan by temporarily relocating a portion of the path to Front Street during construction activities. As seen above the South Bridge project will have no adverse effect upon four historic properties within the APE, the remaining four properties will not be affected (see effects report for more information). Therefore, the South Bridge Project will conclude in a finding of No Adverse Effect.

**Attachments:**

- ☐ Historic Resource Survey Record(s)
- ☐ Identification and Evaluation Report
- ☐ Rehabilitation Analysis
- ☒ Determination of Effect Tables
- ☒ Determination of Effect Report
- ☐ Other (*list)*

  Click or tap here to enter text.

**Additional Comments:**
**Dauphin 113754 SR 83-94 I-83 South Bridge Replacement Project**

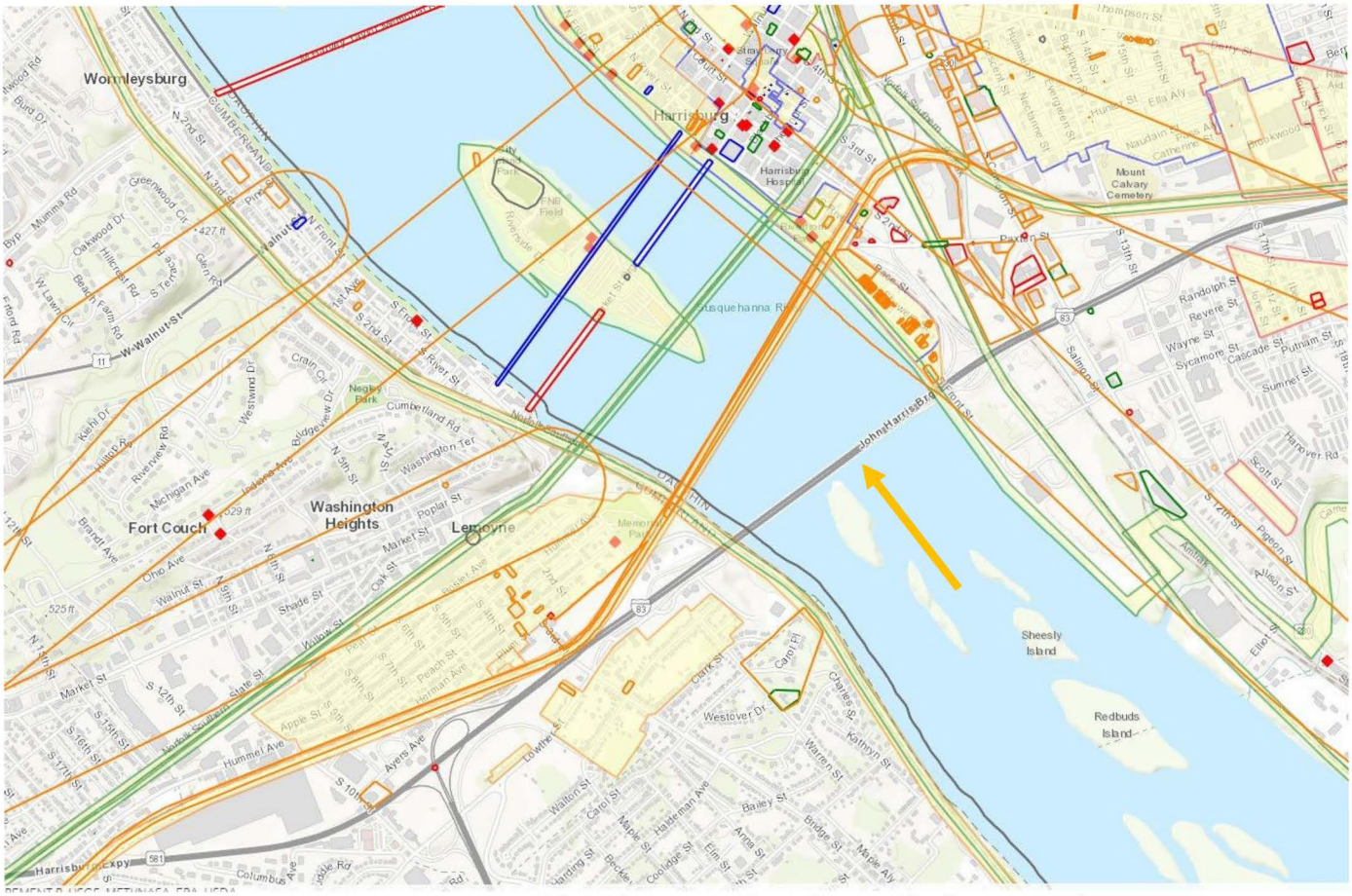


PA SHARE topographic layer showing historic properties. Currently the map shows properties evaluated as part of the South bridge project as undetermined (orange). Bridge location identified through goldenrod colored arrow.

**Dauphin 113754 SR 83-94 I-83 South Bridge Replacement Project**

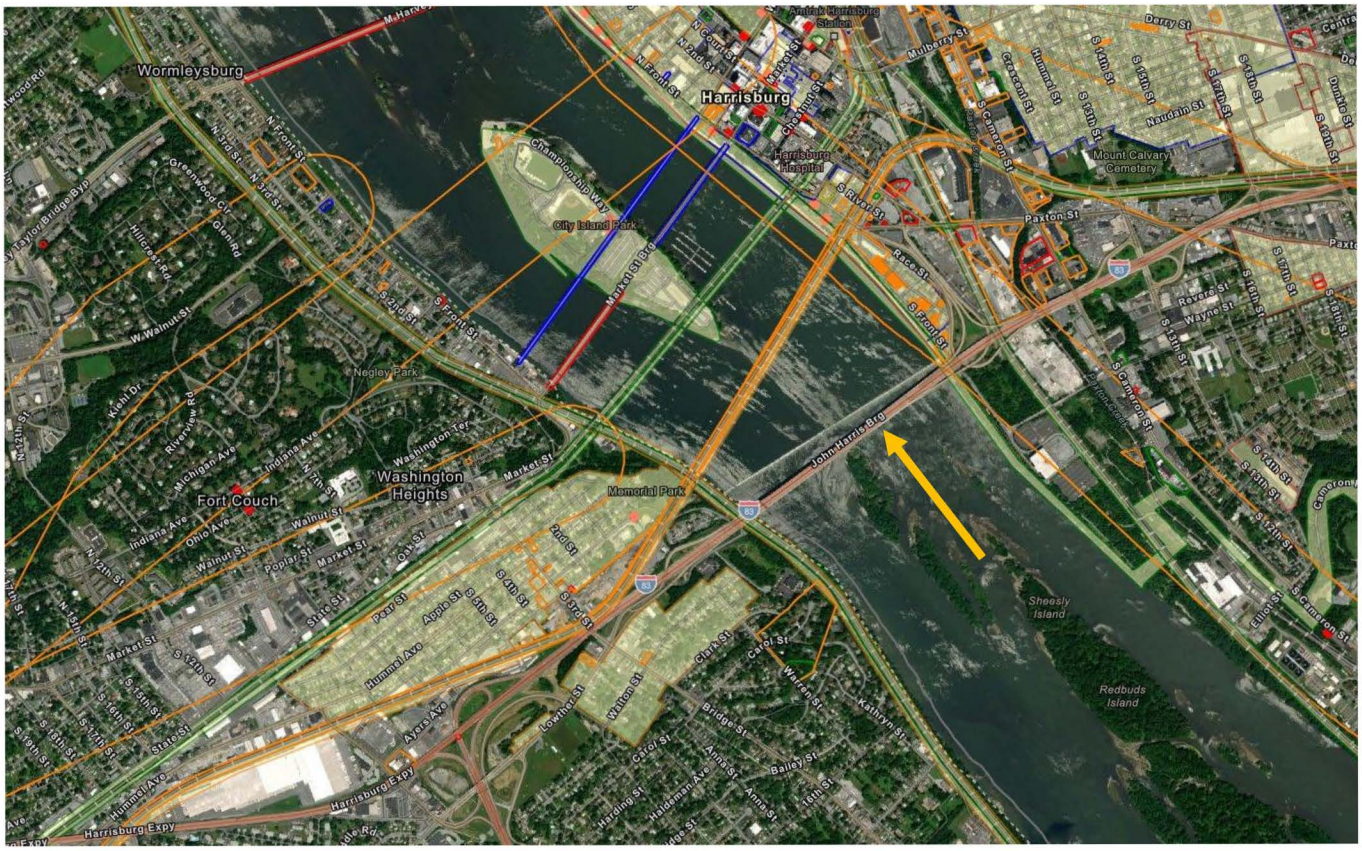


PA SHARE aerial imagery layer showing historic properties. Currently the map shows properties evaluated as part of the South bridge project as undetermined (orange). Bridge location identified through goldenrod colored arrow.

## Dauphin 113754 SR 83-94 I-83 South Bridge Replacement Project

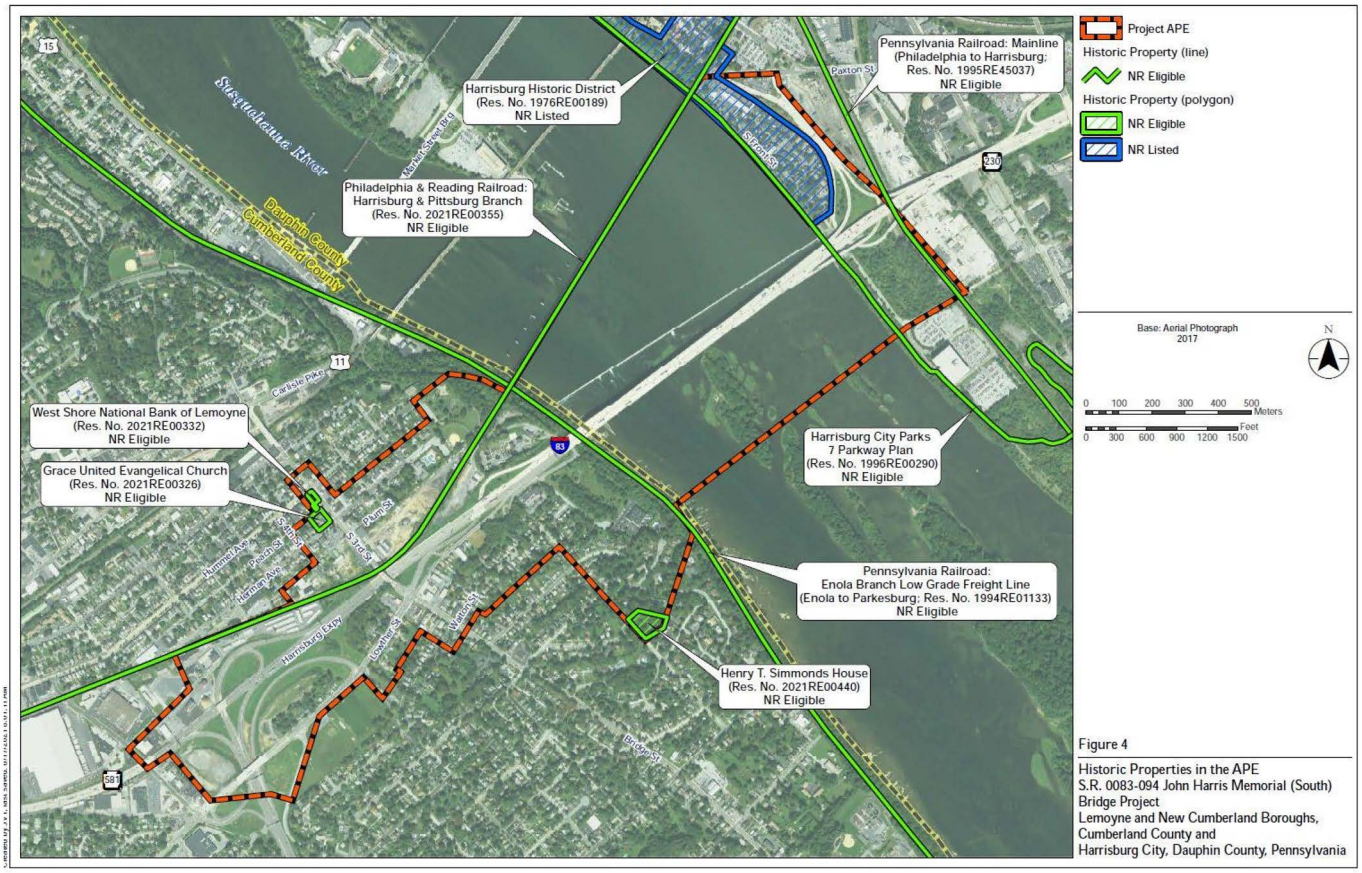


Historic resources within APE for the South Bridge Project.

## Dauphin 113754 SR 83-94 I-83 South Bridge Replacement Project

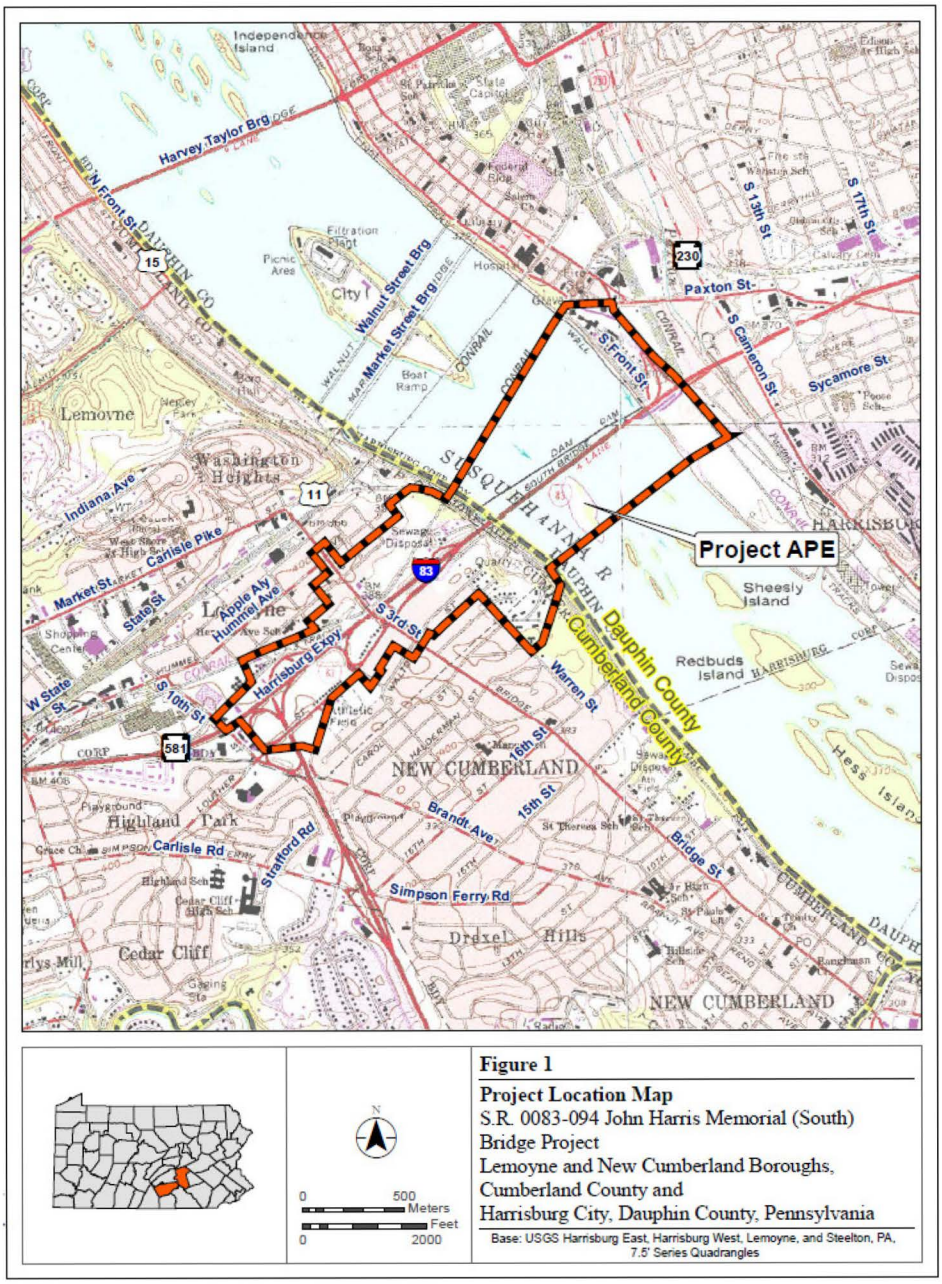


**Figure 1**
**Project Location Map**
S.R. 0083-094 John Harris Memorial (South) Bridge Project
Lemoyne and New Cumberland Boroughs, Cumberland County and
Harrisburg City, Dauphin County, Pennsylvania
Base: USGS Harrisburg East, Harrisburg West, Lemoyne, and Steelton, PA, 7.5' Series Quadrangles

APE map overlaid on USGS Topo map.

## Dauphin 113754 SR 83-94 I-83 South Bridge Replacement Project

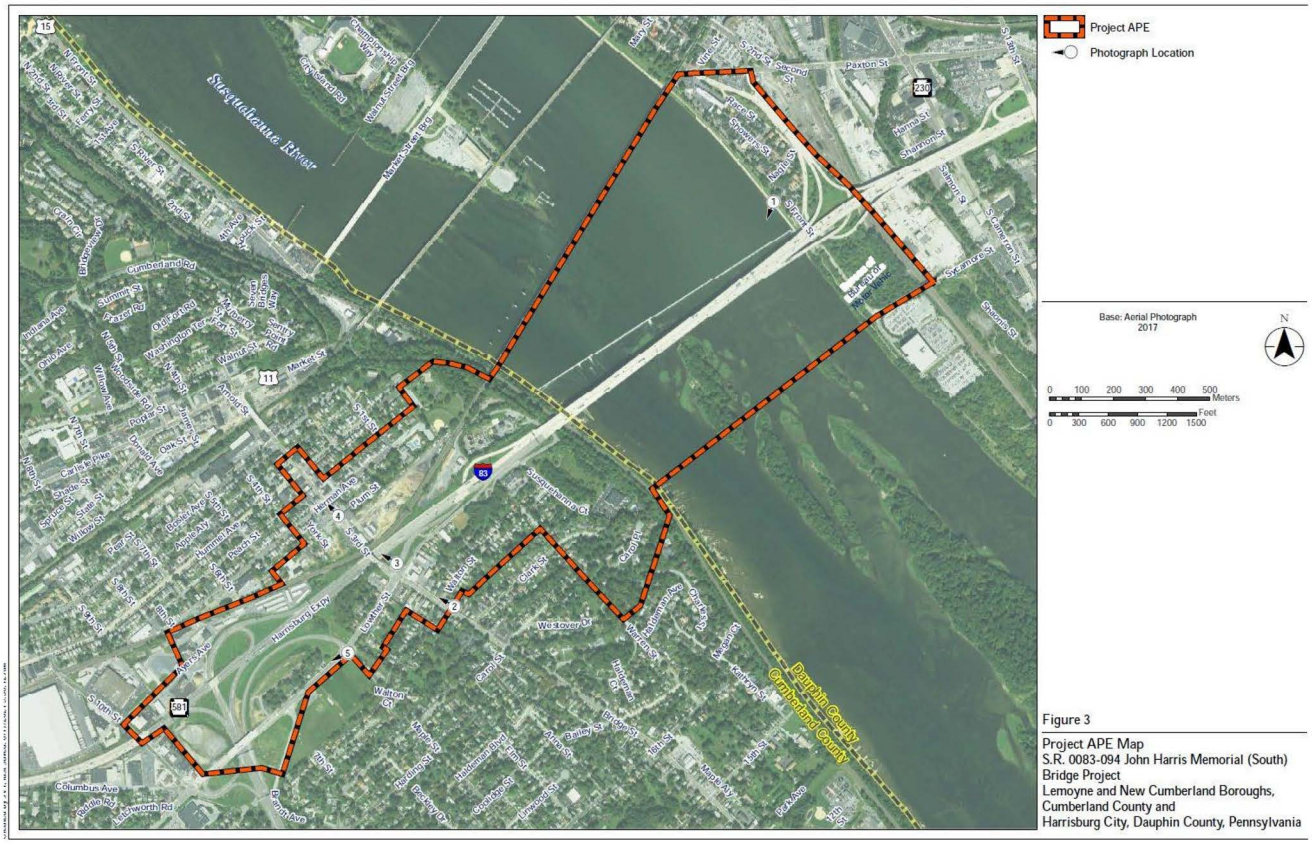


APE overlaid on aerial imagery.

## Dauphin 113754 SR 83-94 I-83 South Bridge Replacement Project

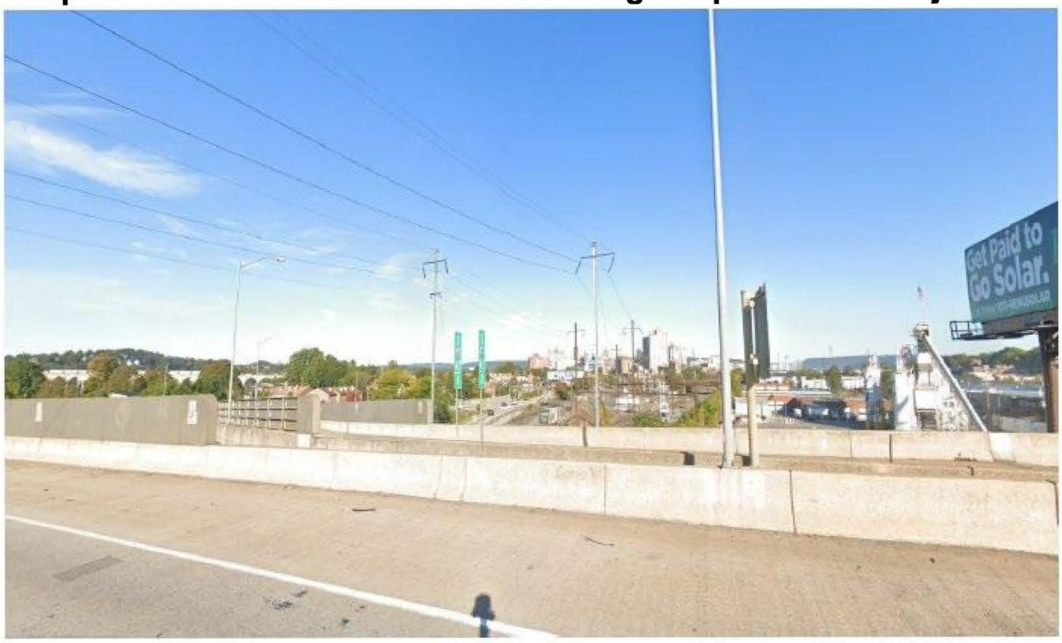


Photo 1– View looking north towards Harrisburg City.



Photo 2– View of South bridge from in front of Front Street Sewage Pumping Station at right of photo.

## Dauphin 113754 SR 83-94 I-83 South Bridge Replacement Project



Photo 3– View of Front street Sewage Pumping Station, Shipoke and the City of Harrisburg looking northeast from southern



Photo 4– Looking south toward Lemoyne Borough from southern shoulder.

## Dauphin 113754 SR 83-94 I-83 South Bridge Replacement Project



Photo 5– Taken from 3rd Street looking north toward South Bridge.



Photo 6– From 3rd Street looking north toward Lemoyne Borough.

## Dauphin 113754 SR 83-94 I-83 South Bridge Replacement Project




Photo 7- Intersection of Hummel Avenue and 3rd Street in Lemoyne looking south toward 3rd street Bridge.




Photo 8- Southern edge of APE looking northwest at SR 581 Loop ramp and Lemoyne Borough in background.

**Dauphin 113754 SR 83-94 I-83 South Bridge Replacement Project**

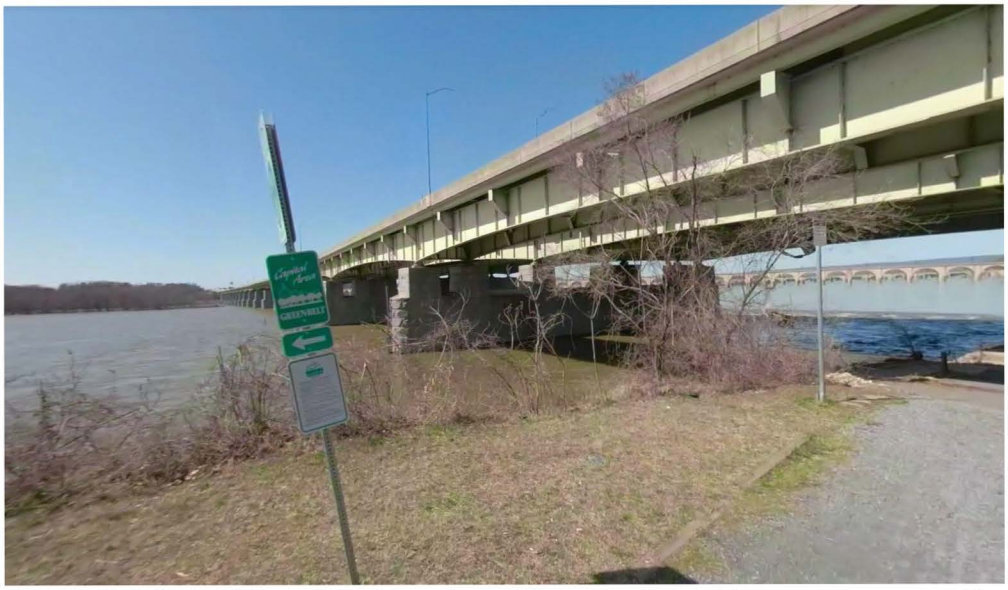

Photo 9- View of South Bridge from Greenbelt, looking west across Susquehanna River.

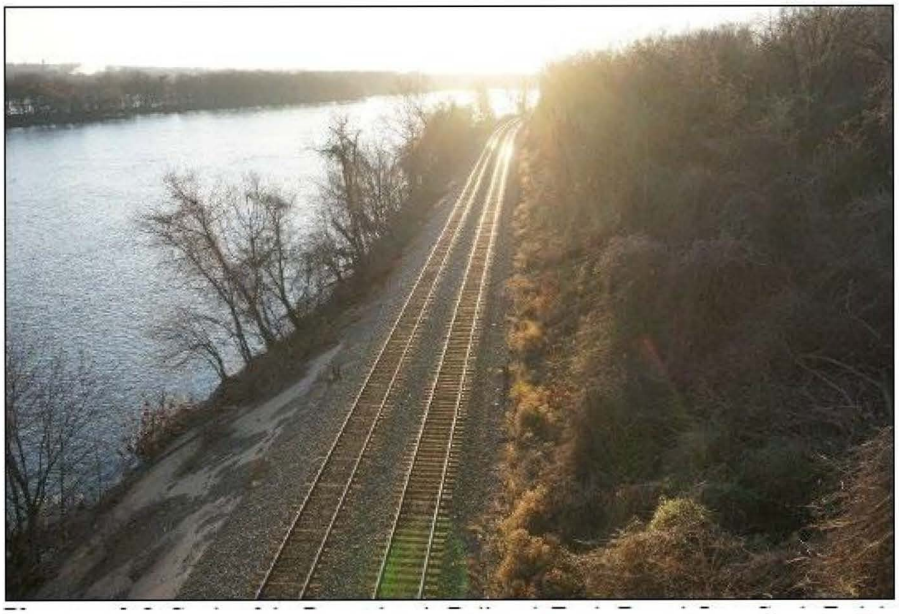

Photo 10- Pennsylvania Railroad: Enola Branch Low Grade Freight Line facing southeast.

**Dauphin 113754 SR 83-94 I-83 South Bridge Replacement Project**

Photo Log




Photo log overlaid on Google aerial imagery.

**Dauphin 113754 SR 83-94 I-83 South Bridge Replacement Project**




Replacement bridge design options.

## Dauphin 113754 SR 83-94 I-83 South Bridge Replacement Project

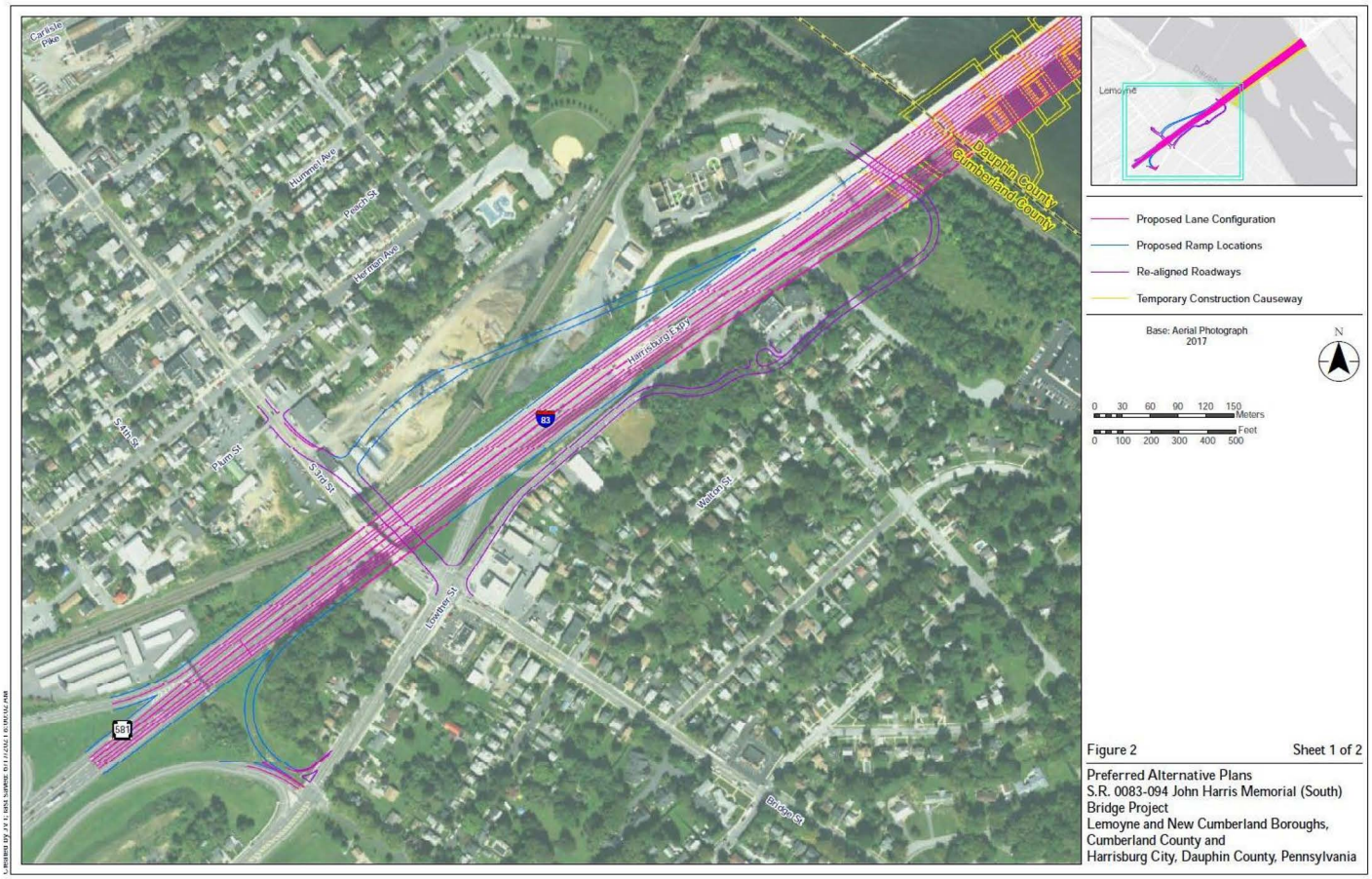


Plan sheet 1 overlaid on aerial imagery.

## Dauphin 113754 SR 83-94 I-83 South Bridge Replacement Project

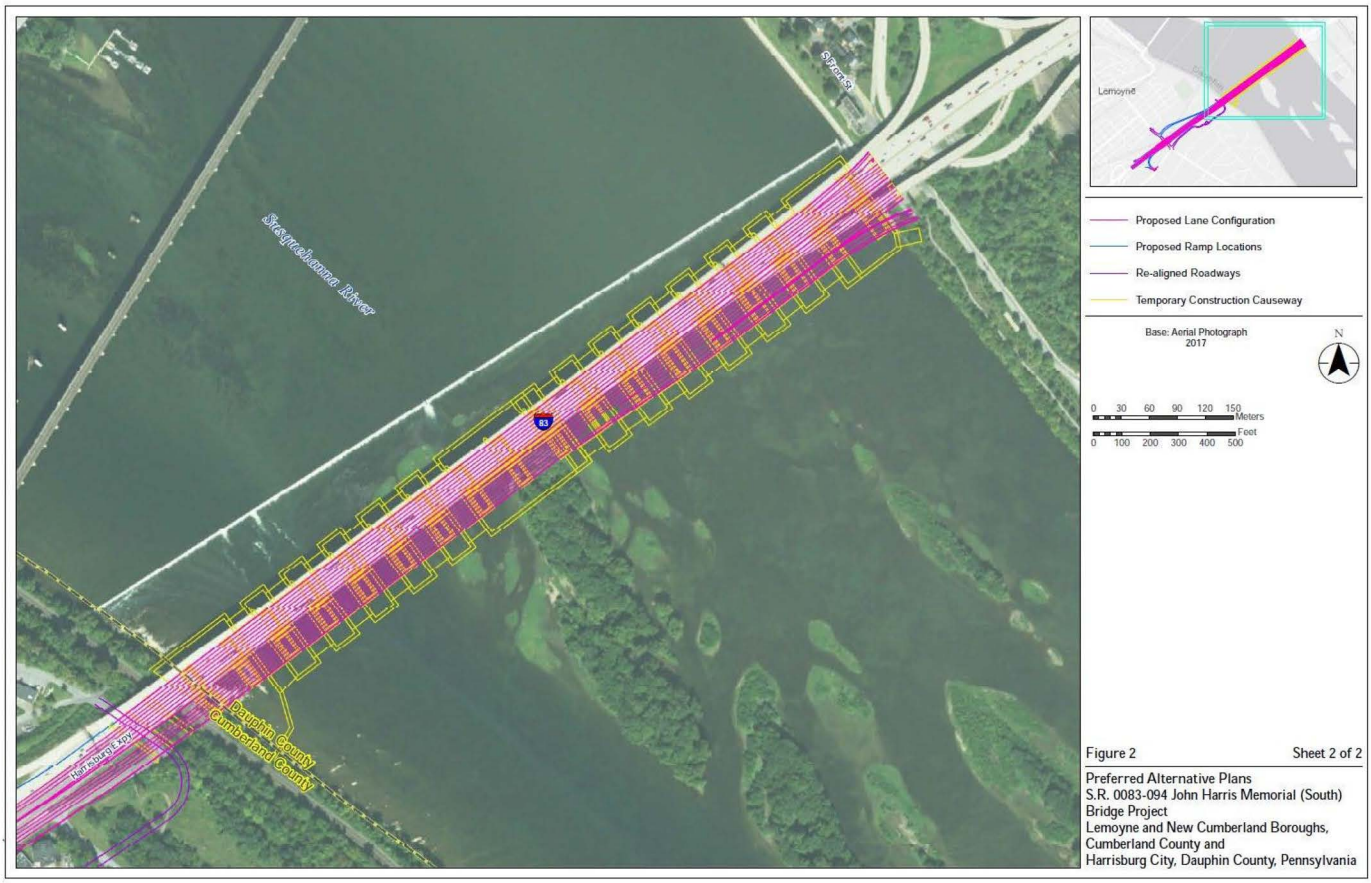


Plan sheet 2 overlaid on aerial imagery.

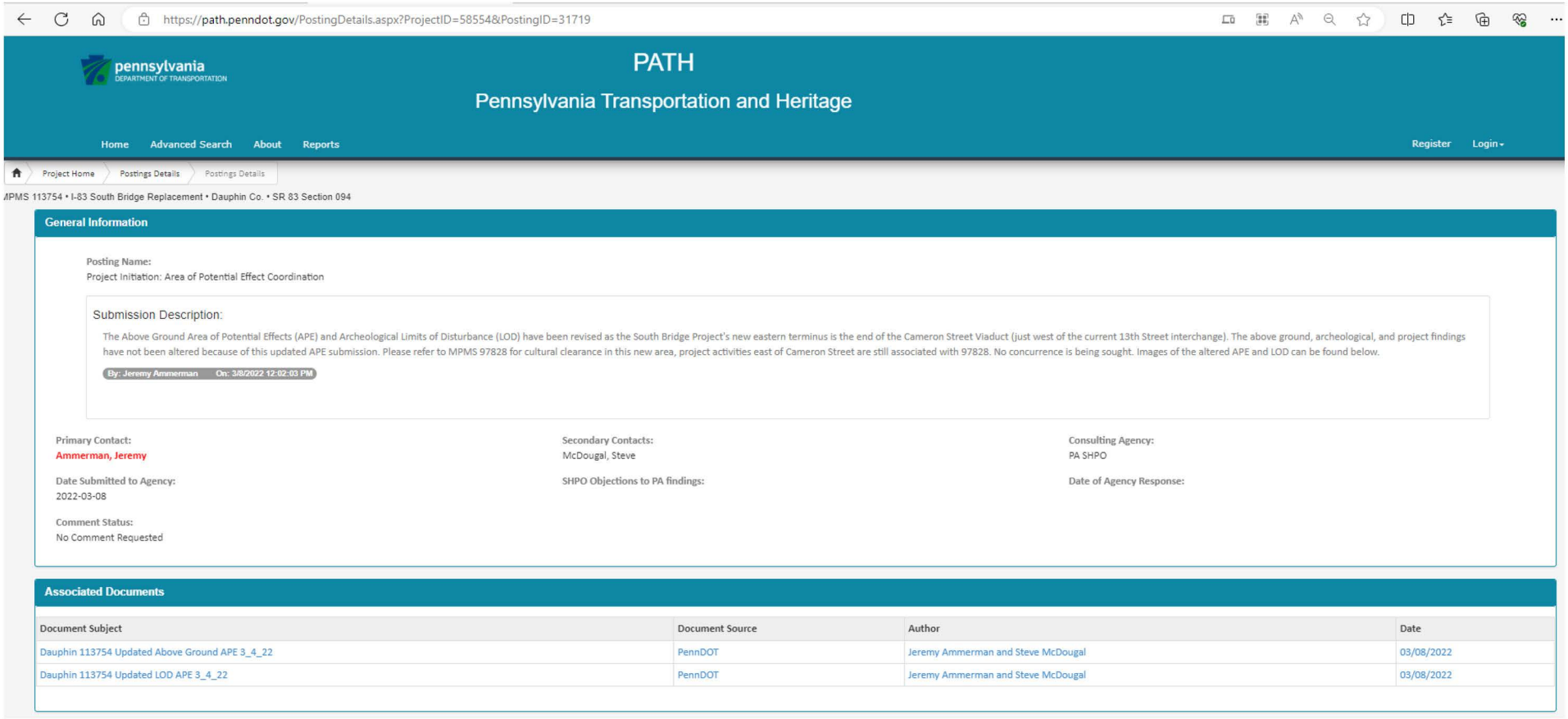
https://path.penndot.gov/PostingDetails.aspx?ProjectID=58554&PostingID=31719
pennsylvania
DEPARTMENT OF TRANSPORTATION
PATH
Pennsylvania Transportation and Heritage
Home
Advanced Search
About
Reports
Register
Login
Project Home
Postings Details
Postings Details
MPMS 113754 • I-83 South Bridge Replacement • Dauphin Co. • SR 83 Section 094
General Information
Posting Name:
Project Initiation: Area of Potential Effect Coordination
Submission Description:
The Above Ground Area of Potential Effects (APE) and Archeological Limits of Disturbance (LOD) have been revised as the South Bridge Project's new eastern terminus is the end of the Cameron Street Viaduct (just west of the current 13th Street interchange). The above ground, archeological, and project findings have not been altered because of this updated APE submission. Please refer to MPMS 97828 for cultural clearance in this new area, project activities east of Cameron Street are still associated with 97828. No concurrence is being sought. Images of the altered APE and LOD can be found below.
By: Jeremy Ammerman On: 3/8/2022 12:02:03 PM
Primary Contact:
Ammerman, Jeremy
Secondary Contacts:
McDougal, Steve
Consulting Agency:
PA SHPO
Date Submitted to Agency:
2022-03-08
SHPO Objections to PA findings:
Date of Agency Response:
Comment Status:
No Comment Requested
Associated Documents
Document Subject
Document Source
Author
Date
Dauphin 113754 Updated Above Ground APE 3_4_22
PennDOT
Jeremy Ammerman and Steve McDougal
03/08/2022
Dauphin 113754 Updated LOD APE 3_4_22
PennDOT
Jeremy Ammerman and Steve McDougal
03/08/2022

HARRISBURG
I-83 CAPITAL BELTWAY
SR 0083, SECTION 094
DAUPHIN COUNTY, PA

# Appendix D
## *DE MINIMIS* USE FORM

pennsylvania DEPARTMENT OF TRANSPORTATION

On Behalf of the Federal Highway Administration–Pennsylvania Division Office

# Determination of Section 4(f) *De Minimis* Use Section 2002 No Adverse Use Public Parks, Recreation Areas, Wildlife and/or Waterfowl Refuges, State Forest Land, and State Game Land

**May 2014 Version**

| | | | | | |
|---|---|---|---|---|---|
| **County:** | Dauphin | **State Route:** | 0083 | **Section:** | 079 |
| **Project Name:** | SR 0083, Section 079 Widening and Reconstruction | **FPN:** | TBD | **MPMS:** | 97828 |

**SELECT ONE:** ☐ **EIS** ☐ **EA** ☒ **CE** ☐ **EER** ☐ **ED**

**PROJECT DESCRIPTION:**
(Provide a concise but thorough description of the proposed action.)

The proposed State Road (SR) 0083, Section 079 project is located in Paxtang Borough, Swatara Township and the City of Harrisburg in Dauphin County, Pennsylvania. The project begins at the SR 3013 (29th Street) overpass and extends approximately two miles to the western project terminus at the northbound 2nd Street off-ramp of the SR 0083 bridge over the Susquehanna River (South Bridge) (Attachment 1). An alternatives analysis resulted in the identification of a recommended preferred alternative. The recommended preferred alternative consists of widening and full reconstruction to provide an Interstate facility that includes six mainline through lanes (three in each direction) and a two-lane collector-distributor (CD) road with ramp lanes providing access for local traffic at the interchanges. The CD road extends from the South Bridge to just east of the SR 3007 (19th Street) Interchange.

The proposed project will shift the mainline alignment south and hold the existing northern right-of-way line along the Norfolk Southern rail lines, and the existing 13th Street interchange will be relocated to SR 0230 (Cameron Street).

Access over and under SR 0083, Section 079 will remain as it is today with improvements made for bicycle and pedestrian traffic along with project lighting. The existing bridges over SR 0083 will be replaced at 13th Street, 19th Street, and 29th Street to accommodate mainline widening. Mainline bridges including the SR 0083 South Bridge viaduct, as well as the bridges over Paxton and 17th Streets will be widened and replaced. Roadway bridges over Norfolk Southern will be replaced and widened at 17th, 19th, and 29th Streets. SR 3010 (Paxton Street) will be realigned from the intersection at 13th Street to the intersection at 16th Street to improve the geometry of the bridge carrying SR 0083 over Paxton Street. The recommended preferred alternative was presented to the public in October 2018 and is available on the project website (http://www.i-83beltway.com).

**IDENTIFICATION OF SECTION 4(f)/SECTION 2002 PROPERTY:**
*(*List the property and provide a description of the property as per Chapter 6 of the *Section 4(f)/Section 2002 Handbook*. Attach a map, photo(s), etc. as appropriate.)

**The Harrisburg City Parks 7 Parkway Plan: Capital Area Greenbelt (Key No. 110669)** is both a Section 4(f) public park/recreation area and a Section 4(f) historic property. Known today as the Capital Area Greenbelt (Greenbelt), the Section 4(f) property consists of a series of connected parks and trails that circles the city of Harrisburg and extends into portions of Swatara and Susquehanna Townships. The park emerged from the City Beautiful movement as a response to Harrisburg's rapid

| | | | | | |
|---|---|---|---|---|---|
| **County:** | Dauphin | **State Route:** | 0083 | **Section:** | 079 |
| **Project Name:** | SR 0083, Section 079 Widening and Reconstruction | **FPN:** | TBD | **MPMS:** | 97828 |

growth and industrialization at the turn of the 20th century. The greenbelt concept was developed by professional planners and city boosters alongside a series of improvements meant to alleviate unsanitary and unpleasant urban conditions. Warren Manning, a Boston-based landscape architect, developed the plans for the parks. The 1901-1902 Manning plan called for linking new and existing parks and playgrounds with a green "parkway" that would surround the city with a continuous belt of greenspace. Land acquisition for the parks began in 1904 and continued until the 1920s, but difficulties in acquisition prevented the plan from reaching completion.

As a public park/recreational area, the Greenbelt is described as a 20-mile loop trail with on-road and dedicated paths for bikers, walkers, and non-motorized activities. It is operated by the non-profit Capital Area Greenbelt Association (CAGA) in coordination with the City of Harrisburg and Dauphin County Parks Department (DCPR).

As a historic property, the Greenbelt is considered to be a historic district, which was determined eligible for listing in the National Register of Historic Places (NRHP) under Criterion A for its association with events that have made a significant contribution to the broad patterns of history. The park system is associated with the City Beautiful movement, a national trend in city planning, architecture and landscape architecture that emerged at the turn of the 20th century.

**FOR PARKS, IDENTIFY KEY COMPONENTS OF ANY EXISTING MANAGEMENT PLAN (if it exists):**

No management plan was identified for the park system. However, the CAGA trail map identifies the area on the east side of the Susquehanna River underneath South Bridge as a parking area (see Attachment 2).

**OFFICIAL WITH JURISDICTION OVER SECTION 4(f)/SECTION 2002 PROPERTY:**

1. Identify agency with jurisdiction:
   Public Park: City of Harrisburg

   Historic Property: Pennsylvania State Historic Preservation Office (SHPO)

2. Name and title of contact person at agency:
   City of Harrisburg: Wayne Martin, City Engineer, Department of Engineering

   SHPO: Andrea Lowery, State Historic Preservation Officer

| | | | | | |
|---|---|---|---|---|---|
| **County:** | Dauphin | **State Route:** | 0083 | **Section:** | 079 |
| **Project Name:** | SR 0083, Section 079 Widening and Reconstruction | **FPN:** | TBD | **MPMS:** | 97828 |

**APPLICABILITY DETERMINATION:**

1. Provide the total acreage of the property: Acreage unknown. The Capital Area Greenbelt is a 20-mile linear resource of varying width.

   Describe the use of land from the property (identify amount of the property to be used, including temporary and permanent acquisition):

   The proposed project will result in minor alterations to the Greenbelt. The bridge carrying SR 0083 over the Greenbelt will be reconstructed and slightly widened. This will require the construction of larger piers within the resource boundary. The northbound 2nd Street off-ramp will be relocated to the south of its current alignment. New piers will be constructed to support the ramp and existing piers will be removed. A portion of the land under the SR 0083 bridges currently belongs to the City of Harrisburg; the other portion is privately owned. PennDOT currently holds an aerial easement over the resource. As part of the project, PennDOT will convert the aerial easement to fee simple right-of-way (ROW) and acquire additional ROW to accommodate the project footprint. PennDOT will develop an agreement for the City to operate and maintain the improved parking area under the bridge. SR 0083 will continue to cross over the Greenbelt and the use of the Section 4(f) property will not change.

   The existing Greenbelt trail between the South Bridge masonry pier and the Susquehanna River will remain unchanged. However, it will be temporarily detoured during construction to a path along Front Street. The gravel parking area currently located under SR 0083 will be paved and lighting will be provided. Pending coordination and a maintenance and operations agreement with the City and CAGA, a potential comfort station (restrooms and a drinking fountain) may be provided. After completion of the project, the access to the park will be restored to its current condition and the upper trail will be extended through the improved parking area. See Attachment 4.

2. The project **does not** adversely affect the activities, features, and attributes of the resource that qualify it for protection under Section 4(f) or Section 2002. **(If this statement cannot be verified as true, *de minimis*/no adverse use does not apply.)** ☒ YES

   Describe the effect to the qualities, activities, features, or attributes of the resource that qualify it for protection. Include a description of any mitigation included when making the determination regarding effects to the resource:

   Section 4(f) public park/recreational resource:
   The proposed project would not alter the qualities, activities, features, or attributes of the Greenbelt as a public park/recreational resource. Within the project limit, the users would be briefly stopped as necessary during construction. The resource would be restored to its current public use upon

| | | | | | |
|---|---|---|---|---|---|
| **County:** | Dauphin | **State Route:** | 0083 | **Section:** | 079 |
| **Project Name:** | SR 0083, Section 079 Widening and Reconstruction | **FPN:** | TBD | **MPMS:** | 97828 |

completion of the project. The gravel area under the SR 0083 bridge and ramps is currently used for parking. A formal parking lot with lighting is proposed for this area to improve public safety and access to the Greenbelt. The existing bridges, ramps, and support piers would be altered or removed, but they do not affect the use of the Greenbelt.

Section 4(f) historic property:
The NRHP-eligible Harrisburg City Parks 7 Parkway Plan / Capital Area Greenbelt, retains its integrity of location, design, material, feeling, and association. Changes have occurred over the years to affect its setting including increased urbanization and the construction of SR 0083 through the Greenbelt. The proposed project would impact a small portion of the Greenbelt along the riverfront, but it would not destroy or damage characteristics that make it eligible for listing in the NRHP. The relocation of bridge piers and improvements to the parking and trail will result in modest changes to the setting of a small portion of the historic resource. However, non-contributing bridges and piers and a gravel parking area already exist in the vicinity of the project, and the overall feeling and setting of the resource will not change. The design intent for this portion of the Greenbelt consisted of a riverfront promenade, and the project will not change the general design intent. The resource would still reflect significance as a City Beautiful park.

3. The public was afforded an opportunity to review and comment on the effects of the project on the protected activities, features, and attributes of the resource. ☒ YES

Identify the opportunity(ies) for public comment and describe the input received (provide attachments as appropriate to document the public involvement activity):

PennDOT has a website for the SR 0083 Beltway (http://www.i-83beltway.com), through which the public can receive information and provide comment. PennDOT hosted a public meeting on October 18, 2018 to provide a project update, share improvements under consideration, present the recommended preferred alternative, and gather public input.

PennDOT met twice with the City of Harrisburg, DCPR, and CAGA in order to discuss the project's effects on the Greenbelt. During the January 15, 2019 and February 19, 2019 stakeholder meetings, the group discussed impacts, the plans to improve the gravel parking area and trail under SR 0083, and public outreach efforts including sharing information on the CAGA website.

On March 27, 2019, DCPR posted the concept plans for the improved parking area and trail to their Facebook page and requested comments on the project be sent to PennDOT through the project website. CAGA shared the post on their Facebook page. DCPR also solicited feedback from their email subscribers, via an email blast on March 27, 2019. Two comments were received during the

| | | | | | |
|---|---|---|---|---|---|
| **County:** | Dauphin | **State Route:** | 0083 | **Section:** | 079 |
| **Project Name:** | SR 0083, Section 079 Widening and Reconstruction | **FPN:** | TBD | **MPMS:** | 97828 |

review period, both in favor of the proposed improvements to the parking area under the bridge at Front Street. The proposed plan is included in Attachment 5.

PennDOT solicited for Section 106 Consulting Parties through Project PATH on August 1, 2016 and by mailed letter in January 2018. Approximately 100 letters were sent to organizations and property owners in the project area. Including the Pennsylvania State Historic Preservation Office (SHPO), the project has 11 consulting parties, consisting of four organizations and seven property owners. Section 106 consulting parties were invited to attend the October 18, 2018 public meeting and consult with PennDOT and consultant teams on determinations of eligibility and anticipated impacts. Opportunities to sign up as a Section 106 consulting party were also available at the public meeting. All Section 106-related project information has been uploaded to ProjectPATH and shared electronically with consulting parties. Consulting parties were offered opportunities to comment on all submissions and no comments were received.

A summary of public involvement coordination is included in Attachment 6.

4. The official with jurisdiction over the property was informed of FHWA's and/or PennDOT's intent to make a *de minimis*/no adverse use finding. ☒ YES

Identify the method used to notify the official with jurisdiction, and attach appropriate correspondence.

City of Harrisburg: Stakeholder meeting on February 19, 2019.

SHPO: The SHPO was notified of the Section 106 Determination of Effect finding via ProjectPATH on February 22, 2019.

Correspondence documenting notification of the official with jurisdiction is included in the following Attachment: Attachment 5 – Correspondence with Officials with Jurisdiction

5. The official with jurisdiction over the property concurred in writing with FHWA's and/or PennDOT's determination that the project will not adversely affect the property. (NOTE: Public input must be received and considered prior to the official with jurisdiction making a final determination.) ☒ YES

Identify the official with jurisdiction and date of concurrence and attach written concurrence:

City of Harrisburg: The City of Harrisburg concurred with the Section 4(f) *De Minimis* Use on April 29, 2019.

| | | | | | |
|---|---|---|---|---|---|
| **County:** | Dauphin | **State Route:** | 0083 | **Section:** | 079 |
| **Project Name:** | SR 0083, Section 079 Widening and Reconstruction | **FPN:** | TBD | **MPMS:** | 97828 |

SHPO: The SHPO concurred with PennDOT's determination of No Adverse Effect in a letter dated March 21, 2019.

Written concurrence from the official with jurisdiction is included in the following Attachment: Attachment 5 – Correspondence with Officials with Jurisdiction

6. If the Section 4(f)/Section 2002 use involves State Game Land, verify that the use is considered *de minimis* in accordance with the *Cooperative Interagency Agreement for Interdepartmental Land Transfer of State Game Lands.* (Describe and obtain PA Game Commission concurrence signature below for use of a State Game Land Bank and/or Interdepartmental Land Transfer.) ☐ YES

☐ **State Game Land Bank**

Debiting Click here to enter text. (acres)

From Click here to enter text. SGL bank

PGC Signature: Date: Click here to enter a date.

☐ **Interdepartmental Land Transfer**
PGC Signature: Date: Click here to enter a date.

7. Have Federal or State funds [LWCF 6(f)/Project 70/Project 500/other recreation grants] been used in the acquisition of, or for any improvements to, the Section 4(f) property? ☐ YES ☒ NO

If Yes, the appropriate Federal agency has been coordinated with and is in agreement with the land conversion or transfer. ☐ YES

**Provide more information regarding the Section 6(f)/Project 70/Project 500/other recreation grants coordination:**

8. The project does not involve any uses that would require an individual Section 4(f) evaluation. (It is acceptable if there are other Section 4(f) uses that are covered by one of the nationwide programmatic Section 4(f) evaluations or meet temporary occupancy criteria.) ☒ YES

| | | | | | |
|---|---|---|---|---|---|
| **County:** | Dauphin | **State Route:** | 0083 | **Section:** | 079 |
| **Project Name:** | SR 0083, Section 079 Widening and Reconstruction | **FPN:** | TBD | **MPMS:** | 97828 |

If there are other Section 4(f) properties used, list them here, briefly describe the use, and identify which form(s) will be completed to address the use:

East Shore Diner – relocate historic diner and acquire land for permanent transportation use – *De Minimis* Use Form

Pennsylvania Railroad: Main Line (Philadelphia to Harrisburg) – replace non-contributing bridges spanning the railroad (AMTRAK), no ROW acquisition – Non-Applicability/No Use Form

Philadelphia & Reading Railroad (Philadelphia to Harrisburg)– replace non-contributing bridges spanning the railroad (Norfolk Southern), acquire ROW from non-contributing land – Non-Applicability/No Use Form

Susquehanna River Water Trail – temporary causeway for ramp construction in a no-portage zone – Non-Applicability/No Use Form

| | | | | | |
|---|---|---|---|---|---|
| **County:** | Dauphin | **State Route:** | 0083 | **Section:** | 079 |
| **Project Name:** | SR 0083, Section 079 Widening and Reconstruction | **FPN:** | TBD | **MPMS:** | 97828 |

In accordance with PA Act 120 Section 2002 requirements, briefly summarize the impacts to other Section 2002 areas of concern that would occur if the use of the public park, recreation area, or wildlife or waterfowl refuge was avoided. Other Section 2002 areas of concern to be discussed could include the following:

(1) residential and neighborhood character and location, (2) conservation including air, erosion, sedimentation, wildlife and general ecology of area, (3) noise, and air and water pollution, (4) multiple use of space, (5) replacement housing, (6) displacement of families and business, (7) aesthetics, (8) public health and safety, (9) fast, safe and efficient transportation, (10) civil defenses, (11) economic activity, (12) employment, (13) fire protection, (14) public utilities, (15) religious institutions, (16) conduct and financing of government including the effect on the local tax base and social service costs, (17) property values, (18) education, including the disruption of school district operations, (19) engineering, right-of-way and construction costs of the project and related facilities, (20) maintenance and operating costs of the project and related facilities, and (21) operation and use of existing transportation routes and programs during construction and after completion.

Due to the presence of the Section 4(f)/Section 2002 property on both sides of and beneath the SR 0083 corridor, the only way to avoid impacting the Section 4(f)/Section 2002 property would be to rehabilitate the existing SR 0083 structures or replace them in-kind, without acquiring the ROW. However, converting the existing aerial easement to fee-simple ROW will give PennDOT control over activities under the SR 0083 bridges and protect the Interstate transportation facility.

Rehabilitating or replacing the structures in-kind may avoid impacting the Section 4(f)/Section 2002 property, but doing so would not address the needs of the project. Keeping the existing configuration would not accommodate existing and future traffic volumes and would not address the operational safety concerns at the 2nd Street interchange.

This avoidance alternative would concern (8) public health and safety, (9) fast, safe and efficient transportation, and (10) civil defenses.

pennsylvania
DEPARTMENT OF TRANSPORTATION

On Behalf of the Federal Highway Administration–Pennsylvania Division Office

# Determination of Section 4(f) *De Minimis* Use Section 2002 No Adverse Use Public Parks, Recreation Areas, Wildlife and/or Waterfowl Refuges, State Forest Land, and State Game Land

**May 2014 Version**

| | | | | | |
|---|---|---|---|---|---|
| **County:** | Dauphin | **State Route:** | 0083 | **Section:** | 079 |
| **Project Name:** | SR 0083, Section 079 Widening and Reconstruction | **FPN:** | TBD | **MPMS:** | 97828 |

**Include any additional information related to the park impact that is relevant to the determination of *de minimis*/no adverse use:**

The Section 4(f) property is both a park and a historic resource and is only documented once, in this Determination of Section 4(f) *De Minimis* Use form.

## SUMMARY AND DETERMINATION:

The project involves a *de minimis*/no adverse use on the Section 4(f)/Section 2002 property as evidenced through the minimization of harm to a public park, recreation land, or wildlife and waterfowl refuge as a result of mitigation to or avoidance of impacts to the qualifying characteristics and/or the functions of the resource. Based on the scope of the undertaking; the fact that the undertaking does not adversely affect the function/qualities of the Section 4(f)/Section 2002 property on a permanent or temporary basis; and with agreement from the official with jurisdiction, the proposed action constitutes a *de minimis*/no adverse use; and therefore, no analysis of avoidance alternatives is required.

Name and Organization of Preparer: Lindsey Allen, JMT
Robert Bolich, HNTB Corp. Date: 5/2/2019

Project Manager: John M Bachman Date: 5/2/19

Environmental Manager: Diana E. Oh Date: 5/2/19

PennDOT, BOPD: Date: 5/2/19

FHWA: Date: 05·02·2019

| | | | | | |
|---|---|---|---|---|---|
| **County:** | Dauphin | **State Route:** | 0083 | **Section:** | 079 |
| **Project Name:** | SR 0083, Section 079 Widening and Reconstruction | **FPN:** | TBD | **MPMS:** | 97828 |

**List Section 4(f) mitigation measures associated with this use that are part of this project:**

The ROW acquisition required in order to give PennDOT control of the activities under the SR 0083 bridges and to protect the Interstate transportation facility constitutes the Section 4(f) use of the Greenbelt. The Officials with Jurisdiction agree that the impacts are not adverse, as such the Section 4(f) use is *de minimis.*

Mitigation measures associated with this use are as follows:
--The Greenbelt trail between the South Bridge masonry pier and the Susquehanna River will remain unchanged, though temporarily detoured during construction to a path along Front Street. This will allow for use of the park during construction.
--The gravel parking area currently located under SR 0083 will be paved and lighting will be provided. Pending coordination and a maintenance and operations agreement with the City and CAGA, a potential comfort station may be provided.
--After completion of the project, the park will be restored to its current condition and the upper trail will be extended through the improved parking area.

**Typical attachments for this form include, but are not limited to:**

- Project location map
- Map of affected Section 4(f) property and other Section 4(f) property(ies) in the project vicinity
- Photographs of the Section 4(f) property
- Project plan sheet to show impacts
- Correspondence with the official with jurisdiction
- Public involvement information

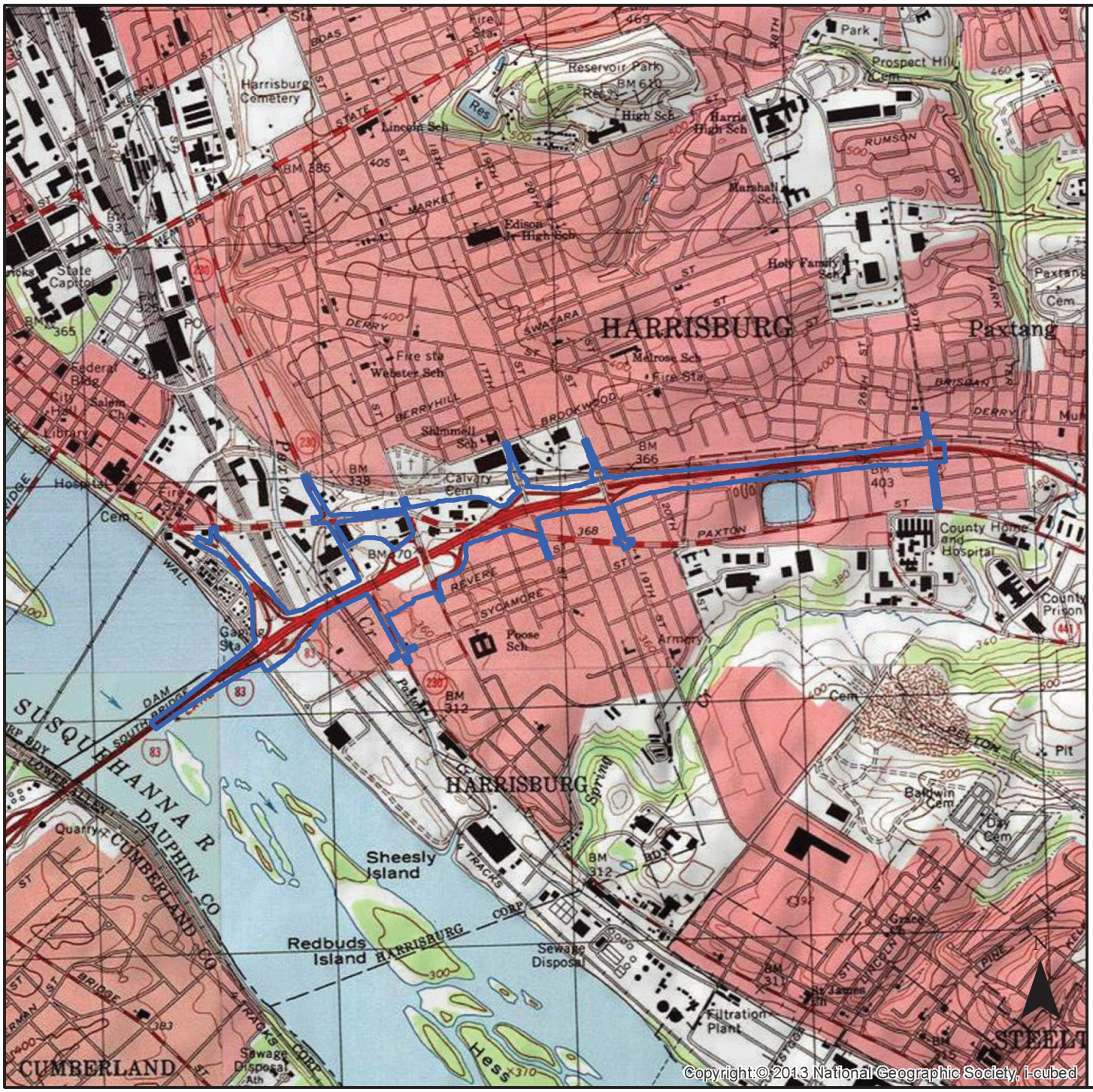


# Attachment 1
# Project Location Map

## SR 0083
## Section 079
## Widening and Reconstruction Project

**Source:**
USGS 24k Topo Maps: Harrisburg East, Harrisburg West, Lemoyne, Steelton.

**Scale:**

0 750 1,500 3,000 Feet

**Key**

Limit of Impacts

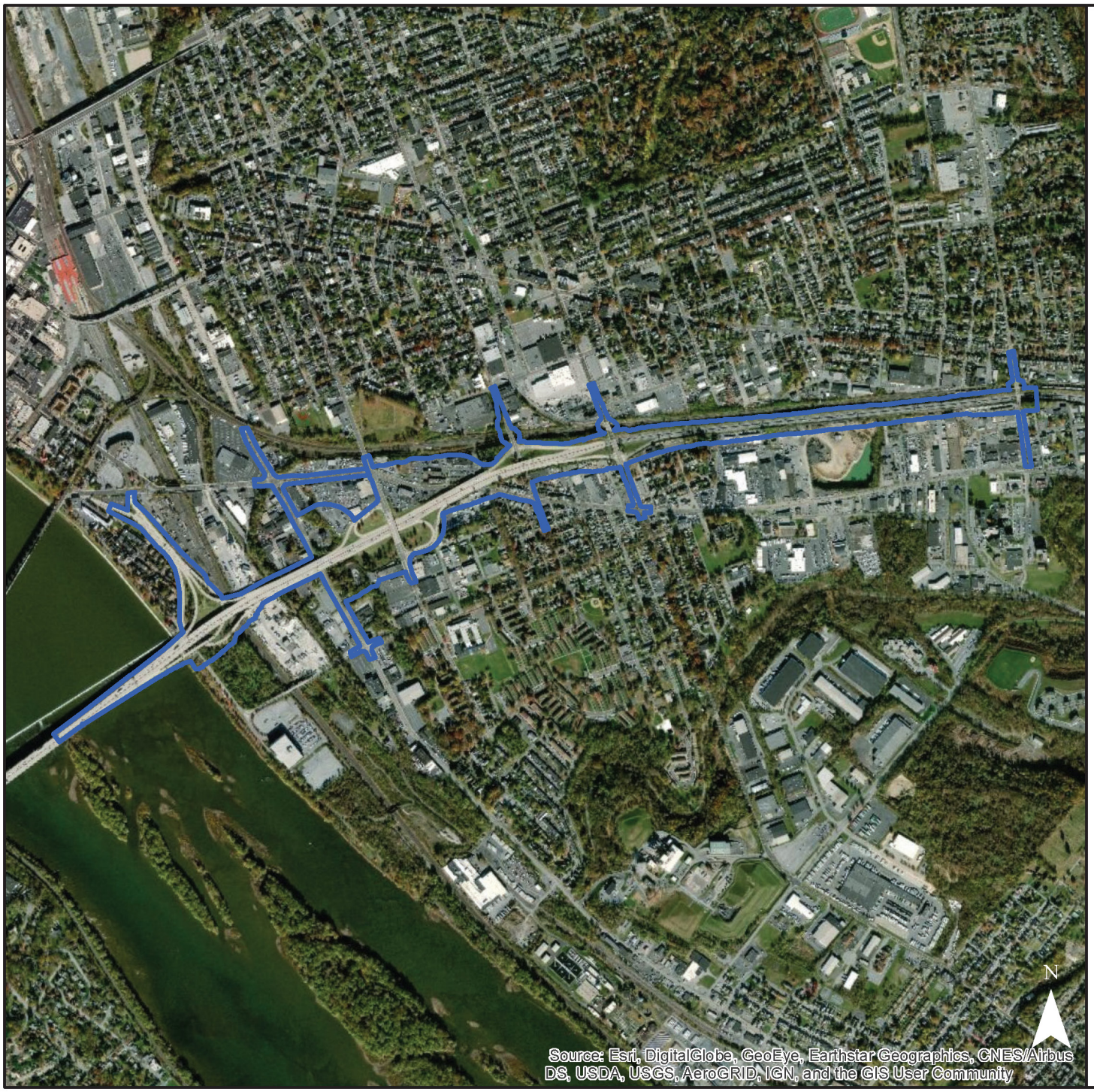


# Attachment 1
# Project Location Map

## SR 0083
## Section 079
## Widening and Reconstruction Project

**Scale:**

0 625 1,250 2,500 Feet

**Source:**

ESRI 2019.

**Key**

Limit of Impacts

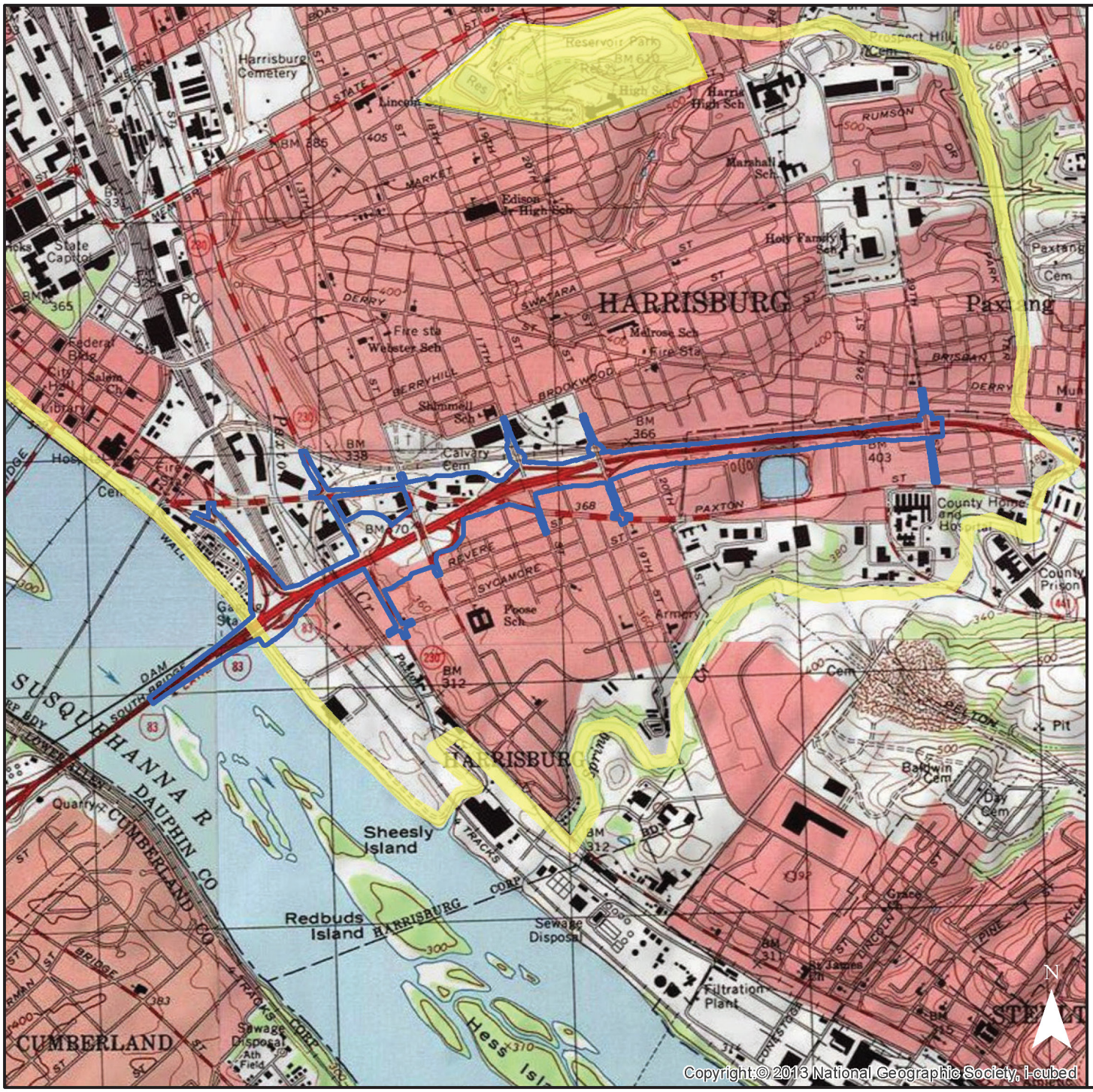


# Attachment 2
# Affected Section 4(f) Properties

## Capital Area Greenbelt

## Section 4(f) De Minimis Use

**Scale:**

0 750 1,500 3,000 Feet

**Source:**

USGS 24k Topo Maps:
Harrisburg East, Harrisburg West, Lemoyne, Steelton.

**Key**

- Limit of Impacts
- Section 4(f) Properties

# Attachment 2 Affected Section 4(f) Properties
# Capital Area Greenbelt
# Section 4(f) De Minimis Use



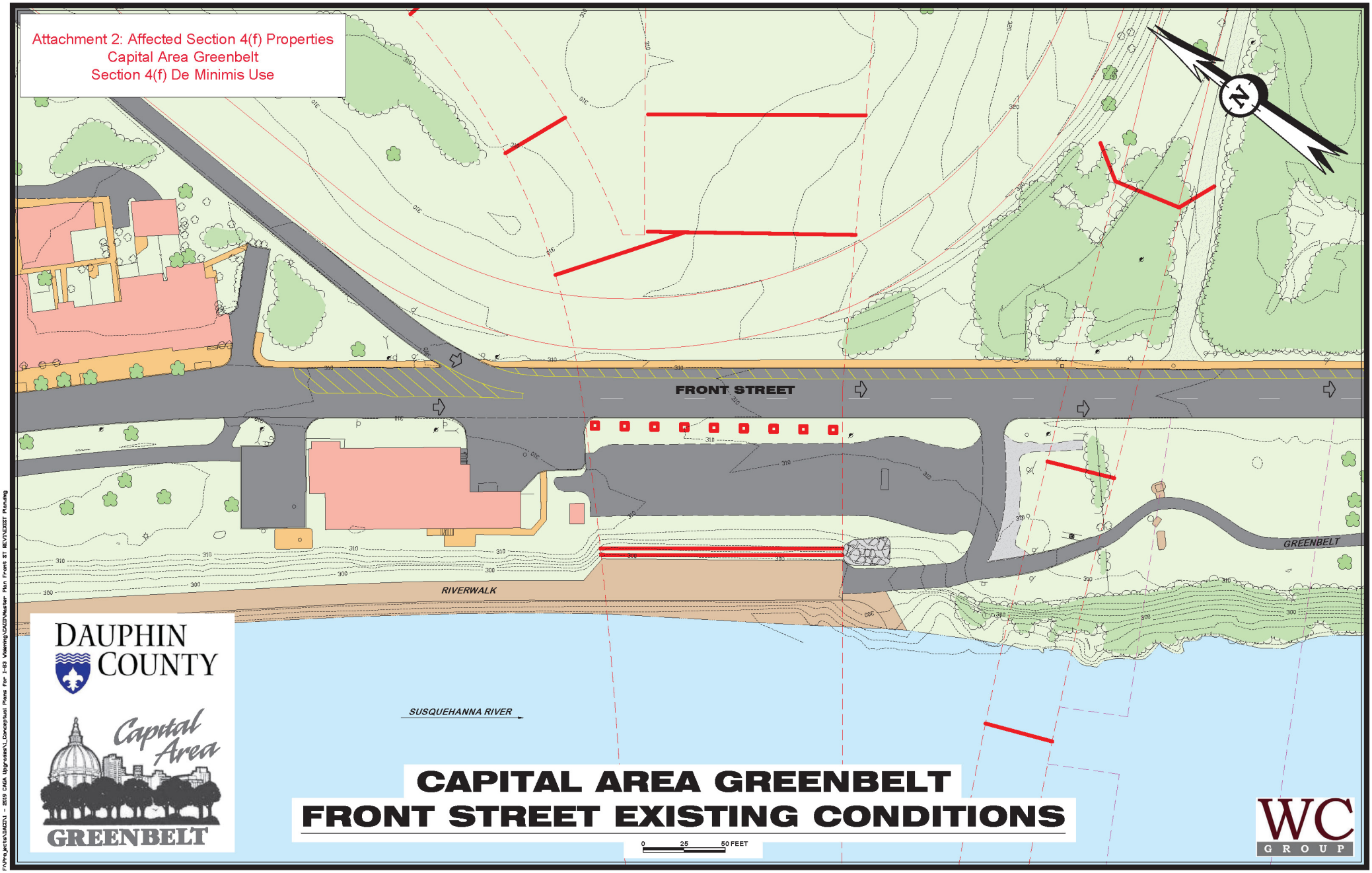
Attachment 2: Affected Section 4(f) Properties
Capital Area Greenbelt
Section 4(f) De Minimis Use
FRONT STREET
GREENBELT
RIVERWALK
SUSQUEHANNA RIVER
DAUPHIN COUNTY
Capital Area
GREENBELT
CAPITAL AREA GREENBELT
FRONT STREET EXISTING CONDITIONS
0 25 50 FEET
WC GROUP

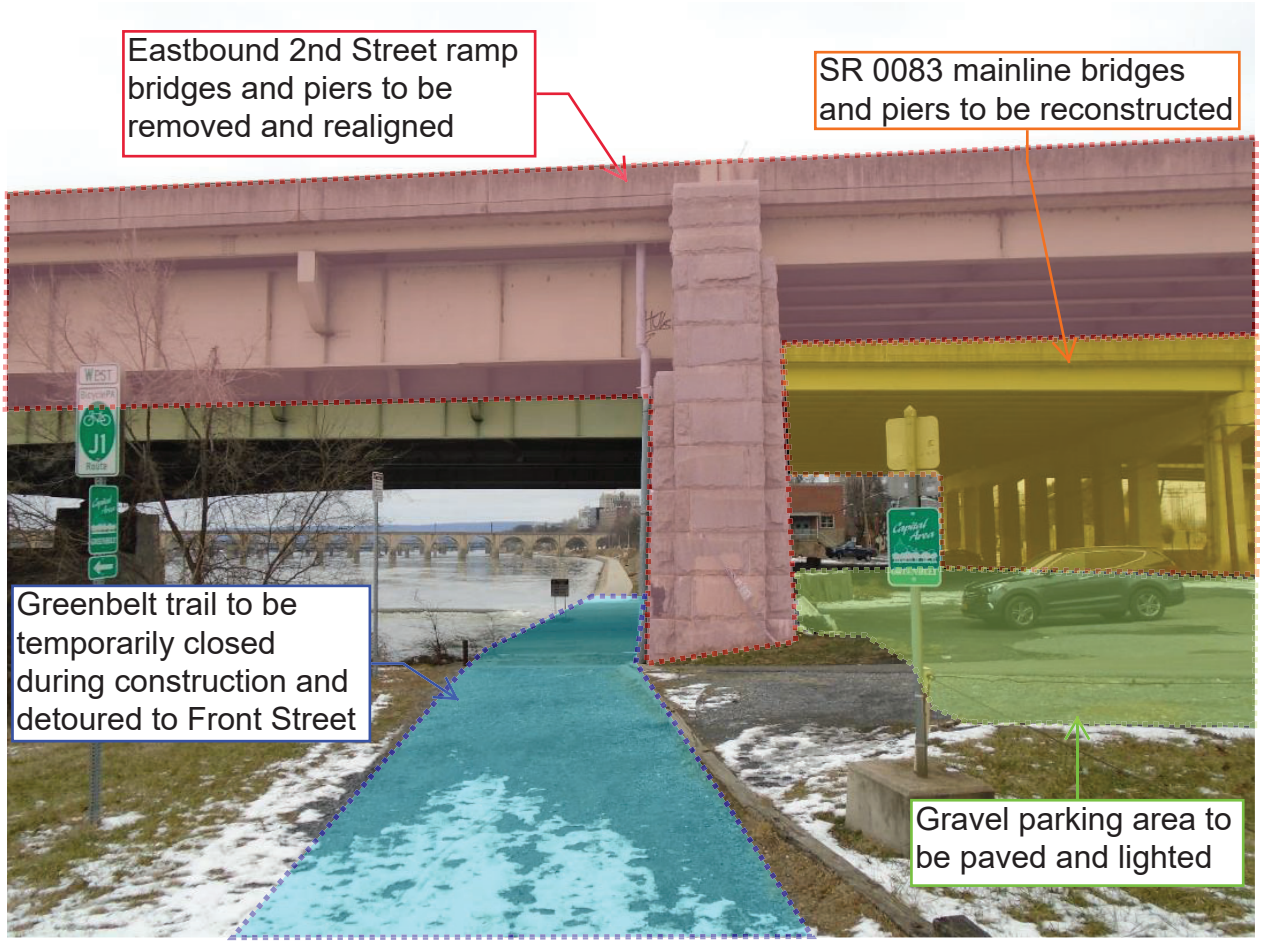


View of the bridges carrying SR 0083 and the 2nd Street ramp over the Capital Area Greenbelt, view looking north.




View of the bridges carrying SR 0083 and the 2nd Street ramp over the Capital Area Greenbelt, looking northwest.

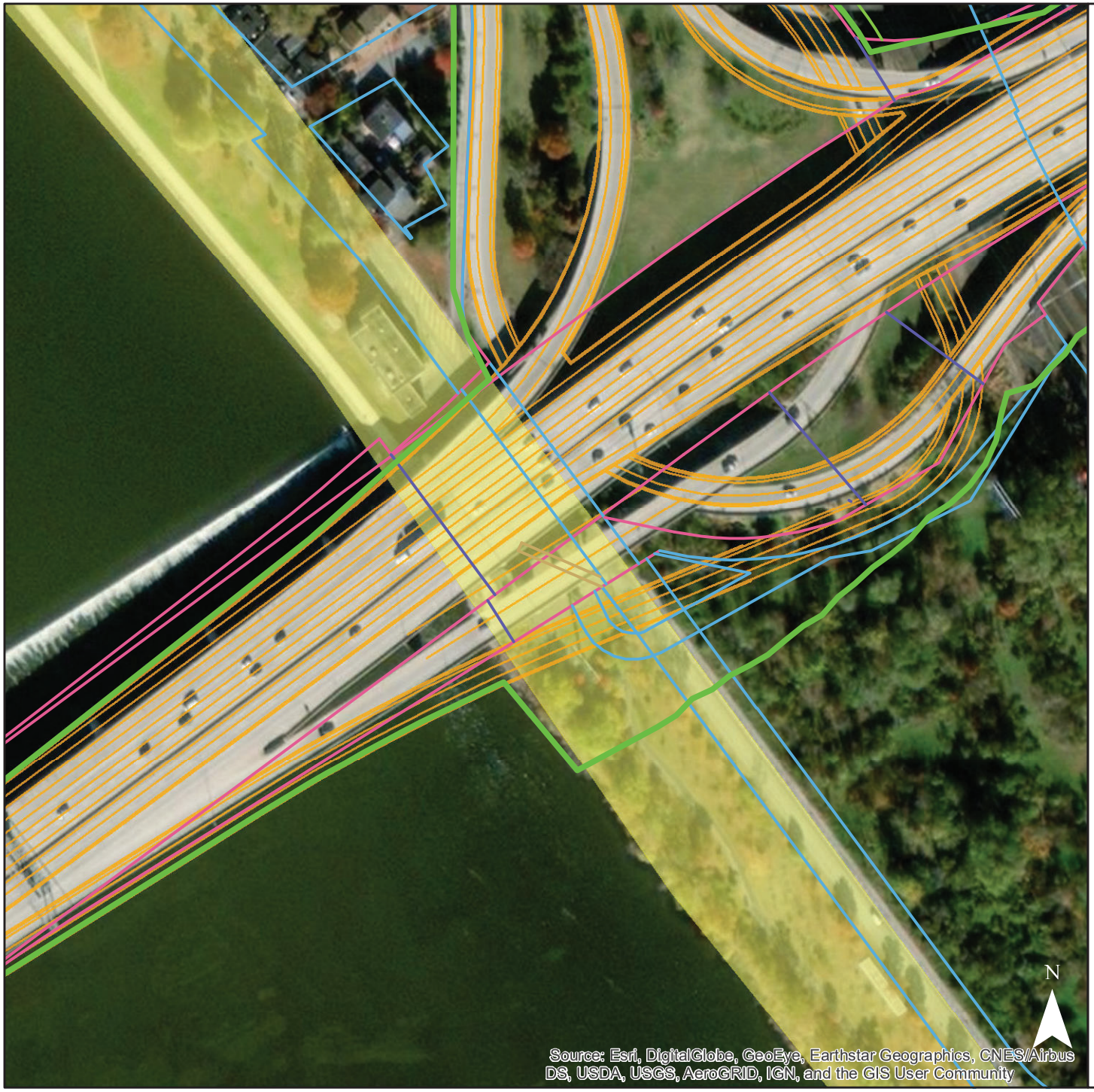


# Attachment 4
# Project Plan Sheet

## Section 4(f)
## De Minimis Use

## Capital Area Greenbelt

**Scale:**

0 65 130 260 Feet

**Source:**

ESRI 2019.

**Key**

- Section 4(f) Property Boundary
- Limit of Impacts
- Proposed Pavement Marking
- ROW-Legal Right of Way Line
- ROW-Legal Limited Access Line
- ROW-Legal Limit of Slope Line
- ROW-Legal Aerial Easement
- ROW-Legal Drainage Easement

Pennsylvania State Historic Preservation Office
PENNSYLVANIA HISTORICAL AND MUSEUM COMMISSION

March 21, 2019

Brian Thompson, Director
Bureau of Project Delivery
Attn: Jeremy Ammerman, District 8-0
PA Department of Transportation
P.O. Box 2966
Harrisburg, PA 17105

RE: ER 2016-8479-043-U: I-83, Section 0709 (MPMS 97828); I-83 from the Susquehanna River to SR 3013 (29th Street); Harrisburg and Swatara Township, Dauphin County; Determination of Effects: Above Ground Resources

Dear Mr. Thompson,

Thank you for submitting information concerning the above referenced project. The Pennsylvania State Historic Preservation Office (PA SHPO) reviews projects in accordance with state and federal laws. Section 106 of the National Historic Preservation Act of 1966, and the implementing regulations (36 CFR Part 800) of the Advisory Council on Historic Preservation, is the primary federal legislation. The Environmental Rights amendment, Article 1, Section 27 of the Pennsylvania Constitution and the Pennsylvania History Code, 37 Pa. Cons. Stat. Section 500 et seq. (1988) is the primary state legislation. These laws include consideration of the project's potential effects on both historic and archaeological resources.

**Above Ground Resources**
Based on the information received and available within our files, we concur with the findings of the agency that the proposed project will result in an overall finding of **No Adverse Effect** to historic properties. Specifically, we concur that the proposed project will have No Effect on the following properties: Calvary Presbyterian Church (Key No.121109); Capital Roller Rink (Key No.208562); Harrisburg Historic District (Key No.000508); Kohl Brothers Artesian Well Drillers (Key No.208566); Mount Pleasant Historic District (Key No. 064470); Paxton Fire Station (Key No. 102204). We concur that the proposed project will have No Adverse Effect on the following properties: East Shore Diner (Key No. 143137), Pennsylvania Railroad: Main Line (Key No.105675); Philadelphia & Reading Railroad (Key No.112375), and the Harrisburg City Parks 7 Parkway Plan; Capital Area Greenway (Key No. 110669). With regards to the East Shore Diner (Key No. 143137), this No Adverse Effect finding is based upon the proposed plan to relocate the diner to a new location to continue its function as a diner. Please notify our office of the selected relocation once determined. If project plans should change to the degree that the diner cannot be successfully relocated to remain open for business, please notify our office to reopen consultation.

If you need further information concerning this review, please contact Emma Diehl at emdiehl@pa.gov or (717) 787-9121.

Sincerely,

Douglas C. McLearen, Chief
Division of Environmental Review

Attachment 5 - Correspondence with Official With Jurisdiction

OS-600C (11-15)

pennsylvania
DEPARTMENT OF TRANSPORTATION

April 29, 2019

Mr. Wayne Martin
City Engineer
City of Harrisburg
123 Walnut St #212,
Harrisburg, PA 17101

RE: SR 0083, Section 0079
Request for Concurrence on *De Minimis* Impact to the Capital Area Greenbelt

Dear Mr. Martin:

This letter is regarding the proposed impacts to the Capital Area Greenbelt (Greenbelt) park property located along the Susquehanna River in the City of Harrisburg, Dauphin County, as a result of the State Route (SR) 0083, Section 079 widening and reconstruction project. The Greenbelt is a public recreational resource that is afforded protection under the Section 4(f) of the U.S. Department of Transportation Act of 1966. As such a protected resource, a concurrence review with the Official with Jurisdiction is required for the completion of the Section 4(f) *De Minimis* Use Section/2002 No Adverse Use Checklist due to the use of Greenbelt property for the proposed project. Figure 1 provides an overview of the Greenbelt existing conditions at Front Street.

As discussed at the January 15, 2019 and February 19, 2019 Greenbelt coordination meetings, this project will result in minor alterations to the Greenbelt. The bridge carrying SR 0083 over the Greenbelt will be reconstructed and slightly widened. This will require the construction of piers within the resource boundary. The northbound 2nd Street off-ramp will be relocated to the south of its current alignment. New piers will be constructed to support the ramp and existing piers will be removed. A portion of the land under the SR 0083 bridges currently belongs to the City of Harrisburg; the other portion is privately owned. PennDOT currently holds an aerial easement over the resource. As part of the project, PennDOT will convert the aerial easement to fee simple right-of-way (ROW) and acquire additional ROW to accommodate the project footprint. PennDOT will develop an agreement for the City to operate and maintain the improved parking area under the bridge. SR 0083 will continue to cross over the Greenbelt and the use of the Section 4(f) property will not change.

The existing Greenbelt trail between the South Bridge masonry pier and the Susquehanna River will remain unchanged. However, it will be temporarily detoured during construction to a path along Front Street. The gravel parking area currently located under SR 0083 will be paved and lighting will be provided. Pending coordination and a maintenance and operations agreement between PennDOT, the City of Harrisburg and Capital Area Greenbelt Association, a potential comfort station (restrooms and a drinking fountain) may be provided. After completion of the project, the access to the park will be restored to its current condition and the upper trail will be extended through the improved parking area. Figure 2 provides an overview of the proposed draft improvements.

The overall project was presented to the public at an open house meeting on October 19, 2018. Additionally, the information in Figures 1 and 2 was shared with the public by the Dauphin County Department of Parks and Recreation and the Greenbelt to solicit comments on the proposed Section 4(f) use of the existing Greenbelt and the proposed Greenbelt improvements. During the 12-day public review period, two comments were received. The comments were both favorable and are provided in the table below for your reference.

| First Name | Last Name | Date | Comment |
|---|---|---|---|
| Eric | Baker | 3/30/2019 | I like the idea of the proposed comfort station and paved parking under the bridge at Front St. as well as the dedicated trail behind the pumping station. I also like the improvements (particularly the elimination of the hairpin turn on the trail) at Rutherford House. Please pave all portions of the Greenbelt through that segment. |
| Pat | Reddy | 3/28/2019 | The proposed improvements to the Capital Area Greenbelt look very good. Thanks for making our rides safer and more enjoyable. |

A review of the project impacts and proposed construction show that the impacts to the Greenbelt will be minimal and will not alter or affect the use of the park. Based on this assessment, we intend to make a determination that the impact to the park property would be *de minimis*. As previously mentioned, to complete the Section 4(f) *De Minimis* Use Section/2002 No Adverse Use Checklist, your written concurrence that this project will not adversely affect the activities, features, and attributes of the park property is necessary. To acknowledge that you have been notified of the intent to apply the Section 4(f) *de minimis* finding and your agreement that the park will not be adversely affected, please sign below and return the signed copy to John Bachman at the address below. Your prompt response is appreciated.

If you have any questions, please call me at 717.783.4519.

Sincerely,

John M Bachman

John Bachman
Sr. Project Manager

As the official with jurisdiction over Capital Area Greenbelt, I hereby concur with the recommendation of the project proponents that the use and impacts associated with this project along with the identified avoidance, minimization, and mitigation measures, will not adversely affect the activities, features, and attributes that qualify the property for protection under section 4(f).

Wayne Martin, City Engineer
City of Harrisburg

4/29/19
Date

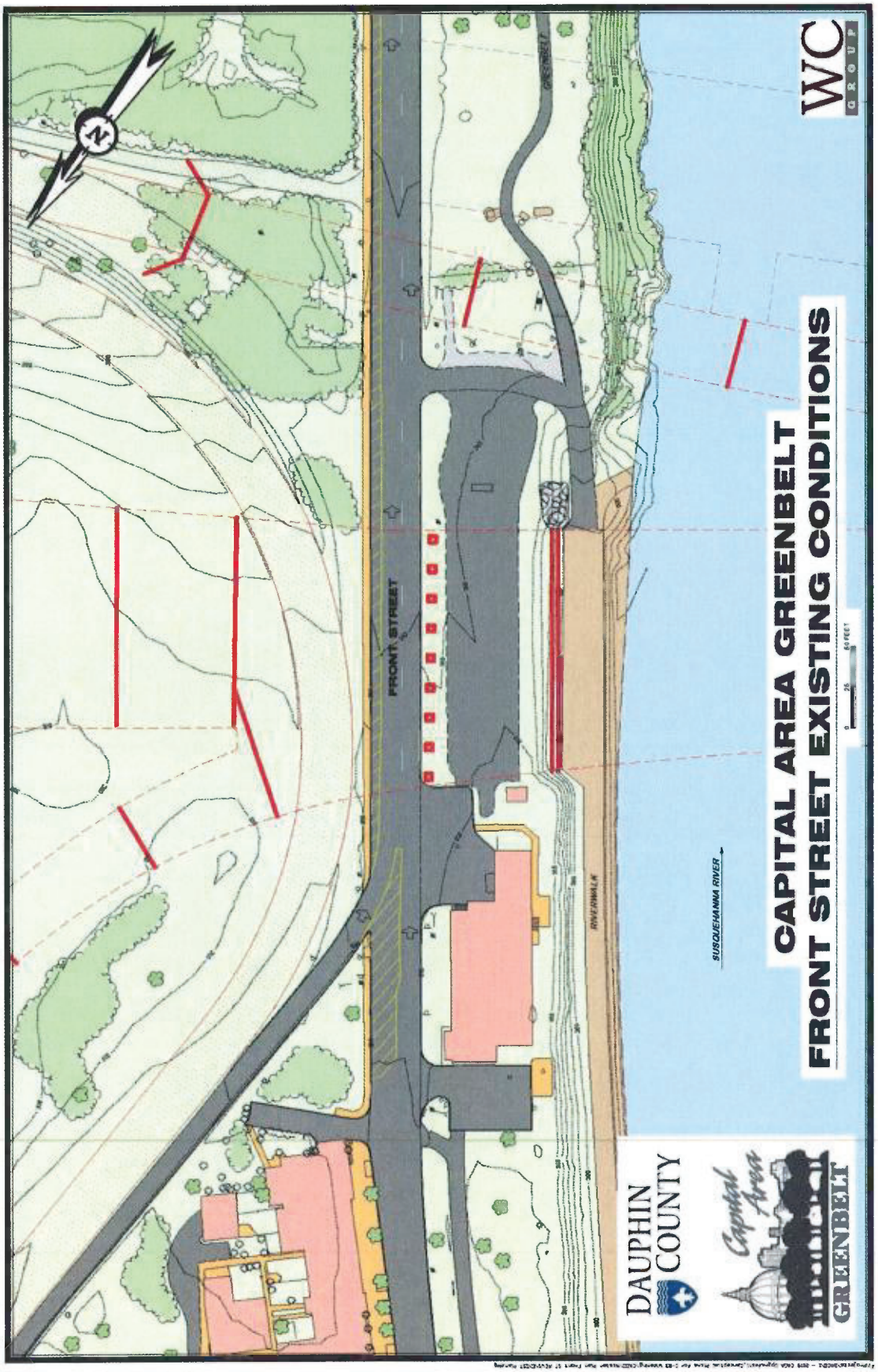
CAPITAL AREA GREENBELT
FRONT STREET EXISTING CONDITIONS
FRONT STREET
GREENBELT
RIVERWALK
SUSQUEHANNA RIVER
DAUPHIN COUNTY
Capital Area GREENBELT
WC GROUP

Figure 1

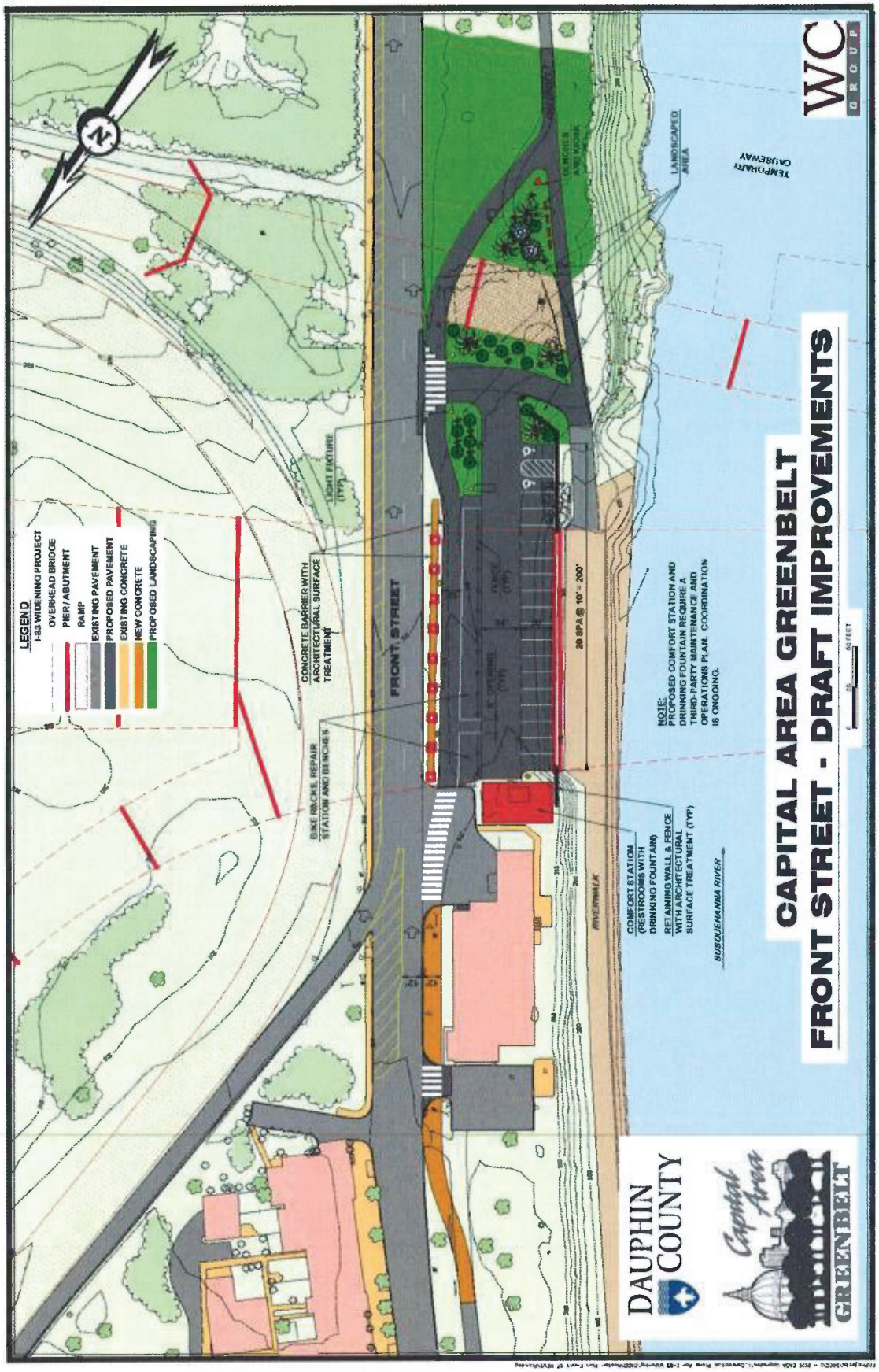
FRONT STREET - DRAFT IMPROVEMENTS
CAPITAL AREA GREENBELT
DAUPHIN COUNTY
Capital Area GREENBELT
WC GROUP
LEGEND
I-83 WIDENING PROJECT
OVERHEAD BRIDGE
PIER/ABUTMENT
RAMP
EXISTING PAVEMENT
PROPOSED PAVEMENT
EXISTING CONCRETE
NEW CONCRETE
PROPOSED LANDSCAPING
FRONT STREET
CONCRETE BARRIER WITH ARCHITECTURAL SURFACE TREATMENT
BIKE RACKS, REPAIR STATION AND BENCHES
LIGHT FIXTURE (TYP.)
20 SPA @ 10' = 200'
NOTE:
PROPOSED COMFORT STATION AND DRINKING FOUNTAIN REQUIRE A THIRD-PARTY MAINTENANCE AND OPERATIONS PLAN. COORDINATION IS ONGOING.
COMFORT STATION (RESTROOMS WITH DRINKING FOUNTAIN)
RETAINING WALL & FENCE WITH ARCHITECTURAL SURFACE TREATMENT (TYP.)
SUSQUEHANNA RIVER
RIVERWALK
LANDSCAPED AREA
TEMPORARY CAUSEWAY
N

Figure 2

Attachment 5: Coordination with Official with Jurisdiction

**Stakeholder Meeting – CAGA/COH/DAUPHIN/SAMBA**

**Date:** January 15, 2019
**Time:** 9:00 AM
**Location:** Large Conference Room, McCormick Taylor, Inc.

| ATTENDEES | REPRESENTING | EMAIL |
|---|---|---|
| John Bachman | PennDOT 8-0-Project Manager | jobachman@pa.gov |
| Sharon Okin | PennDOT 8-0-Env. Manager | sokin@pa.gov |
| Jeremy Ammerman | PennDOT-EPDS | jerammerma@pa.gov |
| Ryan Shiffler | PennDOT-HDTS | ryshiffler@pa.gov |
| Nicole Auker | PennDOT-EPDS | nauker@pa.gov |
| Jonathan Crum | FHWA | jonathan.crum@dot.gov |
| Jock Alfieri | HNTB (Sec 079) | jalfieri@HNTB.com |
| Lori Cole | JMT (Sec 079) | lcole@jmt.com |
| Becky Mease | McCormick Taylor (Sec 078) | bsmease@mtmail.biz |
| Diane Crispino | McCormick Taylor (Sec 078) | djcrispin@mtmail.biz |
| Michelle Goddard | McCormick Taylor (Sec 078) | mlgoddard@mtmail.biz |
| Angela Schreffler | McCormick Taylor (Sec 078) | amschreffler@mtmail.biz |
| Brehan McBride | Gannett Fleming (Sec 078) | bmcbride@gfnet.com |
| Travis Arentz | Gannett Fleming (Sec 078) | tarontz@gfnet.com |
| Carl Dickson | Dauphin Co. Parks and Rec/CAGA | cdickson@dauphinc.org |
| Mark Wilson | Wilson Consulting Group | markw@wcg-pc.com |
| Nate McCulloch | Wilson Consulting Group | natem@wcg-pc.com |
| Nick Loftus | SAMBA/Bicycle SC PA | SAMBA_president@yahoo.com |

*Invited, but not in attendance:*

| | | |
|---|---|---|
| Wayne Martin | City of Harrisburg | wsmartin@harrisburgpa.gov |
| Glenn Rowe | SAMBA | growe@kittelson.com |

## MEETING PURPOSE

The primary purpose of this meeting was to present the current project design concept for the recommended preferred alternative and discuss potential mitigation measure for the Capital Area Greenbelt.

*These meeting minutes only reflect information regarding the SR 0083 Sec 079 project. Please refer to additional meeting minutes prepared by the SR 0083 Sec 078 team for details and discussions regarding the SR 0083 Sec 078 project.*

## MEETING DISCUSSION

Mark Wilson stated that Dauphin County received grants from the PA Department of Conservation and Natural Resources (DCNR) and the PA Department of Environmental Protection (DEP) to improve the Capital Area Greenbelt. After three safety projects were completed on the Greenbelt with these grant funds, there was grant money remaining for which Dauphin County hired Wilson Consulting Group to develop conceptual plans for Greenbelt improvements within the Sec 079 project area, potentially including a formal trailhead under the SR 0083 bridge near the Susquehanna River.

John Bachman summarized project activities over the last couple of years. The project team met with CAGA to introduce the project, during the alternatives analysis process of the project (April 2018). A public meeting was held in October 2018, which presented a recommended preferred alternative pavement width and road alignment for the design of both Sec 079 and Sec 078 projects. He mentioned items such as retaining walls, slopes, and stormwater controls are being developed. Construction is anticipated to begin in 2022 and continue through 2030, with several different construction contracts. Today, we want to explain where the project is at the PennDOT process and discuss ideas of what organizations, such as CAGA, represented would like to see as a result of the project.

Jock Alfieri provided an overview of the current project design concepts being advanced in the Susquehanna River area. Jock mentioned that the current concept includes collector-distributor lanes that begin just east of the River. It also includes a new 2nd Street Ramp that will extend off the current bridge and go under Interstate 83 into the downtown Harrisburg. This ramp location will not preclude future improvements of the Susquehanna River Bridge improvements. Lori Cole provide a figure that depicts the project area and the Capital Area Greenbelt.

Mark explained that historically the area below the bridge along Front Street is utilized by trail users for an informal parking area. Mark stated that in this area it would be best to formalize the area as a trailhead by providing parking, lighting and improved access. John Bachman stated that improving the parking would be acceptable, however, PennDOT would restrict access in the area to limit box trucks or oversized vehicles from parking in the lot for protection of the bridge structure.

Lori Cole questioned where the upper trail officially extends through this area. Mark stated that that upper trail officially ends onto Front Street. He stated that additional improvements to better connect the upper trail to the parking area and the trail extending south away from the bridge area would be ideal.

Jock Alfieri mentioned that during construction of the viaduct and new ramp structures temporary closures would be necessary to ensure the safety of the trail users during overhead activities, such as removing or setting beams. Jock stated that PennDOT will have flaggers on the trail to control its use during these periods. Mark and Carl Dickson acknowledged that these temporary closures would be necessary.

Sharon Okin asked if the CAGA and Dauphin County would assist in the public dissemination of the proposed plans for the project so that users would be aware of the ongoing activities. Carl Dickson confirmed that both CAGA and the county park and recreation department would assist in this effort. He mentioned that CAGA would post notices to their website as part of the dissemination of information.

Mark Wilson stated that his design team would develop preliminary improvements that CAGA could recommend to PennDOT be included as part of the project. He requested that the project team provide any design files and engineering

specifications that they have available. John Bachman directed Jock Alfieri to provide this information.

Lori Cole asked that Mark or Carl coordinate with the City, who would be the agency with jurisdiction for the Capital Area Greenbelt. Mark confirmed that they would talk with the City.

Coordination should continue to funnel through John Bachman, and he will distribute to the appropriate people. A copy of the sign in sheet and draft minutes will be prepared by JMT, Inc. and be sent to all attendees for comments, before finalizing. Please see Sec 078 minutes of this meeting for details regarding discussions associated with the Sec 078 project.

Minutes Prepared by:
**JMT, Inc.**



Lori Cole

Attachment 5: Coordination with Official with Jurisdiction

**Stakeholder Meeting – CAGA/COH/DAUPHIN/SAMBA**

**Date:** February 19, 2019
**Time:** 9:00 AM
**Location:** Large Conference Room, McCormick Taylor, Inc.

| ATTENDEES | REPRESENTING | EMAIL |
|---|---|---|
| John Bachman | PennDOT 8-0-Project Manager | jobachman@pa.gov |
| Sharon Okin | PennDOT 8-0-Env. Manager | sokin@pa.gov |
| Jeremy Ammerman | PennDOT-EPDS | jerammerma@pa.gov |
| Jonathan Crum | FHWA | jonathan.crum@dot.gov |
| Jock Alfieri | HNTB (Sec 079) | jalfieri@HNTB.com |
| Robert Bolich | HNTB (Sec 079) | rbolich@HNTB.com |
| Lori Cole | JMT (Sec 079) | lcole@jmt.com |
| Becky Mease | McCormick Taylor (Sec 078) | bsmease@mtmail.biz |
| Diane Crispino | McCormick Taylor (Sec 078) | djcrispin@mtmail.biz |
| Michelle Goddard | McCormick Taylor (Sec 078) | mlgoddard@mtmail.biz |
| Angela Schreffler | McCormick Taylor (Sec 078) | amschreffler@mtmail.biz |
| Brehan McBride | Gannett Fleming (Sec 078) | bmcbride@gfnet.com |
| Carl Dickson | Dauphin Co. Parks and Rec/CAGA | cdickson@dauphinc.org |
| Mark Wilson | Wilson Consulting Group | markw@wcg-pc.com |
| Nick Loftus | SAMBA/Bicycle SC PA | SAMBA_president@yahoo.com |
| Wayne Martin | City of Harrisburg | wsmartin@harrisburgpa.gov |

## MEETING PURPOSE

The primary purpose of this meeting was to review and discuss preliminary design concepts for the Capital Area Greenbelt Association (CAGA) developed by Wilson Consulting Group (WCG) for the SR 0083, Section 079 Widening and Reconstruction Project in Dauphin County.

*These meeting minutes only reflect information regarding the SR 0083 Sec 079 project. Please refer to additional meeting minutes prepared by the SR 0083 Sec 078 team for details and discussions regarding the SR 0083 Sec 078 project.*

## MEETING DISCUSSION

Mark Wilson started the discussions by stating that WCG initiated their concept development based on the ideas provided to them by the SR 0083, Section 079 project team and from the discussions held during the January 15, 2019 meeting. Once they reviewed the project team concepts and obtained necessary design files including area contours, they advanced the concepts to include a bit more detail but admitted these are still draft concepts and not fully engineered solutions. The WCG displayed the draft concepts electronically during meeting. Mark admitted that Carl Dickson, the Capital Area Greenbelt, only saw the proposed concept one day before the meeting and no one else including the City of Harrisburg had seen the concepts.

Mark Wilson then stated that the proposed concept would include:

- Completion of the upper trail with a 12' multi-use path along Front Street, past the parking area and new ramp location to a merge point with the existing lower trail.
- Fencing to separate the multi-use path and the parking area. The fencing would provide protection to trail users and restrict access to the parking lot.
- Barrier with architectural surface treatment to protect trail users along Front Street.
- Parking for approximately 17 regular spots and 2 handicap spots.
- A retaining wall with fencing along the existing abutment to support proposed parking area.
- Landscaping with plantings.
- Bike racks, repair station, kiosk and benches
- Pedestrian scale lighting throughout the area.
- Redo the CAGA ramp area at the south side of the parking area.
- Comfort Station to include restrooms and drinking fountain.

John Bachman questioned what type of fence they were proposing. He asked if the fencing could be wooden or more decorative. Mark stated that they had not really thought that far in the design but thought that those types of fences could work.

Michelle Goddard questioned if the current storage shed would still be necessary. Carl Dickson stated that storage would still be needed in some form. He said that storage could be incorporated into the Comfort Station area.

Sharon Okin questioned if the intent of the parking area was for recreational trail users and not for commuter use. Sharon mentioned that during the week the parking area could be full and limit the potential for recreational users. It was confirmed that intent of the parking area is for recreational users. However, it was noted that there was no way to limit others from using the parking area. John Bachman stated that PennDOT would fence and provide other treatments that limit the potential for larger vehicles such as box truck or larger from using the lot for parking under the structure. He stated this is for security reasons.

Sharon Okin mentioned that coordination would need to be completed with Harrisburg River Rescue to confirm that the proposed design would accommodate their needs. Mark Wilson stated that they recognize that other parties would need to be involved with the design in the area. Wayne Martin asked if boat warning signage on the current bridge structure could be improved for boaters. Sharon Okin stated that as part of this project the current Aid to Navigation (ATON) plan would need to be evaluated to determine if it would meet the needs of the project. If this ATON would not meet the project needs, PennDOT would develop a new one and adjusts navigational signage accordingly. Lori Cole stated that the project team has scheduled a meeting with the Fish and Boat Commission to discuss the Susquehanna River water trail. These discussions would include consideration of the ATON.

John Bachman stated that he would need to confirm with Mike Keiser and Chris Drda that PennDOT would construct the comfort station. He further stated that if PennDOT built the station, an agreement for future maintenance and security would need to be developed with the City of Harrisburg. Wayne Martin stated that typically the Greenbelt maintenance is handled by the Capital Area Greenbelt Association, but he would work with PennDOT on developing agreements, as appropriate.

Wayne Martin also stated that Capital Region Water treatment plant will soon be renovated adjacent to I-83 on Front Street. Part of those renovations include providing a sidewalk along Front Street. He thought it would be good to coordinate the 12' multi-use path in that area now in order to eliminate rework in the future. Wayne mentioned he will investigate what is proposed on the sidewalk improvement.

Lori Cole questioned if the comfort location was set as it was close to the treatment plant and would not be placed on land that would be required as part of the project. She further asked if the City of Harrisburg or the Capital Region Water owned the property which the treatment plant sits on. Mark Wilson stated that the location of the comfort station was not set, and it could move anywhere within the area depending on utility service availability. He also said that the actual size of the comfort station was not really to scale. Wayne Martin also stated that the City may actually own the land where the treatment plant currently resides. He said typically, the land is not fully conveyed to an authority but is retained by the City. He would need to further investigate the actual land ownership.

Carl Dickson stated that the next step for the CAGA is to present the concept at the next board meeting which would be in mid-March as the February meeting was cancelled. After that meeting, he would be able to confirm the concept for PennDOT to use for the environmental document. John Bachman stated that overall, he thought that the concept developed could be advanced by PennDOT. However, he would need to confirm with others at the District and agreements on maintenance/security would need to be developed.

Mark Wilson asked what types of commitment agreements would need to be developed once a concept is agreed upon by all parties. Lori Cole stated that as part of the environmental and Section 4(f) documentation, PennDOT and FHWA intend to advance proposed use of the Capital Area Greenbelt as a Section 4(f) di minimis impact. She explained that as part of this process, documentation would be developed that outlines the commitments from all parties. Lori stated that based on the location of the resource the City of Harrisburg would be considered the agency with jurisdiction, which means they would sign all Section 4(f) documentation. Wayne Martin asked if the signatures would require council action. Sharon Okin stated that on past projects Wayne Martin signed the documents. Jon Crum also stated that the City would need to provide concurrence that the proposed project does not adversely affect the activities, features, and attributes that qualify the property for protection under Section 4(f).

Jon Crum also mentioned that public outreach is part of the Section 4(f) process. The proposed project and the proposed concepts would need to be available for public review and comment. The City would be provided all comments for consideration prior to their concurrence on this project. John Bachman stated that the information would be provided to the Capital Area Greenbelt for inclusion on their website, which Carl Dickson confirmed, and that would meet the public review requirement.

Sharon Okin stated that as the project advances, coordination will continue to address any highway design changes that may occur. Depending on the extent of the changes, she stated that the Section 4(f) documentation and associated commitments may need to be refined.

John Bachman ended the discussions by stating that the project team would work on developing the necessary project documents while the CAGA reviews the proposed concepts. He also stated that he would follow-up with others at PennDOT regarding the comfort station. The project team will follow-up with the City and CAGA as we move forward.

Minutes Prepared by:
**JMT, Inc.**



Lori Cole

Attachment 6:
Public Involvement Information
Capital Area Greenbelt
Section 4(f) De Minimis Use
DCPR March 27, 2019
Facebook Post

**Dauphin County Parks & Recreation**
13 hrs ·

Like

CHANGES TO THE CAPITAL AREA GREENBELT

Major improvements are planned for Interstate 83 in 7-10 years that will impact the Capital Area Greenbelt at two locations:

1. Front Street at the River
Existing: www.wcg-pc.com/xfs.pdf
Proposed: www.wcg-pc.com/fs.pdf

2. City Park Drive at the Rutherford Spring House
Existing: www.wcg-pc.com/xcpd.pdf
Proposed: www.wcg-pc.com/cpd.pdf

The Board of Directors of the Capital Area Greenbelt and Dauphin County have worked with consultants to come up with proposed improvements during this construction that are linked above.

Your opinion matters!

Feedback on the proposals can be sent to PennDot at http://i-83beltway.com/contact-us.php
All comments should be submitted by April 7, 2019.

For updates on the I-83 expansion project, enter your contact information here - http://i-83beltway.com/contact-us.php

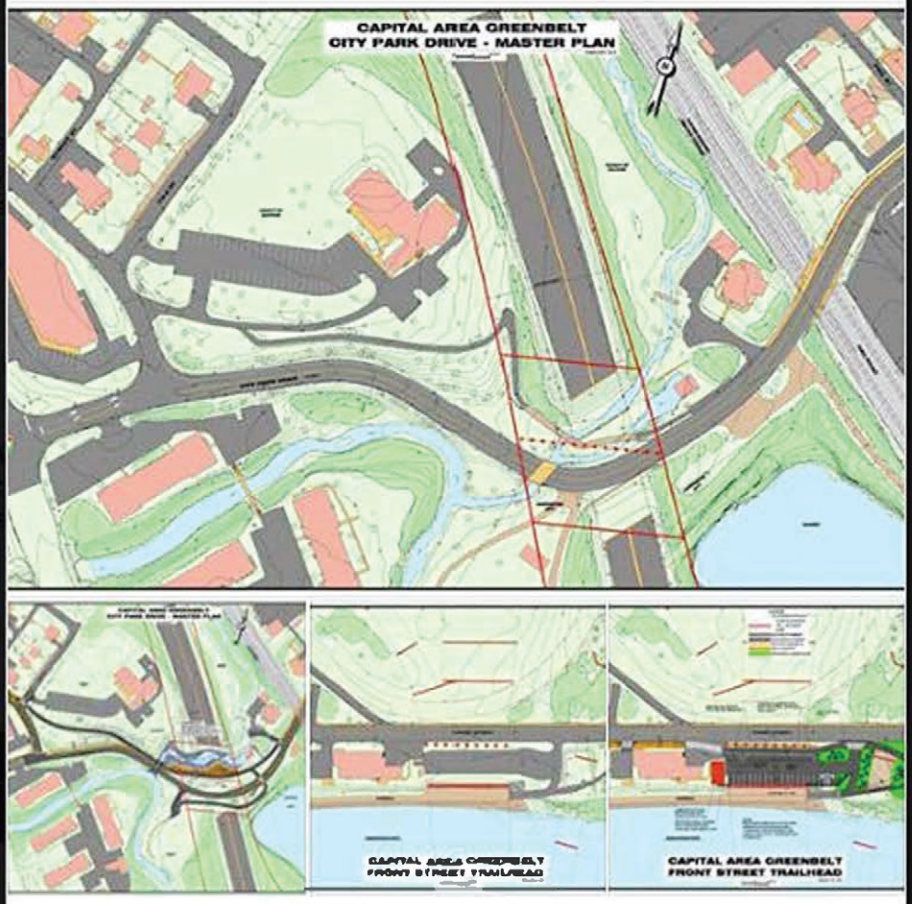


13 10 Shares

Like Comment Share

Attachment 6: Public Involvement Information
Capital Area Greenbelt, Section 4(f) De Minimis Use
DCPR March 27, 2019 Email Blast



Wednesday, March 27, 2019 - Upcoming Events View this email in your browser

DAUPHIN COUNTY
PENNSYLVANIA
PARKS & RECREATION




# Upcoming Events

- Looking for a job or other community resources? Head out to the **Dauphin County Adult and Youth Job and Resource Fair** on Saturday, March 30th at the Harrisburg Mall!
- Did you ever wonder what the woods would be like without trees? Join us at Wildwood Park on Saturday, April 6th for **Into the Woods** - a workshop for Scouts! Insider tip: This program is geared towards earning a badge, but you don't have to be a scout to register!
- **Kids Discover: Fish & Aquatic Critters** will be held at Wildwood Park on Sunday, April 7th. This program is perfect for kids 5 - 10 years old and is just $5!
- We need your feedback! Part of the upcoming I-83 improvements will impact the **Capital Area Greenbelt**. See below for more information on how you can get involved.
- Join us at Wildwood Park for an **Art In The Wild Lecture by Ted Prescott**, a local PA sculptor and writer, on Thursday, April 11th.

Attachment 6: Public Involvement Information
Capital Area Greenbelt, Section 4(f) De Minimis Use
DCPR March 27, 2019 Email Blast

- **Mrs. Reily's Tea** will be held at Fort Hunter Park on Sunday, May 19th. Begin the afternoon with award winning journalist and author Diane McCormick as she takes us on a pub crawl of 12 Pennsylvania taverns with rebellious pasts, where the stakes were high and the rum was flowing. This event typically sells out, so get your tickets now!

**Dauphin County is the place to be all Spring!**
**#DestinationDauphinCounty**

Attachment 6: Public Involvement Information
Capital Area Greenbelt, Section 4(f) De Minimis Use
DCPR March 27, 2019 Email Blast

# Dauphin County Commissioners

Jeff Haste | Mike Pries | George P. Hartwick, III

# Dauphin County Adult & Youth Job & Resource Fair

## Let's get ready to spring into action!

Are you looking for employment, summer internships, apprenticeships, career, trade and college opportunities? **Then the 8th annual "One-Stop Shop" is the place to be!**

**When: Saturday, March 30, 2019**
**11:00 a.m. to 3:00 p.m.**
**Where: Harrisburg Mall – Center Court**
**3501 Paxton Street, Harrisburg, PA 17111**




Adults and youth (16 and over) who are looking for employment & other opportunities – come ready to impress for YOUR future success!

Resources of all types to assist with barriers to success:

- Legal information for those dealing with criminal records
- Transportation
- Information on how to get Real ID
- Health screenings and where to get health forms completed for work
- Where to go for internet access in the area
- How to connect with Child Care
- Additional array of other helpful resources for the entire family



www.DauphinCounty.org

SPECIAL FUN & FITNESS ACTIVITIES for the entire family!

11:00 a.m. – 1:00 p.m.





11:00 a.m. - Zumbalicious
with Charisse Grayer & Sandy Johnson

12:00 p.m. – Zumba
with Cat Cormany & Ewa Dee

Visit all the employment & resource tables and receive a raffle ticket to win prizes; kid zone area for the whole family!

For more information about this event, contact
Helen Spence at hspence@dauphinc.org
or 717-574-8810

Special thanks to our partner CareerLink!

Attachment 6: Public Involvement Information
Capital Area Greenbelt, Section 4(f) De Minimis Use
DCPR March 27, 2019 Email Blast




**Register now!**

Attachment 6: Public Involvement Information
Capital Area Greenbelt, Section 4(f) De Minimis Use
DCPR March 27, 2019 Email Blast




Register now!

Attachment 6: Public Involvement Information
Capital Area Greenbelt, Section 4(f) De Minimis Use
DCPR March 27, 2019 Email Blast

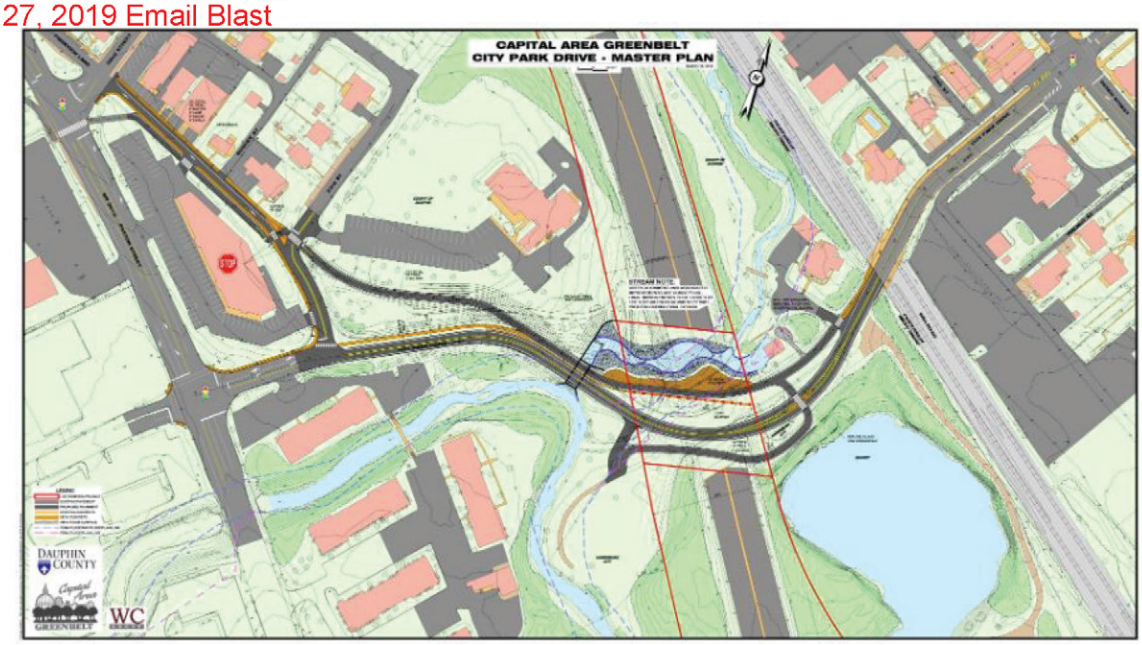


# CHANGES TO THE CAPITAL AREA GREENBELT

Major improvements are planned for Interstate 83 in 7-10 years
that will impact the Capital Area Greenbelt at two locations:

1. Front Street at the River
Existing: www.wcg-pc.com/xfs.pdf
Proposed: www.wcg-pc.com/fs.pdf

2. City Park Drive at the Rutherford Spring House
Existing: www.wcg-pc.com/xcpd.pdf
Proposed: www.wcg-pc.com/cpd.pdf

The Board of Directors of the Capital Area Greenbelt and Dauphin County have worked with consultants to come up with proposed improvements during this construction that are linked above.

## Your opinion matters!

Click here to give PennDOT feedback on the proposals.
All comments should be submitted by April 7, 2019.

For updates on the I-83 expansion project,
click here to enter your contact information.

Attachment 6: Public Involvement Information
Capital Area Greenbelt, Section 4(f) De Minimis Use
DCPR March 27, 2019 Email Blast

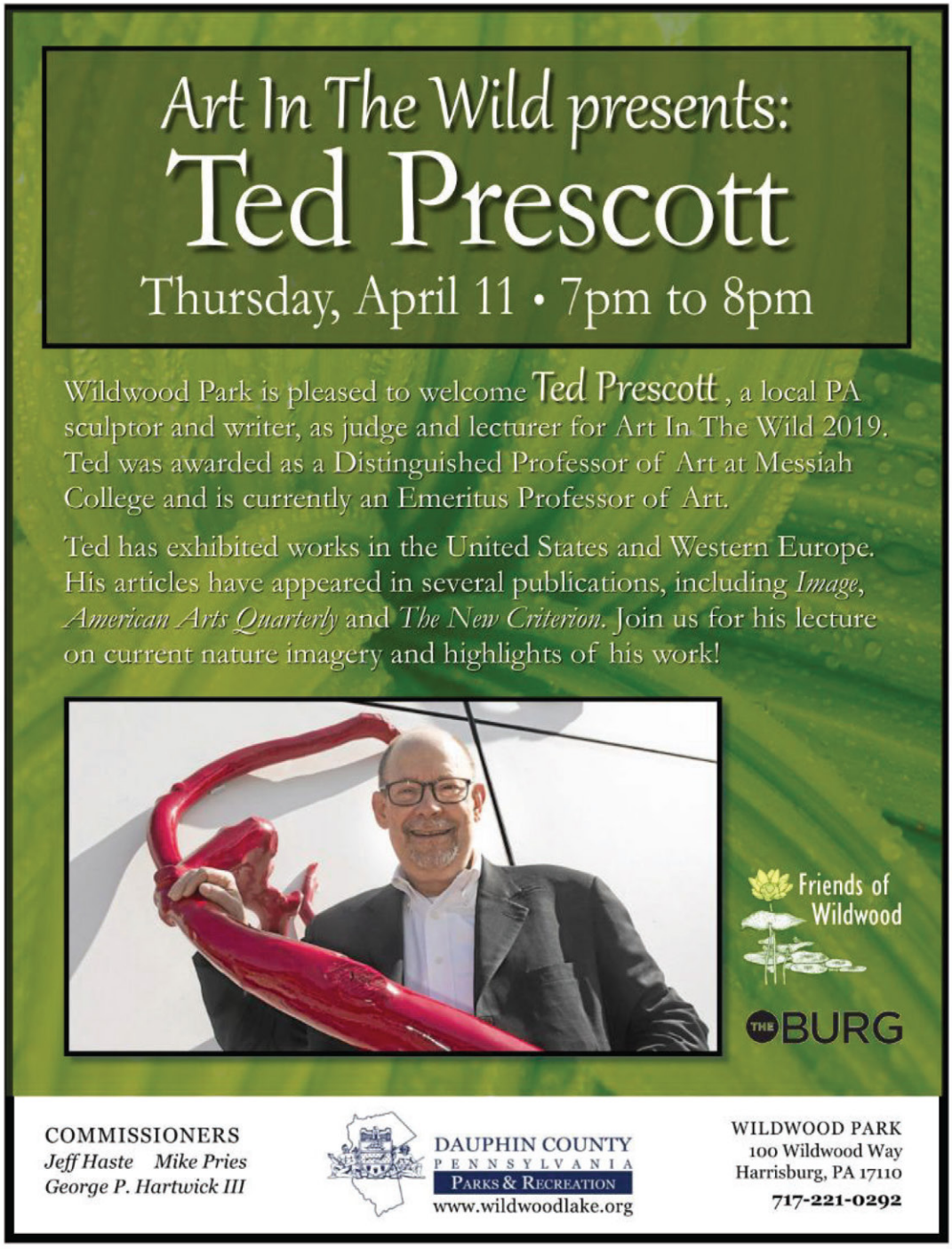

Attachment 6: Public Involvement Information
Capital Area Greenbelt, Section 4(f) De Minimis Use
DCPR March 27, 2019 Email Blast

# Mrs. Reily's Tea



**Sunday, May 19**
**One Seating 1:00 pm**
**$30 per person, $25 members**

* Join local journalist and author **Diane McCormick** on an illustrated pub crawl, highlighting 12 Pennsylvania pubs.
* **Savor** homemade scones, fancy cupcakes, homemade mousse cups, bite-size savories and unending cups of tea.
* View Fort Hunter Mansion's **Needle Arts Exhibit**.

For more information & to reserve tickets
visit www.forthunter.org

**Buy Tickets Now!**

Attachment 6: Public Involvement Information
Capital Area Greenbelt, Section 4(f) De Minimis Use
DCPR March 27, 2019 Email Blast



**Dauphin County Commissioners:**

Jeff Haste

George P. Hartwick, III

Mike Pries

Facebook Twitter Website

*Copyright © 2019 Dauphin County Parks & Recreation, All rights reserved.*

unsubscribe from this list update subscription preferences

mailchimp

OS-600C (11-15)

pennsylvania
DEPARTMENT OF TRANSPORTATION

September 16, 2020

Mr. Carl Dickson
President, Capital Area Greenbelt Association
C/O Dauphin County Parks and Recreation
Tavern House
100 Fort Hunter Road
Harrisburg, PA 17110

RE: SR 0083, Section 079
Capital Area Beltway Association Tree Planting along the Susquehanna River

Dear Mr. Dickson,

This letter is regarding the potential impacts to the Capital Area Greenbelt (Greenbelt) property located along the Susquehanna River in the City of Harrisburg, Dauphin County as a result of the State Route (SR) 0083, Section 079 widening and reconstruction project. As you discussed with our consultant, the construction of the northbound Second Street exit ramp will require the use of a temporary causeway into the Susquehanna River. This causeway location could impact up to 29 trees some of which, it is our understanding, were planted through Greenbelt Association efforts. Of these trees, nine trees were identified that had a memorial plaque associated with their planting. See attached map for proposed causeway location.

As a result of the potential to impact some of these trees and plaques, the Pennsylvania Department of Transportation (PennDOT) would like to propose the following mitigation commitments:

- During final design, PennDOT and its consultants will work to minimize the footprint and potential impact associated with the causeway installation and operation.
- PennDOT will coordinate with the Greenbelt Association the removal and storage of the plaques, prior to their removal.
- Near the end of construction, PennDOT will plant replacement trees and again work with the Greenbelt Association for the installation of the memorial plaques and necessary updates to the on-site tree directory. While the replacement trees will be younger and smaller in diameter and try to match the original species, PennDOT will meet with the Greenbelt Association to confirm the native tree species to be used as replacement prior to installation.
- These commitments will be in addition to those previously discussed and documented.

Please review the attached map and consider the commitments outlined in this letter. After review of the potential impacts resulting from the causeway construction and operation, PennDOT feels that the construction of the SR 0083, Section 079 project will have no permanent impacts to the Greenbelt and will not alter or affect the use of the trail property.

If you agree with this assessment and the proposed commitments, please sign below and return to John Bachman at JOBachman@pa.gov.

If you have any questions, please call me at 717.783.4519.

Sincerely,

John M Bachman

John Bachman
Sr. Project Manager

Carl Dickson per 10-21-20 Board Meeting 10-30-20

Carl Dickson, President
Capital Area Greenbelt Association

Date

# SR 0083, SECTION 079 POTENTIAL CAUSEWAY LOCATION

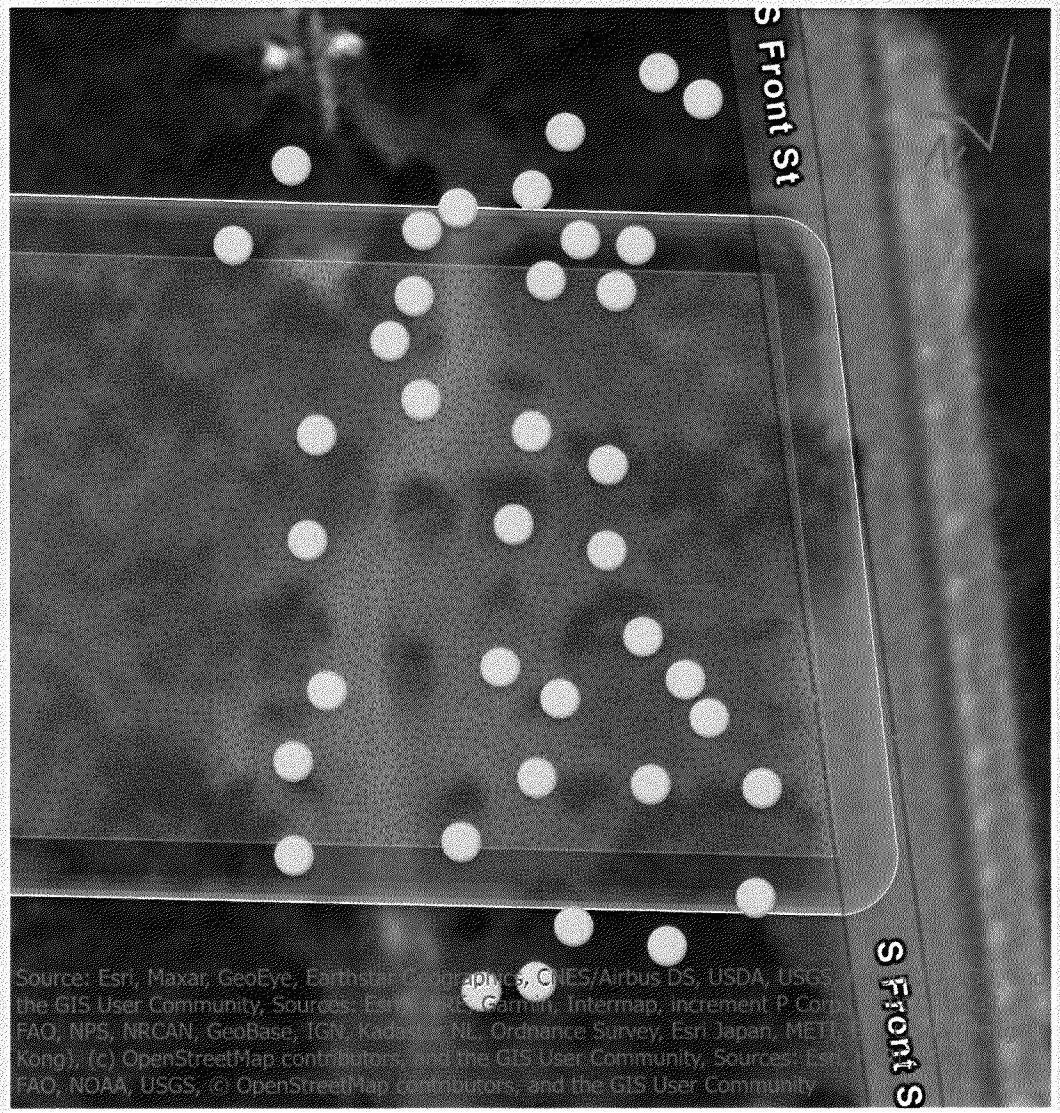


## SITE LOCATION

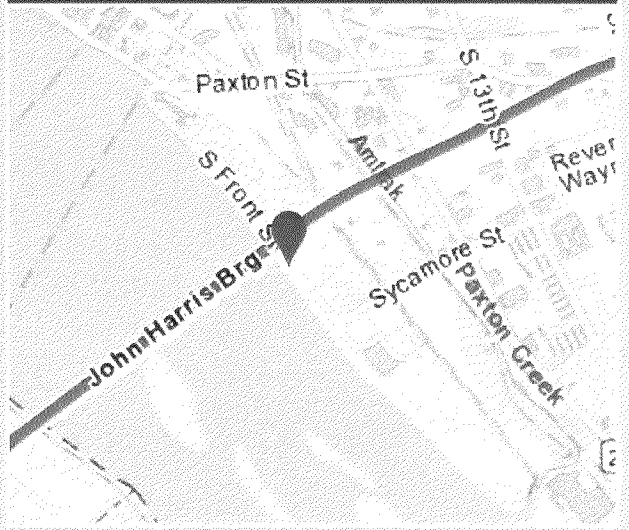


## LEGEND

Causeway

Causeway Ten-Foot Buffer

Potential Impacted Tree

0 25 50 US Feet

# CAPITAL AREA GREENBELT TREES SUMMARY REPORT

## Background

Memorial tree plaques were discovered on multiple trees during detailed investigations of the causeway construction area. The existence of these plaques was not identified during coordination with the Capital Area Greenbelt Association, nor during coordination with the City of Harrisburg.



*Example Plaque at base of Memorial Tree*

## Field Summary

JMT environmental staff completed a field inspection on June 5, 2020 to inventory all existing trees within the causeway construction area. Each identified tree was given a unique ID and inventoried based on species type, diameter at breast height (DBH), memorial status, and memorial plaque contents. Some trees did not have a memorial plaque designating them as a memorial, these trees were categorized as unknown memorials in the inventory. There was one (1) tree identified (ID: T12) that had a stake for a memorial plaque, but the plaque was missing. Notes on this tree as well as the other trees are located in the full tree inventory list located in ***Appendix A: Memorial Tree Survey Summary***.



*Directory of Memorial Tree Honorees at Site*

## Impact Analysis & Methodology

An impact analysis was completed to determine the quantity and type of trees that may be affected by the construction of the causeway. The analysis was completed by overlaying the tree inventory data with the design plans for the causeway in ArcGIS. A ten-foot buffer was added around the causeway footprint to encompass any potential impacts to tree canopies near the causeway limits that could impeded machinery or construction activities. Any tree that intersected with either the causeway or the ten-foot buffer area around the causeway were identified as having a potential impact. The analysis results are on the following page.

## MEMORIAL TREES INVENTORY

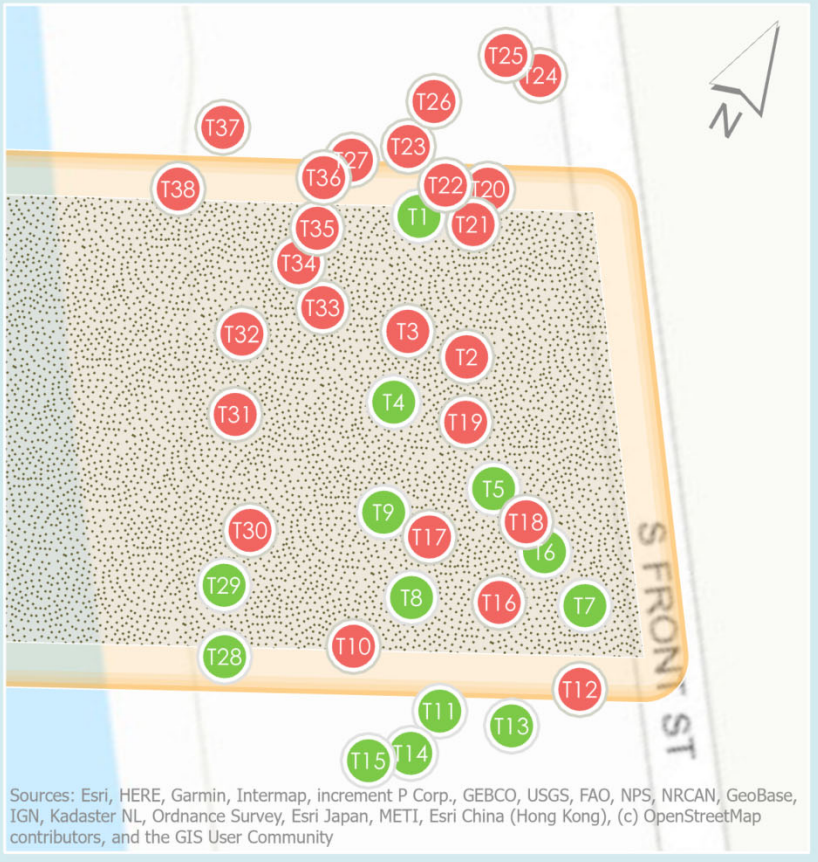


### SITE LOCATION

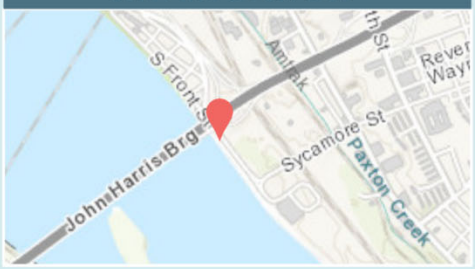


### LEGEND

Causeway

Causeway Ten-Foot Buffer

**Inventoried Trees**

Memorial Unknown

Memorial Plaque Identified

0 25 50 US Feet

## Results

In total, 38 trees were inventoried. Of the 38 trees, 29 trees were identified as having a potential to be impacted by the construction of the causeway ***(See Table 1: Impacted Trees)***. Twenty (20) of the trees identified did not have a memorial plaque and nine (9) trees contained a memorial plaque.

**TABLE 1: IMPACTED TREES**

| Memorial Unknown = 20 | Memorial Plaque Identified = 9 |
|---|---|
| T2 | T1 |
| T3 | T4 |
| T10 | T5 |
| T12 | T6 |
| T16 | T7 |
| T17 | T8 |
| T18 | T9 |
| T19 | T28 |
| T20 | T29 |
| T21 | |
| T22 | |
| T27 | |
| T30 | |
| T31 | |
| T32 | |
| T33 | |
| T34 | |
| T35 | |
| T36 | |
| T38 | |

## Recommendations

PennDOT should coordinate with the Capital Area Greenbelt Association and the City of Harrisburg to replace (in-kind) the memorial trees that will be disturbed by the construction of the causeway. The replacement trees should be of the same species as the disturbed trees and have memorial plaques to match the previous plaques. Additionally, PennDOT should request that the Capital Area Greenbelt Association or the City of Harrisburg provide any additional information they may have on the unknown memorial trees to confirm their status. Ensuring that any memorial plaques that may have been damaged or destroyed are also replaced.



*Memorial Tree*

## APPENDIX A: MEMORIAL TREE SURVEY SUMMARY

| Tree ID | Common Name | Scientific Name | DBH (inches) | Plaque Information | Comments |
|---|---|---|---|---|---|
| T1 | Japanese Cherry | *Prunus serrulata* | 5.5 | In Memory of Isabella & Antonio DeGregorio and Family | spreading branches |
| T2 | Japanese Cherry | *Prunus serrulata* | 10.7 | Susan E. Ebersole - 1955-1999 - In Loving Memory From Her Friends | thick trunk with spreading branches |
| T3 | Japanese Cherry | *Prunus serrulata* | 4.2 | In Loving Memory of Robert Lee Porter - March 27, 1948 - November 14, 2011 | small tree |
| T4 | Weeping Cherry | *Prunus subhirtella* 'Pendula' | 5.8 | In Memory of Ted Wagner, III | |
| T5 | Flowering Dogwood | *Cornus florida* | 1.0 | In Loving Memory Of Jacob L. Susskind - 1933-2008 | small tree, tree tube present |
| T6 | Japanese Cherry | *Prunus serrulata* | 4.0 | In Memory of Our Steelton Cousin - Elaine Hawkins-Childs - 11/20/43-2/4/12 | |
| T7 | Japanese Cherry | *Prunus serrulata* | 6.2 | In Loving Memory Of Agatha V. Davis "Nanny" - February 14, 1909 - October 25, 1982 -You will live forever in our hearts | |
| T8 | Japanese Cherry | *Prunus serrulata* | 4.0 | In Loving Memory Of Charles A. Fedullo - 1938-1984 | small tree |
| T9 | Japanese Cherry | *Prunus serrulata* | 2.3 | Ava Grace Kalbach - January 22, 2016 - Deeply Loved | small tree, tree tube present |
| T10 | Japanese Cherry | *Prunus serrulata* | 4.2 | stake for Section B present at tree, but no plaque observed | |
| T11 | Japanese Cherry | *Prunus Serrulate* | 5.9 | In Loving Memory of John C. Pfromm 1951-1992 | |

| Tree ID | Common Name | Scientific Name | DBH (inches) | Plaque Information | Comments |
|---|---|---|---|---|---|
| T12 | Eastern Redbud | *Cercis canadensis* | 8.0 | unknown - stake present, but plaque missing | tree decorated |
| T13 | Japanese Cherry | *Prunus serrulata* | 12.0 | In Loving Memory Of Kimberly Jo Topper - 1976-1982 | thick trunk with spreading branches |
| T14 | Japanese Cherry | *Prunus serrulata* | 5.8 | In Loving Memory Of Robert J. Delasin - 1925-1999 | spreading branches |
| T15 | Japanese Cherry | *Prunus serrulata* | 1.5 | For Jeff - Love, Aunt Cynthia - 2004 | small tree |
| T16 | Japanese Cherry | *Prunus serrulata* | 10.7 | unknown - no plaque observed | thick trunk with spreading branches |
| T17 | Mazzard Cherry | *Prunus avium* | 9.0 | unknown - no plaque observed | thick trunk with spreading branches |
| T18 | Japanese Cherry | *Prunus serrulata* | 9.8 | unknown - no plaque observed | thick trunk with spreading branches |
| T19 | Mazzard Cherry | *Prunus avium* | 9.3 | unknown - no plaque observed | thick trunk with spreading branches |
| T20 | Japanese Maple | *Acer palmatum* | multistemmed | unknown - no plaque observed | spreading branches |
| T21 | Weeping Forsythia | *Forsythia suspensa* | multistemmed | unknown - no plaque observed | dense shrub |
| T22 | Dogwood shrub | *Cornus* sp. | multistemmed | unknown - no plaque observed | dense shrub |
| T23 | Eastern White Pine | *Pinus strobus* | 8.7 | unknown - no plaque observed | dead |
| T24 | Green Ash | *Fraxinus pennsylvanica* | 16.6 | large roadside tree - likely not planted as part of park | large roadside tree |

| Tree ID | Common Name | Scientific Name | DBH (inches) | Plaque Information | Comments |
|---|---|---|---|---|---|
| T25 | Mazzard Cherry | *Prunus avium* | 3.0 | unknown - no plaque observed | small tree |
| T26 | Mazzard Cherry | *Prunus avium* | 12.0 | unknown - no plaque observed | thick trunk with spreading branches |
| T27 | Flowering Dogwood | *Cornus florida* | 9.0 | unknown - no plaque observed | |
| T28 | Weeping Cherry | *Prunus subhirtella* 'Pendula' | 2.8 | In Memory Of Lydia Foose | small tree |
| T29 | Weeping Cherry | *Prunus subhirtella* 'Pendula' | 3.8 | In Loving Memory of J. Cree Unger - Wonderful Friend and Generous Spirit - Tri County Association for the Blind | small tree |
| T30 | Weeping Cherry | *Prunus subhirtella* 'Pendula' | 7.2 | unknown - no plaque observed | spreading branches |
| T31 | Weeping Cherry | *Prunus subhirtella* 'Pendula' | 10.7 | unknown - no plaque observed | thick trunk with spreading branches |
| T32 | Weeping Cherry | *Prunus subhirtella* 'Pendula' | 8.7 | unknown - no plaque observed | thick trunk with spreading branches |
| T33 | Chinese Privet | *Ligustrum lucidum* | 7.0 | unknown - no plaque observed | |
| T34 | Fustet | *Cotinus coggygria* | 9.5 | unknown - base of tree decorated, but no plaque observed | |
| T35 | Dogwood shrub | *Cornus* sp. | multistemmed | unknown - no plaque observed | dense shrub |

| Tree ID | Common Name | Scientific Name | DBH (inches) | Plaque Information | Comments |
|---|---|---|---|---|---|
| T36 | Flowering Dogwood | *Cornus florida* | 8.4 | unknown - no plaque observed | |
| T37 | Flowering Dogwood | *Cornus florida* | 6.9 | unknown - no plaque observed | |
| T38 | Mazzard Cherry | *Prunus avium* | 8.5 | unknown - no plaque observed | |

HARRISBURG
I-83 CAPITAL BELTWAY
SR 0083, SECTION 094
DAUPHIN COUNTY, PA

# Appendix E
## EA DISTRIBUTION LIST

# Distribution List

## Federal Agencies

| Agency | Contact |
|---|---|
| Advisory Council on Historic Preservation | *Eastern Office of Review*<br>Attn: Preservation Specialist |
| Federal Emergency Management Agency | Attn: Mitigation Division |
| U.S. Army Corps of Engineers | *Baltimore District*<br>Attn: Chief, Regulatory Branch |
| U.S. Fish and Wildlife Service | *Pennsylvania Field Office* |
| U.S. Department of Health & Human Services | *Centers for Disease Control & Prevention*<br>Attn: Chief, Special Programs Group |
| U.S. Department of Housing & Urban Development | *Pennsylvania State Office*<br>Attn: Environmental Officer |
| U.S. Department of Interior | *Office of Environmental Policy and Compliance*<br>Attn: Director |
| U.S. Department of Transportation | *Federal Transit Administration*<br>*Office of Planning and Program Development*<br>Attn: Transportation Program Specialist |
| U.S. Environmental Protection Agency | *Region III (3ES43)*<br>Attn: Chief, Environmental Assessment and Protection Division |
| U.S. Environmental Protection Agency | *Office of Federal Activities* |
| U.S. Department of Agriculture | *National Resources Conservation Service*<br>Attn: Water Resources Department |

## State Agencies

| Agency | Contact |
|---|---|
| Pennsylvania Department of Agriculture | *Bureau of Farmland Preservation*<br>Attn: Director |
| Pennsylvania Department of Community and Economic Development | *Policy Office*<br>Attn: Director |
| Pennsylvania Department of Conservation and Natural Resources | *Office of Policy*<br>Attn: Director |
| Pennsylvania Department of Environmental Protection | *Office of Policy*<br>Attn: Director |
| Pennsylvania Department of Environmental Protection | *Southcentral Regional Office* |
| Pennsylvania Department of Health | *Office of Policy*<br>Attn: Executive Policy Assistant |
| Pennsylvania Fish and Boat Commission | *Environmental Services Division*<br>Attn: Chief, Environmental Services Division |
| Pennsylvania Game Commission | *Environmental Planning and Habitat Protection*<br>Attn: Chief, Environmental Planning and Habitat Protection Division |
| Pennsylvania Game Commission | *South Central Region* |

| Agency | Contact |
|---|---|
| Pennsylvania Historical and Museum Commission | *Bureau for Historic Preservation*<br>Attn: Chief, Division of Archaeology and Protection |
| Public Utility Commission | *Utility Office*<br>Attn: Administrator |
| Tri-County Regional Planning Commission | Attn: Executive Director |
| Cumberland County | Attn: Director of Planning |

# Native American Tribes

- Absentee-Shawnee Tribe of Indians of Oklahoma
- Cayuga Nation
- Delaware Nation, Oklahoma
- Delaware Tribe of Indians
- Eastern Shawnee Tribe of Oklahoma
- Seneca-Cayuga Nation
- Shawnee Tribe
- Tuscarora Nation

HARRISBURG
I-83 CAPITAL BELTWAY
SR 0083, SECTION 094
DAUPHIN COUNTY, PA

# Appendix F
## LIST OF PREPARERS

# List of Preparers

| Name and Title | Organization | EA Role | Education | Years |
|---|---|---|---|---|
| Jennifer Crobak<br>Acting Director of Planning, Environment and Finance | FHWA,<br>PA Division | FHWA Approver | B.A. History<br>M.S. Community and Regional Planning | 15 |
| Camille Otto<br>Deputy Division Administrator | FHWA,<br>PA Division | FHWA Reviewer | B.S. Biology | 26 |
| Jon Crum<br>Team Leader, Planning and Environment | FHWA,<br>PA Division | FHWA Reviewer | B.S. Biology<br>M.S. Environmental Science and Management | 18 |
| Julia Moore<br>Senior Environmental Specialist | FHWA,<br>PA Division | FHWA Reviewer | B.S. Biology | 14 |
| John Bork<br>Transportation Engineer | FHWA,<br>PA Division | FHWA Reviewer | B.S. Civil Engineering | 30+ |
| Marwa Said, PE<br>Assistant Bridge Engineer | PennDOT,<br>District 8-0 | Project Manager | B.S. Architecture Engineering | 10 |
| Derek Mitch, PE<br>District Bridge Engineer | PennDOT,<br>District 8-0 | District Bridge Engineer | B.S. Engineering<br>M.S. Engineering | 14 |
| Sharon Okin<br>District Environmental Manager | PennDOT,<br>District 8-0 | Environmental Reviewer | B.S. Geology and Geophysics<br>M.S. Environmental Science | 28 |
| Jeremy Ammerman<br>Environmental Supervisor, NEPA | PennDOT,<br>District 8-0 | Historic Properties | B.A. History<br>M.A. Public History | 17 |
| Steve McDougal<br>Archaeologist | PennDOT,<br>District 8-0 | Archaeology | M.A. Anthropology | 30 |
| Drew Ames<br>Chief, Environmental Policy and Development Division | PennDOT,<br>Central Office | Environmental Reviewer | B.H. Communications<br>M.S. Community and Regional Planning | 27 |
| Nicole Auker<br>Environmental Planning Manager | PennDOT,<br>Central Office | Environmental Reviewer | M.S. Community and Regional Planning | 8 |
| Bryon Ruhl<br>Environmental Planner II | PennDOT,<br>Central Office | Environmental Reviewer | B.S. Environmental Resource Management | 24 |
| Michelle Adolini, PE<br>Design Services Engineer | PennDOT,<br>District 8-0 | Reviewer | B.S. Civil Engineering<br>M.S. Civil Engineering | 21 |

| Name and Title | Organization | EA Role | Education | Years |
|---|---|---|---|---|
| Kenda Gardner<br>Deputy Chief Counsel | PennDOT, Office of Chief Counsel | Reviewer | B.S. Chemistry<br>J.D. | 29 |
| Diane Nulton<br>Senior Environmental Project Manager | HDR | EA Project Manager | B.S. Biology/ Ecology | 36 |
| John McPherson, AICP<br>Environmental Services Director | HDR | Environmental Lead | B.A. Math/ Economics<br>M.U.P. | 31 |
| Sarah Neff<br>Senior Strategic Communications Coordinator | HDR | Public Outreach Coordinator | B.A Public Relations<br>B.A. English | 7 |
| Andrea Cline, PWS, CPESC<br>Senior Environmental Scientist | HDR | Natural Resources | B.S. Biology<br>M.S. Conservation Biology and Sustainable Development | 23 |
| Laurie Cummings<br>Senior Planner | HDR | Social Environment | B.A. Geography<br>M.U.P | 25 |
| Taylor Horne<br>Environmental Planning Lead | HDR | Cultural Resources Transportation | B.A. Environmental Policy and Planning<br>M.A. Public and International Affairs | 16 |
| Linda Smith<br>Senior Environmental Planner | HDR | Physical Environment | B.E. Engineering Sciences<br>M.S.E. Environmental Engineering | 18 |
| Jenn Walsh, PE<br>Traffic and Planning Section Manager | HDR | Traffic Diversion Analysis | Bachelor of Civil Engineering<br>Master of Civil Engineering | 29 |
| Ken O'Brien, PE<br>Senior Project Manager | HDR | Traffic Diversion Analysis | Bachelor of Civil Engineering | 28 |
| Audrey Heffernan<br>Senior Environmental Planner | HDR | Environmental Justice | B.A. Math<br>M.A. Math<br>M.S. City & Regional Planning | 29 |
| Elizabeth Grover<br>Technical Editor/ Environmental Planner | HDR | Technical Editor | B.A. Anthropology<br>M.A. Anthropology | 23 |
| Frank Brilhante<br>GIS Manager | HDR | GIS Analysis | Bachelor of Engineering<br>Master of Environmental Engineering | 30 |

| Name and Title | Organization | EA Role | Education | Years |
|---|---|---|---|---|
| Kathleen Krommes, ENV SP<br>Senior Environmental Planner | HDR | Environmental Analysis | B.S. Chemical Engineering | 36 |
| Scott Duncanson, AICP, LEED GA, ENV SP<br>Senior Environmental Planner / Project Manager | Gannett Fleming | QA/QC | B.A. Political Science<br>M.U.A. Urban Affairs | 38 |
| Barbara Weedon, PWS, ENV SP<br>Senior Project Environmental Specialist | Gannett Fleming | Wetlands/Natural Resources | B.S. Biology<br>M.S. Community Ecology | 28 |
| Claire Woleslagle, ENV SP<br>Senior Environmental Specialist | Gannett Fleming | Wetlands/Natural Resources Mapping | B.S. Geography | 6 |
| Jock Alfieri, PE<br>Vice President | HNTB | Engineering | B.S. Civil Engineering | 39 |
| Eric Gogola, PE<br>Project Engineer | HNTB | Engineering | B.S. Civil Engineering | 15 |
| Lori Cole, AICP<br>Vice President | JMT | NEPA compliance (ESS3) | B.S. Geography<br>M.A. Environmental Planning/Geography | 28 |
| Robert Nuss, PE, PTOE<br>Practice Leader | KCI | Highway Design and Traffic Analysis | M.S. Civil Engineering | 29 |
| Lino A. Magnelli, PE<br>Senior Project Manager | NTM Engineering | Hydrology and Hydraulics | B.S. Civil Engineering Technology | 25 |
| Kevin Kozain, PE, CPESC<br>Senior Project Manager | NTM Engineering | Stormwater | B.S. Civil Engineering Technology | 23 |
| Emily Bernzott Emm, PE<br>Senior Engineer | NTM Engineering | Hydrology and Hydraulics | B.S. Civil Engineering<br>M. S. Civil Engineering | 11 |
| Michael Stanilla<br>Principal Investigator – Archaeologist | ASC Group | Archaeological Resources | B.A. Anthropology<br>M.A. American Studies | 31 |
| Benjamin Harvey<br>Principal Investigator – Architectural Historian | ASC Group | Historic Properties | B.A. History | 14 |
| Laura Ricketts<br>Principal Investigator – Architectural Historian | Markosky | Historic Properties | M.A. Art History | 27 |
| Kyle Brubaker<br>Senior Environmental Specialist, TD<br>Environmental Task Leader | Navarro & Wright | Hazardous Materials | B.S. Environmental Science | 14 |

| Name and Title | Organization | EA Role | Education | Years |
|---|---|---|---|---|
| Nathaniel Weinstock<br>Air Quality and Acoustical Group Leader, Senior Air Quality and Acoustical Scientist | Navarro & Wright | Noise and Air Quality Analysis | B.S. Public Service | 23 |
| Robert C. Kolmansberger<br>Director of Environmental Services, Senior Air Quality and Acoustical Scientist | Navarro & Wright | Noise and Air Quality Analysis QA/QC | B.A. Geography and Environmental Planning | 31 |

HARRISBURG
I-83 CAPITAL BELTWAY
SR 0083, SECTION 094
DAUPHIN COUNTY, PA

# Appendix G
## TECHNICAL SUPPORT DOCUMENTS

# Technical Support Documents

## Chapter 1 Introduction

- *I-83 Corridor Master Plan* (December 2003)
- *I-83 East Shore Section 3 Traffic Alternative Analysis Report* (December 2018)
- *Greater Harrisburg Area Susquehanna River Bridges Master Plan Summary* (September 2020)
- *Evaluation of Purpose and Need, SR 0083 South Bridge, Dauphin County Memorandum* (July 2020)
- *Alternative Funding: Planning and Environmental Linkages Study* (September 2021)
- *Conceptual Point of Access Study for I-83 Lemoyne Interchange Ramp Modifications* (June 2023)
- *South Bridge Logical Termini and Independent Utility Memorandum* (March 2022)

## Chapter 2 Alternatives

- *Alternative Analysis for I-83 John Harris Memorial Bridge Replacement* (September 2020; revised March 2022)
- *I-83 South Bridge, Technical Memo for the Dismissal of Rehabilitation Alternative* (February 2021)
- *South Bridge Design Plans* (December 2021); see Appendix A
- *Technical Memo for the dismissal of Pedestrian/Bike Accommodations on the I-83 South Bridge* (October 2023)

## Chapter 3 Affected Environment and Environmental Consequences

### Section 3.1 Introduction

- None

### Section 3.2 Natural Resources

- *Wetland Identification & Delineation Report SR 0083 Section 079* (Revised September 2018)
- *Wetland Identification and Delineation Report, S.R. 0083-094 John Harris Memorial (South) Bridge* (January 2021)
- *Interstate 83 South Bridge over Susquehanna River Hydrologic and Hydraulic Memo* (March 2022)

- *Wetlands and Waterways Identification and Delineation Addendum for S.R. 0083 South Bridge* (April 2022)
- *I-83 South Bridge PNDI Receipt, PNDI-718369 Final 5* (May 2023)

## Section 3.3 Socioeconomics

- *South Bridge Environmental Justice Analysis* (August 2023)

## Section 3.4 Visual

- None

## Section 3.5 Air Quality

- *State Route 0083, Section 079 Air Quality Analysis Technical Report* (May 2019)
- *PM Project Level Air Quality Conformity Determination Level 3 Screening Support Memo* (April 2021)
- *Air Quality Analysis Technical Report* (October 2021)

## Section 3.6 Noise

- *Final Design Noise Report – SR 0083, Section 079* (December 2020)
- *SR 0083-094 Preliminary Engineering Noise Analysis Report* (April 2022)

## Section 3.7 Hazardous Waste

- *Phase I Environmental Site Assessment: S.R. 0083, Section 079, Volumes 1–3* (July 2019)
- *Phase I Environmental Site Assessment: S.R. 0083, Section 094 John Harris Memorial (South) Bridge Project* (March 2021)
- *Phase II/III Environmental Site Assessment Report: S.R. 0083, Section 079* (April 2021)

## Section 3.8 Cultural Resources

- *Determination of Effect Report: Interstate 83, Section 079 Widening and Reconstruction* (February 2019)
- *Archaeological Testing Status Update for Areas A, B, and C, I-83 Reconstruction East Shore, Section 3 Project, City of Harrisburg, Swatara Township, and Paxtang Borough Dauphin County, Pennsylvania* (August 2020)
- *Phase IB Archaeological Survey Report, I-83 Reconstruction East Shore, Section 079 Project (MPMS# 97828), City of Harrisburg, Swatara Township, and Paxtang Borough, Dauphin County, Pennsylvania. ER #: 2016-8479-043* (October 2020).
- *S.R. 0083, Section 094, John Harris Memorial (South) Bridge Replacement, Harrisburg City, Dauphin County and Lemoyne Borough, Cumberland County (MPMS 113754; ER No. 2020-8301-043), Reconnaissance Survey* (December 2020)

- *Phase IB Archaeological Survey Report, I-83 Reconstruction East Shore, Section 3 Project (MPMS# 97828), City of Harrisburg, Swatara Township, and Paxtang Borough Dauphin County, Pennsylvania* (February 2021)
- *S.R. 0083-094 John Harris Memorial (South) Bridge, Lemoyne Borough, Cumberland County: Negative Survey Report, Final* (April 2021)
- *S.R. 0083-094 John Harris Memorial (South) Bridge Project, Lemoyne and New Cumberland Boroughs, Cumberland County and Harrisburg City, Dauphin County, Pennsylvania: Determination of Effects Report* (June 2021)
- *PennDOT Section 106 Effects Finding Forms – PATH* (March 2019, April 2021, August 2021)
- *I-83 South Bridge PATH Posting* (March 2022)
- *I-83 South Bridge PATH Project Overview Report* (accessed September 2023)

## Section 3.9 Energy

- None

## Section 3.10 Construction

- None

## Section 3.11 Section 4(f)

- Determination of Section 4(f) De Minimis Use Section 2002 No Adverse Use for Greenbelt Trail (April 2019), with Capital Area Greenbelt Trees Summary Report and Letter to CAGA (September 2020); see Appendix D

## Section 3.12 Cumulative

- None

## Section 3.13 Environmental Justice

- *Alternative Funding: Planning and Environmental Linkages Study* (September 2021)
- *South Bridge Environmental Justice Analysis* (August 2023)

# Chapter 4

- Dauphin SR 0083-094 – Public Meeting Summary for February 19 to March 29, 2021
- Dauphin SR 0083-094 - Public Meeting Summary for October 25 to November 24, 2021

HARRISBURG
I-83 CAPITAL BELTWAY
SR 0083, SECTION 094
DAUPHIN COUNTY, PA

# Appendix H
## REFERENCES

# Important Links

- Pennsylvania Department of Transportation's (PennDOT) I-83 South Bridge Project: https://www.penndot.gov/RegionalOffices/district-8/ConstructionsProjectsAndRoadwork/DauphinCty/Pages/I-83-South-Bridge-Project.aspx
- I-83 Beltway Projects website: http://i-83beltway.com/projects/
- *I-83 Corridor Master Plan*: https://www.i-83beltway.com/projects/i-83-master-plan.php
- *Alternative Funding: Planning and Environmental Linkages Study*: https://www.penndot.gov/about-us/funding/Documents/PennDOT-Pathways_PEL-Study.pdf
- *Greater Harrisburg Area Susquehanna River Bridges Master Plan*: http://www.hbgriverbridges.com/
- *Imagine West Shore Joint Comprehensive Plan*: https://www.lemoynepa.com/community-development-parks-recreation-committee/pages/2009-imagine-west-shore
- Major Bridge Public Private Partnership (MBP3) Initiative: https://www.penndot.gov/ProjectAndPrograms/p3forpa/Pages/Major-Bridges.aspx
- *Harrisburg Area Transportation Study 2023-26 TIP*: https://www.tcrpc-pa.org/hats-traffic-improvement-program
- Clean Air Act (42 United States Code Part 7401 et seq.): https://www.epa.gov/clean-air-act-overview/clean-air-act-text
- Executive Order 12898, Federal Actions to Address Environmental Justice in Minority and Low-Income Populations (February 11, 1994): https://www.archives.gov/files/federal-register/executive-orders/pdf/12898.pdf
- Pennsylvania Transportation and Heritage (PATH) web pages: I-83 South Bridge Project: https://path.penndot.gov/ProjectDetails.aspx?ProjectID=58554; East Shore Section 3 Project: https://path.penndot.gov/ProjectDetails.aspx?ProjectID=48037

# References

ACHP (Advisory Council on Historic Preservation). 2005. Exemption Regarding Historic Preservation Review Process for Effects to the Interstate Highway System. Federal Register 70(46), March 10, 2005. Available online at: https://www.achp.gov/sites/default/files/exemptions/2017-01/final_interstate_exemption_notice.pdf

ASC Group, Inc. 2021. *S.R. 0083-094 John Harris Memorial (South) Bridge, Lemoyne Borough, Cumberland County: Negative Survey Report, Final*. MPMS# 113754, ER# 2020-8301-043. Prepared for PennDOT District 8-0. April 2021.

———. 2021. S.R. 0083-094 John Harris Memorial (South) Bridge Project, Lemoyne and New Cumberland Boroughs, Cumberland County and Harrisburg City, Dauphin County, Pennsylvania: Determination of Effects Report. E.R. # 2020-8301-043/2021PR02808. Prepared for PennDOT District 8-0 and Gannett Fleming, Inc. June 2021.

City of Harrisburg. 2020. *Draft City of Harrisburg 2020 Comprehensive Plan*. Available online at: https://harrisburgpa.gov/comprehensive-plan/.

Commonwealth of Pennsylvania, Governor's Office. 2021. Pennsylvania EO 2021-07, Environmental Justice. October 28, 2021. Available online at: https://www.oa.pa.gov/Policies/eo/Documents/2021-07.pdf

Conowingo prescription, correspondence with USFWS dated April 21, 2021.

Cowardin, Lewis M., Virginia Carter, Francis C. Golet, and Edward T. LaRoe. 1979. *Classification of Wetlands and Deepwater Habitats of the United States*. Prepared for U.S. Department of the Interior, Fish and Wildlife Service, Office of Biological Services. Washington, D.C.

Cumberland County. No Date. Web Mapping. Available online at: https://www.ccpa.net/2295/Web-Mapping

———. 2020. Property Mapper. Available online at: https://gis.ccpa.net/propertymapper/

Dauphin County. 2020. Geographic Information Systems (GIS). Available online at: https://www.dauphincounty.gov/government/support-services/information-technology/gis

*Federal Register*. 2011. Title 23 – Highways, Chapter 1 – Federal Highway Administration, Department of Transportation, Subchapter G – Engineering and Traffic Operations, Park 650 – Bridges, Structures, and Hydraulics. April 2011.

FHWA (Federal Highway Administration). 2012. *FHWA Actions to Address Environmental Justice in Minority Populations and Low-Income Populations*. FHWA Order 6640.23A. June 2012.

———. 2016. *Updated Interim Guidance on Mobile Source Air Toxic Analysis in NEPA Documents*. October 18, 2016. Available online at: https://www.fhwa.dot.gov/ENVIRonment/air_quality/air_toxics/policy_and_guidance/msat/

———. 2022. Traffic Noise Model Version 2.5. Available online at: https://www.fhwa.dot.gov/environment/noise/traffic_noise_model/tnm_v25/

Gannett Fleming, Inc. 2021. *Wetland Identification and Delineation Report, S.R. 0083-094 John Harris Memorial (South) Bridge, Cumberland and Dauphin Counties, Pennsylvania.* MPMS #113754e. Prepared for PennDOT. January 2021.

———. 2022. *Wetlands and Waterways Identification and Delineation Addendum for S.R. 0083 South Bridge*. Prepared for PennDOT District 8-0. April 2022.

Harvey, Benjamin. 2020. *S.R. 0083, Section 094, John Harris Memorial (South) Bridge Replacement, Harrisburg City, Dauphin County and Lemoyne Borough, Cumberland County (MPMS 113754; ER No. 2020-8301-043), Reconnaissance Survey.* Prepared by ASC Group, Inc. Prepared for PennDOT Engineering District 8-0. December 14, 2020.

HDR. 2023. *South Bridge Environmental Justice Analysis*. August 2023.

JMT (Johnson, Mirmiran & Thompson). 2018. *Wetland Identification & Delineation Report SR 0083 Section 079. Interstate 83 Reconstruction (Eisenhower Interchange to South Bridge), City of Harrisburg and Swatara Township, Dauphin County, Pennsylvania.* JMT Project #: 15-0716-002. Submitted to PennDOT District 8-0. Submitted February 27, 2018; revised September 4, 2018.

———. 2019. *Determination of Effect Report: Interstate 83, Section 079 Widening and Reconstruction*. ER# 2016-8479-043, MPMS# 97828. Prepared for PennDOT. February 2019.

———. 2020. *Final Design Noise Report – SR 0083, Section 079 (Interstate 83) Widening and Reconstruction Project, Dauphin County, PA, From S. 29th Street to Susquehanna River*. Prepared for PennDOT District 8-0. December 2020.

———. 2019. *Draft Preliminary Technical Noise Report: SR 0083, Section 079 (Interstate 83) Widening and Reconstruction Project, Dauphin County, PA, from S. 29the Street to Susquehanna River.* Prepared for PennDOT District 8-0. March 2019.

KCI. 2020. *Greater Harrisburg Area Susquehanna River Bridges Master Plan.* Prepared by KCI Technologies, Inc. with Benesch and Toole Design. Prepared for PennDOT. September 2020.

———. 2023. *Conceptual Point of Access Study for I-83 Lemoyne Interchange Ramp Modifications*. June 2023.

Lemoyne Borough. 2009. *Imagine West Shore Joint Comprehensive Plan*. Available online at: https://www.lemoynepa.com/community-development-parks-recreation-committee/pages/2009-imagine-west-shore

Lotus Environmental Consulting. 2020. Memorandum: *Archaeological Testing Status Update for Areas A, B, and C, I-83 Reconstruction East Shore, Section 3 Project, City of Harrisburg, Swatara Township, and Paxtang Borough Dauphin County, Pennsylvania ER #: 2016-8479-043*. Prepared for PennDOT District 8-0. August 5, 2020.

———. 2020. *Phase IB Archaeological Survey Report, I-83 Reconstruction East Shore, Section 079 Project (MPMS# 97828), City of Harrisburg, Swatara Township, and Paxtang Borough, Dauphin County, Pennsylvania. ER #: 2016-8479-043*. Prepared for PennDOT District 8-0. October 14, 2020.

———. 2021. *Phase IB Archaeological Survey Report, I-83 Reconstruction East Shore, Section 3 Project (MPMS# 97828), City of Harrisburg, Swatara Township, and Paxtang Borough Dauphin County, Pennsylvania, ER #: 2016-8479-043,* February 23, 2021.

McCormick Taylor. 2003. *I-83 Corridor Master Plan.* December 2003. Prepared by McCormick Taylor in association with Greenhorne & O'Mara, HNTB Corporation, Skelly & Loy, Community Planning Consultants, Advanced Technology Solutions, Applied Geoscience & Engineering, and BAE Systems ADR. Prepared for U.S. Department of Transportation, FHWA, and PennDOT. Available online at: https://www.i-83beltway.com/projects/i-83-master-plan.php.

Michael Baker International. 2017. *Phase I PennDOT Extreme Weather Vulnerability Study, Study Report.* Prepared for PennDOT. April 2017. Available online at: http://s3.amazonaws.com/tmp-map/climate/doc/StudyReport-PaVulnerabilityStudy-ver040317.pdf

Navarro & Wright Consulting Engineers, Inc. 2019. *Phase I Environmental Site Assessment Report: S.R. 0083, Section 079 Transportation Project City of Harrisburg and Swatara Township Dauphin County, Pennsylvania*. Volumes 1–3. Submitted to HNTB Corporation. July 2019.

———. 2021. *Air Quality Analysis Technical Report Interstate 83 John Harris Memorial (South) Bridge S.R. 0083, Section 094, Dauphin County, Pennsylvania. N&W Project # 2008TD204*. Submitted to Gannett Fleming, Inc. Prepared for PennDOT District 8-0. October 2021.

———. 2021. *Phase I Environmental Site Assessment Report S.R. 0083, Section 094, John Harris Memorial (South) Bridge Project, Lemoyne Borough, Cumberland County, Pennsylvania* (March 2021)

———. 2021. *Phase II/III Environmental Site Assessment Report: S.R. 0083, Section 079, Transportation Project, City of Harrisburg and Swatara Township, Dauphin County, Pennsylvania*. April 2021.

———. 2022. *I-83, Section 094 Preliminary Engineering Noise Analysis Report Interstate 83 John Harris Memorial (South) Bridge S.R. 0083, Section 094, Dauphin and Cumberland Counties, PA*. N&W Project No: 2008TD204. Submitted to Gannett Fleming, Inc. Prepared for PennDOT District 8-0. April 2022.

NTM (Newell Tereska & MacKay). 2022. *SR 0083-094 Interstate 83 South Bridge over Susquehanna River, City of Harrisburg, Dauphin County, Pennsylvania – Preliminary Hydrologic and Hydraulic Memo*. Prepared for PennDOT District 8-0. March 2022.

NPS (National Park Service). 2020. *Guidelines for Evaluating and Registering Archaeological Properties*. National Register Bulletin No. 36. https://www.nps.gov/subjects/nationalregister/upload/NRB36-Complete.pdf

PA Department of Agriculture (Pennsylvania Department of Agriculture). 2021. *Order of Quarantine and Treatment: Spotted Lanternfly*. March 2021. http://www.pacodeandbulletin.gov/Display/pabull?file=/secure/pabulletin/data/vol51/51-11/376.html&search=1&searchunitkeywords=spotted,lanternfly.

———. 2022. Spotted Lanternfly Quarantine. Available online at: https://www.agriculture.pa.gov/Plants_Land_Water/PlantIndustry/Entomology/spotted_lanternfly/quarantine/Pages/default.aspx

PennDOT (Pennsylvania Department of Transportation). No Date. District 8 Construction Projects and Roadwork, Dauphin City. Available online at: https://www.penndot.gov/RegionalOffices/district-8/ConstructionsProjectsAndRoadwork/DauphinCty/Pages/img-1021/south-bridge-diversion-map.jpg

———. No Date. *Homogenous Report for State Road Crashes in Years 2012 to 2016*.

———. No Date. *Analysis of Transportation Needs for the I-83 Master Plan*.

———. 2005. *Pennsylvania Department of Transportation Community Impact Assessment Handbook*. PennDOT Publication 217. Available online at: http://www.dot.state.pa.us/public/pubsforms/Publications/PUB%20217.pdf

———. 2008. *Indirect and Cumulative Effects (ICE) Desk Reference*. PennDOT Publication 640. March 2008. Available online at: https://www.dot.state.pa.us/public/PubsForms/Publications/PUB%20640.pdf

———. 2014. *Invasive Species Best Management Practices*. PennDOT Publication 756. Available online at: https://www.dot.state.pa.us/public/pubsforms/Publications/PUB%20756.pdf.

———. 2015. *Wetland Resources Handbook*. PennDOT Publication 325. Available online at: http://www.dot.state.pa.us/public/PubsForms/Publications/PUB%20325.pdf

———. 2016. *Project Level Environmental Justice Guidance*. PennDOT Publication 746. Available online at: http://www.dot.state.pa.us/public/pubsforms/Publications/Pub%20746.pdf

———. 2017. *Project-Level Air Quality Handbook.* PennDOT Publication 321. October 2017. Available online at: https://www.dot.state.pa.us/public/pubsforms/Publications/PUB 321.pdf

———. 2018. *Paxton Creek Master Plan*. February 2018. Available online at: https://www.paxtoncreek.org/wp-content/uploads/02.21.18_Paxton_Creek_Master_Plan.pdf.

———. 2018. *Environmental Permitting Handbook*). PennDOT and PADEP Joint Agency Guidance, Publication 783. Available online at: https://www.dot.state.pa.us/public/pubsforms/Publications/PUB%20783.pdf

———. 2018. *Pennsylvania Department of Transportation Section 4(f)/Section 2002 Handbook*. PennDOT Publication 349. January 2018, update of August 2014 edition. Available online at: http://www.dot.state.pa.us/public/PubsForms/Publications/PUB%20349.pdf

———. 2018. *I-83 East Shore Section 3 Traffic Alternative Analysis Report*. December 2018.

———. 2019. *I-83 Section 3 Reconstruction Alternatives Analysis Report*.

———. 2019. *Project Level Highway Traffic Noise Handbook.* PennDOT Publication 24. May 2019. Available online at: https://www.dot.state.pa.us/public/pubsforms/Publications/PUB%2024.pdf

———. 2019. *Waste Site Evaluation Procedures Handbook*: *The Transportation Project Development Process.* PennDOT Publication No. 281. May 2019. Available online at: http://www.dot.state.pa.us/public/PubsForms/Publications/PUB%20281.pdf

———. 2019. *Design Manual Part 1B (Post-TIP NEPA Procedures)*. PennDOT Publication 10B. November 2015 Edition, July 2019 Change No. 1. Available online at: https://www.dot.state.pa.us/public/PubsForms/Publications/PUB%2010/Pub%2010B/July%202019%20Change%20No%201.pdf

———. 2020. *Design Manual Part 1X (Appendices to Design Manuals 1, 1A, 1B, and 1C)*. PennDOT Publication 10X. November 2015 edition, May 2020 Change No. 3. Available online at: https://www.dot.state.pa.us/public/PubsForms/Publications/PUB%2010/Pub%2010X/May%202020%20Change%20No.%203.pdf

———. 2020. *Needs Study Handbook*. PennDOT Publication 319. Available online at: http://www.dot.state.pa.us/public/PubsForms/Publications/PUB%20319.pdf

———. 2020. *Project-Level Air Quality Handbook*. PennDOT Publication 321. Available online at: http://www.dot.state.pa.us/public/PubsForms/Publications/PUB%20321.pdf

———. 2020. T*hreatened and Endangered Species Desk Reference*. PennDOT Publication 546. January 2020 update of December 2013 edition. Available online at: http://www.dot.state.pa.us/public/pubsforms/Publications/PUB%20546.pdf

———. 2021. *Alternative Funding: Planning and Environmental Linkages Study*. Final, September 2021. Available online at: https://www.penndot.gov/about-us/funding/Documents/PennDOT-Pathways_PEL-Study.pdf

———. 2021. *Evaluation of Purpose and Need, SR 0083 South Bridge, Dauphin County Memorandum*. July 2020; finalized January 2021.

———. 2021. *I-83 South Bridge, Technical Memo for the Dismissal of Rehabilitation Alternative*. February 2021.

———. 2021. Pennsylvania Transportation and Heritage (PATH) website for MPMS 113754, I-83 South Bridge Replacement, Dauphin County, SR 83 Section 094. Available online at: https://path.penndot.gov/ProjectDetails.aspx?ProjectID=%2058554

———. 2021. Pennsylvania Transportation and Heritage (PATH) website for MPMS 97828, I-83 East Shore Section 3, Dauphin County, SR 83 Section 079. Available online at: https://path.penndot.gov/ProjectDetails.aspx?ProjectID=48037

———. 2021. *Project Level Public Involvement Handbook*. PennDOT Publication 295. May 2021 update of November 2011 edition. Available online at: https://www.dot.state.pa.us/public/PubsForms/Publications/PUB%20295.pdf

———. 2021. *The Transportation Project Development Process: Cultural Resources Handbook*. PennDOT Publication 689. Available online at: http://www.dot.state.pa.us/public/PubsForms/Publications/PUB%20689.pdf

———. 2022. PennDOT Traffic Volume Maps. Available online at: https://www.penndot.gov/ProjectAndPrograms/Planning/Maps/Pages/Traffic-Volume.aspx

———. 2022. *South Bridge Logical Termini and Independent Utility Memorandum*. March 2022.

———. 2022. *Alternative Analysis for I-83 John Harris Memorial Bridge Replacement*. September 2020, revised March 2022.

———. 2022. I-83 Current Projects. Available online at: http://i-83beltway.com/projects/

———. 2022. *SR 0083 Section 078 Dauphin County Eisenhower Interchange Reconstruction Project (East Shore Section 2) EA*. Available online at: https://www.i-83beltway.com/projects/east-shore-section-3.php

———. 2023. *Technical Memo for the dismissal of Pedestrian/Bike Accommodations on the I-83 South Bridge.* October 2023.

PGC (Pennsylvania Game Commission). 2001. *Pennsylvania Important Mammal Areas Project.* Available online at: https://www.pgc.pa.gov/Wildlife/HabitatManagement/Pages/ImportantMammalAreas.aspx.

PGC and PFBC (Pennsylvania Game Commission and Pennsylvania Fish and Boat Commission). 2015. *Pennsylvania Wildlife Action Plan*. October 2015.

PNHP (Pennsylvania Natural Heritage Program). 2021. Pennsylvania Natural Diversity Inventory. Available online at: https://conservationexplorer.dcnr.pa.gov/content/environmental-review

Specialty Engineering, Inc. 2020. *2020 Routine Bridge Safety Inspection Report*. Bristol, Pennsylvania.

TCRPC (Tri-County Regional Planning Commission). 2022. *Harrisburg Area Transportation Study 2023-26 TIP.* Available online at: https://www.tcrpc-pa.org/hats-traffic-improvement-program

TRB (Transportation Research Board). 2008. How Much Does Traffic Congestion Increase Fuel Consumption and Emissions? Applying Fuel Consumption Model to NGSIM Trajectory Data. Available online at: https://trid.trb.org/view/848721

———. 2016. *Highway Capacity Manual: A Guide for Multimodal Mobility Analysis*. Sixth Edition.

U.S. Census Bureau. 2021. 2015–2019 ACS 5-Year Estimates.

USACE (U.S. Army Corps of Engineers). 1987. *Corps of Engineers Wetland Delineation Manual*. January 1987. Available online at: https://usace.contentdm.oclc.org/digital/collection/p266001coll1/id/4530 .

———. 1993. *New England District, Highway Methodology Workbook Supplement: Wetland Function and Values, A Descriptive Approach*.

———. 2012. *Regional Supplement to the Corps of Engineers Wetland Delineation Manual: Eastern Mountains and Piedmont Region*. Version 2.0, April 2012. Available online at: https://usace.contentdm.oclc.org/utils/getfile/collection/p266001coll1/id/7607.

USDOT (U.S. Department of Transportation). 1986. Design Standards for Highways in National Flood Insurance Program Mapped Floodplains – Floodplains – Hydrology & Floodplains – Hydraulics – Bridges & Structures – Federal Highway Administration. Available online at: https://www.fhwa.dot.gov/engineering/hydraulics/policymemo/860402.cfm.

USEPA (U.S. Environmental Protection Agency). 2021. EPA and Army Take Action to Provide Certainty for the Definition of WOTUS. Available online at: https://www.epa.gov/newsreleases/epa-and-army-take-action-provide-certainty-definition-wotus.

———. 2021. Sources of Greenhouse Gas Emissions. https://www.epa.gov/ghgemissions/sources-greenhouse-gas-emissions, accessed October 19, 2021.

———. 2021. Regulations to Reduce Mobile Source Pollution. Available online at: https://www.epa.gov/mobile-source-pollution/regulations-reduce-mobile-source-pollution

HARRISBURG
I-83 CAPITAL BELTWAY
SR 0083, SECTION 094
DAUPHIN COUNTY, PA

# Appendix I
## ACRONYMS AND ABBREVIATIONS

# Acronyms and Abbreviations

| | |
|---|---|
| AADT | annual average daily traffic |
| ACHP | Advisory Council on Historic Preservation |
| ACS | American Community Survey |
| ACM | Agency Coordination Meeting |
| ADA | Americans with Disabilities Act |
| ADTT | average daily truck traffic |
| AOC | Areas of Concern |
| APE | Area of Potential Effect |
| AST | aboveground storage tank |
| ATON | Aids to Navigation |
| bgs | below ground surface |
| BIL | Bipartisan Infrastructure Law |
| BMP | best management practice |
| CAGA | Capital Area Greenbelt Association |
| CAT | Capital Area Transit |
| CFR | Code of Federal Regulations |
| CO | carbon monoxide |
| CS | Consolidated Statute |
| CWA | Clean Water Act |
| dB | decibel |
| dBA | A-weighted decibel |
| DCNR | Department of Conservation and Natural Resources |
| DCPD | Dauphin County Parks Department |
| DE | Development Entity |
| EA | Environmental Assessment |
| EC | Environmental Covenant |
| EIS | environmental impact statement |
| EJAB | Environmental Justice Advisory Board |

| | |
|---|---|
| EMS | emergency medical services |
| EO | Executive Order |
| ERU | Equivalent Residential Units |
| ESA | Endangered Species Act |
| ESA | Environmental Site Assessment |
| ESS3 | East Shore Section 3 |
| FEMA | Federal Emergency Management Agency |
| FHWA | Federal Highway Administration |
| $ft^3$ | cubic foot/feet |
| GHG | greenhouse gas |
| GIS | Geographic Information Systems |
| Greenbelt | Capital Area Greenbelt |
| H&H | hydrologic and hydraulic |
| HRSF | Historic Resource Survey Form |
| HSM | Highway Safety Manual |
| I-76 | Interstate 76 |
| I-81 | Interstate 81 |
| I-83 | Interstate 83 |
| I-83 South Bridge Project | State Route (SR) 0083 Section 094 Dauphin County, Interstate 83 (I-83) South Bridge Replacement Project |
| ICG | Interagency Consultation Group |
| IIJA | Infrastructure Investment and Jobs Act |
| LEP | Limited English Proficiency |
| LOD | Limits of Disturbance |
| LOS | Level of Service |
| MBP3 | Major Bridge Public Private Partnership |
| mph | miles per hour |
| MPMS | Multi-modal Project Management System |
| MPO | Metropolitan Planning Organization |
| MSAT | Mobile Source Air Toxics |

| | |
|---|---|
| NAAQS | National Ambient Air Quality Standards |
| NAC | noise abatement criteria |
| NEPA | National Environmental Policy Act |
| NFIP | National Flood Insurance Program |
| NHPA | National Historic Preservation Act |
| NOAA | National Oceanic and Atmospheric Administration |
| NOx | nitrogen oxide |
| NPDES | National Pollutant Discharge Elimination System |
| NRHP | National Register of Historic Places |
| NSA | Noise Study Area |
| OEJ | Office of Environmental Justice |
| P3 | Public Private Partnership |
| PA | Pennsylvania Route |
| PA | Pennsylvania |
| PADEP | Pennsylvania Department of Environmental Protection |
| PADHS | Pennsylvania Department of Health and Human Services |
| PAH | polycyclic aromatic hydrocarbons |
| PATH | Pennsylvania Transportation and Heritage |
| PCB | polychlorinated biphenyls |
| PEL | Planning and Environmental Linkages |
| PennDOT | Pennsylvania Department of Transportation |
| PFBC | Pennsylvania Fish and Boat Commission |
| PGC | Pennsylvania Game Commission |
| PHMC | Pennsylvania Historical and Museum Commission |
| PM | particulate matter ($PM_{2.5}$ and $PM_{10}$) |
| PNDI | Pennsylvania Natural Diversity Inventory |
| PNHP | Pennsylvania Natural Heritage Program |
| PPC | Preparedness, Prevention, and Contingency |
| PS | Pennsylvania Statute |
| PUC | Public Utility Commission |

| | |
|---|---|
| RFFA | Reasonably Foreseeable Future Action |
| RPO | Rural Planning Organization |
| SAMBA | Susquehanna Area Mountain Bike Association |
| SAV | submerged aquatic vegetation |
| SHPO | State Historic Preservation Office |
| SIP | State Implementation Plan |
| SNAP | Supplemental Nutrition Assistance Program |
| South Bridge | John Harris Memorial Bridge |
| SR | State Route |
| TIP | Transportation Improvement Program |
| TNM | Traffic Noise Model |
| UDL | Undeveloped Lands |
| UPMC | University of Pittsburgh Medical Center |
| US | U.S. Route |
| U.S.C. | U.S. Code |
| USACE | U.S. Army Corps of Engineers |
| USCG | U.S. Coast Guard |
| USDOT | U.S. Department of Transportation |
| USEPA | U.S. Environmental Protection Agency |
| USFWS | U.S. Fish and Wildlife Service |
| UST | underground storage tank |
| VMT | vehicle miles traveled |
| WOTUS | Waters of the United States |
| WS | Waste Site |