DISTRICT	COUNTY	ROUTE	SECTION	SHEET
8-0	LANCASTER	2015	012	5 OF 6
COLERAIN TOWNSHIP				

REV NO	REVISION	DATE	BY	APPD

PLOTTED: 7-AUG-2026

FILE NAME:G:\DGN\56xx\5617006\5617-006_SR_2015_Sec_012_Pumping_Station_Road_Bridge_WorkSet\dgn\HWY\Construction\5_5617-006_Plan.dgn

LEGEND

- PARCEL ID - TAKE (POTENTIAL)
- PARCEL ID - NO TAKE
- PROPOSED ROADWAY RECONSTRUCTION
- PROPOSED SHOULDER RECONSTRUCTION
- PROPOSED STRUCTURE
- WATER/STREAM

BM-B SQUARE CUT AT NE CORNER OF INLET STA 65+94 +/- LT. ELEV 439.85'

PI. STA. 58+50.49
Δ = 39°54'56" LT
D = 20°42'19"
T = 100.49'
L = 192.78'
R = 276.72'
E = 17.68'
SE = EXISTING

STOP MILLING AND RESURFACING
START FULL DEPTH PAVEMENT
STA 61+02.00

STOP FULL DEPTH PAVEMENT
STA 61+42.57

START FULL DEPTH PAVEMENT
STA 62+06.96

STOP FULL DEPTH PAVEMENT
START MILLING AND RESURFACING
STA 62+70.00

PI. STA. 62+48.33
Δ = 67°36'05" RT
D = 13°57'54"
T = 274.67'
L = 484.07'
R = 410.28'
E = 83.45'
SE = 8.00%

START WORK
STA 60+45.00
SEG 0040 OFFSET 1211
SR 2015 SEC 012
START MILLING AND RESURFACING

STOP WORK
STA 63+78.00
SEG 0040 OFFSET 1551
SR 2015 SEC 012
STOP MILLING AND RESURFACING

LIMIT OF WORK
STA. 64+28
SEG 0040 OFFSET 1601
SR 2015 SEC 012
COLERAIN TOWNSHIP
LANCASTER COUNTY

LIMIT OF WORK
STA. 59+95.00
SEG 0040 OFFSET 1161
SR 2015 SEC 012
COLERAIN TOWNSHIP
LANCASTER COUNTY

PERMANENT IMPACT
ATTENUATING DEVICE, TYPE II,
TEST LEVEL 2, TANGENT (MASH)

PERMANENT IMPACT
ATTENUATING DEVICE, TYPE II,
TEST LEVEL 2, TANGENT (MASH)

TEMPORARY CONSTRUCTION EASEMENT

POTENTIAL RIGHT-OF-WAY LINE

LEGAL LIMIT OF SLOPE EASEMENT

LEGAL CHANNEL EASEMENT

LEGAL RIGHT-OF-WAY

TERMINAL SECTION SINGLE

WOOD SPLIT RAIL

MOVE AND RESET MAILBOX

TIE TO EXISTING GUIDE RAIL

ATTCH 46106S20491 CG 57

ATTCH 46127S20464 CG 59

ATTCH 46127S20476 CG 58

ATTCH 46148S20457 CTCO CG 60

PT STA. 59+84.76 AHD BK. =
PT STA. 59+42.78 AHD

PT STA. 64+57.74 BK. =
PT STA. 64+82.36 AHD

1.1 MILES TO BARTVILLE ROAD (T-363)

0.1 MILES TO FAIRVIEW ROAD (T-365)

PUMPING STATION ROAD

SR 2015

N63°38'24"W

N03°57'41"E

SIGN

SBCPP

BM-B

PIPE BOTTOM DAMAGED INV AT GROUND

BOWERY RUN

WEST BRANCH OCTORARO CREEK

STONE DRIVE

WOODS

(1) MICHAEL L. BROWN AND ASHLEY M. BROWN

(2) COUNTY OF LANCASTER

(4) DROGARIS FAMILY LIMITED PARTNERSHIP

EXISTING STRUCTURE DATA

STRUCTURE TYPE:	*ROLLED STEEL MULTI-BEAM*
NO SPANS:	*ONE (1)*
SPAN (C/C BRGS):	*15'-6" ± SKEWED*
NORMAL CLEAR SPAN:	*30'-8¼" ±*
ROADWAY WIDTH:	*26'-3" ± CURB-TO-CURB*
DECK WIDTH:	*28'-8" ± OUT-TO-OUT*
VERTICAL UNDERCLEARANCE:	*7'-11" ± UPSTREAM FACE*
HYDRAULIC OPENING:	*241 S.F. ± (MIN.)*
SKEW ANGLE	*45° ± ABUTMENTS TO BRIDGE SPAN*
YEAR BUILT	*1941*

PROPOSED STRUCTURE DATA

STRUCTURE TYPE:	PRESTRESSED CONCRETE BULB-TEES
NO SPANS:	ONE (1)
SPAN (C/C BRGS):	62'-0"
NORMAL CLEAR SPAN:	42'-4¼"
ROADWAY WIDTH:	27-9" CURB-TO-CURB
DECK WIDTH:	29'9" ± OUT-TO-OUT
VERTICAL UNDERCLEARANCE:	8'-1" ± UPSTREAM FACE
HYDRAULIC OPENING:	316 S.F. ±
SKEW ANGLE	45° ABUTMENTS TO BRIDGE SPAN

SR 2015 SECTION 012
CONCEPTUAL PLAN

ENGINEERS & CONSULTANTS MACKIN

pennsylvania
DEPARTMENT OF TRANSPORTATION

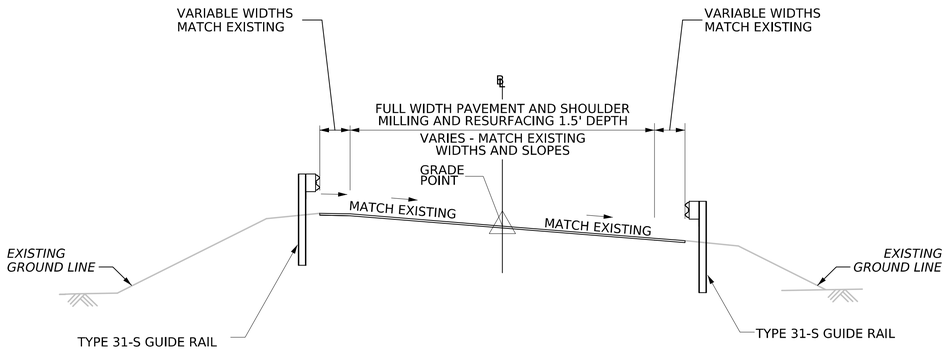

SR 2015 (PUMPING STATION RD)
TYPICAL SECTION
(MILLING AND RESURFACING)

NOT TO SCALE

STA 60+45.00 TO STA 61+02.00
STA 62+70.00 TO STA 63+78.00

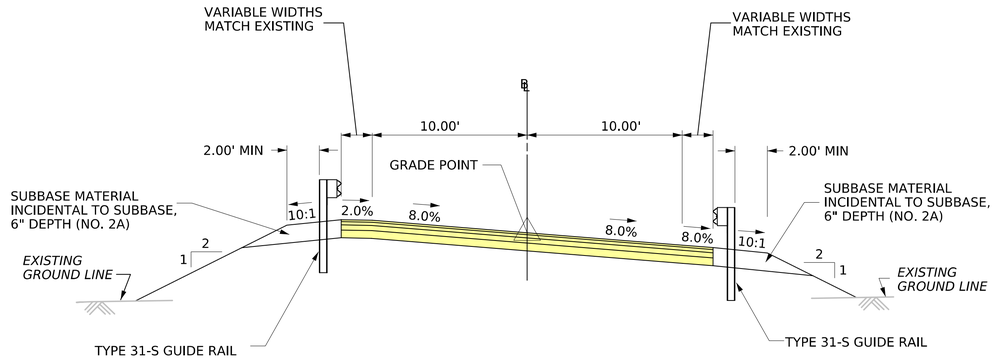

SR 2015 (PUMPING STATION RD)
TYPICAL SECTION
(FULL DEPTH RECONSTRUCTION)

NOT TO SCALE

STA 61+02.00 TO STA 61+42.57
STA 62+06.96 TO STA 62+70.00

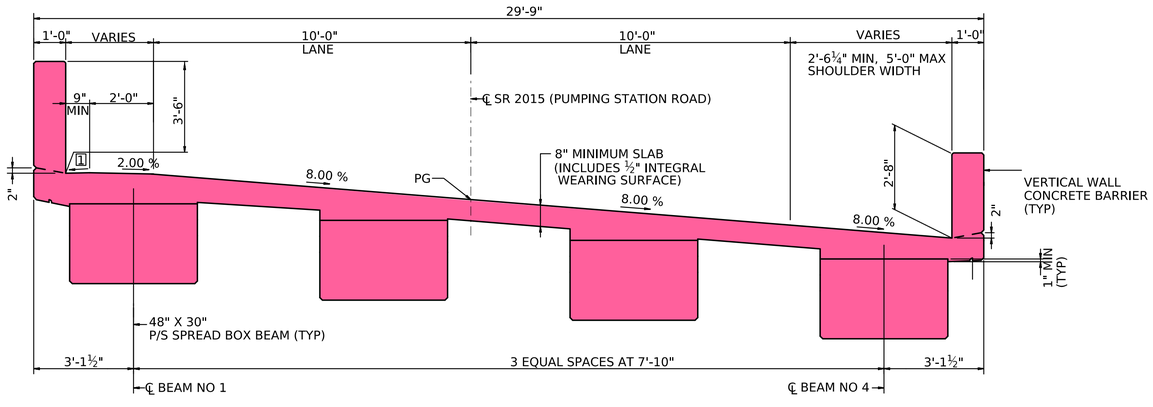

TYPICAL SECTION
LOOKING AHEAD STATIONS

12 0 12 INCHES

1 SLOPE AT -2.00% TO THE BARRIER

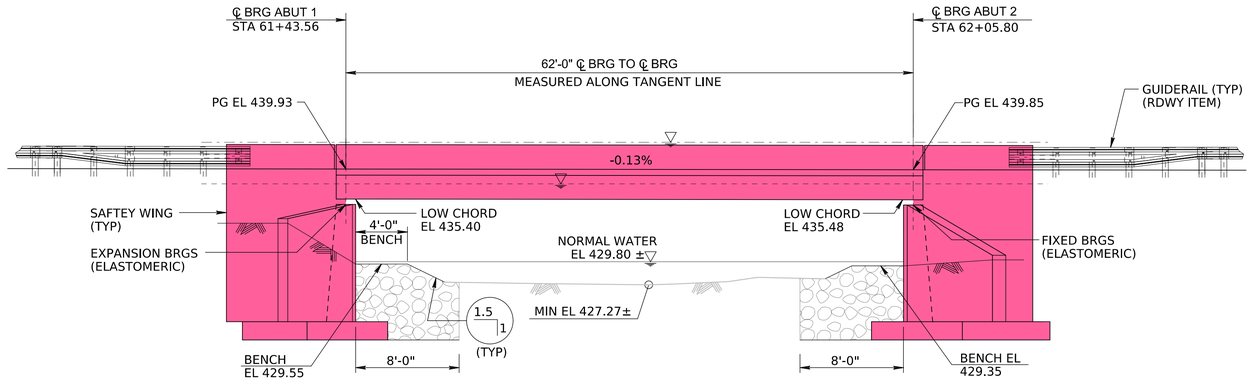

ELEVATION

2 0 4 8 FEET

LEGEND

- PARCEL ID - TAKE (POTENTIAL)
- PARCEL ID - NO TAKE
- PROPOSED ROADWAY RECONSTRUCTION
- PROPOSED SHOULDER RECONSTRUCTION
- PROPOSED STRUCTURE
- WATER/STREAM

SR 2015 SECTION 012
TYPICAL SECTION

ENGINEERS & CONSULTANTS MACKIN

pennsylvania
DEPARTMENT OF TRANSPORTATION