DISTRICT	COUNTY	ROUTE	SECTION	SHEET
8-0	LANCASTER	2007	015	5 OF 6
LITTLE BRITAIN TOWNSHIP AND COLERAIN TOWNSHIP				

REV NO	REVISION	DATE	BY	APPD

PLOTTED: 29-JUL-2026

FILE NAME:G:\DGN\56xx\5617014\5617-014_SR_2007_Sec_015_Spruce_Grove_Road_Bridge_WorkSet\dgn\HWY\Construction\5_5617-014_Plan.dgn

BM:
RRS SET IN
EP CT CO 48
STA 49+20.5 +/-
EL 284.87

CHESTER MUNICIPAL AUTHORITY

PI STA 1+01.76
Δ = 29°35'44" LT
D = 32°44'26"
T = 46.23'
L = 90.39'
R = 175.00'
E = 6.00'

PT STA 1+45.92

STOP WORK
STOP MILLING
AND RESURFACING
STA 1+00.00

START WORK
START MILLING
AND RESURFACING
STA 0+20.00

PC STA 0+55.53

POTENTIAL
RIGHT-OF-WAY
LINE FOR
TOWNSHIP ROAD

STA 44+45.57 SPRUCE
GROVE ROAD (SR 2007) =
STA 0+00.00 BLUE GILL
ROAD (T-322)

START WORK
STA 44+00.00
SEG 0060 OFFSET 1814
SR 2015 SEC 015
START MILLING
AND RESURFACING

LEGAL RIGHT-OF-WAY LINE OF TOWNSHIP ROAD

N54°01'29"W

LITTLE BRITAIN TOWNSHIP
COLERAIN TOWNSHIP

IMPACT ATTENUATOR

EXISTING CABLE RAIL

T-322
BLUE GILL ROAD

STOP
BLUE GILL RD

WOODS

N24°25'45"W

POTENTIAL RIGHT-OF-WAY
LINE FOR TOWNSHIP ROAD
TEMPORARY CONSTRUCTION
EASEMENT

STEEL
HAND
RAIL

VERT 3' PIPE
SCUPPER (TYP.)

BRIDGE
WEIGHT LIMIT
10 TONS

TEMPORARY
CONSTRUCTION
EASEMENT

TIE TO EXISTING
GUIDE RAIL

STOP WORK
STA 47+25.00
SEC 0070 OFFSET 0234
SR 2015 SEC 015
STOP MILLING
AND RESURFACING

LIMIT OF WORK
STA. 47+75.00
SEG 0070 OFFSET 0284
SR 2015 SEC 015
COLERAIN TOWNSHIP
LANCASTER COUNTY

OCTORARO LAKE

YIELD TO
ONCOMING
TRAFFIC

1.494 MILES TO
KIRKWOOD PIKE

RIP-RAP

LEGAL RIGHT-OF-WAY LINE

SR 2007
SPRUCE GROVE ROAD

N29°24'13"E

0.812 MILES TO
ASHVILLE ROAD

SPRUCE GROVE ROAD
SR 2007

N08°32'56"E

LEGAL RIGHT-OF-WAY LINE

BURIED-IN-BACKSLOPE
TERMINAL SINGLE RAIL

YEILD TO
ONCOMING
TRAFFIC

CT CO G-50 GC V

CT CO 50

BM PDH

BRIDGE 3-15-19
WEIGHT LIMIT 10 TONS
SR 2077 60

FRONTIER G 49

TIE TO EXISTING
GUIDE RAIL

STOP FULL DEPTH PAVEMENT
START MILLING AND RESURFACING
STA 46+53.00

PT STA 44+61.56

STOP MILLING AND RESURFACING
START FULL DEPTH PAVEMENT
STA 44+65.00

PC STA 42+97.77

LIMIT OF WORK
STA. 43+00.00
SEG 0060 OFFSET 1714
SR 2015 SEC 015
LITTLE BRITAIN TOWNSHIP
LANCASTER COUNTY

PI STA 43+80.58
Δ = 20°51'17" RT
D = 12°43'57"
T = 82.81'
L = 163.79'
R = 450.00'
E = 7.56'

COLERAIN TOWNSHIP
LITTLE BRITAIN TOWNSHIP

LEGEND

- PARCEL ID - TAKE (POTENTIAL)
- PROPOSED ROADWAY RECONSTRUCTION
- PROPOSED STRUCTURE
- WATER/STREAM

EXISTING STRUCTURE DATA

STRUCTURE TYPE:	*CONTINUOUS ROLLED STEEL BEAMS*
NO SPANS:	*THREE (3)*
SUPERSTRUCTURE DEPTH:	*8¼" DECK + 23⅞" BEAMS = 2'8⅛"*
SPAN (C/C BRGS):	*39'-10", 52'1", 39'10"*
LOW CHORD ELEVATION:	*284.03'*
MIN. LAKEBED ELEVATION:	*268.15'*
VERTICAL UNDERCLEARANCE:	*15'-10½" ± DOWNSTREAM FACIA BEAM*
ROADWAY WIDTH:	*17'0" ± BETWEEN GUIDE RAILS*
DECK WIDTH:	*19'-0" ± OUT-TO-OUT*
SKEW ANGLE	*ABUTMENTS ALIGNED 90° ± TO FLOW*
YEAR BUILT	*1951*

PROPOSED STRUCTURE DATA

STRUCTURE TYPE:	CONTINUOUS ROLLED STEEL BEAMS
NO SPANS:	THREE (3)
SUPERSTRUCTURE DEPTH:	8" DECK + 23¾" BEAMS = 2'8¼"
SPAN (C/C BRGS):	39'-10", 52'1", 39'10"
LOW CHORD ELEVATION:	284.13'
MIN. LAKEBED ELEVATION:	268.15'
VERTICAL UNDERCLEARANCE:	15'-11¾" ± UPSTREAM/DOWNSTREAM FACIA BEAMS
ROADWAY WIDTH:	17'0" ± BETWEEN GUIDE CURBS
DECK WIDTH:	19'-0" ± OUT-TO-OUT
SKEW ANGLE	ABUTMENTS ALIGNED 90° ± TO FLOW

SR 2007 SECTION 015
CONCEPTUAL PLAN

ENGINEERS & CONSULTANTS MACKIN

pennsylvania
DEPARTMENT OF TRANSPORTATION

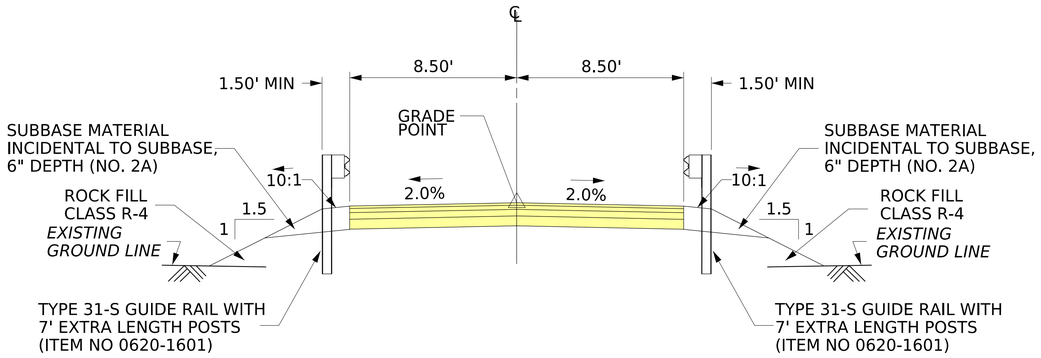

TYPICAL SECTION

NOT TO SCALE
STA 44+65.00 TO STA 44+91.65
STA 46+28.32 TO STA 46+53.00

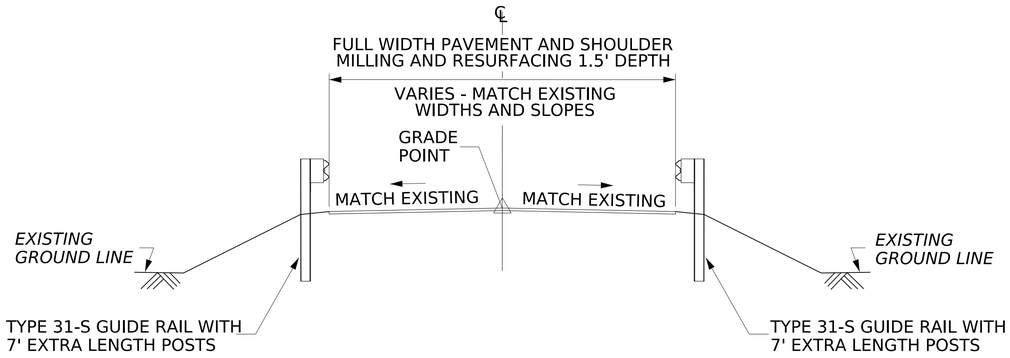

SR 2007 (SPRUCE GROVE RD) TYPICAL SECTION

NOT TO SCALE
STA 44+00.00 TO STA 44+65.00
STA 46+53.00 TO STA 47+25.00

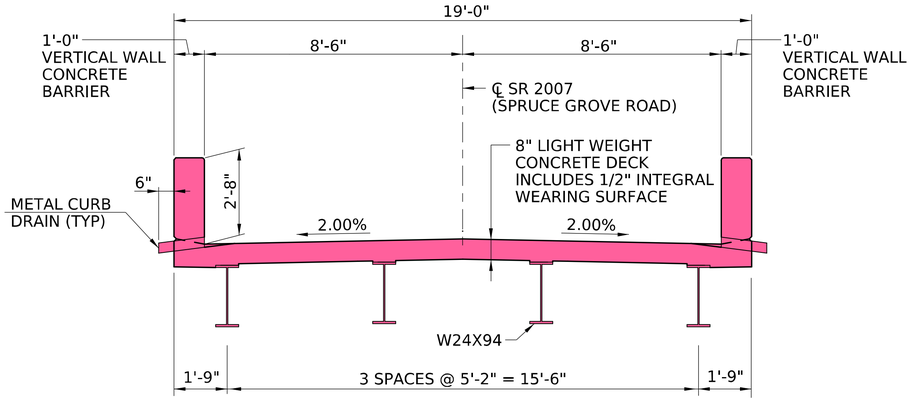

TYPICAL SECTION

0 1' 2' 3' 4'

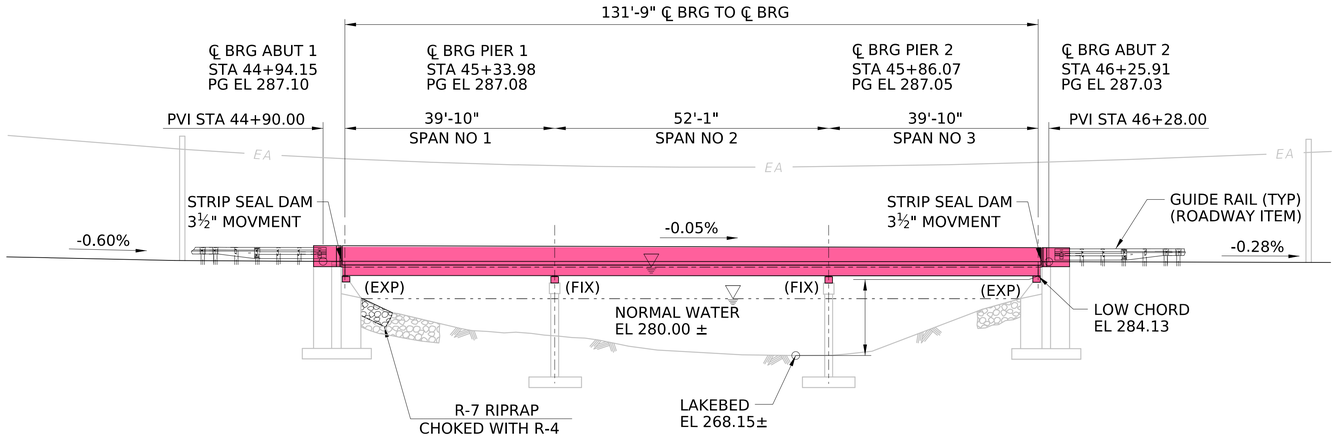

ELEVATION

0 15 30

LEGEND

- PARCEL ID - TAKE (POTENTIAL)
- PROPOSED ROADWAY RECONSTRUCTION
- PROPOSED STRUCTURE
- WATER/STREAM

SR 2007 SECTION 015 TYPICAL SECTION

ENGINEERS & CONSULTANTS MACKIN

pennsylvania DEPARTMENT OF TRANSPORTATION