| DISTRICT | COUNTY | ROUTE | SECTION | SHEET |
|---|---|---|---|---|
| 8-0 | LANCASTER | 2007 | 014 | 5 OF 6 |
| LITTLE BRITAIN TOWNSHIP | | | | |

| REV NO | REVISION | DATE | BY | APPD |
|---|---|---|---|---|
| | | | | |
| | | | | |

PLOTTED: 25-AUG-2026

FILE NAME:G:\DGN\56xx\5617010\5617-010_SR_2007_Sec_014_Lloyd_Road_Bridge_WorkSet\dgn\HWYConstruction\5_5617-010_Plan.dgn

## LEGEND

- PARCEL ID - TAKE (POTENTIAL)
- PARCEL ID - NO TAKE
- PROPOSED ROADWAY RECONSTRUCTION
- PROPOSED STRUCTURE
- WATER/STREAM

*BM-A*
*STA 37+51.4 +/- LT*
*SQUARE CUT ON*
*TOP SW CORNER*
*OF INLET CURB*
*ELEV 328.02'*

*BM-B*
*STA 32+87.7 +/- RT*
*SQUARE CUT ON*
*TOP NW CORNER*
*INLET CURB*
*ELEV 334.86*

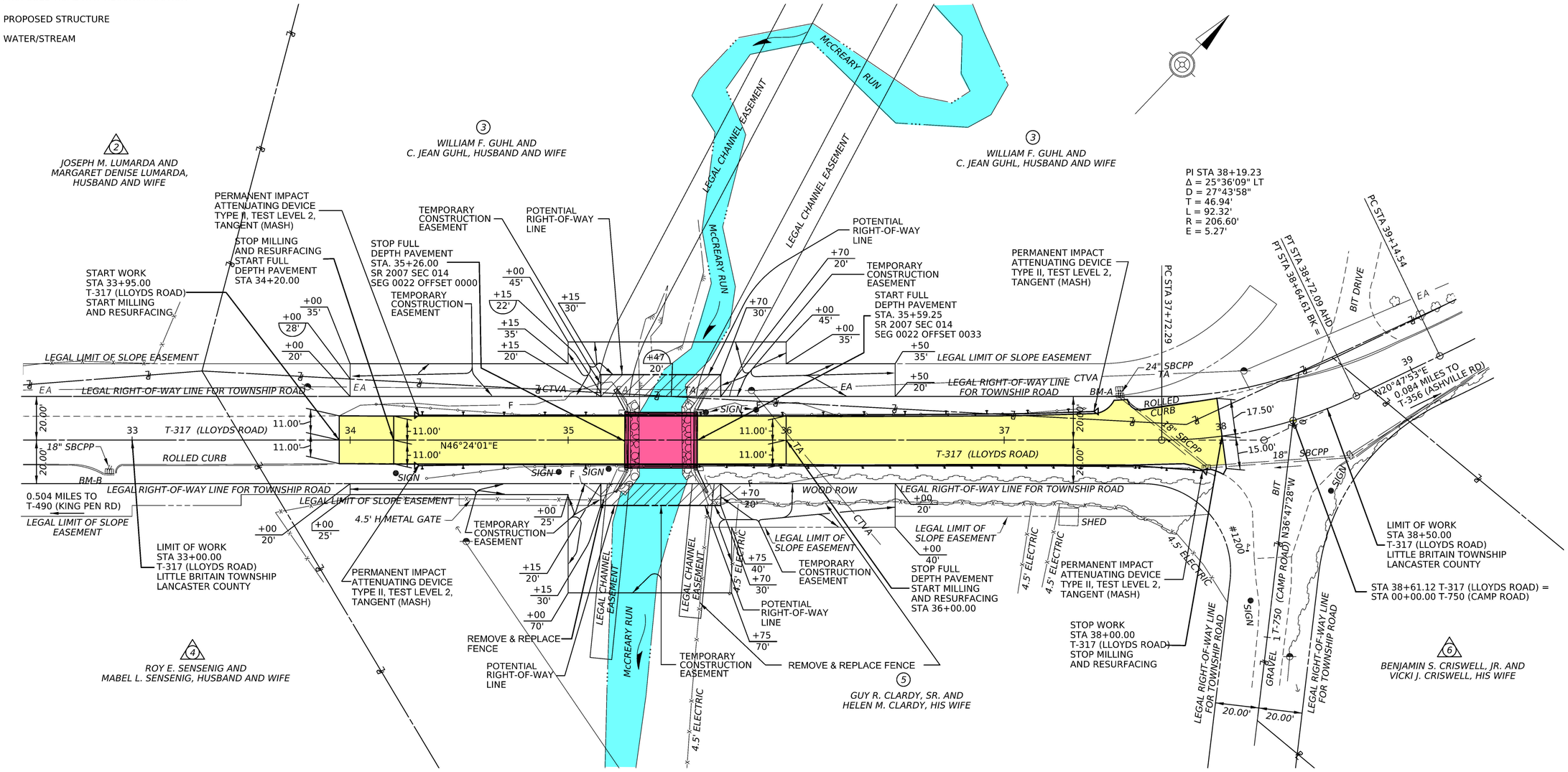


*EXISTING STRUCTURE DATA*

| | |
|---|---|
| *STRUCTURE TYPE:* | *ROLLED STEEL MULTI-BEAMS* |
| *NO SPANS:* | *ONE (1)* |
| *SPAN (C/C BRGS):* | *31'-9" ±* |
| *NORMAL CLEAR SPAN:* | *30'-1¼" ± MAX. (TOP OF ABUTMENT STEM)* |
| *ROADWAY WIDTH:* | *23'-6" ± BETWEEN GUIDE RAILS* |
| *DECK WIDTH:* | *25'-6" ± OUT-TO-OUT* |
| *VERTICAL UNDERCLEARANCE:* | *10'-6¾" ± UPSTREAM FACE* |
| *HYDRAULIC OPENING:* | *296 S.F. ± (MIN.)* |
| *SKEW ANGLE* | *ABUTMENTS SKEWED 0° ± TO IMMEDIATE UPSTREAM CHANNEL* |
| *YEAR BUILT* | *1949* |

PROPOSED STRUCTURE DATA

| | |
|---|---|
| STRUCTURE TYPE: | ROLLED STEEL MULTI-BEAMS |
| NO SPANS: | ONE (1) |
| SPAN (C/C BRGS): | 31'-9" |
| NORMAL CLEAR SPAN: | 30'-1¼" MAX. (TOP OF ABUTMENT STEM) |
| ROADWAY WIDTH: | 22'-6" CURB-TO-CURB |
| DECK WIDTH: | 25'6" ± OUT-TO-OUT |
| VERTICAL UNDERCLEARANCE: | 10'-4¼" ± UPSTREAM FACE |
| HYDRAULIC OPENING: | 289 S.F. ± |
| SKEW ANGLE | ABUTMENTS SKEWED 0° ± TO IMMEDIATE UPSTREAM CHANNEL |

# SR 2007 SECTION 014 CONCEPTUAL PLAN

ENGINEERS & CONSULTANTS MACKIN

pennsylvania DEPARTMENT OF TRANSPORTATION

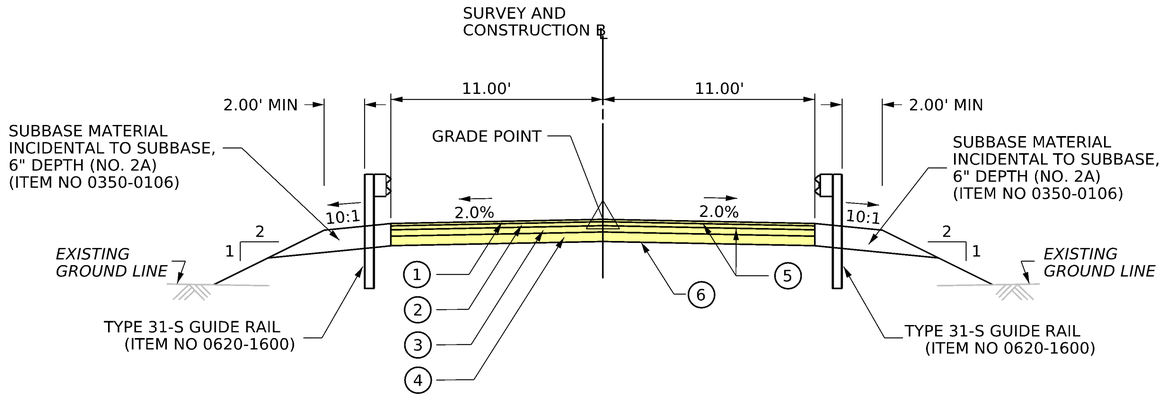


## T-317 (LLOYDS RD.) TYPICAL SECTION (FULL DEPTH RECONSTRUCTION)

NOT TO SCALE

STA 34+20.00 TO STA 35+26.00
STA 35+59.25 TO STA 36+00.00

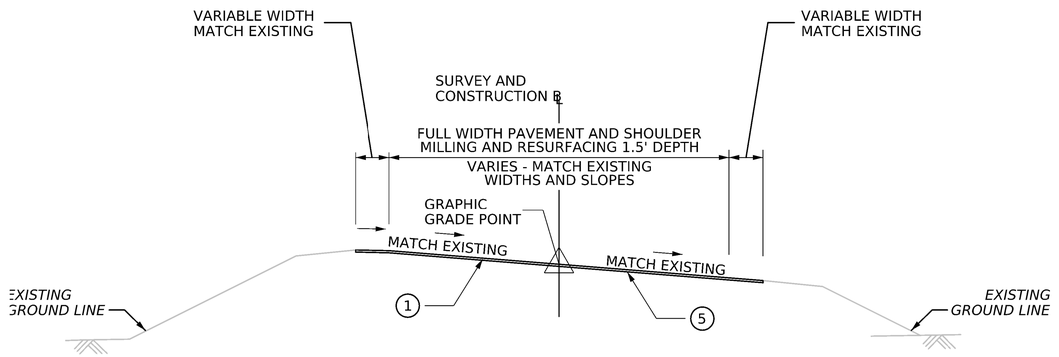


## T-317 (LLOYDS RD.) TYPICAL SECTION (MILLING AND RESURFACING)

NOT TO SCALE

STA 33+95.00 TO STA 34+20.00
STA 36+00.00 TO STA 38+00.00

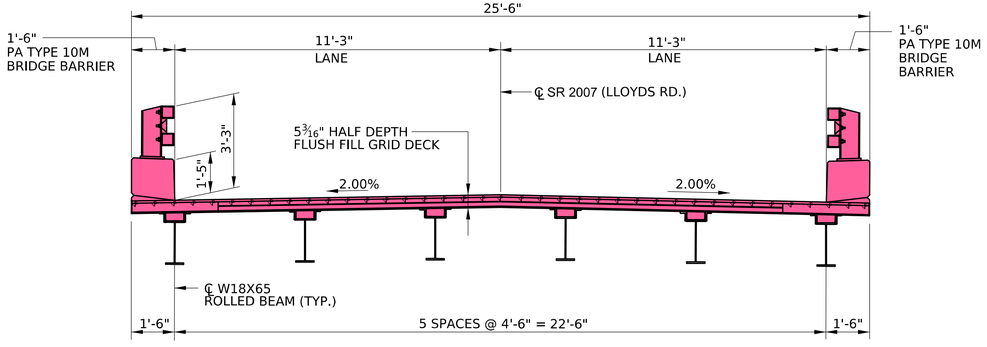


## TYPICAL SECTION

1 0 1 FEET

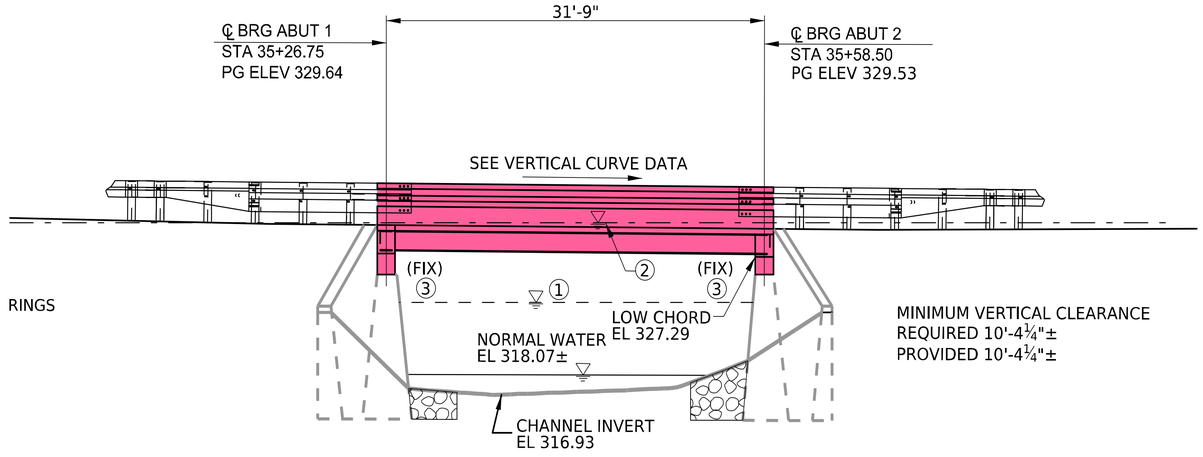


## ELEVATION

4 0 4 FEET

## LEGEND

- PARCEL ID - TAKE (POTENTIAL)
- PARCEL ID - NO TAKE
- PROPOSED ROADWAY RECONSTRUCTION
- PROPOSED STRUCTURE
- WATER/STREAM

# SR 2007 SECTION 014 TYPICAL SECTION

ENGINEERS & CONSULTANTS MACKIN

pennsylvania DEPARTMENT OF TRANSPORTATION