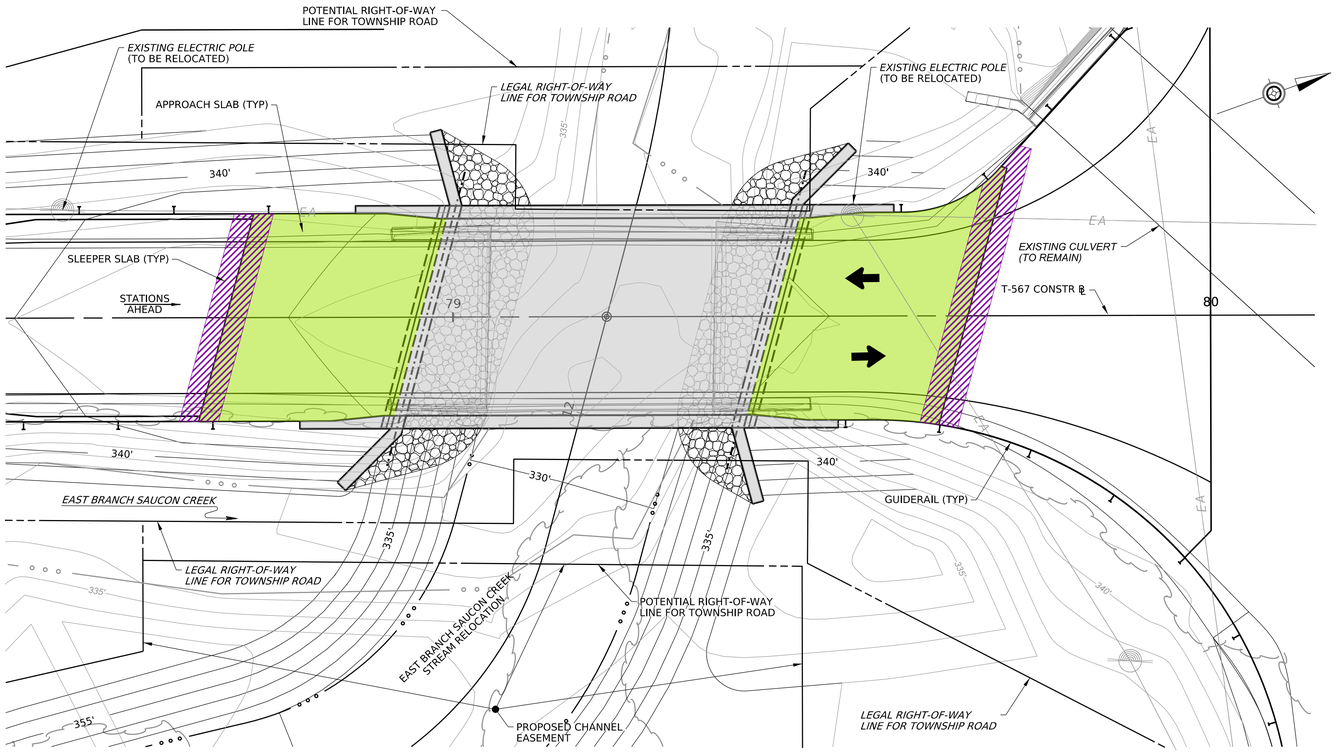

PLAN

NOT TO SCALE

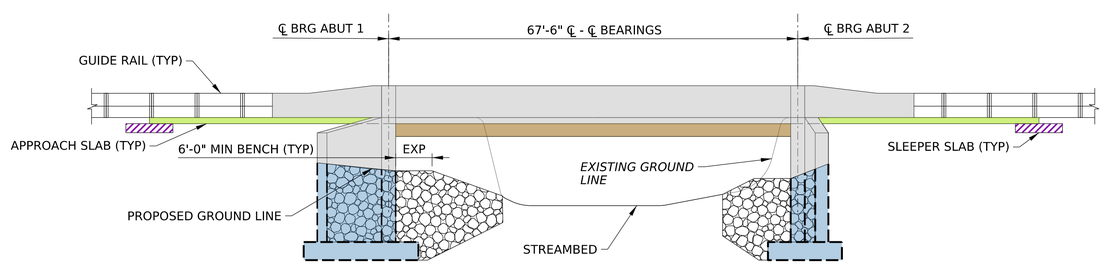

PROPOSED BRIDGE ELEVATION

NOT TO SCALE

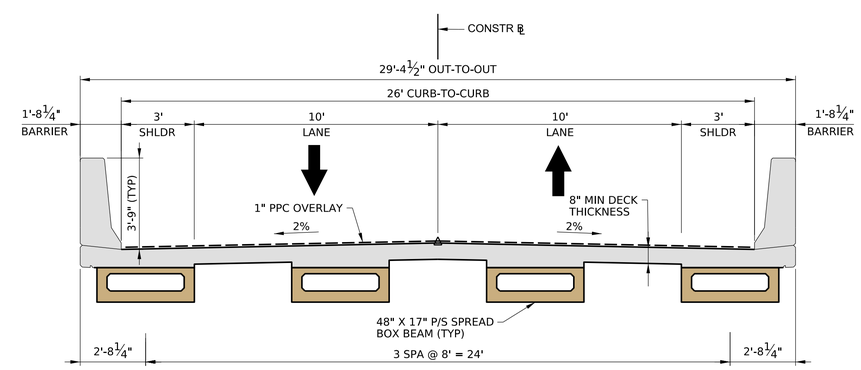

PROPOSED BRIDGE SECTION

NOT TO SCALE

pennsylvania
DEPARTMENT OF TRANSPORTATION

SR 2001, SECTION 01B

LOWER SAUCON ROAD OVER EAST BRANCH SAUCON CREEK
BRIDGE REPLACEMENT
LOWER SAUCON TOWNSHIP, NORTHAMPTON COUNTY
PRELIMINARY

RK&K