OS-299(2-05)

PENNDOT

TRANSMITTAL LETTER

Publication 111M
May 2007 Edition
Change 2

DATE: July 25, 2008

SUBJECT: Publication 111M Traffic Control – Pavement Markings and Signing Standards TC-8600 and TC-8700 Series

INFORMATION AND SPECIAL INSTRUCTIONS:

The attached Standard Drawings shall be used by Department personnel and consultants whenever applicable for the design, details, and installation of traffic control Pavement Markings and Signs. The previous Publication 111M, issued May 2007, and any changes thereto shall be replaced by this new edition.

The following is a summary of the major changes that have been incorporated into this edition.

General:

- Added following standards as part of this publication:
  TC-8717 – Temporary Portable Sign Post, “H” Base and “X” Base

TC-8701S:

- 2 – Added new detail for Extruded Aluminum Stiffeners for use on Flat Sheeting Aluminum Signs

TC-8716:

- Made changes to conform to the MUTCD

TC-8717:

- This is a new standard drawing for a portable sign post for PENNDOT that was approved by FHWA.

CANCEL AND DESTROY THE FOLLOWING:
The following standards are replaced:

Index Sheet

TC-8701S dated May 25, 2007

TC-8716 dated May 25, 2007

REQUEST ADDITIONAL COPIES FROM:

Distribution Services Unit
P.O. Box 2028
Harrisburg, PA 17105

Telephone: (717) 787-6746

APPROVED FOR ISSUANCE BY:

Allen D. Biehler, P.E.
Secretary of Transportation
By:

Daryl R. St. Clair, P.E.
Acting Director, Bureau of Highway Safety and Traffic Engineering

08-299(2-05) PENNDOT	**TRANSMITTAL LETTER**	Publication 111M May 2007 Edition Change 1 DATE: March 18, 2008

SUBJECT: Publication 111M Traffic Control - Pavement Markings and Signing Standards TC-8600 and TC-8700 Series

INFORMATION AND SPECIAL INSTRUCTIONS:

This change involves making corrections to clarify the use of Clearview Font for upper case/lower case font on guide signs and correct a metric dimension for when sign lighting is required for overhead guide signs.

CANCEL AND DESTROY THE FOLLOWING:

THE FOLLOWING STANDARDS ARE REPLACED: TC-8701A and TC-8701D dated May 25, 2007

REQUEST ADDITIONAL COPIES FROM:

Distribution Services Unit
P.O. Box 2028
Harrisburg, PA 17105

Telephone: (717) 787-6746

APPROVED FOR ISSUANCE BY:

Allen D. Biehler, P.E.
Secretary of Transportation
BY:

Daryl St. Clair, P.E.
Acting Director, Bureau of Highway Safety and Traffic Engineering

OS-299(2-05)

PENNDOT

TRANSMITTAL LETTER

Publication 111M

DATE: May 25, 2007

SUBJECT: Publication 111M Traffic Control – Pavement Markings and Signing Standards TC-8600 and TC-8700 Series

INFORMATION AND SPECIAL INSTRUCTIONS:

The attached Standard Drawings shall be used by Department personnel and consultants whenever applicable for the design, details, and installation of traffic control Pavement Markings and Signs. The previous Publication 111M, issued August 1997, and any changes thereto shall be replaced by this new edition.

The following is a summary of the major changes that have been incorporated into this edition.

General:

- Added following standards as part of this publication:
  TC-8600 - Pavement Markings
  TC-8602 - Snowplowable Raised Pavement Markings
  TC-8604 - Delineation

- Standards shown in dual units, metric and English

- Standards developed in conformance with 2001 AASHTO Standard Specifications for Structural Supports for Highway Signs, Luminaries, and Traffic Signals and the 2002 Interim revisions.

TC-8700:

- 8 thru 11 – Added English unit spacing charts for clearview highway fonts 5W & 5WR
- 12 thru 17 – Added English unit spacing charts

TC-8701A:

- 1 of 7 – Note 3 under signing plans revised to indicate if 800’ min. clear tangent sight distance is not available, sign lighting is required.

TC-8701D:

- 4 of 9 – Added new diagrammatic sign standard
- 5 of 9 – Added two new alternate designs for gore signs in restricted lateral clearance areas
- 9 of 9 – Revised color specifications for Turnpike shields

TC-8701E:

- 1 of 2 – Added 6” sections at top & bottom of extruded aluminum channel sign

TC-8701R:

- 1 & 2 – Added “Next Rest Area” supplemental plaque detail

TC-8701S:

- 1 of 3 – Removed medium flanged section detail

TC-8702A:

- 2, 3 & 4 of 8 – Added W18X35 & W18X40 post sizes to post selection charts
- 7 of 8 – Added W18 bracket selection table
  - Deleted W310 bracket selection table
- 8 of 8 – Added W18 to footing selection table
  - Added soil properties note

TC-8702B:

- General – Deleted steel square posts (System B)
- 5 of 9 – Deleted universal spacer detail
- 8 of 9 – Added socket system for concrete installations

TC-8702D:

- 1 of 2 – New anchor detail and parapet attachment method

TC-8702E:

- General – Removed composite post selection tables and erection details
- 1 of 5 – Added “one post” selection table

CANCEL AND DESTROY THE FOLLOWING:

REQUEST ADDITIONAL COPIES FROM:

Distribution Services Unit
P.O. Box 2028
Harrisburg, PA 17105

Telephone: (717) 787-6746

APPROVED FOR ISSUANCE BY:

Allen D. Biehler, P.E.
Secretary of Transportation
By:

M. G. Patel, P.E.
Chief Engineer, Highway Administration

COMMONWEALTH OF PENNSYLVANIA
DEPARTMENT OF TRANSPORTATION

TRAFFIC CONTROL – PAVEMENT MARKINGS AND SIGNING STANDARDS
PUBLICATION 111M
TC–8600 AND TC–8700 SERIES

BUREAU OF HIGHWAY SAFETY AND TRAFFIC ENGINEERING

MAY 2007

INDEX OF TRAFFIC CONTROL - PAVEMENT MARKINGS AND SIGNING STANDARDS

STANDARD DRAWING NO.		DATE	DESCRIPTION
TC-8600	(8 SHEETS)	MAY 25, 2007	PAVEMENT MARKINGS (EXPESSWAY / FREEWAY, CONVENTIONAL, LEGENDS & SYMBOLS)
TC-8602	(4 SHEETS)	MAY 25, 2007	SNOWPLOWABLE RAISED PAVEMENT MARKERS
TC-8604	(4 SHEETS)	MAY 25, 2007	DELINEATION
TC-8700C	(18 SHEETS)	MAY 25, 2007	SPACING CHARTS / DIRECT APPLIED LETTERS, NUMERALS & ARROWS
TC-8701A	(7 SHEETS)	MAR. 18, 2008	ADVANCE SIGNING FOR INTERCHANGES
TC-8701D	(9 SHEETS)	MAR. 18, 2008	SIGN DETAILS / FREEWAY & EXPRESSWAY GUIDE SIGNS
TC-8701E	(2 SHEETS)	MAY 25, 2007	EXTRUDED ALUMINUM CHANNEL SIGNS
TC-8701P	(2 SHEETS)	MAY 25, 2007	FREEWAY & EXPRESSWAY ADVANCE SIGNING FOR PARKING AREAS
TC-8701R	(2 SHEETS)	MAY 25, 2007	FREEWAY & EXPRESSWAY ADVANCE SIGNING FOR REST AREAS
* TC-8701S	(4 SHEETS)	JUL. 18, 2008	FLAT SHEET ALUMINUM SIGNS WITH EXTRUDED ALUMINUM STIFFENERS
TC-8701W	(2 SHEETS)	MAY 25, 2007	FREEWAY & EXPRESSWAY ADVANCE SIGNING FOR WELCOME CENTERS
TC-8702A	(8 SHEETS)	MAY 25, 2007	POST-MOUNTED SIGNS, TYPE A
TC-8702B	(9 SHEETS)	MAY 25, 2007	POST-MOUNTED SIGNS, TYPE B
TC-8702C	(2 SHEETS)	MAY 25, 2007	POST-MOUNTED SIGNS, TYPE C
TC-8702D	(2 SHEETS)	MAY 25, 2007	POST-MOUNTED SIGNS, TYPE D
TC-8702E	(5 SHEETS)	MAY 25, 2007	POST-MOUNTED SIGNS, TYPE E
TC-8710	(1 SHEET)	MAY 25, 2007	DISTANCE MARKERS
TC-8715	(5 SHEETS)	MAY 25, 2007	SIGN LIGHTING
* TC-8716	(1 SHEET)	JUL. 18, 2008	TYPE III BARRICADE
* TC-8717	(1 SHEET)	JUL. 18, 2008	TEMPORARY PORTABLE SIGN POST, "H" BASE AND "X" BASE

PUB. 111M, MAY 2007 EDITION

SEE CHANGE #1 FOR MAR. 18, 2008 STANDARD REVISIONS

* SEE CHANGE #2 FOR JUL. 18, 2008 STANDARD REVISIONS

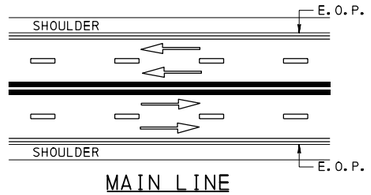

MAIN LINE

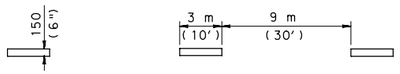

BROKEN LANE LINE

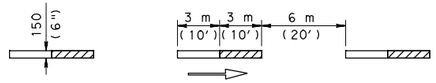

BROKEN LANE LINE WITH BLACK SHADOW LINES
(SEE NOTE 15)

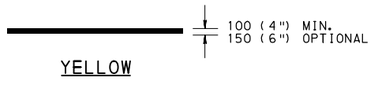

EDGE LINES

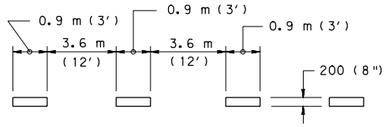

AUXILIARY LANE LINE

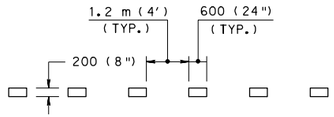

DOTTED EXTENSION LINE
(SEE NOTE 9)

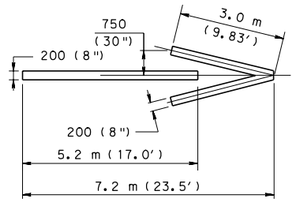

WRONG-WAY ARROW
(SEE NOTE 8)

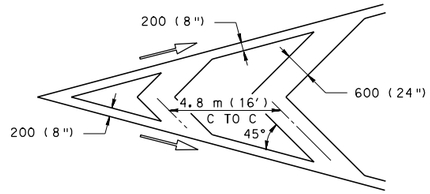

CHEVRON GORE MARKING
(OPTIONAL, SEE NOTE 7)

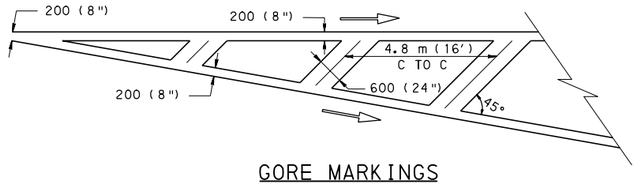

GORE MARKINGS
(OPTIONAL, SEE NOTE 7)

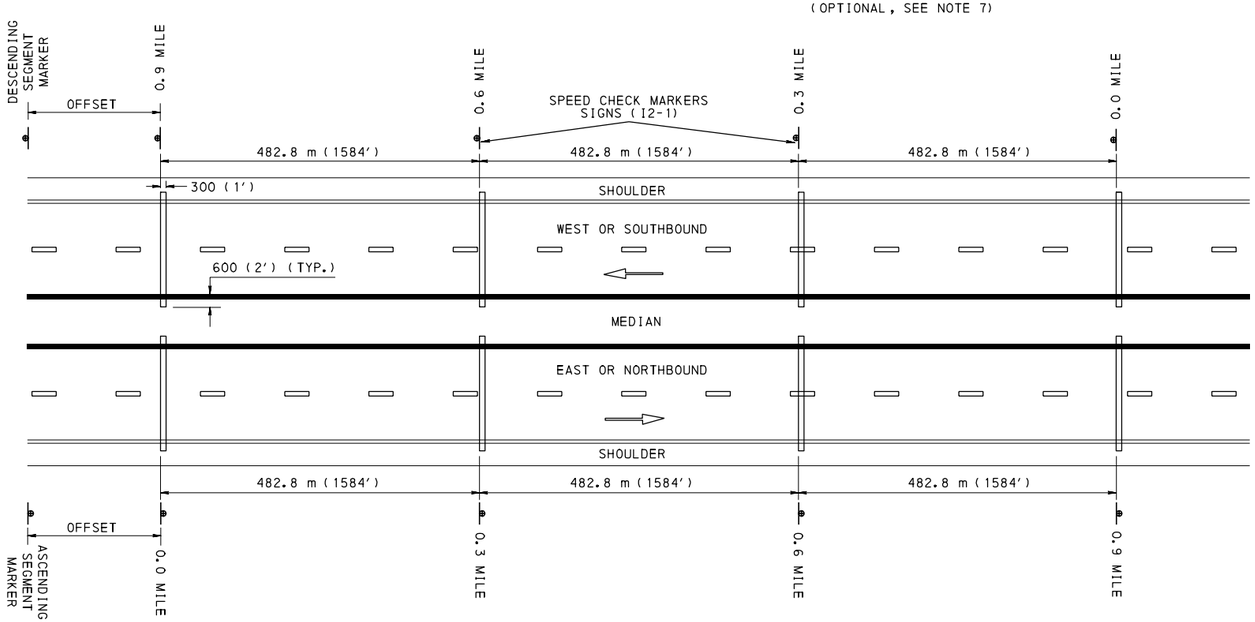

STATE POLICE AERIAL RECONNAISSANCE ENFORCEMENT (S.P.A.R.E.) MARKING DETAIL
(LOCATE ON TANGENT SECTION OF ROADWAY, SEE NOTE 10)

LEGEND

BLACK

WHITE

YELLOW

DIRECTION OF TRAVEL

NOTES:

1. MATERIALS AND WORKMANSHIP IN ACCORDANCE WITH PENNSYLVANIA DEPARTMENT OF TRANSPORTATION'S PUBLICATION 408, UNLESS NOTED OTHERWISE.
2. REFLECTORIZE ALL NON-BLACK PAVEMENT MARKINGS.
3. EDGE LINES SHOULD BE 100 mm (4") MINIMUM WIDE SOLID LINE OF THE COLOR INDICATED AND PLACED 100 mm (4") INSIDE THE EDGE OF THE PAVEMENT SHOULDER.
4. ON EXPRESSWAYS / FREEWAYS MAKE BROKEN LANE LINES 150 mm (6") WIDE AND LOCATE 100 mm (4") TO THE RIGHT OF THE PAVEMENT JOINT OR SEAM.
5. APPLY ALL PAINTED CENTER LINES, LANE LINES AND LEGENDS AT 380 µm (15 MILS) MINIMUM WET THICKNESS.
6. APPLY PAINTED EDGE LINES AT 300 µm (12 MILS) MINIMUM WET THICKNESS.
7. USE CROSSHATCHING AT EXIT GORE AREAS WHEN VISIBILITY OR SIGHT DISTANCE OF THE GORE IS RESTRICTED.
8. PLACE OPTIONAL WRONG-WAY ARROWS IN CENTER OF EACH LANE OF AN EXIT RAMP, 1.5 m (5') FROM STOP BAR OR PAVEMENT EDGE AND ACROSS FROM WRONG-WAY SIGNS.
9. DOTTED EXTENSION LINES ON EXPRESSWAY / FREEWAYS MAY ONLY BE USED TO EXTEND RAMP / MAIN LINE / INTERSECTION EDGE LINES IN ORDER TO PROVIDE GUIDANCE WHERE THE PROPER TRAVEL PATH IS UNCLEAR BECAUSE OF THE HORIZONTAL OR VERTICAL CURVATURE.
10. TYPICAL S.P.A.R.E. ZONE LENGTH IS 1.44 km (0.9 MILE), MINIMUM IS 0.96 km (0.6 MILE).
11. FOR ADDITIONAL DETAILS REFER TO MARKINGS, CHAPTER 3, MUTCD.
12. FOR CONVENTIONAL HIGHWAY PAVEMENT MARKINGS, SEE TC-8600 SHEETS 3 AND 4 OF 8.
13. FOR LEGENDS & SYMBOLS PAVEMENT MARKINGS, SEE TC-8600 SHEETS 6, 7 AND 8 OF 8.
14. FOR LOCATION AND INSTALLATION OF SNOWPLOWABLE RAISED PAVEMENT MARKERS, SEE TC-8602.
15. BLACK SHADOW LINES REQUIRED FOR CONCRETE ROADWAY SURFACES WITH EPOXY MARKINGS ONLY.
16. ALL DIMENSIONS ARE IN MILLIMETERS UNLESS OTHERWISE NOTED. ENGLISH UNITS IN PARENTHESIS ( ).
17. EITHER ALL METRIC OR ALL ENGLISH UNITS MUST BE USED ON PLANS. METRIC AND ENGLISH UNITS SHOWN MAY NOT BE MIXED.

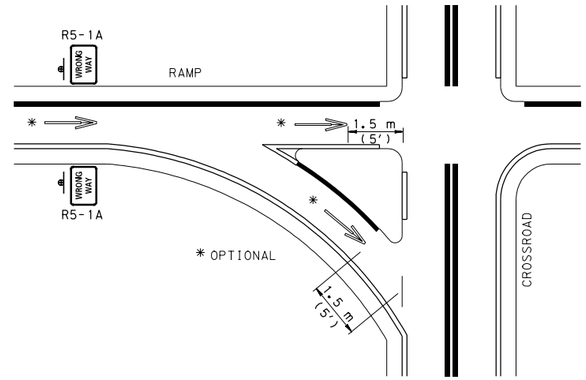

RAMP CROSSROAD TERMINAL MARKINGS WITH WRONG-WAY ARROWS
(SEE MUTCD FIGURE 3B-23 FOR MORE DETAILS)

COMMONWEALTH OF PENNSYLVANIA
DEPARTMENT OF TRANSPORTATION
BUREAU OF HIGHWAY SAFETY AND TRAFFIC ENGINEERING

PAVEMENT MARKINGS

EXPRESSWAY / FREEWAY

RECOMMENDED MAY 25, 2007 Glenn C Rowe CHIEF, TRAFFIC ENGINEERING AND OPERATIONS DIVISION	RECOMMENDED MAY 25, 2007 M. Patel CHIEF HIGHWAY ENGINEER	SHT. 1 OF 8 TC-8600

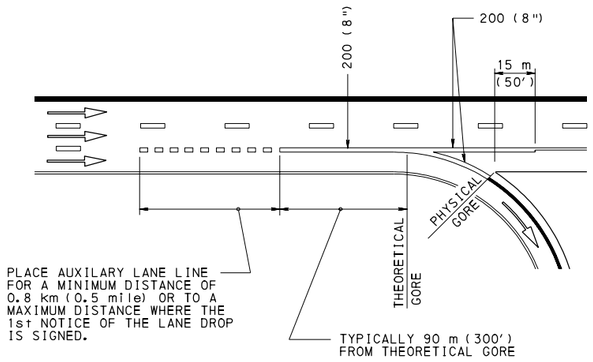

EXIT ONLY LANE DROP

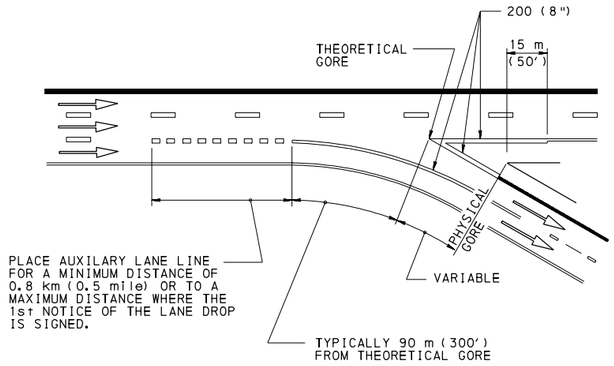

MULTIPLE EXIT LANES

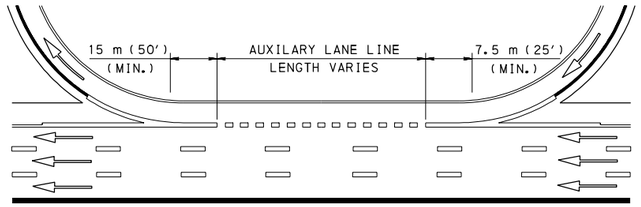

CLOVERLEAF INTERCHANGE

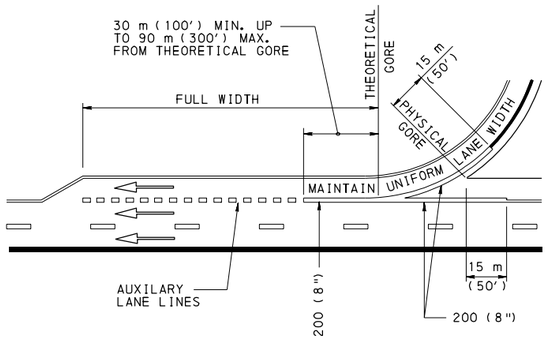

PARALLEL LANE

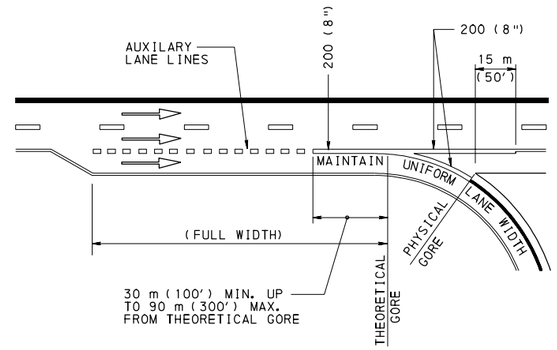

PARALLEL LANE

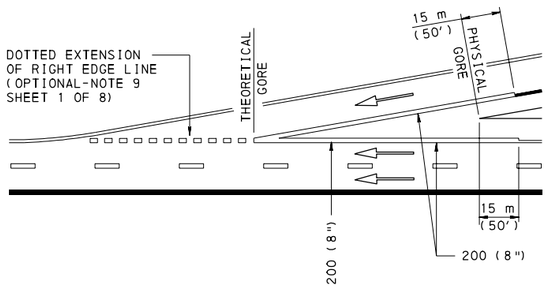

TAPERED LANE

ACCELERATION LANE

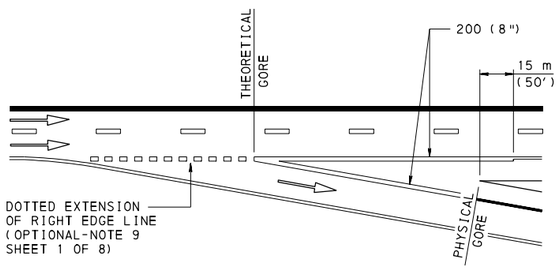

TAPERED LANE

DECELERATION LANE

LEGEND

WHITE

YELLOW

DIRECTION OF TRAVEL

NOTE:

1. ALL DIMENSIONS ARE IN MILLIMETERS UNLESS OTHERWISE NOTED. ENGLISH UNITS IN PARENTHESIS ( ).
2. EITHER ALL METRIC OR ALL ENGLISH UNITS MUST BE USED ON PLANS. METRIC AND ENGLISH UNITS SHOWN MAY NOT BE MIXED.

COMMONWEALTH OF PENNSYLVANIA
DEPARTMENT OF TRANSPORTATION
BUREAU OF HIGHWAY SAFETY AND TRAFFIC ENGINEERING

PAVEMENT MARKINGS

EXPRESSWAY / FREEWAY

RECOMMENDED MAY 25, 2007 Glen C Rowe CHIEF, TRAFFIC ENGINEERING AND OPERATIONS DIVISION	RECOMMENDED MAY 25, 2007 CHIEF HIGHWAY ENGINEER	SHT. 2 OF 8 TC-8600

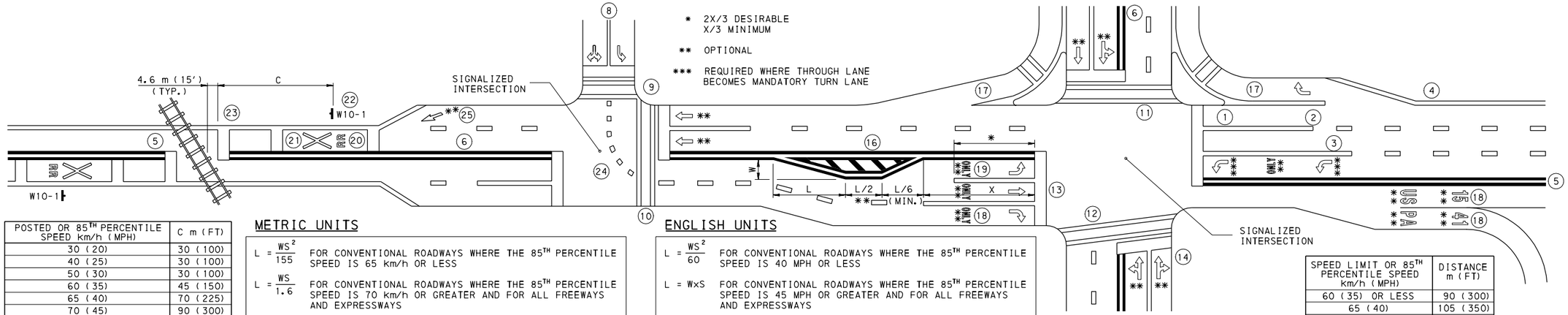

POSTED OR 85TH PERCENTILE SPEED km/h (MPH)	C m (FT)
30 (20)	30 (100)
40 (25)	30 (100)
50 (30)	30 (100)
60 (35)	45 (150)
65 (40)	70 (225)
70 (45)	90 (300)
80 (50)	115 (375)
90 (55)	137 (450)
100 (60)	168 (550)
105 (65)	198 (650)

LOCATION OF RAILROAD CROSSING SIGN

METRIC UNITS

$L = \frac{WS^2}{155}$ FOR CONVENTIONAL ROADWAYS WHERE THE 85TH PERCENTILE SPEED IS 65 km/h OR LESS

$L = \frac{WS}{1.6}$ FOR CONVENTIONAL ROADWAYS WHERE THE 85TH PERCENTILE SPEED IS 70 km/h OR GREATER AND FOR ALL FREEWAYS AND EXPRESSWAYS

WHERE: S = 85TH PERCENTILE SPEED (KMH)
W = OFFSET

X = 7.5 m PER 30 TURNING V.P.H. THE MINIMUM IS 22.5 m

ENGLISH UNITS

$L = \frac{WS^2}{60}$ FOR CONVENTIONAL ROADWAYS WHERE THE 85TH PERCENTILE SPEED IS 40 MPH OR LESS

L = WxS FOR CONVENTIONAL ROADWAYS WHERE THE 85TH PERCENTILE SPEED IS 45 MPH OR GREATER AND FOR ALL FREEWAYS AND EXPRESSWAYS

WHERE: S = 85TH PERCENTILE SPEED (MPH)
W = OFFSET

X = 25' PER 30 TURNING V.P.H. THE MINIMUM IS 75'

SPEED LIMIT OR 85TH PERCENTILE SPEED km/h (MPH)	DISTANCE m (FT)
60 (35) OR LESS	90 (300)
65 (40)	105 (350)
70 (45)	120 (400)
80 (50)	135 (450)
90 (55)	150 (500)

TABLE A
(SEE NOTE 5)

LEGEND

WHITE

YELLOW

DIRECTION OF TRAVEL

(3) NOTE REFERENCE NUMBER

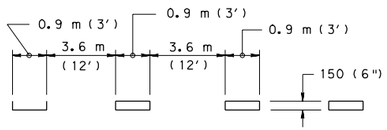

AUXILIARY LANE LINE

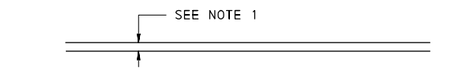

SOLID LANE LINE

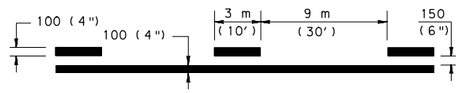

ONE-WAY BARRIER LINES
(SEE NOTE 5)

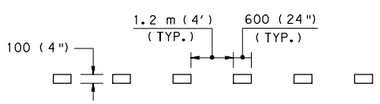

DOTTED EXTENSION LINE

TWO-WAY BARRIER LINES
(SEE NOTE 5)

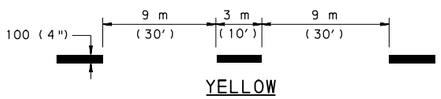

YELLOW

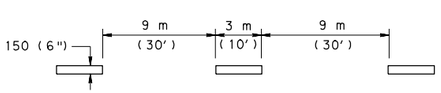

WHITE

BROKEN LANE LINE

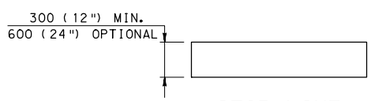

STOP LINE

CROSSWALK

NOTES:

LANE, EDGE AND CENTERLINES

1. MAKE ALL LANE LINES, EITHER SOLID OR BROKEN WHITE, 100 mm (4") MINIMUM WIDE ON TWO-LANE, TWO-WAY HIGHWAYS AND 150 mm (6") WIDE ON MULTI-LANE HIGHWAYS.
2. LANE LINES ON AN APPROACH TO A SIGNALIZED INTERSECTION SHALL BE SOLID WHITE FOR A DISTANCE OF 45 m (150') MEASURED FROM THE STOP BAR.
3. LANE LINES THAT DELINEATE THE EDGE OF A TURNING LANE ARE TO BE SOLID WHITE LINES WITH A LENGTH EQUAL 2X/3, BUT NOT LESS THAN 1/3 THE LENGTH OF THE TURN LANE, MEASURED FROM THE STOP BAR.
4. MAKE EDGE LINES SOLID WHITE LINES 100 mm (4") WIDE, EXCEPT USE SOLID YELLOW LINES WHEN ADJACENT TO A MEDIAN WHICH SEPARATES OPPOSING DIRECTIONS OF VEHICULAR TRAFFIC FLOW.
5. ON TWO-LANE, TWO-WAY HIGHWAYS, THE CENTER LINES ARE YELLOW, 100 mm (4") WIDE EITHER SOLID, BROKEN OR A COMBINATION THEREOF. A SOLID BARRIER LINE SHALL PRECEDE ALL APPROACHES TO RAILROAD CROSSINGS AND CONTROLLED INTERSECTIONS BY THE MINIMUM DISTANCE NOTED IN TABLE A.
6. ON FOUR OR MORE LANE UNDIVIDED HIGHWAYS, FOR CENTER LINES USE THE TWO-WAY BARRIER LINES.
7. "CENTER LANE LEFT TURN ONLY" MARKINGS ARE TWO (2) SETS OF ONE-WAY BARRIER LINES WITH BROKEN YELLOW LINES INSIDE OF THE SOLID YELLOW LINES.
8. EXTEND THE LANE LINES, EDGE LINES AND/OR CENTER LINES A DISTANCE OF 45 m (150') FROM THE STOP BAR ON MINOR APPROACHES, WHERE CONDITIONS PERMIT.

CROSSWALKS (FOR TYPES SEE SHEET 4 OF 8)

9. MAKE THE CROSSWALK LINES SOLID WHITE AND NOT LESS THAN 150 mm (6") WIDE, MARKING BOTH EDGES OF THE CROSSWALK AREA.
10. EXTEND THE CROSSWALK LINES FROM FACE OF CURB TO FACE OF CURB OR EDGE OF SHOULDER AS APPLICABLE.
11. MAKE THE LINES FORMING A CROSSWALK PARALLEL.
12. THE MINIMUM WIDTH OF CROSSWALKS IS 1.8 m (6').

STOP LINE

13. STOP LINES ARE SOLID WHITE LINES THAT COMPLETELY TRAVERSE EACH TRAFFIC LANE. AT AN INTERSECTION WITH A STOP SIGN, THE STOP LINE SHOULD BE PLACED AT A LOCATION NO LESS THAN 1.2 m (4'), OR MORE THAN 9 m (30') FROM THE NEAREST EDGE OF THE INTERSECTING ROADWAY TO ENSURE MAXIMUM SIGHT DISTANCE TO VEHICLES ON THE CROSSING ROUTE. WHEN USED ON MULTI-LANE APPROACH TO A SIGNALIZED INTERSECTION, THE STOP LINE MAY BE STAGGERED TO ASSIST TURNING VEHICLES AND TO IMPROVE SIGHT DISTANCE FOR MOTORIST DESIRING TO MAKE A TURN ON RED.
14. LOCATE STOP LINES AT A MINIMUM OF 1.2 m (4') IN ADVANCE OF AND PARALLEL TO THE CROSSWALK LINES UNLESS OTHERWISE NOTED.

YIELD LINE (FOR DETAILS SEE SHEET 5 OF 8)

15. YEILD LINES ARE TO CONSIST OF A ROW OF SOLID WHITE ISOSCELES TRIANGLES POINTING TOWARD APPROACHING VEHICLES EXTENDING ACROSS APPROACH LANES TO INDICATE THE POINT AT WHICH THE YEILD IS INTENDED OR REQUIRED TO BE MADE.

MEDIAN MARKINGS

16. TRANSVERSE MEDIAN MARKINGS ARE 600 mm (24") WIDE YELLOW LINES SPACED AS INDICATED ON SHEET 4 OF 7, WITHIN TWO (2) SETS OF TWO-WAY BARRIER LINES. USE TRANSVERSE LINES ONLY WHEN REQUIRED TO PROVIDE EMPHASIS IF THE SIGHT DISTANCE OR VISIBILITY IS RESTRICTED.

GORE MARKINGS

17. EDGE LINES ARE 100 mm (4") SOLID WHITE LINES. USE TRANSVERSE OR DIAGONAL LINES ONLY WHEN REQUIRED TO PROVIDE ADDITIONAL EMPHASIS IF THE SIGHT DISTANCE OR VISIBILITY OF GORE IS RESTRICTED.

PAVEMENT LEGENDS

18. WORD AND SYMBOL MARKINGS SHOULD NOT EXCEED THREE LINES OF INFORMATION. IF A PAVEMENT MARKING WORD MESSAGE CONSISTS OF MORE THAN ONE LINE OF INFORMATION, IT SHOULD READ IN THE DIRECTION OF TRAVEL. THE FIRST WORD OF THE MESSAGE SHOULD BE NEAREST TO THE ROAD USER. LOCATE ANY SPECIFIED WORD MESSAGES IN ADVANCE OF ITS ACCOMPANYING SYMBOL BY A DISTANCE NOT LESS THAN 4 TIMES THE LETTER HEIGHT FOR LOW-SPEED [≤55 km/h (35MPH)], NOR MORE THAN 10 TIMES THE LETTER HEIGHT FOR HIGH-SPEED [>55 km/h (35 MPH)]. ON ALL APPROACHES, CENTER THE LEGENDS WITHIN THE LANE.
19. ALIGN THE LEGENDS TRANSVERSELY ACROSS EACH PAVEMENT. THE MINIMUM DISTANCE BETWEEN THE ARROW SYMBOL AND STOP BAR IS 6 m (20').

RAILROAD CROSSING MARKINGS

20. CENTER THE RAILROAD SYMBOLS WITHIN EACH LANE ON ALL PAVED APPROACHES TO HIGHWAY-RAIL GRADE CROSSINGS. IN THOSE SITUATIONS WHERE THERE IS INADEQUATE SPACE FOR THE PAVEMENT MARKINGS OR WHERE THE INSTALLATION WOULD CREATE OPERATIONAL PROBLEMS WITH TURNING LANES OR OTHER SPECIAL CONDITIONS, PAVEMENT MARKINGS ARE NOT REQUIRED PROVIDING AN ENGINEERING STUDY INDICATES THAT OTHER TRAFFIC CONTROL DEVICES PROVIDE SUITABLE WARNING AND CONTROL.
21. ON MULTI-LANE ROADS EXTEND THE TRANSVERSE LINES ACROSS ALL TRAFFIC LANES ON EACH APPROACH AND USE INDIVIDUAL SYMBOLS IN EACH APPROACH LANE.
22. LOCATE A PORTION OF RAILROAD PAVEMENT MARKING SYMBOL DIRECTLY OPPOSITE THE ADVANCE WARNING SIGN W10-1. USE DIMENSION "C" FOR PLACEMENT OF ADVANCE WARNING SIGN W10-1.
23. LOCATE STOP LINES 2.4 m (8') FROM THE GATE (IF PRESENT), BUT NO CLOSER THAN 4.6 m (15') FROM THE NEAREST RAIL.

DOTTED EXTENSION LINES

24. DOTTED EXTENSION LINES MAY BE USED TO DELINEATE TRAVEL PATHS FOR TURNING TRAFFIC MOVEMENTS AT OFFSET, SKEWED OR COMPLEX INTERSECTIONS AND FOR MULTIPLE TURN LANES.

LANE REDUCTION ARROW (LRA)

25. FOR DETAILS SEE SHEET 7 OF 8.

GENERAL

26. ALL DIMENSIONS ARE IN MILLIMETERS UNLESS OTHERWISE NOTED. ENGLISH UNITS IN PARENTHESIS ( ).
27. EITHER ALL METRIC OR ALL ENGLISH UNITS MUST BE USED ON PLANS. METRIC AND ENGLISH UNITS SHOWN MAY NOT BE MIXED.

COMMONWEALTH OF PENNSYLVANIA
DEPARTMENT OF TRANSPORTATION
BUREAU OF HIGHWAY SAFETY AND TRAFFIC ENGINEERING

PAVEMENT MARKINGS

CONVENTIONAL

RECOMMENDED MAY 25, 2007 Glenn C Rowe CHIEF, TRAFFIC ENGINEERING AND OPERATIONS DIVISION	RECOMMENDED MAY 25, 2007 CHIEF HIGHWAY ENGINEER	SHT. 3 OF 8 TC-8600

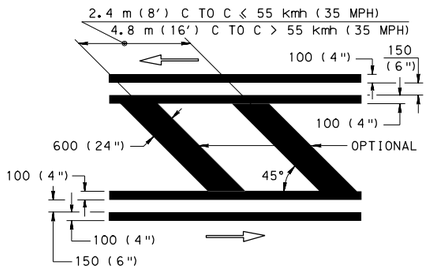

TRANSVERSE MEDIAN MARKING

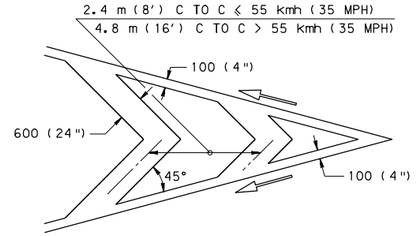

CHEVRON GORE MARKING
(OPTIONAL)

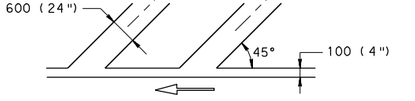

ONE-WAY BARRIER GORE MARKING
(OPTIONAL)

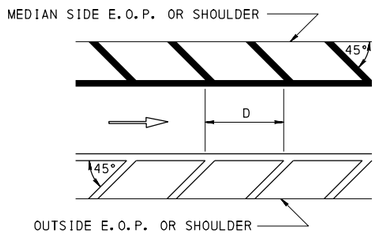

D = SPACING OF DIAGONAL LINES (TYPICALLY EQUAL IN FEET TO THE POSTED SPEED LIMIT). INCREASE SPACING OF DIAGONALS TO 60 m (200') OR MORE ON INTERSTATE ROADWAYS.

EDGE OF PAVEMENT OR SHOULDER ISLAND

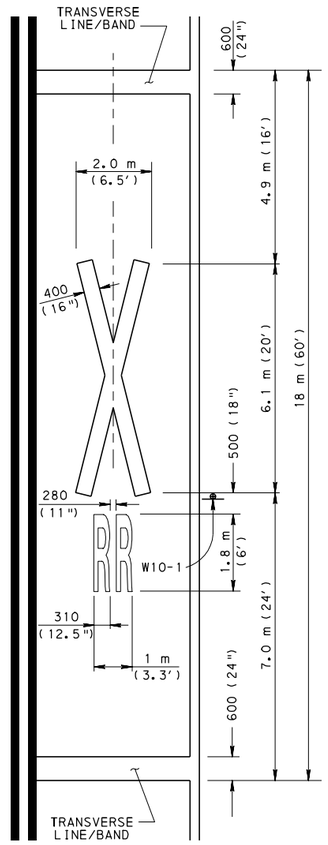

RAILROAD CROSSING MARKING
(SEE MUTCD FIG. 8B-6 AND 8B-7 FOR MORE DETAILS)

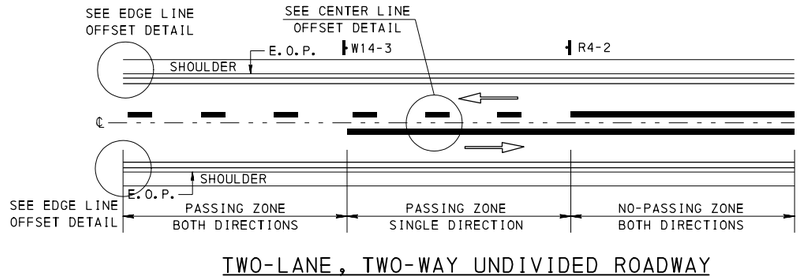

TWO-LANE, TWO-WAY UNDIVIDED ROADWAY

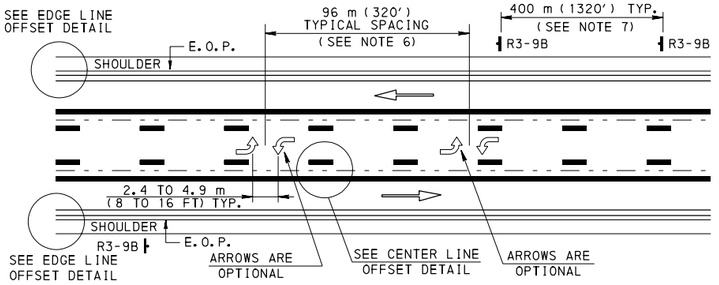

TWO-LANE, TWO-WAY UNDIVIDED ROADWAY WITH TWO-WAY LEFT TURN LANE

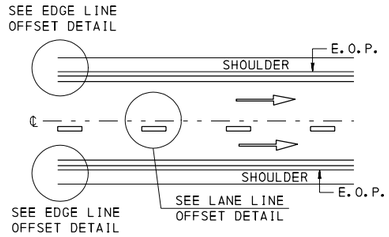

MULTI-LANE ROADWAY

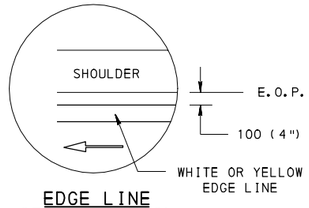

EDGE LINE OFFSET DETAIL

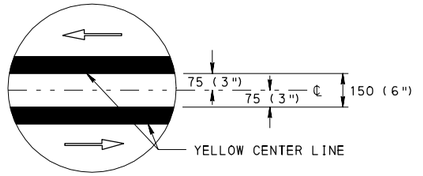

CENTER LINE OFFSET DETAIL

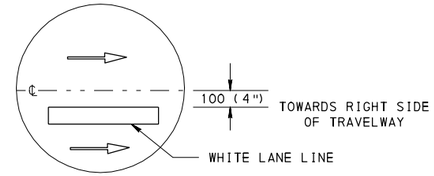

LANE LINE OFFSET DETAIL

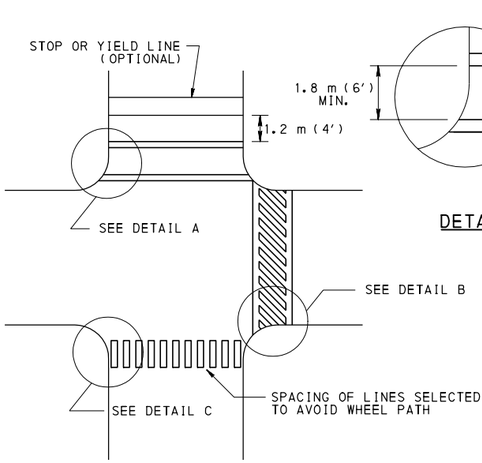

TYPICAL TYPES OF CROSSWALK MARKINGS
(SEE PUBLICATION 72M, RC-67M FOR PLACEMENT OF CROSSWALKS AT WHEELCHAIR RAMPS)

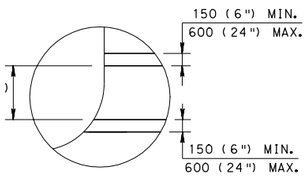

DETAIL A

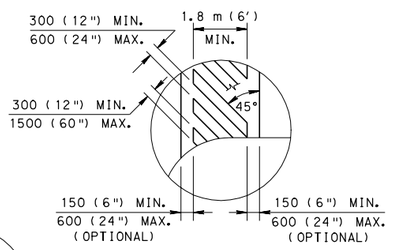

DETAIL B

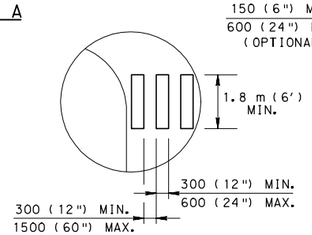

DETAIL C

LEGEND

WHITE

YELLOW

DIRECTION OF TRAVEL

NOTES:

1. OFFSET PAVEMENT MARKING LINES 100 mm (4") FROM LONGITUDINAL PAVEMENT CONSTRUCTION JOINTS, AS DETERMINED BY THE ENGINEER OR AS INDICATED BELOW:
   - YELLOW SKIP LINES ON TWO-LANE, TWO-WAY ROADWAYS (WHERE PASSING IS ALLOWED IN BOTH DIRECTIONS) CAN BE OFFSET 75 mm (3") FROM THE CENTER LINE TO ALLOW FOR FUTURE REPAINTING OF THE LINES WITH COMPATIBLE DEPARTMENT EQUIPMENT.
   - OFFSET DOUBLE YELLOW CENTER LINES 75 mm (3") ON EACH SIDE OF THE CENTER LINE TO ALLOW FOR PLACEMENT OF PAVEMENT MARKERS (PRESENT OR FUTURE PLACEMENT).
2. PASSING - NO PASSING ZONES WILL BE DETERMINED BY THE ENGINEER.
3. EDGE LINES ARE NOT REQUIRED ALONG CURB AND GUTTER LOCATIONS.
4. DO NOT CONTINUE EDGE LINES THRU INTERSECTIONS, AND DO NOT BREAK EDGE LINES AT DRIVEWAYS.
5. PLACE EDGE LINES AT RAISED ISLAND LOCATIONS, OUTLINING THE SHAPE OF THE RAISED ISLAND.
6. 96 m (320') TYPICAL SPACING BETWEEN SETS OF ARROW SYMBOLS CAN BE INCREASED OR DECREASED AS DETERMINED BY THE ENGINEER.
7. 400 m (1320') TYPICAL DISTANCE BETWEEN CENTER LANE - LEFT TURN ONLY SIGNS (R3-9B) CAN BE INCREASED OR DECREASED AS DETERMINED BY THE ENGINEER.
8. ALL DIMENSIONS ARE IN MILLIMETERS UNLESS OTHERWISE NOTED. ENGLISH UNITS IN PARENTHESIS ( ).
9. EITHER ALL METRIC OR ALL ENGLISH UNITS MUST BE USED ON PLANS. METRIC AND ENGLISH UNITS SHOWN MAY NOT BE MIXED.

COMMONWEALTH OF PENNSYLVANIA
DEPARTMENT OF TRANSPORTATION
BUREAU OF HIGHWAY SAFETY AND TRAFFIC ENGINEERING

PAVEMENT MARKINGS

CONVENTIONAL

RECOMMENDED MAY 25, 2007
Glenn C Rowe
CHIEF, TRAFFIC ENGINEERING AND OPERATIONS DIVISION

RECOMMENDED MAY 25, 2007
M. C. Patel
CHIEF HIGHWAY ENGINEER

SHT. 4 OF 8

TC-8600

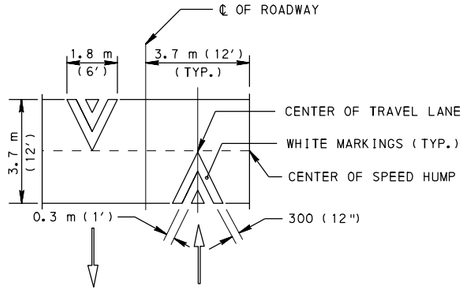

TYPICAL PAVEMENT MARKINGS
FOR SPEED HUMPS

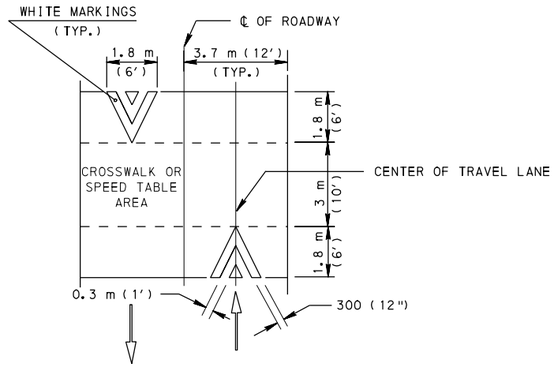

TYPICAL PAVEMENT MARKINGS FOR SPEED
TABLES OR SPEED HUMPS WITH CROSSWALKS

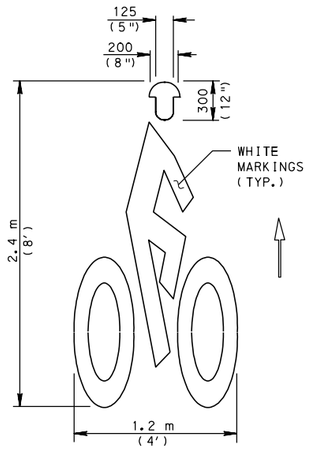

BICYCLE WITH RIDER SYMBOL
(SEE NOTE 2)

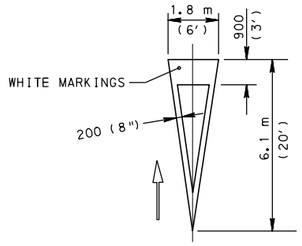

POSTED OR STATUTORY SPEED
LIMIT 70 km/h (45 MPH) OR GREATER
(SEE NOTE 3)

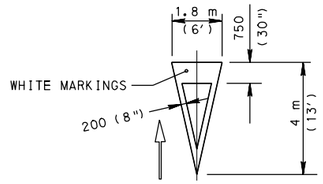

POSTED OR STATUTORY SPEED
LIMIT LESS THAN 70 km/h (45 MPH)
(SEE NOTE 3)

TYPICAL YIELD AHEAD TRIANGLE SYMBOLS

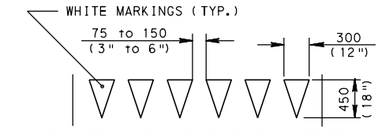

POSTED OR STATUTORY SPEED
LIMIT LESS THAN 65 km/h (40 MPH)

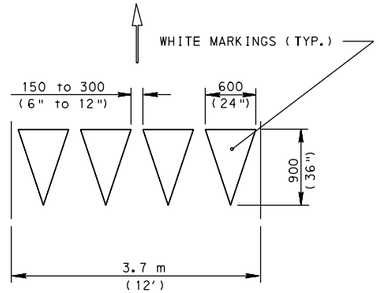

ANY SPEED LIMIT

TYPICAL YIELD LINE LAYOUT
(OPTIONAL)

LEGEND

WHITE

YELLOW

DIRECTION OF TRAVEL

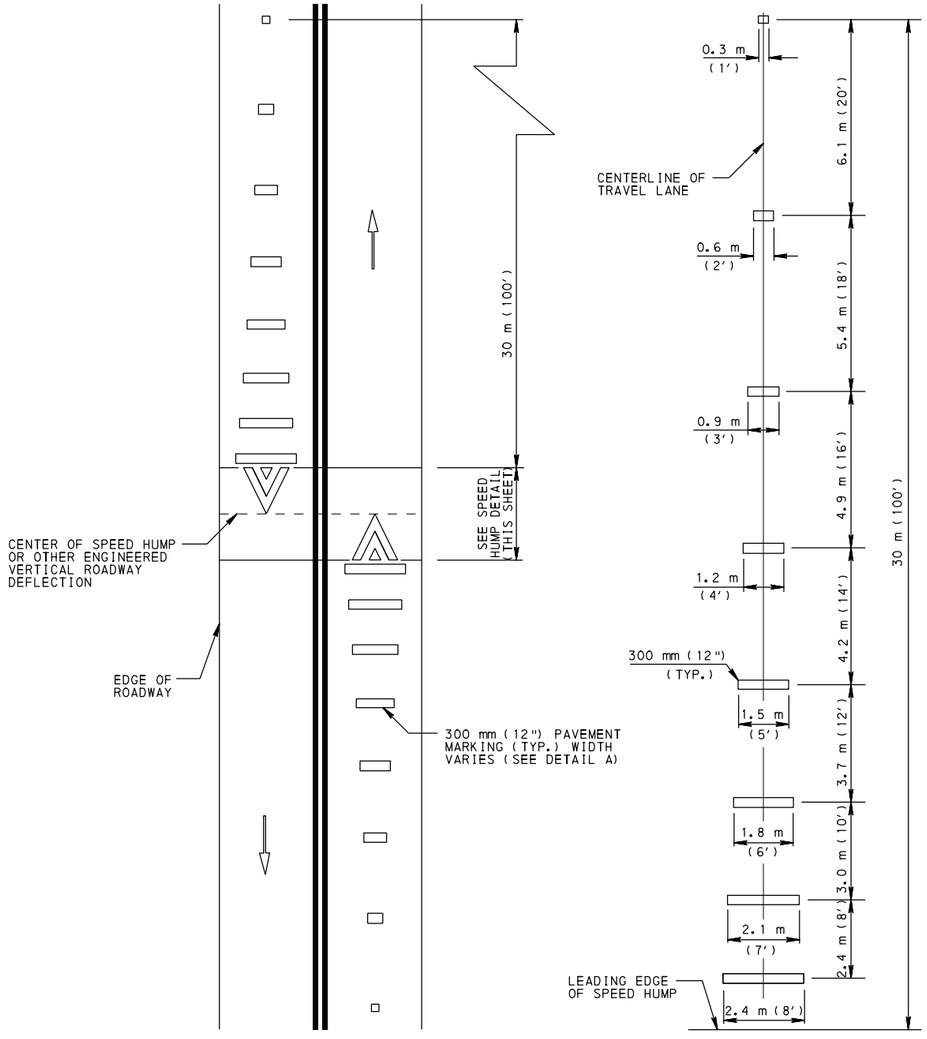

DETAIL A

TYPICAL ADVANCE WARNING MARKING FOR SPEED HUMPS OR
OTHER ENGINEERED VERTICAL ROADWAY DEFLECTIONS

NOTES:

1. YIELD LINES MAY BE USED TO INDICATE THE POINT BEHIND WHICH VEHICLES ARE REQUIRED TO YIELD IN COMPLIANCE WITH A YIELD SIGN.
2. YIELD LINES AND BICYCLE RIDER SYMBOL MAY BE SMALLER THAN SUGGESTED WHEN INSTALLED ON MUCH NARROWER, SLOW-SPEED FACILITIES SUCH AS SHARED-USE PATHS.
3. USE MUTCD CHAPTER 2C, TABLE 2C-4, CONDITION "B" FOR ADVANCE PLACEMENT DISTANCE OF YIELD AHEAD TRIANGLE SYMBOL.
4. ALL DIMENSIONS ARE IN MILLIMETERS UNLESS OTHERWISE NOTED. ENGLISH UNITS IN PARENTHESIS ( ).
5. EITHER ALL METRIC OR ALL ENGLISH UNITS MUST BE USED ON PLANS. METRIC AND ENGLISH UNITS SHOWN MAY NOT BE MIXED.

COMMONWEALTH OF PENNSYLVANIA
DEPARTMENT OF TRANSPORTATION
BUREAU OF HIGHWAY SAFETY AND TRAFFIC ENGINEERING

PAVEMENT MARKINGS

CONVENTIONAL
SPEED HUMPS, YIELD AND BICYCLE

RECOMMENDED MAY 25, 2007	RECOMMENDED MAY 25, 2007	SHT. 5 OF 8
Glen C Rowe	M. Patel	
CHIEF, TRAFFIC ENGINEERING AND OPERATIONS DIVISION	CHIEF HIGHWAY ENGINEER	TC-8600

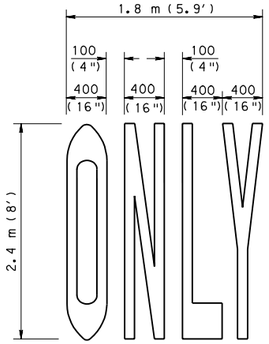

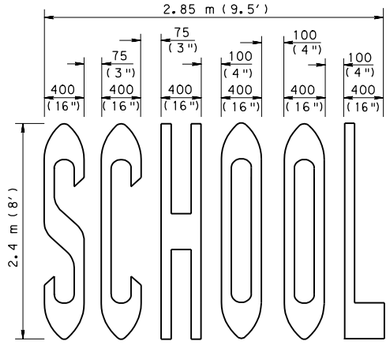

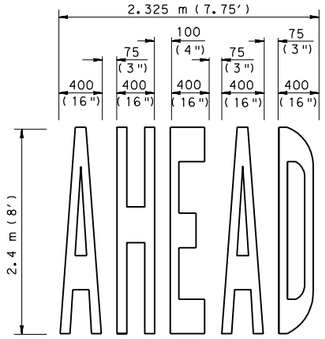

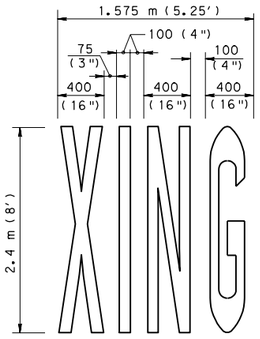

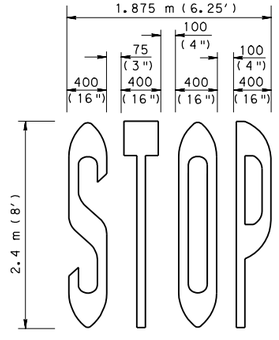

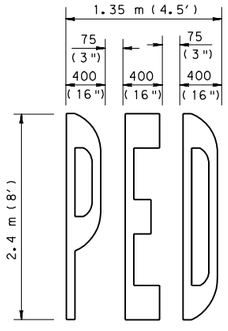

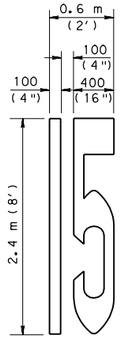

SEE FHWA'S STANDARD ALPHABETS FOR HIGHWAY SIGNS AND PAVEMENT MARKINGS FOR OTHER DETAILS.

LEGENDS

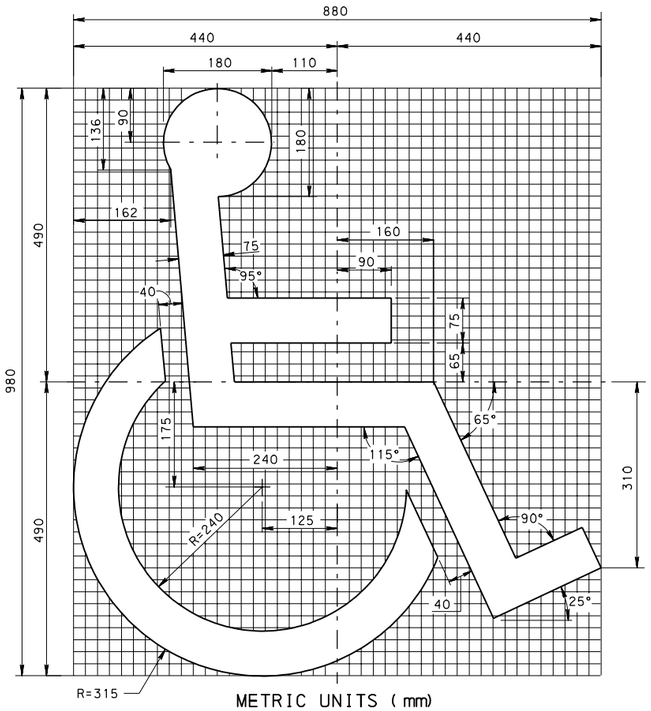

METRIC UNITS (mm)
(EACH GRID EQUALS 20 x 20)

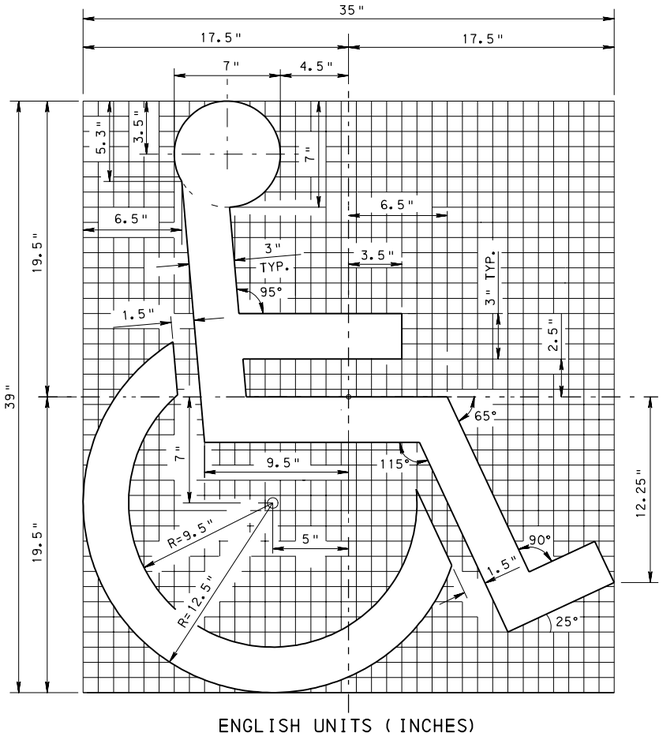

ENGLISH UNITS (INCHES)
(EACH GRID EQUALS 1" x 1")

HANDICAPPED MARKING

NOTES:

1. HANDICAPPED SYMBOL SHALL BE WHITE. IT MAY BE INSTALLED ALONE OR WITH A BLUE BACKGROUND WHICH EXTENDS A MINIMUM OF 75 mm (3") BEYOND THE SYMBOL. IF MATERIAL THICKNESS OF SYMBOL IS GREATER THAN 500 µm (20 MILS) THE BLUE BACKGROUND MUST BE USED. ANY REDUCTION IN DIMENSIONS MUST BE APPROVED BY THE DEPARTMENT.
2. ALL DIMENSIONS ARE IN MILLIMETERS UNLESS OTHERWISE NOTED. ENGLISH UNITS IN PARENTHESIS ( ).
3. EITHER ALL METRIC OR ALL ENGLISH UNITS MUST BE USED ON PLANS. METRIC AND ENGLISH UNITS SHOWN MAY NOT BE MIXED.

COMMONWEALTH OF PENNSYLVANIA
DEPARTMENT OF TRANSPORTATION
BUREAU OF HIGHWAY SAFETY AND TRAFFIC ENGINEERING

PAVEMENT MARKINGS

LEGENDS AND SYMBOLS

RECOMMENDED MAY 25, 2007 Glenn C Rowe CHIEF, TRAFFIC ENGINEERING AND OPERATIONS DIVISION	RECOMMENDED MAY 25, 2007 M. C. Patel CHIEF HIGHWAY ENGINEER	SHT. 6 OF 8 TC-8600

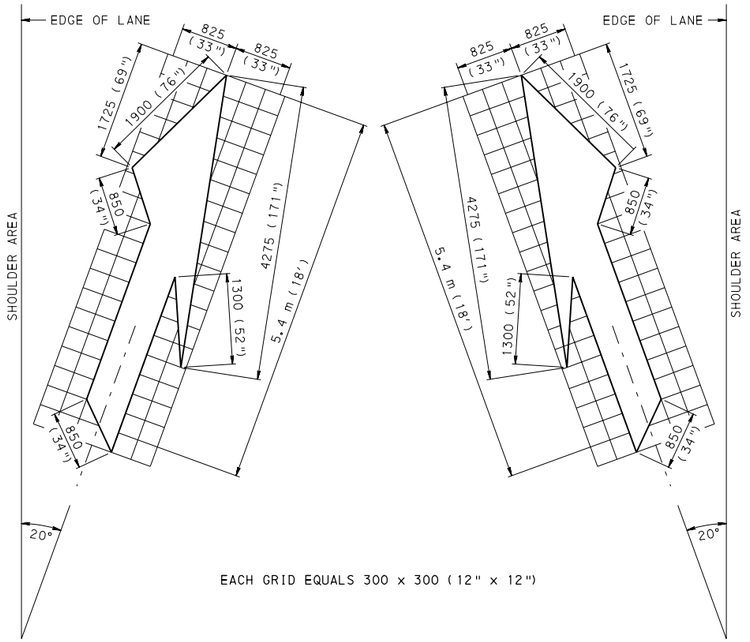

EACH GRID EQUALS 300 x 300 (12" x 12")

LEFT LANE
(MERGE RIGHT)

RIGHT LANE
(MERGE LEFT)

LANE REDUCTION TRANSITION ARROW

1. LOCATE LRA IN CENTER OF LANE.
2. PLACE LRAS IN GROUPS OF THREE WHEN CONDITIONS PERMIT.
3. FOLLOW MUTCD - TABLE 2C-4 (CONDITION A) FOR PLACEMENT OF FIRST LANE REDUCTION ARROW IN ADVANCE OF TAPER.

INTERSTATE - EXPRESSWAY/FREEWAY

4. PLACE ADDITIONAL LANE REDUCTION ARROWS AT 180 m (600') INTERVALS.

CONVENTIONAL ROADWAYS

5. PLACE ADDITIONAL LANE REDUCTION ARROWS AT 90 m (300') INTERVALS.

LANE REDUCTION ARROW PLACEMENT

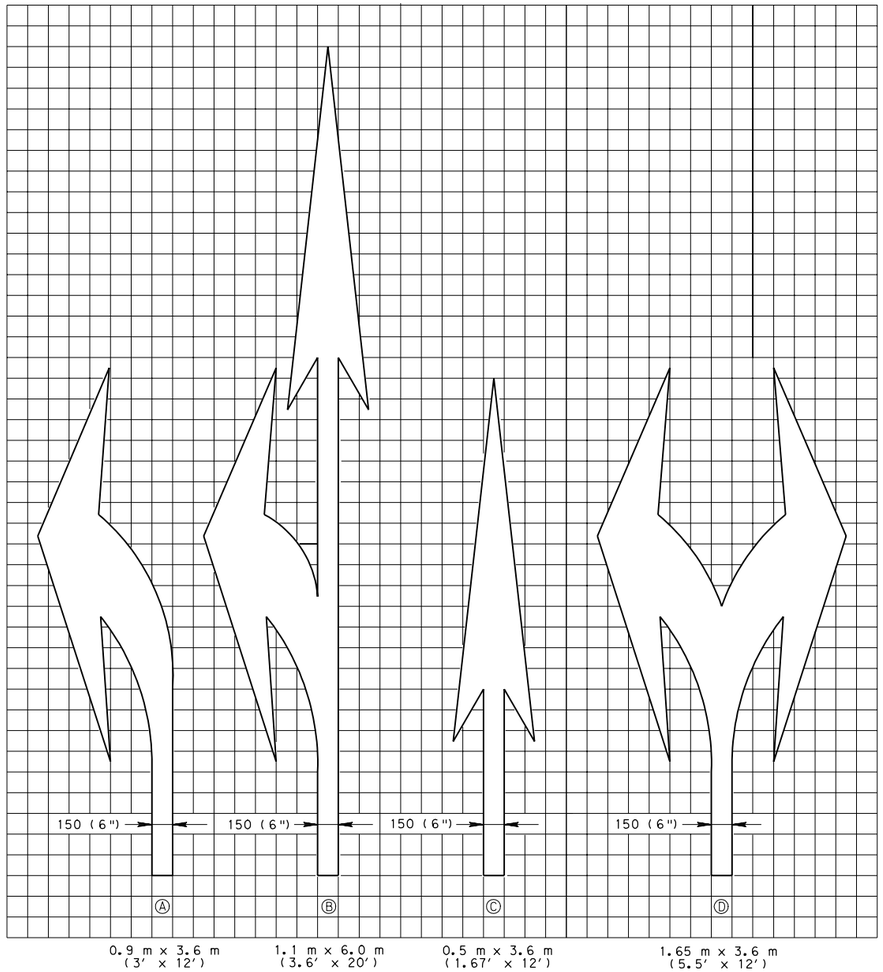

EACH GRID EQUALS 150 x 150 (6" x 6")

ARROW	QUANTITY FOR PAVEMENT MARKING REMOVAL
Ⓐ	1.11 m^2 (20 FT^2)
Ⓑ	2.04 m^2 (32 FT^2)
Ⓒ	0.84 m^2 (13 FT^2)
Ⓓ	1.95 m^2 (32 FT^2)

MARKING ARROWS

NOTES:

1. ALL DIMENSIONS ARE IN MILLIMETERS UNLESS OTHERWISE NOTED. ENGLISH UNITS IN PARENTHESIS ( ).
2. EITHER ALL METRIC OR ALL ENGLISH UNITS MUST BE USED ON PLANS. METRIC AND ENGLISH UNITS SHOWN MAY NOT BE MIXED.

COMMONWEALTH OF PENNSYLVANIA
DEPARTMENT OF TRANSPORTATION
BUREAU OF HIGHWAY SAFETY AND TRAFFIC ENGINEERING

PAVEMENT MARKINGS

LEGENDS AND SYMBOLS

RECOMMENDED MAY 25, 2007
Glenn C Rowe
CHIEF, TRAFFIC ENGINEERING AND OPERATIONS DIVISION

RECOMMENDED MAY 25, 2007
M. L. Patel
CHIEF HIGHWAY ENGINEER

SHT. 7 OF 8

TC-8600

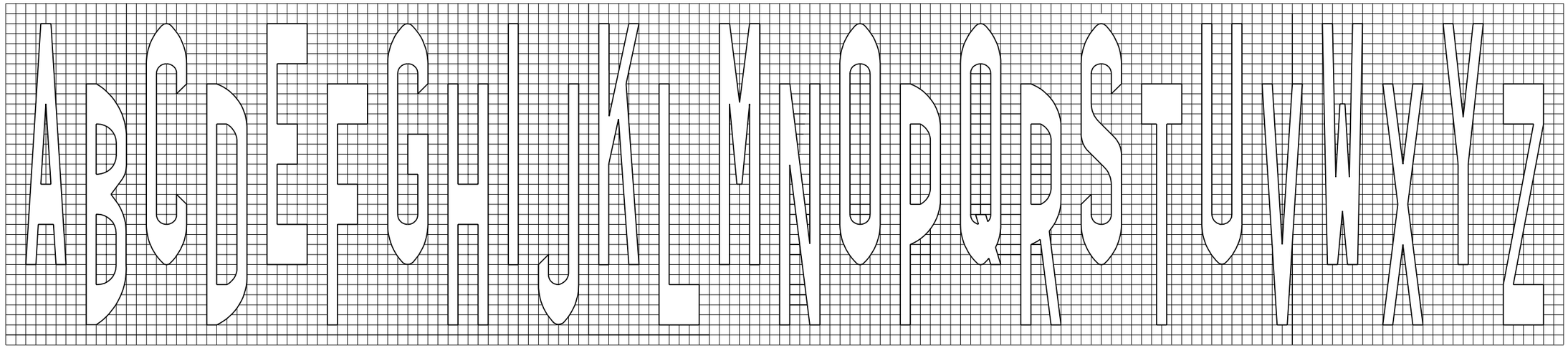

STANDARD ALPHABET

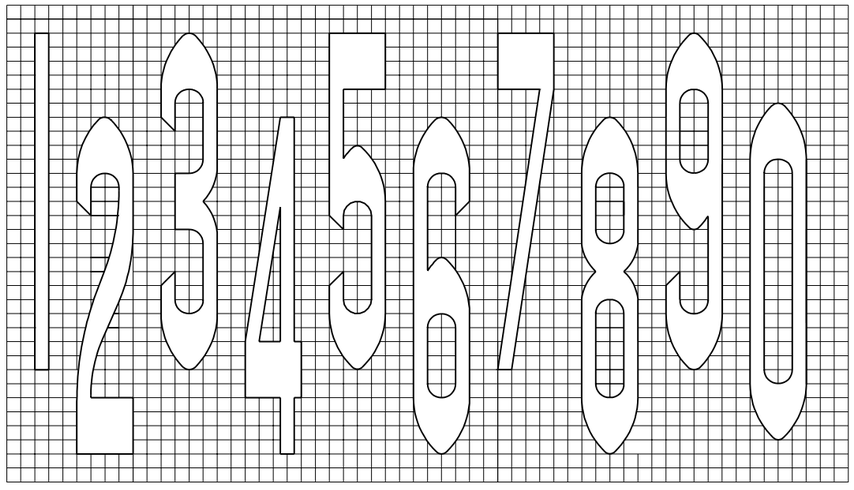

STANDARD NUMERALS

NOTES:

1. STANDARD CHARACTERS ARE 24 GRID UNITS HIGH AND 4 UNITS WIDE (EXCEPT LETTER "I" AND THE NUMBER "1" WHICH ARE 1 UNIT WIDE).
2. VERTICAL STROKES ARE 1 UNIT WIDE, HORIZONTAL STROKES ARE 4 UNITS HIGH.
3. SPACE 1 UNIT (MIN.) BETWEEN CHARACTERS OR AS OTHERWISE SHOWN (OPTICAL SPACING MAY BE USED).
4. STANDARD CHARACTER HEIGHTS ARE 2.4 m (8'), EXCEPT FOR THE 1.8 m (6') RAILROAD "R" SYMBOL.
5. FOR 2.4 m (8') HIGH CHARACTERS, THE WIDTH IS 400 mm (16") (USE 100 mm (4") FOR EACH GRID SQUARE).
6. FOR 3.0 m (10') HIGH CHARACTERS, THE WIDTH IS 500 mm (20") (USE 125 mm (5") FOR EACH GRID SQUARE).
7. FOR 1.8 m (6') HIGH CHARACTERS, THE WIDTH IS 300 mm (12") (USE 75 mm (3") FOR EACH GRID SQUARE).

COMMONWEALTH OF PENNSYLVANIA
DEPARTMENT OF TRANSPORTATION
BUREAU OF HIGHWAY SAFETY AND TRAFFIC ENGINEERING

PAVEMENT MARKINGS

LEGEND AND SYMBOLS (STANDARD ALPHABET & NUMERALS)

RECOMMENDED MAY 25, 2007 Glenn C. Rowe CHIEF, TRAFFIC ENGINEERING AND OPERATIONS DIVISION	RECOMMENDED MAY 25, 2007 M. G. Patel CHIEF HIGHWAY ENGINEER	SHT. 8 OF 8 TC-8600

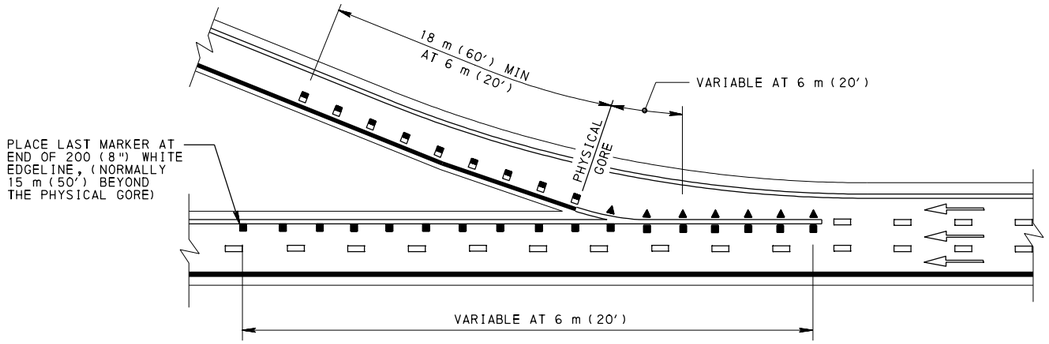

EXIT GORE AREA

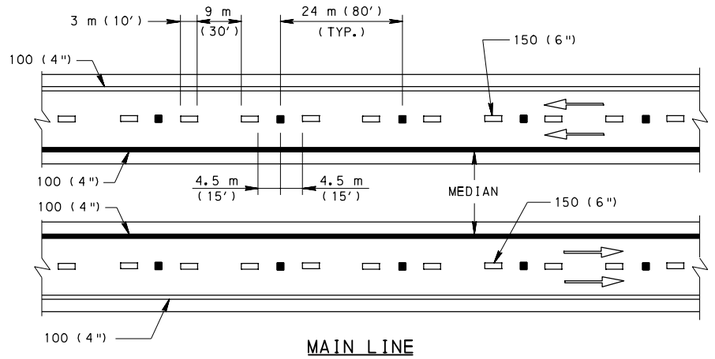

MAIN LINE

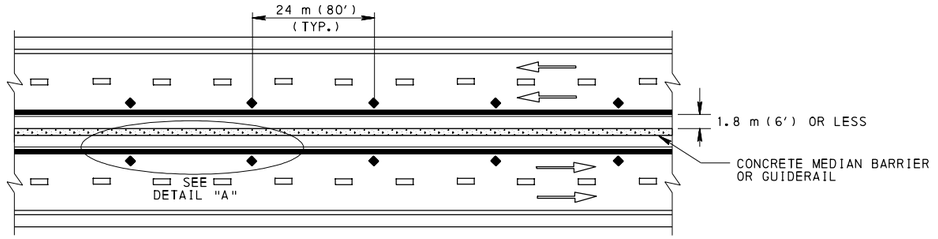

CONCRETE MEDIAN BARRIER OR GUIDERAIL
WITHIN 6 FEET OF TRAVEL LANE

INSTALLATION PATTERNS - FREEWAYS & EXPRESSWAYS

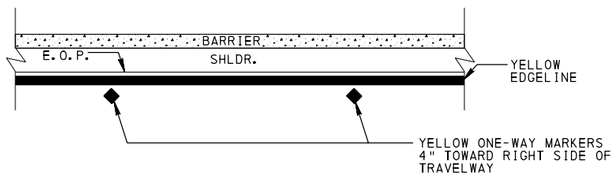

DETAIL "A"

LEGEND

- WHITE ONE-WAY MARKER
- YELLOW ONE-WAY MARKER
- WHITE/RED TWO-WAY MARKER
- YELLOW/RED TWO-WAY MARKER
- WHITE
- YELLOW
- BROKEN WHITE
- DIRECTION OF TRAVEL

NOTES:

1. MATERIAL AND WORKMANSHIP IN ACCORDANCE WITH PENNSYLVANIA DEPARTMENT OF TRANSPORTATION PUBLICATION 408, OR AS INDICATED OR DIRECTED.
2. PLACE MARKERS ALONG A LANE LINE (BROKEN LINE) MIDWAY BETWEEN THE PAINTED PORTIONS.
3. PLACE MARKERS ALONG AN EDGE OR CHANNELIZING LINE WITH NEAR EDGE OF MARKER CASTING 100 mm (4") FROM NEAR EDGE OF PAINTED LINE, WHEN CONCRETE MEDIAN BARRIER OR GUILDRAIL IS WITHIN 1.8 m (6') OF TRAVEL LANE.
4. INSTALL MARKERS 100 mm (4") MIN. FROM ANY PAVEMENT SEAM, JOINT OR EDGE.
5. SEE SHEET 4 OF 4 FOR MARKER DETAILS.
6. FOR MARKER SPACING ON CURVES SEE SHEET 3 OF 4.
7. ALL DIMENSIONS ARE IN MILLIMETERS UNLESS OTHERWISE NOTED. ENGLISH UNITS IN PARENTHESIS ( ).
8. EITHER ALL METRIC OR ALL ENGLISH UNITS MUST BE USED ON PLANS. METRIC AND ENGLISH UNITS SHOWN MAY NOT BE MIXED.

COMMONWEALTH OF PENNSYLVANIA
DEPARTMENT OF TRANSPORTATION
BUREAU OF HIGHWAY SAFETY AND TRAFFIC ENGINEERING

SNOWPLOWABLE RAISED PAVEMENT MARKERS

RECOMMENDED MAY 25, 2007	RECOMMENDED MAY 25, 2007	SHT. 1 OF 4
Glen C Rowe	M. L. Patel	
CHIEF, TRAFFIC ENGINEERING AND OPERATIONS DIVISION	CHIEF HIGHWAY ENGINEER	TC-8602

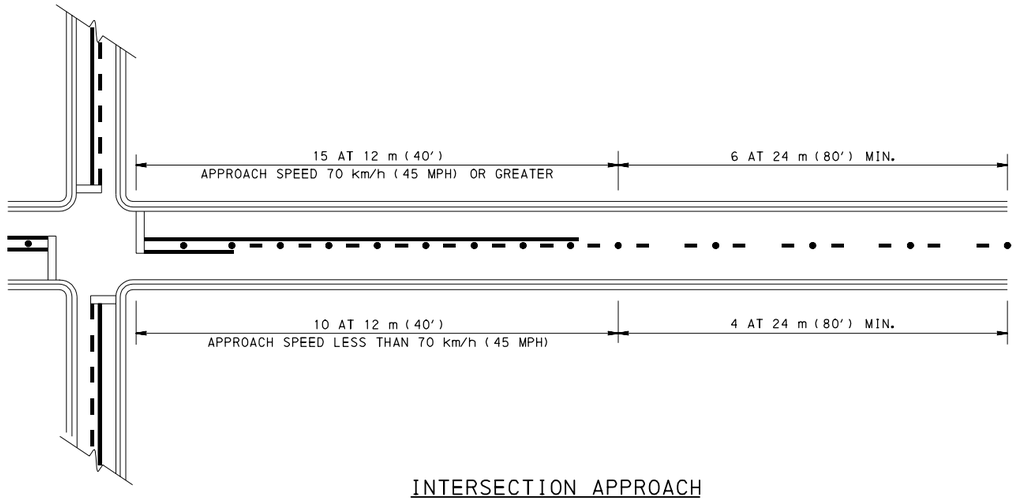

INTERSECTION APPROACH

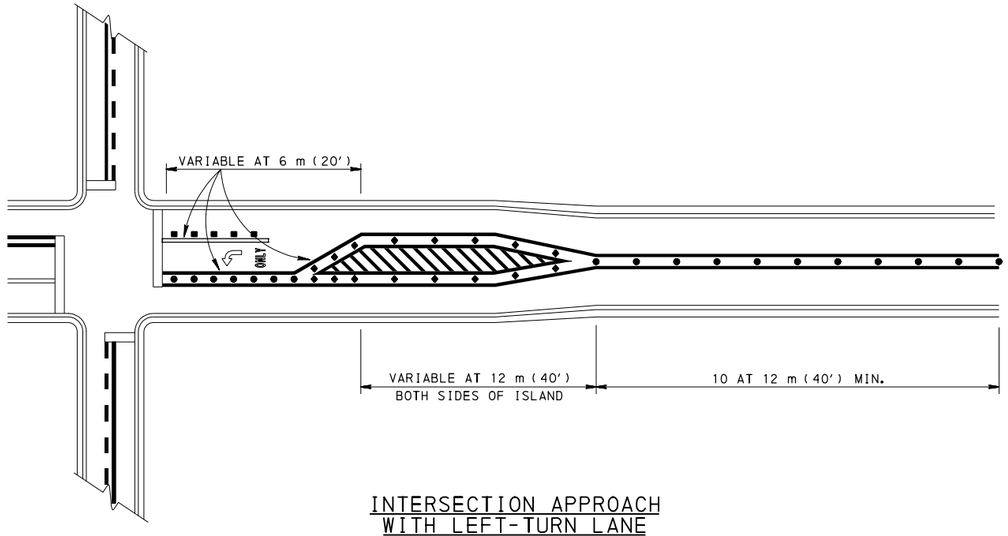

INTERSECTION APPROACH
WITH LEFT-TURN LANE

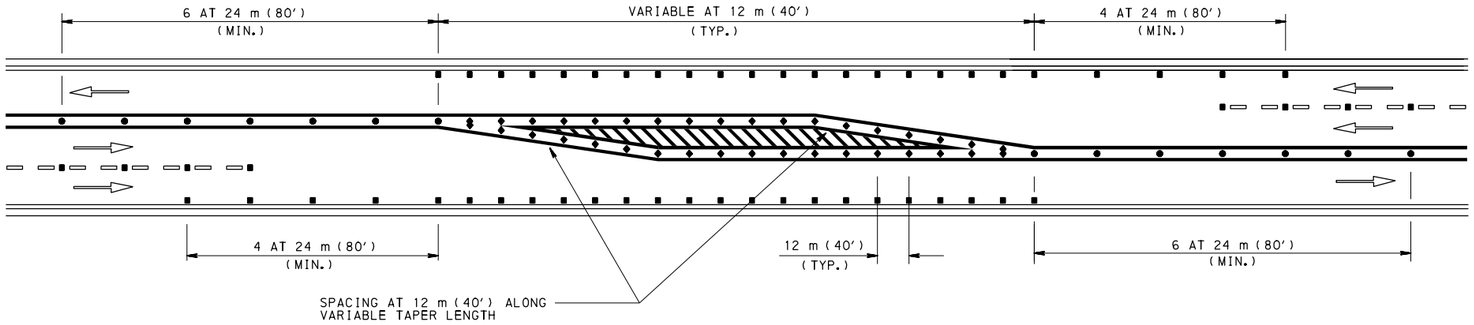

TWO LANES TO ONE LANE

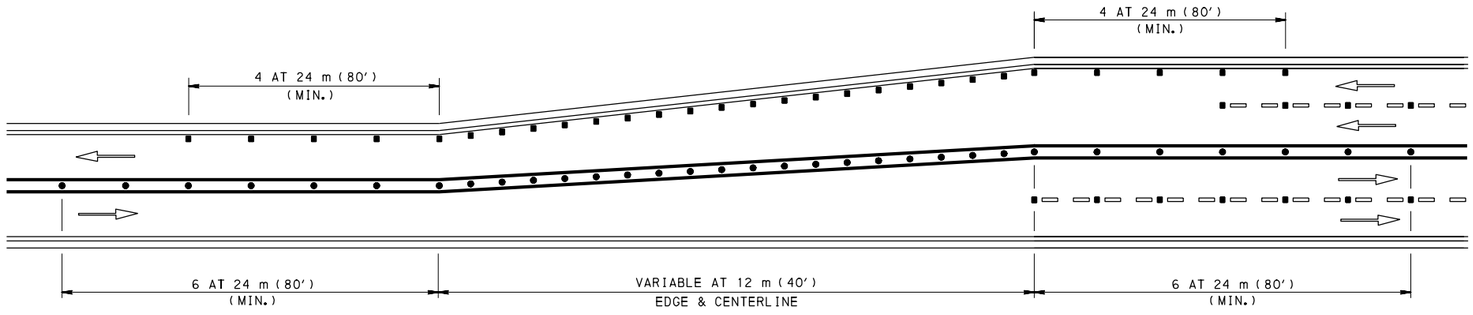

FOUR LANES TO TWO LANES

TRANSITION

LEGEND

- ■ WHITE ONE-WAY MARKER
- ◆ YELLOW - ONE-WAY MARKER
- ● YELLOW/YELLOW - TWO-WAY MARKER
- WHITE
- YELLOW
- BROKEN WHITE
- BROKEN YELLOW
- DIRECTION OF TRAVEL

NOTES:

1. SEE SHEET 3 OF 4 FOR ADDITIONAL NOTES.
2. FOR MARKER SPACING ON CURVES SEE SHEET 3 OF 4.
3. EITHER ALL METRIC OR ALL ENGLISH UNITS MUST BE USED ON PLANS. METRIC AND ENGLISH UNITS SHOWN MAY NOT BE MIXED.

COMMONWEALTH OF PENNSYLVANIA
DEPARTMENT OF TRANSPORTATION
BUREAU OF HIGHWAY SAFETY AND TRAFFIC ENGINEERING

SNOWPLOWABLE RAISED PAVEMENT MARKERS

RECOMMENDED MAY 25, 2007 Glen C Rowe CHIEF, TRAFFIC ENGINEERING AND OPERATIONS DIVISION	RECOMMENDED MAY 25, 2007 M. Patel CHIEF HIGHWAY ENGINEER	SHT. 2 OF 4 TC-8602

TWO-LANE ROADWAY

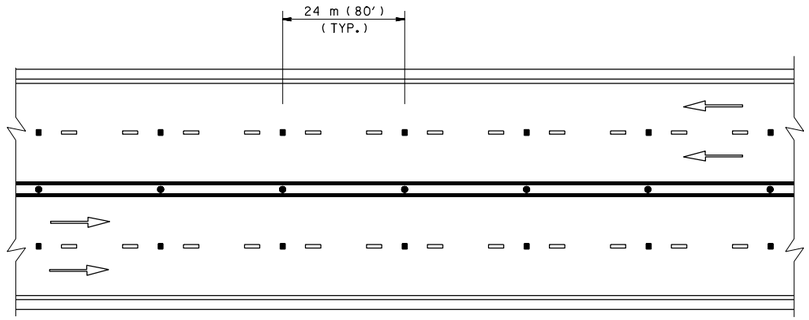

UNDIVIDED FOUR LANES

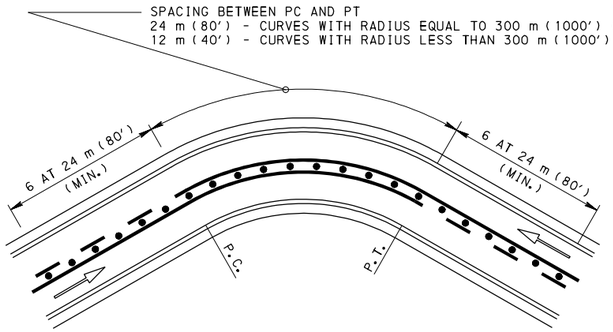

CURVES

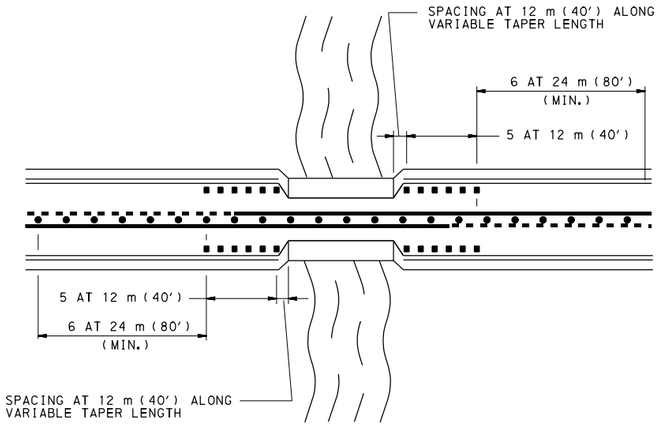

NARROW BRIDGE

ACROSS STRUCTURE USE BARRIER-MOUNT DELINEATORS

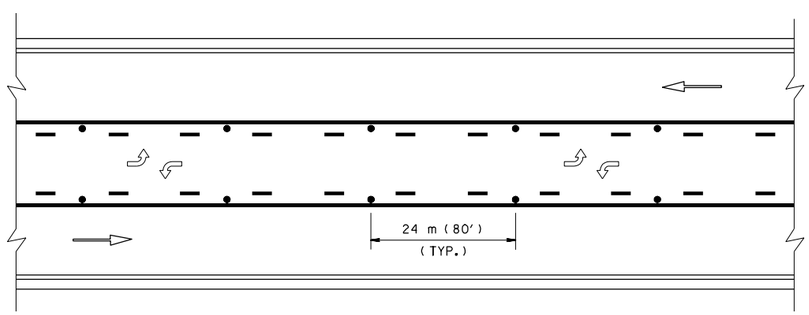

CENTER LANE LEFT-TURN ONLY

NOTES:

1. MARKERS INSTALLED AT THE DOUBLE YELLOW CENTER LINE SHALL BE PLACED BETWEEN THE TWO PAINTED LINES. MARKERS SHALL NOT BE PLACED WITHIN THE LIMITS OF THE PAINTED LINES EXCEPT WHERE LINES DEVIATE VISIBLY FROM THEIR CORRECT ALIGNMENT, AND THEN ONLY WITH THE APPROVAL OF THE ENGINEER.
2. PLACE MARKERS INSTALLED ALONG A LANE LINE (BROKEN LINE) MIDWAY BETWEEN THE PAINTED PORTION.
3. PLACE MARKERS ALONG AN EDGE OR CHANNELIZING LINE WITH THE NEAR EDGE OF THE MARKER CASTING 25 mm (1 ") MAXIMUM FROM THE NEAR EDGE OF THE PAINTED LINE.
4. SPACE MARKERS INSTALLED AT THE CENTERLINE AT 24 m (80′) UNLESS OTHERWISE SHOWN ON THE DRAWINGS. (AT LOCATIONS IDENTIFIED AS FOG AREAS OR AREAS WITH A HIGH INCIDENCE OF HEAD-ON OR SIDESWIPE ACCIDENTS, SPACE THE CENTERLINE MARKERS AT 12 m (40′)).
5. EITHER ALL METRIC OR ALL ENGLISH UNITS MUST BE USED ON PLANS. METRIC AND ENGLISH UNITS SHOWN MAY NOT BE MIXED.

LEGEND

- WHITE ONE-WAY MARKER
- YELLOW/YELLOW - TWO-WAY MARKER
- WHITE
- YELLOW
- BROKEN WHITE
- BROKEN YELLOW
- DIRECTION OF TRAVEL

COMMONWEALTH OF PENNSYLVANIA
DEPARTMENT OF TRANSPORTATION
BUREAU OF HIGHWAY SAFETY AND TRAFFIC ENGINEERING

SNOWPLOWABLE RAISED PAVEMENT MARKERS

RECOMMENDED MAY 25, 2007 Glen C Rowe CHIEF, TRAFFIC ENGINEERING AND OPERATIONS DIVISION	RECOMMENDED MAY 25, 2007 M. Patel CHIEF HIGHWAY ENGINEER	SHT. 3 OF 4 TC-8602

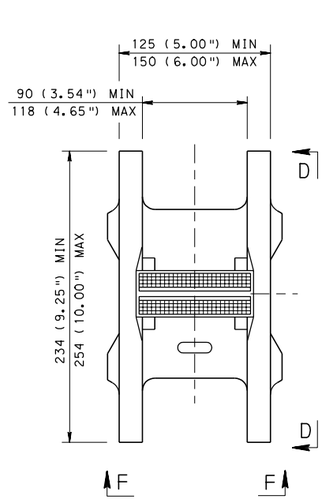

PLAN VIEW
TWO-WAY

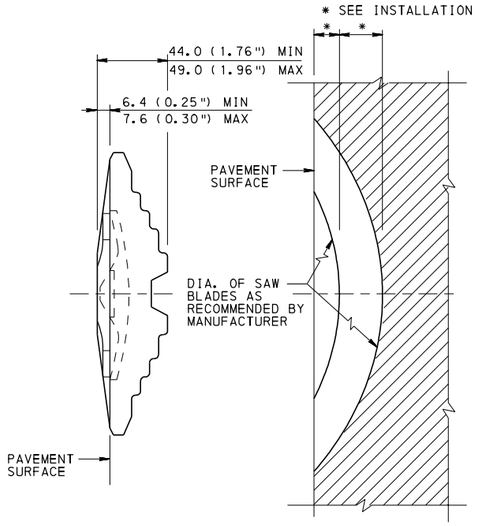

SECTION D-D

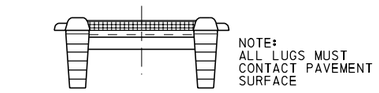

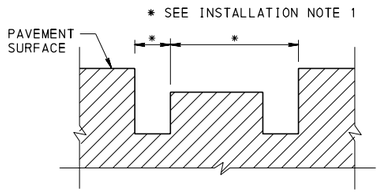

SECTION F-F

RAISED PAVEMENT MARKERS

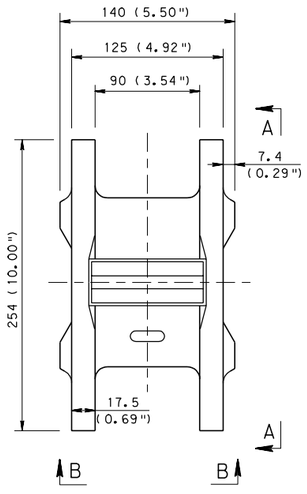

PLAN VIEW

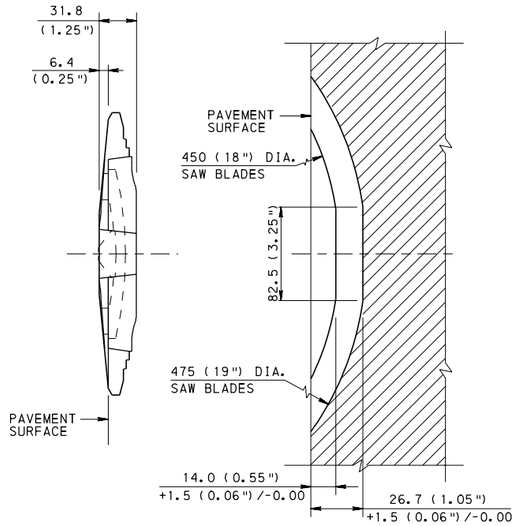

SECTION A-A

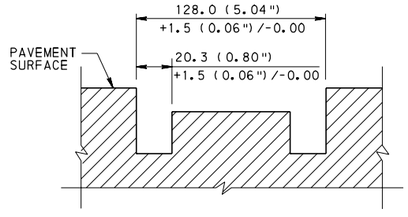

SECTION B-B

BRIDGE DECK MARKER

INSTALLATION NOTES:

1. SAW CUT TO DIMENSIONS RECOMMENDED BY MANUFACTURER.
2. INSPECT SAW CUT FOR PROPER FIT OF THE MARKER.
   - PROVIDE APPROXIMATELY 3.2 mm (0.125") CLEARANCE (SIDE-TO-SIDE MOVEMENT) FOR THE CASTING WHEN INSERTED INTO THE CUT.
   - INSTALL MARKER WITH ALL LEVELING LUGS IN CONTACT WITH THE PAVEMENT.
   - INSURE THE LEADING EDGES OF THE CASTING LIE BELOW THE PAVEMENT SURFACE.
3. SAW CUT AREAS TO BE DRY AND FREE OF MATERIAL THAT ADVERSELY AFFECTS THE ADHESIVE BOND.
4. INSTALL THE MARKERS WITH AN APPROVED TWO-COMPONENT EPOXY ADHESIVE, LISTED IN BULLETIN 15, BY FIRST FILLING THE SAW CUT TO WITHIN APPROXIMATELY 10 mm (0.375") OF PAVEMENT SURFACE AND THEN PLACING THE MARKER BY HAND INTO THE EPOXY FILLED SAW CUT. AFTER PLACEMENT OF MARKER, MAKE THE EPOXY FLUSH OR SLIGHTLY BELOW PAVEMENT SURFACE. NO EPOXY SHOULD OBSCURE OR BLOCK THE LENS.

NOTES:

1. ALL DIMENSIONS ARE IN MILLIMETERS UNLESS OTHERWISE NOTED. ENGLISH UNITS IN PARENTHESIS ( ).
2. EITHER ALL METRIC OR ALL ENGLISH UNITS MUST BE USED ON PLANS. METRIC AND ENGLISH UNITS SHOWN MAY NOT BE MIXED.

COMMONWEALTH OF PENNSYLVANIA
DEPARTMENT OF TRANSPORTATION
BUREAU OF HIGHWAY SAFETY AND TRAFFIC ENGINEERING

SNOWPLOWABLE RAISED PAVEMENT MARKERS

RECOMMENDED MAY 25, 2007
Glenn C Powe
CHIEF, TRAFFIC ENGINEERING AND OPERATIONS DIVISION

RECOMMENDED MAY 25, 2007
M. L. Patel
CHIEF HIGHWAY ENGINEER

SHT. 4 OF 4

TC-8602

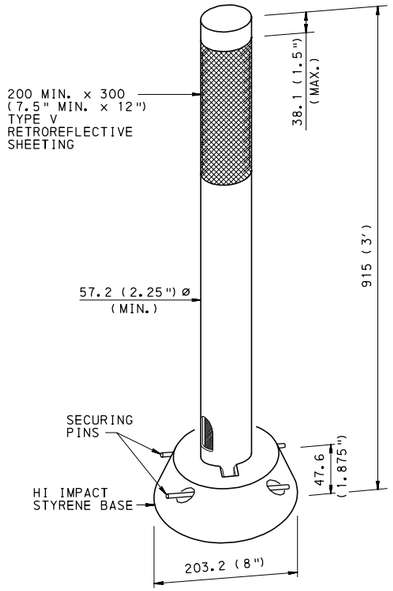

TYPE SM-1

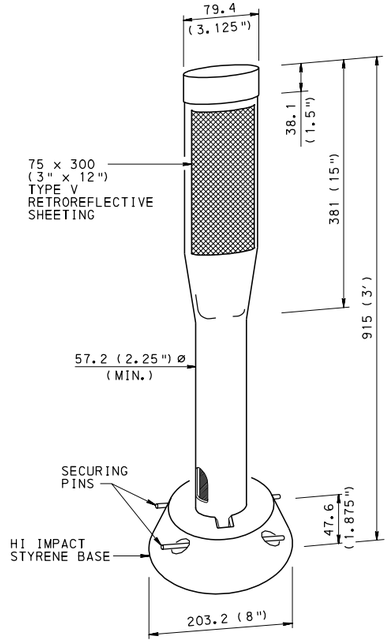

TYPE SM-2

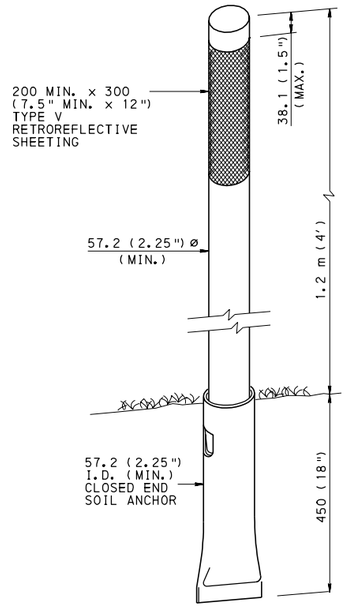

TYPE GM-1

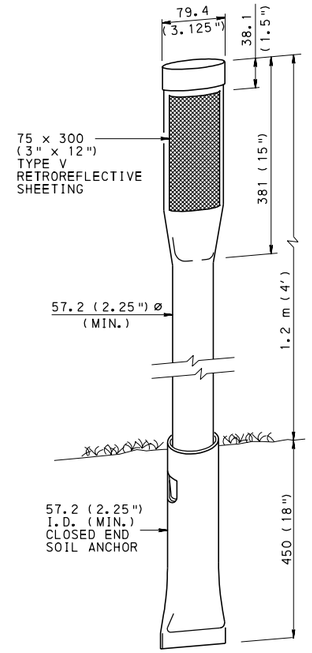

TYPE GM-2

SURFACE-MOUNTED POSTS

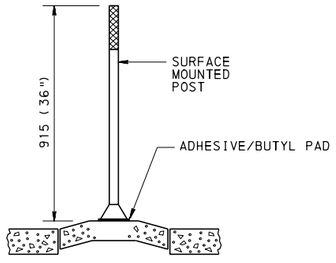

CONCRETE MEDIAN/TRAFFIC ISLAND
TYPICAL SECTION

GROUND-MOUNTED POSTS

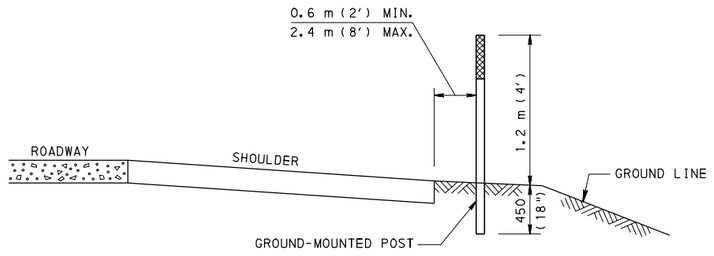

TYPICAL SECTION

PLACEMENT

NOTES:

1. USE MATERIALS AND WORKMANSHIP IN ACCORDANCE WITH PUBLICATION 408.
2. GALVANIZED METAL SOIL ANCHOR, AFTER FABRICATION, IN ACCORDANCE WITH ASTM A 123.
3. FOR GUIDE RAIL AND BARRIER DELINEATORS, SEE SHEET 2 OF 4.
4. FOR INTERCHANGE AREAS LOCATION DETAILS, SEE SHEET 3 OF 4.
5. FOR LOCATION/PLACEMENT NOTES, SEE SHEET 4 OF 4.
6. FOR DELINEATOR SPACING ON CURVES, SEE SHEET 3 OF 4.
7. USE TYPE SM-1 AND GM-1 POSTS IN AREAS WHERE TRAFFIC MOVEMENTS NEED MULTI-DIRECTION DELINEATION, SUCH AS ISLANDS, RADII AT INTERSECTIONS AND THE ENDS OF MEDIANS.
8. ALL DIMENSIONS ARE IN MILLIMETERS UNLESS OTHERWISE NOTED. ENGLISH UNITS IN PARENTHESIS ( ).
9. EITHER ALL METRIC OR ALL ENGLISH UNITS MUST BE USED ON PLANS. METRIC AND ENGLISH UNITS SHOWN MAY NOT BE MIXED.

COMMONWEALTH OF PENNSYLVANIA
DEPARTMENT OF TRANSPORTATION
BUREAU OF HIGHWAY SAFETY AND TRAFFIC ENGINEERING

DELINEATION

FLEXIBLE POSTS DETAILS

RECOMMENDED MAY 25, 2007 Glenn C. Rowe CHIEF, TRAFFIC ENGINEERING AND OPERATIONS DIVISION	RECOMMENDED MAY 25, 2007 M. L. Patel CHIEF HIGHWAY ENGINEER	SHT. 1 OF 4 TC-8604

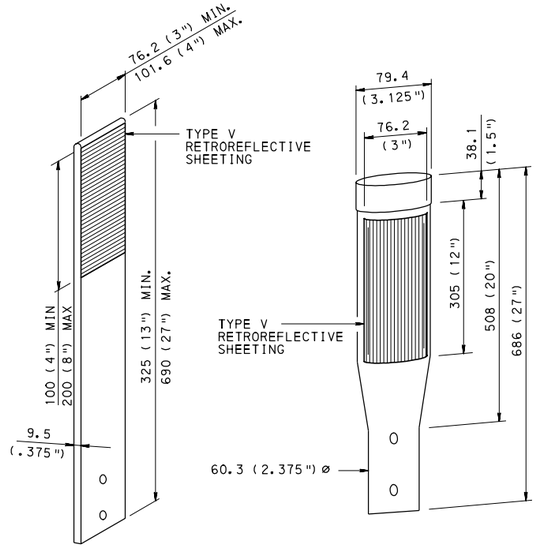

TYPE A

TYPE B

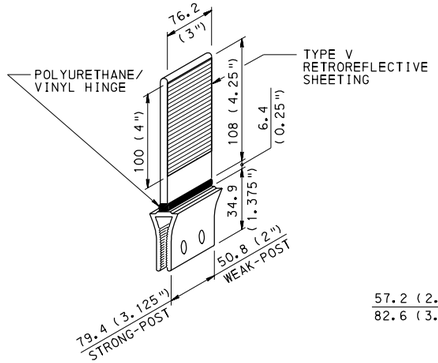

TYPE CS-STRONG POST
TYPE CW-WEAK POST

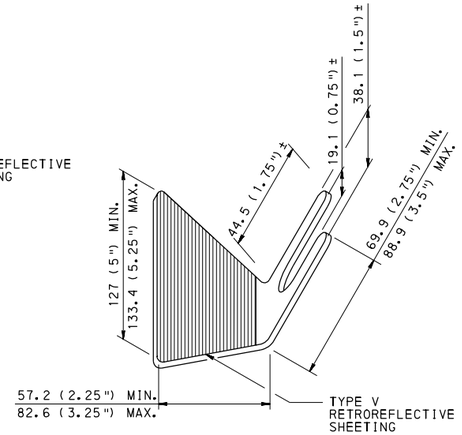

TYPE D

GUIDE-RAIL DELINEATORS

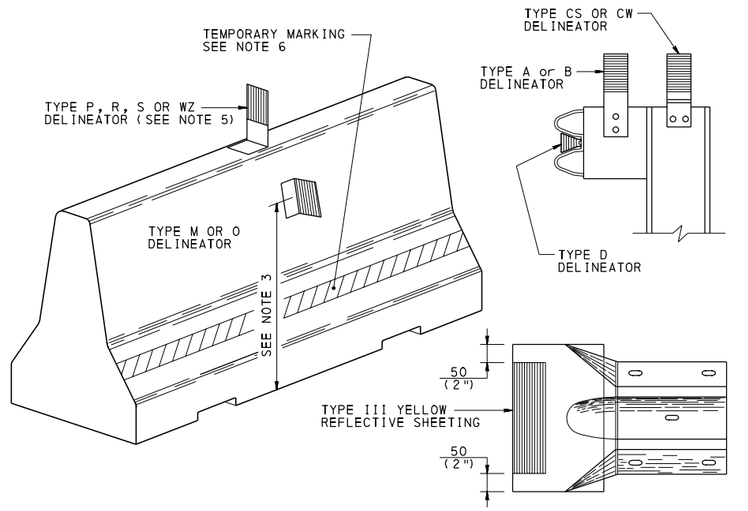

TERMINAL SECTION DETAIL

DELINEATOR PLACEMENT

1. SEE PUB. 72M, RC-52M & RC-53M FOR GUIDE RAIL DETAILS.
2. SEE PUB. 72M, RC-57M FOR CONCRETE MEDIAN BARRIER DETAILS.

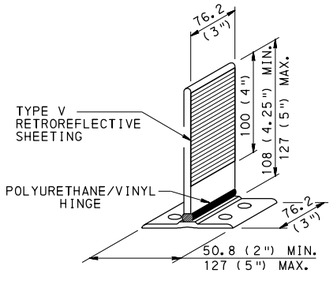

TYPE R

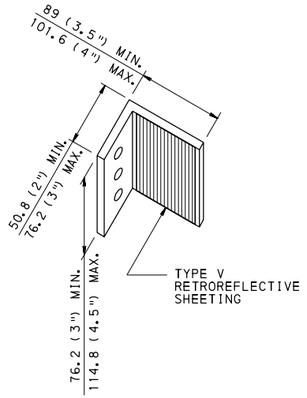

TYPE O

SIDE-MOUNT

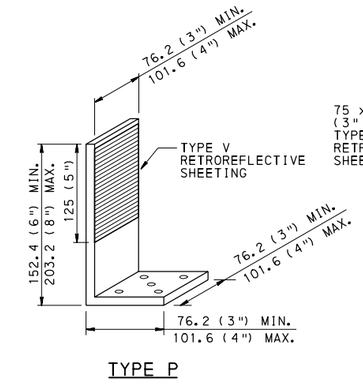

TYPE P

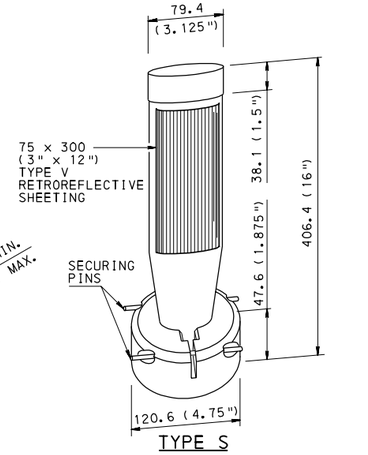

TYPE S

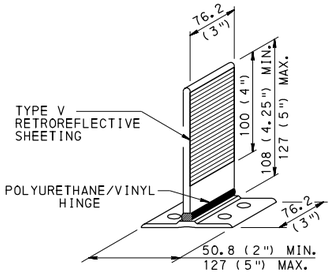

TYPE R

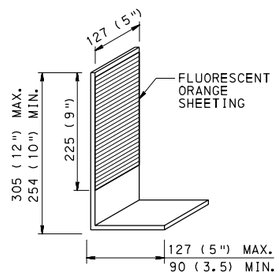

TYPE WZ

TOP-MOUNT

BARRIER DELINEATORS

NOTES:

1. USE MATERIALS AND WORKMANSHIP IN ACCORDANCE WITH PUBLICATION 408.
2. INSTALL DELINEATORS ON GUIDE RAIL AT 11.43 m (37.5') SPACING ON HORIZONTAL CURVES WITH A RADIUS LESS THAN OR EQUAL TO 305 m (1000') AND AT 22.86 m (75') SPACING ON HORIZONTAL CURVES WITH A RADIUS GREATER THAN 305 m (1000') AND TANGENTS. INSTALL 0.09 m^2 (1 FT^2) MINIMUM OF TYPE III YELLOW REFLECTIVE SHEETING ON TERMINAL SECTION END TREATMENTS.
3. SIDE-MOUNTED DELINEATORS TYPE "R" OR TYPE "O" SHALL BE LOCATED 660 mm (26") FROM THE PAVEMENT TO THE CENTER OF THE DELINEATOR. AN ADDITIONAL SIDE-MOUNTED DELINEATOR MAY BE LOCATED ON THE LOWER SLOPE OF THE BARRIER WHEN JUSTIFIED BY ENGINEERING JUDGEMENT.
4. MOUNT DELINEATORS ON THE TOP AND/OR SIDE OF BARRIERS OR BRIDGE PARAPETS AS SPECIFIED AT A MAXIMUM LONGITUDINAL SPACING OF 24 m (80') FOR TANGENT SECTIONS AND 12 m (40') FOR CURVE SECTIONS WITH A RADIUS LESS THAN 305 m (1,000').
5. IN WORK ZONES, INSTALL TYPE WZ DELINEATORS ON THE TOP OF ALL TEMPORARY BARRIERS THAT ARE ADJACENT TO TRAVEL LANES AT MAXIMUM 12 m (40') SPACING. USE FLUORESCENT ORANGE SHEETING. USE SHEETING ON BOTH SIDES OF DELINEATOR WHEN USED BETWEEN TRAFFIC TRAVELING IN OPPOSITE DIRECTIONS. TYPE WZ DELINEATORS MAY BE MADE OF ANY LIGHTWEIGHT MATERIALS THAT MAINTAIN A VERTICAL ORIENTATION (±10 DEGREES) AND DO NOT NEED TO BE OF AN APPROVED TYPE LISTED IN BULLETIN 15.
6. IN AN EFFORT TO MINIMIZE ERADICATION IN WORK ZONES, CONTINUOUS WHITE OR YELLOW 150 mm (6") WIDE PAVEMENT MARKINGS MAY BE INSTALLED AS SHOWN ON TEMPORARY BARRIER INSTEAD OF BEING PLACED ON THE ROAD SURFACE. THE LINE MAY BE ANY APPROVED PAINT OR PAVEMENT MARKING TAPE THAT SATISFIES THE MINIMUM RETROREFLECTIVITY REQUIREMENTS.
7. ALL DIMENSIONS ARE IN MILLIMETERS UNLESS OTHERWISE NOTED. ENGLISH UNITS IN PARENTHESIS ( ).
8. EITHER ALL METRIC OR ALL ENGLISH UNITS MUST BE USED ON PLANS. METRIC AND ENGLISH UNITS SHOWN MAY NOT BE MIXED.

COMMONWEALTH OF PENNSYLVANIA
DEPARTMENT OF TRANSPORTATION
BUREAU OF HIGHWAY SAFETY AND TRAFFIC ENGINEERING

DELINEATION

GUIDE RAIL AND BARRIER DETAILS

RECOMMENDED MAY 25, 2007
Glenn C Rowe
CHIEF, TRAFFIC ENGINEERING AND OPERATIONS DIVISION

RECOMMENDED MAY 25, 2007
M. C. Patel
CHIEF HIGHWAY ENGINEER

SHT. 2 OF 4

TC-8604

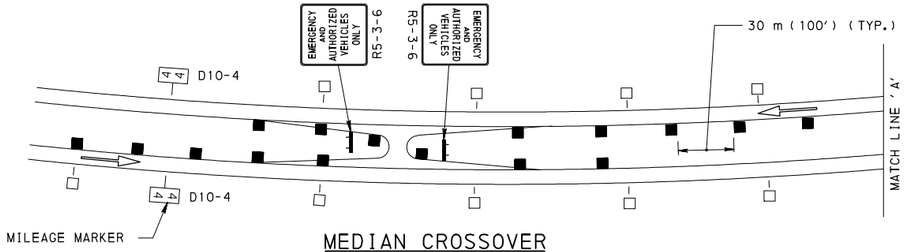

MEDIAN CROSSOVER

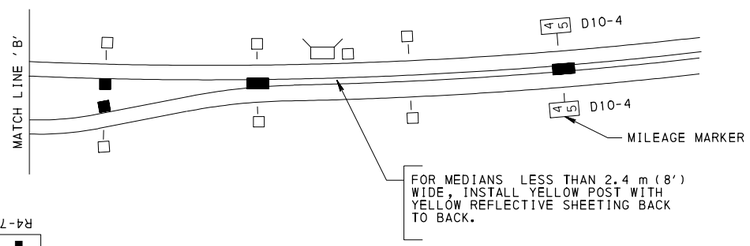

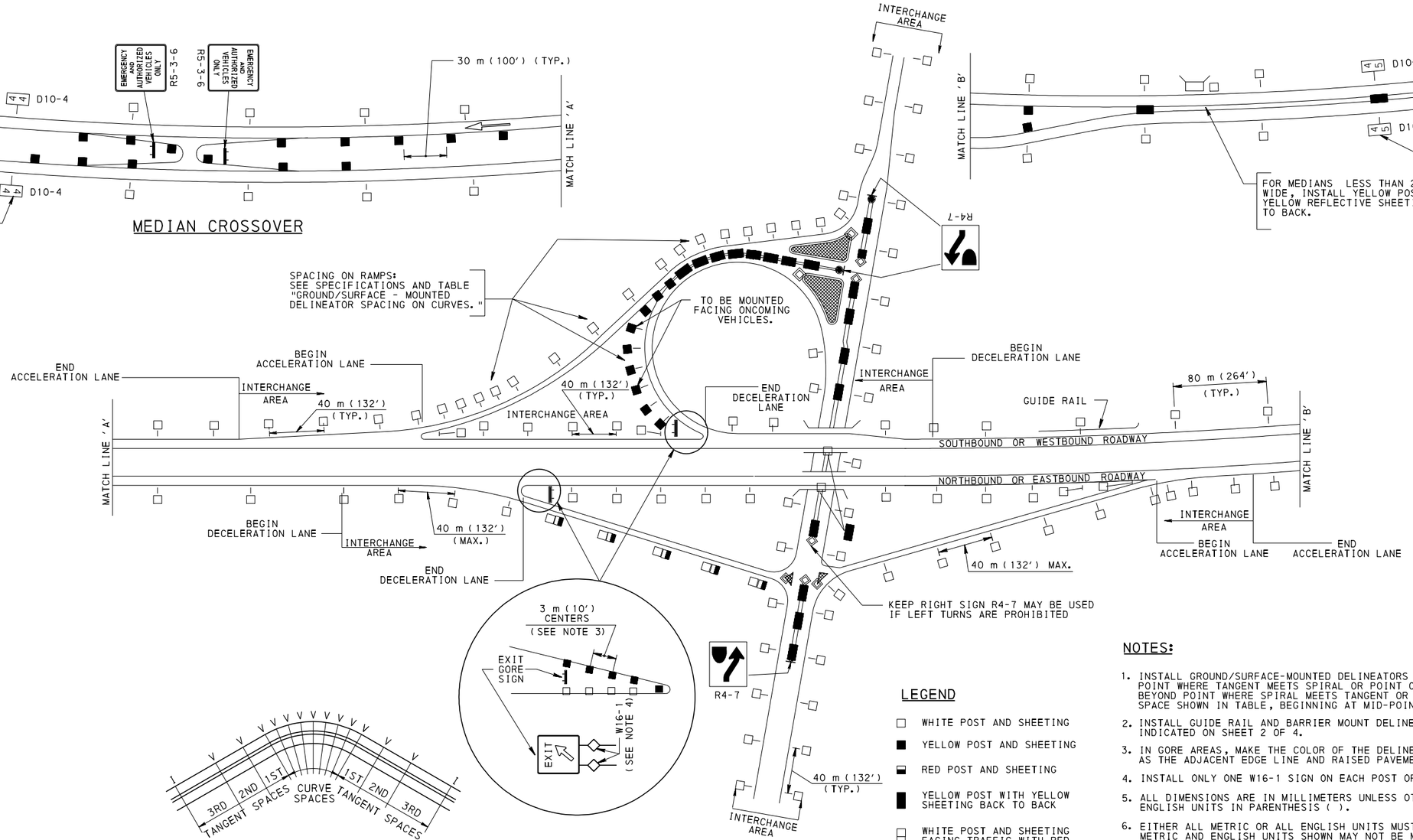

METRIC UNITS

RADIUS ON CURVE MAX. m	RADIUS ON CURVE MIN. m	SPACING ON CURVE m	SPACING IN ADVANCE OF AND BEYOND CURVES: FIRST SPACE m	SECOND SPACE m	THIRD SPACE m
2100	1651	66	80	80	80
1650	1201	60			
1200	881	54			
880	741	48			
740	601	42			
600	471	36			
470	351	30	60		
350	226	24	48		
225	101	18	36	54	72
100	51	12	24	36	54
50	30	6	12	24	48

ENGLISH UNITS

RADIUS ON CURVE MAX. FEET	RADIUS ON CURVE MIN. FEET	SPACING ON CURVE FEET	SPACING IN ADVANCE OF AND BEYOND CURVES: FIRST SPACE FEET	SECOND SPACE FEET	THIRD SPACE FEET
7000	5501	220	264	264	264
5500	4001	200			
4000	2901	180			
2900	2451	160			
2450	2001	140			
2000	1551	120			
1550	1151	100	200		
1150	751	80	160		
750	351	60	120	180	240
350	151	40	80	120	180
150	100	20	40	80	160

GROUND/SURFACE-MOUNTED
DELINEATOR SPACING ON CURVES

LEGEND

- WHITE POST AND SHEETING
- YELLOW POST AND SHEETING
- RED POST AND SHEETING
- YELLOW POST WITH YELLOW SHEETING BACK TO BACK
- WHITE POST AND SHEETING FACING TRAFFIC WITH RED SHEETING FACING WRONG-WAY MOVEMENT
- DELINEATORS LOCATED AS DIRECTED BY THE ENGINEER
- W16-1 OR YELLOW FLEXIBLE DELINEATOR POST (FOR NARROW MEDIANS)
- DIRECTION OF TRAVEL

NOTES:

1. INSTALL GROUND/SURFACE-MOUNTED DELINEATORS IN ADVANCE OF POINT WHERE TANGENT MEETS SPIRAL OR POINT OF CURVATURE AND BEYOND POINT WHERE SPIRAL MEETS TANGENT OR POINT OF TANGENCY. SPACE SHOWN IN TABLE, BEGINNING AT MID-POINT OF CURVE.
2. INSTALL GUIDE RAIL AND BARRIER MOUNT DELINEATORS AS INDICATED ON SHEET 2 OF 4.
3. IN GORE AREAS, MAKE THE COLOR OF THE DELINEATORS THE SAME, AS THE ADJACENT EDGE LINE AND RAISED PAVEMENT MARKERS.
4. INSTALL ONLY ONE W16-1 SIGN ON EACH POST OF GORE EXIT SIGN.
5. ALL DIMENSIONS ARE IN MILLIMETERS UNLESS OTHERWISE NOTED. ENGLISH UNITS IN PARENTHESIS ( ).
6. EITHER ALL METRIC OR ALL ENGLISH UNITS MUST BE USED ON PLANS. METRIC AND ENGLISH UNITS SHOWN MAY NOT BE MIXED.

COMMONWEALTH OF PENNSYLVANIA
DEPARTMENT OF TRANSPORTATION
BUREAU OF HIGHWAY SAFETY AND TRAFFIC ENGINEERING

DELINEATION

LOCATION DETAILS
INTERCHANGE AREAS

RECOMMENDED MAY 25, 2007
Glenn C Rowe
CHIEF, TRAFFIC ENGINEERING AND OPERATIONS DIVISION

RECOMMENDED MAY 25, 2007
M. G. Patel
CHIEF HIGHWAY ENGINEER

SHT. 3 OF 4

TC-8604

1. LOCATION:

A. LIGHTED THROUGH ROADWAYS - DO NOT PLACE DELINEATORS ON THE THROUGH ROADWAY BETWEEN INTERCHANGES WHERE FIXED SOURCE LIGHTING IS INSTALLED UNLESS OTHERWISE SPECIFIED.

B. UNLIGHTED THROUGH ROADWAYS - ON ROADWAYS WITHOUT FIXED SOURCE LIGHTING, CONTINUOUSLY PLACE DELINEATORS ALONG THE RIGHT SIDE OF THE THROUGH ROADWAYS. PLACE DELINEATORS ON THE LEFT SIDE OF THROUGH ROADWAYS AT THE FOLLOWING LOCATIONS:

I. WHERE GUIDE RAIL OR CONCRETE BARRIER IS LOCATED ON THE LEFT WITHIN 1.8 m (6') OF THE EDGE OF SHOULDER.

II. ALONG RIGHT-HAND HORIZONTAL CURVES WITH A RADIUS OF 600 m (2000') OR LESS.

III. ALONG COMBINATIONS OF OVER-VERTICALS AND RIGHT-HAND HORIZONTAL CURVES WITH A RADIUS LESS THAN 880 m (2900').

IV. ON THE APPROACH AND THROUGHOUT LEFT LANE DROPS OR PAVEMENT WIDTH TRANSITIONS.

V. WITHIN THE LIMITS OF MEDIAN CROSSOVERS (AS SHOWN ON SHEET 3 OF 4).

VI. WITHIN THE LIMITS OF VARIABLE MEDIAN WIDTHS (AS SHOWN ON SHEET 3 OF 4).

VII. ALONG PAVED MEDIANS WITH CURBING.

C. INTERCHANGE AREAS - PLACE DELINEATORS ALONG THE RIGHT SIDE IN ALL INTERCHANGE AREAS AND ALONG THE LEFT SIDE WITHIN THE LIMITS OF ALL LEFT-HAND RAMPS. PLACE DELINEATORS ALONG ACCELERATION, DECELERATION AND SPEED CHANGE LANES; ALONG THE RIGHT SIDE OF THE THROUGH ROADWAY AND ALONG THE OUTSIDE OR BOTH SIDES AS SPECIFIED ON ALL RAMPS.

D. BRIDGE PARAPETS - PLACE DELINEATORS ON PARAPETS OF ALL BRIDGES WHERE RPMs ARE USED ON APPROACH ROADWAY.

E. SPECIAL PURPOSE DELINEATION - PLACE OBJECT AND CLEARANCE MARKER GROUP (W16 SERIES) ALONG THE THROUGH ROADWAY AND WITHIN THE INTERCHANGE AREA AS SPECIFIED IN ADDITION TO THE ABOVE SPECIFIED DELINEATORS.

F. MAINTENANCE MARKERS - PLACE ONE RED FLEXIBLE DELINEATOR POST ADJACENT TO NEAR EDGE OF MAINTENANCE APPURTENANCE (END PIPE, END WALL, INLET, ETC....). MATCH REFLECTIVE SHEETING COLOR WITH THE NEAREST PAVEMENT MARKING EDGE LINE COLOR.

2. LONGITUDINAL SPACING:

A. RIGHT SIDE OF THROUGH ROADWAYS - INSTALL DELINEATORS AT 80 m (264') EXCEPT IN INTERCHANGE AREAS WITH RIGHT-HAND RAMPS, ACCELERATION OR DECELERATION LANES AND ALONG HORIZONAL CURVES.

B. LEFT SIDE OF THROUGH ROADWAYS - WHEN REQUIRED, INSTALL DELINEATORS AT 80 m (264') EXCEPT IN INTERCHANGE AREAS WITH LEFT-HAND RAMPS, ACCELERATION OR DECELERATION LANES, ON MEDIAN BARRIERS AND ALONG HORIZONTAL CURVES.

C. INTERCHANGE AREAS - SPACE DELINEATORS IN INTERCHANGE AREA AT 40 m (132').

D. HORIZONTAL CURVES - SPACE DELINEATORS AS INDICATED IN THE TABLE "GROUND/SURFACE-MOUNTED DELINEATOR SPACING ON CURVES," SEE SHEET 3 OF 4.

E. EXIT GORES, CHANNELIZING ISLANDS AND RAMP TERMINALS - THE DESIGN VARIES SUFFICIENTLY AT THESE LOCATIONS MAKING TYPICAL SPACING UNAVAILABLE FOR EVERY SITUATION. DETERMINE DELINEATOR SPACING AND APPLICATION ON SITE AND AS DIRECTED BY THE ENGINEER. HOWEVER, USE A MINIMUM SPACING OF 6 m (20') EXCEPT AS INDICATED.

F. SPECIAL PURPOSE DELINEATION - PLACE SPECIAL PURPOSE DELINEATION (W16 SERIES) ALONG THE ROADWAY WITHOUT REGARD TO LONGITUDINAL SPACING. SPACE DELINEATION ON MEDIAN BARRIERS IN ACCORDANCE WITH NOTE 4 ON SHEET 2 OF 4.

G. MEDIAN CROSSOVERS - PLACE DELINEATORS AT 30 m (100') SPACING AS INDICATED ON SHEET 3 OF 4 WITH A MINIMUM OF FIVE DELINEATORS ON THE APPROACH TO THE CROSSOVER AND THREE DELINEATORS BEYOND THE CROSSOVER.

H. MAINTENANCE MARKERS - PLACE MAINTENANCE MARKERS ALONG THE ROADWAY WITHOUT REGARD TO LONGITUDINAL SPACING.

3. VERTICAL PLACEMENT:

INSTALL DELINEATORS THAT THE TOPS ARE APPROXIMATELY 1.2 m (4') ABOVE THE GROUND. INSTALL ON CONCRETE BARRIERS OR GUIDE RAIL AS INDICATED ON SHEET 2 OF 4.

4. LATERAL PLACEMENT:

A. NO GUIDE RAIL - INSTALL DELINEATORS 0.6 m (2') TO 2.4 m (8') BEHIND THE OUTER EDGE OF THE SHOULDER, OR AS DIRECTED.

B. GUIDE RAIL - INSTALL DELINEATORS IN THE WEB OF GUIDE RAIL OR ON GUIDE RAIL POSTS, AS INDICATED ON SHEET 2 OF 4, IF THE GUIDE RAIL IS LESS THAN 2.4 m (8') FROM THE OUTER EDGE OF SHOULDER. DO NOT USE GROUND-MOUNTED DELINEATORS IN AREAS WITH GUIDE RAIL. IF THE GUIDE RAIL IS MORE THAN 2.4 m (8') FROM THE OUTER EDGE OF THE SHOULDER, INSTALL DELINEATORS AS SPECIFIED IN NOTE 4.A.

C. CURB IN PLACE - INSTALL DELINEATORS IMMEDIATELY BEHIND CURB PROVIDED PLACEMENT WILL NOT EXCEED 2.4 m (8') BEHIND THE EDGE OF SHOULDER. IF THE CURB IS MORE THAN 2.4 m (8') FROM THE EDGE OF SHOULDER, INSTALL DELINEATORS AS SPECIFIED IN NOTE 4.A.

D. OBSTRUCTION MARKERS - INSTALL OBSTRUCTION MARKER DELINEATORS ADJACENT TO NEAR EDGE OF THE OBSTRUCTION.

E. MAINTENANCE MARKERS - INSTALL MARKERS ADJACENT TO NEAR EDGE OF THE APPURTENANCE (END PIPE, END WALL, INLET, ETC....).

5. TYPES OF DELINEATOR:

A. WHITE DELINEATORS - PLACE ON RIGHT SIDE OF THROUGH ROADWAYS, ALONG RIGHT-HAND ACCELERATION, DECELERATION AND SPEED-CHANGE LANES, RAMPS AND ON CHANNELIZING OR DIVISIONAL ISLANDS WHERE TRAFFIC IN THE SAME DIRECTION MAY PROCEED ON BOTH SIDES OF THE ISLAND.

B. YELLOW DELINEATORS - PLACE ON LEFT SIDE OF THROUGH ROADWAYS, RAMPS AND ON CHANNELIZING OR DIVISONAL ISLANDS WHERE TRAFFIC IN THE SAME DIRECTION TRAVELS TO THE RIGHT OF THE ISLAND AND ALONG LEFT-HAND ACCELERATION, DECELERATION AND SPEED CHANGE LANES AND ON FAR SIDE OF MEDIAN CROSSOVERS. ALSO AT EDGE OF OBSTRUCTIONS ADJACENT TO THE ROADWAY AND AT POINT WHERE GUIDE RAIL BECOMES TANGENT TO THE ROADWAY.

C. RED DELINEATORS - PLACE ON RIGHT, LEFT, OR BOTH SIDES OF ROADWAYS OR RAMPS TO INDICATE WRONG-WAY MOVEMENT. ALSO PLACE ON BOTH SIDES OF RUN-AWAY TRUCK ESCAPE RAMPS.

D. SPECIAL PURPOSE DELINEATOR (W16-1) MARKERS - PLACE MARKERS AT LOCATIONS SHOWN ON SHEET 3 OF 4.

E. MAINTENANCE MARKERS - PLACE RED POST WITH WHITE REFLECTIVE SHEETING ON RIGHT SIDE OF THROUGH HIGHWAY. PLACE RED POST WITH YELLOW REFLECTIVE SHEETING ON LEFT SIDE OF THROUGH HIGHWAY.

NOTES:

1. MAINTENANCE MARKERS ARE RED FLEXIBLE DELINEATOR POSTS INSTALLED TO CALL OUT THE LOCATION OF END PIPES, END WALLS, INLETS, ETC... FOR MAINTENANCE PURPOSES ONLY. ANY MAINTENANCE APPURTENANCE WITHIN OR ADJACENT TO THE ROADWAY THAT IS DEEMED A HAZARD SHOULD BE REMOVED, MODIFIED OR DELINEATED AS SUCH.
2. EITHER ALL METRIC OR ALL ENGLISH UNITS MUST BE USED ON PLANS. METRIC AND ENGLISH UNITS SHOWN MAY NOT BE MIXED.

COMMONWEALTH OF PENNSYLVANIA
DEPARTMENT OF TRANSPORTATION
BUREAU OF HIGHWAY SAFETY AND TRAFFIC ENGINEERING

DELINEATION AND MARKERS

LOCATION / PLACEMENT NOTES

RECOMMENDED MAY 25, 2007 Glen C. Rowe CHIEF, TRAFFIC ENGINEERING AND OPERATIONS DIVISION	RECOMMENDED MAY 25, 2007 M. Patel CHIEF HIGHWAY ENGINEER	SHT. 4 OF 4 TC-8604

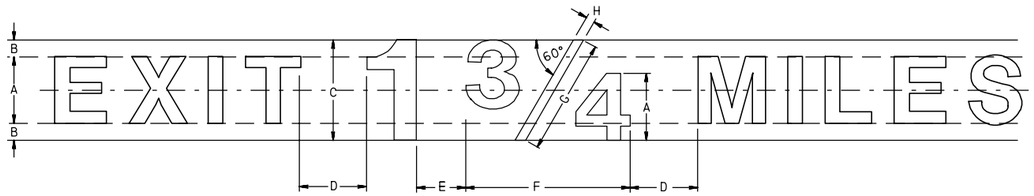

NOTES:

1. DIAGONAL OF FRACTION TO BE CENTERED OPTICALLY.
2. WHEN THE NUMERATOR OF A FRACTION IS 1 (ONE), USE 2.2 x A. FOR ALL OTHER NUMERATORS, USE 2.5 x A.

SIZE OF THE FRACTION RECTANGLE IS DETERMINED AS FOLLOWS:

SYMBOL	TITLE	RATIO TO HEIGHT OF UPPER CASE
A	LETTER HEIGHT	1.0 x UPPER CASE
B	SPACE TO TOP OR BOTTOM OF RECTANGLE	0.25 x A
C	HEIGHT OF RECTANGLE	1.5 x A
D	SPACE TO NEXT CHARACTER	1.5 x A
E	SPACE FROM WHOLE NUMBER TO A FRACTION OR DECIMAL POINT	0.75 x A
F	WIDTH OF RECTANGLE	SEE NOTE 2
G	LENGTH OF DIAGONAL	1.7 x A
H	THICKNESS OF DIAGONAL	LETTER STROKE WIDTH

SIZE AND SPACING OF FRACTIONS
(EXCEPT SEE SHEET 5 OF 8 OF TC-8701D FOR FRACTIONS ON LINES WITH UPPER/LOWER CASE LEGEND)

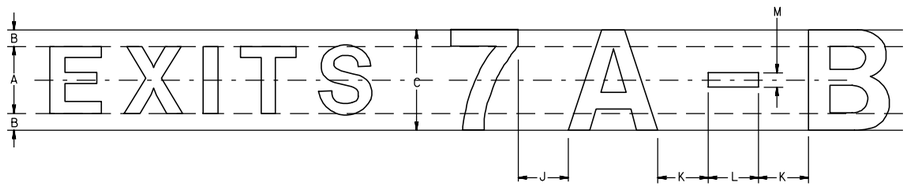

NOTE:

THE DASH IS TO BE CENTERED OPTICALLY.

SIZE AND SPACING OF DASHES ARE DETERMINED AS FOLLOWS:

SYMBOL	TITLE	RATIO TO HEIGHT OF UPPER CASE
A	LETTER HEIGHT	1.0 x UPPER CASE
B	SPACE TO TOP OR BOTTOM OF RECTANGLE	0.25 x A
C	HEIGHT OF RECTANGLE	1.5 x A
J	SPACE FROM NUMBER TO A CHARACTER	0.75 x A
K	SPACE FROM DASH TO A CHARACTER	0.75 x A
L	LENGTH OF DASH	0.75 x A
M	THICKNESS OF DASH	STROKE WIDTH

SIZE AND SPACING OF DASHES

HOW TO USE THE SPACING CHARTS ON THE FOLLOWING SHEETS:

a. SELECT THE PROPER CHART FROM SHEETS 2 THROUGH 17. (FOR LETTER AND NUMERAL SIZES WHERE A SPACING CHART HAS NOT BEEN PROVIDED, USE ONE OR MORE OF THE EXISTING CHARTS TO DETERMINE PROPER SPACING. FOR EXAMPLE, FOR 375 mm (15") SERIES E NUMERALS, USE 1.5 TIMES THE VALUES SHOWN FOR 250 mm (10") SERIES E NUMERALS.)

b. IN THE LEFT-HAND VERTICAL COLUMN, LOCATE THE FIRST LETTER OF THE WORD BEING SPACED.

c. LOCATE THE NEXT LETTER OF THE WORD BEING SPACED IN THE TOP HORIZONTAL COLUMN.

d. THE FIGURE AT THE INTERSECTION OF THE TWO COLUMNS IS THE TOTAL WIDTH IN MILLIMETERS (INCHES) OF THE FIRST LETTER PLUS THE SPACE TO THE LEFT EDGE OF THE NEXT LETTER.

e. TO COMPUTE THE LENGTH OF A WORD, ADD THE FIGURES OBTAINED BY REPEATING STEPS a, b, c AND d FOR EACH SUCCESSIVE LETTER PLUS THE LETTER WIDTH ONLY OF THE LAST LETTER. SEE EXAMPLES. (THE LETTER WIDTHS ARE GIVEN IN THE EXTREME LEFT-HAND COLUMN OF EACH CHART.)

f. THE MINIMUM SPACING BETWEEN WORDS IN THE SAME LINE SHOULD BE THE HEIGHT OF THE UPPER CASE LETTER USED IN THAT LINE.

EXAMPLES

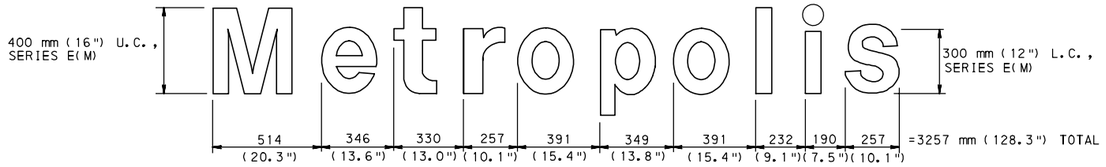

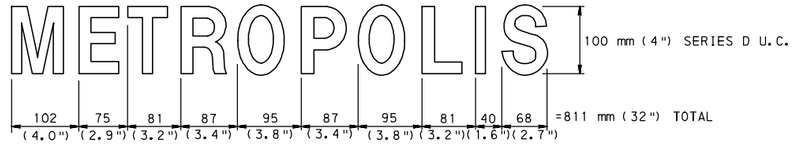

NOTES:

1. SEE TC-8701D FOR SIGN LAYOUT DETAILS FOR FREEWAY AND EXPRESSWAY SIGNS.
2. TO DETERMINE THE PROPER SIZE, SERIES AND TYPE OF LEGEND TO BE USED, SEE THE MANUAL ON UNIFORM TRAFFIC CONTROL DEVICES (MUTCD) AND TC-8701D.
3. ALL DIMENSIONS ARE IN MILLIMETERS UNLESS OTHERWISE NOTED. ENGLISH UNITS IN PARENTHESIS ( ).
4. EITHER ALL METRIC OR ALL ENGLISH UNITS MUST BE USED ON PLANS. METRIC AND ENGLISH UNITS SHOWN MAY NOT BE MIXED.

COMMONWEALTH OF PENNSYLVANIA
DEPARTMENT OF TRANSPORTATION
BUREAU OF HIGHWAY SAFETY AND TRAFFIC ENGINEERING

SPACING CHARTS
DIRECT APPLIED LETTERS & NUMERALS

GENERAL INFORMATION

RECOMMENDED MAY 25, 2007 Glenn C Rowe CHIEF, TRAFFIC ENGINEERING AND OPERATIONS DIVISION	RECOMMENDED MAY 25, 2007 M. C. Patel CHIEF HIGHWAY ENGINEER	SHT. 1 OF 18 TC-8700C

600 mm UPPER CASE to 450 mm lower case

450 / 600		385	389	400	389	114	385	114	643	389	298	389	247	602	214	385	305	454	492	473	400
		a	c	d	e	g	o	q	b	h	i	k	l	m	n	p	r	u	f	w	j	s	t	v	y	x	z
610	A		755						770										743	701	724	706	724	759		
486	B		658						703										646	600	642	619	619	661		
486	C		646						684										635	593	631		638	654		
486	D		642						691										638	584	631		638	646		
446	E		606						644										595	553	591		598	614		
446	F		523						598										542	523	530		537	560		
486	G		646						684										635	593	631		638	654		
486	H		696						733										684	646	680		691	700		
120	I		330						367										318	280	314		325	334		
456	J		661						673										650	612	638		647	666		
494	K		616						676										608	566	604		612	627		
446	L		568						628										560	518	556		564	579		
562	M		772						809										760	722	756		767	776		
486	N		696						733										684	646	680		691	700		
504	O		660						709										656	602	649		656	664		
486	P		635						658										623	563	608		619	631		
504	Q		660						709										656	602	649		656	664		
486	R		642						691										638	584	631		638	646		
486	S		631						680										619	582	616		623	635		
446	T		560						628										553	530	560		568	579		
486	U		691						703										680	642	668		677	696		
552	V		659						724										666	643	682		689	701		
638	W		783						798										771	729	752	734	752	787		
526	X		671						686										659	617	640	622	640	675		
610	Y		687						762										706	678	682		694	732		
486	Z		677						714										673	619	668		677	684		

500 mm UPPER CASE to 375 mm lower case

375 / 500		321	324	333	324	95	321	95	536	324	248	324	206	502	178	321	254	378	410	394	333
		a	c	d	e	g	o	q	b	h	i	k	l	m	n	p	r	u	f	w	j	s	t	v	y	x	z
508	A		629						641										619	584	603	588	603	632		
405	B		548						586										538	500	535	516	516	551		
405	C		538						570										529	494	526		532	545		
405	D		535						576										532	487	526		532	538		
372	E		505						537										496	461	493		499	512		
372	F		436						499										452	436	442		448	467		
405	G		538						570										529	494	526		532	545		
405	H		580						611										570	538	567		576	583		
100	I		275						306										265	233	262		271	278		
380	J		551						561										542	510	532		539	555		
412	K		514						564										507	472	504		510	523		
372	L		474						524										467	432	464		470	483		
468	M		643						674										633	601	630		639	646		
405	N		580						611										570	538	567		576	583		
420	O		550						591										547	502	541		547	553		
405	P		529						548										519	469	507		516	526		
420	Q		550						591										547	502	541		547	553		
405	R		535						576										532	487	526		532	538		
405	S		526						567										516	485	513		519	529		
372	T		467						524										461	442	467		474	483		
405	U		576						586										567	535	557		564	580		
460	V		549						603										555	536	568		574	584		
532	W		653						665										643	608	627	612	627	656		
438	X		559						571										549	514	533	518	533	562		
508	Y		572						635										588	565	568		578	610		
405	Z		564						595										561	516	557		564	570		

400 mm UPPER CASE to 300 mm lower case

300 / 400		257	260	267	260	76	257	76	429	260	197	260	165	400	143	257	203	302	327	314	267
		a	c	d	e	g	o	q	b	h	i	k	l	m	n	p	r	u	f	w	j	s	t	v	y	x	z
406	A		501						514										495	466	482	470	482	504		
324	B		438						470										432	400	429	413	413	442		
324	C		432						457										422	394	419		426	435		
324	D		429						461										426	391	419		426	432		
298	E		406						431										396	368	393		400	409		
298	F		349						400										362	349	355		358	374		
324	G		432						457										422	394	419		426	435		
324	H		464						489										457	432	454		461	467		
80	I		220						245										213	188	210		217	223		
304	J		441						450										434	409	425		431	444		
330	K		412						451										406	378	403		410	419		
298	L		380						419										374	346	371		378	387		
374	M		514						539										507	482	504		511	517		
324	N		464						489										457	432	454		461	467		
336	O		441						473										438	403	431		438	444		
324	P		422						438										416	375	406		413	419		
336	Q		441						473										438	403	431		438	444		
324	R		429						461										426	391	419		426	432		
324	S		419						454										413	388	410		416	422		
298	T		374						419										368	355	374		380	387		
324	U		461						470										454	429	445		451	464		
368	V		438						482										444	428	454		460	466		
426	W		521						534										515	486	502	490	502	524		
350	X		445						458										439	410	426	414	426	448		
406	Y		457						508										470	450	454		463	488		
324	Z		451						476										448	413	445		451	457		

450 mm lower case to 450 mm lower case

450		385	389	400	389	114	385	114	643	389	298	389	247	602	214	385	305	454	492	473	400
		a	c	d	e	g	o	q	b	h	i	k	l	m	n	p	r	u	f	w	j	s	t	v	y	x	z
385	a		572						618										560	518	557		567	576		
389	b		522						576										511	469	507		519	526		
385	c		530						576										518	476	515		522	534		
389	d		576						622										564	522	561		571	580		
389	e		534						580										522	480	519		526	538		
247	f		380						434										369	327	365		377	384		
389	g		576						622										564	522	561		571	580		
389	h		576						622										564	522	561		571	580		
114	i		301						347										289	247	286		296	305		
214	j		401						447										389	347	386		396	405		
385	k		518						572										507	465	503		515	522		
114	l		301						347										289	247	286		296	305		
643	m		830						876										818	776	815		825	834		
389	n		576						622										564	522	561		571	580		
400	o		533						587										522	480	518		530	537		
389	p		522						576										511	469	507		519	526		
389	q		576						622										564	522	561		571	580		
298	r		389						443										382	336	375		382	394		
385	s		518						572										507	465	503		515	522		
305	t		442						496										435	389	427		438	450		
389	u		576						622										564	522	561		571	580		
454	v		572						626										564	522	561		568	576		
602	w		724						774										716	674	712		720	732		
473	x		603						648										591	550	587		595	606		
492	y		610						664										602	560	599		606	614		
400	z		537						591										530	484	522		533	545		

375 mm lower case to 375 mm lower case

375		321	324	333	324	95	321	95	536	324	248	324	206	502	178	321	254	378	410	394	333
		a	c	d	e	g	o	q	b	h	i	k	l	m	n	p	r	u	f	w	j	s	t	v	y	x	z
321	a		477						515										467	432	464		473	480		
324	b		435						480										426	391	422		432	438		
321	c		442						480										432	397	429		435	445		
324	d		480						518										470	435	467		476	483		
324	e		445						483										435	400	432		438	448		
206	f		317						362										308	273	304		314	320		
324	g		480						518										470	435	467		476	483		
324	h		480						518										470	435	467		476	483		
95	i		251						289										241	206	238		247	254		
178	j		334						372										324	289	321		330	337		
321	k		432						477										423	388	419		429	435		
95	l		251						289										241	206	238		247	254		
536	m		692						730										682	647	679		688	695		
324	n		480						518										470	435	467		476	483		
333	o		444						489										435	400	431		441	447		
324	p		435						480										426	391	422		432	438		
324	q		480						518										470	435	467		476	483		
248	r		324						369										318	280	312		318	328		
321	s		432						477										423	388	419		429	435		
254	t		368						413										362	324	356		365	375		
324	u		480						518										470	435	467		476	483		
378	v		476						521										470	435	467		473	480		
502	w		604						645										597	562	594		600	610		
394	x		502						540										492	458	489		496	505		
410	y		508						553										502	467	499		505	512		
333	z		447						492										441	403	435		444	454		

300 mm lower case to 300 mm lower case

300		257	260	267	260	76	257	76	429	260	197	260	165	400	143	257	203	302	327	314	267
		a	c	d	e	g	o	q	b	h	i	k	l	m	n	p	r	u	f	w	j	s	t	v	y	x	z
257	a		381						413										375	346	371		378	384		
260	b		349						384										342	314	340		346	352		
257	c		352						384										346	317	343		349	355		
260	d		384						416										378	349	374		381	387		
260	e		355						387										349	320	346		352	358		
165	f		254						289										247	219	245		251	257		
260	g		384						416										378	349	374		381	387		
260	h		384						416										378	349	374		381	387		
76	i		200						232										194	165	190		197	203		
143	j		267						299										261	232	257		264	270		
257	k		346						381										339	311	337		343	349		
76	l		200						232										194	165	190		197	203		
429	m		553						585										547	518	543		550	556		
260	n		384						416										378	349	374		381	387		
267	o		356						391										349	321	347		353	359		
260	p		349						384										342	314	340		346	352		
260	q		384						416										378	349	374		381	387		
197	r		257						292										254	222	248		254	261		
257	s		346						381										339	311	337		343	349		
203	t		295						330										289	260	285		292	298		
260	u		384						416										378	349	374		381	387		
302	v		382						416										375	346	372		378	384		
400	w		483						514										476	448	473		480	486		
314	x		400						432										394	365	390		396	403		
327	y		407						441										400	371	397		403	409		
267	z		359						394										353	324	349		356	362		

600 mm DIGIT to 600 mm DIGIT

600		504	486					192	486	562	486
		0	2	3	6	8	9	1	5	4	7
504	0		630					660		630	
192	1		348					348		318	
486	2		612					642		612	
486	3		612					642		612	
562	4		688					688		604	
486	5		612					642		612	
486	6		612					642		612	
486	7		612					612		528	
486	8		612					642		612	
486	9		612					642		612	

500 mm DIGIT to 500 mm DIGIT

500		420	405					160	405	468	405
		0	2	3	6	8	9	1	5	4	7
420	0		525					550		525	
160	1		290					290		265	
405	2		510					535		510	
405	3		510					535		510	
468	4		573					573		503	
405	5		510					535		510	
405	6		510					535		510	
405	7		510					510		440	
405	8		510					535		510	
405	9		510					535		510	

400 mm DIGIT to 400 mm DIGIT

400		336	324					120	324	374	324
		0	2	3	6	8	9	1	5	4	7
336	0		420					440		420	
120	1		224					224		204	
324	2		408					428		408	
324	3		408					428		408	
374	4		458					458		402	
324	5		408					428		408	
324	6		408					428		408	
324	7		408					408		352	
324	8		408					428		408	
324	9		408					428		408	

NOTE:

ALL DIMENSIONS ARE IN MILLIMETERS UNLESS OTHERWISE NOTED. SEE SHEETS 12 THROUGH 17 FOR CORRESPONDING ENGLISH UNITS.

METRIC UNITS

COMMONWEALTH OF PENNSYLVANIA
DEPARTMENT OF TRANSPORTATION
BUREAU OF HIGHWAY SAFETY AND TRAFFIC ENGINEERING

SPACING CHARTS
DIRECT APPLIED LETTERS & NUMERALS

UPPER CASE & LOWER CASE
SERIES E MODIFIED (METRIC)

RECOMMENDED MAY 25, 2007
Glenn C Rowe
CHIEF, TRAFFIC ENGINEERING AND OPERATIONS DIVISION

RECOMMENDED MAY 25, 2007
M. C. Patel
CHIEF HIGHWAY ENGINEER

SHT. 2 OF 18

TC-8700C

330 mm UPPER CASE to 250 mm lower case

250 / 330		213	216	219	216	64	213	64	359	216	165	216	140	333	117	213	168	254	273	264	219
		a	c	d	e	g	o	q	b	h	i	k	l	m	n	p	r	u	f	w	j	s	t	v	y	x	z
338	A	418			427								411	389	402	392	402	420									
270	B	365			391								359	334	359	343	343	368									
270	C	359			381								352	327	350		356	362									
270	D	359			384								356	327	350		356	359									
248	E	337			359								330	305	328		334	340									
248	F	289			334								302	289	296		299	312									
270	G	359			381								352	327	350		356	362									
270	H	388			407								381	359	378		384	391									
66	I	184			203								177	155	174		180	187									
253	J	367			374								361	342	355		358	371									
275	K	345			377								339	316	335		342	348									
248	L	318			350								312	289	308		315	321									
312	M	430			449								423	401	420		426	433									
270	N	388			407								381	359	378		384	391									
280	O	369			394								366	337	360		366	369									
270	P	352			365								346	311	340		343	350									
280	Q	369			394								366	337	360		366	369									
270	R	359			384								356	327	350		356	359									
270	S	350			378								343	324	343		346	352									
248	T	312			350								305	296	312		318	321									
270	U	384			391								378	359	372		375	388									
307	V	364			402								371	358	380		383	389									
355	W	435			444								428	406	419	409	419	437									
292	X	372			381								365	343	356	346	356	374									
338	Y	379			424								392	376	379		386	408									
270	Z	375			397								372	343	372		375	381									

265 mm UPPER CASE to 200 mm lower case

200 / 265		171	178	171	51	171	51	286	171	133	171	111	270	95	171	136	203	219	210	178
		a	c	d	e	g	o	q	b	h	i	k	l	m	n	p	r	u	f	w	j	s	t	v	y	x	z
271	A	334			343								330	311	322	314	322	336									
216	B	292			313								288	267	286	275	275	295									
216	C	288			305								281	263	279		284	290									
216	D	286			307								284	261	279		284	288									
199	E	271			288								264	246	262		267	273									
199	F	233			267								242	233	237		239	250									
216	G	288			305								281	263	279		284	290									
216	H	309			326								305	288	303		307	311									
53	I	146			163								142	125	140		144	148									
203	J	294			300								290	273	284		288	296									
220	K	275			301								271	252	269		273	279									
199	L	254			280								250	231	248		252	258									
249	M	342			359								338	321	336		340	344									
216	N	309			326								305	288	303		307	311									
224	O	294			315								292	269	287		292	296									
216	P	281			292								277	250	271		275	279									
224	Q	294			315								292	269	287		292	296									
216	R	286			307								284	261	279		284	288									
216	S	279			303								275	259	273		277	281									
199	T	250			280								246	237	250		254	258									
216	U	307			313								303	286	297		301	309									
245	V	292			321								296	285	302		306	310									
284	W	347			356								343	324	335	327	335	349									
233	X	296			305								292	273	284	276	284	298									
271	Y	305			339								314	300	303		309	326									
216	Z	301			317								299	275	297		301	305									

200 mm UPPER CASE to 150 mm lower case

150 / 200		129	130	134	130	38	129	38	215	130	99	130	83	200	72	129	102	151	164	157	134
		a	c	d	e	g	o	q	b	h	i	k	l	m	n	p	r	u	f	w	j	s	t	v	y	x	z
203	A	250			257								247	233	241	235	241	252									
162	B	219			235								216	200	215	206	206	221									
162	C	216			229								211	197	209		213	218									
162	D	215			230								213	196	209		213	216									
149	E	203			216								198	184	196		200	205									
149	F	175			200								181	175	178		179	187									
162	G	216			229								211	197	209		213	218									
162	H	232			245								229	216	227		230	233									
40	I	110			123								107	94	105		108	111									
152	J	220			225								217	205	213		216	222									
165	K	206			226								203	189	202		205	209									
149	L	190			210								187	173	186		189	193									
187	M	257			270								254	241	252		255	258									
162	N	232			245								229	216	227		230	233									
168	O	221			236								219	202	215		219	222									
162	P	211			219								208	188	203		206	209									
168	Q	221			236								219	202	215		219	222									
162	R	215			230								213	196	209		213	216									
162	S	209			227								206	194	205		208	211									
149	T	187			210								184	178	187		190	193									
162	U	230			235								227	215	223		226	232									
184	V	219			241								222	214	227		230	233									
213	W	260			267								257	243	251	245	251	262									
175	X	222			229								219	205	213	207	213	224									
203	Y	229			254								235	225	227		232	244									
162	Z	226			238								224	206	223		226	229									

250 mm lower case to 250 mm lower case

250		213	216	219	216	64	213	64	359	216	165	216	140	333	117	213	168	254	273	264	219
		a	c	d	e	g	o	q	b	h	i	k	l	m	n	p	r	u	f	w	j	s	t	v	y	x	z
213	a	315			343								311	286	308		315	318									
216	b	289			318								286	260	283		289	292									
213	c	293			318								286	264	286		289	295									
216	d	318			346								314	289	311		318	321									
216	e	296			321								289	267	289		292	298									
140	f	213			242								210	184	207		213	216									
216	g	318			346								314	289	311		318	321									
216	h	318			346								314	289	311		318	321									
64	i	166			194								162	137	159		166	169									
117	j	219			247								215	190	212		219	222									
213	k	286			315								283	257	280		286	289									
64	l	166			194								162	137	159		166	169									
359	m	461			489								457	432	454		461	464									
216	n	318			346								314	289	311		318	321									
219	o	292			321								289	263	286		292	295									
216	p	289			318								286	260	283		289	292									
216	q	318			346								314	289	311		318	321									
165	r	216			245								213	187	206		213	219									
213	s	286			315								283	257	280		286	289									
168	t	244			273								241	216	238		241	248									
216	u	318			346								314	289	311		318	321									
254	v	321			349								314	292	311		318	324									
333	w	403			428								397	374	393		400	406									
264	x	337			362								331	305	328		334	337									
273	y	340			368								333	311	330		337	343									
219	z	295			324								292	267	289		292	299									

200 mm lower case to 200 mm lower case

200		171	178	171	51	171	51	286	171	133	171	111	270	95	171	136	203	219	210	178
		a	c	d	e	g	o	q	b	h	i	k	l	m	n	p	r	u	f	w	j	s	t	v	y	x	z
171	a	254			275								250	230	247		252	256									
171	b	230			254								226	207	224		228	232									
171	c	234			256								230	211	228		232	236									
171	d	254			275								250	230	247		252	256									
171	e	234			256								230	211	228		232	236									
111	f	170			194								166	147	164		168	172									
171	g	254			275								250	230	247		252	256									
171	h	254			275								250	230	247		252	256									
51	i	134			155								130	110	127		132	136									
95	j	178			199								174	154	171		176	180									
171	k	230			254								226	207	224		228	232									
51	l	134			155								130	110	127		132	136									
286	m	369			390								365	345	362		367	371									
171	n	254			275								250	230	247		252	256									
178	o	237			261								233	214	231		235	239									
171	p	230			254								226	207	224		228	232									
171	q	254			275								250	230	247		252	256									
133	r	173			196								171	150	167		171	176									
171	s	230			254								226	207	224		228	232									
136	t	197			221								193	174	191		195	199									
171	u	254			275								250	230	247		252	256									
203	v	256			279								252	232	250		254	258									
270	w	325			346								321	302	319		323	327									
210	x	267			289								263	244	261		265	269									
219	y	272			295								268	248	266		270	274									
178	z	239			263								235	216	233		237	241									

150 mm lower case to 150 mm lower case

150		129	130	134	130	38	129	38	215	130	99	130	83	200	72	129	102	151	164	157	134
		a	c	d	e	g	o	q	b	h	i	k	l	m	n	p	r	u	f	w	j	s	t	v	y	x	z
129	a	191			207								188	173	186		190	193									
130	b	174			192								171	157	170		173	176									
129	c	176			193								173	159	172		175	178									
130	d	192			208								189	174	187		191	194									
130	e	177			194								174	160	173		176	179									
83	f	127			145								124	110	123		126	129									
130	g	192			208								189	174	187		191	194									
130	h	192			208								189	174	187		191	194									
38	i	100			116								97	82	95		99	102									
72	j	134			150								131	116	129		133	136									
129	k	173			191								170	156	169		172	175									
38	l	100			116								97	82	95		99	102									
215	m	277			293								274	259	272		276	279									
130	n	192			208								189	174	187		191	194									
134	o	178			196								175	161	174		177	180									
130	p	174			192								171	157	170		173	176									
130	q	192			208								189	174	187		191	194									
99	r	129			146								128	112	125		128	131									
129	s	173			191								170	156	169		172	175									
102	t	148			166								145	131	143		146	149									
130	u	192			208								189	174	187		191	194									
151	v	191			208								188	173	186		189	192									
200	w	241			257								238	224	237		240	243									
157	x	200			216								197	183	195		198	201									
164	y	204			221								201	186	199		202	205									
134	z	180			198								177	163	175		178	181									

330 mm DIGIT to 330 mm DIGIT

330		280	270					100	270	312	270
		0	2	3	6	8	9	1	5	4	7
280	0	350						367		350	
100	1	187						187		170	
270	2	340						357		340	
270	3	340						357		340	
312	4	382						382		335	
270	5	340						357		340	
270	6	340						357		340	
270	7	340						340		293	
270	8	340						357		340	
270	9	340						357		340	

265 mm DIGIT to 265 mm DIGIT

265		224	216					80	216	249	216
		0	2	3	6	8	9	1	5	4	7
224	0	280						293		280	
80	1	149						149		136	
216	2	272						285		272	
216	3	272						285		272	
249	4	305						305		268	
216	5	272						285		272	
216	6	272						285		272	
216	7	272						272		235	
216	8	272						285		272	
216	9	272						285		272	

200 mm DIGIT to 200 mm DIGIT

200		168	162					60	162	187	162
		0	2	3	6	8	9	1	5	4	7
168	0	210						220		210	
60	1	112						112		102	
162	2	204						214		204	
162	3	204						214		204	
187	4	229						229		201	
162	5	204						214		204	
162	6	204						214		204	
162	7	204						204		176	
162	8	204						214		204	
162	9	204						214		204	

NOTE:

ALL DIMENSIONS ARE IN MILLIMETERS UNLESS OTHERWISE NOTED. SEE SHEETS 12 THROUGH 17 FOR CORRESPONDING ENGLISH UNITS.

METRIC UNITS

COMMONWEALTH OF PENNSYLVANIA
DEPARTMENT OF TRANSPORTATION
BUREAU OF HIGHWAY SAFETY AND TRAFFIC ENGINEERING

SPACING CHARTS
DIRECT APPLIED LETTERS & NUMERALS

UPPER CASE & LOWER CASE
SERIES E MODIFIED (METRIC)

RECOMMENDED MAY 25, 2007
Glenn C Rowe
CHIEF, TRAFFIC ENGINEERING AND OPERATIONS DIVISION

RECOMMENDED MAY 25, 2007
M. C. Patel
CHIEF HIGHWAY ENGINEER

SHT. 3 OF 18

TC-8700C

450 mm UPPER CASE to 450 mm UPPER CASE

450		457	342	335	414	479	457	365	335	365	79	371	335	421	365											378	365	394	365
		A	J	T	V	W	Y	B	D	E	F	H	I	K	L	M	N	P	R	U	C	G	O	Q	S	X	Z		
457	A	489						552																		552			
365	B	460						482																		460			
365	C	428						460																		460			
365	D	460						482																		460			
335	E	398						430																		430			
335	F	398						430																		430			
365	G	460						482																		460			
365	H	460						482																		482			
79	I	174						196																		196			
342	J	437						459																		459			
371	K	434						466																		466			
335	L	367						430																		430			
421	M	516						538																		538			
365	N	460						482																		482			
378	O	473						495																		473			
365	P	460						482																		460			
378	Q	473						495																		473			
365	R	460						482																		460			
365	S	460						482																		460			
335	T	367						430																		430			
365	U	460						482																		482			
414	V	446						509																		509			
479	W	511						574																		574			
394	X	457						489																		489			
457	Y	489						552																		552			
365	Z	428						460																		460			

300 mm UPPER CASE to 300 mm UPPER CASE

300		305	229	224	276	319	305	243	224	243	52	248	224	281	243											252	243	262	243
		A	J	T	V	W	Y	B	D	E	F	H	I	K	L	M	N	P	R	U	C	G	O	Q	S	X	Z		
305	A	326						368																		368			
243	B	306						321																		306			
243	C	285						306																		306			
243	D	306						321																		306			
224	E	266						287																		287			
224	F	266						287																		287			
243	G	306						321																		306			
243	H	306						321																		321			
52	I	115						130																		130			
229	J	292						307																		307			
248	K	290						311																		311			
224	L	245						287																		287			
281	M	344						359																		359			
243	N	306						321																		321			
252	O	315						330																		315			
243	P	306						321																		306			
252	Q	315						330																		315			
243	R	306						321																		306			
243	S	306						321																		306			
224	T	245						287																		287			
243	U	306						321																		321			
276	V	297						339																		339			
319	W	340						382																		382			
262	X	304						325																		325			
305	Y	326						368																		368			
243	Z	285						306																		306			

250 mm UPPER CASE to 250 mm UPPER CASE

250		254	190	186	230	266	254	202	186	202	44	206	186	234	202											210	202	218	202
		A	J	T	V	W	Y	B	D	E	F	H	I	K	L	M	N	P	R	U	C	G	O	Q	S	X	Z		
254	A	271						306																		306			
202	B	254						268																		254			
202	C	237						254																		254			
202	D	254						268																		254			
186	E	221						238																		238			
186	F	221						238																		238			
202	G	254						268																		254			
202	H	254						268																		268			
44	I	96						110																		110			
190	J	242						256																		256			
206	K	241						258																		258			
186	L	203						238																		238			
234	M	286						300																		300			
202	N	254						268																		268			
210	O	262						276																		262			
202	P	254						268																		254			
210	Q	262						276																		262			
202	R	254						268																		254			
202	S	254						268																		254			
186	T	203						238																		238			
202	U	254						268																		268			
230	V	247						282																		282			
266	W	283						318																		318			
218	X	253						270																		270			
254	Y	271						306																		306			
202	Z	237						254																		254			

200 mm UPPER CASE to 200 mm UPPER CASE

200		203	152	149	184	213	203	162	149	162	35	165	149	187	162											168	162	175	162
		A	J	T	V	W	Y	B	D	E	F	H	I	K	L	M	N	P	R	U	C	G	O	Q	S	X	Z		
203	A	217						245																		245			
162	B	204						214																		204			
162	C	190						204																		204			
162	D	204						214																		204			
149	E	177						191																		191			
149	F	177						191																		191			
162	G	204						214																		204			
162	H	204						214																		214			
35	I	77						87																		87			
152	J	194						204																		204			
165	K	193						207																		207			
149	L	163						191																		191			
187	M	229						239																		239			
162	N	204						214																		214			
168	O	210						220																		210			
162	P	204						214																		204			
168	Q	210						220																		210			
162	R	204						214																		204			
162	S	204						214																		204			
149	T	163						191																		191			
162	U	204						214																		214			
184	V	198						226																		226			
213	W	227						255																		255			
175	X	203						217																		217			
203	Y	217						245																		245			
162	Z	190						204																		204			

450 mm DIGIT to 450 mm DIGIT

450		378	365					135	365	421	365
		0	2	3	6	8	9	1	5	4	7
378	0	473						495		473	
135	1	252						252		230	
365	2	460						482		460	
365	3	460						482		460	
421	4	516						516		453	
365	5	460						482		460	
365	6	460						482		460	
365	7	460						460		397	
365	8	460						482		460	
365	9	460						482		460	

300 mm DIGIT to 300 mm DIGIT

300		252	243					90	243	281	243
		0	2	3	6	8	9	1	5	4	7
252	0	315						330		315	
90	1	168						168		153	
243	2	306						321		306	
243	3	306						321		306	
281	4	344						344		302	
243	5	306						321		306	
243	6	306						321		306	
243	7	306						306		264	
243	8	306						321		306	
243	9	306						321		306	

250 mm DIGIT to 250 mm DIGIT

250		210	202					75	202	234	202
		0	2	3	6	8	9	1	5	4	7
210	0	262						276		262	
75	1	141						141		127	
202	2	254						268		254	
202	3	254						268		254	
234	4	286						286		251	
202	5	254						268		254	
202	6	254						268		254	
202	7	254						254		219	
202	8	254						268		254	
202	9	254						268		254	

200 mm DIGIT to 200 mm DIGIT

200		168	162					60	162	187	162
		0	2	3	6	8	9	1	5	4	7
168	0	210						220		210	
60	1	112						112		102	
162	2	204						214		204	
162	3	204						214		204	
187	4	229						229		201	
162	5	204						214		204	
162	6	204						214		204	
162	7	204						204		176	
162	8	204						214		204	
162	9	204						214		204	

150 mm UPPER CASE to 150 mm UPPER CASE

150		152	114	112	138	160	152	121	112	121	26	124	112	140	121											126	121	131	121
		A	J	T	V	W	Y	B	D	E	F	H	I	K	L	M	N	P	R	U	C	G	O	Q	S	X	Z		
152	A	162						184																		194			
121	B	153						160																		185			
121	C	142						153																		153			
121	D	153						160																		153			
112	E	133						144																		144			
112	F	133						144																		144			
121	G	153						160																		153			
121	H	153						160																		160			
26	I	58						65																		65			
114	J	146						153																		153			
124	K	145						156																		156			
112	L	122						144																		144			
140	M	172						179																		179			
121	N	153						160																		160			
126	O	158						165																		158			
121	P	153						160																		153			
126	Q	158						165																		158			
121	R	153						160																		153			
121	S	153						160																		153			
112	T	122						144																		144			
121	U	153						160																		160			
138	V	148						170																		170			
160	W	170						192																		192			
131	X	152						163																		163			
152	Y	162						184																		184			
121	Z	142						153																		153			

150 mm DIGIT to 150 mm DIGIT

150		126	121					45	121	140	121
		0	2	3	6	8	9	1	5	4	7
126	0	158						165		158	
45	1	84						84		77	
121	2	153						160		153	
121	3	153						160		153	
140	4	172						172		150	
121	5	153						160		153	
121	6	153						160		153	
121	7	153						153		131	
121	8	153						160		153	
121	9	153						160		153	

100 mm UPPER CASE to 100 mm UPPER CASE

100		102	76	75	92	106	102	81	75	81	18	83	75	94	81											84	81	87	81
		A	J	T	V	W	Y	B	D	E	F	H	I	K	L	M	N	P	R	U	C	G	O	Q	S	X	Z		
102	A	109						123																		123			
81	B	102						107																		102			
81	C	95						102																		102			
81	D	102						107																		102			
75	E	89						96																		96			
75	F	89						96																		96			
81	G	102						107																		102			
81	H	102						107																		107			
18	I	39						44																		44			
76	J	97						102																		102			
83	K	97						104																		104			
75	L	82						96																		96			
94	M	115						120																		120			
81	N	102						107																		107			
84	O	105						110																		105			
81	P	102						107																		102			
84	Q	105						110																		105			
81	R	102						107																		102			
81	S	102						107																		102			
75	T	82						96																		96			
81	U	102						107																		107			
92	V	99						113																		113			
106	W	113						127																		127			
87	X	101						108																		108			
102	Y	109						123																		123			
81	Z	95						102																		102			

100 mm DIGIT to 100 mm DIGIT

100		84	81					30	81	94	81
		0	2	3	6	8	9	1	5	4	7
84	0	105						110		105	
30	1	56						56		51	
81	2	102						107		102	
81	3	102						107		102	
94	4	115						115		101	
81	5	102						107		102	
81	6	102						107		102	
81	7	102						102		88	
81	8	102						107		102	
81	9	102						107		102	

NOTE:

ALL DIMENSIONS ARE IN MILLIMETERS UNLESS OTHERWISE NOTED. SEE SHEETS 12 THROUGH 17 FOR CORRESPONDING ENGLISH UNITS.

METRIC UNITS

COMMONWEALTH OF PENNSYLVANIA
DEPARTMENT OF TRANSPORTATION
BUREAU OF HIGHWAY SAFETY AND TRAFFIC ENGINEERING

SPACING CHARTS
DIRECT APPLIED LETTERS & NUMERALS

UPPER CASE
SERIES E (METRIC)

RECOMMENDED MAY 25, 2007
Glenn C Rowe
CHIEF, TRAFFIC ENGINEERING AND OPERATIONS DIVISION

RECOMMENDED MAY 25, 2007
M. C. Patel
CHIEF HIGHWAY ENGINEER

SHT. 4 OF 18

TC-8700C

450 mm UPPER CASE to 450 mm UPPER CASE

450		383	286	279	342	401	385	308	279	308	72	315	279	353	308	322	308
		A	J	T	V	W	Y	B	D	E	F	H	I	K	L	M	N	P	R	U	C	G	O	Q	S	X	Z
383	A	412						469																	469		
308	B	394						416																	394		
308	C	364						394																	394		
308	D	394						416																	394		
279	E	335						365																	365		
279	F	335						365																	365		
308	G	394						416																	394		
308	H	394						416																	416		
72	I	158						180																	180		
286	J	372						394																	394		
315	K	371						401																	401		
279	L	308						365																	365		
353	M	439						461																	461		
308	N	394						416																	416		
322	O	408						430																	408		
308	P	394						416																	394		
322	Q	408						430																	408		
308	R	394						416																	394		
308	S	394						416																	394		
279	T	308						365																	365		
308	U	394						416																	416		
342	V	371						428																	428		
401	W	430						487																	487		
308	X	364						394																	394		
385	Y	414						471																	471		
308	Z	364						394																	394		

300 mm UPPER CASE to 300 mm UPPER CASE

300		255	190	186	229	267	257	205	186	205	48	210	186	236	205	214	205
		A	J	T	V	W	Y	B	D	E	F	H	I	K	L	M	N	P	R	U	C	G	O	Q	S	X	Z
255	A	274						312																	312		
205	B	262						276																	262		
205	C	243						262																	262		
205	D	262						276																	262		
186	E	224						243																	243		
186	F	224						243																	243		
205	G	262						276																	262		
205	H	262						276																	276		
48	I	105						119																	119		
190	J	247						261																	261		
210	K	248						267																	267		
186	L	205						243																	243		
236	M	293						307																	307		
205	N	262						276																	276		
214	O	271						285																	271		
205	P	262						276																	262		
214	Q	271						285																	271		
205	R	262						276																	262		
205	S	262						276																	262		
186	T	205						243																	243		
205	U	262						276																	276		
229	V	248						286																	286		
267	W	286						324																	324		
205	X	243						262																	262		
257	Y	276						314																	314		
205	Z	243						262																	262		

250 mm UPPER CASE to 250 mm UPPER CASE

250		212	159	155	190	222	214	171	155	171	40	175	155	196	171	179	171
		A	J	T	V	W	Y	B	D	E	F	H	I	K	L	M	N	P	R	U	C	G	O	Q	S	X	Z
212	A	228						260																	260		
171	B	219						230																	219		
171	C	203						219																	219		
171	D	219						230																	219		
155	E	187						203																	203		
155	F	187						203																	203		
171	G	219						230																	219		
171	H	219						230																	230		
40	I	88						99																	99		
159	J	207						218																	218		
175	K	207						223																	223		
155	L	171						203																	203		
196	M	244						255																	255		
171	N	219						230																	230		
179	O	227						238																	227		
171	P	219						230																	219		
179	Q	227						238																	227		
171	R	219						230																	219		
171	S	219						230																	219		
155	T	171						203																	203		
171	U	219						230																	230		
190	V	206						238																	238		
222	W	238						270																	270		
171	X	203						219																	219		
214	Y	230						262																	262		
171	Z	203						219																	219		

200 mm UPPER CASE to 200 mm UPPER CASE

200		170	127	124	152	178	171	137	124	137	32	140	124	157	137	143	137
		A	J	T	V	W	Y	B	D	E	F	H	I	K	L	M	N	P	R	U	C	G	O	Q	S	X	Z
170	A	183						208																	208		
137	B	175						185																	175		
137	C	162						175																	175		
137	D	175						185																	175		
124	E	149						162																	162		
124	F	149						162																	162		
137	G	175						185																	175		
137	H	175						185																	185		
32	I	70						80																	80		
127	J	165						175																	175		
140	K	165						178																	178		
124	L	137						162																	162		
157	M	195						205																	205		
137	N	175						185																	185		
143	O	181						191																	181		
137	P	175						185																	175		
143	Q	181						191																	181		
137	R	175						185																	175		
137	S	175						185																	175		
124	T	137						162																	162		
137	U	175						185																	185		
152	V	165						190																	190		
178	W	191						216																	216		
137	X	162						175																	175		
171	Y	184						209																	209		
137	Z	162						175																	175		

450 mm DIGIT to 450 mm DIGIT

450		322	308					110	308	335	308
		0	2	3	6	8	9	1	5	4	7
322	0	408						430			408
110	1	218						218			196
308	2	394						416			394
308	3	394						416			394
335	4	421						421			364
308	5	394						416			394
308	6	394						416			394
308	7	394						394			337
308	8	394						416			394
308	9	394						416			394

300 mm DIGIT to 300 mm DIGIT

300		214	205					74	205	224	205
		0	2	3	6	8	9	1	5	4	7
214	0	271						285			271
74	1	145						145			131
205	2	262						276			262
205	3	262						276			262
224	4	281						281			243
205	5	262						276			262
205	6	262						276			262
205	7	262						262			224
205	8	262						276			262
205	9	262						276			262

250 mm DIGIT to 250 mm DIGIT

250		179	171					61	171	186	171
		0	2	3	6	8	9	1	5	4	7
179	0	227						238			227
61	1	120						120			109
171	2	219						230			219
171	3	219						230			219
186	4	234						234			202
171	5	219						230			219
171	6	219						230			219
171	7	219						219			187
171	8	219						230			219
171	9	219						230			219

200 mm DIGIT to 200 mm DIGIT

200		143	137					50	137	149	137
		0	2	3	6	8	9	1	5	4	7
143	0	181						191			181
50	1	98						98			88
137	2	175						185			175
137	3	175						185			175
149	4	187						187			162
137	5	175						185			175
137	6	175						185			175
137	7	175						175			150
137	8	175						185			175
137	9	175						185			175

150 mm UPPER CASE to 150 mm UPPER CASE

150		128	95	93	114	133	128	102	93	102	24	105	93	118	102	107	102
		A	J	T	V	W	Y	B	D	E	F	H	I	K	L	M	N	P	R	U	C	G	O	Q	S	X	Z
128	A	138						156																	156		
102	B	130						138																	130		
102	C	121						130																	130		
102	D	130						138																	130		
93	E	112						121																	121		
93	F	112						121																	121		
102	G	130						138																	130		
102	H	130						138																	138		
24	I	52						60																	60		
95	J	123						131																	131		
105	K	124						133																	133		
93	L	103						121																	121		
118	M	146						154																	154		
102	N	130						138																	138		
107	O	135						143																	135		
102	P	130						138																	130		
107	Q	135						143																	135		
102	R	130						138																	130		
102	S	130						138																	130		
93	T	103						121																	121		
102	U	130						138																	138		
114	V	124						142																	142		
133	W	143						161																	161		
102	X	121						130																	130		
128	Y	138						156																	156		
102	Z	121						130																	130		

150 mm DIGIT to 150 mm DIGIT

150		107	102					37	102	112	102
		0	2	3	6	8	9	1	5	4	7
107	0	135						143			135
37	1	73						73			65
102	2	130						138			130
102	3	130						138			130
112	4	140						140			122
102	5	130						138			130
102	6	130						138			130
102	7	130						130			112
102	8	130						138			130
102	9	130						138			130

100 mm UPPER CASE to 100 mm UPPER CASE

100		85	64	62	76	89	86	68	62	68	16	70	62	78	68	71	68
		A	J	T	V	W	Y	B	D	E	F	H	I	K	L	M	N	P	R	U	C	G	O	Q	S	X	Z
85	A	91						104																	104		
68	B	87						92																	87		
68	C	81						87																	87		
68	D	87						92																	87		
62	E	75						81																	81		
62	F	75						81																	81		
68	G	87						92																	87		
68	H	87						92																	92		
16	I	35						40																	40		
64	J	83						88																	88		
70	K	83						89																	89		
62	L	68						81																	81		
78	M	97						102																	102		
68	N	87						92																	92		
71	O	90						95																	90		
68	P	87						92																	87		
71	Q	90						95																	90		
68	R	87						92																	87		
68	S	87						92																	87		
62	T	68						81																	81		
68	U	87						92																	92		
76	V	82						95																	95		
89	W	95						108																	108		
68	X	81						87																	87		
86	Y	92						105																	105		
68	Z	81						87																	87		

100 mm DIGIT to 100 mm DIGIT

100		71	68					25	68	75	68
		0	2	3	6	8	9	1	5	4	7
71	0	90						95			90
25	1	49						49			44
68	2	87						92			87
68	3	87						92			87
75	4	94						94			81
68	5	87						92			87
68	6	87						92			87
68	7	87						87			74
68	8	87						92			87
68	9	87						92			87

METRIC UNITS

NOTE:

ALL DIMENSIONS ARE IN MILLIMETERS UNLESS OTHERWISE NOTED. SEE SHEETS 12 THROUGH 17 FOR CORRESPONDING ENGLISH UNITS.

COMMONWEALTH OF PENNSYLVANIA
DEPARTMENT OF TRANSPORTATION
BUREAU OF HIGHWAY SAFETY AND TRAFFIC ENGINEERING

SPACING CHARTS
DIRECT APPLIED LETTERS & NUMERALS

UPPER CASE
SERIES D (METRIC)

RECOMMENDED MAY 25, 2007
Glenn C Rowe
CHIEF, TRAFFIC ENGINEERING AND OPERATIONS DIVISION

RECOMMENDED MAY 25, 2007
M. C. Patel
CHIEF HIGHWAY ENGINEER

SHT. 5 OF 18

TC-8700C

450 mm UPPER CASE to 450 mm UPPER CASE

450		286	230	279	342	286	250	230	250	63	250	230	297	250	263	250	268	250
		A	J	T	V	W	Y	B	D	E	F	H	I	K	L	M	N	P	R	U	C	G	O	Q	S	X	Z
286	A	312						364																	364		
250	B	328						346																	328		
250	C	301						328																	328		
250	D	328						346																	328		
230	E	281						308																	308		
230	F	281						308																	308		
250	G	328						346																	328		
250	H	328						346																	346		
63	I	141						159																	159		
230	J	308						326																	326		
250	K	301						328																	328		
230	L	256						308																	308		
297	M	375						393																	393		
250	N	328						346																	346		
263	O	341						359																	341		
250	P	328						346																	328		
263	Q	341						359																	341		
250	R	328						346																	328		
250	S	328						346																	328		
230	T	256						308																	308		
250	U	328						346																	346		
279	V	305						357																	357		
342	W	368						420																	420		
268	X	319						346																	346		
286	Y	312						364																	364		
250	Z	301						328																	328		

300 mm UPPER CASE to 300 mm UPPER CASE

300		190	152	186	229	190	167	152	167	43	167	152	198	167	176	167	179	167
		A	J	T	V	W	Y	B	D	E	F	H	I	K	L	M	N	P	R	U	C	G	O	Q	S	X	Z
190	A	207						242																	242		
167	B	219						231																	219		
167	C	201						219																	219		
167	D	219						231																	219		
152	E	186						204																	204		
152	F	186						204																	204		
167	G	219						231																	219		
167	H	219						231																	231		
43	I	95						107																	107		
152	J	204						216																	216		
167	K	201						219																	219		
152	L	169						204																	204		
198	M	250						262																	262		
167	N	219						231																	231		
176	O	228						240																	228		
167	P	219						231																	219		
176	Q	228						240																	228		
167	R	219						231																	219		
167	S	219						231																	219		
152	T	169						204																	204		
167	U	219						231																	231		
186	V	203						238																	238		
229	W	246						281																	281		
179	X	213						231																	231		
190	Y	207						242																	242		
167	Z	201						219																	219		

250 mm UPPER CASE to 250 mm UPPER CASE

250		159	127	155	190	159	139	127	139	36	139	127	165	139	147	139	149	139
		A	J	T	V	W	Y	B	D	E	F	H	I	K	L	M	N	P	R	U	C	G	O	Q	S	X	Z
159	A	173						202																	202		
139	B	182						193																	182		
139	C	167						182																	182		
139	D	182						193																	182		
127	E	155						170																	170		
127	F	155						170																	170		
139	G	182						193																	182		
139	H	182						193																	193		
36	I	79						90																	90		
127	J	170						181																	181		
139	K	167						182																	182		
127	L	141						170																	170		
165	M	208						219																	219		
139	N	182						193																	193		
147	O	190						201																	190		
139	P	182						193																	182		
147	Q	190						201																	190		
139	R	182						193																	182		
139	S	182						193																	182		
127	T	141						170																	170		
139	U	182						193																	193		
155	V	169						198																	198		
190	W	204						233																	233		
149	X	177						192																	192		
159	Y	173						202																	202		
139	Z	167						182																	182		

200 mm UPPER CASE to 200 mm UPPER CASE

200		127	102	124	152	127	111	102	111	28	111	102	132	111	117	111	119	111
		A	J	T	V	W	Y	B	D	E	F	H	I	K	L	M	N	P	R	U	C	G	O	Q	S	X	Z
127	A	138						161																	161		
111	B	145						154																	145		
111	C	134						145																	145		
111	D	145						154																	145		
102	E	125						136																	136		
102	F	125						136																	136		
111	G	145						154																	145		
111	H	145						154																	154		
28	I	62						71																	71		
102	J	136						145																	145		
111	K	134						145																	145		
102	L	113						136																	136		
132	M	166						175																	175		
111	N	145						154																	154		
117	O	151						160																	151		
111	P	145						154																	145		
117	Q	151						160																	151		
111	R	145						154																	145		
111	S	145						154																	145		
102	T	113						136																	136		
111	U	145						154																	154		
124	V	135						158																	158		
152	W	163						186																	186		
119	X	142						153																	153		
127	Y	138						161																	161		
111	Z	134						145																	145		

450 mm DIGIT to 450 mm DIGIT

450		263	250					92	250	279	250
		0	2	3	6	8	9	1	5	4	7
263	0	341						359		341	
92	1	188						188		170	
250	2	328						346		328	
250	3	328						346		328	
279	4	357						357		305	
250	5	328						346		328	
250	6	328						346		328	
250	7	328						328		276	
250	8	328						346		328	
250	9	328						346		328	

300 mm DIGIT to 300 mm DIGIT

300		176	167					62	167	186	167
		0	2	3	6	8	9	1	5	4	7
176	0	228						240		228	
62	1	126						126		114	
167	2	219						231		219	
167	3	219						231		219	
186	4	238						238		203	
167	5	219						231		219	
167	6	219						231		219	
167	7	219						219		184	
167	8	219						231		219	
167	9	219						231		219	

250 mm DIGIT to 250 mm DIGIT

250		147	139					52	139	155	139
		0	2	3	6	8	9	1	5	4	7
147	0	190						201		190	
52	1	106						106		95	
139	2	182						193		182	
139	3	182						193		182	
155	4	198						198		169	
139	5	182						193		182	
139	6	182						193		182	
139	7	182						182		153	
139	8	182						193		182	
139	9	182						193		182	

200 mm DIGIT to 200 mm DIGIT

200		117	111					41	111	124	111
		0	2	3	6	8	9	1	5	4	7
117	0	151						160		151	
41	1	84						84		75	
111	2	145						154		145	
111	3	145						154		145	
124	4	158						158		135	
111	5	145						154		145	
111	6	145						154		145	
111	7	145						145		122	
111	8	145						154		145	
111	9	145						154		145	

150 mm UPPER CASE to 150 mm UPPER CASE

150		95	76	93	114	95	83	76	83	21	83	76	99	83	88	83	89	83
		A	J	T	V	W	Y	B	D	E	F	H	I	K	L	M	N	P	R	U	C	G	O	Q	S	X	Z
95	A	104						121																	121		
83	B	109						115																	109		
83	C	100						109																	109		
83	D	109						115																	109		
76	E	93						102																	102		
76	F	93						102																	102		
83	G	109						115																	109		
83	H	109						115																	115		
21	I	47						53																	53		
76	J	102						108																	108		
83	K	100						109																	109		
76	L	85						102																	102		
99	M	125						131																	131		
83	N	109						115																	115		
88	O	114						120																	114		
83	P	109						115																	109		
88	Q	114						120																	114		
83	R	109						115																	109		
83	S	109						115																	109		
76	T	85						102																	102		
83	U	109						115																	115		
93	V	102						119																	119		
114	W	123						140																	140		
89	X	106						115																	115		
95	Y	104						121																	121		
83	Z	100						109																	109		

150 mm DIGIT to 150 mm DIGIT

150		88	83					31	83	93	83
		0	2	3	6	8	9	1	5	4	7
88	0	114						120		114	
31	1	63						63		57	
83	2	109						115		109	
83	3	109						115		109	
93	4	119						119		102	
83	5	109						115		109	
83	6	109						115		109	
83	7	109						109		92	
83	8	109						115		109	
83	9	109						115		109	

100 mm UPPER CASE to 100 mm UPPER CASE

100		64	51	62	76	64	56	51	56	14	56	51	66	56	59	56	59	56
		A	J	T	V	W	Y	B	D	E	F	H	I	K	L	M	N	P	R	U	C	G	O	Q	S	X	Z
64	A	70						81																	81		
56	B	73						77																	73		
56	C	67						73																	73		
56	D	73						77																	73		
51	E	62						68																	68		
51	F	62						68																	68		
56	G	73						77																	73		
56	H	73						77																	77		
14	I	31						35																	35		
51	J	68						72																	72		
56	K	67						73																	73		
51	L	57						68																	68		
66	M	83						87																	87		
56	N	73						77																	77		
59	O	76						80																	76		
56	P	73						77																	73		
59	Q	76						80																	76		
56	R	73						77																	73		
56	S	73						77																	73		
51	T	57						68																	68		
56	U	73						77																	77		
62	V	68						79																	79		
76	W	82						93																	93		
59	X	70						76																	76		
64	Y	70						81																	81		
56	Z	67						73																	73		

100 mm DIGIT to 100 mm DIGIT

100		59	56					21	56	62	56
		0	2	3	6	8	9	1	5	4	7
59	0	76						80		76	
21	1	42						42		38	
56	2	73						77		73	
56	3	73						77		73	
62	4	79						79		68	
56	5	73						77		73	
56	6	73						77		73	
56	7	73						73		62	
56	8	73						77		73	
56	9	73						77		73	

METRIC UNITS

NOTE:

ALL DIMENSIONS ARE IN MILLIMETERS UNLESS OTHERWISE NOTED. SEE SHEETS 12 THROUGH 17 FOR CORRESPONDING ENGLISH UNITS.

COMMONWEALTH OF PENNSYLVANIA
DEPARTMENT OF TRANSPORTATION
BUREAU OF HIGHWAY SAFETY AND TRAFFIC ENGINEERING

SPACING CHARTS
DIRECT APPLIED LETTERS & NUMERALS

UPPER CASE
SERIES C (METRIC)

RECOMMENDED MAY 25, 2007
Glenn C Rowe
CHIEF, TRAFFIC ENGINEERING AND OPERATIONS DIVISION

RECOMMENDED MAY 25, 2007
M. C. Patel
CHIEF HIGHWAY ENGINEER

SHT. 6 OF 18

TC-8700C

250 mm UPPER CASE to 250 mm UPPER CASE

250		135	111	95	117	159	135	107	95	107	32	111	95	123	107	115	107	117	107
		A	J	T	V	W	Y	B	D	E	F	H	I	K	L	M	N	P	R	U	C	G	O	Q	S	X	Z
135	A	148						173													173						
107	B	145						155													145						
107	C	132						145													145						
107	D	145						155													145						
95	E	120						133													133						
95	F	120						133													133						
107	G	145						155													145						
107	H	145						155													155						
32	I	70						80													80						
111	J	149						159													159						
111	K	136						149													149						
95	L	108						133													133						
123	M	161						171													171						
107	N	145						155													155						
115	O	153						163													153						
107	P	145						155													145						
115	Q	153						163													153						
107	R	145						155													145						
107	S	145						155													145						
95	T	108						133													133						
107	U	145						155													155						
117	V	130						155													155						
159	W	172						197													197						
117	X	142						155													155						
135	Y	148						173													173						
107	Z	132						145													145						

200 mm UPPER CASE to 200 mm UPPER CASE

200		108	89	76	94	127	108	86	76	86	25	89	76	99	86	92	86	94	86
		A	J	T	V	W	Y	B	D	E	F	H	I	K	L	M	N	P	R	U	C	G	O	Q	S	X	Z
108	A	118						138													138						
86	B	116						124													116						
86	C	106						116													116						
86	D	116						124													116						
76	E	96						106													106						
76	F	96						106													106						
86	G	116						124													116						
86	H	116						124													124						
25	I	55						63													63						
89	J	119						127													127						
89	K	109						119													119						
76	L	86						106													106						
99	M	129						137													137						
86	N	116						124													124						
92	O	122						130													122						
86	P	116						124													116						
92	Q	122						130													122						
86	R	116						124													116						
86	S	116						124													116						
76	T	86						106													106						
86	U	116						124													124						
94	V	104						124													124						
127	W	137						157													157						
94	X	114						124													124						
108	Y	118						138													138						
86	Z	106						116													116						

150 mm UPPER CASE to 150 mm UPPER CASE

150		81	66	57	70	95	81	64	57	64	19	66	57	74	64	69	64	70	64
		A	J	T	V	W	Y	B	D	E	F	H	I	K	L	M	N	P	R	U	C	G	O	Q	S	X	Z
81	A	89						104													104						
64	B	87						93													87						
64	C	79						87													87						
64	D	87						93													87						
57	E	72						80													80						
57	F	72						80													80						
64	G	87						93													87						
64	H	87						93													93						
19	I	42						48													48						
66	J	89						95													95						
66	K	81						89													89						
57	L	65						80													80						
74	M	97						103													103						
64	N	87						93													93						
69	O	92						98													92						
64	P	87						93													87						
69	Q	92						98													92						
64	R	87						93													87						
64	S	87						93													87						
57	T	65						80													80						
64	U	87						93													93						
70	V	78						93													93						
95	W	103						118													118						
70	X	85						93													93						
81	Y	89						104													104						
64	Z	79						87													87						

250 mm DIGIT to 250 mm DIGIT

250		115	107					52	107	123	107
		0	2	3	6	8	9	1	5	4	7
115	0	153						163		153	
52	1	100						100		90	
107	2	145						155		145	
107	3	145						155		145	
123	4	161						161		136	
107	5	145						155		145	
107	6	145						155		145	
107	7	145						145		120	
107	8	145						155		145	
107	9	145						155		145	

200 mm DIGIT to 200 mm DIGIT

200		92	86					41	86	99	86
		0	2	3	6	8	9	1	5	4	7
92	0	122						130		122	
41	1	79						79		71	
86	2	116						124		116	
86	3	116						124		116	
99	4	129						129		109	
86	5	116						124		116	
86	6	116						124		116	
86	7	116						116		96	
86	8	116						124		116	
86	9	116						124		116	

150 mm DIGIT to 150 mm DIGIT

150		69	64					31	64	74	64
		0	2	3	6	8	9	1	5	4	7
69	0	92						98		92	
31	1	60						60		54	
64	2	87						93		87	
64	3	87						93		87	
74	4	97						97		82	
64	5	87						93		87	
64	6	87						93		87	
64	7	87						87		72	
64	8	87						93		87	
64	9	87						93		87	

100 mm UPPER CASE to 100 mm UPPER CASE

100		54	44	38	47	64	54	43	38	43	13	44	38	49	43	46	43	47	43
		A	J	T	V	W	Y	B	D	E	F	H	I	K	L	M	N	P	R	U	C	G	O	Q	S	X	Z
54	A	59						69													69						
43	B	58						62													58						
43	C	53						58													58						
43	D	58						62													58						
38	E	48						53													53						
38	F	48						53													53						
43	G	58						62													58						
43	H	58						62													62						
13	I	28						32													32						
44	J	59						63													63						
44	K	54						59													59						
38	L	43						53													53						
49	M	64						68													68						
43	N	58						62													62						
46	O	61						65													61						
43	P	58						62													58						
46	Q	61						65													61						
43	R	58						62													58						
43	S	58						62													58						
38	T	43						53													53						
43	U	58						62													62						
47	V	52						62													62						
64	W	69						79													79						
47	X	57						62													62						
54	Y	59						69													69						
43	Z	53						58													58						

100 mm DIGIT to 100 mm DIGIT

100		46	43					21	43	49	43
		0	2	3	6	8	9	1	5	4	7
46	0	61						65		61	
21	1	40						40		36	
43	2	58						62		58	
43	3	58						62		58	
49	4	64						64		54	
43	5	58						62		58	
43	6	58						62		58	
43	7	58						58		48	
43	8	58						62		58	
43	9	58						62		58	

NOTES:

1. USE OF SERIES B ALPHABET IS RESTRICTED TO STREET NAME SIGNS, PARKING SIGNS AND OTHER SIMILAR SIGNS WHERE LIMITED BREADTH AND STROKE WIDTHS ARE REQUIRED FOR DESIGN PURPOSES.
2. ALL DIMENSIONS ARE IN MILLIMETERS UNLESS OTHERWISE NOTED. SEE SHEETS 12 THROUGH 17 FOR CORRESPONDING ENGLISH UNITS.

METRIC UNITS

COMMONWEALTH OF PENNSYLVANIA
DEPARTMENT OF TRANSPORTATION
BUREAU OF HIGHWAY SAFETY AND TRAFFIC ENGINEERING

SPACING CHARTS
DIRECT APPLIED LETTERS & NUMERALS

UPPER CASE
SERIES B (METRIC)

RECOMMENDED MAY 25, 2007
Glenn C Rowe
CHIEF, TRAFFIC ENGINEERING AND OPERATIONS DIVISION

RECOMMENDED MAY 25, 2007
M. C. Patel
CHIEF HIGHWAY ENGINEER

TC-8700C

20" UPPER CASE to lower case

20		14.8	13.6	14.6	14.8	14.6	15.4	16.0	4.6	14.4	13.8	14.2	6.4	22.6	13.8	14.6	9.2	13.6	9.6	8.8	12.8	9.8	15.2	23.2	15.4	15.6	12.2
		a	c	d	e	g	o	q	i	b	h	k	l	m	n	p	r	c	f	j	s	t	v	w	x	y	z
18.8	A	23.2	23.6		24.0		24.4			22.8	20.0	22.8	22.4	22.0	22.2	21.8	22.0	23.0									
15.2	B	20.8	21.2		21.6		22.0			20.4	17.6	20.4	20.0	19.6	19.8	19.4	19.6	20.6									
16.4	C	21.2	21.6		22.0		22.4			20.8	18.0	20.8	20.4	20.0	20.2	19.8	20.0	21.0									
16.2	D	22.0	22.4		22.8		23.2			21.6	18.8	21.6	21.2	20.8	21.0	20.6	20.8	21.8									
12.8	E	18.2	18.6		19.0		19.4			17.8	15.0	17.8	17.4	17.0	17.2	16.8	17.0	18.0									
12.2	F	17.4	17.8		18.2		18.6			17.0	14.2	17.0	16.6	16.2	16.4	16.0	16.2	17.2									
17.4	G	23.2	23.6		24.0		24.4			22.8	20.0	22.8	22.4	22.0	22.2	21.8	22.0	23.0									
15.4	H	22.0	22.4		22.8		23.2			21.6	18.8	21.6	21.2	20.8	21.0	20.6	20.8	21.8									
4.0	I	10.6	11.0		11.4		11.8			10.2	7.4	10.2	9.8	9.4	9.6	9.2	9.4	10.4									
11.2	J	17.8	18.2		18.6		19.0			17.4	14.6	17.4	17.0	16.6	16.8	16.4	16.6	17.6									
15.6	K	20.0	20.4		20.8		21.2			19.6	16.8	19.6	19.2	18.8	19.0	18.6	18.8	19.8									
11.8	L	16.8	17.2		17.6		18.0			16.4	13.6	16.4	16.0	15.6	15.8	15.4	15.6	16.6									
18.4	M	25.0	25.4		25.8		26.2			24.6	21.8	24.6	24.2	23.8	24.0	23.6	23.8	24.8									
16.6	N	23.2	23.6		24.0		24.4			22.8	20.0	22.8	22.4	22.0	22.2	21.8	22.0	23.0									
18.6	O	24.4	24.8		25.2		25.6			24.0	21.2	24.0	23.6	23.2	23.4	23.0	23.2	24.2									
14.6	P	19.6	20.0		20.4		20.8			19.2	16.4	19.2	18.8	18.4	18.6	18.2	18.4	19.4									
18.6	Q	24.4	24.8		25.2		25.6			24.0	21.2	24.0	23.6	23.2	23.4	23.0	23.2	24.2									
15.0	R	20.6	21.0		21.4		21.8			20.2	17.4	20.2	19.8	19.4	19.6	19.2	19.4	20.4									
14.4	S	19.6	20.0		20.4		20.8			19.2	16.4	19.2	18.8	18.4	18.6	18.2	18.4	19.4									
14.4	T	19.0	19.4		19.8		20.2			18.6	15.8	18.6	18.2	17.8	18.0	17.6	17.8	18.8									
15.6	U	22.2	22.6		23.0		23.4			21.8	19.0	21.8	21.4	21.0	21.2	20.8	21.0	22.0									
17.0	V	21.4	21.8		22.2		22.6			21.0	18.2	21.0	20.6	20.2	20.4	20.0	20.2	21.2									
26.6	W	31.2	31.6		32.0		32.4			30.8	28.0	30.8	30.4	30.0	30.2	29.8	30.0	31.0									
17.2	X	21.4	21.8		22.2		22.6			21.0	18.2	21.0	20.6	20.2	20.4	20.0	20.2	21.2									
17.6	Y	21.6	22.0		22.4		22.8			21.2	18.4	21.2	20.8	20.4	20.6	20.2	20.4	21.4									
14.4	Z	19.6	20.0		20.4		20.8			19.2	16.4	19.2	18.8	18.4	18.6	18.2	18.4	19.4									

16" UPPER CASE to lower case

16		11.8	10.9	11.7	11.8	11.7	12.3	12.8	3.7	11.5	11.0	11.4	5.1	18.1	11.0	11.7	7.4	10.9	7.7	7.0	10.2	7.8	12.2	18.6	12.3	12.5	9.8
		a	c	d	e	g	o	q	i	b	h	k	l	m	n	p	r	c	f	j	s	t	v	w	x	y	z
15.0	A	18.6	18.9		19.2		19.5			18.2	16.0	18.2	17.9	17.6	17.8	17.4	17.6	18.4									
12.2	B	16.6	17.0		17.3		17.6			16.3	14.1	16.3	16.0	15.7	15.8	15.5	15.7	16.5									
13.1	C	17.0	17.3		17.6		17.9			16.6	14.4	16.6	16.3	16.0	16.2	15.8	16.0	16.8									
13.0	D	17.6	17.9		18.2		18.6			17.3	15.0	17.3	17.0	16.6	16.8	16.5	16.6	17.4									
10.2	E	14.6	14.9		15.2		15.5			14.2	12.0	14.2	13.9	13.6	13.8	13.4	13.6	14.4									
9.8	F	13.9	14.2		14.6		14.9			13.6	11.4	13.6	13.3	13.0	13.1	12.8	13.0	13.8									
13.9	G	18.6	18.9		19.2		19.5			18.2	16.0	18.2	17.9	17.6	17.8	17.4	17.6	18.4									
12.3	H	17.6	17.9		18.2		18.6			17.3	15.0	17.3	17.0	16.6	16.8	16.5	16.6	17.4									
3.2	I	8.5	8.8		9.1		9.4			8.2	5.9	8.2	7.8	7.5	7.7	7.4	7.5	8.3									
9.0	J	14.2	14.6		14.9		15.2			13.9	11.7	13.9	13.6	13.3	13.4	13.1	13.3	14.1									
12.5	K	16.0	16.3		16.6		17.0			15.7	13.4	15.7	15.4	15.0	15.2	14.9	15.0	15.8									
9.4	L	13.4	13.8		14.1		14.4			13.1	10.9	13.1	12.8	12.5	12.6	12.3	12.5	13.3									
14.7	M	20.0	20.3		20.6		21.0			19.7	17.4	19.7	19.4	19.0	19.2	18.9	19.0	19.8									
13.3	N	18.6	18.9		19.2		19.5			18.2	16.0	18.2	17.9	17.6	17.8	17.4	17.6	18.4									
14.9	O	19.5	19.8		20.2		20.5			19.2	17.0	19.2	18.9	18.6	18.7	18.4	18.6	19.4									
11.7	P	15.7	16.0		16.3		16.6			15.4	13.1	15.4	15.0	14.7	14.9	14.6	14.7	15.5									
14.9	Q	19.5	19.8		20.2		20.5			19.2	17.0	19.2	18.9	18.6	18.7	18.4	18.6	19.4									
12.0	R	16.5	16.8		17.1		17.4			16.2	13.9	16.2	15.8	15.5	15.7	15.4	15.5	16.3									
11.5	S	15.7	16.0		16.3		16.6			15.4	13.1	15.4	15.0	14.7	14.9	14.6	14.7	15.5									
11.5	T	15.2	15.5		15.8		16.2			14.9	12.6	14.9	14.6	14.2	14.4	14.1	14.2	15.0									
12.5	U	17.8	18.1		18.4		18.7			17.4	15.2	17.4	17.1	16.8	17.0	16.6	16.8	17.6									
13.6	V	17.1	17.4		17.8		18.1			16.8	14.6	16.8	16.5	16.2	16.3	16.0	16.2	17.0									
21.3	W	25.0	25.3		25.6		25.9			24.6	22.4	24.6	24.3	24.0	24.2	23.8	24.0	24.8									
13.8	X	17.1	17.4		17.8		18.1			16.8	14.6	16.8	16.5	16.2	16.3	16.0	16.2	17.0									
14.1	Y	17.3	17.6		17.9		18.2			17.0	14.7	17.0	16.6	16.3	16.5	16.2	16.3	17.1									
11.5	Z	15.7	16.0		16.3		16.6			15.4	13.1	15.4	15.0	14.7	14.9	14.6	14.7	15.5									

13.3" UPPER CASE to lower case

13.3		9.8	9.0	9.7	9.8	9.7	10.2	10.6	3.1	9.6	9.2	9.4	4.3	15.0	9.2	9.7	6.1	9.0	6.4	5.9	8.5	6.5	10.1	15.9	10.2	10.4	8.1
		a	c	d	e	g	o	q	i	b	h	k	l	m	n	p	r	c	f	j	s	t	v	w	x	y	z
12.5	A	15.4	15.7		16.0		16.2			15.2	13.3	15.2	14.9	14.6	14.8	14.5	14.6	15.3									
10.1	B	13.8	14.1		14.4		14.6			13.6	11.7	13.6	13.3	13.0	13.2	12.9	13.0	13.7									
10.9	C	14.1	14.4		14.6		14.9			13.8	12.0	13.8	13.6	13.3	13.4	13.2	13.3	14.0									
10.8	D	14.6	14.9		15.2		15.4			14.4	12.5	14.4	14.1	13.8	14.0	13.7	13.8	14.5									
8.5	E	12.1	12.4		12.6		12.9			11.8	10.0	11.8	11.6	11.3	11.4	11.2	11.3	12.0									
8.1	F	11.6	11.8		12.1		12.4			11.3	9.4	11.3	11.0	10.8	10.9	10.6	10.8	11.4									
11.6	G	15.4	15.7		16.0		16.2			15.2	13.3	15.2	14.9	14.6	14.8	14.5	14.6	15.3									
10.2	H	14.6	14.9		15.2		15.4			14.4	12.5	14.4	14.1	13.8	14.0	13.7	13.8	14.5									
2.7	I	7.0	7.3		7.6		7.8			6.8	4.9	6.8	6.5	6.3	6.4	6.1	6.3	6.9									
7.4	J	11.8	12.1		12.4		12.6			11.6	9.7	11.6	11.3	11.0	11.2	10.9	11.0	11.7									
10.4	K	13.3	13.6		13.8		14.1			13.0	11.2	13.0	12.8	12.5	12.6	12.4	12.5	13.2									
7.8	L	11.2	11.4		11.7		12.0			10.9	9.0	10.9	10.6	10.4	10.5	10.2	10.4	11.0									
12.2	M	16.6	16.9		17.2		17.4			16.4	14.5	16.4	16.1	15.8	16.0	15.7	15.8	16.5									
11.0	N	15.4	15.7		16.0		16.2			15.2	13.3	15.2	14.9	14.6	14.8	14.5	14.6	15.3									
12.4	O	16.2	16.5		16.8		17.0			16.0	14.1	16.0	15.7	15.4	15.6	15.3	15.4	16.1									
9.7	P	13.0	13.3		13.6		13.8			12.8	10.9	12.8	12.5	12.2	12.4	12.1	12.2	12.9									
12.4	Q	16.2	16.5		16.8		17.0			16.0	14.1	16.0	15.7	15.4	15.6	15.3	15.4	16.1									
10.0	R	13.7	14.0		14.2		14.5			13.4	11.6	13.4	13.2	12.9	13.0	12.8	12.9	13.6									
9.6	S	13.0	13.3		13.6		13.8			12.8	10.9	12.8	12.5	12.2	12.4	12.1	12.2	12.9									
9.6	T	12.6	12.9		13.2		13.4			12.4	10.5	12.4	12.1	11.8	12.0	11.7	11.8	12.5									
10.4	U	14.8	15.0		15.3		15.6			14.5	12.6	14.5	14.2	14.0	14.1	13.8	14.0	14.6									
11.3	V	14.2	14.5		14.8		15.0			14.0	12.1	14.0	13.7	13.4	13.6	13.3	13.4	14.1									
17.7	W	20.7	21.0		21.3		21.5			20.5	18.6	20.5	20.2	20.0	20.1	19.8	20.0	20.6									
11.4	X	14.2	14.5		14.8		15.0			14.0	12.1	14.0	13.7	13.4	13.6	13.3	13.4	14.1									
11.7	Y	14.4	14.6		14.9		15.2			14.1	12.2	14.1	13.8	13.6	13.7	13.4	13.6	14.2									
9.6	Z	13.0	13.3		13.6		13.8			12.8	10.9	12.8	12.5	12.2	12.4	12.1	12.2	12.9									

10.6" UPPER CASE to lower case

10.6		7.8	7.2	7.7	7.8	7.7	8.2	8.5	2.4	7.6	7.3	7.5	3.4	12.0	7.3	7.7	4.9	7.2	5.1	4.7	6.8	5.2	8.1	12.3	8.2	8.3	6.5
		a	c	d	e	g	o	q	i	b	h	k	l	m	n	p	r	c	f	j	s	t	v	w	x	y	z
10.0	A	12.3	12.5		12.7		12.9			12.1	10.6	12.1	11.9	11.7	11.8	11.6	11.7	12.2									
8.1	B	11.0	11.2		11.4		11.7			10.8	9.3	10.8	10.6	10.4	10.5	10.3	10.4	10.9									
8.7	C	11.2	11.4		11.7		11.9			11.0	9.5	11.0	10.8	10.6	10.7	10.5	10.6	11.1									
8.6	D	11.7	11.9		12.1		12.3			11.4	10.0	11.4	11.2	11.0	11.1	10.9	11.0	11.6									
6.8	E	9.6	9.9		10.1		10.3			9.4	8.0	9.4	9.2	9.0	9.1	8.9	9.0	9.5									
6.5	F	9.2	9.4		9.6		9.9			9.0	7.5	9.0	8.8	8.6	8.7	8.5	8.6	9.1									
9.2	G	12.3	12.5		12.7		12.9			12.1	10.6	12.1	11.9	11.7	11.8	11.6	11.7	12.2									
8.2	H	11.7	11.9		12.1		12.3			11.4	10.0	11.4	11.2	11.0	11.1	10.9	11.0	11.6									
2.1	I	5.6	5.8		6.0		6.3			5.4	3.9	5.4	5.2	5.0	5.1	4.9	5.0	5.5									
5.9	J	9.4	9.6		9.9		10.1			9.2	7.7	9.2	9.0	8.8	8.9	8.7	8.8	9.3									
8.3	K	10.6	10.8		11.0		11.2			10.4	8.9	10.4	10.2	10.0	10.1	9.9	10.0	10.5									
6.3	L	8.9	9.1		9.3		9.5			8.7	7.2	8.7	8.5	8.3	8.4	8.2	8.3	8.8									
9.8	M	13.3	13.5		13.7		13.9			13.0	11.6	13.0	12.8	12.6	12.7	12.5	12.6	13.1									
8.8	N	12.3	12.5		12.7		12.9			12.1	10.6	12.1	11.9	11.7	11.8	11.6	11.7	12.2									
9.9	O	12.9	13.1		13.4		13.6			12.7	11.2	12.7	12.5	12.3	12.4	12.2	12.3	12.8									
7.7	P	10.4	10.6		10.8		11.0			10.2	8.7	10.2	10.0	9.8	9.9	9.6	9.8	10.3									
9.9	Q	12.9	13.1		13.4		13.6			12.7	11.2	12.7	12.5	12.3	12.4	12.2	12.3	12.8									
8.0	R	10.9	11.1		11.3		11.6			10.7	9.2	10.7	10.5	10.3	10.4	10.2	10.3	10.8									
7.6	S	10.4	10.6		10.8		11.0			10.2	8.7	10.2	10.0	9.8	9.9	9.6	9.8	10.3									
7.6	T	10.1	10.3		10.5		10.7			9.9	8.4	9.9	9.6	9.4	9.5	9.3	9.4	10.0									
8.3	U	11.8	12.0		12.2		12.4			11.6	10.1	11.6	11.3	11.1	11.2	11.0	11.1	11.7									
9.0	V	11.3	11.6		11.8		12.0			11.1	9.6	11.1	10.9	10.7	10.8	10.6	10.7	11.2									
14.1	W	16.5	16.7		17.0		17.2			16.3	14.8	16.3	16.1	15.9	16.0	15.8	15.9	16.4									
9.1	X	11.3	11.6		11.8		12.0			11.1	9.6	11.1	10.9	10.7	10.8	10.6	10.7	11.2									
9.3	Y	11.4	11.7		11.9		12.1			11.2	9.8	11.2	11.0	10.8	10.9	10.7	10.8	11.3									
7.6	Z	10.4	10.6		10.8		11.0			10.2	8.7	10.2	10.0	9.8	9.9	9.6	9.8	10.3									

8" UPPER CASE to lower case

8		5.9	5.4	5.8	5.9	5.8	6.2	6.4	1.8	5.8	5.5	5.7	2.6	9.0	5.5	5.8	3.7	5.4	3.8	3.5	5.1	3.9	6.1	9.3	6.2	6.2	4.9
		a	c	d	e	g	o	q	i	b	h	k	l	m	n	p	r	c	f	j	s	t	v	w	x	y	z
7.5	A	9.3	9.4		9.6		9.8			9.1	8.0	9.1	9.0	8.8	8.9	8.7	8.8	9.2									
6.1	B	8.3	8.5		8.6		8.8			8.2	7.0	8.2	8.0	7.8	7.9	7.8	7.8	8.2									
6.6	C	8.5	8.6		8.8		9.0			8.3	7.2	8.3	8.2	8.0	8.1	7.9	8.0	8.4									
6.5	D	8.8	9.0		9.1		9.3			8.6	7.5	8.6	8.5	8.3	8.4	8.2	8.3	8.7									
5.1	E	7.3	7.4		7.6		7.8			7.1	6.0	7.1	7.0	6.8	6.9	6.7	6.8	7.2									
4.9	F	7.0	7.1		7.3		7.4			6.8	5.7	6.8	6.6	6.5	6.6	6.4	6.5	6.9									
7.0	G	9.3	9.4		9.6		9.8			9.1	8.0	9.1	9.0	8.8	8.9	8.7	8.8	9.2									
6.2	H	8.8	9.0		9.1		9.3			8.6	7.5	8.6	8.5	8.3	8.4	8.2	8.3	8.7									
1.6	I	4.2	4.4		4.6		4.7			4.1	3.0	4.1	3.9	3.8	3.8	3.7	3.8	4.2									
4.5	J	7.1	7.3		7.4		7.6			7.0	5.8	7.0	6.8	6.6	6.7	6.6	6.6	7.0									
6.2	K	8.0	8.2		8.3		8.5			7.8	6.7	7.8	7.7	7.5	7.6	7.4	7.5	7.9									
4.7	L	6.7	6.9		7.0		7.2			6.6	5.4	6.6	6.4	6.2	6.3	6.2	6.2	6.6									
7.4	M	10.0	10.2		10.3		10.5			9.8	8.7	9.8	9.7	9.5	9.6	9.4	9.5	9.9									
6.6	N	9.3	9.4		9.6		9.8			9.1	8.0	9.1	9.0	8.8	8.9	8.7	8.8	9.2									
7.4	O	9.8	9.9		10.1		10.2			9.6	8.5	9.6	9.4	9.3	9.4	9.2	9.3	9.7									
5.8	P	7.8	8.0		8.2		8.3			7.7	6.6	7.7	7.5	7.4	7.4	7.3	7.4	7.8									
7.4	Q	9.8	9.9		10.1		10.2			9.6	8.5	9.6	9.4	9.3	9.4	9.2	9.3	9.7									
6.0	R	8.2	8.4		8.6		8.7			8.1	7.0	8.1	7.9	7.8	7.8	7.7	7.8	8.2									
5.8	S	7.8	8.0		8.2		8.3			7.7	6.6	7.7	7.5	7.4	7.4	7.3	7.4	7.8									
5.8	T	7.6	7.8		7.9		8.1			7.4	6.3	7.4	7.3	7.1	7.2	7.0	7.1	7.5									
6.2	U	8.9	9.0		9.2		9.4			8.7	7.6	8.7	8.6	8.4	8.5	8.3	8.4	8.8									
6.8	V	8.6	8.7		8.9		9.0			8.4	7.3	8.4	8.2	8.1	8.2	8.0	8.1	8.5									
10.6	W	12.5	12.6		12.8		13.0			12.3	11.2	12.3	12.2	12.0	12.1	11.9	12.0	12.4									
6.9	X	8.6	8.7		8.9		9.0			8.4	7.3	8.4	8.2	8.1	8.2	8.0	8.1	8.5									
7.0	Y	8.6	8.8		9.0		9.1			8.5	7.4	8.5	8.3	8.2	8.2	8.1	8.2	8.6									
5.8	Z	7.8	8.0		8.2		8.3			7.7	6.6	7.7	7.5	7.4	7.4	7.3	7.4	7.8									

NOTE:

ALL DIMENSIONS ARE IN INCHES.

ENGLISH UNITS

COMMONWEALTH OF PENNSYLVANIA
DEPARTMENT OF TRANSPORTATION
BUREAU OF HIGHWAY SAFETY AND TRAFFIC ENGINEERING

SPACING CHARTS
DIRECT APPLIED LETTERS & NUMERALS

UPPER CASE & LOWER CASE
CLEARVIEW HIGHWAY 5W

RECOMMENDED MAY 25, 2007
Glen C Rowe
CHIEF, TRAFFIC ENGINEERING AND OPERATIONS DIVISION

RECOMMENDED MAY 25, 2007
M. C. Patel
CHIEF HIGHWAY ENGINEER

SHT. 8 OF 18

TC-8700C

20" lower case to lower case

20		a 14.8	c 13.6	e 14.8	g 14.6	o 15.4	q 16.0	d 14.6	i 4.6	b 14.4	h 13.8	k 14.2	l 6.4	m 22.6	n 13.8	p 14.6	r 9.2	u 13.6	f 9.6	j 8.8	s 12.8	t 9.8	v 15.2	w 23.2	x 15.4	y 15.6	z 12.2
14.8	a	20.0		20.4		20.4		20.8		21.2									19.6	16.8	19.6	19.2	18.8	19.0	18.6	18.8	19.8
14.4	b	20.0		20.4		20.4		20.8		21.2									19.6	16.8	19.6	19.2	18.8	19.0	18.6	18.8	19.8
13.6	c	18.2		18.6		18.6		19.0		19.4									17.8	15.0	17.8	17.4	17.0	17.2	16.8	17.0	18.0
14.6	d	21.0		21.4		21.4		21.8		22.2									20.6	17.8	20.6	20.2	19.8	20.0	19.6	19.8	20.8
14.8	e	20.4		20.8		20.8		21.2		21.6									20.0	17.2	20.0	19.6	19.2	19.4	19.0	19.2	20.2
9.6	f	14.2		14.6		14.6		15.0		15.4									13.8	11.0	13.8	13.4	13.0	13.2	12.8	13.0	14.0
14.6	g	21.0		21.4		21.4		21.8		22.2									20.6	17.8	20.6	20.2	19.8	20.0	19.6	19.8	20.8
13.8	h	20.2		20.6		20.6		21.0		21.4									19.8	17.0	19.8	19.4	19.0	19.2	18.8	19.0	20.0
4.6	i	10.6		11.0		11.0		11.4		11.8									10.2	7.4	10.2	9.8	9.4	9.6	9.2	9.4	10.4
8.8	j	14.8		15.2		15.2		15.6		16.0									14.4	11.6	14.4	14.0	13.6	13.8	13.4	13.6	14.6
14.2	k	18.2		18.6		18.6		19.0		19.4									17.8	15.0	17.8	17.4	17.0	17.2	16.8	17.0	18.0
6.4	l	11.2		11.6		11.6		12.0		12.4									10.8	8.0	10.8	10.4	10.0	10.2	9.8	10.0	11.0
22.6	m	29.0		29.4		29.4		29.8		30.2									28.6	25.8	28.6	28.2	27.8	28.0	27.6	27.8	28.8
13.8	n	20.2		20.6		20.6		21.0		21.4									19.8	17.0	19.8	19.4	19.0	19.2	18.8	19.0	20.0
15.4	o	21.0		21.4		21.4		21.8		22.2									20.6	17.8	20.6	20.2	19.8	20.0	19.6	19.8	20.8
14.6	p	20.2		20.6		20.6		21.0		21.4									19.8	17.0	19.8	19.4	19.0	19.2	18.8	19.0	20.0
16.0	q	21.0		21.4		21.4		21.8		22.2									20.6	17.8	20.6	20.2	19.8	20.0	19.6	19.8	20.8
9.2	r	13.8		14.2		14.2		14.6		15.0									13.4	10.6	13.4	13.0	12.6	12.8	12.4	12.6	13.6
12.8	s	18.0		18.4		18.4		18.8		19.2									17.6	14.8	17.6	17.2	16.8	17.0	16.6	16.8	17.8
9.8	t	14.6		15.0		15.0		15.4		15.8									14.2	11.4	14.2	13.8	13.4	13.6	13.2	13.4	14.4
13.6	u	20.0		20.4		20.4		20.8		21.2									19.6	16.8	19.6	19.2	18.8	19.0	18.6	18.8	19.8
15.2	v	19.2		19.6		19.6		20.0		20.4									18.8	16.0	18.8	18.4	18.0	18.2	17.8	18.0	19.0
23.2	w	27.4		27.8		27.8		28.2		28.6									27.0	24.2	27.0	26.6	26.2	26.4	26.0	26.2	27.2
15.4	x	19.2		19.6		19.6		20.0		20.4									18.8	16.0	18.8	18.4	18.0	18.2	17.8	18.0	19.0
15.6	y	19.6		20.0		20.0		20.4		20.8									19.2	16.4	19.2	18.8	18.4	18.6	18.2	18.4	19.4
12.2	z	17.2		17.6		17.6		18.0		18.4									16.8	14.0	16.8	16.4	16.0	16.2	15.8	16.0	17.0

16" lower case to lower case

16		a 11.8	c 10.9	e 11.8	g 11.7	o 12.3	q 12.8	d 11.7	i 3.7	b 11.5	h 11.0	k 11.4	l 5.1	m 18.1	n 11.0	p 11.7	r 7.4	u 10.9	f 7.7	j 7.0	s 10.2	t 7.8	v 12.2	w 18.6	x 12.3	y 12.5	z 9.8
11.8	a	16.0		16.3		16.3		16.6		17.0									15.7	13.4	15.7	15.4	15.0	15.2	14.9	15.0	15.8
11.5	b	16.0		16.3		16.3		16.6		17.0									15.7	13.4	15.7	15.4	15.0	15.2	14.9	15.0	15.8
10.9	c	14.6		14.9		14.9		15.2		15.5									14.2	12.0	14.2	13.9	13.6	13.8	13.4	13.6	14.4
11.7	d	16.8		17.1		17.1		17.4		17.8									16.5	14.2	16.5	16.2	15.8	16.0	15.7	15.8	16.6
11.8	e	16.3		16.6		16.6		17.0		17.3									16.0	13.8	16.0	15.7	15.4	15.5	15.2	15.4	16.2
7.7	f	11.4		11.7		11.7		12.0		12.3									11.0	8.8	11.0	10.7	10.4	10.6	10.2	10.4	11.2
11.7	g	16.8		17.1		17.1		17.4		17.8									16.5	14.2	16.5	16.2	15.8	16.0	15.7	15.8	16.6
11.0	h	16.2		16.5		16.5		16.8		17.1									15.8	13.6	15.8	15.5	15.2	15.4	15.0	15.2	16.0
3.7	i	8.5		8.8		8.8		9.1		9.4									8.2	5.9	8.2	7.8	7.5	7.7	7.4	7.5	8.3
7.0	j	11.8		12.2		12.2		12.5		12.8									11.5	9.3	11.5	11.2	10.9	11.0	10.7	10.9	11.7
11.4	k	14.6		14.9		14.9		15.2		15.5									14.2	12.0	14.2	13.9	13.6	13.8	13.4	13.6	14.4
5.1	l	9.0		9.3		9.3		9.6		9.9									8.6	6.4	8.6	8.3	8.0	8.2	7.8	8.0	8.8
18.1	m	23.2		23.5		23.5		23.8		24.2									22.9	20.6	22.9	22.6	22.2	22.4	22.1	22.2	23.0
11.0	n	16.2		16.5		16.5		16.8		17.1									15.8	13.6	15.8	15.5	15.2	15.4	15.0	15.2	16.0
12.3	o	16.8		17.1		17.1		17.4		17.8									16.5	14.2	16.5	16.2	15.8	16.0	15.7	15.8	16.6
11.7	p	16.2		16.5		16.5		16.8		17.1									15.8	13.6	15.8	15.5	15.2	15.4	15.0	15.2	16.0
12.8	q	16.8		17.1		17.1		17.4		17.8									16.5	14.2	16.5	16.2	15.8	16.0	15.7	15.8	16.6
7.4	r	11.0		11.4		11.4		11.7		12.0									10.7	8.5	10.7	10.4	10.1	10.2	9.9	10.1	10.9
10.2	s	14.4		14.7		14.7		15.0		15.4									14.1	11.8	14.1	13.8	13.4	13.6	13.3	13.4	14.2
7.8	t	11.7		12.0		12.0		12.3		12.6									11.4	9.1	11.4	11.0	10.7	10.9	10.6	10.7	11.5
10.9	u	16.0		16.3		16.3		16.6		17.0									15.7	13.4	15.7	15.4	15.0	15.2	14.9	15.0	15.8
12.2	v	15.4		15.7		15.7		16.0		16.3									15.0	12.8	15.0	14.7	14.4	14.6	14.2	14.4	15.2
18.6	w	21.9		22.2		22.2		22.6		22.9									21.6	19.4	21.6	21.3	21.0	21.1	20.8	21.0	21.8
12.3	x	15.4		15.7		15.7		16.0		16.3									15.0	12.8	15.0	14.7	14.4	14.6	14.2	14.4	15.2
12.5	y	15.7		16.0		16.0		16.3		16.6									15.4	13.1	15.4	15.0	14.7	14.9	14.6	14.7	15.5
9.8	z	13.8		14.1		14.1		14.4		14.7									13.4	11.2	13.4	13.1	12.8	13.0	12.6	12.8	13.6

13.3" lower case to lower case

13.3		a 9.8	c 9.0	e 9.8	g 9.7	o 10.2	q 10.6	d 9.7	i 3.1	b 9.6	h 9.2	k 9.4	l 4.3	m 15.0	n 9.2	p 9.7	r 6.1	u 9.0	f 6.4	j 5.9	s 8.5	t 6.5	v 10.1	w 15.4	x 10.2	y 10.4	z 8.1
9.8	a	13.3		13.6		13.6		13.8		14.1									13.0	11.2	13.0	12.8	12.5	12.6	12.4	12.5	13.2
9.6	b	13.3		13.6		13.6		13.8		14.1									13.0	11.2	13.0	12.8	12.5	12.6	12.4	12.5	13.2
9.0	c	12.1		12.4		12.4		12.6		12.9									11.8	10.0	11.8	11.6	11.3	11.4	11.2	11.3	12.0
9.7	d	14.0		14.2		14.2		14.5		14.8									13.7	11.8	13.7	13.4	13.2	13.3	13.0	13.2	13.8
9.8	e	13.6		13.8		13.8		14.1		14.4									13.3	11.4	13.3	13.0	12.8	12.9	12.6	12.8	13.4
6.4	f	9.4		9.7		9.7		10.0		10.2									9.2	7.3	9.2	8.9	8.6	8.8	8.5	8.6	9.3
9.7	g	14.0		14.2		14.2		14.5		14.8									13.7	11.8	13.7	13.4	13.2	13.3	13.0	13.2	13.8
9.2	h	13.4		13.7		13.7		14.0		14.2									13.2	11.3	13.2	12.9	12.6	12.8	12.5	12.6	13.3
3.1	i	7.0		7.3		7.3		7.6		7.8									6.8	4.9	6.8	6.5	6.3	6.4	6.1	6.3	6.9
5.9	j	9.8		10.1		10.1		10.4		10.6									9.6	7.7	9.6	9.3	9.0	9.2	8.9	9.0	9.7
9.4	k	12.1		12.4		12.4		12.6		12.9									11.8	10.0	11.8	11.6	11.3	11.4	11.2	11.3	12.0
4.3	l	7.4		7.7		7.7		8.0		8.2									7.2	5.3	7.2	6.9	6.7	6.8	6.5	6.7	7.3
15.0	m	19.3		19.6		19.6		19.8		20.1									19.0	17.2	19.0	18.8	18.5	18.6	18.4	18.5	19.2
9.2	n	13.4		13.7		13.7		14.0		14.2									13.2	11.3	13.2	12.9	12.6	12.8	12.5	12.6	13.3
10.2	o	14.0		14.2		14.2		14.5		14.8									13.7	11.8	13.7	13.4	13.2	13.3	13.0	13.2	13.8
9.7	p	13.4		13.7		13.7		14.0		14.2									13.2	11.3	13.2	12.9	12.6	12.8	12.5	12.6	13.3
10.6	q	14.0		14.2		14.2		14.5		14.8									13.7	11.8	13.7	13.4	13.2	13.3	13.0	13.2	13.8
6.1	r	9.2		9.4		9.4		9.7		10.0									8.9	7.0	8.9	8.6	8.4	8.5	8.2	8.4	9.0
8.5	s	12.0		12.2		12.2		12.5		12.8									11.7	9.8	11.7	11.4	11.2	11.3	11.0	11.2	11.8
6.5	t	9.7		10.0		10.0		10.2		10.5									9.4	7.6	9.4	9.2	8.9	9.0	8.8	8.9	9.6
9.0	u	13.3		13.6		13.6		13.8		14.1									13.0	11.2	13.0	12.8	12.5	12.6	12.4	12.5	13.2
10.1	v	12.8		13.0		13.0		13.3		13.6									12.5	10.6	12.5	12.2	12.0	12.1	11.8	12.0	12.6
15.4	w	18.2		18.5		18.5		18.8		19.0									18.0	16.1	18.0	17.7	17.4	17.6	17.3	17.4	18.1
10.2	x	12.8		13.0		13.0		13.3		13.6									12.5	10.6	12.5	12.2	12.0	12.1	11.8	12.0	12.6
10.4	y	13.0		13.3		13.3		13.6		13.8									12.8	10.9	12.8	12.5	12.2	12.4	12.1	12.2	12.9
8.1	z	11.4		11.7		11.7		12.0		12.2									11.2	9.3	11.2	10.9	10.6	10.8	10.5	10.6	11.3

10.6" lower case to lower case

10.6		a 7.8	c 7.2	e 7.8	g 7.7	o 8.2	q 8.5	d 7.7	i 2.4	b 7.6	h 7.3	k 7.5	l 3.4	m 12.0	n 7.3	p 7.7	r 4.9	u 7.2	f 5.1	j 4.7	s 6.8	t 5.2	v 8.1	w 12.3	x 8.2	y 8.3	z 6.5
7.8	a	10.6		10.8		10.8		10.9		11.2									10.4	8.9	10.4	10.2	10.0	10.1	9.9	10.0	10.5
7.6	b	10.6		10.8		10.8		10.9		11.2									10.4	8.9	10.4	10.2	10.0	10.1	9.9	10.0	10.5
7.2	c	9.6		9.9		9.9		10.0		10.3									9.4	8.0	9.4	9.2	9.0	9.1	8.9	9.0	9.5
7.7	d	11.1		11.3		11.3		11.4		11.8									10.9	9.4	10.9	10.7	10.5	10.6	10.4	10.5	11.0
7.8	e	10.8		11.0		11.0		11.1		11.4									10.6	9.1	10.6	10.4	10.2	10.3	10.1	10.2	10.7
5.1	f	7.5		7.7		7.7		7.9		8.2									7.3	5.8	7.3	7.1	6.9	7.0	6.8	6.9	7.4
7.7	g	11.1		11.3		11.3		11.4		11.8									10.9	9.4	10.9	10.7	10.5	10.6	10.4	10.5	11.0
7.3	h	10.7		10.9		10.9		11.0		11.3									10.5	9.0	10.5	10.3	10.1	10.2	10.0	10.1	10.6
2.4	i	5.6		5.8		5.8		6.0		6.3									5.4	3.9	5.4	5.2	5.0	5.1	4.9	5.0	5.5
4.7	j	7.8		8.1		8.1		8.2		8.5									7.6	6.1	7.6	7.4	7.2	7.3	7.1	7.2	7.7
7.5	k	9.6		9.9		9.9		10.0		10.3									9.4	8.0	9.4	9.2	9.0	9.1	8.9	9.0	9.5
3.4	l	5.9		6.1		6.1		6.3		6.6									5.7	4.2	5.7	5.5	5.3	5.4	5.2	5.3	5.8
12.0	m	15.4		15.6		15.6		15.6		16.0									15.2	13.7	15.2	14.9	14.7	14.8	14.6	14.7	15.3
7.3	n	10.7		10.9		10.9		11.0		11.3									10.5	9.0	10.5	10.3	10.1	10.2	10.0	10.1	10.6
8.2	o	11.1		11.3		11.3		11.4		11.8									10.9	9.4	10.9	10.7	10.5	10.6	10.4	10.5	11.0
7.7	p	10.7		10.9		10.9		11.0		11.3									10.5	9.0	10.5	10.3	10.1	10.2	10.0	10.1	10.6
8.5	q	11.1		11.3		11.3		11.4		11.8									10.9	9.4	10.9	10.7	10.5	10.6	10.4	10.5	11.0
4.9	r	7.3		7.5		7.5		7.7		8.0									7.1	5.6	7.1	6.9	6.7	6.8	6.6	6.7	7.2
6.8	s	9.5		9.8		9.8		9.9		10.2									9.3	7.8	9.3	9.1	8.9	9.0	8.8	8.9	9.4
5.2	t	7.7		8.0		8.0		8.1		8.4									7.5	6.0	7.5	7.3	7.1	7.2	7.0	7.1	7.6
7.2	u	10.6		10.8		10.8		10.9		11.2									10.4	8.9	10.4	10.2	10.0	10.1	9.9	10.0	10.5
8.1	v	10.2		10.4		10.4		10.5		10.8									10.0	8.5	10.0	9.8	9.5	9.6	9.4	9.5	10.1
12.3	w	14.5		14.7		14.7		14.8		15.2									14.3	12.8	14.3	14.1	13.9	14.0	13.8	13.9	14.4
8.2	x	10.2		10.4		10.4		10.5		10.8									10.0	8.5	10.0	9.8	9.5	9.6	9.4	9.5	10.1
8.3	y	10.4		10.6		10.6		10.7		11.0									10.2	8.7	10.2	10.0	9.8	9.9	9.6	9.8	10.3
6.5	z	9.1		9.3		9.3		9.4		9.8									8.9	7.4	8.9	8.7	8.5	8.6	8.4	8.5	9.0

8" lower case to lower case

8		a 5.9	c 5.4	e 5.9	g 5.8	o 6.2	q 6.4	d 5.8	i 1.8	b 5.8	h 5.5	k 5.7	l 2.6	m 9.0	n 5.5	p 5.8	r 3.7	u 5.4	f 3.8	j 3.5	s 5.1	t 3.9	v 6.1	w 9.3	x 6.2	y 6.2	z 4.9
5.9	a	8.0		8.2		8.2		8.3		8.5									7.8	6.7	7.8	7.7	7.5	7.6	7.4	7.5	7.9
5.8	b	8.0		8.2		8.2		8.3		8.5									7.8	6.7	7.8	7.7	7.5	7.6	7.4	7.5	7.9
5.4	c	7.3		7.4		7.4		7.6		7.8									7.1	6.0	7.1	7.0	6.8	6.9	6.7	6.8	7.2
5.8	d	8.4		8.6		8.6		8.7		8.9									8.2	7.1	8.2	8.1	7.9	8.0	7.8	7.9	8.3
5.9	e	8.2		8.3		8.3		8.5		8.6									8.0	6.9	8.0	7.8	7.7	7.8	7.6	7.7	8.1
3.8	f	5.7		5.8		5.8		6.0		6.2									5.5	4.4	5.5	5.4	5.2	5.3	5.1	5.2	5.6
5.8	g	8.4		8.6		8.6		8.7		8.9									8.2	7.1	8.2	8.1	7.9	8.0	7.8	7.9	8.3
5.5	h	8.1		8.2		8.2		8.4		8.6									7.9	6.8	7.9	7.8	7.6	7.7	7.5	7.6	8.0
1.8	i	4.2		4.4		4.4		4.6		4.7									4.1	3.0	4.1	3.9	3.8	3.8	3.7	3.8	4.2
3.5	j	5.9		6.1		6.1		6.2		6.4									5.8	4.6	5.8	5.6	5.4	5.5	5.4	5.4	5.8
5.7	k	7.3		7.4		7.4		7.6		7.8									7.1	6.0	7.1	7.0	6.8	6.9	6.7	6.8	7.2
2.6	l	4.5		4.6		4.6		4.8		5.0									4.3	3.2	4.3	4.2	4.0	4.1	3.9	4.0	4.4
9.0	m	11.6		11.8		11.8		11.9		12.1									11.4	10.3	11.4	11.3	11.1	11.2	11.0	11.1	11.5
5.5	n	8.1		8.2		8.2		8.4		8.6									7.9	6.8	7.9	7.8	7.6	7.7	7.5	7.6	8.0
6.2	o	8.4		8.6		8.6		8.7		8.9									8.2	7.1	8.2	8.1	7.9	8.0	7.8	7.9	8.3
5.8	p	8.1		8.2		8.2		8.4		8.6									7.9	6.8	7.9	7.8	7.6	7.7	7.5	7.6	8.0
6.4	q	8.4		8.6		8.6		8.7		8.9									8.2	7.1	8.2	8.1	7.9	8.0	7.8	7.9	8.3
3.7	r	5.5		5.7		5.7		5.8		6.0									5.4	4.2	5.4	5.2	5.0	5.1	5.0	5.0	5.4
5.1	s	7.2		7.4		7.4		7.5		7.7									7.0	5.9	7.0	6.9	6.7	6.8	6.6	6.7	7.1
3.9	t	5.8		6.0		6.0		6.2		6.3									5.7	4.6	5.7	5.5	5.4	5.4	5.3	5.4	5.8
5.4	u	8.0		8.2		8.2		8.3		8.5									7.8	6.7	7.8	7.7	7.5	7.6	7.4	7.5	7.9
6.1	v	7.7		7.8		7.8		8.0		8.2									7.5	6.4	7.5	7.4	7.2	7.3	7.1	7.2	7.6
9.3	w	11.0		11.1		11.1		11.3		11.4									10.8	9.7	10.8	10.6	10.5	10.6	10.4	10.5	10.9
6.2	x	7.7		7.8		7.8		8.0		8.2									7.5	6.4	7.5	7.4	7.2	7.3	7.1	7.2	7.6
6.2	y	7.8		8.0		8.0		8.2		8.3									7.7	6.6	7.7	7.5	7.4	7.4	7.3	7.4	7.8
4.9	z	6.9		7.0		7.0		7.2		7.4									6.7	5.6	6.7	6.6	6.4	6.5	6.3	6.4	6.8

NOTE:

ALL DIMENSIONS ARE IN INCHES.

ENGLISH UNITS

COMMONWEALTH OF PENNSYLVANIA
DEPARTMENT OF TRANSPORTATION
BUREAU OF HIGHWAY SAFETY AND TRAFFIC ENGINEERING

SPACING CHARTS
DIRECT APPLIED LETTERS & NUMERALS

LOWER CASE
CLEARVIEW HIGHWAY 5W

RECOMMENDED MAY 25, 2007
Glenn C Rowe
CHIEF, TRAFFIC ENGINEERING AND OPERATIONS DIVISION

RECOMMENDED MAY 25, 2007
M. C. Patel
CHIEF HIGHWAY ENGINEER

SHT. 9 OF 18

TC-8700C

20" UPPER CASE to lower case

20		a 14.8	c 13.6	d 14.6	e 14.8	g 14.6	o 15.4	q 16.0	i 4.6	b 14.4	h 13.8	k 14.2	l 6.4	m 22.6	n 13.8	p 14.6	r 9.2	u 13.6	f 9.6	j 8.8	s 12.8	t 9.8	v 15.2	w 23.2	x 15.4	y 15.6	z 12.2
18.8	A	22.0	22.4						22.8	23.2									21.6	18.8	21.4	21.2	20.8	21.0	20.6	20.8	21.8
15.2	B	19.6	20.0						20.4	20.8									19.2	16.4	19.0	18.8	18.4	18.6	18.2	18.4	19.4
16.4	C	20.0	20.4						20.8	21.2									19.6	16.8	19.4	19.2	18.8	19.0	18.6	18.8	19.8
16.2	D	20.8	21.2						21.6	22.0									20.4	17.6	20.2	20.0	19.6	19.8	19.4	19.6	20.6
12.8	E	17.0	17.4						17.8	18.2									16.6	13.8	16.4	16.2	15.8	16.0	15.6	15.8	16.8
12.2	F	16.2	16.6						17.0	17.4									15.8	13.0	15.6	15.4	15.0	15.2	14.8	15.0	16.0
17.4	G	22.0	22.4						22.8	23.2									21.6	18.8	21.4	21.2	20.8	21.0	20.6	20.8	21.8
15.4	H	21.4	21.8						22.2	22.6									21.0	18.2	20.8	20.6	20.2	20.4	20.0	20.2	21.2
4.0	I	9.4	9.8						10.2	10.6									9.0	6.2	8.8	8.6	8.2	8.4	8.0	8.2	9.2
11.2	J	16.6	17.0						17.4	17.8									16.2	13.4	16.0	15.8	15.4	15.6	15.2	15.4	16.4
15.6	K	18.8	19.2						19.6	20.0									18.4	15.6	18.2	18.0	17.6	17.8	17.4	17.6	18.6
11.8	L	15.6	16.0						16.4	16.8									15.2	12.4	15.0	14.8	14.4	14.6	14.2	14.4	15.4
18.4	M	23.8	24.2						24.6	25.0									23.4	20.6	23.2	23.0	22.6	22.8	22.4	22.6	23.6
16.6	N	22.0	22.4						22.8	23.2									21.6	18.8	21.4	21.2	20.8	21.0	20.6	20.8	21.8
18.6	O	23.2	23.6						24.0	24.4									22.8	20.0	22.6	22.4	22.0	22.2	21.8	22.0	23.0
14.6	P	18.4	18.8						19.2	19.6									18.0	15.2	17.8	17.6	17.2	17.4	17.0	17.2	18.2
18.6	Q	23.2	23.6						24.0	24.4									22.8	20.0	22.6	22.4	22.0	22.2	21.8	22.0	23.0
15.0	R	19.4	19.8						20.2	20.6									19.0	16.2	18.8	18.6	18.2	18.4	18.0	18.2	19.2
14.4	S	18.4	18.8						19.2	19.6									18.0	15.2	17.8	17.6	17.2	17.4	17.0	17.2	18.2
14.4	T	17.8	18.2						18.6	19.0									17.4	14.6	17.2	17.0	16.6	16.8	16.4	16.6	17.6
15.6	U	21.0	21.4						21.8	22.2									20.6	17.8	20.4	20.2	19.8	20.0	19.6	19.8	20.8
17.0	V	20.2	20.6						21.0	21.4									19.8	17.0	19.6	19.4	19.0	19.2	18.8	19.0	20.0
26.6	W	30.0	30.4						30.8	31.2									29.6	26.8	29.4	29.2	28.8	29.0	28.6	28.8	29.8
17.2	X	20.2	20.6						21.0	21.4									19.8	17.0	19.6	19.4	19.0	19.2	18.8	19.0	20.0
17.6	Y	20.4	20.8						21.2	21.6									20.0	17.2	19.8	19.6	19.2	19.4	19.0	19.2	20.2
14.4	Z	18.4	18.8						19.2	19.6									18.0	15.2	17.8	17.6	17.2	17.4	17.0	17.2	18.2

16" UPPER CASE to lower case

16		a 11.8	c 10.9	d 11.7	e 11.8	g 11.7	o 12.3	q 12.8	i 3.7	b 11.5	h 11.0	k 11.4	l 5.1	m 18.1	n 11.0	p 11.7	r 7.4	u 10.9	f 7.7	j 7.0	s 10.2	t 7.8	v 12.2	w 18.6	x 12.3	y 12.5	z 9.8
15.0	A	17.6	17.9						18.2	18.6									17.3	15.0	17.1	17.0	16.6	16.8	16.5	16.6	17.4
12.2	B	15.7	16.0						16.3	16.6									15.4	13.1	15.2	15.0	14.7	14.9	14.6	14.7	15.5
13.1	C	16.0	16.3						16.6	17.0									15.7	13.4	15.5	15.4	15.0	15.2	14.9	15.0	15.8
13.0	D	16.6	17.0						17.3	17.6									16.3	14.1	16.2	16.0	15.7	15.8	15.5	15.7	16.5
10.2	E	13.6	13.9						14.2	14.6									13.3	11.0	13.1	13.0	12.6	12.8	12.5	12.6	13.4
9.8	F	13.0	13.3						13.6	13.9									12.6	10.4	12.5	12.3	12.0	12.2	11.8	12.0	12.8
13.9	G	17.6	17.9						18.2	18.6									17.3	15.0	17.1	17.0	16.6	16.8	16.5	16.6	17.4
12.3	H	17.1	17.4						17.8	18.1									16.8	14.6	16.6	16.5	16.2	16.3	16.0	16.2	17.0
3.2	I	7.5	7.8						8.2	8.5									7.2	5.0	7.0	6.9	6.6	6.7	6.4	6.6	7.4
9.0	J	13.3	13.6						13.9	14.2									13.0	10.7	12.8	12.6	12.3	12.5	12.2	12.3	13.1
12.5	K	15.0	15.4						15.7	16.0									14.7	12.5	14.6	14.4	14.1	14.2	13.9	14.1	14.9
9.4	L	12.5	12.8						13.1	13.4									12.2	9.9	12.0	11.8	11.5	11.7	11.4	11.5	12.3
14.7	M	19.0	19.4						19.7	20.0									18.7	16.5	18.6	18.4	18.1	18.2	17.9	18.1	18.9
13.3	N	17.6	17.9						18.2	18.6									17.3	15.0	17.1	17.0	16.6	16.8	16.5	16.6	17.4
14.9	O	18.6	18.9						19.2	19.5									18.2	16.0	18.1	17.9	17.6	17.8	17.4	17.6	18.4
11.7	P	14.7	15.0						15.4	15.7									14.4	12.2	14.2	14.1	13.8	13.9	13.6	13.8	14.6
14.9	Q	18.6	18.9						19.2	19.5									18.2	16.0	18.1	17.9	17.6	17.8	17.4	17.6	18.4
12.0	R	15.5	15.8						16.2	16.5									15.2	13.0	15.0	14.9	14.6	14.7	14.4	14.6	15.4
11.5	S	14.7	15.0						15.4	15.7									14.4	12.2	14.2	14.1	13.8	13.9	13.6	13.8	14.6
11.5	T	14.2	14.6						14.9	15.2									13.9	11.7	13.8	13.6	13.3	13.4	13.1	13.3	14.1
12.5	U	16.8	17.1						17.4	17.8									16.5	14.2	16.3	16.2	15.8	16.0	15.7	15.8	16.6
13.6	V	16.2	16.5						16.8	17.1									15.8	13.6	15.7	15.5	15.2	15.4	15.0	15.2	16.0
21.3	W	24.0	24.3						24.6	25.0									23.7	21.4	23.5	23.4	23.0	23.2	22.9	23.0	23.8
13.8	X	16.2	16.5						16.8	17.1									15.8	13.6	15.7	15.5	15.2	15.4	15.0	15.2	16.0
14.1	Y	16.3	16.6						17.0	17.3									16.0	13.8	15.8	15.7	15.4	15.5	15.2	15.4	16.2
11.5	Z	14.7	15.0						15.4	15.7									14.4	12.2	14.2	14.1	13.8	13.9	13.6	13.8	14.6

13.3" UPPER CASE to lower case

13.3		a 9.8	c 9.0	d 9.7	e 9.8	g 9.7	o 10.2	q 10.6	i 3.1	b 9.6	h 9.2	k 9.4	l 4.3	m 15.0	n 9.2	p 9.7	r 6.1	u 9.0	f 6.4	j 5.9	s 8.5	t 6.5	v 10.1	w 15.9	x 10.2	y 10.4	z 8.1
12.5	A	14.6	14.9						15.2	15.4									14.4	12.5	14.2	14.1	13.8	14.0	13.7	13.8	14.5
10.1	B	13.0	13.3						13.6	13.8									12.8	10.9	12.6	12.5	12.2	12.4	12.1	12.2	12.9
10.9	C	13.3	13.6						13.8	14.1									13.0	11.2	12.9	12.8	12.5	12.6	12.4	12.5	13.2
10.8	D	13.8	14.1						14.4	14.6									13.6	11.7	13.4	13.3	13.0	13.2	12.9	13.0	13.7
8.5	E	11.3	11.6						11.8	12.1									11.0	9.2	10.9	10.8	10.5	10.6	10.4	10.5	11.2
8.1	F	10.8	11.0						11.3	11.6									10.5	8.6	10.4	10.2	10.0	10.1	9.8	10.0	10.6
11.6	G	14.6	14.9						15.2	15.4									14.4	12.5	14.2	14.1	13.8	14.0	13.7	13.8	14.5
10.2	H	14.2	14.5						14.8	15.0									14.0	12.1	13.8	13.7	13.4	13.6	13.3	13.4	14.1
2.7	I	6.3	6.5						6.8	7.0									6.0	4.1	5.9	5.7	5.5	5.6	5.3	5.5	6.1
7.4	J	11.0	11.3						11.6	11.8									10.8	8.9	10.6	10.5	10.2	10.4	10.1	10.2	10.9
10.4	K	12.5	12.8						13.0	13.3									12.2	10.4	12.1	12.0	11.7	11.8	11.6	11.7	12.4
7.8	L	10.4	10.6						10.9	11.2									10.1	8.2	10.0	9.8	9.6	9.7	9.4	9.6	10.2
12.2	M	15.8	16.1						16.4	16.6									15.6	13.7	15.4	15.3	15.0	15.2	14.9	15.0	15.7
11.0	N	14.6	14.9						15.2	15.4									14.4	12.5	14.2	14.1	13.8	14.0	13.7	13.8	14.5
12.4	O	15.4	15.7						16.0	16.2									15.2	13.3	15.0	14.9	14.6	14.8	14.5	14.6	15.3
9.7	P	12.2	12.5						12.8	13.0									12.0	10.1	11.8	11.7	11.4	11.6	11.3	11.4	12.1
12.4	Q	15.4	15.7						16.0	16.2									15.2	13.3	15.0	14.9	14.6	14.8	14.5	14.6	15.3
10.0	R	12.9	13.2						13.4	13.7									12.6	10.8	12.5	12.4	12.1	12.2	12.0	12.1	12.8
9.6	S	12.2	12.5						12.8	13.0									12.0	10.1	11.8	11.7	11.4	11.6	11.3	11.4	12.1
9.6	T	11.8	12.1						12.4	12.6									11.6	9.7	11.4	11.3	11.0	11.2	10.9	11.0	11.7
10.4	U	14.0	14.2						14.5	14.8									13.7	11.8	13.6	13.4	13.2	13.3	13.0	13.2	13.8
11.3	V	13.4	13.7						14.0	14.2									13.2	11.3	13.0	12.9	12.6	12.8	12.5	12.6	13.3
17.7	W	20.0	20.2						20.5	20.7									19.7	17.8	19.6	19.4	19.2	19.3	19.0	19.2	19.8
11.4	X	13.4	13.7						14.0	14.2									13.2	11.3	13.0	12.9	12.6	12.8	12.5	12.6	13.3
11.7	Y	13.6	13.8						14.1	14.4									13.3	11.4	13.2	13.0	12.8	12.9	12.6	12.8	13.4
9.6	Z	12.2	12.5						12.8	13.0									12.0	10.1	11.8	11.7	11.4	11.6	11.3	11.4	12.1

10.6" UPPER CASE to lower case

10.6		a 7.8	c 7.2	d 7.7	e 7.8	g 7.7	o 8.2	q 8.5	i 2.4	b 7.6	h 7.3	k 7.5	l 3.4	m 12.0	n 7.3	p 7.7	r 4.9	u 7.2	f 5.1	j 4.7	s 6.8	t 5.2	v 8.1	w 12.3	x 8.2	y 8.3	z 6.5
10.0	A	11.7	11.9						12.1	12.3									11.4	10.0	11.3	11.2	11.0	11.1	10.9	11.0	11.6
8.1	B	10.4	10.6						10.8	11.0									10.2	8.7	10.1	10.0	9.8	9.9	9.6	9.8	10.3
8.7	C	10.6	10.8						11.0	11.2									10.4	8.9	10.3	10.2	10.0	10.1	9.9	10.0	10.5
8.6	D	11.0	11.2						11.4	11.7									10.8	9.3	10.7	10.6	10.4	10.5	10.3	10.4	10.9
6.8	E	9.0	9.2						9.4	9.6									8.8	7.3	8.7	8.6	8.4	8.5	8.3	8.4	8.9
6.5	F	8.6	8.8						9.0	9.2									8.4	6.9	8.3	8.2	8.0	8.1	7.8	8.0	8.5
9.2	G	11.7	11.9						12.1	12.3									11.4	10.0	11.3	11.2	11.0	11.1	10.9	11.0	11.6
8.2	H	11.3	11.6						11.8	12.0									11.1	9.6	11.0	10.9	10.7	10.8	10.6	10.7	11.2
2.1	I	5.0	5.2						5.4	5.6									4.8	3.3	4.7	4.6	4.3	4.5	4.2	4.3	4.9
5.9	J	8.8	9.0						9.2	9.4									8.6	7.1	8.5	8.4	8.2	8.3	8.1	8.2	8.7
8.3	K	10.0	10.2						10.4	10.6									9.8	8.3	9.6	9.5	9.3	9.4	9.2	9.3	9.9
6.3	L	8.3	8.5						8.7	8.9									8.1	6.6	8.0	7.8	7.6	7.7	7.5	7.6	8.2
9.8	M	12.6	12.8						13.0	13.3									12.4	10.9	12.3	12.2	12.0	12.1	11.9	12.0	12.5
8.8	N	11.7	11.9						12.1	12.3									11.4	10.0	11.3	11.2	11.0	11.1	10.9	11.0	11.6
9.9	O	12.3	12.5						12.7	12.9									12.1	10.6	12.0	11.9	11.7	11.8	11.6	11.7	12.2
7.7	P	9.8	10.0						10.2	10.4									9.5	8.1	9.4	9.3	9.1	9.2	9.0	9.1	9.6
9.9	Q	12.3	12.5						12.7	12.9									12.1	10.6	12.0	11.9	11.7	11.8	11.6	11.7	12.2
8.0	R	10.3	10.5						10.7	10.9									10.1	8.6	10.0	9.9	9.6	9.8	9.5	9.6	10.2
7.6	S	9.8	10.0						10.2	10.4									9.5	8.1	9.4	9.3	9.1	9.2	9.0	9.1	9.6
7.6	T	9.4	9.6						9.9	10.1									9.2	7.7	9.1	9.0	8.8	8.9	8.7	8.8	9.3
8.3	U	11.1	11.3						11.6	11.8									10.9	9.4	10.8	10.7	10.5	10.6	10.4	10.5	11.0
9.0	V	10.7	10.9						11.1	11.3									10.5	9.0	10.4	10.3	10.1	10.2	10.0	10.1	10.6
14.1	W	15.9	16.1						16.3	16.5									15.7	14.2	15.6	15.5	15.3	15.4	15.2	15.3	15.8
9.1	X	10.7	10.9						11.1	11.3									10.5	9.0	10.4	10.3	10.1	10.2	10.0	10.1	10.6
9.3	Y	10.8	11.0						11.2	11.4									10.6	9.1	10.5	10.4	10.2	10.3	10.1	10.2	10.7
7.6	Z	9.8	10.0						10.2	10.4									9.5	8.1	9.4	9.3	9.1	9.2	9.0	9.1	9.6

8" UPPER CASE to lower case

8		a 5.9	c 5.4	d 5.8	e 5.9	g 5.8	o 6.2	q 6.4	i 1.8	b 5.8	h 5.5	k 5.7	l 2.6	m 9.0	n 5.5	p 5.8	r 3.7	u 5.4	f 3.8	j 3.5	s 5.1	t 3.9	v 6.1	w 9.3	x 6.2	y 6.2	z 4.9
7.5	A	8.8	9.0						9.1	9.3									8.6	7.5	8.6	8.5	8.3	8.4	8.2	8.3	8.7
6.1	B	7.8	8.0						8.2	8.3									7.7	6.6	7.6	7.5	7.4	7.4	7.3	7.4	7.8
6.6	C	8.0	8.2						8.3	8.5									7.8	6.7	7.8	7.7	7.5	7.6	7.4	7.5	7.9
6.5	D	8.3	8.5						8.6	8.8									8.2	7.0	8.1	8.0	7.8	7.9	7.8	7.8	8.2
5.1	E	6.8	7.0						7.1	7.3									6.6	5.5	6.6	6.5	6.3	6.4	6.2	6.3	6.7
4.9	F	6.5	6.6						6.8	7.0									6.3	5.2	6.2	6.2	6.0	6.1	5.9	6.0	6.4
7.0	G	8.8	9.0						9.1	9.3									8.6	7.5	8.6	8.5	8.3	8.4	8.2	8.3	8.7
6.2	H	8.6	8.7						8.9	9.0									8.4	7.3	8.3	8.2	8.1	8.2	8.0	8.1	8.5
1.6	I	3.8	3.9						4.1	4.2									3.6	2.5	3.5	3.4	3.3	3.4	3.2	3.3	3.7
4.5	J	6.6	6.8						7.0	7.1									6.5	5.4	6.4	6.3	6.2	6.2	6.1	6.2	6.6
6.2	K	7.5	7.7						7.8	8.0									7.4	6.2	7.3	7.2	7.0	7.1	7.0	7.0	7.4
4.7	L	6.2	6.4						6.6	6.7									6.1	5.0	6.0	5.9	5.8	5.8	5.7	5.8	6.2
7.4	M	9.5	9.7						9.8	10.0									9.4	8.2	9.3	9.2	9.0	9.1	9.0	9.0	9.4
6.6	N	8.8	9.0						9.1	9.3									8.6	7.5	8.6	8.5	8.3	8.4	8.2	8.3	8.7
7.4	O	9.3	9.4						9.6	9.8									9.1	8.0	9.0	9.0	8.8	8.9	8.7	8.8	9.2
5.8	P	7.4	7.5						7.7	7.8									7.2	6.1	7.1	7.0	6.9	7.0	6.8	6.9	7.3
7.4	Q	9.3	9.4						9.6	9.8									9.1	8.0	9.0	9.0	8.8	8.9	8.7	8.8	9.2
6.0	R	7.8	7.9						8.1	8.2									7.6	6.5	7.5	7.4	7.3	7.4	7.2	7.3	7.7
5.8	S	7.4	7.5						7.7	7.8									7.2	6.1	7.1	7.0	6.9	7.0	6.8	6.9	7.3
5.8	T	7.1	7.3						7.4	7.6									7.0	5.8	6.9	6.8	6.6	6.7	6.6	6.6	7.0
6.2	U	8.4	8.6						8.7	8.9									8.2	7.1	8.2	8.1	7.9	8.0	7.8	7.9	8.3
6.8	V	8.1	8.2						8.4	8.6									7.9	6.8	7.8	7.8	7.6	7.7	7.5	7.6	8.0
10.6	W	12.0	12.2						12.3	12.5									11.8	10.7	11.8	11.7	11.5	11.6	11.4	11.5	11.9
6.9	X	8.1	8.2						8.4	8.6									7.9	6.8	7.8	7.8	7.6	7.7	7.5	7.6	8.0
7.0	Y	8.2	8.3						8.5	8.6									8.0	6.9	7.9	7.8	7.7	7.8	7.6	7.7	8.1
5.8	Z	7.4	7.5						7.7	7.8									7.2	6.1	7.1	7.0	6.9	7.0	6.8	6.9	7.3

NOTE:

ALL DIMENSIONS ARE IN INCHES.

ENGLISH UNITS

COMMONWEALTH OF PENNSYLVANIA
DEPARTMENT OF TRANSPORTATION
BUREAU OF HIGHWAY SAFETY AND TRAFFIC ENGINEERING

SPACING CHARTS
DIRECT APPLIED LETTERS & NUMERALS

UPPER CASE & LOWER CASE
CLEARVIEW HIGHWAY 5WR

RECOMMENDED MAY 25, 2007
Glen C Rowe
CHIEF, TRAFFIC ENGINEERING AND OPERATIONS DIVISION

RECOMMENDED MAY 25, 2007
M. C. Patel
CHIEF HIGHWAY ENGINEER

SHT. 10 OF 18

TC-8700C

20" lower case to lower case

20		14.8	13.6	14.8	14.6	15.4	16.0	14.6	4.6	14.4	13.8	14.2	6.4	22.6	13.8	14.6	9.2	13.6	9.6	8.8	12.8	9.8	15.2	23.2	15.4	15.6	12.2
		a	c	e	g	o	q	d	i	b	h	k	l	m	n	p	r	u	f	j	s	t	v	w	x	y	z
14.8	a	18.8	19.2	19.2	19.6	20.0													18.4	15.6	18.2	18.0	17.6	17.8	17.4	17.6	18.6
14.4	b	18.8	19.2	19.2	19.6	20.0													18.4	15.6	18.2	18.0	17.6	17.8	17.4	17.6	18.6
13.6	c	17.0	17.4	17.4	17.8	18.2													16.6	13.8	16.4	16.2	15.8	16.0	15.6	15.8	16.8
14.6	d	19.8	20.2	20.2	20.6	21.0													19.4	16.6	19.2	19.0	18.6	18.8	18.4	18.6	19.6
14.8	e	19.2	19.6	19.6	20.0	20.4													18.8	16.0	18.6	18.4	18.0	18.2	17.8	18.0	19.0
9.6	f	13.0	13.4	13.4	13.8	14.2													12.6	9.8	12.4	12.2	11.8	12.0	11.6	11.8	12.8
14.6	g	19.8	20.2	20.2	20.6	21.0													19.4	16.6	19.2	19.0	18.6	18.8	18.4	18.6	19.6
13.8	h	19.0	19.4	19.4	19.8	20.2													18.6	15.8	18.4	18.2	17.8	18.0	17.6	17.8	18.8
4.6	i	9.4	9.8	9.8	10.2	10.6													9.0	6.2	8.8	8.6	8.2	8.4	8.0	8.2	9.2
8.8	j	13.6	14.0	14.0	14.4	14.8													13.2	10.4	13.0	12.8	12.4	12.6	12.2	12.4	13.4
14.2	k	17.0	17.4	17.4	17.8	18.2													16.6	13.8	16.4	16.2	15.8	16.0	15.6	15.8	16.8
6.4	l	10.0	10.4	10.4	10.8	11.2													9.6	6.8	9.4	9.2	8.8	9.0	8.6	8.8	9.8
22.6	m	27.8	28.2	28.2	28.6	29.0													27.4	24.6	27.2	27.0	26.6	26.8	26.4	26.6	27.6
13.8	n	19.0	19.4	19.4	19.8	20.2													18.6	15.8	18.4	18.2	17.8	18.0	17.6	17.8	18.8
15.4	o	19.8	20.2	20.2	20.6	21.0													19.4	16.6	19.2	19.0	18.6	18.8	18.4	18.6	19.6
14.6	p	19.0	19.4	19.4	19.8	20.2													18.6	15.8	18.4	18.2	17.8	18.0	17.6	17.8	18.8
16.0	q	19.8	20.2	20.2	20.6	21.0													19.4	16.6	19.2	19.0	18.6	18.8	18.4	18.6	19.6
9.2	r	12.6	13.0	13.0	13.4	13.8													12.2	9.4	12.0	11.8	11.4	11.6	11.2	11.4	12.4
12.8	s	16.8	17.2	17.2	17.6	18.0													16.4	13.6	16.2	16.0	15.6	15.8	15.4	15.6	16.6
9.8	t	13.6	14.0	14.0	14.4	14.8													13.2	10.4	13.0	12.8	12.4	12.6	12.2	12.4	13.4
13.6	u	18.8	19.2	19.2	19.6	20.0													18.4	15.6	18.2	18.0	17.6	17.8	17.4	17.6	18.6
15.2	v	18.0	18.4	18.4	18.8	19.2													17.6	14.8	17.4	17.2	16.8	17.0	16.6	16.8	17.8
23.2	w	26.2	26.6	26.6	27.0	27.4													25.8	23.0	25.6	25.4	25.0	25.2	24.8	25.0	26.0
15.4	x	18.0	18.4	18.4	18.8	19.2													17.6	14.8	17.4	17.2	16.8	17.0	16.6	16.8	17.8
15.6	y	18.4	18.8	18.8	19.2	19.6													18.0	15.2	17.8	17.6	17.2	17.4	17.0	17.2	18.2
12.2	z	16.0	16.4	16.4	16.8	17.2													15.6	12.8	15.4	15.2	14.8	15.0	14.6	14.8	15.8

16" lower case to lower case

16		11.8	10.9	11.8	11.7	12.3	12.8	11.7	3.7	11.5	11.0	11.4	5.1	18.1	11.0	11.7	7.4	10.9	7.7	7.0	10.2	7.8	12.2	18.6	12.3	12.5	9.8
		a	c	e	g	o	q	d	i	b	h	k	l	m	n	p	r	u	f	j	s	t	v	w	x	y	z
11.8	a	15.0	15.4	15.4	15.7	16.0													14.7	12.5	14.6	14.4	14.1	14.2	13.9	14.1	14.9
11.5	b	15.0	15.4	15.4	15.7	16.0													14.7	12.5	14.6	14.4	14.1	14.2	13.9	14.1	14.9
10.9	c	13.6	13.9	13.9	14.2	14.6													13.3	11.0	13.1	13.0	12.6	12.8	12.5	12.6	13.4
11.7	d	15.8	16.2	16.2	16.5	16.8													15.5	13.3	15.4	15.2	14.9	15.0	14.7	14.9	15.7
11.8	e	15.4	15.7	15.7	16.0	16.3													15.0	12.8	14.9	14.7	14.4	14.6	14.2	14.4	15.2
7.7	f	10.4	10.7	10.7	11.0	11.4													10.1	7.8	9.9	9.8	9.4	9.6	9.3	9.4	10.2
11.7	g	15.8	16.2	16.2	16.5	16.8													15.5	13.3	15.4	15.2	14.9	15.0	14.7	14.9	15.7
11.0	h	15.2	15.5	15.5	15.8	16.2													14.9	12.6	14.7	14.6	14.2	14.4	14.1	14.2	15.0
3.7	i	7.5	7.8	7.8	8.2	8.5													7.2	5.0	7.0	6.9	6.6	6.7	6.4	6.6	7.4
7.0	j	10.9	11.2	11.2	11.5	11.8													10.6	8.3	10.4	10.2	9.9	10.1	9.8	9.9	10.7
11.4	k	13.6	13.9	13.9	14.2	14.6													13.3	11.0	13.1	13.0	12.6	12.8	12.5	12.6	13.4
5.1	l	8.0	8.3	8.3	8.6	9.0													7.7	5.4	7.5	7.4	7.0	7.2	6.9	7.0	7.8
18.1	m	22.2	22.6	22.6	22.9	23.2													21.9	19.7	21.8	21.6	21.3	21.4	21.1	21.3	22.1
11.0	n	15.2	15.5	15.5	15.8	16.2													14.9	12.6	14.7	14.6	14.2	14.4	14.1	14.2	15.0
12.3	o	15.8	16.2	16.2	16.5	16.8													15.5	13.3	15.4	15.2	14.9	15.0	14.7	14.9	15.7
11.7	p	15.2	15.5	15.5	15.8	16.2													14.9	12.6	14.7	14.6	14.2	14.4	14.1	14.2	15.0
12.8	q	15.8	16.2	16.2	16.5	16.8													15.5	13.3	15.4	15.2	14.9	15.0	14.7	14.9	15.7
7.4	r	10.1	10.4	10.4	10.7	11.0													9.8	7.5	9.6	9.4	9.1	9.3	9.0	9.1	9.9
10.2	s	13.4	13.8	13.8	14.1	14.4													13.1	10.9	13.0	12.8	12.5	12.6	12.3	12.5	13.3
7.8	t	10.9	11.2	11.2	11.5	11.8													10.6	8.3	10.4	10.2	9.9	10.1	9.8	9.9	10.7
10.9	u	15.0	15.4	15.4	15.7	16.0													14.7	12.5	14.6	14.4	14.1	14.2	13.9	14.1	14.9
12.2	v	14.4	14.7	14.7	15.0	15.4													14.1	11.8	13.9	13.8	13.4	13.6	13.3	13.4	14.2
18.6	w	21.0	21.3	21.3	21.6	21.9													20.6	18.4	20.5	20.3	20.0	20.2	19.8	20.0	20.8
12.3	x	14.4	14.7	14.7	15.0	15.4													14.1	11.8	13.9	13.8	13.4	13.6	13.3	13.4	14.2
12.5	y	14.7	15.0	15.0	15.4	15.7													14.4	12.2	14.2	14.1	13.8	13.9	13.6	13.8	14.6
9.8	z	12.8	13.1	13.1	13.4	13.8													12.5	10.2	12.3	12.2	11.8	12.0	11.7	11.8	12.6

13.3" lower case to lower case

13.3		9.8	9.0	9.8	9.7	10.2	10.6	9.7	3.1	9.6	9.2	9.4	4.3	15.0	9.2	9.7	6.1	9.0	6.4	5.9	8.5	6.5	10.1	15.4	10.2	10.4	8.1
		a	c	e	g	o	q	d	i	b	h	k	l	m	n	p	r	u	f	j	s	t	v	w	x	y	z
9.8	a	12.5	12.8	12.8	13.0	13.3													12.2	10.4	12.1	12.0	11.7	11.8	11.6	11.7	12.4
9.6	b	12.5	12.8	12.8	13.0	13.3													12.2	10.4	12.1	12.0	11.7	11.8	11.6	11.7	12.4
9.0	c	11.3	11.6	11.6	11.8	12.1													11.0	9.2	10.9	10.8	10.5	10.6	10.4	10.5	11.2
9.7	d	13.2	13.4	13.4	13.7	14.0													12.9	11.0	12.8	12.6	12.4	12.5	12.2	12.4	13.0
9.8	e	12.8	13.0	13.0	13.3	13.6													12.5	10.6	12.4	12.2	12.0	12.1	11.8	12.0	12.6
6.4	f	8.6	8.9	8.9	9.2	9.4													8.4	6.5	8.2	8.1	7.8	8.0	7.7	7.8	8.5
9.7	g	13.2	13.4	13.4	13.7	14.0													12.9	11.0	12.8	12.6	12.4	12.5	12.2	12.4	13.0
9.2	h	12.6	12.9	12.9	13.2	13.4													12.4	10.5	12.2	12.1	11.8	12.0	11.7	11.8	12.5
3.1	i	6.3	6.5	6.5	6.8	7.0													6.0	4.1	5.9	5.7	5.5	5.6	5.3	5.5	6.1
5.9	j	9.0	9.3	9.3	9.6	9.8													8.8	6.9	8.6	8.5	8.2	8.4	8.1	8.2	8.9
9.4	k	11.3	11.6	11.6	11.8	12.1													11.0	9.2	10.9	10.8	10.5	10.6	10.4	10.5	11.2
4.3	l	6.7	6.9	6.9	7.2	7.4													6.4	4.5	6.3	6.1	5.9	6.0	5.7	5.9	6.5
15.0	m	18.5	18.8	18.8	19.0	19.3													18.2	16.4	18.1	18.0	17.7	17.8	17.6	17.7	18.4
9.2	n	12.6	12.9	12.9	13.2	13.4													12.4	10.5	12.2	12.1	11.8	12.0	11.7	11.8	12.5
10.2	o	13.2	13.4	13.4	13.7	14.0													12.9	11.0	12.8	12.6	12.4	12.5	12.2	12.4	13.0
9.7	p	12.6	12.9	12.9	13.2	13.4													12.4	10.5	12.2	12.1	11.8	12.0	11.7	11.8	12.5
10.6	q	13.2	13.4	13.4	13.7	14.0													12.9	11.0	12.8	12.6	12.4	12.5	12.2	12.4	13.0
6.1	r	8.4	8.6	8.6	8.9	9.2													8.1	6.3	8.0	7.8	7.6	7.7	7.4	7.6	8.2
8.5	s	11.2	11.4	11.4	11.7	12.0													10.9	9.0	10.8	10.6	10.4	10.5	10.2	10.4	11.0
6.5	t	9.0	9.3	9.3	9.6	9.8													8.8	6.9	8.6	8.5	8.2	8.4	8.1	8.2	8.9
9.0	u	12.5	12.8	12.8	13.0	13.3													12.2	10.4	12.1	12.0	11.7	11.8	11.6	11.7	12.4
10.1	v	12.0	12.2	12.2	12.5	12.8													11.7	9.8	11.6	11.4	11.2	11.3	11.0	11.2	11.8
15.4	w	17.4	17.7	17.7	18.0	18.2													17.2	15.3	17.0	16.9	16.6	16.8	16.5	16.6	17.3
10.2	x	12.0	12.2	12.2	12.5	12.8													11.7	9.8	11.6	11.4	11.2	11.3	11.0	11.2	11.8
10.4	y	12.2	12.5	12.5	12.8	13.0													12.0	10.1	11.8	11.7	11.4	11.6	11.3	11.4	12.1
8.1	z	10.6	10.9	10.9	11.2	11.4													10.4	8.5	10.2	10.1	9.8	10.0	9.7	9.8	10.5

10.6" lower case to lower case

10.6		7.8	7.2	7.8	7.7	8.2	8.5	7.7	2.4	7.6	7.3	7.5	3.4	12.0	7.3	7.7	4.9	7.2	5.1	4.7	6.8	5.2	8.1	12.3	8.2	8.3	6.5
		a	c	e	g	o	q	d	i	b	h	k	l	m	n	p	r	u	f	j	s	t	v	w	x	y	z
7.8	a	10.0	10.2	10.2	10.3	10.6													9.8	8.3	9.6	9.5	9.3	9.4	9.2	9.3	9.9
7.6	b	10.0	10.2	10.2	10.3	10.6													9.8	8.3	9.6	9.5	9.3	9.4	9.2	9.3	9.9
7.2	c	9.0	9.2	9.2	9.3	9.6													8.8	7.3	8.7	8.6	8.4	8.5	8.3	8.4	8.9
7.7	d	10.5	10.7	10.7	10.8	11.1													10.3	8.8	10.2	10.1	9.9	10.0	9.8	9.9	10.4
7.8	e	10.2	10.4	10.4	10.5	10.8													10.0	8.5	9.9	9.8	9.5	9.6	9.4	9.5	10.1
5.1	f	6.9	7.1	7.1	7.2	7.5													6.7	5.2	6.6	6.5	6.3	6.4	6.1	6.3	6.8
7.7	g	10.5	10.7	10.7	10.8	11.1													10.3	8.8	10.2	10.1	9.9	10.0	9.8	9.9	10.4
7.3	h	10.1	10.3	10.3	10.4	10.7													9.9	8.4	9.8	9.6	9.4	9.5	9.3	9.4	10.0
2.4	i	5.0	5.2	5.2	5.3	5.6													4.8	3.3	4.7	4.6	4.3	4.5	4.2	4.3	4.9
4.7	j	7.2	7.4	7.4	7.5	7.8													7.0	5.5	6.9	6.8	6.6	6.7	6.5	6.6	7.1
7.5	k	9.0	9.2	9.2	9.3	9.6													8.8	7.3	8.7	8.6	8.4	8.5	8.3	8.4	8.9
3.4	l	5.3	5.5	5.5	5.7	5.9													5.1	3.6	5.0	4.9	4.7	4.8	4.6	4.7	5.2
12.0	m	14.7	14.9	14.9	15.0	15.4													14.5	13.0	14.4	14.3	14.1	14.2	14.0	14.1	14.6
7.3	n	10.1	10.3	10.3	10.4	10.7													9.9	8.4	9.8	9.6	9.4	9.5	9.3	9.4	10.0
8.2	o	10.5	10.7	10.7	10.8	11.1													10.3	8.8	10.2	10.1	9.9	10.0	9.8	9.9	10.4
7.7	p	10.1	10.3	10.3	10.4	10.7													9.9	8.4	9.8	9.6	9.4	9.5	9.3	9.4	10.0
8.5	q	10.5	10.7	10.7	10.8	11.1													10.3	8.8	10.2	10.1	9.9	10.0	9.8	9.9	10.4
4.9	r	6.7	6.9	6.9	7.0	7.3													6.5	5.0	6.4	6.3	6.0	6.1	5.9	6.0	6.6
6.8	s	8.9	9.1	9.1	9.2	9.5													8.7	7.2	8.6	8.5	8.3	8.4	8.2	8.3	8.8
5.2	t	7.2	7.4	7.4	7.5	7.8													7.0	5.5	6.9	6.8	6.6	6.7	6.5	6.6	7.1
7.2	u	10.0	10.2	10.2	10.3	10.6													9.8	8.3	9.6	9.5	9.3	9.4	9.2	9.3	9.9
8.1	v	9.5	9.8	9.8	9.9	10.2													9.3	7.8	9.2	9.1	8.9	9.0	8.8	8.9	9.4
12.3	w	13.9	14.1	14.1	14.1	14.5													13.7	12.2	13.6	13.5	13.3	13.4	13.1	13.3	13.8
8.2	x	9.5	9.8	9.8	9.9	10.2													9.3	7.8	9.2	9.1	8.9	9.0	8.8	8.9	9.4
8.3	y	9.8	10.0	10.0	10.1	10.4													9.5	8.1	9.4	9.3	9.1	9.2	9.0	9.1	9.6
6.5	z	8.5	8.7	8.7	8.8	9.1													8.3	6.8	8.2	8.1	7.8	8.0	7.7	7.8	8.4

8" lower case to lower case

8		5.9	5.4	5.9	5.8	6.2	6.4	5.8	1.8	5.8	5.5	5.7	2.6	9.0	5.5	5.8	3.7	5.4	3.8	3.5	5.1	3.9	6.1	9.3	6.2	6.2	4.9
		a	c	e	g	o	q	d	i	b	h	k	l	m	n	p	r	u	f	j	s	t	v	w	x	y	z
5.9	a	7.5	7.7	7.7	7.8	8.0													7.4	6.2	7.3	7.2	7.0	7.1	7.0	7.0	7.4
5.8	b	7.5	7.7	7.7	7.8	8.0													7.4	6.2	7.3	7.2	7.0	7.1	7.0	7.0	7.4
5.4	c	6.8	7.0	7.0	7.1	7.3													6.6	5.5	6.6	6.5	6.3	6.4	6.2	6.3	6.7
5.8	d	7.9	8.1	8.1	8.2	8.4													7.8	6.6	7.7	7.6	7.4	7.5	7.4	7.4	7.8
5.9	e	7.7	7.8	7.8	8.0	8.2													7.5	6.4	7.4	7.4	7.2	7.3	7.1	7.2	7.6
3.8	f	5.2	5.4	5.4	5.5	5.7													5.0	3.9	5.0	4.9	4.7	4.8	4.6	4.7	5.1
5.8	g	7.9	8.1	8.1	8.2	8.4													7.8	6.6	7.7	7.6	7.4	7.5	7.4	7.4	7.8
5.5	h	7.6	7.8	7.8	7.9	8.1													7.4	6.3	7.4	7.3	7.1	7.2	7.0	7.1	7.5
1.8	i	3.8	3.9	3.9	4.1	4.2													3.6	2.5	3.5	3.4	3.3	3.4	3.2	3.3	3.7
3.5	j	5.4	5.6	5.6	5.8	5.9													5.3	4.2	5.2	5.1	5.0	5.0	4.9	5.0	5.4
5.7	k	6.8	7.0	7.0	7.1	7.3													6.6	5.5	6.6	6.5	6.3	6.4	6.2	6.3	6.7
2.6	l	4.0	4.2	4.2	4.3	4.5													3.8	2.7	3.8	3.7	3.5	3.6	3.4	3.5	3.9
9.0	m	11.1	11.3	11.3	11.4	11.6													11.0	9.8	10.9	10.8	10.6	10.7	10.6	10.6	11.0
5.5	n	7.6	7.8	7.8	7.9	8.1													7.4	6.3	7.4	7.3	7.1	7.2	7.0	7.1	7.5
6.2	o	7.9	8.1	8.1	8.2	8.4													7.8	6.6	7.7	7.6	7.4	7.5	7.4	7.4	7.8
5.8	p	7.6	7.8	7.8	7.9	8.1													7.4	6.3	7.4	7.3	7.1	7.2	7.0	7.1	7.5
6.4	q	7.9	8.1	8.1	8.2	8.4													7.8	6.6	7.7	7.6	7.4	7.5	7.4	7.4	7.8
3.7	r	5.0	5.2	5.2	5.4	5.5													4.9	3.8	4.8	4.7	4.6	4.6	4.5	4.6	5.0
5.1	s	6.7	6.9	6.9	7.0	7.2													6.6	5.4	6.5	6.4	6.2	6.3	6.2	6.2	6.6
3.9	t	5.4	5.6	5.6	5.8	5.9													5.3	4.2	5.2	5.1	5.0	5.0	4.9	5.0	5.4
5.4	u	7.5	7.7	7.7	7.8	8.0													7.4	6.2	7.3	7.2	7.0	7.1	7.0	7.0	7.4
6.1	v	7.2	7.4	7.4	7.5	7.7													7.0	5.9	7.0	6.9	6.7	6.8	6.6	6.7	7.1
9.3	w	10.5	10.6	10.6	10.8	11.0													10.3	9.2	10.2	10.2	10.0	10.1	9.9	10.0	10.4
6.2	x	7.2	7.4	7.4	7.5	7.7													7.0	5.9	7.0	6.9	6.7	6.8	6.6	6.7	7.1
6.2	y	7.4	7.5	7.5	7.7	7.8													7.2	6.1	7.1	7.0	6.9	7.0	6.8	6.9	7.3
4.9	z	6.4	6.6	6.6	6.7	6.9													6.2	5.1	6.2	6.1	5.9	6.0	5.8	5.9	6.3

ENGLISH UNITS

NOTE:

ALL DIMENSIONS ARE IN INCHES.

COMMONWEALTH OF PENNSYLVANIA
DEPARTMENT OF TRANSPORTATION
BUREAU OF HIGHWAY SAFETY AND TRAFFIC ENGINEERING

SPACING CHARTS
DIRECT APPLIED LETTERS & NUMERALS

LOWER CASE
CLEARVIEW HIGHWAY 5WR

RECOMMENDED MAY 25, 2007
Glenn C Rowe
CHIEF, TRAFFIC ENGINEERING AND OPERATIONS DIVISION

RECOMMENDED MAY 25, 2007
M. C. Patel
CHIEF HIGHWAY ENGINEER

SHT. 11 OF 18

TC-8700C

24" UPPER CASE to 18" lower case

18 / 24		a	c	d	e	g	o	q	b	h	i	k	l	m	n	p	r	u	f	w	j	s	t	v	y	x	z
		15.2	15.3		15.8	15.3			4.5	15.2	4.5	25.4	15.3		11.7	15.3			9.8	23.7	8.4	15.2	12.0	17.9	19.4	18.6	15.8
24.0	A	29.6							30.4										29.3	27.5	28.5	27.8	28.5				
19.1	B	25.8							27.7										25.4	23.6	25.2	24.3	24.3				
19.1	C	25.4							26.9										24.8	23.2	24.7		25.1				
19.1	D	25.2							27.1										25.1	22.9	24.7		25.1				
17.7	E	24.1							25.6										23.5	21.8	23.3		23.7				
17.6	F	20.6							23.6										21.3	20.6	20.9		21.1				
19.2	G	25.6							27.1										25.0	23.3	24.8		25.2				
19.2	H	27.5							29.0										27.1	25.6	26.8		27.2				
4.8	I	13.1							14.6										12.7	11.2	12.4		12.8				
18.2	J	26.2							26.8										25.8	24.3	25.3		25.7				
19.7	K	24.5							26.8										24.2	22.4	23.9		24.3				
17.7	L	22.6							24.8										22.2	20.5	22.0		22.3				
22.2	M	30.5							32.0										30.1	28.6	29.8		30.2				
19.2	N	27.5							29.0										27.1	25.6	26.8		27.2				
20.0	O	26.1							28.0										26.0	23.8	25.6		26.0				
19.2	P	25.0							26.0										24.6	22.2	24.1		24.5				
20.0	Q	26.1							28.0										26.0	23.8	25.6		26.0				
19.2	R	25.3							27.2										25.2	23.1	24.8		25.2				
19.2	S	24.8							26.8										24.5	23.0	24.2		24.6				
17.7	T	22.2							24.8										21.8	21.1	22.2		22.6				
19.2	U	27.2							27.8										26.8	25.3	26.3		26.7				
21.9	V	26.0							28.7										26.4	25.4	26.9		27.3				
25.4	W	31.0							31.7										30.6	28.9	29.9	29.1	29.9				
20.7	X	26.3							27.1										26.0	24.2	25.2	24.5	25.2				
24.0	Y	27.0							30.0										27.8	26.6	26.9		27.4				
19.2	Z	26.7							28.2										26.5	24.5	26.3		26.7				

20" UPPER CASE to 15" lower case

15 / 20		a	c	d	e	g	o	q	b	h	i	k	l	m	n	p	r	u	f	w	j	s	t	v	y	x	z
		12.6	12.8		13.1	12.8			3.8	12.6	3.8	21.1	12.8		9.8	12.8			8.1	19.8	7.0	12.6	10.0	14.9	16.1	15.5	13.1
20.0	A	24.8							25.3										24.4	23.0	23.8	23.1	23.8				
15.9	B	21.5							23.0										21.1	19.6	21.0	20.3	20.3				
15.9	C	21.1							22.4										20.8	19.4	20.6		20.9				
15.9	D	21.0							22.6										20.9	19.1	20.6		20.9				
14.8	E	20.0							21.3										19.6	18.3	19.5		19.8				
14.6	F	17.1							19.6										17.8	17.1	17.4		17.6				
16.0	G	21.3							22.5										20.9	19.5	20.8		21.0				
16.0	H	22.9							24.1										22.5	21.3	22.4		22.8				
4.0	I	10.9							12.1										10.5	9.3	10.4		10.8				
15.1	J	21.9							22.3										21.5	20.3	21.1		21.4				
16.4	K	20.4							22.4										20.1	18.8	20.0		20.3				
14.8	L	18.8							20.8										18.5	17.1	18.4		18.6				
18.5	M	25.4							26.6										25.0	23.8	24.9		25.3				
16.0	N	22.9							24.1										22.5	21.3	22.4		22.8				
16.6	O	21.8							23.4										21.6	19.9	21.4		21.6				
16.0	P	20.9							21.6										20.5	18.5	20.0		20.4				
16.6	Q	21.8							23.4										21.6	19.9	21.4		21.6				
16.0	R	21.1							22.8										21.0	19.3	20.8		21.0				
16.0	S	20.8							22.4										20.4	19.1	20.3		20.5				
14.8	T	18.5							20.8										18.3	17.5	18.5		18.8				
16.0	U	22.8							23.1										22.4	21.1	22.0		22.3				
18.3	V	21.8							23.9										22.0	21.3	22.5		22.8				
21.1	W	25.9							26.4										25.5	24.1	24.9	24.3	24.9				
17.3	X	22.0							22.5										21.6	20.3	21.0	20.4	21.0				
20.0	Y	22.5							25.0										23.1	22.3	22.4		22.8				
16.0	Z	22.3							23.5										22.1	20.4	22.0		22.3				

16" UPPER CASE to 12" lower case

12 / 16		a	c	d	e	g	o	q	b	h	i	k	l	m	n	p	r	u	f	w	j	s	t	v	y	x	z
		10.1	10.3		10.5	10.3			3.0	10.1	3.0	16.9	10.3		7.8	10.3			6.5	15.8	5.6	10.1	8.0	11.9	12.9	12.4	10.5
16.0	A	19.8							20.3										19.5	18.4	19.0	18.5	19.0				
12.8	B	17.3							18.5										17.0	15.8	16.9	16.3	16.3				
12.8	C	17.0							18.0										16.6	15.5	16.5		16.8				
12.8	D	16.9							18.1										16.8	15.4	16.5		16.8				
11.9	E	16.1							17.1										15.8	14.6	15.6		15.9				
11.8	F	13.8							15.8										14.3	13.8	14.0		14.1				
12.8	G	17.0							18.0										16.6	15.5	16.5		16.8				
12.8	H	18.3							19.3										18.0	17.0	17.9		18.1				
3.3	I	8.8							9.8										8.5	7.5	8.4		8.6				
12.1	J	17.5							17.9										17.3	16.3	16.9		17.1				
13.0	K	16.3							17.8										16.0	14.9	15.9		16.1				
11.9	L	15.1							16.6										14.9	13.8	14.8		15.0				
14.8	M	20.3							21.3										20.0	19.0	19.9		20.1				
12.8	N	18.3							19.3										18.0	17.0	17.9		18.1				
13.4	O	17.5							18.8										17.4	16.0	17.1		17.4				
12.8	P	16.6							17.3										16.4	14.8	16.0		16.3				
13.4	Q	17.5							18.8										17.4	16.0	17.1		17.4				
12.8	R	16.9							18.1										16.8	15.4	16.5		16.8				
12.8	S	16.5							17.9										16.3	15.3	16.1		16.4				
11.9	T	14.9							16.6										14.6	14.1	14.9		15.1				
12.8	U	18.1							18.5										17.9	16.9	17.5		17.8				
14.6	V	17.4							19.1										17.6	17.0	18.0		18.3				
16.9	W	20.6							21.1										20.4	19.3	19.9	19.4	19.9				
13.9	X	17.6							18.1										17.4	16.3	16.9	16.4	16.9				
16.0	Y	18.0							20.0										18.5	17.8	17.9		18.3				
12.8	Z	17.8							18.8										17.6	16.3	17.5		17.8				

18" lower case to 18" lower case

18		a	c	d	e	g	o	q	b	h	i	k	l	m	n	p	r	u	f	w	j	s	t	v	y	x	z
		15.2	15.3		15.8	15.3			4.5	15.2	4.5	25.4	15.3		11.7	15.3			9.8	23.7	8.4	15.2	12.0	17.9	19.4	18.6	15.8
15.2	a	22.4							24.3										22.0	20.4	21.9		22.3				
15.3	b	20.6							22.6										20.2	18.4	19.9		20.3				
15.2	c	20.8							22.7										20.4	18.7	20.2		20.5				
15.3	d	22.6							24.4										22.2	20.6	22.1		22.4				
15.3	e	20.9							22.8										20.6	18.8	20.3		20.7				
9.8	f	15.0							17.0										14.6	12.9	14.4		14.8				
15.3	g	22.6							24.4										22.2	20.6	22.1		22.4				
15.3	h	22.6							24.4										22.2	20.6	22.1		22.4				
4.5	i	11.8							13.6										11.4	9.8	11.3		11.6				
8.4	j	15.7							17.5										15.3	13.7	15.2		15.5				
15.2	k	20.4							22.4										20.0	18.3	19.8		20.2				
4.5	l	11.8							13.6										11.4	9.8	11.3		11.6				
25.4	m	32.6							34.5										32.2	30.6	32.1		32.5				
15.3	n	22.6							24.4										22.2	20.6	22.1		22.4				
15.8	o	21.0							23.0										20.6	18.9	20.4		20.8				
15.3	p	20.6							22.6										20.2	18.4	19.9		20.3				
15.3	q	22.6							24.4										22.2	20.6	22.1		22.4				
11.7	r	15.2							17.3										15.1	13.2	14.7		15.1				
15.2	s	20.4							22.4										20.0	18.3	19.8		20.2				
12.0	t	17.4							19.5										17.0	15.4	16.9		17.3				
15.3	u	22.6							24.4										22.2	20.6	22.1		22.4				
17.9	v	22.5							24.6										22.1	20.5	22.0		22.4				
23.7	w	28.6							30.5										28.2	26.5	28.0		28.3				
18.6	x	23.6							25.5										23.2	21.6	23.1		23.5				
19.4	y	24.0							26.1										23.6	22.0	23.5		23.9				
15.8	z	21.1							23.3										20.8	19.1	20.6		21.0				

15" lower case to 15" lower case

15		a	c	d	e	g	o	q	b	h	i	k	l	m	n	p	r	u	f	w	j	s	t	v	y	x	z
		12.6	12.8		13.1	12.8			3.8	12.6	3.8	21.1	12.8		9.8	12.8			8.1	19.8	7.0	12.6	10.0	14.9	16.1	15.5	13.1
12.6	a	18.8							20.3										18.4	17.0	18.3		18.6				
12.8	b	17.1							18.9										16.8	15.4	16.6		17.0				
12.6	c	17.4							18.9										17.0	15.6	16.9		17.1				
12.8	d	18.9							20.4										18.5	17.1	18.4		18.8				
12.8	e	17.5							19.0										17.1	15.8	17.0		17.3				
8.1	f	12.5							14.3										12.1	10.8	12.0		12.4				
12.8	g	18.9							20.4										18.5	17.1	18.4		18.8				
12.8	h	18.9							20.4										18.5	17.1	18.4		18.8				
3.8	i	9.9							11.4										9.5	8.1	9.4		9.8				
7.0	j	13.1							14.6										12.8	11.4	12.6		13.0				
12.6	k	17.0							18.8										16.6	15.3	16.5		16.9				
3.8	l	9.9							11.4										9.5	8.1	9.4		9.8				
21.1	m	27.3							28.8										26.9	25.5	26.8		27.1				
12.8	n	18.9							20.4										18.5	17.1	18.4		18.8				
13.1	o	17.5							19.3										17.1	15.8	17.0		17.4				
12.8	p	17.1							18.9										16.8	15.4	16.6		17.0				
12.8	q	18.9							20.4										18.5	17.1	18.4		18.8				
9.8	r	12.8							14.5										12.5	11.0	12.3		12.5				
12.6	s	17.0							18.8										16.6	15.3	16.5		16.9				
10.0	t	14.5							16.3										14.3	12.8	14.0		14.4				
12.8	u	18.9							20.4										18.5	17.1	18.4		18.8				
14.9	v	18.8							20.5										18.5	17.1	18.4		18.6				
19.8	w	23.8							25.4										23.5	22.1	23.4		23.6				
15.5	x	19.8							21.3										19.4	18.0	19.3		19.5				
16.1	y	20.0							21.8										19.8	18.4	19.6		19.9				
13.1	z	17.6							19.4										17.4	15.9	17.1		17.5				

12" lower case to 12" lower case

12		a	c	d	e	g	o	q	b	h	i	k	l	m	n	p	r	u	f	w	j	s	t	v	y	x	z
		10.1	10.3		10.5	10.3			3.0	10.1	3.0	16.9	10.3		7.8	10.3			6.5	15.8	5.6	10.1	8.0	11.9	12.9	12.4	10.5
10.1	a	15.0							16.3										14.8	13.6	14.6		14.9				
10.3	b	13.8							15.1										13.5	12.4	13.4		13.6				
10.1	c	13.9							15.1										13.6	12.5	13.5		13.8				
10.3	d	15.1							16.4										14.9	13.8	14.8		15.0				
10.3	e	14.0							15.3										13.8	12.6	13.6		13.9				
6.5	f	10.0							11.4										9.8	8.6	9.6		9.9				
10.3	g	15.1							16.4										14.9	13.8	14.8		15.0				
10.3	h	15.1							16.4										14.9	13.8	14.8		15.0				
3.0	i	7.9							9.1										7.6	6.5	7.5		7.8				
5.6	j	10.5							11.8										10.3	9.1	10.1		10.4				
10.1	k	13.6							15.0										13.4	12.3	13.3		13.5				
3.0	l	7.9							9.1										7.6	6.5	7.5		7.8				
16.9	m	21.8							23.0										21.5	20.4	21.4		21.6				
10.3	n	15.1							16.4										14.9	13.8	14.8		15.0				
10.5	o	14.0							15.4										13.8	12.6	13.6		13.9				
10.3	p	13.8							15.1										13.5	12.4	13.4		13.6				
10.3	q	15.1							16.4										14.9	13.8	14.8		15.0				
7.8	r	10.1							11.5										10.0	8.8	9.8		10.0				
10.1	s	13.6							15.0										13.4	12.3	13.3		13.5				
8.0	t	11.6							13.0										11.4	10.3	11.3		11.5				
10.3	u	15.1							16.4										14.9	13.8	14.8		15.0				
11.9	v	15.0							16.4										14.8	13.6	14.6		14.9				
15.8	w	19.0							20.3										18.8	17.6	18.6		18.9				
12.4	x	15.8							17.0										15.5	14.4	15.4		15.6				
12.9	y	16.0							17.4										15.8	14.6	15.6		15.9				
10.5	z	14.1							15.5										13.9	12.8	13.8		14.0				

24" DIGIT to 24" DIGIT

24		0	2	3	6	8	9	1	5	4	7
		19.8	19.1					8.0	19.1	22.2	19.1
19.8	0	24.8						26.0		24.8	
8.0	1	14.1						14.1		12.9	
19.1	2	24.0						25.2		24.0	
19.1	3	24.0						25.2		24.0	
22.2	4	27.2						27.2		23.9	
19.1	5	24.0						25.2		24.0	
19.1	6	24.0						25.2		24.0	
19.1	7	24.0						24.0		20.7	
19.1	8	24.0						25.2		24.0	
19.1	9	24.0						25.2		24.0	

20" DIGIT to 20" DIGIT

20		0	2	3	6	8	9	1	5	4	7
		16.5	15.9					6.6	15.9	18.5	15.9
16.5	0	20.6						21.6		20.6	
6.6	1	11.8						11.8		10.8	
15.9	2	20.0						21.0		20.0	
15.9	3	20.0						21.0		20.0	
18.5	4	22.6						22.6		19.9	
15.9	5	20.0						21.0		20.0	
15.9	6	20.0						21.0		20.0	
15.9	7	20.0						20.0		17.3	
15.9	8	20.0						21.0		20.0	
15.9	9	20.0						21.0		20.0	

16" DIGIT to 16" DIGIT

16		0	2	3	6	8	9	1	5	4	7
		13.4	12.8					5.3	12.8	14.9	12.8
13.4	0	16.7						17.5		16.7	
5.3	1	9.4						9.4		8.6	
12.8	2	16.1						16.9		16.1	
12.8	3	16.1						16.9		16.1	
14.9	4	18.2						18.2		16.0	
12.8	5	16.1						16.9		16.1	
12.8	6	16.1						16.9		16.1	
12.8	7	16.1						16.1		13.9	
12.8	8	16.1						16.9		16.1	
12.8	9	16.1						16.9		16.1	

NOTE:

ALL DIMENSIONS ARE IN INCHES UNLESS OTHERWISE NOTED. SEE SHEETS 2 THROUGH 7 FOR CORRESPONDING METRIC UNITS.

ENGLISH UNITS

COMMONWEALTH OF PENNSYLVANIA
DEPARTMENT OF TRANSPORTATION
BUREAU OF HIGHWAY SAFETY AND TRAFFIC ENGINEERING

SPACING CHARTS
DIRECT APPLIED LETTERS & NUMERALS

UPPER CASE & LOWER CASE
SERIES E MODIFIED (ENGLISH)

RECOMMENDED MAY 25, 2007
Glenn C Rowe
CHIEF, TRAFFIC ENGINEERING AND OPERATIONS DIVISION

RECOMMENDED MAY 25, 2007
M. Patel
CHIEF HIGHWAY ENGINEER

SHT. 12 OF 18

TC-8700C

13.3" UPPER CASE to 10" lower case

13.3 \ 10		8.4	8.5	8.6	8.5	2.5	8.4	2.5	14.1	8.5	6.5	8.5	5.5	13.1	4.6	8.5	6.7	10.0	10.8	10.4	8.6
		a	c	d	e	g	o	q	b	h	i	k	l	m	n	p	r	u	f	w	j	s	t	v	y	x	z
13.4	A	16.5			16.9								16.3	15.4	15.9	15.5	15.9	16.6									
10.5	B	14.3			15.3								14.0	13.0	14.0	13.4	13.4	14.4									
10.6	C	14.1			15.0								13.9	12.9	13.8	14.0	14.3										
10.6	D	14.1			15.1								14.0	12.9	13.8	14.0	14.1										
9.9	E	13.4			14.3								13.1	12.1	13.0	13.3	13.5										
9.9	F	11.5			13.3								12.0	11.5	11.8	11.9	12.4										
10.6	G	14.1			15.0								13.9	12.9	13.8	14.0	14.3										
10.8	H	15.4			16.1								15.1	14.3	15.0	15.3	15.5										
2.6	I	7.3			8.0								7.0	6.1	6.9	7.1	7.4										
10.1	J	14.6			14.9								14.4	13.6	14.1	14.3	14.8										
10.9	K	13.6			14.9								13.4	12.5	13.3	13.5	13.8										
9.8	L	12.5			13.8								12.3	11.4	12.1	12.4	12.6										
12.3	M	16.9			17.6								16.6	15.8	16.5	16.8	17.0										
10.6	N	15.3			16.0								15.0	14.1	14.9	15.1	15.4										
11.1	O	14.6			15.6								14.5	13.4	14.3	14.5	14.6										
10.6	P	13.9			14.4								13.6	12.3	13.4	13.5	13.8										
11.1	Q	14.6			15.6								14.5	13.4	14.3	14.5	14.6										
10.6	R	14.1			15.1								14.0	12.9	13.8	14.0	14.1										
10.6	S	13.8			14.9								13.5	12.8	13.5	13.6	13.9										
9.9	T	12.4			13.9								12.1	11.8	12.4	12.6	12.8										
10.7	U	15.2			15.4								14.9	14.2	14.7	14.8	15.3										
12.1	V	14.4			15.9								14.6	14.1	15.0	15.1	15.4										
14.0	W	17.1			17.5								16.9	16.0	16.5	16.1	16.5	17.3									
11.6	X	14.8			15.1								14.5	13.6	14.1	13.8	14.1	14.9									
13.4	Y	15.0			16.8								15.5	14.9	15.0	15.3	16.1										
10.6	Z	14.8			15.6								14.6	13.5	14.6	14.8	15.0										

10.6" UPPER CASE to 8" lower case

10.6 \ 8		6.8	7.0	6.8	2.0	6.8	2.0	11.3	6.8	5.3	6.8	4.4	10.6	3.8	6.8	5.4	8.0	8.6	8.3	7.0
		a	c	d	e	g	o	q	b	h	i	k	l	m	n	p	r	u	f	w	j	s	t	v	y	x	z
10.8	A	13.2			13.6								13.1	12.3	12.8	12.5	12.8	13.3									
8.5	B	11.5			12.3								11.3	10.5	11.3	10.8	10.8	11.6									
8.5	C	11.3			12.0								11.1	10.4	11.0	11.2	11.4										
8.5	D	11.3			12.1								11.2	10.3	11.0	11.2	11.3										
7.9	E	10.7			11.4								10.4	9.7	10.4	10.6	10.8										
7.9	F	9.2			10.6								9.6	9.2	9.4	9.5	9.9										
8.5	G	11.3			12.0								11.1	10.4	11.0	11.2	11.4										
8.6	H	12.3			13.0								12.1	11.5	12.1	12.2	12.4										
2.3	I	5.9			6.6								5.8	5.1	5.7	5.8	6.0										
8.1	J	11.7			12.0								11.6	10.9	11.3	11.5	11.8										
8.8	K	10.9			11.9								10.8	10.0	10.7	10.8	11.1										
7.9	L	10.0			11.1								9.9	9.1	9.8	10.0	10.2										
10.0	M	13.7			14.3								13.5	12.8	13.4	13.6	13.7										
8.5	N	12.2			12.8								12.0	11.3	11.9	12.1	12.2										
8.9	O	11.6			12.5								11.6	10.7	11.4	11.6	11.7										
8.5	P	11.1			11.5								10.9	9.8	10.7	10.8	11.0										
8.9	Q	11.6			12.5								11.6	10.7	11.4	11.6	11.7										
8.5	R	11.3			12.1								11.2	10.3	11.0	11.2	11.3										
8.5	S	11.0			11.9								10.8	10.2	10.7	10.9	11.1										
7.9	T	9.9			11.1								9.7	9.4	9.9	10.0	10.2										
8.5	U	12.1			12.3								11.9	11.3	11.7	11.9	12.2										
9.8	V	11.6			12.7								11.8	11.3	12.0	12.2	12.3										
11.3	W	13.7			14.1								13.6	12.8	13.3	13.0	13.3	13.8									
9.3	X	11.7			12.1								11.6	10.8	11.3	11.0	11.3	11.8									
10.8	Y	12.1			13.4								12.4	11.9	12.0		12.3	12.9									
8.5	Z	11.9			12.5								11.8	10.8	11.7		11.9	12.0									

8" UPPER CASE to 6" lower case

8 \ 6		5.1	5.3	5.1	1.5	5.1	1.5	8.4	5.1	3.9	5.1	3.3	7.9	2.8	5.1	4.0	6.0	6.5	6.1	5.3
		a	c	d	e	g	o	q	b	h	i	k	l	m	n	p	r	u	f	w	j	s	t	v	y	x	z
8.0	A	9.9			10.1								9.8	9.2	9.5	9.3	9.5	9.9									
6.4	B	8.6			9.3								8.5	7.9	8.4	8.1	8.1	8.7									
6.4	C	8.5			9.0								8.3	7.8	8.3		8.4	8.6									
6.4	D	8.4			9.1								8.4	7.7	8.3		8.4	8.5									
5.9	E	8.0			8.5								7.8	7.3	7.8		7.9	8.1									
5.9	F	6.9			7.9								7.1	6.9	7.0		7.1	7.4									
6.4	G	8.5			9.0								8.3	7.8	8.3		8.4	8.6									
6.4	H	9.1			9.6								9.0	8.5	8.9		9.1	9.2									
1.6	I	4.4			4.9								4.2	3.7	4.2		4.3	4.4									
6.0	J	8.7			8.9								8.6	8.1	8.4		8.5	8.8									
6.5	K	8.1			8.9								8.0	7.4	7.9		8.1	8.3									
5.9	L	7.5			8.3								7.4	6.8	7.3		7.4	7.6									
7.4	M	10.1			10.6								10.0	9.5	9.9		10.1	10.2									
6.4	N	9.1			9.6								9.0	8.5	8.9		9.1	9.2									
6.6	O	8.7			9.3								8.6	7.9	8.5		8.6	8.8									
6.4	P	8.3			8.6								8.2	7.4	8.0		8.1	8.3									
6.6	Q	8.7			9.3								8.6	7.9	8.5		8.6	8.8									
6.4	R	8.4			9.1								8.4	7.7	8.3		8.4	8.5									
6.4	S	8.3			8.9								8.1	7.6	8.1		8.2	8.3									
5.9	T	7.4			8.3								7.3	7.0	7.4		7.5	7.6									
6.4	U	9.1			9.3								8.9	8.4	8.8		8.9	9.1									
7.3	V	8.6			9.5								8.8	8.4	8.9		9.1	9.2									
8.4	W	10.3			10.5								10.1	9.6	9.9	9.6	9.9	10.3									
6.9	X	8.8			9.0								8.6	8.1	8.4	8.1	8.4	8.8									
8.0	Y	9.0			10.0								9.3	8.9	8.9		9.1	9.6									
6.4	Z	8.9			9.4								8.8	8.1	8.8		8.9	9.0									

10" lower case to 10" lower case

10		8.4	8.5	8.6	8.5	2.5	8.4	2.5	14.1	8.5	6.5	8.5	5.5	13.1	4.6	8.5	6.7	10.0	10.8	10.4	8.6
		a	c	d	e	g	o	q	b	h	i	k	l	m	n	p	r	u	f	w	j	s	t	v	y	x	z
8.4	a	12.4			13.5								12.3	11.3	12.1	12.4	12.5										
8.5	b	11.4			12.5								11.3	10.3	11.1	11.4	11.5										
8.4	c	11.5			12.5								11.3	10.4	11.3	11.4	11.6										
8.5	d	12.5			13.6								12.4	11.4	12.3	12.5	12.6										
8.5	e	11.6			12.6								11.4	10.5	11.4	11.5	11.8										
5.5	f	8.4			9.5								8.3	7.3	8.1	8.4	8.5										
8.5	g	12.5			13.6								12.4	11.4	12.3	12.5	12.6										
8.5	h	12.5			13.6								12.4	11.4	12.3	12.5	12.6										
2.5	i	6.5			7.6								6.4	5.4	6.3	6.5	6.6										
4.6	j	8.6			9.8								8.5	7.5	8.4	8.6	8.8										
8.4	k	11.3			12.4								11.1	10.1	11.0	11.3	11.4										
2.5	l	6.5			7.6								6.4	5.4	6.3	6.5	6.6										
14.1	m	18.1			19.3								18.0	17.0	17.9	18.1	18.3										
8.5	n	12.5			13.6								12.4	11.4	12.3	12.5	12.6										
8.6	o	11.5			12.6								11.4	10.4	11.3	11.5	11.6										
8.5	p	11.4			12.5								11.3	10.3	11.1	11.4	11.5										
8.5	q	12.5			13.6								12.4	11.4	12.3	12.5	12.6										
6.5	r	8.5			9.6								8.4	7.4	8.1	8.4	8.6										
8.5	s	11.4			12.5								11.3	10.3	11.1	11.4	11.5										
6.7	t	9.7			10.8								9.6	8.6	9.4	9.6	9.8										
8.5	u	12.5			13.6								12.4	11.4	12.3	12.5	12.6										
10.0	v	12.6			13.8								12.4	11.5	12.3	12.5	12.8										
13.1	w	15.9			16.9								15.6	14.8	15.5	15.8	16.0										
10.4	x	13.3			14.3								13.0	12.0	12.9	13.1	13.3										
10.8	y	13.4			14.5								13.1	12.3	13.0	13.3	13.5										
8.6	z	11.6			12.8								11.5	10.5	11.4	11.5	11.8										

8" lower case to 8" lower case

8		6.8	7.0	6.8	2.0	6.8	2.0	11.3	6.8	5.3	6.8	4.4	10.6	3.8	6.8	5.4	8.0	8.6	8.3	7.0
		a	c	d	e	g	o	q	b	h	i	k	l	m	n	p	r	u	f	w	j	s	t	v	y	x	z
6.8	a	10.0			10.8								9.9	9.1	9.7	9.9	10.1										
6.8	b	9.1			10.0								8.9	8.2	8.8	9.0	9.2										
6.8	c	9.2			10.1								9.1	8.3	9.0	9.2	9.3										
6.8	d	10.0			10.8								9.9	9.1	9.7	9.9	10.1										
6.8	e	9.2			10.1								9.1	8.3	9.0	9.2	9.3										
4.4	f	6.7			7.7								6.5	5.8	6.5	6.6	6.8										
6.8	g	10.0			10.8								9.9	9.1	9.7	9.9	10.1										
6.8	h	10.0			10.8								9.9	9.1	9.7	9.9	10.1										
2.0	i	5.3			6.1								5.1	4.3	5.0	5.2	5.4										
3.8	j	7.0			7.8								6.9	6.1	6.7	6.9	7.1										
6.8	k	9.1			10.0								8.9	8.2	8.8	9.0	9.2										
2.0	l	5.3			6.1								5.1	4.3	5.0	5.2	5.4										
11.3	m	14.5			15.3								14.4	13.6	14.2	14.4	14.6										
6.8	n	10.0			10.8								9.9	9.1	9.7	9.9	10.1										
7.0	o	9.3			10.3								9.2	8.4	9.1	9.2	9.4										
6.8	p	9.1			10.0								8.9	8.2	8.8	9.0	9.2										
6.8	q	10.0			10.8								9.9	9.1	9.7	9.9	10.1										
5.3	r	6.8			7.7								6.8	5.9	6.6	6.8	6.9										
6.8	s	9.1			10.0								8.9	8.2	8.8	9.0	9.2										
5.4	t	7.8			8.7								7.6	6.9	7.5	7.7	7.9										
6.8	u	10.0			10.8								9.9	9.1	9.7	9.9	10.1										
8.0	v	10.1			11.0								9.9	9.1	9.9	10.0	10.2										
10.6	w	12.8			13.6								12.6	11.9	12.6	12.7	12.9										
8.3	x	10.5			11.4								10.3	9.6	10.3	10.4	10.6										
8.6	y	10.7			11.6								10.6	9.8	10.5	10.6	10.8										
7.0	z	9.4			10.4								9.2	8.5	9.2	9.3	9.5										

6" lower case to 6" lower case

6		5.1	5.3	5.1	1.5	5.1	1.5	8.4	5.1	3.9	5.1	3.3	7.9	2.8	5.1	4.0	6.0	6.5	6.1	5.3
		a	c	d	e	g	o	q	b	h	i	k	l	m	n	p	r	u	f	w	j	s	t	v	y	x	z
5.1	a	7.6			8.2								7.4	6.9	7.4		7.5	7.6									
5.1	b	6.9			7.6								6.8	6.2	6.7		6.8	6.9									
5.1	c	7.0			7.6								6.9	6.3	6.8		6.9	7.1									
5.1	d	7.6			8.2								7.4	6.9	7.4		7.5	7.6									
5.1	e	7.0			7.6								6.9	6.3	6.8		6.9	7.1									
3.3	f	5.0			5.7								4.9	4.3	4.8		4.9	5.1									
5.1	g	7.6			8.2								7.4	6.9	7.4		7.5	7.6									
5.1	h	7.6			8.2								7.4	6.9	7.4		7.5	7.6									
1.5	i	3.9			4.6								3.8	3.3	3.8		3.9	4.0									
2.8	j	5.2			5.8								5.1	4.5	5.0		5.1	5.3									
5.1	k	6.9			7.6								6.8	6.2	6.7		6.8	6.9									
1.5	l	3.9			4.6								3.8	3.3	3.8		3.9	4.0									
8.4	m	10.8			11.4								10.7	10.1	10.6		10.8	10.9									
5.1	n	7.6			8.2								7.4	6.9	7.4		7.5	7.6									
5.3	o	7.0			7.7								6.9	6.3	6.8		6.9	7.1									
5.1	p	6.9			7.6								6.8	6.2	6.7		6.8	6.9									
5.1	q	7.6			8.2								7.4	6.9	7.4		7.5	7.6									
3.9	r	5.1			5.8								5.0	4.4	4.9		5.0	5.1									
5.1	s	6.9			7.6								6.8	6.2	6.7		6.8	6.9									
4.0	t	5.8			6.5								5.7	5.1	5.6		5.8	5.9									
5.1	u	7.6			8.2								7.4	6.9	7.4		7.5	7.6									
6.0	v	7.6			8.3								7.4	6.9	7.4		7.5	7.6									
7.9	w	9.5			10.1								9.4	8.8	9.3		9.4	9.6									
6.1	x	7.8			8.4								7.7	7.1	7.6		7.8	7.9									
6.5	y	8.1			8.8								7.9	7.4	7.9		8.0	8.1									
5.3	z	7.1			7.8								6.9	6.4	6.9		7.0	7.1									

13.3" DIGIT to 13.3" DIGIT

13.3		11.1	10.6					4.4	10.6	12.4	10.6
		0	2	3	6	8	9	1	5	4	7
11.1	0	13.9						14.5		13.9	
4.4	1	7.8						7.8		7.1	
10.6	2	13.4						14.0		13.4	
10.6	3	13.4						14.0		13.4	
12.4	4	15.1						15.1		13.3	
10.6	5	13.4						14.0		13.4	
10.6	6	13.4						14.0		13.4	
10.6	7	13.4						13.4		11.5	
10.6	8	13.4						14.0		13.4	
10.6	9	13.4						14.0		13.4	

10.6" DIGIT to 10.6" DIGIT

10.6		8.9	8.5					3.5	8.5	9.9	8.5
		0	2	3	6	8	9	1	5	4	7
8.9	0	11.1						11.6		11.1	
3.5	1	6.2						6.2		5.7	
8.5	2	10.7						11.2		10.7	
8.5	3	10.7						11.2		10.7	
9.9	4	12.1						12.1		10.6	
8.5	5	10.7						11.2		10.7	
8.5	6	10.7						11.2		10.7	
8.5	7	10.7						10.7		9.2	
8.5	8	10.7						11.2		10.7	
8.5	9	10.7						11.2		10.7	

8" DIGIT to 8" DIGIT

8		6.6	6.4					2.6	6.4	7.4	6.4
		0	2	3	6	8	9	1	5	4	7
6.6	0	8.3						8.7		8.3	
2.6	1	4.7						4.7		4.3	
6.4	2	8.0						8.4		8.0	
6.4	3	8.0						8.4		8.0	
7.4	4	9.0						9.0		7.9	
6.4	5	8.0						8.4		8.0	
6.4	6	8.0						8.4		8.0	
6.4	7	8.0						8.0		6.9	
6.4	8	8.0						8.4		8.0	
6.4	9	8.0						8.4		8.0	

NOTE:

ALL DIMENSIONS ARE IN INCHES UNLESS OTHERWISE NOTED. SEE SHEETS 2 THROUGH 7 FOR CORRESPONDING METRIC UNITS.

ENGLISH UNITS

COMMONWEALTH OF PENNSYLVANIA
DEPARTMENT OF TRANSPORTATION
BUREAU OF HIGHWAY SAFETY AND TRAFFIC ENGINEERING

SPACING CHARTS
DIRECT APPLIED LETTERS & NUMERALS

UPPER CASE & LOWER CASE
SERIES E MODIFIED (ENGLISH)

RECOMMENDED MAY 25, 2007
Glenn C Rowe
CHIEF, TRAFFIC ENGINEERING AND OPERATIONS DIVISION

RECOMMENDED MAY 25, 2007
M. C. Patel
CHIEF HIGHWAY ENGINEER

SHT. 13 OF 18

TC-8700C

18" UPPER CASE to 18" UPPER CASE

18		18.0	13.5	13.2	16.3	18.8	18.0	14.3	13.2	14.3	3.1	14.6	13.2	16.6	14.3	14.9	14.3	15.5	14.3
		A	J	T	V	W	Y	B	D	E	F	H	I	K	L	M	N	P	R	U	C	G	O	Q	S	X	Z
18.0	A	19.2						21.7																21.7			
14.3	B	18.1						19.0																18.1			
14.3	C	16.8						18.1																18.1			
14.3	D	18.1						19.0																18.1			
13.2	E	15.7						16.9																16.9			
13.2	F	15.7						16.9																16.9			
14.3	G	18.1						19.0																18.1			
14.3	H	18.1						19.0																19.0			
3.1	I	6.8						7.7																7.7			
13.5	J	17.2						18.1																18.1			
14.6	K	17.1						18.3																18.3			
13.2	L	14.5						16.9																16.9			
16.6	M	20.3						21.2																21.2			
14.3	N	18.1						19.0																19.0			
14.9	O	18.6						19.6																18.6			
14.3	P	18.1						19.0																18.1			
14.9	Q	18.6						19.6																18.6			
14.3	R	18.1						19.0																18.1			
14.3	S	18.1						19.0																18.1			
13.2	T	14.5						16.9																16.9			
14.3	U	18.1						19.0																19.0			
16.3	V	17.6						20.0																20.0			
18.8	W	20.1						22.6																22.6			
15.5	X	17.9						19.2																19.2			
18.0	Y	19.2						21.7																21.7			
14.3	Z	16.8						18.1																18.1			

18" DIGIT to 18" DIGIT

18		14.9	14.3					5.3	14.3	16.6	14.3
		0	2	3	6	8	9	1	5	4	7
14.9	0	18.6						19.6		18.6	
5.3	1	10.0						10.0		9.1	
14.3	2	18.1						19.0		18.1	
14.3	3	18.1						19.0		18.1	
16.6	4	20.3						20.3		17.8	
14.3	5	18.1						19.0		18.1	
14.3	6	18.1						19.0		18.1	
14.3	7	18.1						18.1		15.6	
14.3	8	18.1						19.0		18.1	
14.3	9	18.1						19.0		18.1	

12" UPPER CASE to 12" UPPER CASE

12		12.0	9.0	8.8	10.9	12.6	12.0	9.6	8.8	9.6	2.1	9.8	8.8	11.1	9.6	9.9	9.6	10.3	9.6
		A	J	T	V	W	Y	B	D	E	F	H	I	K	L	M	N	P	R	U	C	G	O	Q	S	X	Z
12.0	A	12.8						14.5																14.5			
9.6	B	12.0						12.7																12.0			
9.6	C	11.2						12.0																12.0			
9.6	D	12.0						12.7																12.0			
8.8	E	10.5						11.3																11.3			
8.8	F	10.5						11.3																11.3			
9.6	G	12.0						12.7																12.0			
9.6	H	12.0						12.7																12.7			
2.1	I	4.5						5.2																5.2			
9.0	J	11.5						12.1																12.1			
9.8	K	11.4						12.2																12.2			
8.8	L	9.6						11.3																11.3			
11.1	M	13.5						14.2																14.2			
9.6	N	12.0						12.7																12.7			
9.9	O	12.4						13.0																12.4			
9.6	P	12.0						12.7																12.0			
9.9	Q	12.4						13.0																12.4			
9.6	R	12.0						12.7																12.0			
9.6	S	12.0						12.7																12.0			
8.8	T	9.6						11.3																11.3			
9.6	U	12.0						12.7																12.7			
10.9	V	11.7						13.4																13.4			
12.6	W	13.4						15.0																15.0			
10.3	X	12.0						12.8																12.8			
12.0	Y	12.8						14.5																14.5			
9.6	Z	11.2						12.0																12.0			

12" DIGIT to 12" DIGIT

12		9.9	9.6					3.6	9.6	11.1	9.6
		0	2	3	6	8	9	1	5	4	7
9.9	0	12.4						13.0		12.4	
3.6	1	6.7						6.7		6.0	
9.6	2	12.0						12.7		12.0	
9.6	3	12.0						12.7		12.0	
11.1	4	13.5						13.5		11.9	
9.6	5	12.0						12.7		12.0	
9.6	6	12.0						12.7		12.0	
9.6	7	12.0						12.0		10.4	
9.6	8	12.0						12.7		12.0	
9.6	9	12.0						12.7		12.0	

10" UPPER CASE to 10" UPPER CASE

10		10.0	7.5	7.3	9.1	10.5	10.0	8.0	7.3	8.0	1.7	8.1	7.3	9.2	8.0	8.3	8.0	8.6	8.0
		A	J	T	V	W	Y	B	D	E	F	H	I	K	L	M	N	P	R	U	C	G	O	Q	S	X	Z
10.0	A	10.7						12.1																12.1			
8.0	B	10.0						10.6																10.0			
8.0	C	9.3						10.0																10.0			
8.0	D	10.0						10.6																10.0			
7.3	E	8.7						9.4																9.4			
7.3	F	8.7						9.4																9.4			
8.0	G	10.0						10.6																10.0			
8.0	H	10.0						10.6																10.6			
1.7	I	3.8						4.3																4.3			
7.5	J	9.6						10.1																10.1			
8.1	K	9.5						10.2																10.2			
7.3	L	8.0						9.4																9.4			
9.2	M	11.3						11.8																11.8			
8.0	N	10.0						10.6																10.6			
8.3	O	10.3						10.9																10.3			
8.0	P	10.0						10.6																10.0			
8.3	Q	10.3						10.9																10.3			
8.0	R	10.0						10.6																10.0			
8.0	S	10.0						10.6																10.0			
7.3	T	8.0						9.4																9.4			
8.0	U	10.0						10.6																10.6			
9.1	V	9.7						11.1																11.1			
10.5	W	11.2						12.5																12.5			
8.6	X	10.0						10.7																10.7			
10.0	Y	10.7						12.1																12.1			
8.0	Z	9.3						10.0																10.0			

10" DIGIT to 10" DIGIT

10		8.3	8.0					3.0	8.0	9.2	8.0
		0	2	3	6	8	9	1	5	4	7
8.3	0	10.3						10.9		10.3	
3.0	1	5.6						5.6		5.0	
8.0	2	10.0						10.6		10.0	
8.0	3	10.0						10.6		10.0	
9.2	4	11.3						11.3		9.9	
8.0	5	10.0						10.6		10.0	
8.0	6	10.0						10.6		10.0	
8.0	7	10.0						10.0		8.7	
8.0	8	10.0						10.6		10.0	
8.0	9	10.0						10.6		10.0	

8" UPPER CASE to 8" UPPER CASE

8		8.0	6.0	5.9	7.3	8.4	8.0	6.4	5.9	6.4	1.4	6.5	5.9	7.4	6.4	6.6	6.4	6.9	6.4
		A	J	T	V	W	Y	B	D	E	F	H	I	K	L	M	N	P	R	U	C	G	O	Q	S	X	Z
8.0	A	8.6						9.7																9.7			
6.4	B	8.0						8.4																8.0			
6.4	C	7.5						8.0																8.0			
6.4	D	8.0						8.4																8.0			
5.9	E	7.0						7.5																7.5			
5.9	F	7.0						7.5																7.5			
6.4	G	8.0						8.4																8.0			
6.4	H	8.0						8.4																8.4			
1.4	I	3.0						3.4																3.4			
6.0	J	7.7						8.1																8.1			
6.5	K	7.6						8.2																8.2			
5.9	L	6.4						7.5																7.5			
7.4	M	9.0						9.4																9.4			
6.4	N	8.0						8.4																8.4			
6.6	O	8.3						8.7																8.3			
6.4	P	8.0						8.4																8.0			
6.6	Q	8.3						8.7																8.3			
6.4	R	8.0						8.4																8.0			
6.4	S	8.0						8.4																8.0			
5.9	T	6.4						7.5																7.5			
6.4	U	8.0						8.4																8.4			
7.3	V	7.8						8.9																8.9			
8.4	W	8.9						10.0																10.0			
6.9	X	8.0						8.5																8.5			
8.0	Y	8.6						9.7																9.7			
6.4	Z	7.5						8.0																8.0			

8" DIGIT to 8" DIGIT

8		6.6	6.4					2.4	6.4	7.4	6.4
		0	2	3	6	8	9	1	5	4	7
6.6	0	8.3						8.7		8.3	
2.4	1	4.4						4.4		4.0	
6.4	2	8.0						8.4		8.0	
6.4	3	8.0						8.4		8.0	
7.4	4	9.0						9.0		7.9	
6.4	5	8.0						8.4		8.0	
6.4	6	8.0						8.4		8.0	
6.4	7	8.0						8.0		6.9	
6.4	8	8.0						8.4		8.0	
6.4	9	8.0						8.4		8.0	

6" UPPER CASE to 6" UPPER CASE

6		6.0	4.5	4.4	5.4	6.3	6.0	4.8	4.4	4.8	1.0	4.9	4.4	5.5	4.8	5.0	4.8	5.2	4.8
		A	J	T	V	W	Y	B	D	E	F	H	I	K	L	M	N	P	R	U	C	G	O	Q	S	X	Z
6.0	A	6.4						7.2																7.2			
4.8	B	6.0						6.3																6.0			
4.8	C	5.6						6.0																6.0			
4.8	D	6.0						6.3																6.0			
4.4	E	5.2						5.7																5.7			
4.4	F	5.2						5.7																5.7			
4.8	G	6.0						6.3																6.0			
4.8	H	6.0						6.3																6.3			
1.0	I	2.3						2.6																2.6			
4.5	J	5.7						6.1																6.1			
4.9	K	5.7						6.1																6.1			
4.4	L	4.8						5.7																5.7			
5.5	M	6.8						7.1																7.1			
4.8	N	6.0						6.3																6.3			
5.0	O	6.2						6.5																6.2			
4.8	P	6.0						6.3																6.0			
5.0	Q	6.2						6.5																6.2			
4.8	R	6.0						6.3																6.0			
4.8	S	6.0						6.3																6.0			
4.4	T	4.8						5.7																5.7			
4.8	U	6.0						6.3																6.3			
5.4	V	5.9						6.7																6.7			
6.3	W	6.7						7.5																7.5			
5.2	X	6.0						6.4																6.4			
6.0	Y	6.4						7.2																7.2			
4.8	Z	5.6						6.0																6.0			

6" DIGIT to 6" DIGIT

6		5.0	4.8					1.8	4.8	5.5	4.8
		0	2	3	6	8	9	1	5	4	7
5.0	0	6.2						6.5		6.2	
1.8	1	3.3						3.3		3.0	
4.8	2	6.0						6.3		6.0	
4.8	3	6.0						6.3		6.0	
5.5	4	6.8						6.8		5.9	
4.8	5	6.0						6.3		6.0	
4.8	6	6.0						6.3		6.0	
4.8	7	6.0						6.0		5.2	
4.8	8	6.0						6.3		6.0	
4.8	9	6.0						6.3		6.0	

4" UPPER CASE to 4" UPPER CASE

4		4.0	3.0	2.9	3.6	4.2	4.0	3.2	2.9	3.2	0.7	3.3	2.9	3.7	3.2	3.3	3.2	3.4	3.2
		A	J	T	V	W	Y	B	D	E	F	H	I	K	L	M	N	P	R	U	C	G	O	Q	S	X	Z
4.0	A	4.3						4.8																4.8			
3.2	B	4.0						4.2																4.0			
3.2	C	3.7						4.0																4.0			
3.2	D	4.0						4.2																4.0			
2.9	E	3.5						3.8																3.8			
2.9	F	3.5						3.8																3.8			
3.2	G	4.0						4.2																4.0			
3.2	H	4.0						4.2																4.2			
0.7	I	1.5						1.7																1.7			
3.0	J	3.8						4.0																4.0			
3.3	K	3.8						4.1																4.1			
2.9	L	3.2						3.8																3.8			
3.7	M	4.5						4.7																4.7			
3.2	N	4.0						4.2																4.2			
3.3	O	4.1						4.3																4.1			
3.2	P	4.0						4.2																4.0			
3.3	Q	4.1						4.3																4.1			
3.2	R	4.0						4.2																4.0			
3.2	S	4.0						4.2																4.0			
2.9	T	3.2						3.8																3.8			
3.2	U	4.0						4.2																4.2			
3.6	V	3.9						4.4																4.4			
4.2	W	4.5						5.0																5.0			
3.4	X	4.0						4.3																4.3			
4.0	Y	4.3						4.8																4.8			
3.2	Z	3.7						4.0																4.0			

4" DIGIT to 4" DIGIT

4		3.3	3.2					1.2	3.2	3.7	3.2
		0	2	3	6	8	9	1	5	4	7
3.3	0	4.1						4.3		4.1	
1.2	1	2.2						2.2		2.0	
3.2	2	4.0						4.2		4.0	
3.2	3	4.0						4.2		4.0	
3.7	4	4.5						4.5		4.0	
3.2	5	4.0						4.2		4.0	
3.2	6	4.0						4.2		4.0	
3.2	7	4.0						4.0		3.5	
3.2	8	4.0						4.2		4.0	
3.2	9	4.0						4.2		4.0	

ENGLISH UNITS

NOTE:

ALL DIMENSIONS ARE IN INCHES UNLESS OTHERWISE NOTED. SEE SHEETS 2 THROUGH 7 FOR CORRESPONDING METRIC UNITS.

COMMONWEALTH OF PENNSYLVANIA
DEPARTMENT OF TRANSPORTATION
BUREAU OF HIGHWAY SAFETY AND TRAFFIC ENGINEERING

SPACING CHARTS
DIRECT APPLIED LETTERS & NUMERALS

UPPER CASE
SERIES E (ENGLISH)

RECOMMENDED MAY 25, 2007
Glenn C Rowe
CHIEF, TRAFFIC ENGINEERING AND OPERATIONS DIVISION

RECOMMENDED MAY 25, 2007
M. C. Patel
CHIEF HIGHWAY ENGINEER

TC-8700C

18" UPPER CASE to 18" UPPER CASE

18		15.1	11.3	11.0	13.5	15.8	15.2	12.1	11.0	12.1	2.8	12.4	11.0	13.9	12.1	12.7	12.1
		A	J	T	V	W	Y	B	D	E	F	H	I	K	L	M	N	P	R	U	C	G	O	Q	S	X	Z
15.1	A	16.2						18.4																			18.4
12.1	B	15.5						16.3																			15.5
12.1	C	14.3						15.5																			15.5
12.1	D	15.5						16.3																			15.5
11.0	E	13.2						14.4																			14.4
11.0	F	13.2						14.4																			14.4
12.1	G	15.5						16.3																			15.5
12.1	H	15.5						16.3																			16.3
2.8	I	6.2						7.0																			7.0
11.3	J	14.6						15.5																			15.5
12.4	K	14.6						15.8																			15.8
11.0	L	12.1						14.4																			14.4
13.9	M	17.3						18.2																			18.2
12.1	N	15.5						16.3																			16.3
12.7	O	16.0						16.9																			16.0
12.1	P	15.5						16.3																			15.5
12.7	Q	16.0						16.9																			16.0
12.1	R	15.5						16.3																			15.5
12.1	S	15.5						16.3																			15.5
11.0	T	12.1						14.4																			14.4
12.1	U	15.5						16.3																			16.3
13.5	V	14.6						16.9																			16.9
15.8	W	16.9						19.1																			19.1
12.1	X	14.3						15.5																			15.5
15.2	Y	16.3						18.6																			18.6
12.1	Z	14.3						15.5																			15.5

18" DIGIT to 18" DIGIT

18		12.7	12.1					4.4	12.1	13.2	12.1
		0	2	3	6	8	9	1	5	4	7
12.7	0	16.0						16.9			16.0
4.4	1	8.6						8.6			7.8
12.1	2	15.5						16.3			15.5
12.1	3	15.5						16.3			15.5
13.2	4	16.6						16.6			14.3
12.1	5	15.5						16.3			15.5
12.1	6	15.5						16.3			15.5
12.1	7	15.5						15.5			13.2
12.1	8	15.5						16.3			15.5
12.1	9	15.5						16.3			15.5

12" UPPER CASE to 12" UPPER CASE

12		10.0	7.5	7.3	9.0	10.5	10.1	8.1	7.3	8.1	1.9	8.3	7.3	9.3	8.1	8.4	8.1
		A	J	T	V	W	Y	B	D	E	F	H	I	K	L	M	N	P	R	U	C	G	O	Q	S	X	Z
10.0	A	10.8						12.3																			12.3
8.1	B	10.3						10.9																			10.3
8.1	C	9.6						10.3																			10.3
8.1	D	10.3						10.9																			10.3
7.3	E	8.8						9.6																			9.6
7.3	F	8.8						9.6																			9.6
8.1	G	10.3						10.9																			10.3
8.1	H	10.3						10.9																			10.9
1.9	I	4.1						4.7																			4.7
7.5	J	9.8						10.3																			10.3
8.3	K	9.8						10.5																			10.5
7.3	L	8.1						9.6																			9.6
9.3	M	11.5						12.1																			12.1
8.1	N	10.3						10.9																			10.9
8.4	O	10.7						11.3																			10.7
8.1	P	10.3						10.9																			10.3
8.4	Q	10.7						11.3																			10.7
8.1	R	10.3						10.9																			10.3
8.1	S	10.3						10.9																			10.3
7.3	T	8.1						9.6																			9.6
8.1	U	10.3						10.9																			10.9
9.0	V	9.8						11.3																			11.3
10.5	W	11.3						12.8																			12.8
8.1	X	9.6						10.3																			10.3
10.1	Y	10.9						12.4																			12.4
8.1	Z	9.6						10.3																			10.3

12" DIGIT to 12" DIGIT

12		8.4	8.1					2.9	8.1	8.8	8.1
		0	2	3	6	8	9	1	5	4	7
8.4	0	10.7						11.3			10.7
2.9	1	5.7						5.7			5.2
8.1	2	10.3						10.9			10.3
8.1	3	10.3						10.9			10.3
8.8	4	11.1						11.1			9.6
8.1	5	10.3						10.9			10.3
8.1	6	10.3						10.9			10.3
8.1	7	10.3						10.3			8.8
8.1	8	10.3						10.9			10.3
8.1	9	10.3						10.9			10.3

10" UPPER CASE to 10" UPPER CASE

10		8.4	6.3	6.1	7.5	8.8	8.4	6.7	6.1	6.7	1.6	6.9	6.1	7.7	6.7	7.0	6.7
		A	J	T	V	W	Y	B	D	E	F	H	I	K	L	M	N	P	R	U	C	G	O	Q	S	X	Z
8.4	A	9.0						10.2																			10.2
6.7	B	8.6						9.1																			8.6
6.7	C	8.0						8.6																			8.6
6.7	D	8.6						9.1																			8.6
6.1	E	7.3						8.0																			8.0
6.1	F	7.3						8.0																			8.0
6.7	G	8.6						9.1																			8.6
6.7	H	8.6						9.1																			9.1
1.6	I	3.4						3.9																			3.9
6.3	J	8.1						8.6																			8.6
6.9	K	8.1						8.8																			8.8
6.1	L	6.7						8.0																			8.0
7.7	M	9.6						10.1																			10.1
6.7	N	8.6						9.1																			9.1
7.0	O	8.9						9.4																			8.9
6.7	P	8.6						9.1																			8.6
7.0	Q	8.9						9.4																			8.9
6.7	R	8.6						9.1																			8.6
6.7	S	8.6						9.1																			8.6
6.1	T	6.7						8.0																			8.0
6.7	U	8.6						9.1																			9.1
7.5	V	8.1						9.4																			9.4
8.8	W	9.4						10.6																			10.6
6.7	X	8.0						8.6																			8.6
8.4	Y	9.1						10.3																			10.3
6.7	Z	8.0						8.6																			8.6

10" DIGIT to 10" DIGIT

10		7.0	6.7					2.4	6.7	7.3	6.7
		0	2	3	6	8	9	1	5	4	7
7.0	0	8.9						9.4			8.9
2.4	1	4.8						4.8			4.3
6.7	2	8.6						9.1			8.6
6.7	3	8.6						9.1			8.6
7.3	4	9.2						9.2			8.0
6.7	5	8.6						9.1			8.6
6.7	6	8.6						9.1			8.6
6.7	7	8.6						8.6			7.3
6.7	8	8.6						9.1			8.6
6.7	9	8.6						9.1			8.6

8" UPPER CASE to 8" UPPER CASE

8		6.7	5.0	4.9	6.0	7.0	6.8	5.4	4.9	5.4	1.3	5.5	4.9	6.2	5.4	5.6	5.4
		A	J	T	V	W	Y	B	D	E	F	H	I	K	L	M	N	P	R	U	C	G	O	Q	S	X	Z
6.7	A	7.2						8.2																			8.2
5.4	B	6.9						7.3																			6.9
5.4	C	6.4						6.9																			6.9
5.4	D	6.9						7.3																			6.9
4.9	E	5.9						6.4																			6.4
4.9	F	5.9						6.4																			6.4
5.4	G	6.9						7.3																			6.9
5.4	H	6.9						7.3																			7.3
1.3	I	2.8						3.1																			3.1
5.0	J	6.5						6.9																			6.9
5.5	K	6.5						7.0																			7.0
4.9	L	5.4						6.4																			6.4
6.2	M	7.7						8.1																			8.1
5.4	N	6.9						7.3																			7.3
5.6	O	7.1						7.5																			7.1
5.4	P	6.9						7.3																			6.9
5.6	Q	7.1						7.5																			7.1
5.4	R	6.9						7.3																			6.9
5.4	S	6.9						7.3																			6.9
4.9	T	5.4						6.4																			6.4
5.4	U	6.9						7.3																			7.3
6.0	V	6.5						7.5																			7.5
7.0	W	7.5						8.5																			8.5
5.4	X	6.4						6.9																			6.9
6.8	Y	7.3						8.3																			8.3
5.4	Z	6.4						6.9																			6.9

8" DIGIT to 8" DIGIT

8		5.6	5.4					1.9	5.4	5.9	5.4
		0	2	3	6	8	9	1	5	4	7
5.6	0	7.1						7.5			7.1
1.9	1	3.8						3.8			3.4
5.4	2	6.9						7.3			6.9
5.4	3	6.9						7.3			6.9
5.9	4	7.4						7.4			6.4
5.4	5	6.9						7.3			6.9
5.4	6	6.9						7.3			6.9
5.4	7	6.9						6.9			5.9
5.4	8	6.9						7.3			6.9
5.4	9	6.9						7.3			6.9

6" UPPER CASE to 6" UPPER CASE

6		5.0	3.8	3.7	4.5	5.3	5.1	4.0	3.7	4.0	0.9	4.1	3.7	4.6	4.0	4.2	4.0
		A	J	T	V	W	Y	B	D	E	F	H	I	K	L	M	N	P	R	U	C	G	O	Q	S	X	Z
5.0	A	5.4						6.1																			6.1
4.0	B	5.2						5.4																			5.2
4.0	C	4.8						5.2																			5.2
4.0	D	5.2						5.4																			5.2
3.7	E	4.4						4.8																			4.8
3.7	F	4.4						4.8																			4.8
4.0	G	5.2						5.4																			5.2
4.0	H	5.2						5.4																			5.4
0.9	I	2.1						2.4																			2.4
3.8	J	4.9						5.2																			5.2
4.1	K	4.9						5.2																			5.2
3.7	L	4.0						4.8																			4.8
4.6	M	5.8						6.1																			6.1
4.0	N	5.2						5.4																			5.4
4.2	O	5.3						5.6																			5.3
4.0	P	5.2						5.4																			5.2
4.2	Q	5.3						5.6																			5.3
4.0	R	5.2						5.4																			5.2
4.0	S	5.2						5.4																			5.2
3.7	T	4.0						4.8																			4.8
4.0	U	5.2						5.4																			5.4
4.5	V	4.9						5.6																			5.6
5.3	W	5.6						6.4																			6.4
4.0	X	4.8						5.2																			5.2
5.1	Y	5.4						6.2																			6.2
4.0	Z	4.8						5.2																			5.2

6" DIGIT to 6" DIGIT

6		4.2	4.0					1.5	4.0	4.4	4.0
		0	2	3	6	8	9	1	5	4	7
4.2	0	5.3						5.6			5.3
1.5	1	2.9						2.9			2.6
4.0	2	5.2						5.4			5.2
4.0	3	5.2						5.4			5.2
4.4	4	5.5						5.5			4.8
4.0	5	5.2						5.4			5.2
4.0	6	5.2						5.4			5.2
4.0	7	5.2						5.2			4.4
4.0	8	5.2						5.4			5.2
4.0	9	5.2						5.4			5.2

4" UPPER CASE to 4" UPPER CASE

4		3.3	2.5	2.4	3.0	3.5	3.4	2.7	2.4	2.7	0.6	2.8	2.4	3.1	2.7	2.8	2.7
		A	J	T	V	W	Y	B	D	E	F	H	I	K	L	M	N	P	R	U	C	G	O	Q	S	X	Z
3.3	A	3.6						4.1																			4.1
2.7	B	3.4						3.6																			3.4
2.7	C	3.2						3.4																			3.4
2.7	D	3.4						3.6																			3.4
2.4	E	2.9						3.2																			3.2
2.4	F	2.9						3.2																			3.2
2.7	G	3.4						3.6																			3.4
2.7	H	3.4						3.6																			3.6
0.6	I	1.4						1.6																			1.6
2.5	J	3.3						3.4																			3.4
2.8	K	3.3						3.5																			3.5
2.4	L	2.7						3.2																			3.2
3.1	M	3.8						4.0																			4.0
2.7	N	3.4						3.6																			3.6
2.8	O	3.6						3.8																			3.6
2.7	P	3.4						3.6																			3.4
2.8	Q	3.6						3.8																			3.6
2.7	R	3.4						3.6																			3.4
2.7	S	3.4						3.6																			3.4
2.4	T	2.7						3.2																			3.2
2.7	U	3.4						3.6																			3.6
3.0	V	3.3						3.8																			3.8
3.5	W	3.8						4.3																			4.3
2.7	X	3.2						3.4																			3.4
3.4	Y	3.6						4.1																			4.1
2.7	Z	3.2						3.4																			3.4

4" DIGIT to 4" DIGIT

4		2.8	2.7					1.0	2.7	2.9	2.7
		0	2	3	6	8	9	1	5	4	7
2.8	0	3.6						3.8			3.6
1.0	1	1.9						1.9			1.7
2.7	2	3.4						3.6			3.4
2.7	3	3.4						3.6			3.4
2.9	4	3.7						3.7			3.2
2.7	5	3.4						3.6			3.4
2.7	6	3.4						3.6			3.4
2.7	7	3.4						3.4			2.9
2.7	8	3.4						3.6			3.4
2.7	9	3.4						3.6			3.4

ENGLISH UNITS

NOTE:

ALL DIMENSIONS ARE IN INCHES UNLESS OTHERWISE NOTED. SEE SHEETS 2 THROUGH 7 FOR CORRESPONDING METRIC UNITS.

COMMONWEALTH OF PENNSYLVANIA
DEPARTMENT OF TRANSPORTATION
BUREAU OF HIGHWAY SAFETY AND TRAFFIC ENGINEERING

SPACING CHARTS
DIRECT APPLIED LETTERS & NUMERALS

UPPER CASE
SERIES D (ENGLISH)

RECOMMENDED MAY 25, 2007
Glenn C Rowe
CHIEF, TRAFFIC ENGINEERING AND OPERATIONS DIVISION

RECOMMENDED MAY 25, 2007
M. C. Patel
CHIEF HIGHWAY ENGINEER

TC-8700C

18" UPPER CASE to 18" UPPER CASE

18		11.3	9.0	11.0	13.5	11.3	9.8	9.0	9.8	2.5	9.8	9.0	11.7	9.8	10.4	9.8	10.6	9.8
		A	J	T	V	W	Y	B	D	E	F	H	I	K	L	M	N	P	R	U	C	G	O	Q	S	X	Z
11.3	A	12.3					14.3																		14.3		
9.8	B	12.9					13.6																		12.9		
9.8	C	11.9					12.9																		12.9		
9.8	D	12.9					13.6																		12.9		
9.0	E	11.0					12.0																		12.0		
9.0	F	11.0					12.0																		12.0		
9.8	G	12.9					13.6																		12.9		
9.8	H	12.9					13.6																		13.6		
2.5	I	5.6					6.3																		6.3		
9.0	J	12.0					12.8																		12.8		
9.8	K	11.9					12.9																		12.9		
9.0	L	10.0					12.0																		12.0		
11.7	M	14.7					15.5																		15.5		
9.8	N	12.9					13.6																		13.6		
10.4	O	13.5					14.2																		13.5		
9.8	P	12.9					13.6																		12.9		
10.4	Q	13.5					14.2																		13.5		
9.8	R	12.9					13.6																		12.9		
9.8	S	12.9					13.6																		12.9		
9.0	T	10.0					12.0																		12.0		
9.8	U	12.9					13.6																		13.6		
11.0	V	12.0					14.0																		14.0		
13.5	W	14.5					16.5																		16.5		
10.6	X	12.6					13.6																		13.6		
11.3	Y	12.3					14.3																		14.3		
9.8	Z	11.9					12.9																		12.9		

18" DIGIT to 18" DIGIT

18		10.4	9.8					3.7	9.8	11.0	9.8
		0	2	3	6	8	9	1	5	4	7
10.4	0	13.5						14.2			13.5
3.7	1	7.5						7.5			6.7
9.8	2	12.9						13.6			12.9
9.8	3	12.9						13.6			12.9
11.0	4	14.0						14.0			12.0
9.8	5	12.9						13.6			12.9
9.8	6	12.9						13.6			12.9
9.8	7	12.9						12.9			10.9
9.8	8	12.9						13.6			12.9
9.8	9	12.9						13.6			12.9

12" UPPER CASE to 12" UPPER CASE

12		7.5	6.0	7.3	9.0	9.5	7.5	6.6	6.0	6.6	1.7	6.6	6.0	7.8	6.6	6.9	6.6	7.0	6.6
		A	J	T	V	W	Y	B	D	E	F	H	I	K	L	M	N	P	R	U	C	G	O	Q	S	X	Z
7.5	A	8.2					9.5																		9.5		
6.6	B	8.6					9.1																		8.6		
6.6	C	7.9					8.6																		8.6		
6.6	D	8.6					9.1																		8.6		
6.0	E	7.4					8.0																		8.0		
6.0	F	7.4					8.0																		8.0		
6.6	G	8.6					9.1																		8.6		
6.6	H	8.6					9.1																		9.1		
1.7	I	3.7					4.2																		4.2		
6.0	J	8.0					8.5																		8.5		
6.6	K	7.9					8.6																		8.6		
6.0	L	6.7					8.0																		8.0		
7.8	M	9.8					10.3																		10.3		
6.6	N	8.6					9.1																		9.1		
6.9	O	9.0					9.5																		9.0		
6.6	P	8.6					9.1																		8.6		
6.9	Q	9.0					9.5																		9.0		
6.6	R	8.6					9.1																		8.6		
6.6	S	8.6					9.1																		8.6		
6.0	T	6.7					8.0																		8.0		
6.6	U	8.6					9.1																		9.1		
7.3	V	8.0					9.3																		9.3		
9.0	W	9.7					11.0																		11.0		
7.0	X	8.4					9.1																		9.1		
7.5	Y	8.2					9.5																		9.5		
6.6	Z	7.9					8.6																		8.6		

12" DIGIT to 12" DIGIT

12		6.9	6.6					2.4	6.6	7.3	6.6
		0	2	3	6	8	9	1	5	4	7
6.9	0	9.0						9.5			9.0
2.4	1	5.0						5.0			4.5
6.6	2	8.6						9.1			8.6
6.6	3	8.6						9.1			8.6
7.3	4	9.3						9.3			8.0
6.6	5	8.6						9.1			8.6
6.6	6	8.6						9.1			8.6
6.6	7	8.6						8.6			7.2
6.6	8	8.6						9.1			8.6
6.6	9	8.6						9.1			8.6

10" UPPER CASE to 10" UPPER CASE

10		6.3	5.0	6.1	7.5	6.3	5.5	5.0	5.5	1.4	5.5	5.0	6.5	5.5	5.8	5.5	5.9	5.5
		A	J	T	V	W	Y	B	D	E	F	H	I	K	L	M	N	P	R	U	C	G	O	Q	S	X	Z
6.3	A	6.8					7.9																		7.9		
5.5	B	7.2					7.6																		7.2		
5.5	C	6.6					7.2																		7.2		
5.5	D	7.2					7.6																		7.2		
5.0	E	6.1					6.7																		6.7		
5.0	F	6.1					6.7																		6.7		
5.5	G	7.2					7.6																		7.2		
5.5	H	7.2					7.6																		7.6		
1.4	I	3.1					3.5																		3.5		
5.0	J	6.7					7.1																		7.1		
5.5	K	6.6					7.2																		7.2		
5.0	L	5.6					6.7																		6.7		
6.5	M	8.2					8.6																		8.6		
5.5	N	7.2					7.6																		7.6		
5.8	O	7.5					7.9																		7.5		
5.5	P	7.2					7.6																		7.2		
5.8	Q	7.5					7.9																		7.5		
5.5	R	7.2					7.6																		7.2		
5.5	S	7.2					7.6																		7.2		
5.0	T	5.6					6.7																		6.7		
5.5	U	7.2					7.6																		7.6		
6.1	V	6.7					7.8																		7.8		
7.5	W	8.1					9.2																		9.2		
5.9	X	7.0					7.6																		7.6		
6.3	Y	6.8					7.9																		7.9		
5.5	Z	6.6					7.2																		7.2		

10" DIGIT to 10" DIGIT

10		5.8	5.5					2.0	5.5	6.1	5.5
		0	2	3	6	8	9	1	5	4	7
5.8	0	7.5						7.9			7.5
2.0	1	4.1						4.1			3.7
5.5	2	7.2						7.6			7.2
5.5	3	7.2						7.6			7.2
6.1	4	7.8						7.8			6.7
5.5	5	7.2						7.6			7.2
5.5	6	7.2						7.6			7.2
5.5	7	7.2						7.2			6.0
5.5	8	7.2						7.6			7.2
5.5	9	7.2						7.6			7.2

8" UPPER CASE to 8" UPPER CASE

8		5.0	4.0	4.9	6.0	5.0	4.4	4.0	4.4	1.1	4.4	4.0	5.2	4.4	4.6	4.4	4.7	4.4
		A	J	T	V	W	Y	B	D	E	F	H	I	K	L	M	N	P	R	U	C	G	O	Q	S	X	Z
5.0	A	5.4					6.3																		6.3		
4.4	B	5.7					6.1																		5.7		
4.4	C	5.3					5.7																		5.7		
4.4	D	5.7					6.1																		5.7		
4.0	E	4.9					5.3																		5.3		
4.0	F	4.9					5.3																		5.3		
4.4	G	5.7					6.1																		5.7		
4.4	H	5.7					6.1																		6.1		
1.1	I	2.5					2.8																		2.8		
4.0	J	5.3					5.7																		5.7		
4.4	K	5.3					5.7																		5.7		
4.0	L	4.4					5.3																		5.3		
5.2	M	6.5					6.9																		6.9		
4.4	N	5.7					6.1																		6.1		
4.6	O	6.0					6.3																		6.0		
4.4	P	5.7					6.1																		5.7		
4.6	Q	6.0					6.3																		6.0		
4.4	R	5.7					6.1																		5.7		
4.4	S	5.7					6.1																		5.7		
4.0	T	4.4					5.3																		5.3		
4.4	U	5.7					6.1																		6.1		
4.9	V	5.3					6.2																		6.2		
6.0	W	6.4					7.3																		7.3		
4.7	X	5.6					6.0																		6.0		
5.0	Y	5.4					6.3																		6.3		
4.4	Z	5.3					5.7																		5.7		

8" DIGIT to 8" DIGIT

8		4.6	4.4					1.6	4.4	4.9	4.4
		0	2	3	6	8	9	1	5	4	7
4.6	0	6.0						6.3			6.0
1.6	1	3.3						3.3			3.0
4.4	2	5.7						6.1			5.7
4.4	3	5.7						6.1			5.7
4.9	4	6.2						6.2			5.3
4.4	5	5.7						6.1			5.7
4.4	6	5.7						6.1			5.7
4.4	7	5.7						5.7			4.8
4.4	8	5.7						6.1			5.7
4.4	9	5.7						6.1			5.7

6" UPPER CASE to 6" UPPER CASE

6		3.8	3.0	3.7	4.5	3.8	3.3	3.0	3.3	0.8	3.3	3.0	3.9	3.3	3.5	3.3	3.5	3.3
		A	J	T	V	W	Y	B	D	E	F	H	I	K	L	M	N	P	R	U	C	G	O	Q	S	X	Z
3.8	A	4.1					4.8																		4.8		
3.3	B	4.3					4.5																		4.3		
3.3	C	4.0					4.3																		4.3		
3.3	D	4.3					4.5																		4.3		
3.0	E	3.7					4.0																		4.0		
3.0	F	3.7					4.0																		4.0		
3.3	G	4.3					4.5																		4.3		
3.3	H	4.3					4.5																		4.5		
0.8	I	1.9					2.1																		2.1		
3.0	J	4.0					4.3																		4.3		
3.3	K	4.0					4.3																		4.3		
3.0	L	3.3					4.0																		4.0		
3.9	M	4.9					5.2																		5.2		
3.3	N	4.3					4.5																		4.5		
3.5	O	4.5					4.7																		4.5		
3.3	P	4.3					4.5																		4.3		
3.5	Q	4.5					4.7																		4.5		
3.3	R	4.3					4.5																		4.3		
3.3	S	4.3					4.5																		4.3		
3.0	T	3.3					4.0																		4.0		
3.3	U	4.3					4.5																		4.5		
3.7	V	4.0					4.7																		4.7		
4.5	W	4.8					5.5																		5.5		
3.5	X	4.2					4.5																		4.5		
3.8	Y	4.1					4.8																		4.8		
3.3	Z	4.0					4.3																		4.3		

6" DIGIT to 6" DIGIT

6		3.5	3.3					1.2	3.3	3.7	3.3
		0	2	3	6	8	9	1	5	4	7
3.5	0	4.5						4.7			4.5
1.2	1	2.5						2.5			2.2
3.3	2	4.3						4.5			4.3
3.3	3	4.3						4.5			4.3
3.7	4	4.7						4.7			4.0
3.3	5	4.3						4.5			4.3
3.3	6	4.3						4.5			4.3
3.3	7	4.3						4.3			3.6
3.3	8	4.3						4.5			4.3
3.3	9	4.3						4.5			4.3

4" UPPER CASE to 4" UPPER CASE

4		2.5	2.0	2.4	3.0	2.5	2.2	2.0	2.2	0.6	2.2	2.0	2.6	2.2	2.3	2.2	2.3	2.2
		A	J	T	V	W	Y	B	D	E	F	H	I	K	L	M	N	P	R	U	C	G	O	Q	S	X	Z
2.5	A	2.7					3.2																		3.2		
2.2	B	2.9					3.0																		2.9		
2.2	C	2.6					2.9																		2.9		
2.2	D	2.9					3.0																		2.9		
2.0	E	2.5					2.7																		2.7		
2.0	F	2.5					2.7																		2.7		
2.2	G	2.9					3.0																		2.9		
2.2	H	2.9					3.0																		3.0		
0.6	I	1.2					1.4																		1.4		
2.0	J	2.7					2.8																		2.8		
2.2	K	2.6					2.9																		2.9		
2.0	L	2.2					2.7																		2.7		
2.6	M	3.3					3.4																		3.4		
2.2	N	2.9					3.0																		3.0		
2.3	O	3.0					3.2																		3.0		
2.2	P	2.9					3.0																		2.9		
2.3	Q	3.0					3.2																		3.0		
2.2	R	2.9					3.0																		2.9		
2.2	S	2.9					3.0																		2.9		
2.0	T	2.2					2.7																		2.7		
2.2	U	2.9					3.0																		3.0		
2.4	V	2.7					3.1																		3.1		
3.0	W	3.2					3.7																		3.7		
2.3	X	2.8					3.0																		3.0		
2.5	Y	2.7					3.2																		3.2		
2.2	Z	2.6					2.9																		2.9		

4" DIGIT to 4" DIGIT

4		2.3	2.2					0.8	2.2	2.4	2.2
		0	2	3	6	8	9	1	5	4	7
2.3	0	3.0						3.2			3.0
0.8	1	1.7						1.7			1.5
2.2	2	2.9						3.0			2.9
2.2	3	2.9						3.0			2.9
2.4	4	3.1						3.1			2.7
2.2	5	2.9						3.0			2.9
2.2	6	2.9						3.0			2.9
2.2	7	2.9						2.9			2.4
2.2	8	2.9						3.0			2.9
2.2	9	2.9						3.0			2.9

ENGLISH UNITS

NOTE:

ALL DIMENSIONS ARE IN INCHES UNLESS OTHERWISE NOTED. SEE SHEETS 2 THROUGH 7 FOR CORRESPONDING METRIC UNITS.

COMMONWEALTH OF PENNSYLVANIA
DEPARTMENT OF TRANSPORTATION
BUREAU OF HIGHWAY SAFETY AND TRAFFIC ENGINEERING

SPACING CHARTS
DIRECT APPLIED LETTERS & NUMERALS

UPPER CASE
SERIES C (ENGLISH)

RECOMMENDED MAY 25, 2007
Glenn C Rowe
CHIEF, TRAFFIC ENGINEERING AND OPERATIONS DIVISION

RECOMMENDED MAY 25, 2007
M. C. Patel
CHIEF HIGHWAY ENGINEER

SHT. 16 OF 18

TC-8700C

| 10" UPPER CASE to 10" UPPER CASE | | |

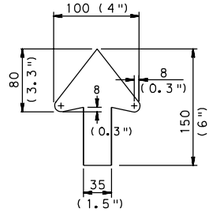

TYPE P

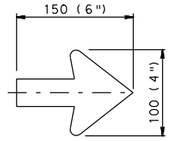

TYPE Q

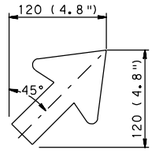

TYPE R

FOR DETAIL OF ARROW, SEE TYPE P

DESTINATION SIGN ARROWS (100 mm (4") LEGEND)

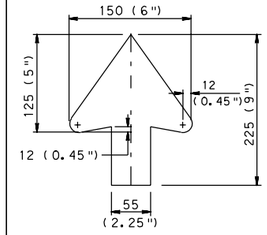

TYPE S

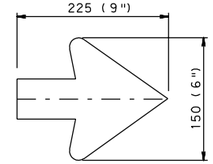

TYPE T

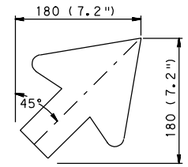

TYPE U

FOR DETAIL OF ARROW, SEE TYPE S

DESTINATION SIGN ARROWS (150 mm (6") LEGEND)

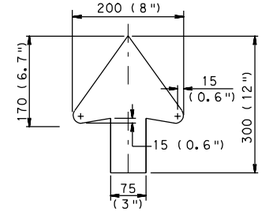

TYPE K

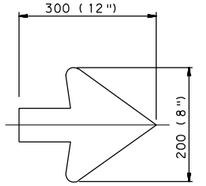

TYPE L

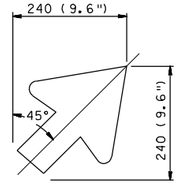

TYPE M

FOR DETAIL OF ARROW, SEE TYPE K

FREEWAY / EXPRESSWAY RAMP SIGNING

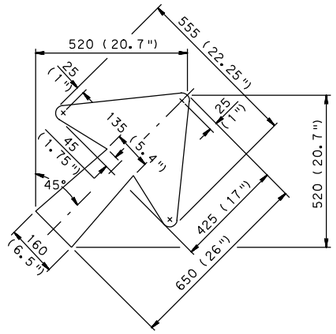

TYPE A

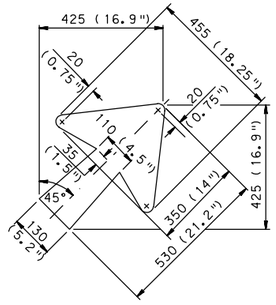

TYPE B

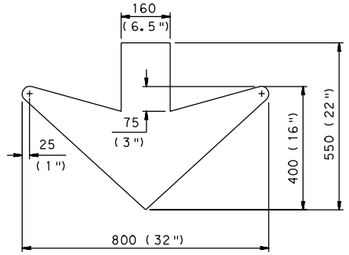

TYPE C

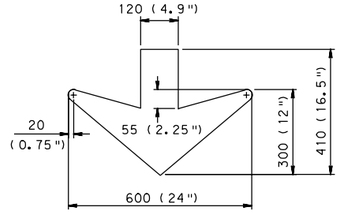

TYPE D

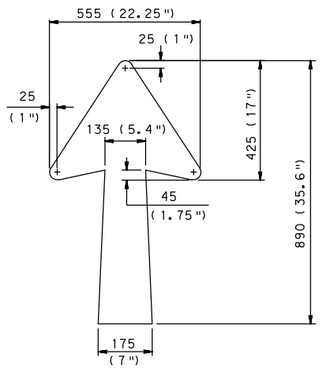

TYPE E

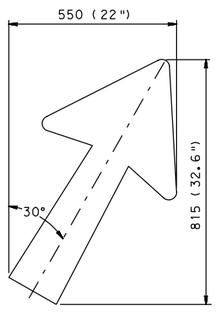

FOR DETAIL OF ARROW, SEE TYPE E.

TYPE F

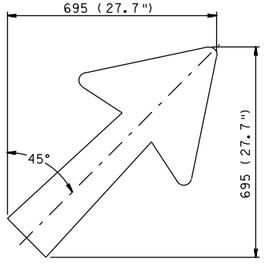

FOR DETAIL OF ARROW, SEE TYPE E.

TYPE G

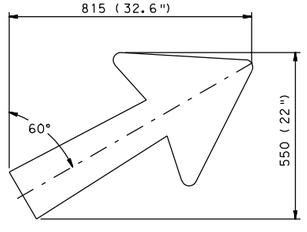

FOR DETAIL OF ARROW, SEE TYPE E.

TYPE H

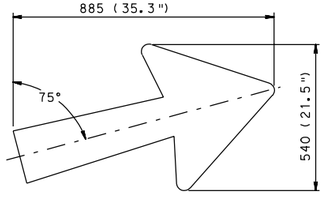

FOR DETAIL OF ARROW, SEE TYPE E.

TYPE I

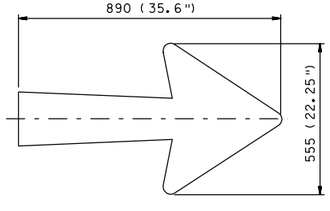

FOR DETAIL OF ARROW, SEE TYPE E.

TYPE J

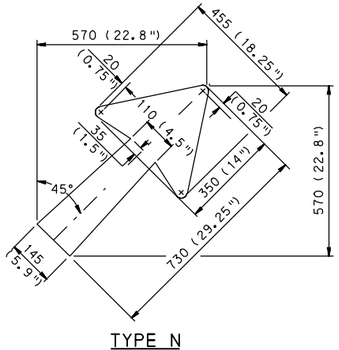

TYPE N

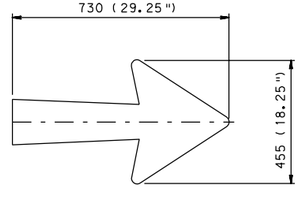

FOR DETAIL OF ARROW, SEE TYPE N.

TYPE O

FREEWAY / EXPRESSWAY SIGNING

NOTES:

1. ARROW TYPES A THROUGH J, N AND O ARE FOR USE ON FREEWAY AND EXPRESSWAY SIGNS.
2. ARROW TYPES K, L AND M ARE FOR USE ON FREEWAY AND EXPRESSWAY RAMP SIGNS.
3. ARROW TYPES P, Q AND R ARE FOR USE ON DESTINATION SIGNS WITH 100 mm (4") LEGEND.
4. ARROW TYPES S, T AND U ARE FOR USE ON DESTINATION SIGNS WITH 150 mm (6") LEGEND.
5. ALL DIMENSIONS ARE IN MILLIMETERS UNLESS OTHERWISE NOTED. ENGLISH UNITS IN PARENTHESIS ( ).
6. EITHER ALL METRIC OR ALL ENGLISH UNITS MUST BE USED ON PLANS. METRIC AND ENGLISH UNITS SHOWN MAY NOT BE MIXED.

COMMONWEALTH OF PENNSYLVANIA
DEPARTMENT OF TRANSPORTATION
BUREAU OF HIGHWAY SAFETY AND TRAFFIC ENGINEERING

SPACING CHARTS DIRECT APPLIED

ARROWS

RECOMMENDED MAY 25, 2007
Glenn C Rowe
CHIEF, TRAFFIC ENGINEERING AND OPERATIONS DIVISION

RECOMMENDED MAY 25, 2007
M. C. Patel
CHIEF HIGHWAY ENGINEER

SHT. 18 OF 18

TC-8700C

SIGNING PLANS

1. THE SIGNING PLANS SHOULD BE DRAWN TO A SCALE OF 1 : 1000 (1" = 100'). A PLAN VIEW OF THE SIGNS AND SIGN SUPPORTS SHOULD BE DEPICTED AT THE APPROXIMATE LOCATIONS AND SMALL PICTORIAL DRAWINGS OF THE SIGN FACES SHOULD BE INCLUDED NEAR THE PLAN VIEW, ALONG WITH THE TYPE OF POST AND/OR SUPPORT. A NUMBER SHALL BE ASSIGNED TO EACH SIGN NOT INCLUDED IN THE DEPARTMENT'S PUBLICATION 236M AND CROSS-REFERENCED TO THE SIGN FABRICATION DETAILS.

2. ALL SIGNS SHALL BE DESIGNED IN ACCORDANCE TO THE LAYOUT DETAILS INCLUDED IN TRAFFIC STANDARD TC-8701D.

3. SIGN LIGHTING SHOULD BE INCLUDED FOR ALL OVERHEAD GUIDE SIGNS EXCEPT SIGNS ON TANGENT ROADWAYS WHERE MOTORISTS HAVE A CLEARVIEW OF THE SIGN FOR A MINIMUM OF 240 m (800') AND WHERE THE VERTICAL ALIGNMENT IS SUCH THAT LOW BEAM HEADLIGHTS WILL ILLUMINATE THE SIGNS.

DESCRIPTION OF SIGNS

1. MAJOR GUIDE SIGNS PROVIDE MOTORISTS ADVANCE INFORMATION ON THE PRINCIPAL DESTINATIONS SERVED BY THE INTERCHANGE. TWO OR THREE MAJOR GUIDE SIGNS SHOULD BE USED, WITH TYPICAL PLACEMENT BEING 3.2 km (2 miles), 1.6 km (1 mile) AND 0.8 km (0.5 mile) IN ADVANCE OF THE EXIT. THE FOLLOWING INFORMATION SHOULD BE DISPLAYED ON MAJOR GUIDE SIGNS, BEGINNING FROM THE TOP OF THE SIGN.

   A. AN EXIT PANEL WHEN THE EXIT IS NUMBERED. THE PANEL SHOULD BE ON THE RIGHT SIDE FOR RIGHT-HAND EXITS, AND ON THE LEFT SIDE FOR LEFT-HAND EXITS.

   B. A SHIELD FOR EACH NUMBERED TRAFFIC ROUTE ASSIGNED TO THE CROSSING ROUTE OR WHICH IS VERY CLOSE TO THE INTERCHANGE. A CARDINAL DIRECTION SHOULD BE ASSOCIATED WITH EACH ROUTE WHERE TRAFFIC CAN ONLY GO IN ONE DIRECTION, AND THE WORD "TO" SHOULD BE USED ABOVE THE SHIELD OF ROUTES WHICH ARE CLOSE TO THE INTERCHANGE.

   C. THE NAME OF THE TWO NEAREST COMMUNITIES AS IDENTIFIED ON THE OFFICIAL TRANSPORTATION MAP, ONE TO THE LEFT AND ONE TO THE RIGHT, UNLESS ALTERNATE DESTINATIONS ARE APPROVED IN ACCORDANCE WITH DEPARTMENT POLICY. AT SINGLE EXIT INTERCHANGES, THE COMMUNITY NAME TO THE LEFT SHOULD BE ABOVE THE COMMUNITY NAME TO THE RIGHT; AT DOUBLE EXIT INTERCHANGES, THE TOP NAME SHOULD BE THE COMMUNITY SERVED BY THE FIRST EXIT. IN URBAN AREAS, THE STREET NAME SHOULD BE USED IN LIEU OF COMMUNITY NAMES.

   D. THE DISTANCE TO THE EXIT IN MILES AND/OR FRACTIONS OF MILES SHOULD BE SHOWN BELOW THE COMMUNITY NAMES OR THE STREET NAME. FRACTIONS SHOULD TYPICALLY BE SHOWN TO THE NEAREST 1/4 MILE, ALTHOUGH THE FRACTIONS "1/8" AND "3/8" ARE ACCEPTABLE. THE WORD "EXIT" OR "EXITS" SHOULD PRECEDE THE DISTANCE IF THE EXIT IS NOT NUMBERED.

2. A SUPPLEMENTAL GUIDE SIGN MAY INCLUDE ONE OR TWO DESTINATIONS, WHICH MAY BE A LARGE COMMUNITY NOT IDENTIFIED ON THE MAJOR GUIDE SIGNS OR ANY OTHER LARGE TRAFFIC GENERATOR IN ACCORDANCE WITH DEPARTMENT POLICY.

3. SERVICE SIGNS ARE USED TO IDENTIFY GAS, FOOD, LODGING, CAMPING, VISITOR INFORMATION, HOSPITAL, DIESEL, AND STATE POLICE. WITH THE EXCEPTION OF STATE POLICE, GENERAL MOTORIST SERVICE SIGNS INSTALLED ON NEW PANELS SHALL BE THE SYMBOL TYPE AS ILLUSTRATED IN TRAFFIC STANDARD TC-8701D.

   AS AN ALTERNATE TO GENERAL MOTORISTS SERVICE SIGNS, LOGO SIGNS MAY BE INSTALLED ON SELECTED INTERSTATE HIGHWAYS AND OTHER FREEWAYS IN ACCORDANCE WITH DEPARTMENT POLICY. WHEN LOGO SIGNS ARE INSTALLED, ALL GENERAL MOTORIST SERVICE SIGNS WILL BE REMOVED, UNLESS A SPECIFIC SERVICE IS NOT REPRESENTED BY A LOGO SIGN.

4. EXIT DIRECTION SIGNS SHOULD INCLUDE THE SAME TRAFFIC ROUTES AND DESTINATIONS AS INCLUDED ON THE MAJOR GUIDE SIGNS, AS APPROPRIATE, PLUS AN UPWARD-POINTING OR SLANTING ARROW. THE ALIGNMENT OF THE ARROW SHOULD APPROXIMATE THE ANGLE RELATED TO THE SHARPNESS OF THE TURN.

5. GORE SIGNS SHALL BE LOCATED IN THE AREA BETWEEN THE MAIN ROADWAY AND THE RAMP AT ALL EXITS. THE SIGNS SHALL HAVE THE WORD "EXIT" AND AN ARROW; IF THE EXIT IS NUMBERED, THE NUMBER OR NUMBER AND LETTER SHOULD ALSO BE INCLUDED.

6. CONFIRMATION ROUTE MARKERS SHOULD NOT BE USED BETWEEN CLOSELY SPACED INTERCHANGES OR WHEN A "PULL-THRU SIGN" FOLLOWS THE INTERCHANGE.

7. OFF-RAMP DIRECTIONAL SIGNS ARE USED ON ALL DIAMOND INTERCHANGE OFF-RAMPS, AND SHOULD INCLUDE ALL DESTINATIONS INCLUDED ON THE MAJOR AND SUPPLEMENTAL GUIDE SIGNS. THE DISTANCE IN THE NEAREST NUMBER OF WHOLE MILES TO THE DESTINATION SHOULD BE INCLUDED IF THE DESTINATION IS OVER 3.2 km (2 miles) AWAY, WHERE THE DISTANCE IS THE DISTANCE TO THE CENTER OF THE COMMUNITY OR ENTRANCE TO THE TRAFFIC GENERATOR.

8. POST-INTERCHANGE DISTANCE SIGNS SHOULD BE USED IN RURAL AREAS AND WHERE UNDUE REPETITION OF MESSAGES WILL NOT OCCUR. WHEN USED, IT SHOULD INCLUDE TWO OR THREE DESTINATION POINTS AND THE DISTANCES IN THE NEAREST NUMBER OF WHOLE MILES TO THOSE POINTS. THE FIRST DESTINATION SHOULD BE THE CLOSEST MEANINGFUL COMMUNITY WHICH IS NEAR AN INTERCHANGE; THE LAST DESTINATION IS THE NEAREST NATIONAL CONTROL CITY; AND AN INTERMEDIATE DESTINATION MAY BE INCLUDED BETWEEN THE TWO OTHER DESTINATIONS. CONSIDERATION MAY ALSO BE GIVEN TO INCLUDING MAJOR INTERSECTING HIGHWAY ROUTES AS DESTINATIONS USING THE ROUTE NUMBER (i.e., PA 30, US 30, etc.) EXCEPT PA TURNPIKE MAY BE USED. SHIELDS ARE NOT REQUIRED.

9. NEXT ( ) EXITS AREA SIGNS MAY BE USED IN ADVANCE OF MORE THAN THREE INTERCHANGES SERVING AN URBAN AREA OR HISTORICAL OR RECREATIONAL REGION. INTERCHANGE SEQUENCE SERIES SIGNS MAY BE USED PRIOR TO ALL BUT THE LAST INTERCHANGE.

10. INTERCHANGE SEQUENCE SIGNS ARE USED IN LARGE URBAN AREAS WHEN THE INTERCHANGES ARE CLOSELY SPACED IN ORDER TO IDENTIFY THE NEXT TWO OR THREE INTERCHANGES. WHEN USED, THE INTERCHANGE SEQUENCE SIGNS SHOULD NORMALLY BE INSTALLED IN THE MEDIAN OR ON AN OVERHEAD STRUCTURE. THEY FREQUENTLY CAN BE INSTALLED BACK-TO-BACK, ONE IN EACH DIRECTION.

11. COMMUNITY INTERCHANGES IDENTIFICATION SIGNS MAY BE USED FOR SUBURBAN OR RURAL COMMUNITIES SERVED BY TWO OR THREE INTERCHANGES. THE SIGN IS IDENTICAL TO THE INTERCHANGE SEQUENCE SIGN EXCEPT THE NAME OF THE COMMUNITY AND THE WORD "EXITS" IS SHOWN ON THE TOP OF THE SIGN. THE SIGN SHOULD BE LOCATED IN ADVANCE OF THE FIRST INTERCHANGE FOR THE COMMUNITY.

12. LANE ASSIGNMENT SIGNS MAY BE USED TO ASSIGN A PARTICULAR LANE FOR A GIVEN DESTINATION. A DOWN ARROW IS NORMALLY USED, BUT ALTERNATE MESSAGES SUCH AS "LEFT LANE", "RIGHT LANES", ETC. MAY BE USED.

13. PULL-THRU SIGNS MAY BE USED WHEN THE GEOMETRICS OF THE INTERCHANGE ARE COMPLEX, SUCH AS AT THE JUNCTION OF FREEWAYS AND WHEN IT IS NOT CLEAR TO THE DRIVER WHICH ROADWAY IS THE THROUGH ROADWAY. A NATIONAL OR REGIONAL CONTROL CITY SHOULD BE USED AS THE DESTINATION. DOWN ARROWS MAY BE USED WHEN THE ALIGNMENT AND NUMBER OF THROUGH LANES IS NOT READILY EVIDENT. (PULL-THRU SIGNS ARE SIMILAR TO LANE ASSIGNMENT SIGNS BUT NEVER HAVE DISTANCES OR EXIT PANELS.)

14. EXIT ONLY PANELS SHOULD BE USED FOR ALL INTERCHANGE LANE DROPS AT WHICH THE THROUGH ROUTE IS CARRIED ON THE MAINLINE. EXIT ONLY PANELS SHOULD ALWAYS BE INSTALLED OVERHEAD, IN CONJUNCTION WITH LANE ASSIGNMENT SIGNS, EXIT DIRECTION SIGNS AND DIAGRAMMATIC SIGNS.

15. DIAGRAMMATIC SIGNS PROVIDE A GRAPHIC VIEW OF THE EXIT IN RELATIONSHIP TO THE MAIN HIGHWAY. THEY SHOULD BE USED FOR SPLITS HAVING OFF-RAMP MOVEMENTS TO THE LEFT, OPTIONAL LANE SPLITS, EXITS WITH ROUTE DISCONTINUITY, AND LEFT EXIT LANE DROPS; AND THEY ALSO MAY BE USED AT TWO-LANE EXITS WITH AN OPTIONAL LANE. DIAGRAMMATIC SIGNS SHOULD BE DESIGNED IN ACCORDANCE WITH THE STANDARD HIGHWAY SIGNS BOOK, AS PUBLISHED BY THE FEDERAL HIGHWAY ADMINISTRATION.

16. EXIT PANELS SHALL BE USED ON ALL MAJOR GUIDE, EXIT DIRECTION, LANE ASSIGNMENT, AND DIAGRAMMATIC SIGNS WHEN EXIT NUMBERS HAVE BEEN ASSIGNED. THE PLURAL "EXITS" SHOULD BE USED IN ADVANCE OF INTERCHANGES WITH MORE THAN ONE EXIT, ALONG WITH THE RAMP DESIGNATIONS "A-B" OR "B-A", DEPENDING UPON WHICH RAMP DESIGNATION IS SERVED FIRST. (WHEN THERE ARE TWO EXITS, THE FIRST ONE IN THE DIRECTION OF INCREASING DISTANCE MARKERS IS DESIGNATED AS "A", THE SECOND ONE AS "B".)

17. ADVISORY EXIT SPEED SIGNS (W13-2) AS DETAILED IN THE DEPARTMENT'S PUBLICATION 236M SHALL BE INSTALLED ALONGSIDE THE DECELERATION LANE, POSITIONED APPROXIMATELY AT THE MID-POINT.

18. NEXT EXIT ( ) MILES SIGN SHOULD BE USED BELOW THE ADVANCE GUIDE SIGN NEAREST THE INTERCHANGE (NORMALLY THE 1 MILE ADVANCE GUIDE SIGN) WHEN THE DISTANCE BETWEEN SUCCESSIVE RURAL INTERCHANGES IS MORE THAN 8 km (5 miles). THIS SIGN MAY BE FABRICATED AS AN INTEGRAL PART OF THE ADVANCE GUIDE SIGN OR MAY BE A SEPARATE SUPPLEMENTARY PANEL, WHEN A SEPARATE PANEL IS USED, ENSURE THAT IT IS INSTALLED ON THE POST ABOVE THE HINGE PLATE.

NOTE:

EITHER ALL METRIC OR ALL ENGLISH UNITS MUST BE USED ON PLANS. METRIC AND ENGLISH UNITS SHOWN MAY NOT BE MIXED.

COMMONWEALTH OF PENNSYLVANIA
DEPARTMENT OF TRANSPORTATION
BUREAU OF HIGHWAY SAFETY AND TRAFFIC ENGINEERING

INTERCHANGE ADVANCE SIGNING GENERAL NOTES

RECOMMENDED MAR. 18, 2008	RECOMMENDED MAR. 18, 2008	SHT. 1 OF 7
Allen C Rowe	Daryl R McClure	
CHIEF, TRAFFIC ENGINEERING AND OPERATIONS DIVISION	ACTING DIR. BUR. OF HIGHWAY SAFETY AND TRAFFIC ENGINEERING	TC-8701A

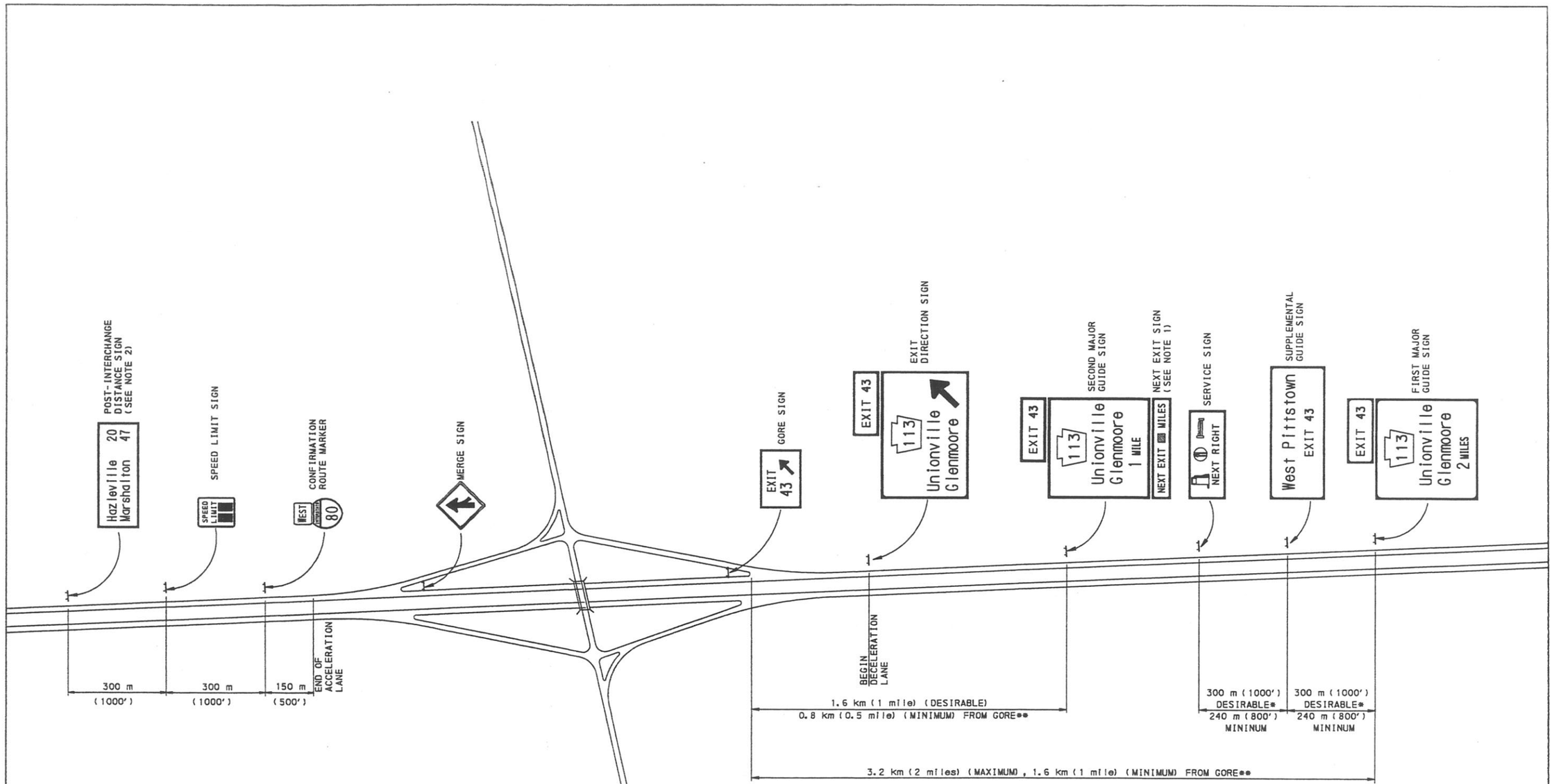

* WHEN SERVICE SIGN IS NOT USED, LOCATE SUPPLEMENTAL SIGN MIDWAY BETWEEN FIRST AND SECOND ADVANCE GUIDE SIGNS.

** DISTANCE INDICATED ON SIGN SHALL AGREE WITH DISTANCE FROM GORE.

ALL MAJOR SIGNS AND SIGN STRUCTURES ARE TO BE FIELD LOCATED.

NOTES:

1. USE NEXT EXIT () MILES SIGN ONLY WHEN INTERCHANGES ARE 8 km (5 miles) OR MORE APART.
2. WHEN INSUFFICIENT SPACE EXISTS FOR ALL POST-INTERCHANGE SIGNS, THE DISTANCE SIGN SHOULD BE ELIMINATED FIRST.
3. EITHER ALL METRIC OR ALL ENGLISH UNITS MUST BE USED ON PLANS. METRIC AND ENGLISH UNITS SHOWN MAY NOT BE MIXED.

COMMONWEALTH OF PENNSYLVANIA
DEPARTMENT OF TRANSPORTATION
BUREAU OF HIGHWAY SAFETY AND TRAFFIC ENGINEERING

ADVANCE SIGNING DIAMOND INTERCHANGE (ONE EXIT)

RECOMMENDED MAR. 18, 2008	RECOMMENDED MAR. 18, 2008	SHT. 2 OF 7
CHIEF, TRAFFIC ENGINEERING AND OPERATIONS DIVISION	ACTING DIR. BUR. OF HIGHWAY SAFETY AND TRAFFIC ENGINEERING	TC-8701A

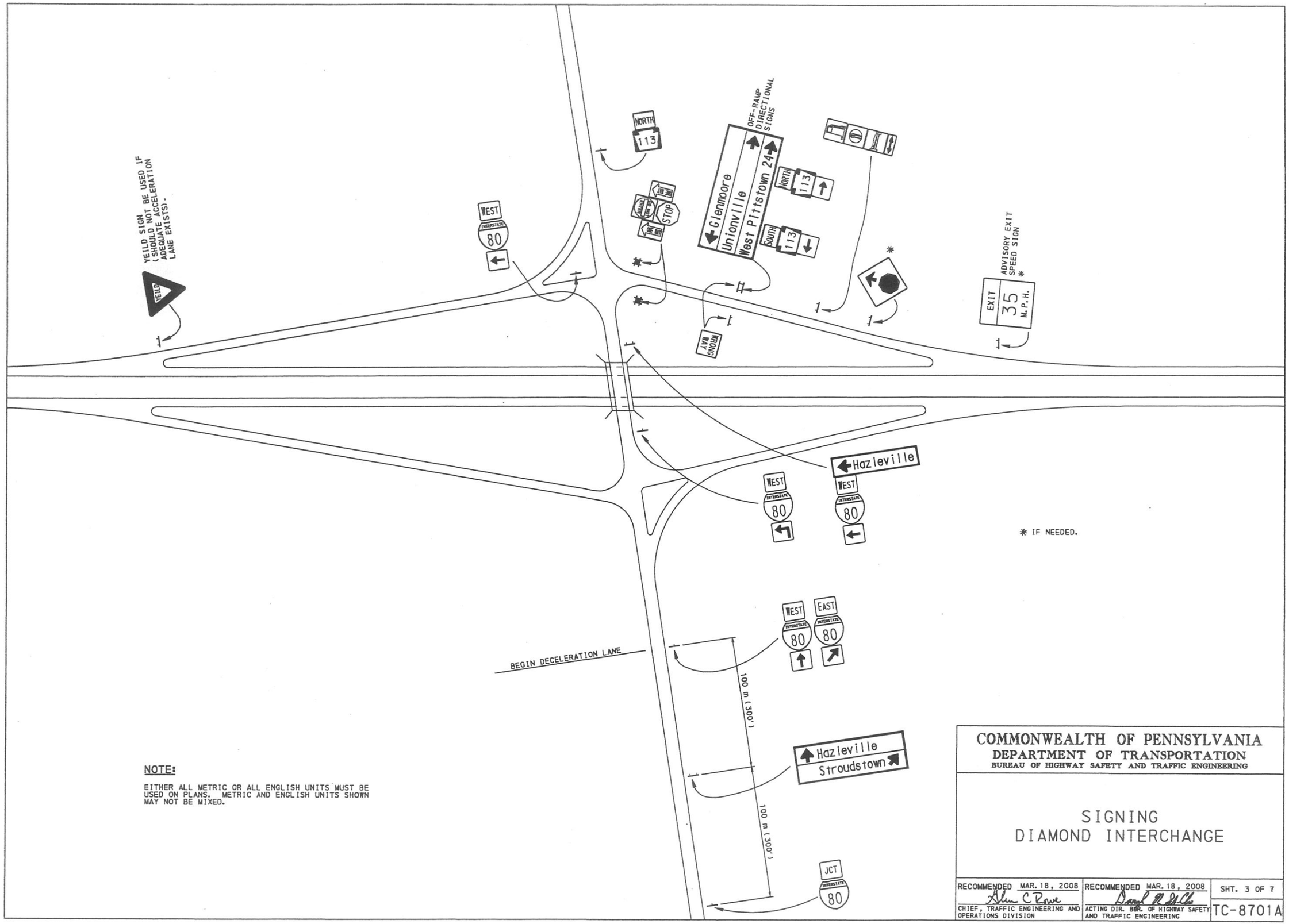

NOTE:

EITHER ALL METRIC OR ALL ENGLISH UNITS MUST BE USED ON PLANS. METRIC AND ENGLISH UNITS SHOWN MAY NOT BE MIXED.

COMMONWEALTH OF PENNSYLVANIA
DEPARTMENT OF TRANSPORTATION
BUREAU OF HIGHWAY SAFETY AND TRAFFIC ENGINEERING

SIGNING
DIAMOND INTERCHANGE

RECOMMENDED MAR. 18, 2008 Glen C Rowe CHIEF, TRAFFIC ENGINEERING AND OPERATIONS DIVISION	RECOMMENDED MAR. 18, 2008 Daryl R. St. Clair ACTING DIR. BUR. OF HIGHWAY SAFETY AND TRAFFIC ENGINEERING	SHT. 3 OF 7 TC-8701A

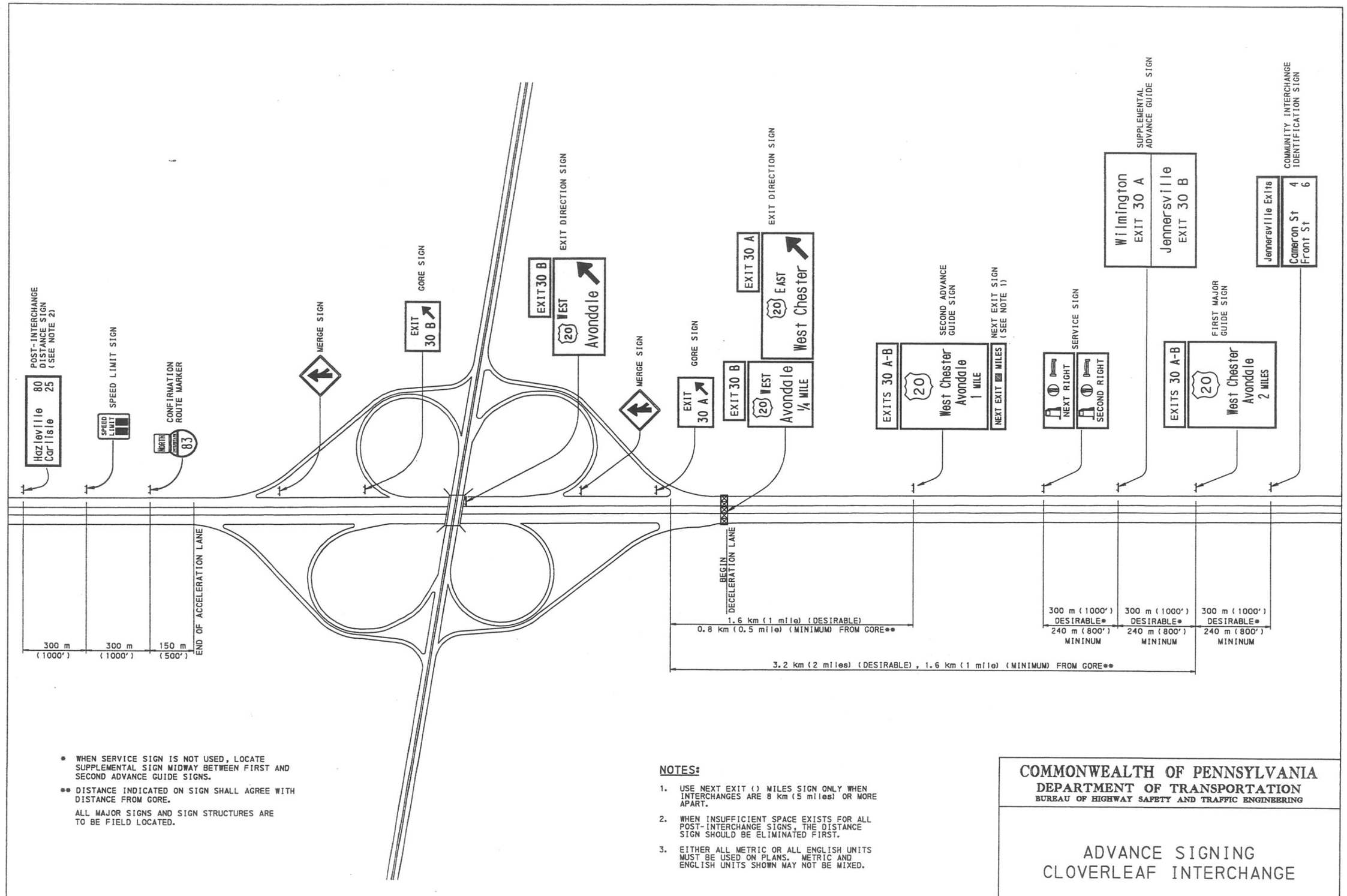

* WHEN SERVICE SIGN IS NOT USED, LOCATE SUPPLEMENTAL SIGN MIDWAY BETWEEN FIRST AND SECOND ADVANCE GUIDE SIGNS.

** DISTANCE INDICATED ON SIGN SHALL AGREE WITH DISTANCE FROM GORE.

ALL MAJOR SIGNS AND SIGN STRUCTURES ARE TO BE FIELD LOCATED.

NOTES:

1. USE NEXT EXIT () MILES SIGN ONLY WHEN INTERCHANGES ARE 8 km (5 miles) OR MORE APART.
2. WHEN INSUFFICIENT SPACE EXISTS FOR ALL POST-INTERCHANGE SIGNS, THE DISTANCE SIGN SHOULD BE ELIMINATED FIRST.
3. EITHER ALL METRIC OR ALL ENGLISH UNITS MUST BE USED ON PLANS. METRIC AND ENGLISH UNITS SHOWN MAY NOT BE MIXED.

COMMONWEALTH OF PENNSYLVANIA
DEPARTMENT OF TRANSPORTATION
BUREAU OF HIGHWAY SAFETY AND TRAFFIC ENGINEERING

ADVANCE SIGNING
CLOVERLEAF INTERCHANGE

RECOMMENDED MAR. 18, 2008 Glen C Rowe CHIEF, TRAFFIC ENGINEERING AND OPERATIONS DIVISION	RECOMMENDED MAR. 18, 2008 Daryl R. DeClo ACTING DIR. BUR. OF HIGHWAY SAFETY AND TRAFFIC ENGINEERING	SHT. 4 OF 7 TC-8701A

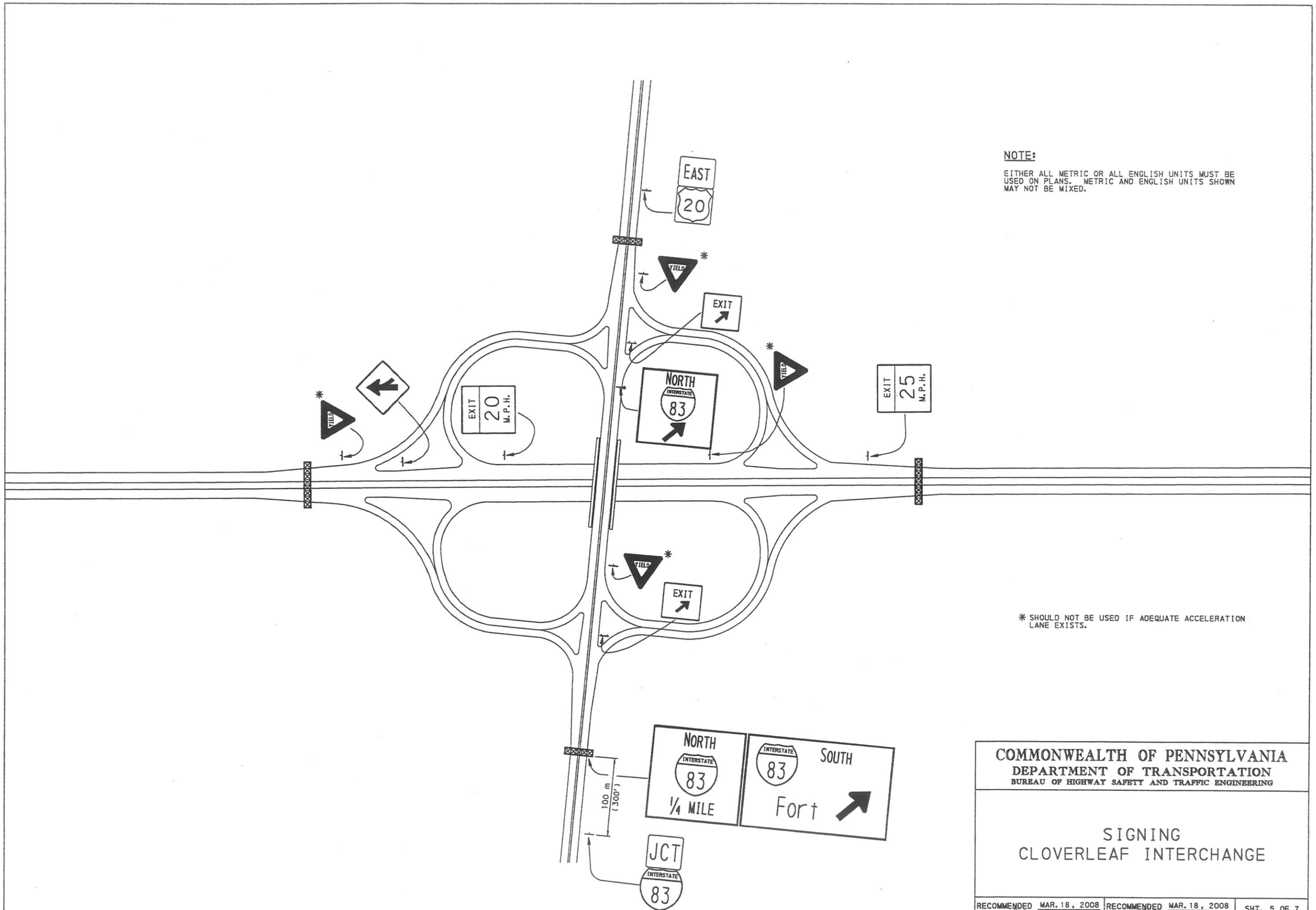

NOTE:

EITHER ALL METRIC OR ALL ENGLISH UNITS MUST BE USED ON PLANS. METRIC AND ENGLISH UNITS SHOWN MAY NOT BE MIXED.

* SHOULD NOT BE USED IF ADEQUATE ACCELERATION LANE EXISTS.

COMMONWEALTH OF PENNSYLVANIA
DEPARTMENT OF TRANSPORTATION
BUREAU OF HIGHWAY SAFETY AND TRAFFIC ENGINEERING

SIGNING
CLOVERLEAF INTERCHANGE

RECOMMENDED MAR. 18, 2008 Allen C Rowe CHIEF, TRAFFIC ENGINEERING AND OPERATIONS DIVISION	RECOMMENDED MAR. 18, 2008 Daryl R. Hall ACTING DIR. BUR. OF HIGHWAY SAFETY AND TRAFFIC ENGINEERING	SHT. 5 OF 7 TC-8701A

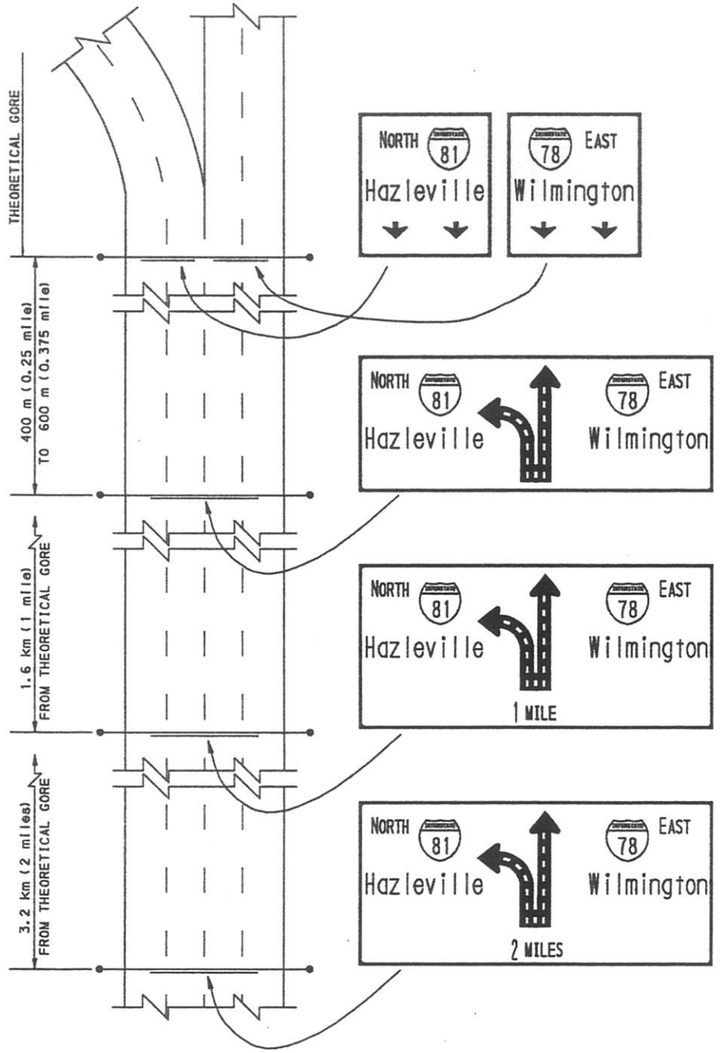

DIAGRAMMATIC SIGNING

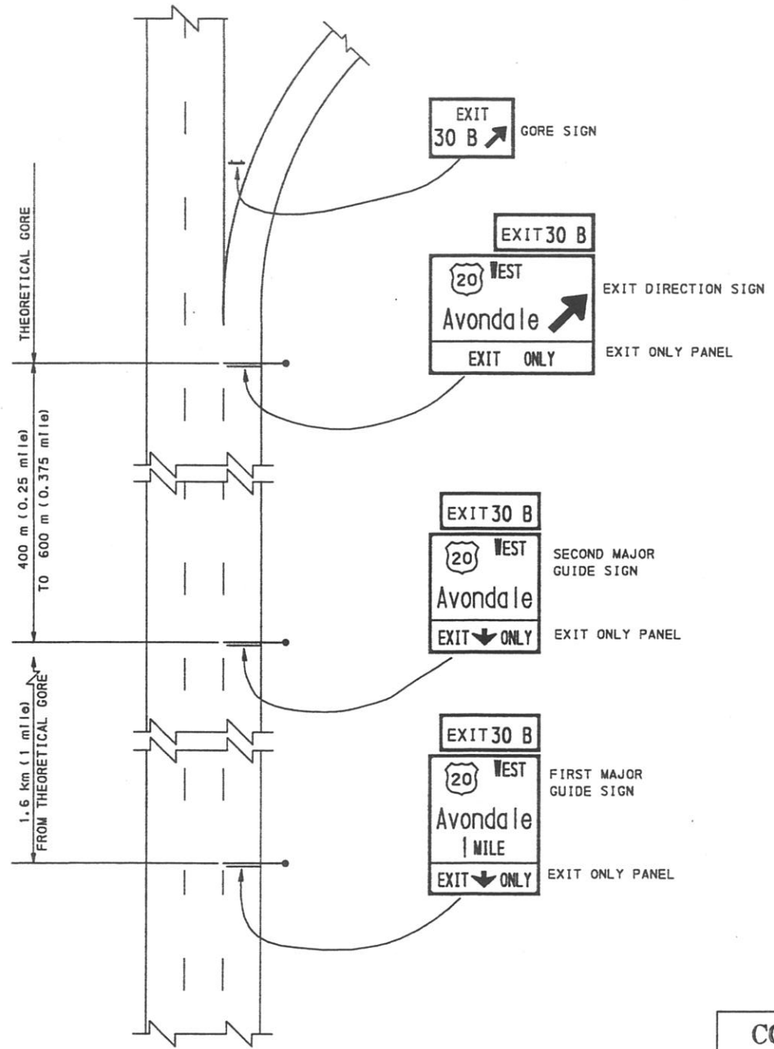

LANE DROP SIGNING

NOTE:

EITHER ALL METRIC OR ALL ENGLISH UNITS MUST BE USED ON PLANS. METRIC AND ENGLISH UNITS SHOWN MAY NOT BE MIXED.

COMMONWEALTH OF PENNSYLVANIA
DEPARTMENT OF TRANSPORTATION
BUREAU OF HIGHWAY SAFETY AND TRAFFIC ENGINEERING

SIGNING
DIAGRAMMATIC & LANE DROP

RECOMMENDED MAR. 18, 2008 CHIEF, TRAFFIC ENGINEERING AND OPERATIONS DIVISION	RECOMMENDED MAR. 18, 2008 ACTING DIR. BUR. OF HIGHWAY SAFETY AND TRAFFIC ENGINEERING	SHT. 6 OF 7 TC-8701A

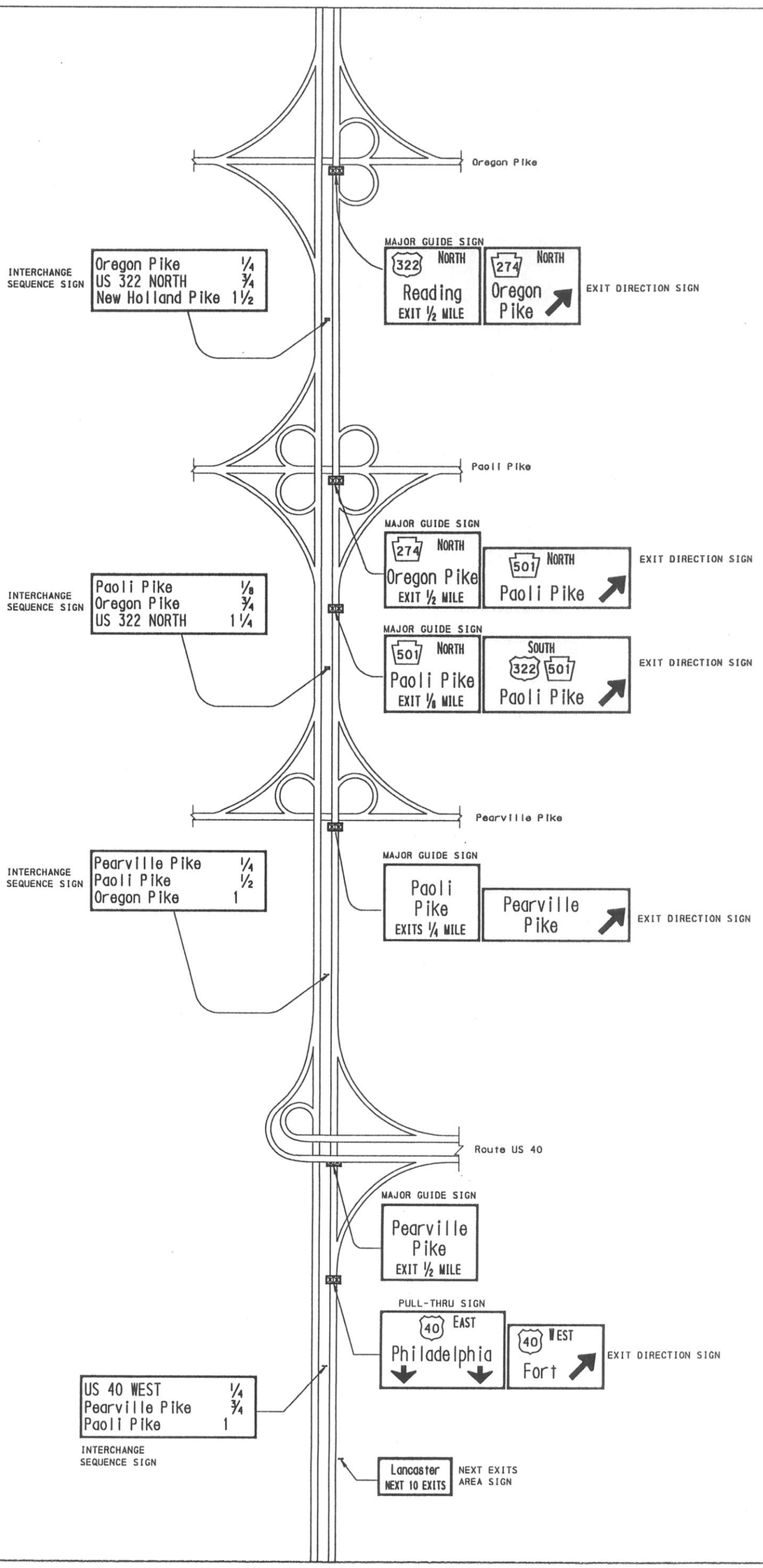

COMMONWEALTH OF PENNSYLVANIA
DEPARTMENT OF TRANSPORTATION
BUREAU OF HIGHWAY SAFETY AND TRAFFIC ENGINEERING

TYPICAL SIGNING
CLOSELY SPACED
INTERCHANGES

RECOMMENDED MAR. 18, 2008
CHIEF, TRAFFIC ENGINEERING AND OPERATIONS DIVISION

RECOMMENDED MAR. 18, 2008
ACTING DIRECTOR, BUREAU OF HIGHWAY SAFETY AND TRAFFIC ENGINEERING

TC-8701A SHT. 7 OF 7

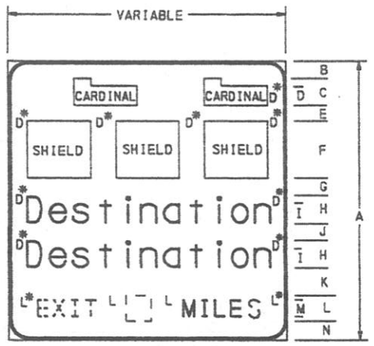

METRIC UNITS

DEST. SIZE	DEST. LINES	DIMENSIONS (MILLIMETERS)														
		A	B	C	D	E	F	G	H	I	J	K	L	M	N	N
500/375	1	4200	450	450	375	300	900	350	500	375		350	450	300	450	
500/375	2	4950	400	450	375	300	900	350	500	375	375	350	450	300	375	
400/300	1	3600	335	375	300	250	900	300	400	300		325	375	250	340	
400/300	2	4200	335	375	300	250	900	275	400	300	300	300	375	250	290	
330/250	1	3150	275	300	250	200	900	250	330	250		250	375	250	270	
330/250	2	3750	290	300	250	200	900	250	330	250	250	250	375	250	275	

ENGLISH UNITS

DEST. SIZE	DEST. LINES	DIMENSIONS (INCHES)													
		A	B	C	D	E	F	G	H	I	J	K	L	M	N
20/15	1	168	18	18	15	12	36	14	20	15		14	18	12	18
20/15	2	198	16	18	15	12	36	14	20	15	15	14	18	12	15
16/12	1	144	13.5	15	12	10	36	12	16	12		13	15	10	13.5
16/12	2	168	13.5	15	12	10	36	11	16	12	12	12	15	10	11.5
13.3/10	1	126	10.9	12	10	8	36	10	13.3	10		10	15	10	10.8
13.3/10	2	150	11.4	12	10	8	36	10	13.3	10	10	10	15	10	11

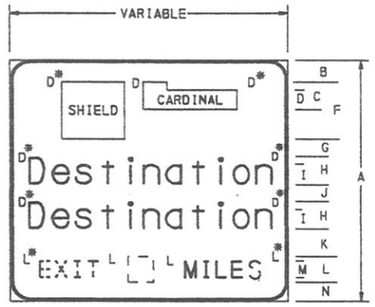

METRIC UNITS

DEST. SIZE	DEST. LINES	DIMENSIONS (MILLIMETERS)													
		A	B	C	D	F	G	H	I	J	K	L	M	N	
500/375	1	3300	375	450	375	900	350	500	375		350	450	300	375	
500/375	2	4200	385	450	375	900	350	500	375	375	350	450	300	390	
400/300	1	3000	335	375	300	900	325	400	300		325	375	250	340	
400/300	2	3600	310	375	300	900	300	400	300	300	300	375	250	315	
330/250	1	2700	295	300	250	900	250	330	250		250	375	250	300	
330/250	2	3300	305	300	250	900	250	330	250	250	250	375	250	310	

ENGLISH UNITS

DEST. SIZE	DEST. LINES	DIMENSIONS (INCHES)													
		A	B	C	D	F	G	H	I	J	K	L	M	N	
20/15	1	132	15	18	15	36	14	20	15		14	18	12	15	
20/15	2	168	15.5	18	15	36	14	20	15	15	14	18	12	15.5	
16/12	1	120	13.5	15	12	36	13	16	12		13	15	10	13.5	
16/12	2	144	12.5	15	12	36	12	16	12	12	12	15	10	12.5	
13.3/10	1	108	11.8	12	10	36	10	13.3	10		10	15	10	12.5	
13.3/10	2	132	12.2	12	10	36	10	13.3	10	10	10	15	10	12.2	

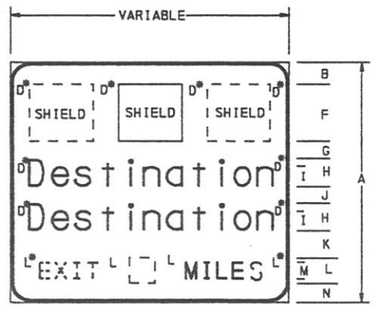

METRIC UNITS

DEST. SIZE	DEST. LINES	DIMENSIONS (MILLIMETERS)												
		A	B	D	F	G	H	I	J	K	L	M	N	
500/375	1	3300	375	375	900	350	500	375		350	450	300	375	
500/375	2	4200	385	375	900	350	500	375	375	350	450	300	390	
400/300	1	3000	335	300	900	325	400	300		325	375	250	340	
400/300	2	3600	310	300	900	300	400	300	300	300	375	250	315	
330/250	1	2700	295	250	900	250	330	250		250	375	250	300	
330/250	2	3300	305	250	900	250	330	250	250	250	375	250	310	

ENGLISH UNITS

DEST. SIZE	DEST. LINES	DIMENSIONS (INCHES)												
		A	B	D	F	G	H	I	J	K	L	M	N	
20/15	1	132	15	15	36	14	20	15		14	18	12	15	
20/15	2	168	15.5	15	36	14	20	15	15	14	18	12	15.5	
16/12	1	120	13.5	12	36	13	16	12		13	15	10	13.5	
16/12	2	144	12.5	12	36	12	16	12	12	12	15	10	12.5	
13.3/10	1	108	11.8	10	36	10	13.3	10		10	15	10	11.9	
13.3/10	2	132	12.2	10	36	10	13.3	10	10	10	15	10	12.2	

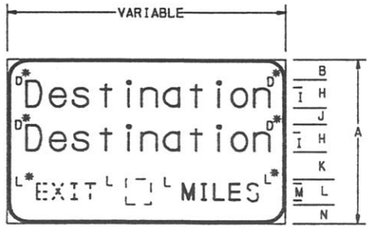

METRIC UNITS

DEST. SIZE	DEST. LINES	DIMENSIONS (MILLIMETERS)										
		A	B	D	H	I	J	K	L	M	N	
500/375	1	2100	400	375	500	375		350	450	300	400	
500/375	2	3000	410	375	500	375	375	350	450	300	415	
400/300	1	1800	350	300	400	300		325	375	250	350	
400/300	2	2400	310	300	400	300	300	300	375	250	315	
330/250	1	1500	270	250	330	250		250	375	250	275	
330/250	2	2100	280	250	330	250	250	250	375	250	285	

ENGLISH UNITS

DEST. SIZE	DEST. LINES	DIMENSIONS (INCHES)										
		A	B	D	H	I	J	K	L	M	N	
20/15	1	84	16	15	20	15		14	18	12	16	
20/15	2	120	16.5	15	20	15	15	14	18	12	16.5	
16/12	1	72	14	12	16	12		13	15	10	14	
16/12	2	96	12.5	12	16	12	12	12	15	10	12.5	
13.3/10	1	60	10.8	10	13.3	10		10	15	10	10.9	
13.3/10	2	84	11.2	10	13.3	10	10	10	15	10	11.2	

* INDICATES MINIMUM SPACING.

NOTES:

1. SIGN DIMENSIONS: WIDTHS AND HEIGHTS OF SIGNS SHALL BE IN MULTIPLES OF 150 mm (6"). THE SIGN HEIGHTS OF EXTRUDED ALUMINUM PANEL SIGNS ARE ACCEPTABLE IN MULTIPLES OF 152 mm (6"). THE INCREASED HEIGHTS OF SIGNS SHALL BE DISTRIBUTED EQUALLY BETWEEN THE LEGEND CLEARANCE DIMENSIONS AT THE TOP AND BOTTOM OF THE SIGN, WHEN THE USE OF EXTRUDED ALUMINUM PANELS RESULTS IN A VERTICAL SIGN DIMENSION GREATER THAN REQUIRED.
2. SINGLE SHIELD: WHEN MOUNTED ALONE, SHIELD SHALL BE CENTERED WITHIN THE WIDTH DIMENSION.
3. MULTIPLE SHIELDS: WHEN MULTIPLE SHIELDS ARE USED, THEY SHALL BE EVENLY SPACED WITHIN THE WIDTH DIMENSION AND SHALL BE ON THE SAME VERTICAL ALIGNMENT.
4. SINGLE SHIELD WITH CARDINAL DIRECTION: THE CARDINAL DIRECTION SHALL BE MOUNTED ON THE SAME SIDE OF THE SHIELD AS THE EXIT, WITH THE TOP LINE OF THE SHIELD AND THE CARDINAL AT THE SAME ELEVATION. CARDINALS MAY BE CENTERED OVER THE SHIELD WHEN THE SHIELD/CARDINAL BECOMES THE CONTROLLING LINE FOR THE WIDTH DIMENSION.
5. MULTIPLE SHIELDS AND CARDINALS: WHEN MULTIPLE SHIELDS ARE USED WITH CARDINALS, THE CARDINALS SHALL BE CENTERED OVER THE APPROPRIATE SHIELDS. A CARDINAL MAY BE CENTERED OVER TWO SHIELDS WHEN APPLICABLE.
6. DESTINATION: THE DESTINATION MESSAGE SHOULD ORDINARILY CONSIST OF NOT MORE THAN TWO DESTINATIONS. A DESTINATION MAY BE A CITY, TOWN OR VILLAGE NAME; A STREET NAME; OR THE NAME OF A LARGE TRAFFIC GENERATOR. FOR SUPPLEMENTAL GUIDE SIGNS, THE DESTINATION MAY BE ANY APPROVED SUPPLEMENTAL DESTINATION.
7. ACTION MESSAGE: THE ACTION MESSAGE SHALL CONSIST OF EITHER A DISTANCE INDICATION, A DIRECTION INDICATION, OR A LANE ASSIGNMENT ARROW.
8. EXIT PANELS: EXIT PANELS SHALL BE USED ON MAJOR GUIDE SIGNS WHENEVER EXIT NUMBERS HAVE BEEN ASSIGNED. WHEN USED, THEY SHALL BE INSTALLED ON THE SAME SIDE OF THE SIGN AS THE EXIT. WHEN EXIT PANELS ARE USED, THE WORD "EXIT" SHALL NOT BE USED IN THE MAIN SIGN'S ACTION MESSAGE.
9. EXIT ONLY PANELS: EXIT ONLY PANELS SHALL BE USED ONLY FOR A LANE DROP. THE PANELS SHALL BE YELLOW REFLECTORIZED BACKGROUND WITH BLACK LEGEND, AND SHALL BE DESIGNED TO FIT WITHIN THE WHITE BORDER OF THE COMPLETE SIGN PANEL. THE TOP OF THE EXIT ONLY PANEL SHOULD BE A MINIMUM OF 260 mm (10.5") BELOW THE BOTTOM OF THE LOWEST DESTINATION. SEE SHEET 5 OF THIS STANDARD FOR DETAILS OF EXIT PANELS.
10. INTERCHANGE CLASSIFICATION: FOR FREEWAY AND EXPRESSWAY SIGNING PURPOSES, INTERCHANGES ARE CLASSIFIED AS MAJOR OR INTERMEDIATE AS DEFINED BELOW:
    A. MAJOR/CATEGORY A -- INTERCHANGES WITH OTHER FREEWAYS OR EXPRESSWAYS.
    B. MAJOR/CATEGORY B -- INTERCHANGES WITH HIGH-VOLUME MULTILANE HIGHWAYS, PRINCIPAL URBAN ARTERIALS AND MAJOR RURAL ROUTES WHERE THE INTERCHANGING TRAFFIC IS HEAVY OR INCLUDES MANY DRIVERS UNFAMILIAR WITH THE AREA.
    C. INTERMEDIATE -- MOST INTERCHANGES WITH URBAN OR RURAL ROUTES.
11. LEGEND SIZES: WITH RESPECT TO NOTE 10, LETTER AND NUMERAL SIZES FOR ADVANCE GUIDE, EXIT DIRECTION, AND OVERHEAD SIGNS ARE:

LEGEND TYPE		FREEWAYS			EXPRESSWAYS			OVERHEAD SIGNS
		MAJOR		INTERMEDIATE	MAJOR		INTERMEDIATE	
		CAT. A	CAT. B		CAT. A	CAT. B		
CARDINAL DIRECTION	FIRST LETTER	450 (18")	450 (18")	375 (15")	450 (18")	375 (15")	300 (12")	375 (15")
	OTHER LETTERS	375 (15")	375 (15")	300 (12")	375 (15")	300 (12")	250 (10")	300 (12")
DESTINATION		500/375 (20"/15")	500/375 (20"/15")	400/300 (16"/12")	500/375 (20"/15")	400/300 (16"/12")	330/250 (13.3"/10")	400/300 (16"/12")
DISTANCE	NUMERAL	450 (18")	450 (18")	375 (15")	450 (18")	375 (15")	300 (12")	375 (15")
	WORD	300 (12")	300 (12")	250 (10")	300 (12")	250 (10")	250 (10")	250 (10")
ACTION MESSAGE		300 (12")	300 (12")	250 (10")	300 (12")	250 (10")	250 (10")	250 (10")

12. LEGEND SPACING: LEGEND SPACING SHALL FOLLOW THE PROCEDURES AND CHARTS SHOWN IN TC-8700C. SEE SHEET 9 OF THIS STANDARD FOR DESIGN DETAILS OF SHIELDS AND FOR THE SPACING OF CARDINAL DIRECTIONS.
13. SERIES: ALL UPPER CASE/LOWER CASE LEGEND SHALL BE DETAILED WITH CLEARVIEW FONTS AS SHOWN ON TC-8700C SHEETS 8 THROUGH 11. CLEARVIEW 5W SHALL BE USED FOR SIGNS ON NEW SUPPORTS AND INSTALLATIONS WHERE EXISTING SUPPORTS WILL ACCOMODATE A SIGN SIZED USING CLEARVIEW 5W, OTHERWISE USE CLEARVIEW 5WR. ALL CAPITAL LEGEND AND NUMERALS SHALL BE SERIES E, UNLESS OTHERWISE NOTED.
14. COLOR: UNLESS NOTED OTHERWISE, ALL SIGNS SHALL HAVE A GREEN REFLECTORIZED BACKGROUND WITH WHITE REFLECTORIZED LEGEND AND BORDER OF THE TYPE SPECIFIED IN SECTION 1103 OF PUBLICATION 408.
15. BORDERS: ALL SIGNS SHALL HAVE A 50 mm (2") BORDER WITH 300 mm (12") CORNER RADII, UNLESS OTHERWISE NOTED.
16. MUTCD: SIGN DETAILS SHALL COMPLY WITH THIS STANDARD DRAWING AND THE MANUAL ON UNIFORM TRAFFIC CONTROL DEVICES (MUTCD).
17. ALL DIMENSIONS ARE IN MILLIMETERS UNLESS OTHERWISE NOTED. ENGLISH UNITS IN PARENTHESIS ( ).
18. EITHER ALL METRIC OR ALL ENGLISH UNITS MUST BE USED ON PLANS. METRIC AND ENGLISH UNITS SHOWN MAY NOT BE MIXED.

COMMONWEALTH OF PENNSYLVANIA
DEPARTMENT OF TRANSPORTATION
BUREAU OF HIGHWAY SAFETY AND TRAFFIC ENGINEERING

SIGN DETAILS FREEWAY AND EXPRESSWAY GUIDE SIGNS

ADVANCE GUIDE SIGNS

RECOMMENDED MAR. 18, 2008
CHIEF, TRAFFIC ENGINEERING AND OPERATIONS DIVISION

RECOMMENDED MAR. 18, 2008
ACTING DIR. BUR. OF HIGHWAY SAFETY AND TRAFFIC ENGINEERING

SHT. 1 OF 9

TC-8701D

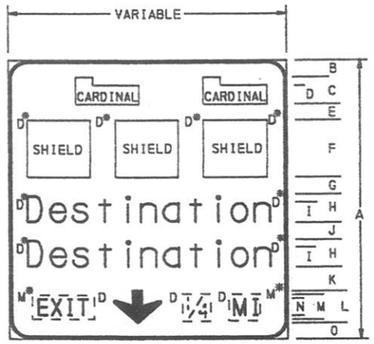

METRIC UNITS

DEST. SIZE	DEST. LINES	DIMENSIONS (MILLIMETERS)														
		A	B	C	D	E	F	G	H	I	J	K	L	M	N	O
500/375	1	4200	450	450	375	300	900	350	500	375		300	550	450	300	400
500/375	2	4950	400	450	375	300	900	350	500	375	375	300	550	450	300	325
400/300	1	3600	335	375	300	250	900	300	400	300		240	550	375	250	250
400/300	2	4200	310	375	300	250	900	275	400	300	300	215	550	375	250	225
330/250	1	3150	295	300	250	200	900	250	330	250		215	410	375	250	250
330/250	2	3750	305	300	250	200	900	250	330	250	250	225	410	375	250	250

ENGLISH UNITS

DEST. SIZE	DEST. LINES	DIMENSIONS (INCHES)														
		A	B	C	D	E	F	G	H	I	J	K	L	M	N	O
20/15	1	168	18	18	15	12	36	14	20	15		12	22	18	12	16
20/15	2	198	16	18	15	12	36	14	20	15	15	12	22	18	12	13
16/12	1	144	13.4	15	12	10	36	12	16	12		9.6	22	15	10	10
16/12	2	168	12.4	15	12	10	36	11	16	12	12	8.6	22	15	10	9
13.3/10	1	126	11.6	12	10	8	36	10	13.3	10		8.6	16.5	15	10	10
13.3/10	2	150	11.9	12	10	8	36	10	13.3	10	10	9	16.5	15	10	10

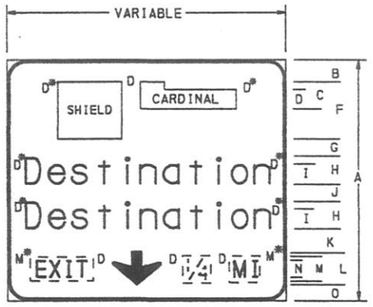

METRIC UNITS

DEST. SIZE	DEST. LINES	DIMENSIONS (MILLIMETERS)														
		A	B	C	D	F	G	H	I	J	K	L	M	N	O	
500/375	1	3300	375	450	375	900	350	500	375		300	550	450	300	325	
500/375	2	4200	385	450	375	900	350	500	375	375	300	550	450	300	340	
400/300	1	3000	335	375	300	900	325	400	300		240	550	375	250	250	
400/300	2	3600	300	375	300	900	300	400	300	300	215	550	375	250	235	
330/250	1	2700	300	300	250	900	250	330	250		235	410	375	250	275	
330/250	2	3300	310	300	250	900	250	330	250	250	235	410	375	250	285	

ENGLISH UNITS

DEST. SIZE	DEST. LINES	DIMENSIONS (INCHES)														
		A	B	C	D	F	G	H	I	J	K	L	M	N	O	
20/15	1	132	15	18	15	36	14	20	15		12	22	18	12	13	
20/15	2	168	15.4	18	15	36	14	20	15	15	12	22	18	12	13.6	
16/12	1	120	13.4	15	12	36	13	16	12		9.6	22	15	10	10	
16/12	2	144	12	15	12	36	12	16	12	12	8.6	22	15	10	9.4	
13.3/10	1	108	12	12	10	36	10	13.3	10		9.4	16.5	15	10	10.8	
13.3/10	2	132	12.4	12	10	36	10	13.3	10	10	9.4	16.5	15	10	11.1	

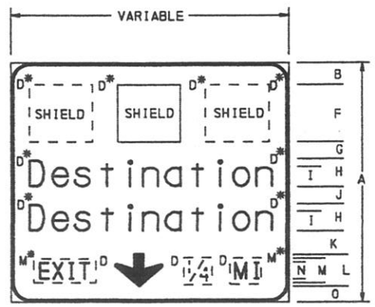

METRIC UNITS

DEST. SIZE	DEST. LINES	DIMENSIONS (MILLIMETERS)														
		A	B	D	F	G	H	I	J	K	L	M	N	O		
500/375	1	3300	375	375	900	350	500	375		300	550	450	300	325		
500/375	2	4200	385	375	900	350	500	375	375	300	550	450	300	340		
400/300	1	3000	335	300	900	325	400	300		240	550	375	250	250		
400/300	2	3600	300	300	900	300	400	300	300	215	550	375	250	235		
330/250	1	2700	300	250	900	250	330	250		235	410	375	250	275		
330/250	2	3300	310	250	900	250	330	250	250	235	410	375	250	285		

ENGLISH UNITS

DEST. SIZE	DEST. LINES	DIMENSIONS (INCHES)														
		A	B	D	F	G	H	I	J	K	L	M	N	O		
20/15	1	132	15	15	36	14	20	15		12	22	18	12	13		
20/15	2	168	15.4	15	36	14	20	15	15	12	22	18	12	13.6		
16/12	1	120	13.4	12	36	13	16	12		9.6	22	15	10	10		
16/12	2	144	12	12	36	12	16	12	12	8.6	22	15	10	9.4		
13.3/10	1	108	12	10	36	10	13.3	10		9.4	16.5	15	10	10.8		
13.3/10	2	132	12.4	10	36	10	13.3	10	10	9.4	16.5	15	10	11.1		

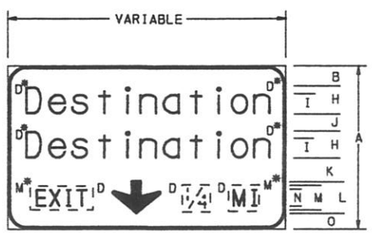

METRIC UNITS

DEST. SIZE	DEST. LINES	DIMENSIONS (MILLIMETERS)														
		A	B	D	H	I	J	K	L	M	N	O				
500/375	1	2100	400	375	500	375		300	550	450	300	350				
500/375	2	3000	410	375	500	375	375	300	550	450	300	365				
400/300	1	1800	350	300	400	300		240	550	375	250	260				
400/300	2	2400	310	300	400	300	300	215	550	375	250	225				
330/250	1	1500	280	250	330	250		235	410	375	250	245				
330/250	2	2100	285	250	330	250	250	235	410	375	250	260				

ENGLISH UNITS

DEST. SIZE	DEST. LINES	DIMENSIONS (INCHES)														
		A	B	D	H	I	J	K	L	M	N	O				
20/15	1	84	16	15	20	15		12	22	18	12	14				
20/15	2	120	16.4	15	20	15	15	12	22	18	12	14.6				
16/12	1	72	14	12	16	12		9.6	22	15	10	10.4				
16/12	2	96	12.4	12	16	12	12	8.6	22	15	10	9				
13.3/10	1	60	11	10	13.3	10		9.4	16.5	15	10	9.8				
13.3/10	2	84	11.2	10	13.3	10	10	9.4	16.5	15	10	10.3				

* INDICATES MINIMUM SPACING.

NOTES:

1. SIGNS ON THIS SHEET ARE TO BE USED OVERHEAD FOR LANE ASSIGNMENTS.
2. REFER TO TC-8700C FOR ARROW DETAILS. THE TYPE C ARROW SHALL BE USED FOR THE 500 mm / 375 mm (20"/15") AND 400 mm / 300 mm (16"/12") LEGEND SIZES, AND THE TYPE D ARROW SHALL BE USED FOR THE 330 mm / 250 mm (13.3"/10") LEGEND SIZE.
3. LANE ASSIGNMENT ARROW USAGE SHALL COMPLY WITH THE MOST CURRENT EDITION OF THE MANUAL ON UNIFORM TRAFFIC CONTROL DEVICES.
4. EITHER ALL METRIC OR ALL ENGLISH UNITS MUST BE USED ON PLANS. METRIC AND ENGLISH UNITS SHOWN MAY NOT BE MIXED.

COMMONWEALTH OF PENNSYLVANIA
DEPARTMENT OF TRANSPORTATION
BUREAU OF HIGHWAY SAFETY AND TRAFFIC ENGINEERING

SIGN DETAILS FREEWAY AND EXPRESSWAY GUIDE SIGNS

OVERHEAD LANE ASSIGNMENT SIGNS

RECOMMENDED MAR. 18, 2008	RECOMMENDED MAR. 18, 2008	SHT. 2 OF 9
CHIEF, TRAFFIC ENGINEERING AND OPERATIONS DIVISION	ACTING DIR. BUR. OF HIGHWAY SAFETY AND TRAFFIC ENGINEERING	TC-8701D

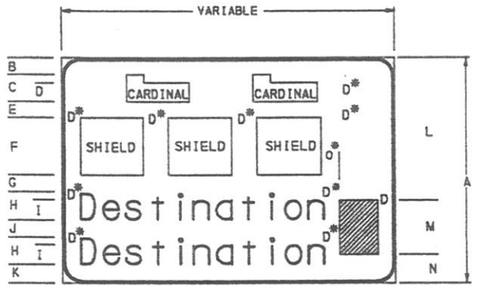

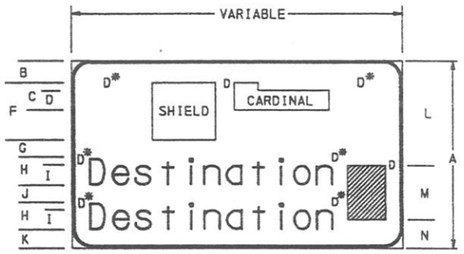

METRIC UNITS

DEST. SIZE	DEST. LINES	DIMENSIONS (MILLIMETERS)														
		A	B	C	D	E	F	G	H	I	J	K	L	M	N	O
500/375	1	3300	400	450	375	300	900	350	500	375		400	2085	815	400	
500/375	2	4200	415	450	375	300	900	350	500	375	375	410	2760	815	625	
400/300	1	2850	325	375	300	250	900	275	400	300		325	1710	815	325	200
400/300	2	3600	325	375	300	250	900	300	400	300	300	350	2310	815	475	
330/250	1	2550	285	300	250	200	900	250	330	250		285	1450	815	285	200
330/250	2	3150	295	300	250	200	900	250	330	250	250	295	1935	815	400	

ENGLISH UNITS

DEST. SIZE	DEST. LINES	DIMENSIONS (INCHES)														
		A	B	C	D	E	F	G	H	I	J	K	L	M	N	O
20/15	1	132	16	18	15	12	36	14	20	15		16	83.4	32.6	16	
20/15	2	168	16.6	18	15	12	36	14	20	15	15	16.4	110.4	32.6	25	
16/12	1	114	13	15	12	10	36	11	16	12		13	68.4	32.6	13	8
16/12	2	144	13	15	12	10	36	12	16	12	12	14	92.4	32.6	19	
13.3/10	1	102	11.3	12	10	8	36	10	13.3	10		11.4	58	32.6	11.4	8
13.3/10	2	126	11.7	12	10	8	36	10	13.3	10	10	11.7	77.4	32.6	16	

METRIC UNITS

DEST. SIZE	DEST. LINES	DIMENSIONS (MILLIMETERS)													
		A	B	C	D	F	G	H	I	J	K	L	M	N	
500/375	1	2550	400	450	375	900	350	500	375		400	1335	815	400	
500/375	2	3450	415	450	375	900	350	500	375	375	410	2010	815	625	
400/300	1	2250	325	375	300	900	300	400	300		325	1110	815	325	
400/300	2	3000	350	375	300	900	300	400	300	300	350	1710	815	475	
330/250	1	2100	300	300	250	900	275	330	250		295	990	815	295	
330/250	2	2700	310	300	250	900	275	330	250	250	305	1485	815	400	

ENGLISH UNITS

DEST. SIZE	DEST. LINES	DIMENSIONS (INCHES)													
		A	B	C	D	F	G	H	I	J	K	L	M	N	
20/15	1	102	16	18	15	36	14	20	15		16	53.4	32.6	16	
20/15	2	138	16.6	18	15	36	14	20	15	15	16.4	80.4	32.6	25	
16/12	1	90	13	15	12	36	12	16	12		13	44.4	32.6	13	
16/12	2	120	14	15	12	36	12	16	12	12	14	68.4	32.6	19	
13.3/10	1	84	12	12	10	36	11	13.3	10		11.7	39.6	32.6	11.8	
13.3/10	2	108	12.4	12	10	36	11	13.3	10	10	12	59.4	32.6	16	

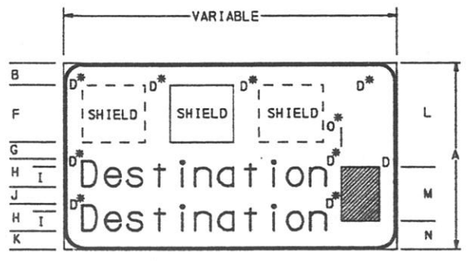

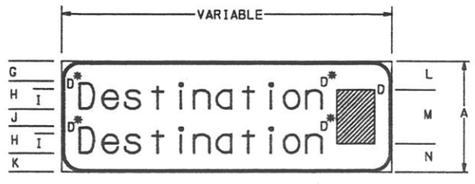

METRIC UNITS

DEST. SIZE	DEST. LINES	DIMENSIONS (MILLIMETERS)													
		A	D	G	H	I	J	K	L	M	N	O			
500/375	1	2550	400	450	375	900	350	500	375		400	1335	815	400	
500/375	2	3450	415	450	375	900	350	500	375	375	410	2010	815	625	
400/300	1	2250	325	375	300	900	300	400	300		325	1110	815	325	200
400/300	2	3000	350	375	300	900	300	400	300	300	350	1710	815	475	
330/250	1	2100	300	300	250	900	275	330	250		295	990	815	295	200
330/250	2	2700	310	300	250	900	275	330	250	250	305	1485	815	400	

ENGLISH UNITS

DEST. SIZE	DEST. LINES	DIMENSIONS (INCHES)													
		A	D	G	H	I	J	K	L	M	N	O			
20/15	1	102	16	18	15	36	14	20	15		16	53.4	32.6	16	
20/15	2	138	16.6	18	15	36	14	20	15	15	16.4	80.4	32.6	25	
16/12	1	90	13	15	12	36	12	16	12		13	44.4	32.6	13	8
16/12	2	120	14	15	12	36	12	16	12	12	14	68.4	32.6	19	
13.3/10	1	84	12	12	10	36	11	13.3	10		11.7	39.6	32.6	11.8	8
13.3/10	2	108	12.4	12	10	36	11	13.3	10	10	12	59.4	32.6	16	

METRIC UNITS

DEST. SIZE	DEST. LINES	DIMENSIONS (MILLIMETERS)											
		A	D	G	H	I	J	K	L	M	N		
500/375	1	1350	375	425	500	375		425	270	815	265		
500/375	2	2250	375	440	500	375	375	435	720	815	715		
400/300	1	1350	300	475	400	300		475	270	815	265		
400/300	2	1800	300	350	400	300	300	350	495	815	490		
330/250	1	1350	250	510	330	250		510	270	815	265		
330/250	2	1500	250	295	330	250	250	295	345	815	340		

ENGLISH UNITS

DEST. SIZE	DEST. LINES	DIMENSIONS (INCHES)											
		A	D	G	H	I	J	K	L	M	N		
20/15	1	54	15	17	20	15		17	10.8	32.6	10.6		
20/15	2	90	15	17.6	20	15	15	17.4	28.8	32.6	28.6		
16/12	1	54	12	19	16	12		19	10.8	32.6	10.6		
16/12	2	72	12	14	16	12	12	14	19.8	32.6	19.6		
13.3/10	1	54	10	20.4	13.3	10		20.3	10.8	32.6	10.6		
13.3/10	2	60	10	11.7	13.3	10	10	11.7	13.8	32.6	13.6		

* INDICATES MINIMUM SPACING.

NOTES:

1. REFER TO TC-8700C FOR ARROW DETAILS. TYPE F ARROW DIMENSIONS ARE SHOWN FOR ILLUSTRATIVE PURPOSES, BUT TYPE E THROUGH TYPE J ARROWS MAY ALSO BE USED FOR THE SIGNS SHOWN ON THIS SHEET.
2. EITHER ALL METRIC OR ALL ENGLISH UNITS MUST BE USED ON PLANS. METRIC AND ENGLISH UNITS SHOWN MAY NOT BE MIXED.

COMMONWEALTH OF PENNSYLVANIA
DEPARTMENT OF TRANSPORTATION
BUREAU OF HIGHWAY SAFETY AND TRAFFIC ENGINEERING

SIGN DETAILS
FREEWAY AND EXPRESSWAY GUIDE SIGNS

EXIT DIRECTION SIGNS

RECOMMENDED MAR. 18, 2008	RECOMMENDED MAR. 18, 2008	SHT. 3 OF 9
CHIEF, TRAFFIC ENGINEERING AND OPERATIONS DIVISION	ACTING DIR. BUR. OF HIGHWAY SAFETY AND TRAFFIC ENGINEERING	TC-8701D

NOTES:

1. THE GRAPHIC LEGEND SHALL BE OF A PLAN VIEW SHOWING A SIMPLIFIED OFF-RAMP ARRANGEMENT.
2. ONLY ONE DESTINATION MAY BE SHOWN FOR EACH ARROWHEAD, WITH A MAXIMUM OF TWO DESTINATIONS PER SIGN.
3. THE GRAPHIC SHOULD NOT DEPICT DECELERATION LANES. A BLACK ON YELLOW "EXIT ONLY" PANEL SHOULD BE USED TO SUPPLEMENT A LANE DROP GRAPHIC.
4. THE SHAFT FOR THE EXIT RAMP MOVEMENT SHOULD BE SHORTER THAN, BUT NOT SEPARATED FROM, THE THROUGH MOVEMENT GRAPHIC.
5. ARROW SHAFTS SHOULD CONTAIN LANE LINES WHERE APPROPRIATE AND ROUTE SHIELDS SHALL NOT BE USED AS A SUBSTITUTE FOR ARROWHEADS.
6. ROUTE SHIELDS, CARDINAL DIRECTIONS, AND DESTINATIONS SHOULD BE CLEARLY RELATED TO THE ARROWHEAD, AND THE ARROWHEAD SHOULD POINT TOWARD THE ROUTE SHIELD FOR THE OFF MOVEMENT.
7. THE CARDINAL DIRECTION SHOULD GENERALLY BE PLACED ADJACENT TO THE ROUTE SHIELD AND THE DESTINATION SHOULD BE PLACED BELOW AND JUSTIFIED WITH THE ROUTE SHIELD.
8. EXIT NUMBER PANELS SHOULD BE LOCATED TOWARD THE TOP LEFT EDGE OF THE SIGN FOR A LEFT EXIT AND TOWARD THE TOP RIGHT EDGE FOR RIGHT EXITS.
9. SPECIFIC DESIGN STANDARDS FOR GRAPHIC COMPONENTS AND OTHER RECOMMENDED FEATURES ARE SHOWN IN THIS STANDARD.
10. SEE SHEET 9 OF THIS STANDARD FOR SHIELD AND CARDINAL DETAILS.
11. SEE TC-8701A SHEET 6 FOR ADVANCE PLACEMENT OF SIGN.
12. ALL DIMENSIONS ARE IN MILLIMETERS UNLESS OTHERWISE NOTED. ENGLISH UNITS IN PARENTHESIS ( ).
13. EITHER ALL METRIC OR ALL ENGLISH UNITS MUST BE USED ON PLANS. METRIC AND ENGLISH UNITS SHOWN MAY NOT BE MIXED.

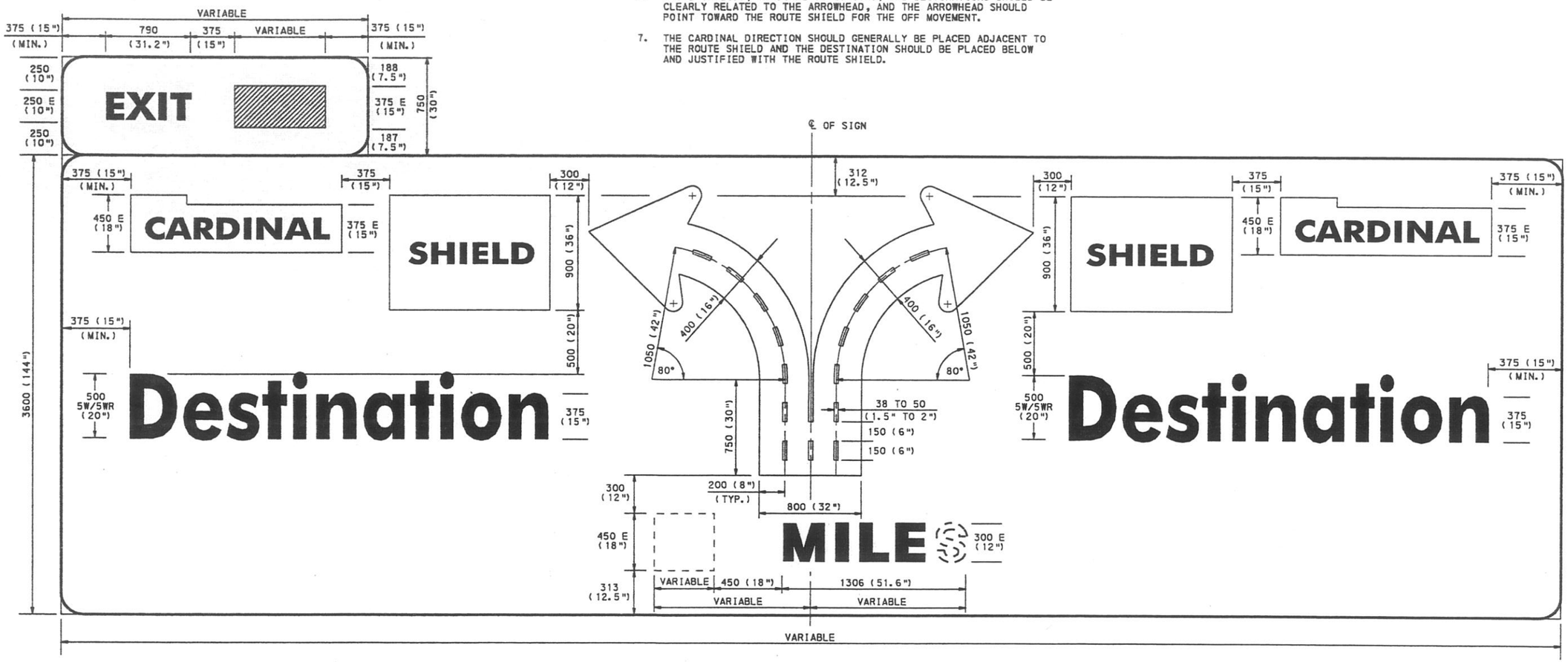

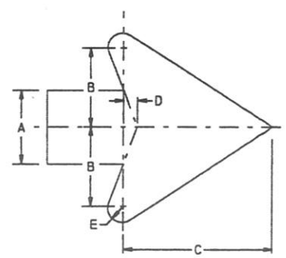

A = 400 (16")
B = 1.150 A = 460 (18.4")
C = 2.030 A = 812 (32.5")
D = 0.155 A = 62 (2.5")
E = 0.200 A = 80 (3.2")

ARROWHEAD DETAIL

COMMONWEALTH OF PENNSYLVANIA
DEPARTMENT OF TRANSPORTATION
BUREAU OF HIGHWAY SAFETY AND TRAFFIC ENGINEERING

SIGN DETAILS
FREEWAY AND EXPRESSWAY
GUIDE SIGNS

DIAGRAMMATIC SIGNS

RECOMMENDED MAR. 18, 2008	RECOMMENDED MAR. 18, 2008	SHT. 4 OF 9
CHIEF, TRAFFIC ENGINEERING AND OPERATIONS DIVISION	ACTING DIR. BUR. OF HIGHWAY SAFETY AND TRAFFIC ENGINEERING	TC-8701D

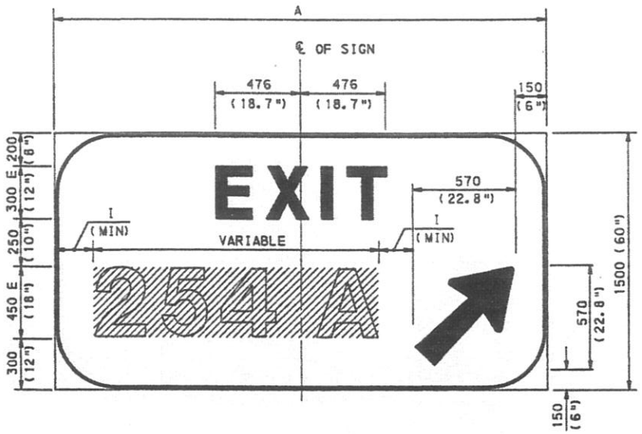

METRIC UNITS			
NUMBER OF		DIMENSIONS (mm)	
DIGITS	LETTERS	A	I (MIN)
1	0	1800	329
2	0	2100	243
1	1*	2400	288
3	0	2400	158
2	1*	2700	202
3	1*	3000	117

ENGLISH UNITS			
NUMBER OF		DIMENSIONS (INCHES)	
DIGITS	LETTERS	A	I (MIN)
1	0	72	13.3
2	0	84	10
1	1*	96	11.8
3	0	96	6.7
2	1*	108	8.5
3	1*	120	5.2

*USE 225 mm (9") FOR DIGIT TO LETTER SPACING

TYPE I
(STANDARD)

BORDER: 35 (1.4")
CORNER RADII: 100 (4")

NUMBER OF		DIMENSIONS mm (INCHES)
DIGITS	LETTERS	A
1	0	900 (36)
2	0	900 (36)
1	1**	900 (36)
3	0	900 (36)
2	1**	1200 (48)
3	1**	1350 (54)

**USE 125 mm (5") FOR DIGIT TO LETTER SPACING

TYPE III
(SPECIAL CASE - USE ONLY WHEN LATERAL SPACING PROHIBITS THE USE OF TYPE II)

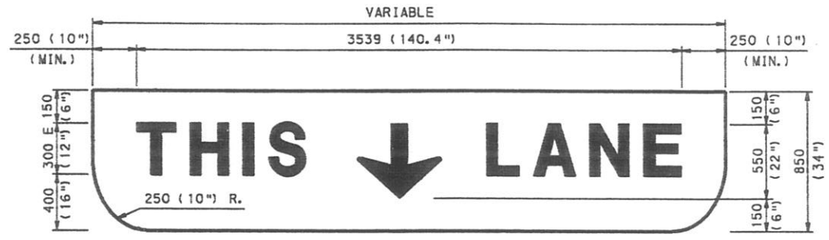

THIS LANE PANEL

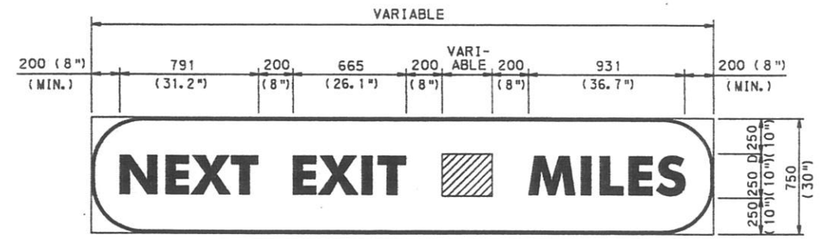

NEXT EXIT PANEL

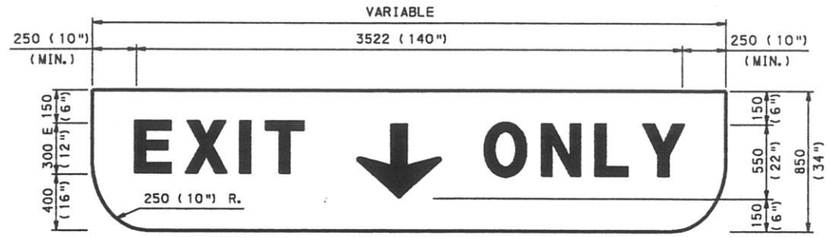

EXIT ONLY PANEL

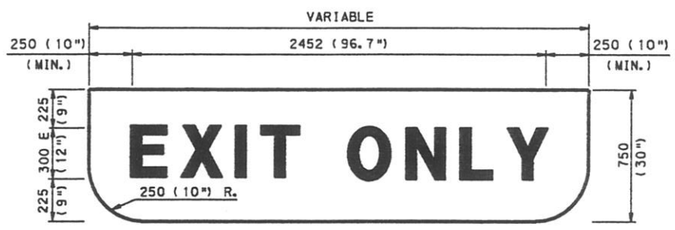

EXIT ONLY PANEL

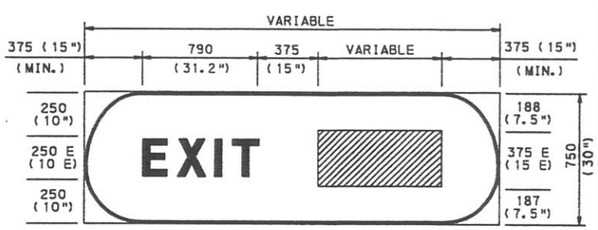

EXIT PANEL

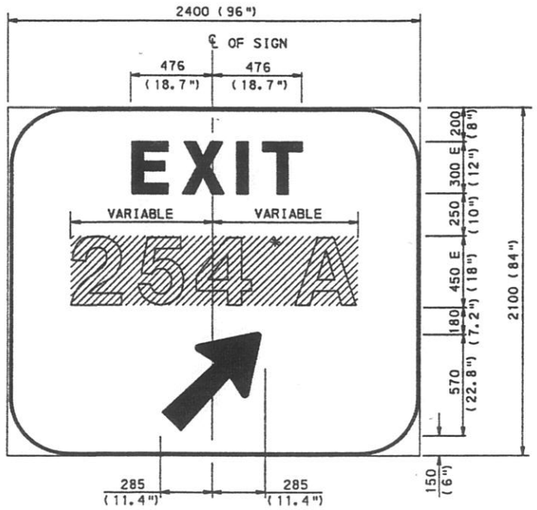

*USE 225 mm (9") FOR DIGIT TO LETTER SPACING

TYPE II
(SPECIAL CASE - USE ONLY WHEN LATERAL SPACING PROHIBITS THE USE OF TYPE I)

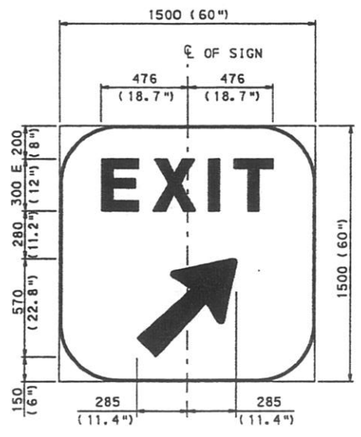

TYPE IV
(USE FOR UNNUMBERED EXITS ONLY)

GORE SIGNS

NOTES:

1. EXIT ONLY AND THIS LANE PANELS SHALL HAVE A YELLOW REFLECTORIZED BACKGROUND AND BLACK NONREFLECTORIZED LEGEND.
2. REFER TO TC-8700C FOR ARROW DETAILS. TYPE N ARROW SHALL BE USED ON THE GORE SIGNS, AND TYPE C ARROW SHALL BE USED ON THE EXIT ONLY AND THIS LANE PANELS.
3. ALL DIMENSIONS ARE IN MILLIMETERS UNLESS OTHERWISE NOTED. ENGLISH UNITS IN PARENTHESIS ( ).
4. EITHER ALL METRIC OR ALL ENGLISH UNITS MUST BE USED ON PLANS. METRIC AND ENGLISH UNITS SHOWN MAY NOT BE MIXED.

COMMONWEALTH OF PENNSYLVANIA
DEPARTMENT OF TRANSPORTATION
BUREAU OF HIGHWAY SAFETY AND TRAFFIC ENGINEERING

SIGN DETAILS
FREEWAY AND EXPRESSWAY GUIDE SIGNS

GORE SIGNS, EXIT PANELS & NEXT EXIT SIGNS

RECOMMENDED MAR. 18, 2008	RECOMMENDED MAR. 18, 2008	SHT. 5 OF 9
Allen C Rowe	Daryl R McCle	
CHIEF, TRAFFIC ENGINEERING AND OPERATIONS DIVISION	ACTING DIR. BUR. OF HIGHWAY SAFETY AND TRAFFIC ENGINEERING	TC-8701D

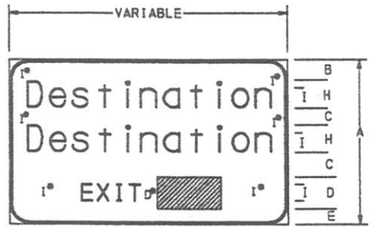

METRIC UNITS

TYPE FACILITY	DESTINATION LINES	DIMENSIONS (MILLIMETERS)						
		A	B	C	D	E	H	I
EXPRESSWAY	1	1200	205	225	300	205	265	200
	2	1800	235	250	300	235	265	200
FREEWAY	1	1500	260	275	375	260	330	250
	2	2100	260	275	375	255	330	250

ENGLISH UNITS

TYPE FACILITY	DESTINATION LINES	DIMENSIONS (INCHES)						
		A	B	C	D	E	H	I
EXPRESSWAY	1	48	8.2	9	12	8.2	10.6	8
	2	72	9.4	10	12	9.4	10.6	8
FREEWAY	1	60	10.4	11	15	10.3	13.3	10
	2	84	10.2	11	15	10.2	13.3	10

SINGLE EXIT SUPPLEMENTAL GUIDE SIGN

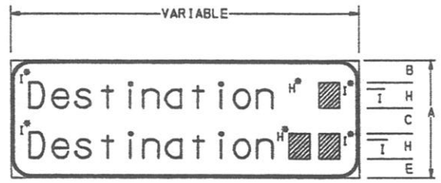

METRIC UNITS

TYPE FACILITY	DESTINATION LINES	DIMENSIONS (MILLIMETERS)						
		A	B	C	E	H	I	
EXPRESSWAY	2	1200	275	250	275	200	150	
	3	1500	250	200	250	200	150	
FREEWAY	2	1350	275	270	275	265	200	
	3	1800	245	255	250	265	200	

ENGLISH UNITS

TYPE FACILITY	DESTINATION LINES	DIMENSIONS (INCHES)					
		A	B	C	E	H	I
EXPRESSWAY	2	48	11	10	11	8	6
	3	60	10	8	10	8	6
FREEWAY	2	54	11	10.8	11	10.6	8
	3	72	10.1	10	10.1	10.6	8

POST INTERCHANGE DISTANCE SIGN

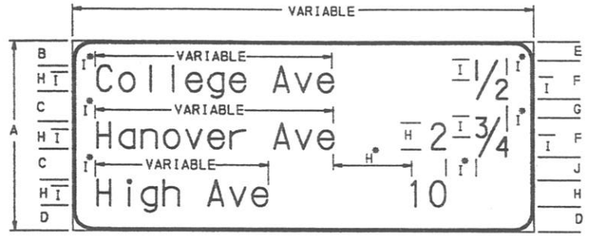

METRIC UNITS

TYPE FACILITY	DESTINATION LINES	DIMENSIONS (MILLIMETERS)									
		A	B	C	D	E	F	G	H	I	J
EXPRESSWAY	2	1350	285	250	285	270	300		265	200	230
	3	1800	250	250	255	235	300	215	265	200	230
FREEWAY	2	1500	285	275	280	265	375		330	250	250
	3	2100	280	275	280	260	375	230	330	250	250

ENGLISH UNITS

TYPE FACILITY	DESTINATION LINES	DIMENSIONS (INCHES)									
		A	B	C	D	E	F	G	H	I	J
EXPRESSWAY	2	54	11.4	10	11.4	10.7	12		10.6	8	9.3
	3	72	10.1	10	10.1	9.4	12	8.6	10.6	8	9.3
FREEWAY	2	60	11.2	11	11.2	10.4	15		13.3	10	10.1
	3	84	11	11	11.1	10.2	15	9.2	13.3	10	10.2

INTERCHANGE SEQUENCE SIGN

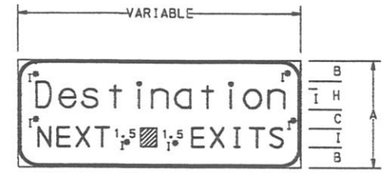

METRIC UNITS

TYPE FACILITY	DIMENSIONS (MILLIMETERS)				
	A	B	C	H	I
EXPRESSWAY	1200	245	245	265	200
FREEWAY	1350	260	250	330	250

ENGLISH UNITS

TYPE FACILITY	DIMENSIONS (INCHES)				
	A	B	C	H	I
EXPRESSWAY	48	9.8	9.8	10.6	8
FREEWAY	54	10.3	10.1	13.3	10

NEXT (NUMBER) EXITS AREA SIGN

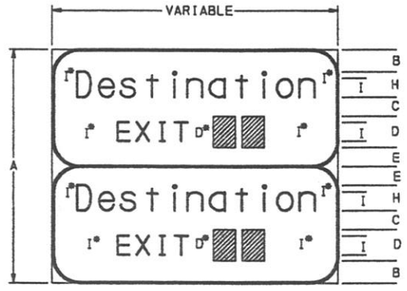

METRIC UNITS

TYPE FACILITY	DIMENSIONS (MILLIMETERS)						
	A	B	C	D	E	H	I
EXPRESSWAY	2400	220	200	300	215	265	200
FREEWAY	3000	275	250	375	270	330	250

ENGLISH UNITS

TYPE FACILITY	DIMENSIONS (INCHES)						
	A	B	C	D	E	H	I
EXPRESSWAY	96	8.8	8	12	8.6	10.6	8
FREEWAY	120	10.9	10	15	10.8	13.3	10

DOUBLE EXIT SUPPLEMENTAL GUIDE SIGN

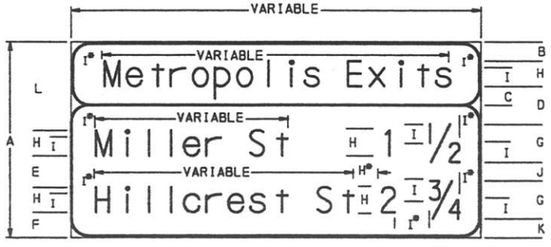

METRIC UNITS

TYPE FACILITY	DESTINATION LINES	DIMENSIONS (MILLIMETERS)											
		A	B	C	D	E	F	G	H	I	J	K	L
EXPRESSWAY	2	1950	255	205	400	235	250	300	265	200	200	230	935
	3	2400	255	205	400	210	250	300	265	200	175	230	935
FREEWAY	2	2400	310	260	500	295	285	375	330	250	250	260	1160
	3	3000	285	260	500	295	285	375	330	250	250	260	1135

ENGLISH UNITS

TYPE FACILITY	DESTINATION LINES	DIMENSIONS (INCHES)											
		A	B	C	D	E	F	G	H	I	J	K	L
EXPRESSWAY	2	78	10.2	8.2	16	9.4	10	12	10.6	8	8	9.2	37.4
	3	96	10.2	8.2	16	8.4	10	12	10.6	8	7	9.2	37.4
FREEWAY	2	96	12.3	10.4	20	11.7	11.3	15	13.3	10	10	10.4	46.4
	3	120	11.3	10.4	20	11.7	11.3	15	13.3	10	10	10.4	45.4

COMMUNITY INTERCHANGES IDENTIFICATION SIGN

* INDICATES MINIMUM SPACING.

NOTES:

1. SEE TC-8700C, SHEET 1 FOR LAYOUT OF FRACTIONS.
2. EITHER ALL METRIC OR ALL ENGLISH UNITS MUST BE USED ON PLANS. METRIC AND ENGLISH UNITS SHOWN MAY NOT BE MIXED.

COMMONWEALTH OF PENNSYLVANIA
DEPARTMENT OF TRANSPORTATION
BUREAU OF HIGHWAY SAFETY AND TRAFFIC ENGINEERING

SIGN DETAILS FREEWAY AND EXPRESSWAY GUIDE SIGNS

SUPPLEMENTAL GUIDE SIGNS & MISCELLANEOUS INTERCHANGE SIGNS

RECOMMENDED MAR. 18, 2008
CHIEF, TRAFFIC ENGINEERING AND OPERATIONS DIVISION

RECOMMENDED MAR. 18, 2008
ACTING DIR. BUR. OF HIGHWAY SAFETY AND TRAFFIC ENGINEERING

SHT. 6 OF 9

TC-8701D

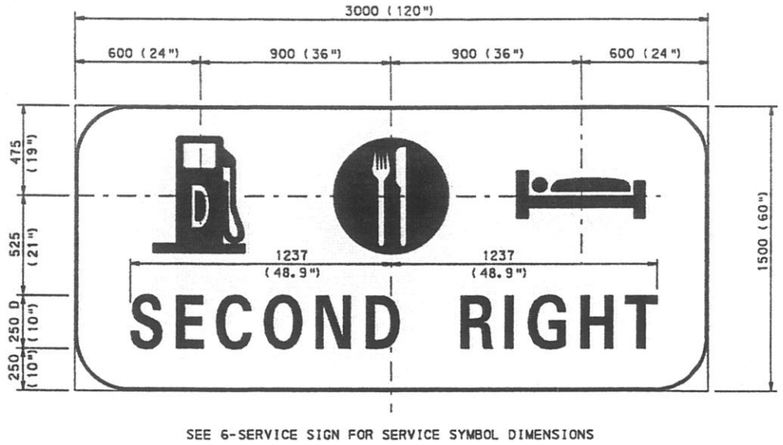

SEE 6-SERVICE SIGN FOR SERVICE SYMBOL DIMENSIONS

3-SERVICE SIGN

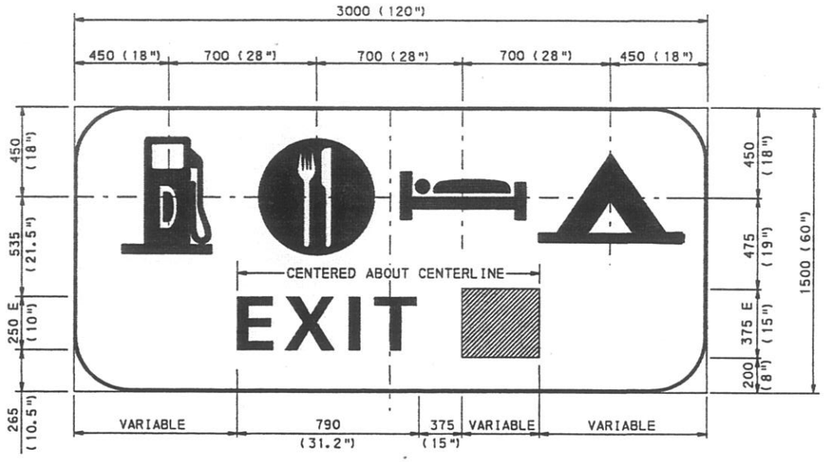

SEE 6-SERVICE SIGN FOR SERVICE SYMBOL DIMENSIONS

4-SERVICE SIGN

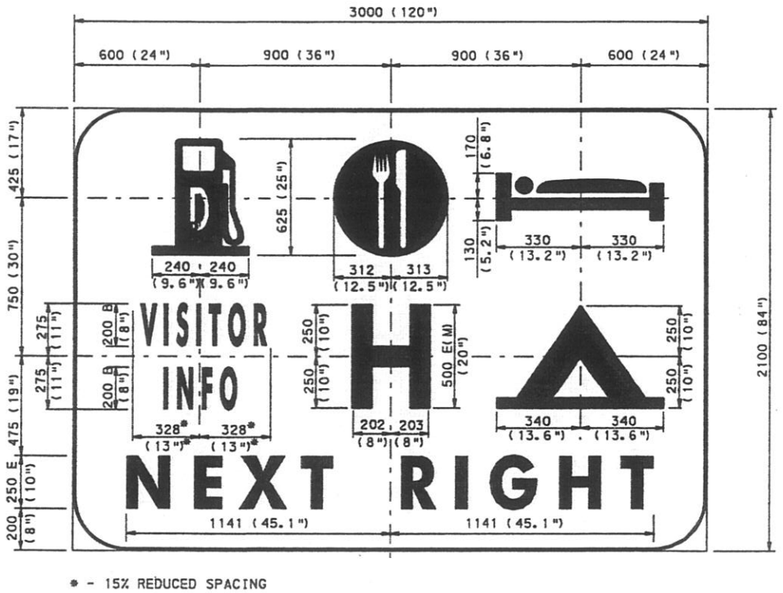

* - 15% REDUCED SPACING

6-SERVICE SIGN

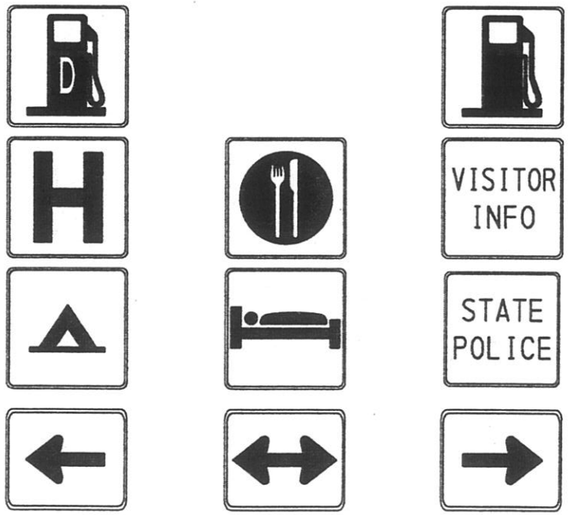

RAMP SIGNING

NOTES:

1. ALL SERVICE SIGNS SHALL HAVE A BLUE REFLECTORIZED BACKGROUND AND WHITE REFLECTORIZED SYMBOLS, LEGENDS, AND BORDERS. UNLESS NOTED OTHERWISE, THE TYPE OF REFLECTIVE SHEETING SHALL COMPLY WITH DEPARTMENT PUBLICATION 408.
2. ALL MAINLINE SERVICE SIGNS SHALL HAVE A 50 mm (2") BORDER WITH 225 mm (9") CORNER RADII.
3. THE STANDARD MAINLINE SERVICE SIGN SHALL USE A 3000 mm x 1500 mm (120" x 60") PANEL AND SHALL USE THE THREE-SYMBOL LAYOUT. IF FOUR SYMBOLS ARE REQUIRED, THE SYMBOLS SHALL BE AS INDICATED. IF MORE THAN FOUR SYMBOLS ARE REQUIRED, A 3000 mm x 2100 mm (120" x 84") PANEL SHALL BE USED.
4. WHEN THE EXIT IS NUMBERED, THE EXIT NUMBER SHOULD BE USED INSTEAD OF "NEXT RIGHT" OR "SECOND RIGHT".
5. FOR THE LAYOUT OF RAMP SIGNING [600 mm x 600 mm (24" x 24")], SEE D9 SERIES IN DEPARTMENT PUBLICATION 236M. USE 600 mm x 300 mm (24" x 12") SERVICES ARROW (D9-2-2) WITH RAMP SIGNING.
6. NORMAL SEQUENCE SHOULD BE GAS (DIESEL), FOOD, LODGING, AND THEN OTHERS.
7. ALL DIMENSIONS ARE IN MILLIMETERS UNLESS OTHERWISE NOTED. ENGLISH UNITS IN PARENTHESIS ( ).
8. EITHER ALL METRIC OR ALL ENGLISH UNITS MUST BE USED ON PLANS. METRIC AND ENGLISH UNITS SHOWN MAY NOT BE MIXED.

COMMONWEALTH OF PENNSYLVANIA
DEPARTMENT OF TRANSPORTATION
BUREAU OF HIGHWAY SAFETY AND TRAFFIC ENGINEERING

SIGN DETAILS
FREEWAY AND EXPRESSWAY GUIDE SIGNS

GENERAL MOTORIST SERVICE SIGNS

RECOMMENDED MAR. 18, 2008 CHIEF, TRAFFIC ENGINEERING AND OPERATIONS DIVISION	RECOMMENDED MAR. 18, 2008 ACTING DIR. BUR. OF HIGHWAY SAFETY AND TRAFFIC ENGINEERING	SHT. 7 OF 9 TC-8701D

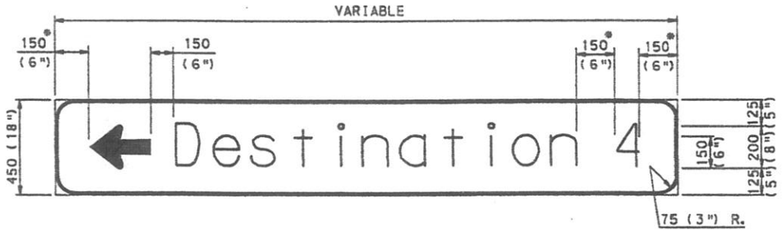

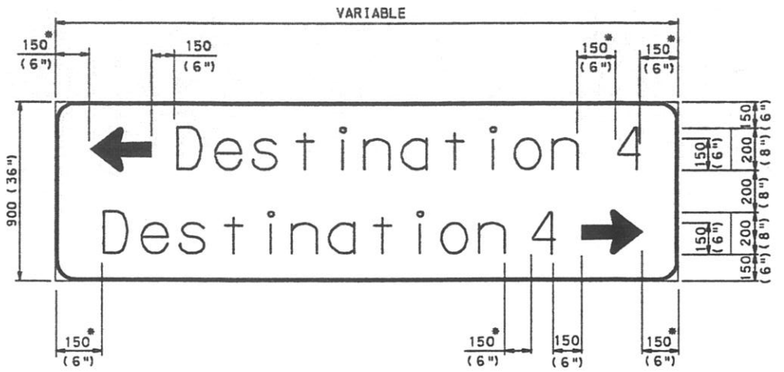

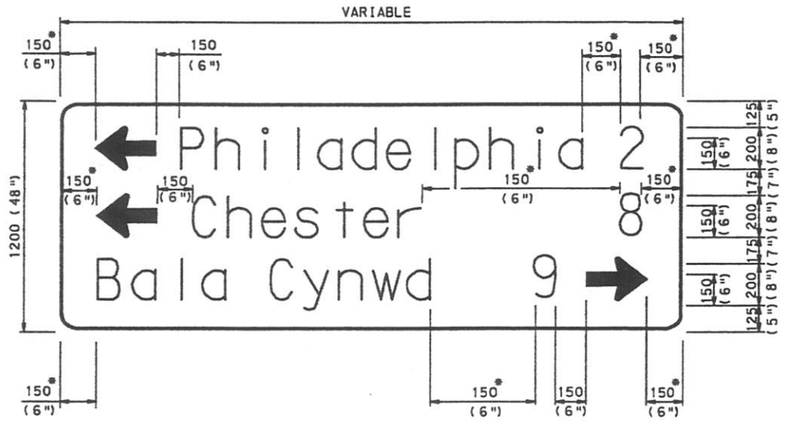

RAMP DESTINATION SIGNS

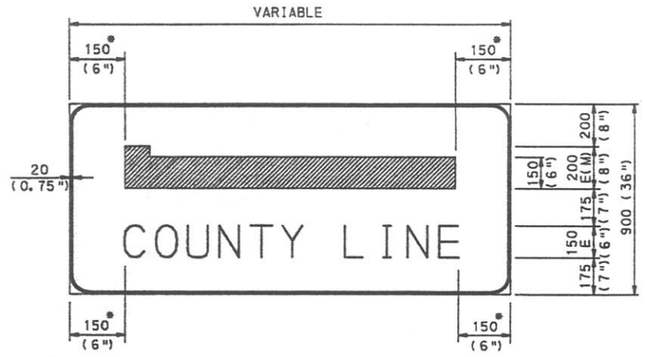

COUNTY BOUNDARY SIGNS

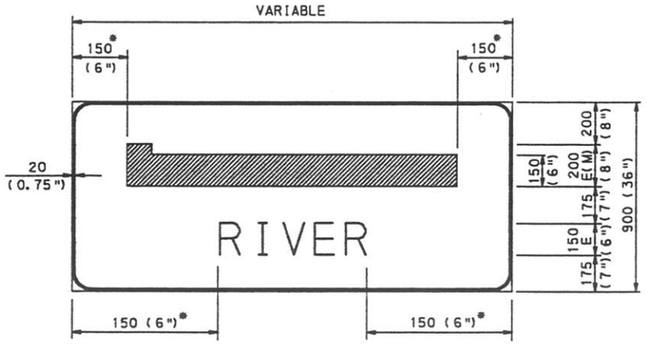

WATERWAY SIGNS

* INDICATES MINIMUM SPACING

NOTES:

1. ALL SIGNS ON THIS SHEET SHALL HAVE A 30 mm (1.25") BORDER WITH 150 mm (6") CORNER RADII, UNLESS OTHERWISE NOTED.
2. REFER TO TC-8700C FOR ARROW DETAILS. TYPE K, TYPE L OR TYPE M ARROWS SHALL BE USED FOR THE RAMP DESTINATION SIGNS.
3. BOUNDARY AND WATERWAY SIGNS SHALL HAVE WHITE REFLECTORIZED BACKGROUND AND BLUE REFLECTORIZED LEGEND AND BORDER. UNLESS NOTED OTHERWISE, THE TYPE OF REFLECTIVE SHEETING SHALL COMPLY WITH DEPARTMENT PUBLICATION 408.
4. ALL DIMENSIONS ARE IN MILLIMETERS UNLESS OTHERWISE NOTED. ENGLISH UNITS IN PARENTHESIS ( ).
5. EITHER ALL METRIC OR ALL ENGLISH UNITS MUST BE USED ON PLANS. METRIC AND ENGLISH UNITS SHOWN MAY NOT BE MIXED.

COMMONWEALTH OF PENNSYLVANIA
DEPARTMENT OF TRANSPORTATION
BUREAU OF HIGHWAY SAFETY AND TRAFFIC ENGINEERING

SIGN DETAILS
FREEWAY AND EXPRESSWAY GUIDE SIGNS

RAMP DESTINATION AND BOUNDARY SIGNS

RECOMMENDED MAR. 18, 2008 Allen C Rowe CHIEF, TRAFFIC ENGINEERING AND OPERATIONS DIVISION	RECOMMENDED MAR. 18, 2008 Daryl R Dilts ACTING DIR. BUR. OF HIGHWAY SAFETY AND TRAFFIC ENGINEERING	SHT. 8 OF 9 TC-8701D

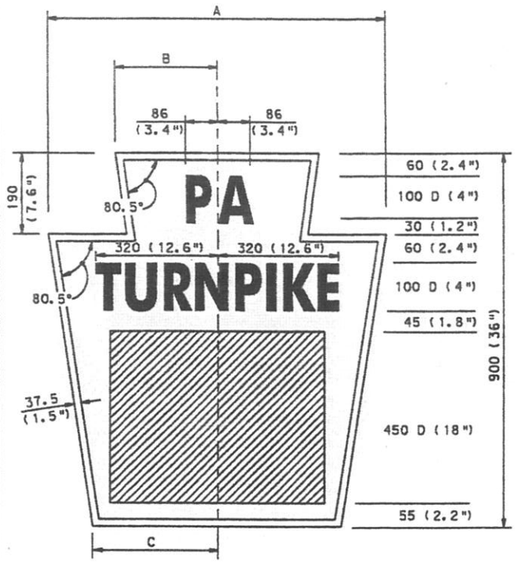

COLOR: GREEN REFLECTORIZED BACKGROUND
WHITE REFLECTORIZED LEGEND AND BORDER

METRIC UNITS				ENGLISH UNITS			
NUMBER OF DIGITS	DIMENSIONS (mm)			NUMBER OF DIGITS	DIMENSIONS (")		
	A	B	C		A	B	C
1 or 2	900	260	330	1 or 2	36	10.5	13.3
3	1125	375	445	3	45	15	17.8

PA. TURNPIKE ROUTE SHIELD

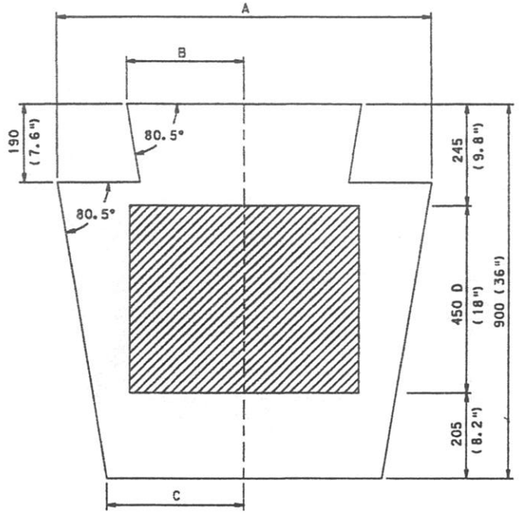

COLOR: WHITE REFLECTORIZED BACKGROUND
BLACK NONREFLECTORIZED LEGEND

METRIC UNITS				ENGLISH UNITS			
NUMBER OF DIGITS	DIMENSIONS (mm)			NUMBER OF DIGITS	DIMENSIONS (")		
	A	B	C		A	B	C
1 or 2	900	260	330	1 or 2	36	10.5	13.3
3	1125	375	445	3	45	15	17.8

PA. SHIELD

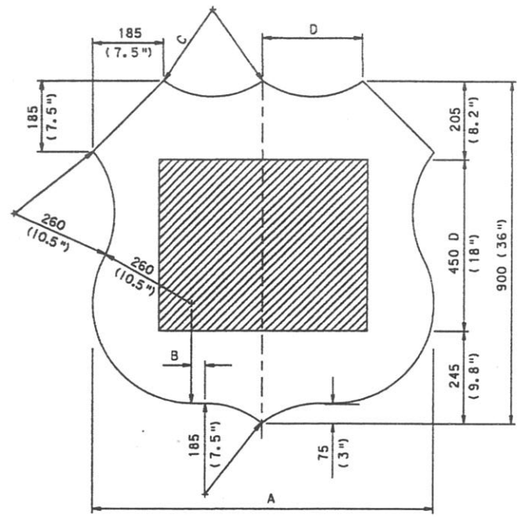

COLOR: WHITE REFLECTORIZED BACKGROUND
BLACK NONREFLECTORIZED LEGEND

METRIC UNITS					ENGLISH UNITS				
NUMBER OF DIGITS	DIMENSIONS (mm)				NUMBER OF DIGITS	DIMENSIONS (")			
	A	B	C	D		A	B	C	D
1 or 2	900	35	185	260	1 or 2	36	1.5	7.5	10.5
3	1125	135	335	375	3	45	5.5	13.5	15

U.S. SHIELD

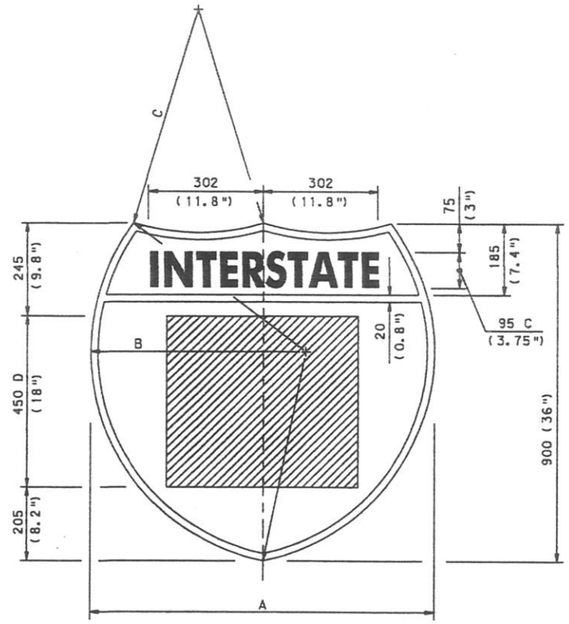

COLOR: WHITE REFLECTORIZED LEGEND AND BORDER
RED REFLECTORIZED TOP BACKGROUND
BLUE REFLECTORIZED BOTTOM BACKGROUND

METRIC UNITS				ENGLISH UNITS			
NUMBER OF DIGITS	DIMENSIONS (mm)			NUMBER OF DIGITS	DIMENSIONS (")		
	A	B	C		A	B	C
1 or 2	900	571	571	1 or 2	36	22.5	22.5
3	1125	647	914	3	45	25.5	36

INTERSTATE SHIELD

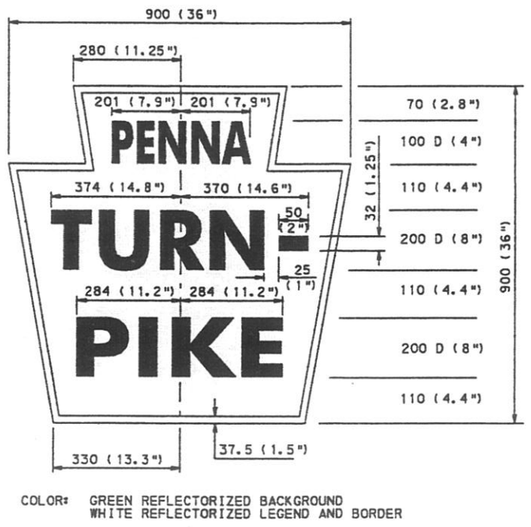

COLOR: GREEN REFLECTORIZED BACKGROUND
WHITE REFLECTORIZED LEGEND AND BORDER

PENNA. TURNPIKE SHIELD

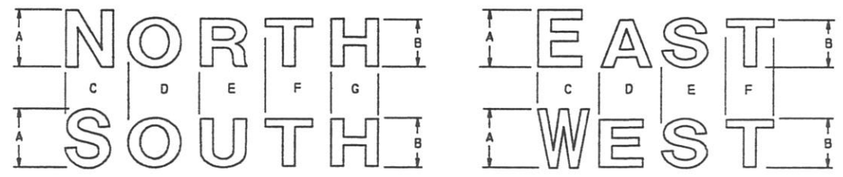

SERIES E CAPITAL

METRIC UNITS								
	A	B	C	D	E	F	G	TOTAL
NORTH	450	375	472	413	383	358	304	1930
	375	300	392	330	306	287	243	1558
	300	250	315	276	254	238	202	1285
SOUTH	450	375	452	413	383	358	304	1910
	375	300	375	330	306	287	243	1541
	300	250	301	276	254	238	202	1271
EAST	450	375	393	460	383	279		1515
	375	300	326	368	306	224		1224
	300	250	263	306	254	186		1009
WEST	450	375	566	358	383	279		1586
	375	300	470	287	306	224		1287
	300	250	377	238	254	186		1055

ENGLISH UNITS								
	A	B	C	D	E	F	G	TOTAL
NORTH	18	15	18.6	16.3	15.0	14.1	12.0	76.0
	15	12	15.4	13.0	12.0	11.3	9.6	61.3
	12	10	12.4	10.9	10.0	9.4	8.0	50.7
SOUTH	18	15	17.7	16.3	15.0	14.1	12.0	75.1
	15	12	14.7	13.0	12.0	11.3	9.6	60.6
	12	10	11.8	10.9	10.0	9.4	8.0	50.1
EAST	18	15	15.5	18.1	15.0	11.0		59.6
	15	12	12.9	14.5	12.0	8.8		48.2
	12	10	10.3	12.1	10.0	7.3		39.7
WEST	18	15	22.2	14.1	15.0	11.0		62.3
	15	12	18.5	11.3	12.0	8.8		50.6
	12	10	14.8	9.4	10.0	7.3		41.5

CARDINAL DETAILS

NOTES:

1. THESE IRREGULAR-SHAPED SHIELDS SHALL BE FABRICATED FROM TYPE III OR IV REFLECTIVE SHEETING AND SHALL BE USED ON ALL GUIDE SIGNS IN LIEU OF THOSE SHIELDS DEPICTED IN PUBLICATION 236M.
2. THE PA TURNPIKE ROUTE SHIELD SHALL ONLY BE USED WITH PA NUMBERED TRAFFIC ROUTES, i.e., NOT WITH INTERSTATE ROUTES SUCH AS I-76, I-276, I-476, ETC.
3. ALL DIMENSIONS ARE IN MILLIMETERS UNLESS OTHERWISE NOTED. ENGLISH UNITS IN PARENTHESIS ( ).
4. EITHER ALL METRIC OR ALL ENGLISH UNITS MUST BE USED ON PLANS. METRIC AND ENGLISH UNITS SHOWN MAY NOT BE MIXED.

COMMONWEALTH OF PENNSYLVANIA
DEPARTMENT OF TRANSPORTATION
BUREAU OF HIGHWAY SAFETY AND TRAFFIC ENGINEERING

SIGN DETAILS
FREEWAY AND EXPRESSWAY GUIDE SIGNS

CARDINALS AND SHIELDS

RECOMMENDED MAR. 18, 2008	RECOMMENDED MAR. 18, 2008	SHT. 9 OF 9
Alan C Rowe	Daniel R Stephens	
CHIEF, TRAFFIC ENGINEERING AND OPERATIONS DIVISION	ACTING DIR. BUR. OF HIGHWAY SAFETY AND TRAFFIC ENGINEERING	TC-8701D

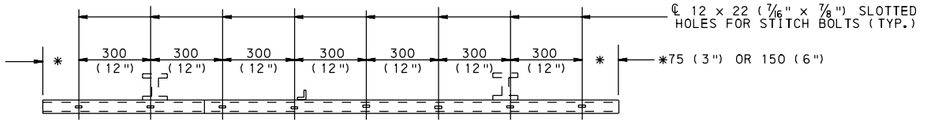

PLAN

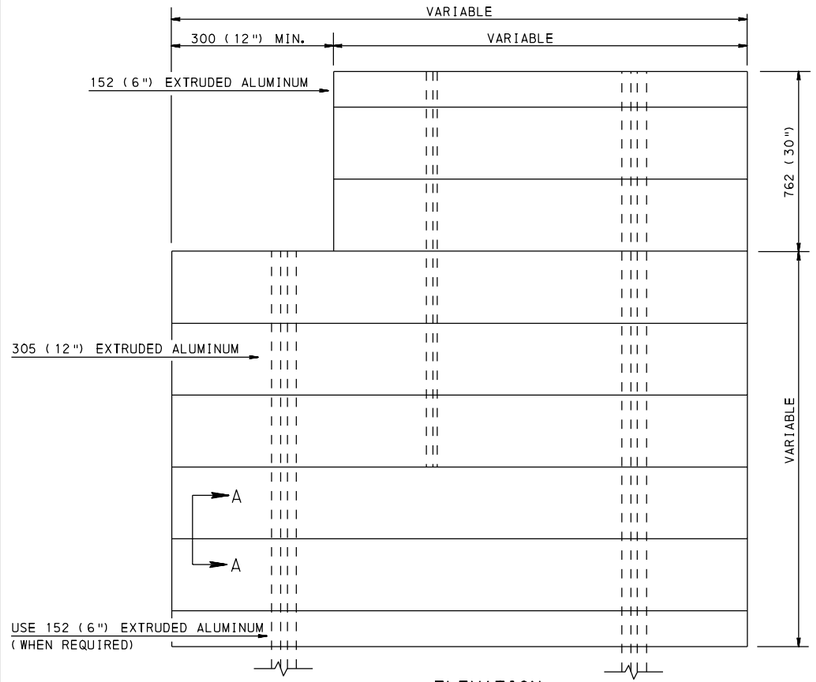

ELEVATION

END VIEW

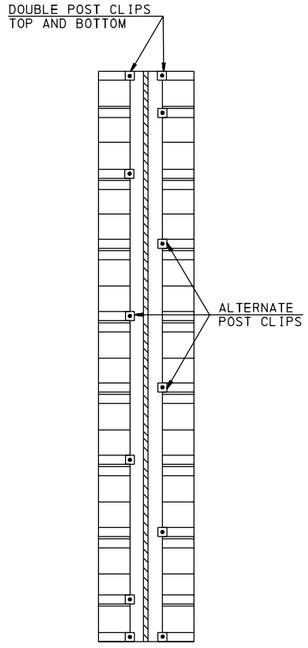

REAR VIEW
(POST - MOUNTED)

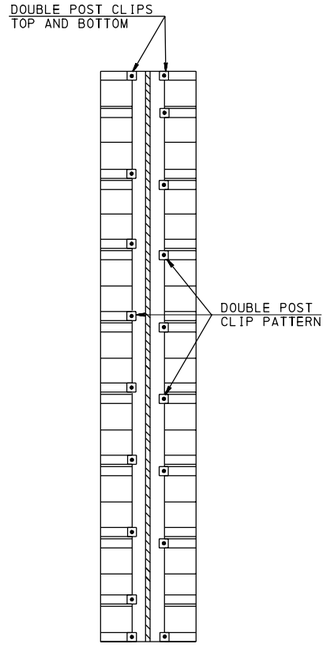

REAR VIEW
(OVERHEAD)

EXTRUDED ALUMINUM CHANNEL SIGN

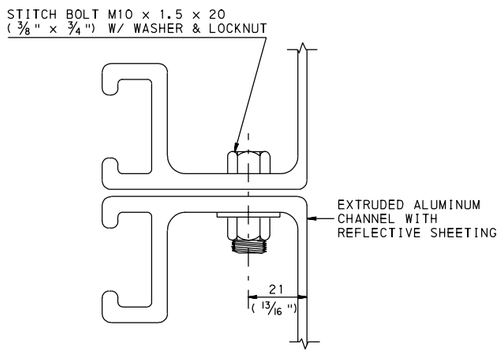

SECTION A-A

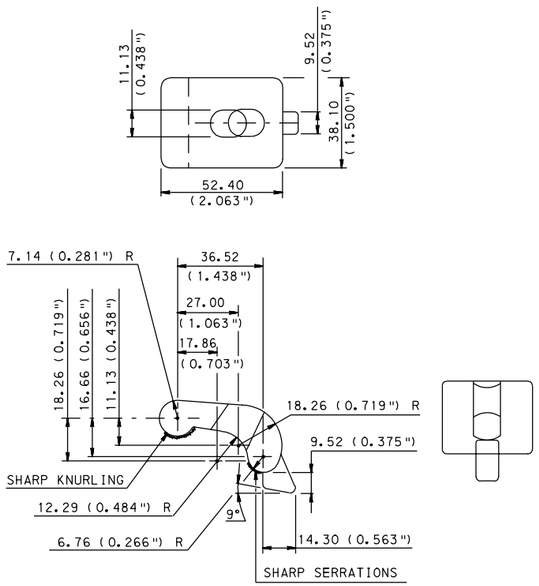

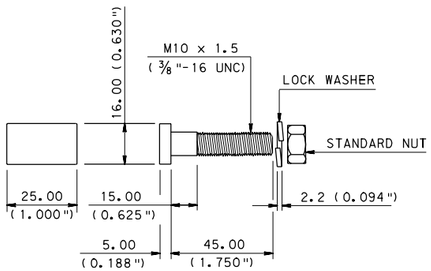

POST CLIP AND BOLT
(SEE NOTE 4)

NOTES:

1. IF A 152 (6") SECTION IS REQUIRED, IT SHOULD BE PLACED AT THE TOP AND/OR THE BOTTOM OF THE SIGN.
2. STITCH BOLTS TO BE USED AT 300 (12") CENTERS THROUGHOUT THE SIGN PANEL.
3. A DOUBLE POST CLIP PATTERN IS REQUIRED FOR ALL OVERHEAD SIGNS.
4. A LOCK NUT AND M10 (3/8") WASHER MAY BE USED IN LIEU OF LOCK WASHER AND STANDARD NUT FOR POST CLIPS.
5. SEE TC-8702E FOR INSTALLATION ON WOOD POSTS.
6. ALL DIMENSIONS ARE IN MILLIMETERS UNLESS OTHERWISE NOTED. ENGLISH UNITS IN PARENTHESIS ( ).
7. EITHER ALL METRIC OR ALL ENGLISH UNITS MUST BE USED ON PLANS. METRIC AND ENGLISH UNITS SHOWN MAY NOT BE MIXED.

COMMONWEALTH OF PENNSYLVANIA
DEPARTMENT OF TRANSPORTATION
BUREAU OF HIGHWAY SAFETY AND TRAFFIC ENGINEERING

EXTRUDED ALUMINUM CHANNEL SIGN

RECOMMENDED MAY 25, 2007
Glenn C. Rowe
CHIEF, TRAFFIC ENGINEERING AND OPERATIONS DIVISION

RECOMMENDED MAY 25, 2007
M. L. Patel
CHIEF HIGHWAY ENGINEER

SHT. 1 OF 2

TC-8701E

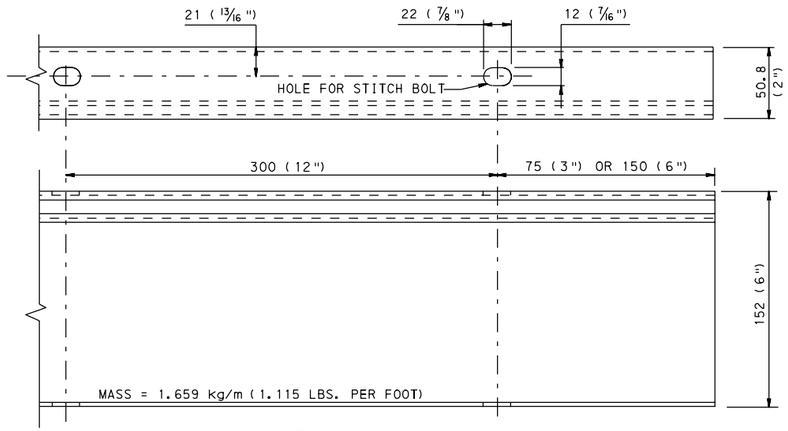

152 (6") EXTRUDED ALUMINUM CHANNEL

REAR VIEW

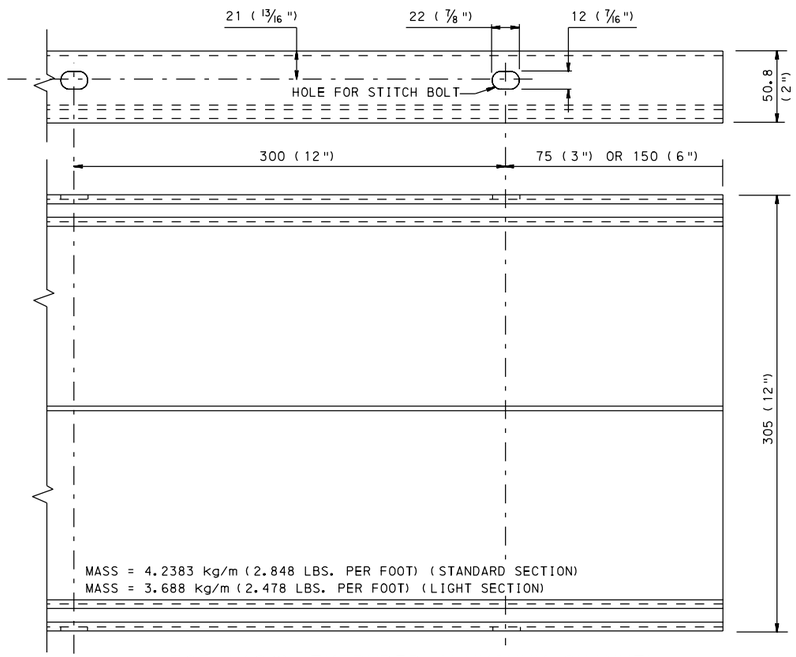

305 (12") EXTRUDED ALUMINUM CHANNEL

REAR VIEW

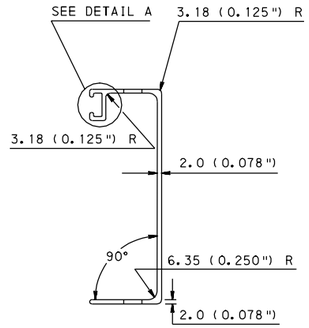

END VIEW

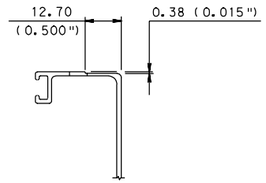

APPROVED ALTERNATE
CORNER DETAIL

DIMENSIONS NOT SHOWN ARE
SAME AS END VIEW

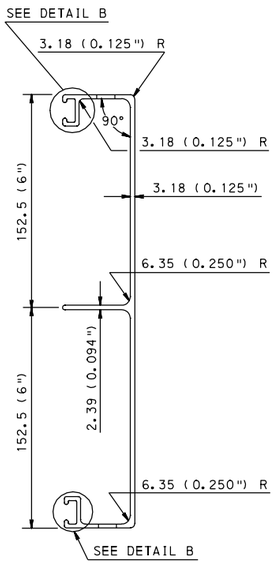

END VIEW

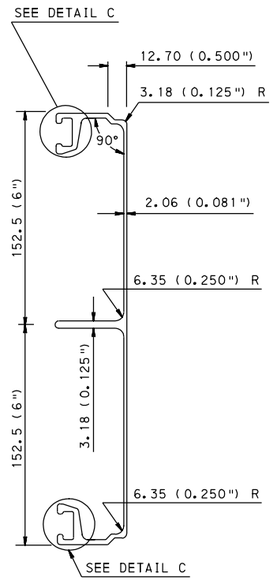

END VIEW
LIGHT SECTION

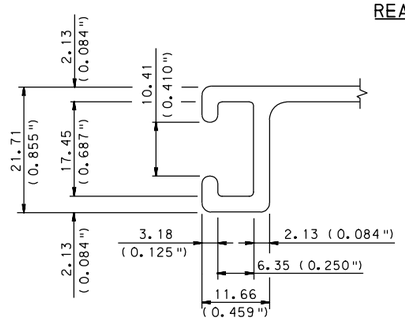

DETAIL A

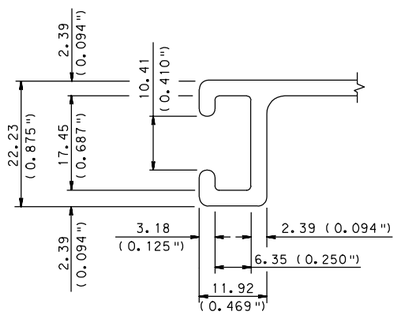

DETAIL B

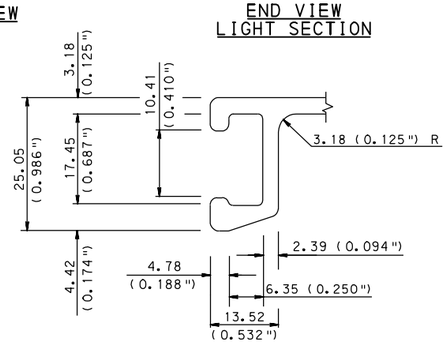

DETAIL C

NOTES:

1. USE EITHER THE STANDARD SECTION (28008) OR THE LIGHT SECTION (401771).
2. FOR DETAILS A, B, AND C USE 1.6 (0.062") R ON ALL OUTSIDE CORNERS AND 0.8 (0.031") R ON ALL INSIDE CORNERS UNLESS OTHERWISE SPECIFIED.
3. ALL DIMENSIONS ARE IN MILLIMETERS UNLESS OTHERWISE NOTED. ENGLISH UNITS IN PARENTHESIS ( ).
4. EITHER ALL METRIC OR ALL ENGLISH UNITS MUST BE USED ON PLANS. METRIC AND ENGLISH UNITS SHOWN MAY NOT BE MIXED.

COMMONWEALTH OF PENNSYLVANIA
DEPARTMENT OF TRANSPORTATION
BUREAU OF HIGHWAY SAFETY AND TRAFFIC ENGINEERING

EXTRUDED ALUMINUM CHANNEL SIGN

RECOMMENDED MAY 25, 2007
Glenn C. Rowe
CHIEF, TRAFFIC ENGINEERING AND OPERATIONS DIVISION

RECOMMENDED MAY 25, 2007
M. L. Patel
CHIEF HIGHWAY ENGINEER

SHT. 2 OF 2

TC-8701E

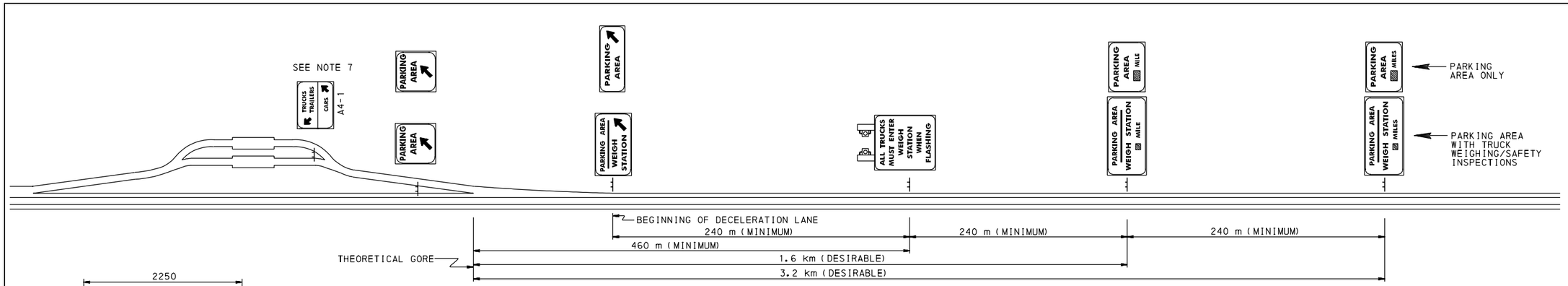

TYPE N ARROW

267	592	840
262--P	312--A	570--ARROW
312--A	276--R	840
276--R	224--E	2250
267--K	255--A	
119--I	591	
276--N	2250	
205--G		
266		
2250		

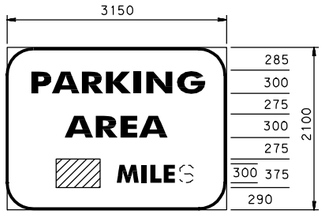

717	1042	--		--
262--P	312--A	450		450
312--A	276--R	307--M		307--M
276--R	224--E	119--I	OR	119--I
267--K	255--A	243--L		243--L
119--I	1041	186--E		243--E
276--N	3150			205--S
205--G				
716				
3150				

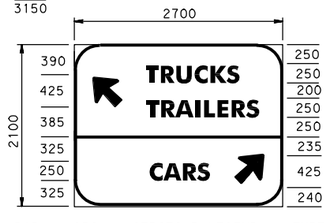

50 mm BAR 250 mm SERIES D LEGEND TYPE B ARROWS

224	224	899
425--ARROW	425--ARROW	203--C
250	250	260--A
203--T	203--T	219--R
230--R	219--R	171--S
230--U	260--A	299
219--C	99--I	425--ARROW
223--K	203--L	224
171--S	203--E	2700
525	219--R	
2700	171--S	
	224	
	2700	

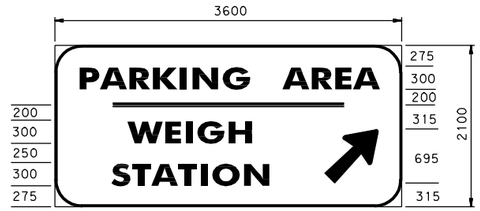

50 mm BAR TYPE G ARROW

258	550	719	506
262--P	2500--(BAR LENGTH)	324--W	262--S
312--A	550	243--E	205--T
276--R	3600	119--I	274--A
267--K		276--G	243--T
119--I		205--H	119--I
276--N		719	285--O
205--G		695--ARROW	205--N
300		300	506
312--A		3600	695--ARROW
276--R			300
224--E			3600
255--A			
258			
3600			

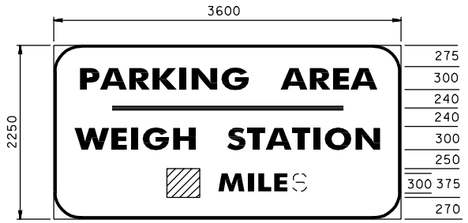

50 mm BAR

258	550	270	--	--	
262--P	2500--(BAR	324--W	450	450	
312--A	550 LENGTH)	243--E	307--M	307--M	
276--R	3600	119--I	119--I	OR	119--I
267--K		276--G	243--L		243--L
119--I		205--H	186--E		243--E
276--N		300			205--S
205--G		262--S			
300		205--T			
312--A		274--A			
276--R		243--T			
224--E		119--I			
255--A		285--O			
258		205--N			
3600		270			
		3600			

TYPE G ARROW

294	619
262--P	312--A
312--A	276--R
276--R	224--E
267--K	255--A
119--I	619
276--N	695--ARROW
205--G	300
294	3300
695--ARROW	
300	
3300	

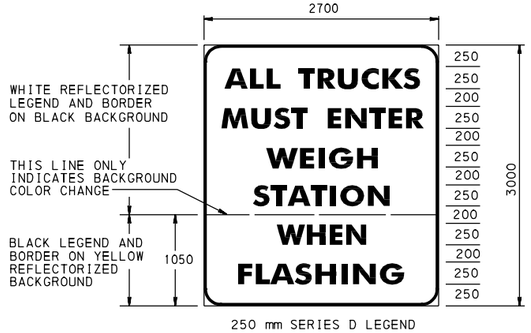

250 mm SERIES D LEGEND

278	296	864	686	913	553
260--A	255--M	270--W	219--S	270--W	203--F
203--L	230--U	203--E	171--T	230--H	171--L
155--L	219--S	99--I	228--A	203--E	260--A
250	155--T	230--G	203--T	171--N	230--S
203--T	250	171--H	99--I	913	230--H
230--R	203--E	863	238--O	2700	99--I
230--U	219--N	2700	171--N		230--N
219--C	203--T		685		171--G
223--K	203--E		2700		553
171--S	171--R				2700
278	296				
2700	2700				

A4-1

NOTES:

1. DEFINITION: PARKING AREAS DO NOT HAVE PERMANENT REST ROOM FACILITIES.
2. DISTANCE: USE DISTANCE FROM THEORETICAL GORE FOR DISTANCE INDICATED ON SIGNS.
3. COLOR: USE BLUE REFLECTORIZED BACKGROUND WITH WHITE REFLECTORIZED DIRECT APPLIED LEGEND AND BORDER, UNLESS OTHERWISE NOTED.
4. BORDERS: USE 50 mm WIDE BORDER WITH 300 mm CORNER RADII, UNLESS OTHERWISE NOTED.
5. LEGEND AND SIGN WIDTH: UNLESS OTHERWISE NOTED, USE 300 mm SERIES D UPPER CASE FOR LEGEND, AND 375 mm SERIES D FOR DIGITS. SEE TC-8700C FOR LAYOUTS OF ARROWS AND FRACTIONS, AND FOR DETERMINING SIGN WIDTHS.
6. POSTS: USE POSTS OF AN APPROVED BREAKAWAY DESIGN, EITHER STEEL (TC-8702A OR TC-8702B) OR WOOD (TC-8702E).
7. A4-1 SIGN: USE ONLY WHEN SEPARATE PARKING AREAS ARE PROVIDED.
8. MINIMUM SIGN SPACING: MAINTAIN 240 m MINMUM SPACING FOR ALL SIGNS PRIOR TO DECELERATION LANE.
9. ALL DIMENSIONS ARE IN MILLIMETERS UNLESS OTHERWISE NOTED.

METRIC UNITS

COMMONWEALTH OF PENNSYLVANIA
DEPARTMENT OF TRANSPORTATION
BUREAU OF HIGHWAY SAFETY AND TRAFFIC ENGINEERING

FREEWAY AND EXPRESSWAY ADVANCE SIGNING

PARKING AREAS

RECOMMENDED MAY 25, 2007
Glenn C Rowe
CHIEF, TRAFFIC ENGINEERING AND OPERATIONS DIVISION

RECOMMENDED MAY 25, 2007
M. C. Patel
CHIEF HIGHWAY ENGINEER

SHT. 1 OF 2

TC-8701P

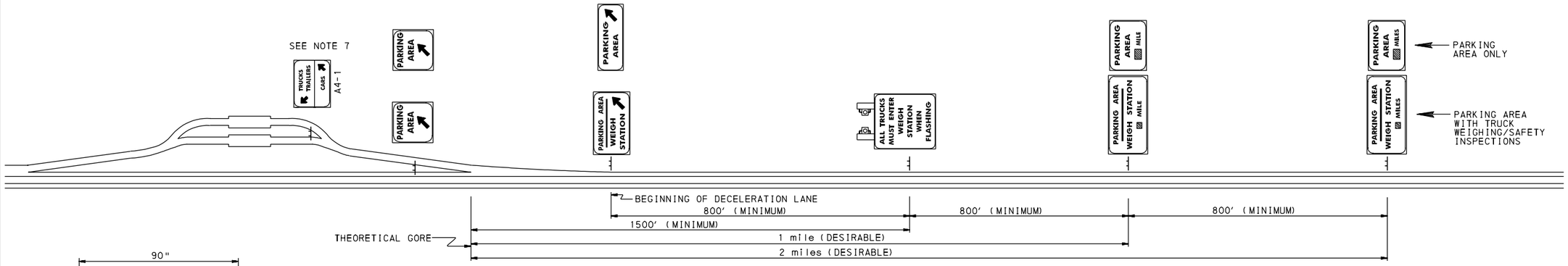

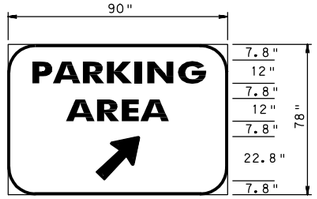

TYPE N ARROW

11.2	24.0	33.6
10.3--P	12.3--A	22.8--ARROW
12.3--A	10.9--R	33.6
10.9--R	8.8--E	90.0"
10.5--K	10.0--A	
4.7--I	24.0	
10.9--N	90.0"	
8.1--G		
11.1		
90.0"		

29.2	42.0	--		--	
10.3--P	12.3--A	18.0		18.0	
12.3--A	10.9--R	12.1--M		12.1--M	
10.9--R	8.8--E	4.7--I	OR	4.7--I	
10.5--K	10.0--A	9.6--L		9.6--L	
4.7--I	42.0	7.3--E		9.6--E	
10.9--N	126.0"			8.1--S	
8.1--G					
29.1					
126.0"					

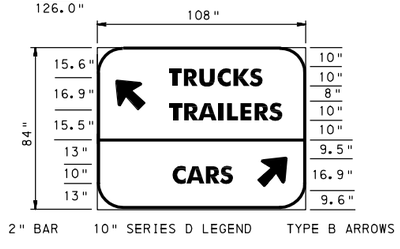

2" BAR 10" SERIES D LEGEND TYPE B ARROWS

9.6	9.6	36.5
16.9--ARROW	16.9--ARROW	8.0--C
10.0	10.0	10.2--A
8.0--T	8.0--T	8.6--R
9.1--R	8.6--R	6.7--S
9.1--U	10.2--A	11.5
8.6--C	3.9--I	16.9--ARROW
8.8--K	8.0--L	9.6
6.7--S	8.0--E	108.0"
21.2	8.6--R	
108.0"	6.7--S	
	9.5	
	108.0"	

A4-1

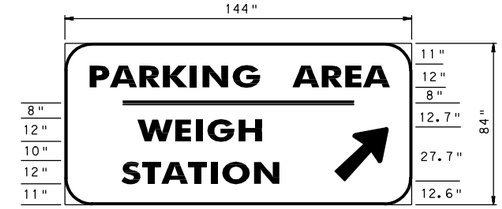

2" BAR TYPE G ARROW

11.2	22.0	29.1	20.7
10.3--P	100.0--(BAR LENGTH)	12.8--W	10.3--S
12.3--A	22.0	9.6--E	8.1--T
10.9--R	144.0"	4.7--I	10.8--A
10.5--K		10.9--G	9.6--T
4.7--I		8.1--H	4.7--I
10.9--N		29.1	11.3--O
8.1--G		27.7--ARROW	8.1--N
12.0		12.0	20.7
12.3--A		144.0"	27.7--ARROW
10.9--R			12.0
8.8--E			144.0"
10.0--A			
11.1			
144.0"			

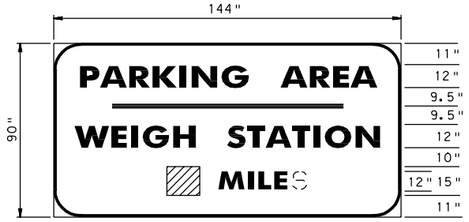

2" BAR

11.2	22.0	11.5			
10.3--P	100.0--(BAR	12.8--W	--		--
12.3--A	22.0 LENGTH)	9.6--E	18.0		18.0
10.9--R	144.0"	4.7--I	12.1--M		12.1--M
10.5--K		10.9--G	4.7--I	OR	4.7--I
4.7--I		8.1--H	9.6--L		9.6--L
10.9--N		12.0	7.3--E		9.6--E
8.1--G		10.3--S			8.1--S
12.0		8.1--T			
12.3--A		10.8--A			
10.9--R		9.6--T			
8.8--E		4.7--I			
10.0--A		11.3--O			
11.1		8.1--N			
144.0"		11.5			
		144.0"			

TYPE G ARROW

12.3	25.2
10.3--P	12.3--A
12.3--A	10.9--R
10.9--R	8.8--E
10.5--K	10.0--A
4.7--I	25.1
10.9--N	27.7--ARROW
8.1--G	12.0
12.3	132.0"
27.7--ARROW	
12.0	
132.0"	

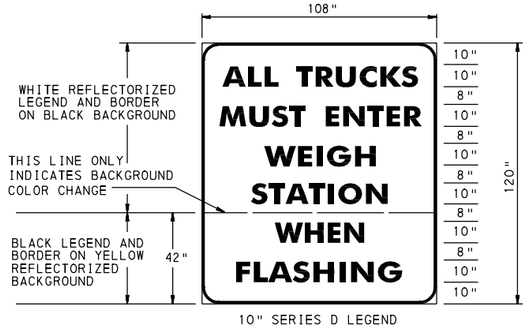

10" SERIES D LEGEND

11.7	12.4	34.9	27.9	36.8	22.6
10.2--A	10.1--M	10.6--W	8.6--S	10.6--W	8.0--F
8.0--L	9.1--U	8.0--E	6.7--T	9.1--H	6.7--L
6.1--L	8.6--S	3.9--I	9.0--A	8.0--E	10.2--A
10.0	6.1--T	9.1--G	8.0--T	6.7--N	9.1--S
8.0--T	10.0	6.7--H	3.9--I	36.8	9.1--H
9.1--R	8.0--E	34.8	9.4--O	108.0"	3.9--I
9.1--U	8.6--N	108.0"	6.7--N		9.1--N
8.6--C	8.0--T		27.8		6.7--G
8.8--K	8.0--E		108.0"		22.6
6.7--S	6.7--R				108.0"
11.7	12.4				
108.0"	108.0"				

NOTES:

1. DEFINITION: PARKING AREAS DO NOT HAVE PERMANENT REST ROOM FACILITIES.
2. DISTANCE: USE DISTANCE FROM THEORETICAL GORE FOR DISTANCE INDICATED ON SIGNS.
3. COLOR: USE BLUE REFLECTORIZED BACKGROUND WITH WHITE REFLECTORIZED DIRECT APPLIED LEGEND AND BORDER, UNLESS OTHERWISE NOTED.
4. BORDERS: USE 2" WIDE BORDER WITH 12" CORNER RADII, UNLESS OTHERWISE NOTED.
5. LEGEND AND SIGN WIDTH: UNLESS OTHERWISE NOTED, USE 12" SERIES D UPPER CASE FOR LEGEND, AND 15" SERIES D FOR DIGITS. SEE TC-8700C FOR LAYOUTS OF ARROWS AND FRACTIONS, AND FOR DETERMINING SIGN WIDTHS.
6. POSTS: USE POSTS OF AN APPROVED BREAKAWAY DESIGN, EITHER STEEL (TC-8702A OR TC-8702B) OR WOOD (TC-8702E).
7. A4-1 SIGN: USE ONLY WHEN SEPARATE PARKING AREAS ARE PROVIDED.
8. MINIMUM SIGN SPACING: MAINTAIN 800' MINMUM SPACING FOR ALL SIGNS PRIOR TO DECELERATION LANE.
9. ALL DIMENSIONS ARE IN INCHES UNLESS OTHERWISE NOTED.

ENGLISH UNITS

COMMONWEALTH OF PENNSYLVANIA
DEPARTMENT OF TRANSPORTATION
BUREAU OF HIGHWAY SAFETY AND TRAFFIC ENGINEERING

FREEWAY AND EXPRESSWAY ADVANCE SIGNING

PARKING AREAS

RECOMMENDED MAY 25, 2007	RECOMMENDED MAY 25, 2007	SHT. 2 OF 2
Glenn C Rowe	M. C. Patel	
CHIEF, TRAFFIC ENGINEERING AND OPERATIONS DIVISION	CHIEF HIGHWAY ENGINEER	TC-8701P

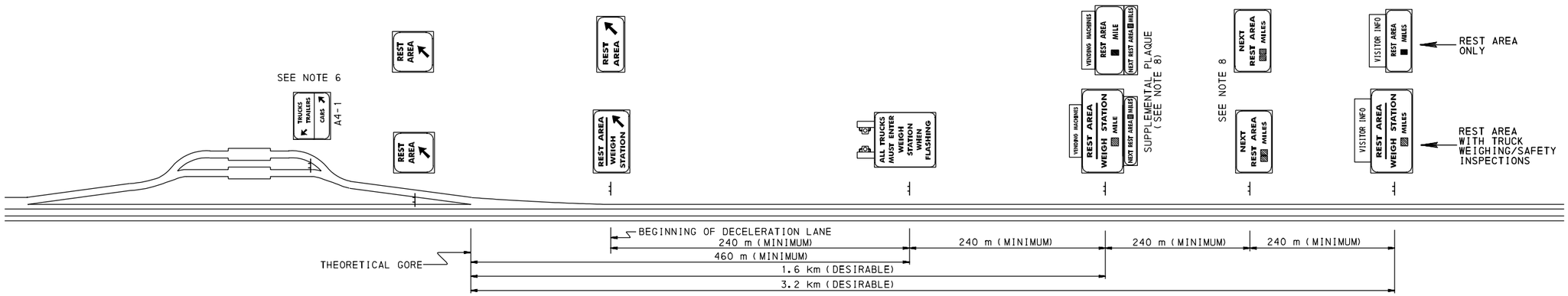

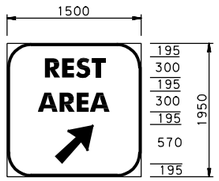

TYPE N ARROW

267	217	465
276--R	312--A	570--ARROW
243--E	276--R	465
262--S	224--E	1500
186--T	255--A	
266	216	
1500	1500	

50 mm BAR TYPE G ARROW

408	525	494	281
276--R	2100--(BAR LENGTH)	324--W	262--S
243--E	525	243--E	205--T
262--S	3150	119--I	274--A
186--T		276--G	243--T
300		205--H	119--I
312--A		494	285--O
276--R		695--ARROW	205--N
224--E		300	281
255--A		3150	695--ARROW
408			300
3150			3150

50 mm BAR

633	700	270	--	450	--
276--R	2200--(BAR	324--W	450	307--M	450
243--E	700 LENGTH)	243--E	307--M	119--I	307--M
262--S	3600	119--I	119--I OR	243--L	119--I
186--T		276--G	243--L	186--E	243--L
300		205--H	186--E		243--E
312--A		300			205--S
276--R		262--S			
224--E		205--T			
255--A		274--A			
633		243--T			
3600		119--I			
		285--O			
		205--N			
		270			
		3600			

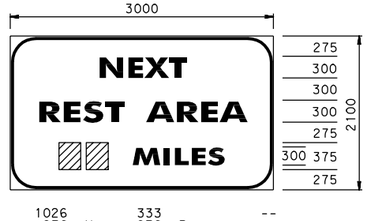

1026	333	--
276--N	276--R	--
243--E	243--E	450
243--X	262--S	307--M
186--T	186--T	119--I
1026	300	243--L
3000	312--A	243--E
	276--R	205--S
	224--E	
	255--A	
	333	
	3000	

SUPPLEMENTAL SIGN

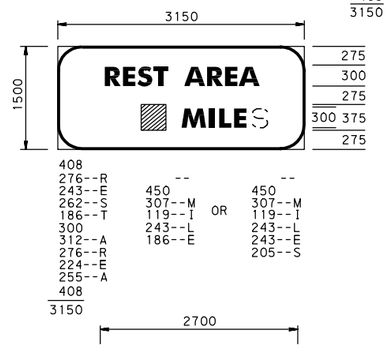

408	--	--	
276--R	450	450	
243--E	307--M OR	307--M	
262--S	119--I	119--I	
186--T	243--L	243--L	
300	186--E	243--E	
312--A		205--S	
276--R			
224--E			
255--A			
408			
3150			

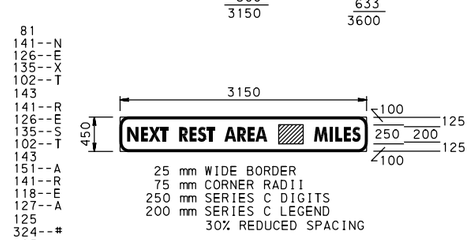

SUPPLEMENTAL PLAQUE

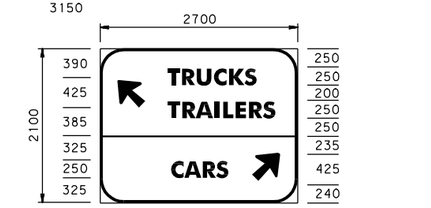

50 mm BAR 250 mm SERIES D LEGEND TYPE B ARROWS

224	224	899
425--ARROW	425--ARROW	203--C
250	250	260--A
203--T	203--T	219--R
230--R	219--R	171--S
230--U	260--A	299
219--C	99--I	425--ARROW
223--K	203--L	224
171--S	203--E	2700
525	219--R	
2700	171--S	
	224	
	2700	

TYPE G ARROW

369	319
276--R	312--A
243--E	276--R
262--S	224--E
186--T	255--A
369	319
695--ARROW	695--ARROW
300	300
2700	2700

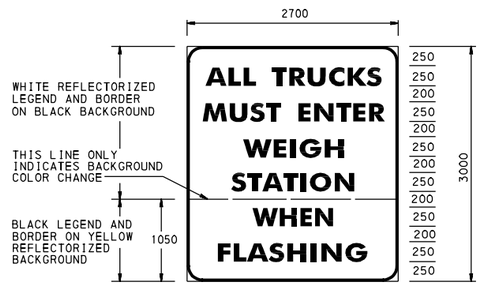

250 mm SERIES D LEGEND

278	296	864	686	913	553
260--A	255--M	270--W	219--S	270--W	203--F
203--L	230--U	203--E	171--T	230--H	171--L
155--L	219--S	99--I	228--A	203--E	260--A
250	155--T	230--G	203--T	171--N	230--S
203--T	250	171--H	99--I	913	230--H
230--R	203--E	863	238--O	2700	99--I
230--U	219--N	2700	171--N		230--N
219--C	203--T		685		171--G
223--K	203--E		2700		553
171--S	171--R				2700
278	296				
2700	2700				

A4-1

NOTES:

1. DISTANCE: USE DISTANCE FROM THEORETICAL GORE FOR DISTANCE INDICATED ON SIGNS.
2. COLOR: USE BLUE REFLECTORIZED BACKGROUND WITH WHITE REFLECTORIZED DIRECT APPLIED LEGEND AND BORDER, UNLESS OTHERWISE NOTED.
3. BORDERS: USE 50 mm WIDE BORDER WITH 300 mm CORNER RADII, UNLESS OTHERWISE NOTED.
4. LEGEND AND SIGN WIDTH: UNLESS OTHERWISE NOTED, USE 300 mm SERIES D UPPER CASE FOR LEGEND, AND 375 mm SERIES D FOR DIGITS. SEE TC-8700C FOR LAYOUTS OF ARROWS AND FRACTIONS, AND FOR DETERMINING SIGN WIDTHS.
5. POSTS: USE POSTS OF AN APPROVED BREAKAWAY DESIGN, EITHER STEEL (TC-8702A OR TC-8702B) OR WOOD (TC-8702E).
6. A4-1 SIGN: USE ONLY WHEN SEPARATE PARKING AREAS ARE PROVIDED.
7. MINIMUM SIGN SPACING: MAINTAIN 240 m MINIMUM SPACING FOR ALL SIGNS PRIOR TO DECELERATION LANE.
8. NEXT REST AREA SUPPLEMENTAL SIGN: THIS SIGN MAY BE ELIMINATED IF SUFFICIENT SIGN SPACING DOES NOT EXIST. WHEN THIS SIGN IS ELIMINATED, ONLY THEN INSTALL "NEXT REST AREA -- MILES" SUPPLEMENTAL PLAQUE UNDER SECOND ADVANCE SIGN.
9. VISITOR INFO SIGN (D5-6-1): USE AS SHOWN IF THE REST AREA IS STAFFED TO PROVIDE VISITOR (TOURIST) INFORMATION IN ACCORDANCE WITH DEPARTMENT POLICY. SEE PUBLICATION 236M FOR LAYOUT. IF THE SIGN NEEDS TO BE COVERED PERIODICALLY OR IF A FOLDING SIGN IS USED, IT MAY BE MOUNTED BELOW THE MAIN SIGN, PROVIDED PROPER SIGN HEIGHT IS MAINTAINED AND THE BREAKAWAY FEATURE OF THE POSTS IS UNAFFECTED.
10. VENDING MACHINES SIGN (D5-6-2): USE IF VENDING MACHINES ARE AVAILABLE. SEE PUBLICATION 236M FOR LAYOUT. SEE NOTE 9 CONCERNING ALTERNATE LOCATION FOR FOLDING SIGNS.
11. ALL DIMENSIONS ARE IN MILLIMETERS UNLESS OTHERWISE NOTED.

METRIC UNITS

COMMONWEALTH OF PENNSYLVANIA
DEPARTMENT OF TRANSPORTATION
BUREAU OF HIGHWAY SAFETY AND TRAFFIC ENGINEERING

FREEWAY AND EXPRESSWAY ADVANCE SIGNING

REST AREAS

RECOMMENDED MAY 25, 2007
Glenn C Rowe
CHIEF, TRAFFIC ENGINEERING AND OPERATIONS DIVISION

RECOMMENDED MAY 25, 2007
M. L. Patel
CHIEF HIGHWAY ENGINEER

SHT. 1 OF 2

TC-8701R

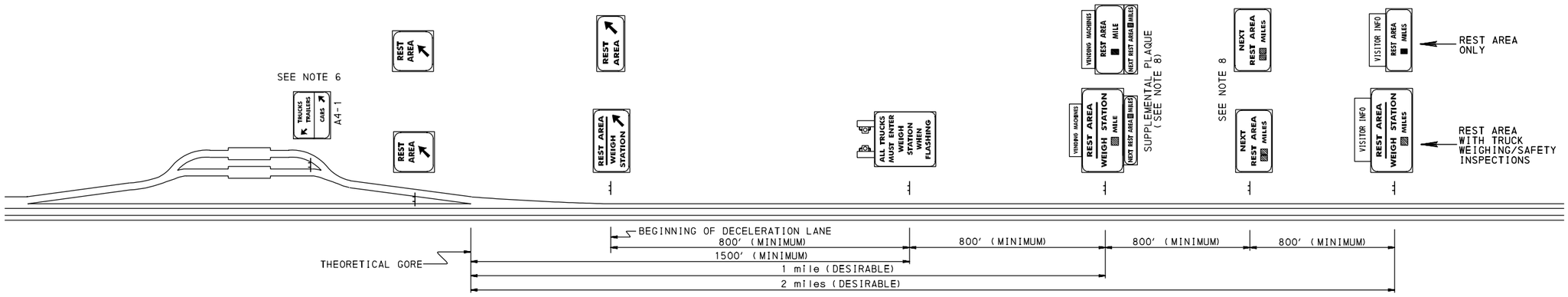

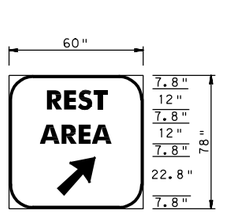

TYPE N ARROW

11.0	9.0	18.6
10.9--R	12.3--A	22.8--ARROW
9.6--E	10.9--R	18.6
10.3--S	8.8--E	60.0"
7.3--T	10.0--A	
10.9	9.0	
60.0"	60.0"	

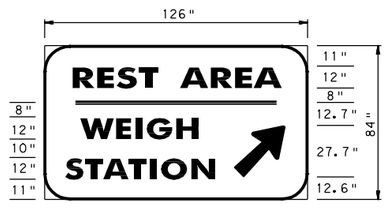

2" BAR TYPE G ARROW

17.0	21.0	20.1	11.7
10.9--R	84.0--(BAR	12.8--W	10.3--S
9.6--E	21.0 LENGTH)	9.6--E	8.1--T
10.3--S	126.0"	4.7--I	10.8--A
7.3--T		10.9--G	9.6--T
12.0		8.1--H	4.7--I
12.3--A		20.1	11.3--O
10.9--R		27.7--ARROW	8.1--N
8.8--E		12.0	11.7
10.0--A		126.0"	27.7--ARROW
16.9			12.0
126.0"			126.0"

2" BAR

26.0	28.0	11.5	--	--	
10.9--R	88.0--(BAR	12.8--W	18.0	18.0	
9.6--E	28.0 LENGTH)	9.6--E	12.1--M	12.1--M	
10.3--S	144.0"	4.7--I	4.7--I	4.7--I	
7.3--T		10.9--G	9.6--L	9.6--L	
12.0		8.1--H	7.3--E	9.6--E	
12.3--A		12.0		8.1--S	
10.9--R		10.3--S	OR		
8.8--E		8.1--T			
10.0--A		10.8--A			
25.9		9.6--T			
144.0"		4.7--I			
		11.3--O			
		8.1--N			
		11.5			
		144.0"			

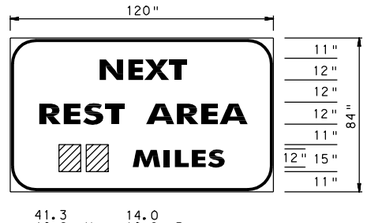

SUPPLEMENTAL SIGN

41.3	14.0	--
10.9--N	10.9--R	18.0
9.6--E	9.6--E	12.1--M
9.6--X	10.3--S	4.7--I
7.3--T	7.3--T	9.6--L
41.3	12.0	9.6--E
120.0"	12.3--A	8.1--S
	10.9--R	
	8.8--E	
	10.0--A	
	13.9	
	120.0"	

17.0	--	--
10.9--R	18.0	18.0
9.6--E	12.1--M	12.1--M
10.3--S	4.7--I OR	4.7--I
7.3--T	9.6--L	9.6--L
12.0	7.3--E	9.6--E
12.3--A		8.1--S
10.9--R		
8.8--E		
10.0--A		
16.9		
126.0"		

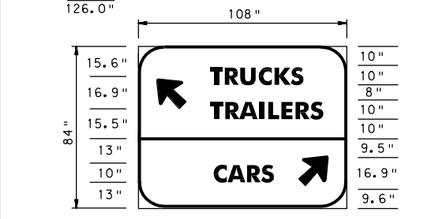

2" BAR 10" SERIES D LEGEND TYPE B ARROWS

9.6	9.6	36.5
16.9--ARROW	16.9--ARROW	8.0--C
10.0	10.0	10.2--A
8.0--T	8.0--T	8.6--R
9.1--R	8.6--R	6.7--S
9.1--U	10.2--A	11.5
8.6--C	3.9--I	16.9--ARROW
8.8--K	8.0--L	9.6
6.7--S	8.0--E	108.0"
21.2	8.6--R	
108.0"	6.7--S	
	9.5	
	108.0"	

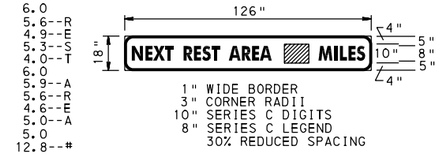

1" WIDE BORDER
3" CORNER RADII
10" SERIES C DIGITS
8" SERIES C LEGEND
30% REDUCED SPACING

3.8	3.8
5.6--N	5.6--R
4.9--E	4.9--E
5.3--X	5.3--S
4.0--T	4.0--T
6.0	6.0
5.6--R	5.9--A
4.9--E	5.6--R
5.3--S	4.6--E
4.0--T	5.0--A
6.0	5.0
5.9--A	12.8--#
5.6--R	5.0
4.6--E	6.4--M
5.0--A	2.3--I
5.0	4.9--L
12.8--#	4.9--E
5.0	4.4--S
6.4--M	3.8
2.3--I	126.0
4.9--L	
4.9--E	
4.4--S	
3.8	
126.0	

SUPPLEMENTAL PLAQUE

TYPE G ARROW

15.1	13.2
10.9--R	12.3--A
9.6--E	10.9--R
10.3--S	8.8--E
7.3--T	10.0--A
15.1	13.1
27.7--ARROW	27.7--ARROW
12.0	12.0
108.0"	108.0"

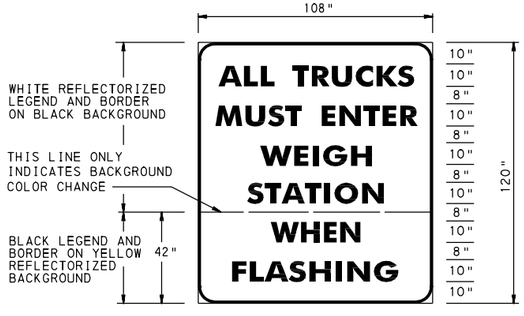

10" SERIES D LEGEND

11.7	12.4	34.9	27.9	36.8	22.6
10.2--A	10.1--M	10.6--W	8.6--S	10.6--W	8.0--F
8.0--L	9.1--U	8.0--E	6.7--T	9.1--H	6.7--L
6.1--L	8.6--S	3.9--I	9.0--A	8.0--E	10.2--A
10.0	6.1--T	9.1--G	8.0--T	6.7--N	9.1--S
8.0--T	10.0	6.7--H	3.9--I	36.8	9.1--H
9.1--R	8.0--E	34.8	9.4--O	108.0"	3.9--I
9.1--U	8.6--N	108.0"	6.7--N		9.1--N
8.6--C	8.0--T		27.8		6.7--G
8.8--K	8.0--E		108.0"		22.6
6.7--S	6.7--R				108.0"
11.7	12.4				
108.0"	108.0"				

NOTES:

1. DISTANCE: USE DISTANCE FROM THEORETICAL GORE FOR DISTANCE INDICATED ON SIGNS.
2. COLOR: USE BLUE REFLECTORIZED BACKGROUND WITH WHITE REFLECTORIZED DIRECT APPLIED LEGEND AND BORDER, UNLESS OTHERWISE NOTED.
3. BORDERS: USE 2" WIDE BORDER WITH 12" CORNER RADII, UNLESS OTHERWISE NOTED.
4. LEGEND AND SIGN WIDTH: UNLESS OTHERWISE NOTED, USE 12" SERIES D UPPER CASE FOR LEGEND, AND 15" SERIES D FOR DIGITS. SEE TC-8700C FOR LAYOUTS OF ARROWS AND FRACTIONS, AND FOR DETERMINING SIGN WIDTHS.
5. POSTS: USE POSTS OF AN APPROVED BREAKAWAY DESIGN, EITHER STEEL (TC-8702A OR TC-8702B) OR WOOD (TC-8702E).
6. A4-1 SIGN: USE ONLY WHEN SEPARATE PARKING AREAS ARE PROVIDED.
7. MINIMUM SIGN SPACING: MAINTAIN 800' MINIMUM SPACING FOR ALL SIGNS PRIOR TO DECELERATION LANE.
8. NEXT REST AREA SUPPLEMENTAL SIGN: THIS SIGN MAY BE ELIMINATED IF SUFFICIENT SIGN SPACING DOES NOT EXIST. WHEN THIS SIGN IS ELIMINATED, ONLY THEN INSTALL "NEXT REST AREA -- MILES" SUPPLEMENTAL PLAQUE UNDER SECOND ADVANCE SIGN.
9. VISITOR INFO SIGN (D5-6-1): USE AS SHOWN IF THE REST AREA IS STAFFED TO PROVIDE VISITOR (TOURIST) INFORMATION IN ACCORDANCE WITH DEPARTMENT POLICY. SEE PUBLICATION 236M FOR LAYOUT. IF THE SIGN NEEDS TO BE COVERED PERIODICALLY OR IF A FOLDING SIGN IS USED, IT MAY BE MOUNTED BELOW THE MAIN SIGN, PROVIDED PROPER SIGN HEIGHT IS MAINTAINED AND THE BREAKAWAY FEATURE OF THE POSTS IS UNAFFECTED.
10. VENDING MACHINES SIGN (D5-6-2): USE IF VENDING MACHINES ARE AVAILABLE. SEE PUBLICATION 236M FOR LAYOUT. SEE NOTE 9 CONCERNING ALTERNATE LOCATION FOR FOLDING SIGNS.
11. ALL DIMENSIONS ARE IN MILLIMETERS UNLESS OTHERWISE NOTED.

ENGLISH UNITS

COMMONWEALTH OF PENNSYLVANIA
DEPARTMENT OF TRANSPORTATION
BUREAU OF HIGHWAY SAFETY AND TRAFFIC ENGINEERING

FREEWAY AND EXPRESSWAY ADVANCE SIGNING

REST AREAS

RECOMMENDED MAY 25, 2007	RECOMMENDED MAY 25, 2007	SHT. 2 OF 2
Glenn C. Rowe	M. G. Patel	
CHIEF, TRAFFIC ENGINEERING AND OPERATIONS DIVISION	CHIEF HIGHWAY ENGINEER	TC-8701R

A4-1

METRIC UNITS

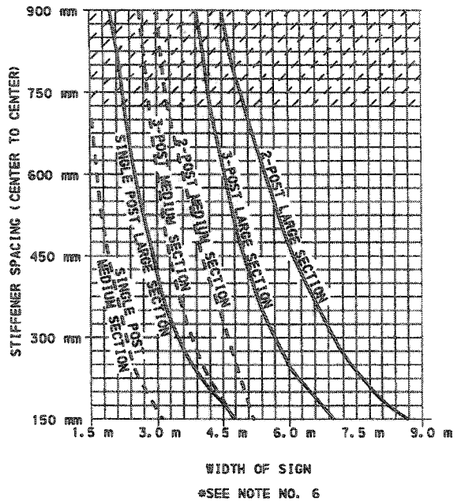

ENGLISH UNITS

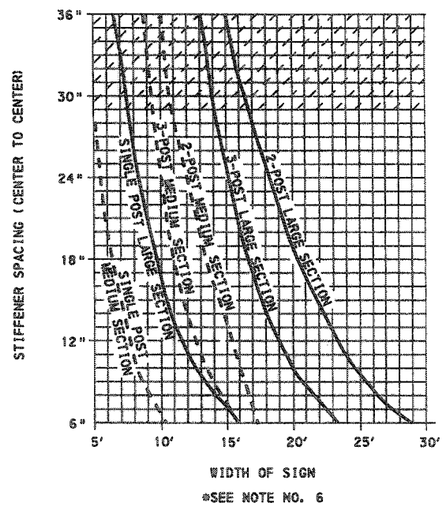

STIFFENER SPACING CHARTS

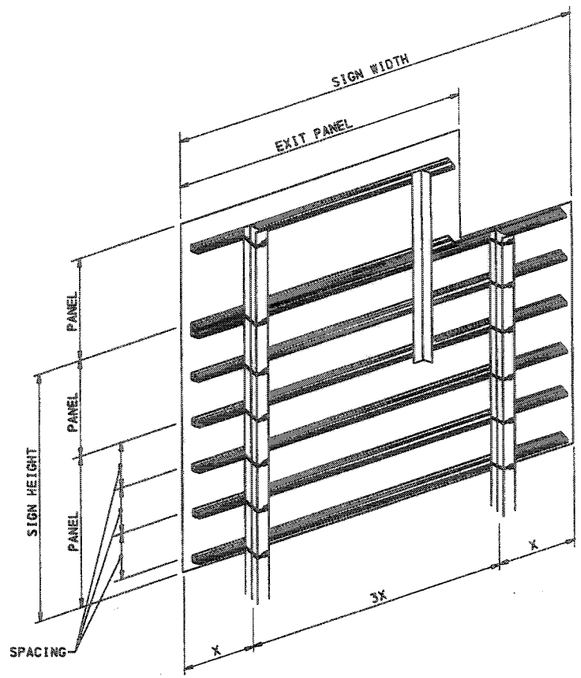

STIFFENER LOCATION

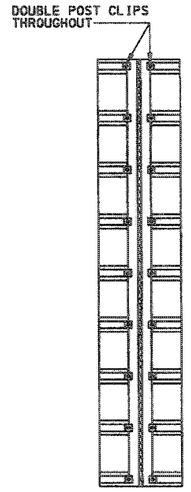

REAR VIEW
(POST & OVERHEAD MOUNTED)

NOTES:

1. THIS STANDARD SHALL APPLY TO LARGE REFLECTORIZED SIGNS MANUFACTURED FROM FLAT SHEET ALUMINUM, BRACED WITH EXTRUDED ALUMINUM STIFFENERS, AND CONNECTED TO A SPECIFIED TYPE OF POST (OR VERTICAL SUPPORT OF A STRUCTURE) BY USE OF TWIST-IN TOGGLE AND BUCKLE STRAPS, OR STAINLESS STEEL POST CLIPS. WHEN POST CLIPS ARE USED, A DOUBLE POST CLIP PATTERN IS REQUIRED FOR BOTH POST MOUNTED AND OVERHEAD SIGN INSTALLATIONS.
2. ALL MATERIALS AND WORKMANSHIP SHALL CONFORM TO THIS STANDARD AND PUB. 408.
3. THE STIFFENER SPACING CHART ON THIS SHEET IS DESIGNED TO ACCOMODATE "SINGLE-POST" INSTALLATIONS AND "MULTIPLE-POST" INSTALLATIONS WHERE THE SPACING BETWEEN THE POSTS (OR VERTICAL SUPPORTS) IS THREE TIMES THE SIGN OVERHANG BEYOND THE END POSTS. (THE SPACING BETWEEN THE POSTS ON A "TWO-POST" INSTALLATION IS THREE-FIFTHS OF THE SIGN WIDTH, AND SPACING BETWEEN THE POSTS ON A "THREE-POST" INSTALLATION IS ONE-THIRD OF THE SIGN WIDTH.)
4. WHEN SIGNS ARE TO BE INSTALLED AND THE SPACING OF THE POSTS IS OTHER THAN THOSE INDICATED IN NOTE NO. 3, THE FABRICATOR SHOULD CONSULT THE DISTRICT TRAFFIC ENGINEER FOR THE PROPER SPACING OF THE STIFFENERS. HOWEVER, THE SPACING BETWEEN THE STIFFENERS SHALL NOT BE GREATER THAN THE SPACING INDICATED IN THE CHART FOR THE SAME WIDTH OF SIGN.
5. TO USE THE STIFFENER SPACING CHART, START WITH THE SIGN WIDTH AND GO VERTICALLY UPWARD UNTIL INTERSECTING THE CURVED LINE INDICATING THE PROPER NUMBER OF POSTS (OR VERTICAL SUPPORTS) AND THE TYPE OF STIFFENER SECTION TO BE USED. THE MAXIMUM STIFFENER SPACING IS INDICATED HORIZONTALLY TO THE LEFT.
6. THE MAXIMUM STIFFENER SPACING IS NORMALLY 725 (29"). HOWEVER, FOR SIGNS MADE OF A CONTINUOUS SHEET OF ALUMINUM THROUGHOUT THE HEIGHT OF THE SIGN AND ON WHICH THE FLAT SHEET ALUMINUM OVERHANGS BOTH THE TOP AND BOTTOM STIFFENERS BY A DISTANCE EQUAL TO ONE-THIRD OF THE SPACING BETWEEN STIFFENERS, STIFFENERS SPACINGS INDICATED IN THE SHADED PORTION OF THE CHART MAY BE USED. (EXAMPLE: A 3600 x 1500 (144" x 60") SIGN COULD BE INSTALLED ON TWO POSTS USING ONLY TWO LARGE SECTION STIFFENERS SPACED AT THE ULTIMATE 900 (36") SPACING, WITH 300 (12") OF THE SIGN ABOVE THE TOP STIFFENER AND 300 (12") OF THE SIGN BELOW THE BOTTOM STIFFENER.)
7. PANELS MAY BE SPLICED USING ANY OF THREE ARRANGEMENTS SHOWN ON SHEET 2 OF 3 OF THIS STANDARD.
8. SEE TC-8702E FOR INSTALLATION ON WOOD POSTS.
9. ALL DIMENSIONS ARE IN MILLIMETERS UNLESS OTHERWISE NOTED. ENGLISH UNITS IN PARENTHESIS ().
10. EITHER ALL METRIC OR ALL ENGLISH UNITS MUST BE USED ON PLANS. METRIC AND ENGLISH UNITS SHOWN MAY NOT BE MIXED.

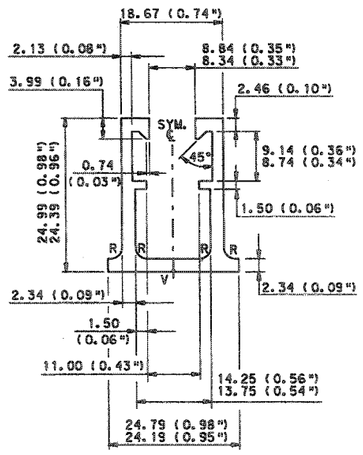

V = VEE GROOVE 0.25 (0.01") DEEP x 90°
R = 2.49 (0.10") RADIUS

MEDIUM SECTION

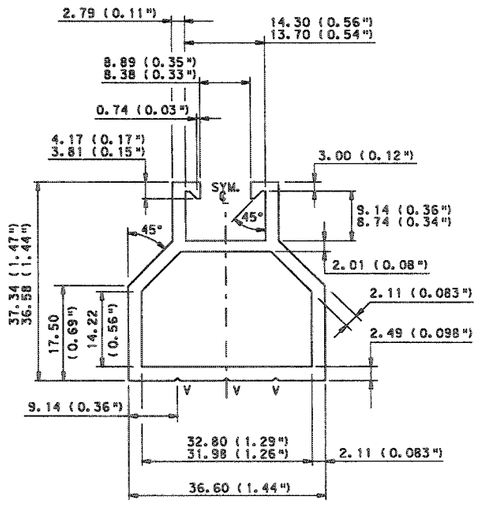

V = VEE GROOVE 0.38 (0.015") DEEP x 90°

LARGE SECTION

COMMONWEALTH OF PENNSYLVANIA
DEPARTMENT OF TRANSPORTATION
BUREAU OF HIGHWAY SAFETY AND TRAFFIC ENGINEERING

FLAT SHEET ALUMINUM SIGNS WITH EXTRUDED ALUMINUM STIFFENERS

GENERAL INFORMATION

RECOMMENDED JUL. 18, 2008	RECOMMENDED JUL. 18, 2008	SHT. 1 OF 4
CHIEF, TRAFFIC ENGINEERING AND OPERATIONS DIVISION	ACTING DIR. BUR. OF HIGHWAY SAFETY AND TRAFFIC ENGINEERING	TC-8701S

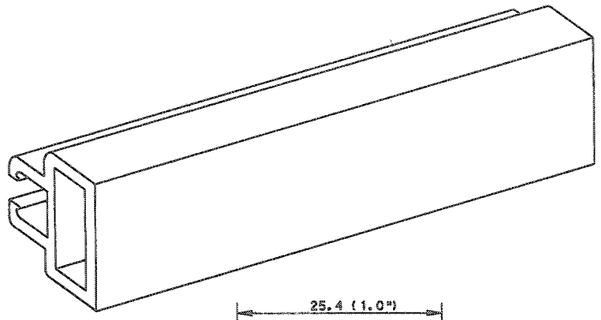

ALUMINUM EXTRUSION SIGN BRACE

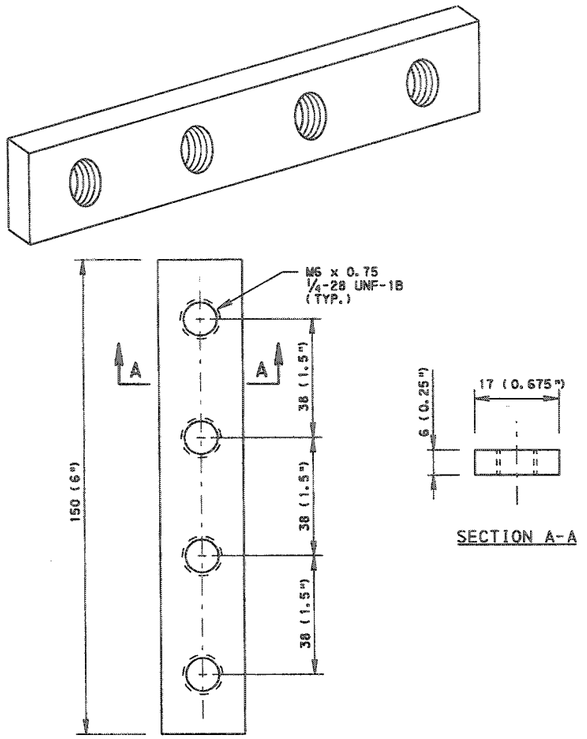

SECTION A-A

SPLICE PLATE

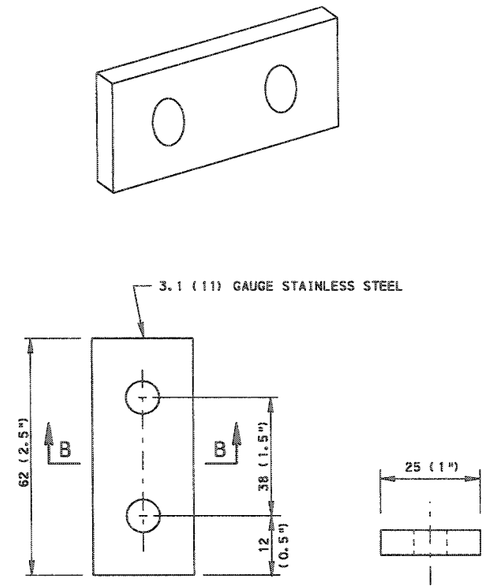

SECTION B-B

BUTTING PLATE

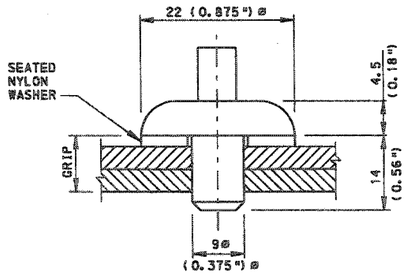

SECTION C-C

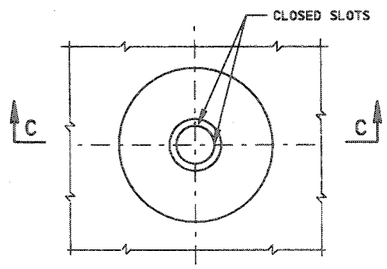

RIVET

COMMONWEALTH OF PENNSYLVANIA
DEPARTMENT OF TRANSPORTATION
BUREAU OF HIGHWAY SAFETY AND TRAFFIC ENGINEERING

FLAT SHEET ALUMINUM SIGNS WITH EXTRUDED ALUMINUM STIFFENERS

GENERAL INFORMATION

RECOMMENDED JUL. 18, 2008	RECOMMENDED JUL. 18, 2008	SHT. 2 OF 4
CHIEF, TRAFFIC ENGINEERING AND OPERATIONS DIVISION	ACTING DIR. BUR. OF HIGHWAY SAFETY AND TRAFFIC ENGINEERING	TC-8701S

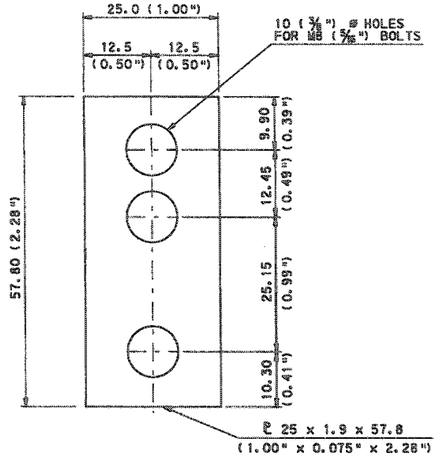

BUTTING PLATE

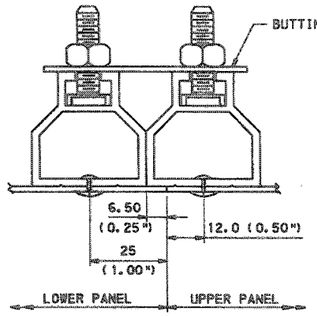

DOUBLE LARGE SECTION PANEL SPLICE

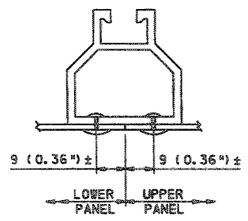

SINGLE LARGE SECTION PANEL SPLICE

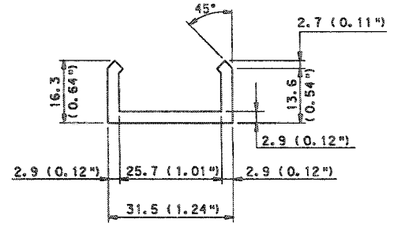

LARGE SECTION SPLICE BAR

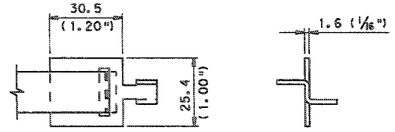

TWIST-IN TOGGLE

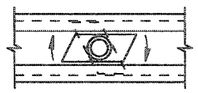

BOLT HEAD LOCKS INTO CHANNEL AS NUT IS TIGHTENED.

TWIST-IN BOLT

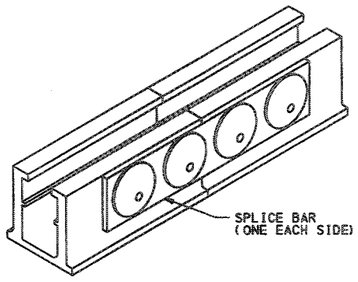

MEDIUM SECTION SPLICE

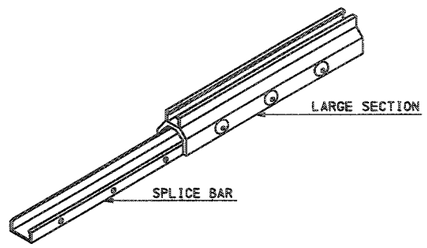

LARGE SECTION SPLICE

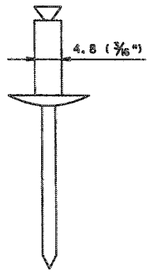

POP RIVET

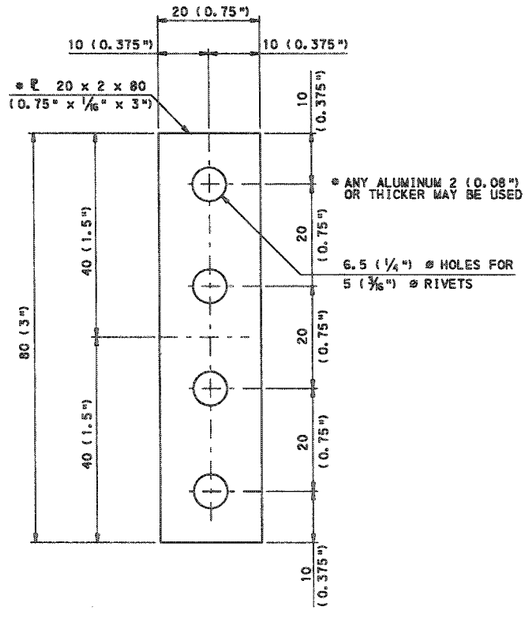

MEDIUM SECTION SPLICE BAR

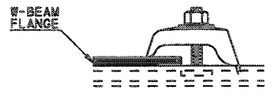

POST CLIP SF-VHB

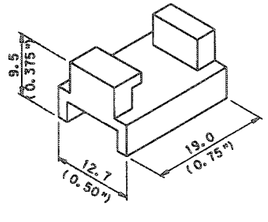

PLASTIC INSERT

NOTES:

1. ALL DIMENSIONS ARE IN MILLIMETERS UNLESS OTHERWISE NOTED. ENGLISH UNITS IN PARENTHESIS ().
2. EITHER ALL METRIC OR ALL ENGLISH UNITS MUST BE USED ON PLANS. METRIC AND ENGLISH UNITS SHOWN MAY NOT BE MIXED.

COMMONWEALTH OF PENNSYLVANIA
DEPARTMENT OF TRANSPORTATION
BUREAU OF HIGHWAY SAFETY AND TRAFFIC ENGINEERING

FLAT SHEET ALUMINUM SIGNS WITH EXTRUDED ALUMINUM STIFFENERS

SPLICE AND CONNECTION DETAILS

RECOMMENDED JUL. 18, 2008	RECOMMENDED JUL. 18, 2008	SHT. 3 OF 4
CHIEF, TRAFFIC ENGINEERING AND OPERATIONS DIVISION	ACTING DIR. BUR. OF HIGHWAY SAFETY AND TRAFFIC ENGINEERING	TC-8701S

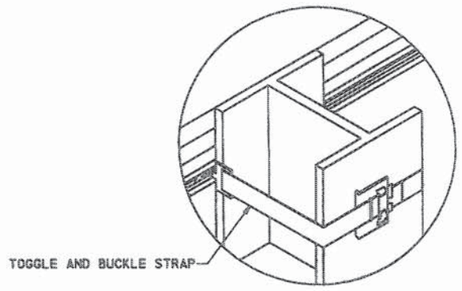

DETAIL 1

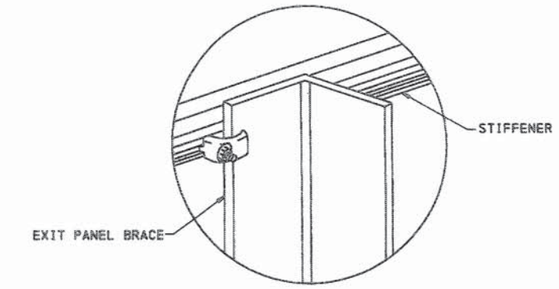

DETAIL 2

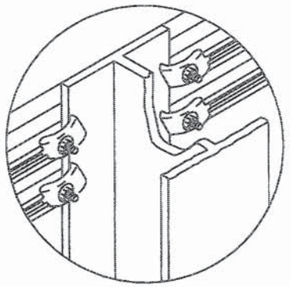

DETAIL 3A

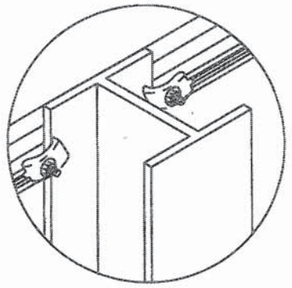

DETAIL 1A

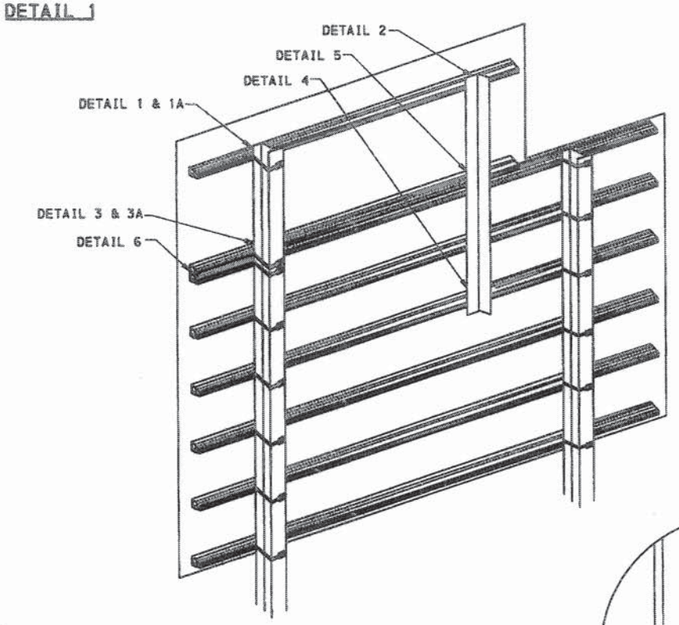

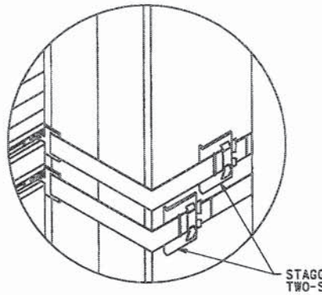

DETAIL 3

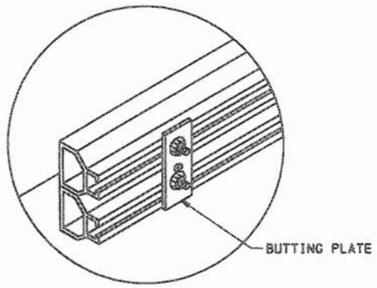

DETAIL 6

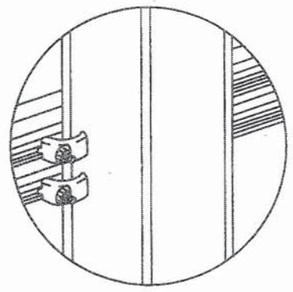

DETAIL 5

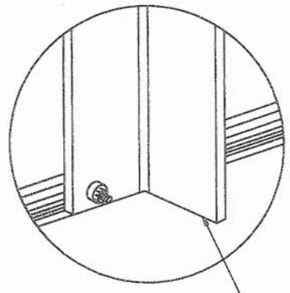

DETAIL 4

NOTES:

1. ALL DIMENSIONS ARE IN MILLIMETERS UNLESS OTHERWISE NOTED. ENGLISH UNITS IN PARENTHESIS ().
2. EITHER ALL METRIC OR ALL ENGLISH UNITS MUST BE USED ON PLANS. METRIC AND ENGLISH UNITS SHOWN MAY NOT BE MIXED.

COMMONWEALTH OF PENNSYLVANIA
DEPARTMENT OF TRANSPORTATION
BUREAU OF HIGHWAY SAFETY AND TRAFFIC ENGINEERING

FLAT SHEET ALUMINUM SIGNS WITH EXTRUDED ALUMINUM STIFFENERS

POST & STIFFENER CONNECTIONS

RECOMMENDED JUL. 18, 2008	RECOMMENDED JUL. 18, 2008	SHT. 4 OF 4
CHIEF, TRAFFIC ENGINEERING AND OPERATIONS DIVISION	ACTING DIR. BUR. OF HIGHWAY SAFETY AND TRAFFIC ENGINEERING	TC-8701S

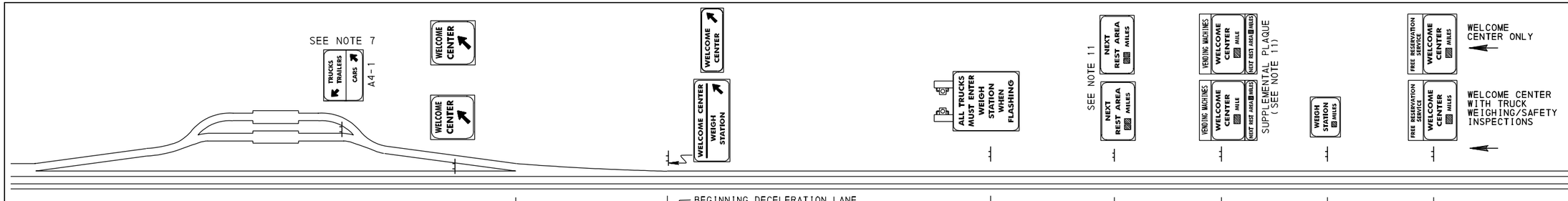

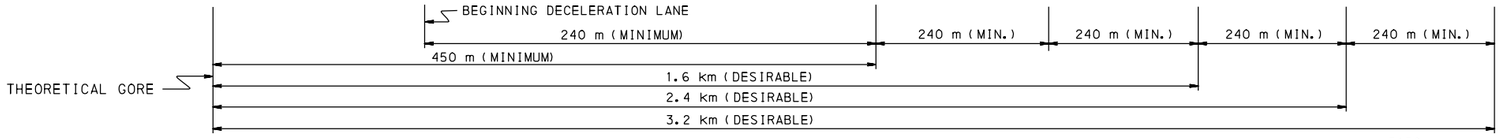

TYPE N ARROW

275	471	915
324--W	262--C	570--ARROW
243--E	243--E	915
243--L	262--N	2400
262--C	243--T	
285--O	243--E	
307--M	205--R	
186--E	471	
275	2400	
2400		

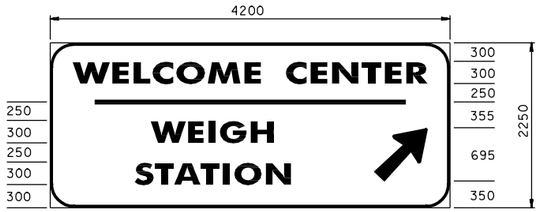

50 mm BAR TYPE G ARROW

296	450	1019	806
324--W	3300--(BAR	324--W	262--S
243--E	450 LENGTH)	243--E	205--T
243--L	4200	119--I	274--A
262--C		276--G	243--T
285--O		205--H	119--I
307--M		1019	285--O
186--E		695--ARROW	205--N
300		300	806
262--C		4200	695--ARROW
243--E			300
262--N			4200
243--T			
243--E			
205--R			
296			
4200			

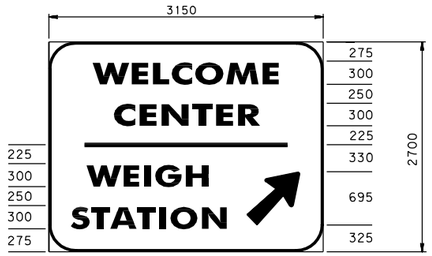

50 mm BAR TYPE G ARROW

650	846	475	494	281
324--W	262--C	2200--(BAR	324--W	262--S
243--E	243--E	475 LENGTH)	243--E	205--T
243--L	262--N	3150	119--I	274--A
262--C	243--T		276--G	243--T
285--O	243--E		205--H	119--I
307--M	205--R		494	285--O
186--E	846		695--ARROW	205--N
650	3150		300	281
3150			3150	695--ARROW
				300
				3150

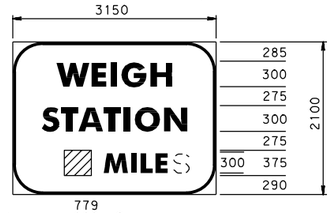

992	779	--	--	
324--W	262--S			450
243--E	205--T	450	450	307--M
119--I	274--A	307--M	307--M	OR 119--I
276--G	243--T	119--I	OR 119--I	243--L
205--H	119--I	243--L	243--L	243--E
991	285--O	186--E	243--E	205--S
3150	205--N		205--S	
	778			
	3150			

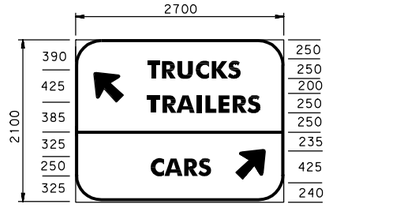

650	846	--	--	
324--W	262--C			450
243--E	243--E	450	450	307--M
243--L	262--N	307--M	307--M	OR 119--I
262--C	243--T	119--I	OR 119--I	243--L
285--O	243--E	243--L	243--L	243--E
307--M	205--R	186--E	243--E	205--S
186--E	846		205--S	
650	3150			
3150				

50 mm BAR 250 mm SERIES D LEGEND TYPE B ARROWS

224	224	899
425--ARROW	425--ARROW	203--C
250	250	260--A
203--T	203--T	219--R
230--R	219--R	171--S
230--U	260--A	299
219--C	99--I	425--ARROW
223--K	203--L	224
171--S	203--E	2700
525	219--R	
2700	171--S	
	224	
	2700	

TYPE G ARROW

303	499
324--W	262--C
243--E	243--E
243--L	262--N
262--C	243--T
285--O	243--E
307--M	205--R
186--E	498
302	695--ARROW
695--ARROW	300
300	3450
3450	

ALTERNATE WELCOME CENTER/WEIGH STATION EXIT DIRECTION SIGN

NOTE:
THIS SIGN MAY BE USED ONLY IF INSUFFICIENT WIDTH IS AVAILABLE TO ERECT THE STANDARD WELCOME CENTER/WEIGH STATION EXIT DIRECTION SIGN.

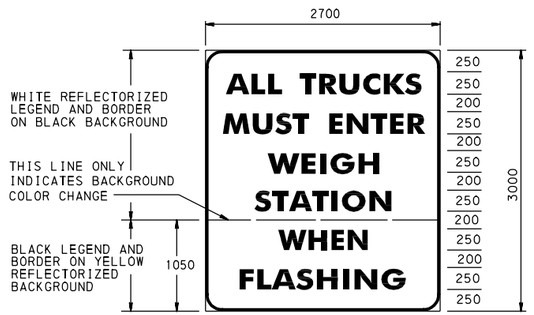

250 mm SERIES D LEGEND

278	296	864	686	913	553
260--A	255--M	270--W	219--S	270--W	203--F
203--L	230--U	203--E	171--T	230--H	171--L
155--L	219--S	99--I	228--A	203--E	260--A
250	155--T	230--G	203--T	171--N	230--S
203--T	250	171--H	99--I	913	230--H
230--R	203--E	863	238--O	2700	99--I
230--U	219--N	2700	171--N		230--N
219--C	203--T		685		171--G
223--K	203--E		2700		553
171--S	171--R				2700
278	296				
2700	2700				

NOTES:

1. DEFINITION: USE INDICATED SIGNING FOR WELCOME CENTERS THAT ARE OFFICIALLY RECOGNIZED BY THE PA DEPARTMENT OF TRANSPORTATION.
2. DISTANCE: USE DISTANCE FROM THEORETICAL GORE FOR DISTANCE INDICATED ON SIGNS.
3. COLOR: USE BLUE REFLECTORIZED BACKGROUND WITH WHITE REFLECTORIZED DIRECT APPLIED LEGEND AND BORDER, UNLESS OTHERWISE NOTED.
4. BORDERS: USE 50 mm WIDE BORDER WITH 300 mm CORNER RADII, UNLESS OTHERWISE NOTED.
5. LEGEND AND SIGN WIDTH: UNLESS OTHERWISE NOTED, USE 300 mm SERIES D UPPER CASE FOR LEGEND, AND 375 mm SERIES D FOR DIGITS. SEE TC-8700C FOR LAYOUTS OF ARROWS AND FRACTIONS, AND FOR DETERMINING SIGN WIDTHS.
6. POSTS: USE POSTS OF AN APPROVED BREAKAWAY DESIGN, EITHER STEEL (TC-8702A OR TC-8702B) OR WOOD (TC-8702E).
7. A4-1 SIGN: USE ONLY WHEN SEPARATE PARKING AREAS ARE PROVIDED.
8. MINIMUM SIGN SPACING: MAINTAIN 240 m MINIMUM SPACING FOR ALL SIGNS PRIOR TO DECELERATION LANE.
9. VENDING MACHINES SIGN (D5-6-2): USE IF VENDING MACHINES ARE AVAILABLE. SEE PUBLICATION 236M FOR LAYOUT. IF A FOLDING SIGN IS USED, IT MAY ALSO BE MOUNTED BELOW THE MAIN SIGN, PROVIDED PROPER SIGN HEIGHT IS MAINTAINED AND THE BREAKAWAY FEATURE OF THE POSTS IS UNAFFECTED.
10. FREE RESERVATION SERVICE: USE IF RESERVATION SERVICE IS AVAILABLE. SEE PUBLICATION 236M FOR LAYOUT. SEE NOTE 9 CONCERNING ALTERNATE LOCATION FOR FOLDING SIGNS.
11. NEXT REST AREA SUPPLEMENTAL SIGN: THIS SIGN MAY BE ELIMINATED IF SUFFICIENT SIGN SPACING DOES NOT EXIST. WHEN THIS SIGN IS ELIMINATED, ONLY THEN INSTALL "NEXT REST AREA -- MILES" SUPPLEMENTAL PLAQUE UNDER SECOND ADVANCE SIGN. SEE TC-8701R FOR SIGN FABRICATION DETAILS.
12. ALL DIMENSIONS ARE IN MILLIMETERS UNLESS OTHERWISE NOTED.

METRIC UNITS

COMMONWEALTH OF PENNSYLVANIA
DEPARTMENT OF TRANSPORTATION
BUREAU OF HIGHWAY SAFETY AND TRAFFIC ENGINEERING

FREEWAY AND EXPRESSWAY ADVANCE SIGNING

WELCOME CENTERS

RECOMMENDED MAY 25, 2007
Glenn C Rowe
CHIEF, TRAFFIC ENGINEERING AND OPERATIONS DIVISION

RECOMMENDED MAY 25, 2007
M C Patel
CHIEF HIGHWAY ENGINEER

SHT. 1 OF 2

TC-8701W

A4-1

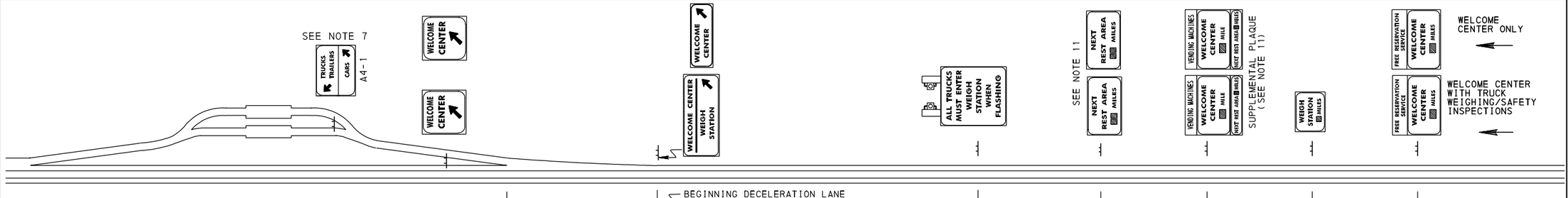

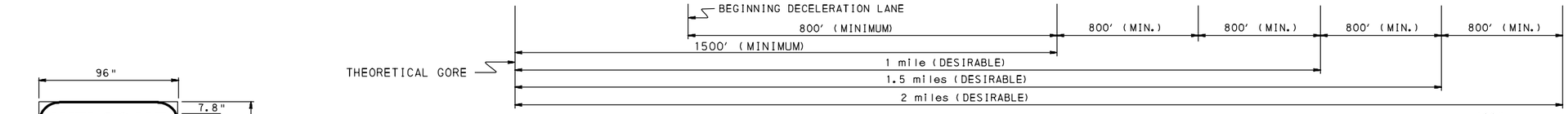

TYPE N ARROW

11.5	19.3	36.6
12.8--W	10.3--C	22.8--ARROW
9.6--E	9.6--E	36.6
9.6--L	10.3--N	96.0"
10.3--C	9.6--T	
11.3--O	9.6--E	
12.1--M	8.1--R	
7.3--E	19.2	
11.5	96.0"	
96.0"		

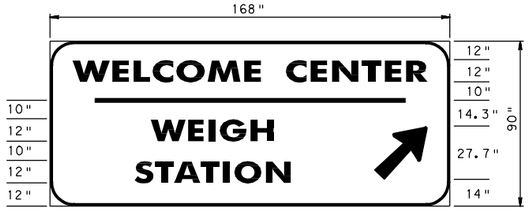

2" BAR TYPE G ARROW

12.8	18.0	41.1	32.7
12.8--W	132.0--(BAR	12.8--W	10.3--S
9.6--E	18.0 LENGTH)	9.6--E	8.1--T
9.6--L	168.0"	4.7--I	10.8--A
10.3--C		10.9--G	9.6--T
11.3--O		8.1--H	4.7--I
12.1--M		41.1	11.3--O
7.3--E		27.7--ARROW	8.1--N
12.0		12.0	32.7
10.3--C		168.0"	27.7--ARROW
9.6--E			12.0
10.3--N			168.0"
9.6--T			
9.6--E			
8.1--R			
12.7			
168.0"			

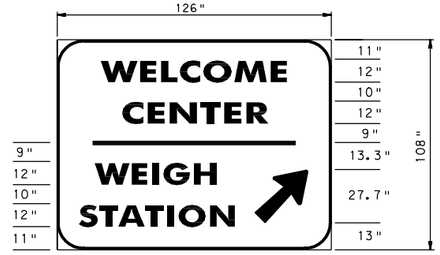

50 mm BAR TYPE G ARROW

26.5	34.3	19.0	20.1	11.7
12.8--W	10.3--C	88.0--(BAR	12.8--W	10.3--S
9.6--E	9.6--E	19.0 LENGTH)	9.6--E	8.1--T
9.6--L	10.3--N	126.0"	4.7--I	10.8--A
10.3--C	9.6--T		10.9--G	9.6--T
11.3--O	9.6--E		8.1--H	4.7--I
12.1--M	8.1--R		20.1	11.3--O
7.3--E	34.2		27.7--ARROW	8.1--N
26.5	126.0"		12.0	11.7
126.0"			126.0"	27.7--ARROW
				12.0
				126.0"

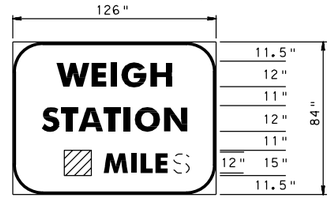

40.0	31.6	--	--	
12.8--W	10.3--S			
9.6--E	8.1--T	18.0		18.0
4.7--I	10.8--A	12.1--M	OR	12.1--M
10.9--G	9.6--T	4.7--I		4.7--I
8.1--H	4.7--I	9.6--L		9.6--L
39.9	11.3--O	7.3--E		9.6--E
126.0"	8.1--N			8.1--S
	31.5			
	126.0"			

26.5	34.3	--	--	
12.8--W	10.3--C			
9.6--E	9.6--E	18.0		18.0
9.6--L	10.3--N	12.1--M	OR	12.1--M
10.3--C	9.6--T	4.7--I		4.7--I
11.3--O	9.6--E	9.6--L		9.6--L
12.1--M	8.1--R	7.3--E		9.6--E
7.3--E	34.2			8.1--S
26.5	126.0"			
126.0"				

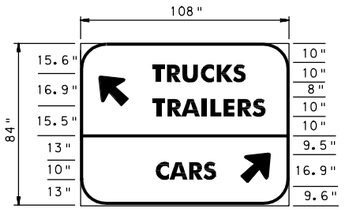

2" BAR 10" SERIES D LEGEND TYPE B ARROWS

9.6	9.6	36.5
16.9--ARROW	16.9--ARROW	8.0--C
10.0	10.0	10.2--A
8.0--T	8.0--T	8.6--R
9.1--R	8.6--R	6.7--S
9.1--U	10.2--A	11.5
8.6--C	3.9--I	16.9--ARROW
8.8--K	8.0--L	9.6
6.7--S	8.0--E	108.0"
21.2	8.6--R	
108.0"	6.7--S	
	9.5	
	108.0"	

TYPE G ARROW

12.7	20.4
12.8--W	10.3--C
9.6--E	9.6--E
9.6--L	10.3--N
10.3--C	9.6--T
11.3--O	9.6--E
12.1--M	8.1--R
7.3--E	20.4
27.7--ARROW	27.7--ARROW
12.0	12.0
138.0"	138.0"

ALTERNATE WELCOME CENTER/WEIGH STATION EXIT DIRECTION SIGN

NOTE:
THIS SIGN MAY BE USED ONLY IF INSUFFICIENT WIDTH IS AVAILABLE TO ERECT THE STANDARD WELCOME CENTER/WEIGH STATION EXIT DIRECTION SIGN.

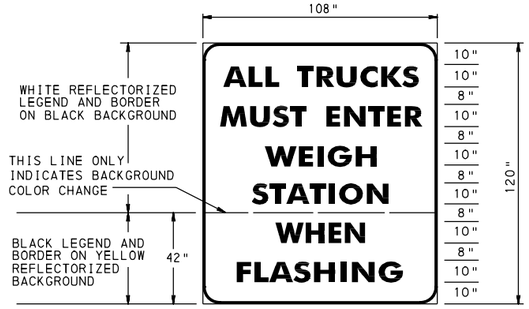

10" SERIES D LEGEND

11.7	12.4	34.9	27.9	36.8	22.6
10.2--A	10.1--M	10.6--W	8.6--S	10.6--W	8.0--F
8.0--L	9.1--U	8.0--E	6.7--T	9.1--H	6.7--L
6.1--L	8.6--S	3.9--I	9.0--A	8.0--E	10.2--A
10.0	6.1--T	9.1--G	8.0--T	6.7--N	9.1--S
8.0--T	10.0	6.7--H	3.9--I	36.8	9.1--H
9.1--R	8.0--E	34.8	9.4--O	108.0"	3.9--I
9.1--U	8.6--N	108.0"	6.7--N		9.1--N
8.6--C	8.0--T		27.8		6.7--G
8.8--K	8.0--E		108.0"		22.6
6.7--S	6.7--R				108.0"
11.7	12.4				
108.0"	108.0"				

NOTES:

1. DEFINITION: USE INDICATED SIGNING FOR WELCOME CENTERS THAT ARE OFFICIALLY RECOGNIZED BY THE PA DEPARTMENT OF TRANSPORTATION.
2. DISTANCE: USE DISTANCE FROM THEORETICAL GORE FOR DISTANCE INDICATED ON SIGNS.
3. COLOR: USE BLUE REFLECTORIZED BACKGROUND WITH WHITE REFLECTORIZED DIRECT APPLIED LEGEND AND BORDER, UNLESS OTHERWISE NOTED.
4. BORDERS: USE 2" WIDE BORDER WITH 12" CORNER RADII, UNLESS OTHERWISE NOTED.
5. LEGEND AND SIGN WIDTH: UNLESS OTHERWISE NOTED, USE 12" SERIES D UPPER CASE FOR LEGEND, AND 15" SERIES D FOR DIGITS. SEE TC-8700C FOR LAYOUTS OF ARROWS AND FRACTIONS, AND FOR DETERMINING SIGN WIDTHS.
6. POSTS: USE POSTS OF AN APPROVED BREAKAWAY DESIGN, EITHER STEEL (TC-8702A OR TC-8702B) OR WOOD (TC-8702E).
7. A4-1 SIGN: USE ONLY WHEN SEPARATE PARKING AREAS ARE PROVIDED.
8. MINIMUM SIGN SPACING: MAINTAIN 800' MINIMUM SPACING FOR ALL SIGNS PRIOR TO DECELERATION LANE.
9. VENDING MACHINES SIGN (D5-6-2): USE IF VENDING MACHINES ARE AVAILABLE. SEE PUBLICATION 236M FOR LAYOUT. IF A FOLDING SIGN IS USED, IT MAY ALSO BE MOUNTED BELOW THE MAIN SIGN, PROVIDED PROPER SIGN HEIGHT IS MAINTAINED AND THE BREAKAWAY FEATURE OF THE POSTS IS UNAFFECTED.
10. FREE RESERVATION SERVICE: USE IF RESERVATION SERVICE IS AVAILABLE. SEE PUBLICATION 236M FOR LAYOUT. SEE NOTE 9 CONCERNING ALTERNATE LOCATION FOR FOLDING SIGNS.
11. NEXT REST AREA SUPPLEMENTAL SIGN: THIS SIGN MAY BE ELIMINATED IF SUFFICIENT SIGN SPACING DOES NOT EXIST. WHEN THIS SIGN IS ELIMINATED, ONLY THEN INSTALL "NEXT REST AREA -- MILES" SUPPLEMENTAL PLAQUE UNDER SECOND ADVANCE SIGN. SEE TC-8701R FOR SIGN FABRICATION DETAILS.
12. ALL DIMENSIONS ARE IN INCHES UNLESS OTHERWISE NOTED.

ENGLISH UNITS

COMMONWEALTH OF PENNSYLVANIA
DEPARTMENT OF TRANSPORTATION
BUREAU OF HIGHWAY SAFETY AND TRAFFIC ENGINEERING

FREEWAY AND EXPRESSWAY ADVANCE SIGNING

WELCOME CENTERS

RECOMMENDED MAY 25, 2007
Glen C Rowe
CHIEF, TRAFFIC ENGINEERING AND OPERATIONS DIVISION

RECOMMENDED MAY 25, 2007
M. C. Patel
CHIEF HIGHWAY ENGINEER

SHT. 2 OF 2

TC-8701W

A4-1

DESIGN CRITERIA:

1. DESIGN BASED ON 2001 AASHTO STANDARD SPECIFICATIONS FOR STRUCTURAL SUPPORTS FOR HIGHWAY SIGNS, LUMINAIRES AND TRAFFIC SIGNALS INCLUDING 2002 INTERIM SPECIFICATIONS WITH THE FOLLOWING DESIGN CRITERIA:

   - BASIC WIND SPEED (V) = 40 m/sec (90 MPH) (3-SECOND GUST)
   - WIND IMPORTANCE FACTOR (I_r) = 0.71 (10 YEAR DESIGN LIFE)
   - BENDING COEFFICIENT (C_b) = 1.30
   - FATIGUE IS NOT CONSIDERED FOR ROADSIDE SIGNS.

2. EMBEDMENT OF FOOTINGS IS BASED ON BROMS' METHOD OUTLINED IN THE AASHTO SPECIFICATIONS. SEE SHEET 8 FOR SOIL PROPERTIES.

3. MINIMUM POST HEIGHT BETWEEN GROUND LEVEL AND BOTTOM OF SIGN WILL BE 7 FT. WHENEVER THE POST IS LOCATED IN THE CLEAR ZONE AS DEFINED IN PUBLICATION 13M.

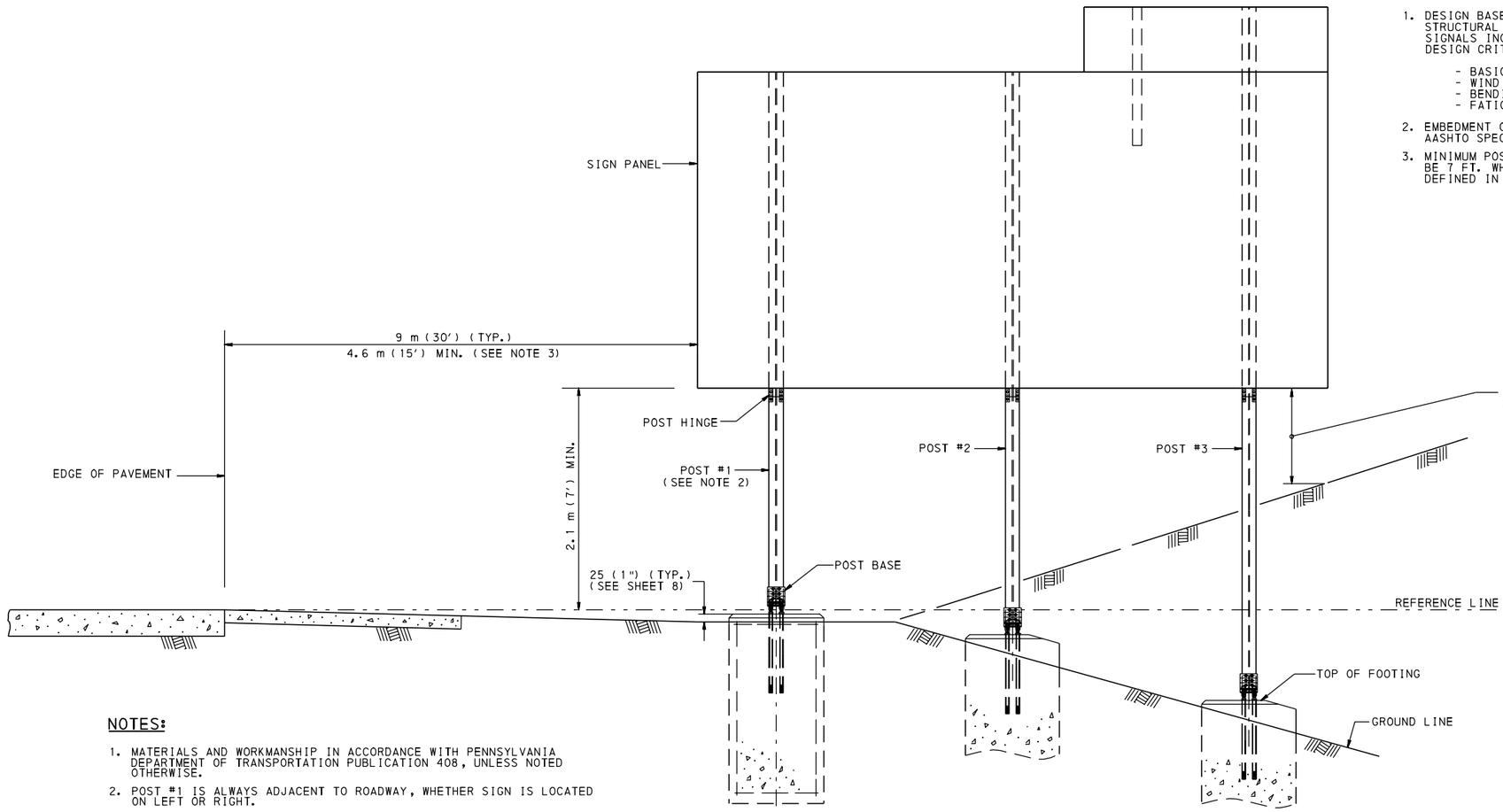

SIGN ELEVATION

NOTES:

1. MATERIALS AND WORKMANSHIP IN ACCORDANCE WITH PENNSYLVANIA DEPARTMENT OF TRANSPORTATION PUBLICATION 408, UNLESS NOTED OTHERWISE.
2. POST #1 IS ALWAYS ADJACENT TO ROADWAY, WHETHER SIGN IS LOCATED ON LEFT OR RIGHT.
3. AT LOCATIONS WITH UNMOUNTABLE CURB, GUIDE RAIL OR BARRIER, PLACE THE NEAR EDGE OF THE SIGN AT LEAST 0.6 m (2') BEHIND THE CURB FACE, GUIDE RAIL OR BARRIER. AT LOCATIONS WITH GUIDE RAIL OR BARRIER, IT IS DESIRABLE TO PLACE POST #1 BEYOND THE DEFLECTION DISTANCE OF THE GUIDE RAIL OR BARRIER. PRIOR TO FABRICATION, DETERMINE ACTUAL LATERAL PLACEMENT IN THE FIELD WITH THE APPROVAL OF THE ENGINEER.
4. LOCATE SIGNS TO AVOID PLACING SUPPORTS IN DRAINAGE DITCHES.
5. MOUNT ALL SIGN PANELS ABOVE POST HINGES.
6. FOR SELECTION OF POSTS, REFER TO POST SELECTION TABLES ON SHEETS 2 THROUGH 4.
7. FOR POST BASE AND HINGE DETAILS, REFER TO SHEET 5.
8. FOR SELECTION OF FOOTING SIZE AND REINFORCEMENT, REFER TO FOOTING SELECTION TABLE ON SHEET 8.
9. FOR DETAIL OF SIGN PANELS AND ATTACHMENT HARDWARE, SEE TRAFFIC STANDARD TC-8701E OR TC-8701S.
10. ALL DIMENSIONS ARE IN MILLIMETERS UNLESS OTHERWISE NOTED. ENGLISH UNITS IN PARENTHESIS ( ).
11. EITHER ALL METRIC OR ALL ENGLISH UNITS MUST BE USED ON PLANS. METRIC AND ENGLISH UNITS SHOWN MAY NOT BE MIXED.

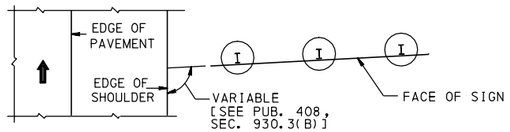

PLAN VIEW

COMMONWEALTH OF PENNSYLVANIA
DEPARTMENT OF TRANSPORTATION
BUREAU OF HIGHWAY SAFETY AND TRAFFIC ENGINEERING

POST-MOUNTED SIGNS, TYPE A

ERECTION DETAILS

RECOMMENDED MAY 25, 2007 Glenn C Rowe CHIEF, TRAFFIC ENGINEERING AND OPERATIONS DIVISION	RECOMMENDED MAY 25, 2007 M. C. Patel CHIEF HIGHWAY ENGINEER	SHT. 1 OF 8 TC-8702A

POST SELECTION TABLE - TWO POSTS

W m (FT)	L_B m (FT)	HEIGHT "H" IN m (FT)															
		1.220 (4′)	1.525 (5′)	1.830 (6′)	2.135 (7′)	2.440 (8′)	2.745 (9′)	3.050 (10′)	3.355 (11′)	3.660 (12′)	3.965 (13′)	4.270 (14′)	4.575 (15′)	4.880 (16′)	5.185 (17′)	5.490 (18′)	5.795 (19′)
1.8 (6′)	2.1 (7′)	P1	P1	P1	P1	P1	P1	P1	P2	P2	P3	P3	P3	P3	P3	-	-
	2.4 (8′)	P1	P1	P1	P1	P1	P1	P2	P2	P2	P3	P3	P3	P3	-	-	-
	2.7 (9′)	P1	P1	P1	P1	P1	P2	P2	P2	P3	P3	P3	P3	-	-	-	-
	3.0 (10′)	P1	P1	P1	P1	P2	P2	P2	P3	P3	P3	P3	-	-	-	-	-
	3.3 (11′)	P1	P1	P1	P1	P2	P2	P3	P3	P3	P3	-	-	-	-	-	-
	3.6 (12′)	P1	P1	P1	P2	P2	P3	P3	P3	P3	-	-	-	-	-	-	-
	3.9 (13′)	P1	P1	P1	P2	P2	P3	P3	P3	P3	-	-	-	-	-	-	-
	4.2 (14′)	P1	P1	P2	P2	P3	P3	P3	P3	-	-	-	-	-	-	-	-
	4.5 (15′)	P1	P2	P2	P2	P3	P3	P3	-	-	-	-	-	-	-	-	-
	4.8 (16′)	P1	P2	P2	P3	P3	P3	P3	-	-	-	-	-	-	-	-	-
	5.1 (17′)	P2	P2	P2	P3	P3	P3	-	-	-	-	-	-	-	-	-	-
2.1 (7′)	2.1 (7′)	P1	P1	P1	P1	P1	P1	P2	P2	P2	P3	P3	P3	P3	P3	-	-
	2.4 (8′)	P1	P1	P1	P1	P1	P2	P2	P2	P3	P3	P3	P3	-	-	-	-
	2.7 (9′)	P1	P1	P1	P1	P2	P2	P2	P3	P3	P3	P3	-	-	-	-	-
	3.0 (10′)	P1	P1	P1	P1	P2	P2	P3	P3	P3	P3	-	-	-	-	-	-
	3.3 (11′)	P1	P1	P1	P2	P2	P2	P3	P3	P3	-	-	-	-	-	-	-
	3.6 (12′)	P1	P1	P1	P2	P2	P3	P3	P3	-	-	-	-	-	-	-	-
	3.9 (13′)	P1	P1	P2	P2	P3	P3	P3	P3	-	-	-	-	-	-	-	-
	4.2 (14′)	P1	P2	P2	P2	P3	P3	P3	-	-	-	-	-	-	-	-	-
	4.5 (15′)	P1	P2	P2	P3	P3	P3	-	-	-	-	-	-	-	-	-	-
	4.8 (16′)	P2	P2	P3	P3	P3	P3	-	-	-	-	-	-	-	-	-	-
	5.1 (17′)	P2	P2	P3	P3	P3	-	-	-	-	-	-	-	-	-	-	-
2.4 (8′)	2.1 (7′)	P1	P1	P1	P1	P1	P2	P2	P2	P3	P3	P3	P3	-	-	-	-
	2.4 (8′)	P1	P1	P1	P1	P1	P2	P2	P3	P3	P3	P3	-	-	-	-	-
	2.7 (9′)	P1	P1	P1	P1	P2	P2	P3	P3	P3	P3	-	-	-	-	-	-
	3.0 (10′)	P1	P1	P1	P2	P2	P2	P3	P3	P3	-	-	-	-	-	-	-
	3.3 (11′)	P1	P1	P1	P2	P2	P3	P3	P3	-	-	-	-	-	-	-	-
	3.6 (12′)	P1	P1	P2	P2	P3	P3	P3	P3	-	-	-	-	-	-	-	-
	3.9 (13′)	P1	P1	P2	P3	P3	P3	P3	-	-	-	-	-	-	-	-	-
	4.2 (14′)	P1	P2	P2	P3	P3	P3	-	-	-	-	-	-	-	-	-	-
	4.5 (15′)	P2	P2	P3	P3	P3	P3	-	-	-	-	-	-	-	-	-	-
	4.8 (16′)	P2	P2	P3	P3	P3	-	-	-	-	-	-	-	-	-	-	-
	5.1 (17′)	P2	P3	P3	P3	P3	-	-	-	-	-	-	-	-	-	-	-
2.7 (9′)	2.1 (7′)	P1	P1	P1	P1	P1	P2	P2	P3	P3	P3	P3	P4 *	P4 *	P5 *	P5 *	P7 *
	2.4 (8′)	P1	P1	P1	P1	P2	P2	P3	P3	P3	P3	P4 *	P4 *	P5 *	P5 *	P7 *	P7 *
	2.7 (9′)	P1	P1	P1	P2	P2	P2	P3	P3	P3	P4 *	P4 *	P5 *	P5 *	P7 *	P7 *	P7 *
	3.0 (10′)	P1	P1	P1	P2	P2	P3	P3	P3	P3	P4 *	P5 *	P5 *	P7 *	P7 *	P7 *	P8 *
	3.3 (11′)	P1	P1	P2	P2	P3	P3	P3	P3	P4 *	P5 *	P5 *	P5 *	P7 *	P7 *	P7 *	P8 *
	3.6 (12′)	P1	P1	P2	P2	P3	P3	P3	P4 *	P5 *	P5 *	P5 *	P7 *	P7 *	P7 *	P8 *	P10 *
	3.9 (13′)	P1	P2	P2	P3	P3	P3	P4 *	P4 *	P5 *	P5 *	P7 *	P7 *	P8 *	P8 *	P9 *	P10 *
	4.2 (14′)	P1	P2	P3	P3	P3	P3	P4 *	P5 *	P5 *	P6 *	P7 *	P7 *	P8 *	P8 *	P10 *	P10 *
	4.5 (15′)	P2	P2	P3	P3	P3	P4 *	P5 *	P5 *	P5 *	P7 *	P7 *	P7 *	P8 *	P10 *	P10 *	P10 *
	4.8 (16′)	P2	P3	P3	P3	P4 *	P4 *	P5 *	P5 *	P6 *	P7 *	P7 *	P8 *	P8 *	-	-	-
	5.1 (17′)	P2	P3	P3	P3	P4 *	P5 *	P5 *	P6 *	P7 *	P7 *	P7 *	P8 *	P8 *	-	-	-
3.0 (10′)	2.1 (7′)	P1	P1	P1	P1	P2	P2	P2	P3	P3	P3	P3	P4 *	P4 *	P5 *	P5 *	P6 *
	2.4 (8′)	P1	P1	P1	P1	P2	P2	P3	P3	P3	P3	P3	P4 *	P5 *	P5 *	P7 *	P7 *
	2.7 (9′)	P1	P1	P1	P2	P2	P3	P3	P3	P3	P3	P4 *	P5 *	P5 *	P7 *	P7 *	P7 *
	3.0 (10′)	P1	P1	P2	P2	P2	P3	P3	P3	P3	P4 *	P5 *	P5 *	P7 *	P7 *	P7 *	P8 *
	3.3 (11′)	P1	P1	P2	P2	P3	P3	P3	P3	P4 *	P5 *	P5 *	P5 *	P7 *	P7 *	P7 *	P8 *
	3.6 (12′)	P1	P1	P2	P2	P3	P3	P3	P4 *	P5 *	P5 *	P5 *	P7 *	P7 *	P7 *	P8 *	P10 *
	3.9 (13′)	P1	P2	P2	P3	P3	P3	P4 *	P5 *	P5 *	P6 *	P7 *	P7 *	P8 *	P8 *	P10 *	P10 *
	4.2 (14′)	P2	P2	P3	P3	P3	P4 *	P5 *	P5 *	P5 *	P7 *	P7 *	P7 *	P8 *	P10 *	P10 *	P10 *
	4.5 (15′)	P2	P2	P3	P3	P4 *	P5 *	P5 *	P5 *	P7 *	P7 *	P7 *	P8 *	P10 *	P10 *	P10 *	P10 *
	4.8 (16′)	P2	P3	P3	P3	P4 *	P5 *	P5 *	P6 *	P7 *	P7 *	P8 *	P9 *	-	-	-	-
	5.1 (17′)	P2	P3	P3	P4 *	P4 *	P5 *	P5 *	P7 *	P7 *	P7 *	P8 *	-	-	-	-	-
3.3 (11′)	2.1 (7′)	P1	P1	P1	P1	P2	P2	P3	P3	P3	P3	P4 *	P5 *	P5 *	P6 *	P7 *	P7 *
	2.4 (8′)	P1	P1	P1	P2	P2	P2	P3	P3	P3	P4 *	P5 *	P5 *	P5 *	P7 *	P7 *	P8 *
	2.7 (9′)	P1	P1	P1	P2	P2	P3	P3	P3	P4 *	P4 *	P5 *	P5 *	P7 *	P7 *	P7 *	P8 *
	3.0 (10′)	P1	P1	P2	P2	P3	P3	P3	P3	P4 *	P5 *	P5 *	P7 *	P7 *	P7 *	P8 *	P10 *
	3.3 (11′)	P1	P2	P2	P2	P3	P3	P3	P4 *	P5 *	P5 *	P5 *	P7 *	P7 *	P8 *	P9 *	P10 *
	3.6 (12′)	P1	P2	P2	P3	P3	P3	P4 *	P5 *	P5 *	P6 *	P7 *	P7 *	P8 *	P9 *	P10 *	P10 *
	3.9 (13′)	P1	P2	P2	P3	P3	P4 *	P5 *	P5 *	P5 *	P7 *	P7 *	P7 *	P8 *	P10 *	P10 *	P10 *
	4.2 (14′)	P2	P2	P3	P3	P3	P4 *	P5 *	P5 *	P7 *	P7 *	P7 *	P8 *	P10 *	P10 *	P10 *	P10 *
	4.5 (15′)	P2	P3	P3	P3	P4 *	P5 *	P5 *	P5 *	P7 *	P7 *	P8 *	P9 *	P10 *	P10 *	P10 *	-
	4.8 (16′)	P2	P3	P3	P4 *	P4 *	P5 *	P5 *	P5 *	P7 *	P7 *	P8 *	-	-	-	-	-
	5.1 (17′)	P3	P3	P3	P4 *	P5 *	P5 *	P7 *	P7 *	P7 *	P8 *	-	-	-	-	-	-
3.6 (12′)	2.1 (7′)	P1	P1	P1	P1	P2	P2	P3	P3	P3	P4	P4	P5	P6	P7	P7	P7
	2.4 (8′)	P1	P1	P1	P2	P2	P3	P3	P3	P3	P4	P5	P5	P7	P7	P7	P8
	2.7 (9′)	P1	P1	P2	P2	P3	P3	P3	P3	P4	P5	P5	P7	P7	P7	P8	P10
	3.0 (10′)	P1	P1	P2	P2	P3	P3	P3	P4	P4	P5	P7	P7	P7	P8	P9	P10
	3.3 (11′)	P1	P2	P2	P3	P3	P3	P4	P5	P5	P5	P7	P7	P8	P8	P10	P10
	3.6 (12′)	P1	P2	P2	P3	P3	P4	P4	P5	P5	P7	P7	P7	P8	P10	P10	P10
	3.9 (13′)	P2	P2	P3	P3	P3	P4	P5	P5	P5	P7	P7	P8	P10	P10	P10	-
	4.2 (14′)	P2	P3	P3	P3	P4	P5	P5	P5	P7	P8	P9	P10	P10	P10	-	-
	4.5 (15′)	P2	P3	P3	P4	P5	P5	P7	P7	P7	P8	P10	P10	P10	-	-	-
	4.8 (16′)	P3	P3	P3	P4	P5	P5	P7	P7	P8	P8	-	-	-	-	-	-
	5.1 (17′)	P3	P3	P4	P5	P5	P7	P7	P7	P8	-	-	-	-	-	-	-
3.9 (13′)	2.1 (7′)	P1	P1	P1	P2	P2	P3	P3	P3	P3	P4	P4	P5	P6	P6	P7	P7	P8
	2.4 (8′)	P1	P1	P1	P2	P2	P3	P3	P3	P4	P4	P5	P6	P7	P7	P8	P9
	2.7 (9′)	P1	P1	P2	P2	P3	P3	P3	P4	P4	P5	P5	P7	P7	P8	P9	P10
	3.0 (10′)	P1	P2	P2	P2	P3	P3	P3	P4	P5	P5	P7	P7	P7	P8	P10	P10
	3.3 (11′)	P1	P2	P2	P3	P3	P3	P4	P5	P5	P7	P7	P7	P8	P10	P10	P10
	3.6 (12′)	P1	P2	P3	P3	P3	P4	P5	P5	P7	P7	P7	P8	P10	P10	P10	P10
	3.9 (13′)	P2	P2	P3	P3	P4	P4	P5	P5	P7	P7	P8	P9	P10	P10	P10	-
	4.2 (14′)	P2	P3	P3	P3	P4	P5	P5	P7	P7	P7	P8	P10	P10	P10	-	-
	4.5 (15′)	P2	P3	P3	P4	P5	P6	P7	P7	P8	P10	P10	P10	P10	-	-	-
	4.8 (16′)	P3	P3	P3	P4	P5	P5	P7	P7	P8	P8	-	-	-	-	-	-
	5.1 (17′)	P3	P3	P4	P5	P5	P7	P7	P7	P8	-	-	-	-	-	-	-
4.2 (14′)	2.1 (7′)	P1	P1	P1	P2	P2	P3	P3	P3	P4	P4	P5	P6	P7	P7	P7	P9
	2.4 (8′)	P1	P1	P2	P2	P3	P3	P3	P4	P5	P5	P7	P7	P7	P8	P10	P10
	2.7 (9′)	P1	P1	P2	P2	P3	P3	P3	P4	P5	P5	P7	P7	P8	P10	P10	P10
	3.0 (10′)	P1	P2	P2	P3	P3	P3	P4	P4	P5	P7	P7	P7	P8	P10	P10	P10
	3.3 (11′)	P1	P2	P2	P3	P3	P3	P4	P5	P5	P7	P7	P8	P9	P10	P10	P10
	3.6 (12′)	P2	P2	P3	P3	P3	P4	P5	P5	P7	P7	P7	P8	P10	P10	P10	-
	3.9 (13′)	P2	P2	P3	P3	P4	P5	P5	P7	P7	P7	P8	P10	P10	P10	-	-
	4.2 (14′)	P2	P3	P3	P4	P4	P5	P5	P7	P7	P8	P8	P10	P10	-	-	-
	4.5 (15′)	P3	P3	P3	P4	P5	P5	P7	P7	P7	P8	P10	P10	P10	-	-	-
	4.8 (16′)	P3	P3	P4	P4	P5	P6	P7	P7	P8	-	-	-	-	-	-	-
	5.1 (17′)	P3	P3	P4	P5	P5	P7	P7	P8	P9	-	-	-	-	-	-	-

* SEE NOTE 6

(TABLE CONTINUED ON SHEET 3)

LEGEND:

P1 = W150 x 14 (W6 x 9)
P2 = W150 x 18 (W6 x 12)
P3 = W150 x 22 (W6 x 15)
P4 = W200 x 27 (W8 x 18)
P5 = W200 x 31 (W8 x 21)
P6 = W250 x 33 (W10 x 22)
P7 = W250 x 39 (W10 x 26)
P8 = W360 x 45 (W14 x 30)
P9 = W460 x 52 (W18 x 35)
P10 = W460 x 60 (W18 x 40)

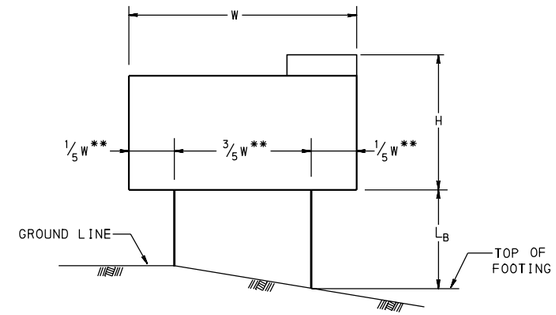

** SEE NOTE 6

SIGN ON TWO POSTS
SKETCH A

POST SELECTION EXAMPLE

FOR A SIGN WHERE
W = 1.8 m (6′)
H = 1.220 m (4′)
L_B = 5.1 m (17′)

TWO P2 = W150 x 18 (W6 x 12) STEEL POSTS ARE REQUIRED.

SIGN POST SELECTION NOTES:

1. DETERMINE VALUES OF "W", "H", AND "L_B" AS INDICATED IN SKETCHES "A" OR "B".
   W = MAXIMUM WIDTH OF SIGN.
   H = MAXIMUM HEIGHT OF SIGN.
   L_B = MAXIMUM DISTANCE BETWEEN TOP OF A FOOTING AND BOTTOM OF SIGN.
2. FOR SELECTION OF POSTS, ENTER TABLES WITH VALUES OF "W", "H" AND "L_B".
3. FOR A SIGN SIZE BETWEEN THOSE VALUES OF "W", "H" AND "L_B" IN THE TABLE, USE NEXT HIGHEST m (FT) VALUE.
4. ALL POSTS ARE ASTM A 572/A 572M, GRADE 345 (GRADE 50) STEEL.
5. USE THE LONGEST POST TO SELECT ALL POST SIZES.
6. POSTS IN THE SELECTION TABLE WITH AN "*" MUST HAVE A MINIMUM CLEAR SPACING OF 2.1 m (7′) BETWEEN POSTS BY INCREASING THE 3/5 W SPACING. THE REMAINING SIGN WIDTH "W" SHOULD BE EQUALLY DISTRIBUTED TO THE OVERHANGS.
7. THERE IS NO NEED TO CHECK THE BELOW WEIGHT CRITERIA FOR POSTS DETERMINED USING THIS POST SELECTION TABLE. NO MORE THAN TWO POSTS MAY BE ERECTED WITHIN A 2.1 m (7′) PATH. A SINGLE POST SPACED WITH A CLEAR DISTANCE OF 2.1 m (7′) OR MORE FROM ANOTHER POST, SHALL HAVE A MASS NO GREATER THAN 65 kg/m (44 LB/FT). THE TOTAL MASS BELOW THE HINGE PLATE, BUT ABOVE THE SHEAR PLATE OF THE BREAKAWAY BASE, SHALL NOT EXCEED 270 kg (600 LB). FOR TWO POSTS SPACED WITH LESS THAN 2.1 m (7′) CLEARANCE, EACH POST SHALL HAVE A MASS LESS THAN 25 kg/m (17 LB/FT).
8. SEE SHEET 4 FOR THREE-POST INSTALLATION.

NOTES:

1. ALL DIMENSIONS ARE IN MILLIMETERS UNLESS OTHERWISE NOTED. ENGLISH UNITS IN PARENTHESIS ( ).
2. EITHER ALL METRIC OR ALL ENGLISH UNITS MUST BE USED ON PLANS. METRIC AND ENGLISH UNITS SHOWN MAY NOT BE MIXED.

COMMONWEALTH OF PENNSYLVANIA
DEPARTMENT OF TRANSPORTATION
BUREAU OF HIGHWAY SAFETY AND TRAFFIC ENGINEERING

POST-MOUNTED SIGNS, TYPE A

POST SELECTION TABLE

RECOMMENDED MAY 25, 2007
Glenn C Rowe
CHIEF, TRAFFIC ENGINEERING AND OPERATIONS DIVISION

RECOMMENDED MAY 25, 2007
M. G. Patel
CHIEF HIGHWAY ENGINEER

SHT. 2 OF 8

TC-8702A

(TABLE CONTINUED FROM SHEET 2)

POST SELECTION TABLE - TWO POSTS																	
W m (FT)	L_B m (FT)	HEIGHT "H" IN m (FT)															
		1.220 (4′)	1.525 (5′)	1.830 (6′)	2.135 (7′)	2.440 (8′)	2.745 (9′)	3.050 (10′)	3.355 (11′)	3.660 (12′)	3.965 (13′)	4.270 (14′)	4.575 (15′)	4.880 (16′)	5.185 (17′)	5.490 (18′)	5.795 (19′)
4.5 (15′)	2.1 (7′)	P1	P1	P1	P2	P2	P3	P3	P3	P4	P5	P6	P6	P7	P7	P8	P10
	2.4 (8′)	P1	P1	P2	P2	P3	P3	P3	P4	P4	P5	P6	P7	P7	P8	P10	P10
	2.7 (9′)	P1	P1	P2	P3	P3	P3	P4	P4	P5	P5	P7	P7	P8	P9	P10	P10
	3.0 (10′)	P1	P2	P2	P3	P3	P3	P4	P5	P5	P7	P7	P7	P8	P10	P10	P10
	3.3 (11′)	P1	P2	P3	P3	P3	P4	P5	P5	P7	P7	P7	P8	P10	P10	P10	-
	3.6 (12′)	P2	P2	P3	P3	P3	P5	P5	P6	P7	P7	P8	P9	P10	P10	-	-
	3.9 (13′)	P2	P3	P3	P3	P4	P5	P5	P7	P7	P8	P9	P10	P10	P10	-	-
	4.2 (14′)	P2	P3	P3	P4	P5	P5	P7	P7	P7	P8	P10	P10	P10	-	-	-
	4.5 (15′)	P3	P3	P3	P4	P5	P5	P7	P7	P8	P10	P10	P10	-	-	-	-
	4.8 (16′)	P3	P3	P4	P5	P5	P7	P7	P8	P9	-	-	-	-	-	-	-
	5.1 (17′)	P3	P3	P4	P5	P5	P7	P7	P8	-	-	-	-	-	-	-	-
4.8 (16′)	2.1 (7′)	P1	P1	P1	P2	P2	P3	P3	P3	P4	P5	P6	P7	P7	P7	P8	P10
	2.4 (8′)	P1	P1	P2	P2	P3	P3	P3	P4	P5	P5	P6	P7	P7	P8	P10	P10
	2.7 (9′)	P1	P2	P2	P3	P3	P3	P4	P5	P5	P5	P7	P7	P8	P10	P10	P10
	3.0 (10′)	P1	P2	P2	P3	P3	P4	P4	P5	P5	P7	P7	P8	P9	P10	P10	-
	3.3 (11′)	P2	P2	P3	P3	P3	P4	P5	P5	P7	P7	P8	P9	P10	P10	P10	-
	3.6 (12′)	P2	P2	P3	P3	P4	P5	P5	P7	P7	P7	P8	P10	P10	P10	-	-
	3.9 (13′)	P2	P3	P3	P4	P4	P5	P6	P7	P7	P8	P10	P10	P10	-	-	-
	4.2 (14′)	P2	P3	P3	P4	P5	P5	P7	P7	P8	P9	P10	P10	P10	-	-	-
	4.5 (15′)	P3	P3	P4	P5	P5	P7	P7	P7	P8	P10	P10	P10	-	-	-	-
	4.8 (16′)	P3	P3	P4	P5	P5	P7	P7	P8	-	-	-	-	-	-	-	-
	5.1 (17′)	P3	P4	P5	P5	P7	P7	P8	P9	-	-	-	-	-	-	-	-
5.1 (17′)	2.1 (7′)	P1	P1	P2	P2	P3	P3	P3	P4	P4	P5	P6	P7	P7	P7	P8	P10
	2.4 (8′)	P1	P1	P2	P2	P3	P3	P3	P4	P5	P5	P7	P7	P7	P8	P10	P10
	2.7 (9′)	P1	P2	P2	P3	P3	P3	P4	P5	P5	P5	P7	P7	P8	P9	P10	P10
	3.0 (10′)	P1	P2	P3	P3	P3	P4	P5	P5	P5	P7	P7	P8	P10	P10	P10	-
	3.3 (11′)	P2	P2	P3	P3	P3	P4	P5	P6	P7	P7	P8	P10	P10	P10	-	-
	3.6 (12′)	P2	P3	P3	P3	P4	P5	P5	P7	P7	P8	P10	P10	P10	P10	-	-
	3.9 (13′)	P2	P3	P3	P4	P5	P5	P7	P7	P8	P10	P10	P10	P10	-	-	-
	4.2 (14′)	P2	P3	P3	P4	P5	P7	P7	P8	P10	P10	P10	P10	-	-	-	-
	4.5 (15′)	P3	P3	P4	P5	P5	P7	P7	P8	P10	P10	P10	-	-	-	-	-
	4.8 (16′)	P3	P4	P5	P5	P7	P7	P8	-	-	-	-	-	-	-	-	-
	5.1 (17′)	P3	P4	P5	P5	P7	P7	P8	-	-	-	-	-	-	-	-	-
5.4 (18′)	2.1 (7′)	P1	P1	P2	P2	P3	P3	P3	P4	P5	P6	P6	P7	P7	P8	P9	P10
	2.4 (8′)	P1	P1	P2	P3	P3	P3	P4	P4	P5	P6	P7	P7	P8	P10	P10	P10
	2.7 (9′)	P1	P2	P2	P3	P3	P3	P4	P5	P5	P7	P7	P8	P10	P10	P10	-
	3.0 (10′)	P1	P2	P3	P3	P3	P4	P5	P5	P7	P7	P8	P10	P10	P10	P10	-
	3.3 (11′)	P2	P2	P3	P3	P4	P4	P5	P7	P7	P7	P9	P10	P10	P10	-	-
	3.6 (12′)	P2	P3	P3	P3	P4	P5	P6	P7	P7	P8	P10	P10	P10	-	-	-
	3.9 (13′)	P2	P3	P3	P4	P5	P5	P7	P7	P8	P10	P10	P10	-	-	-	-
	4.2 (14′)	P3	P3	P4	P5	P5	P7	P7	P7	P9	P10	P10	-	-	-	-	-
	4.5 (15′)	P3	P3	P4	P5	P5	P7	P7	P8	P10	P10	P10	-	-	-	-	-
	4.8 (16′)	P3	P4	P5	P5	P7	P7	P8	-	-	-	-	-	-	-	-	-
	5.1 (17′)	P3	P4	P5	P5	P7	P7	P8	-	-	-	-	-	-	-	-	-
5.7 (19′)	2.1 (7′)	P1	P1	P2	P2	P3	P3	P3	P4	P5	P6	P7	P7	P7	P8	P10	P10
	2.4 (8′)	P1	P2	P2	P3	P3	P3	P4	P5	P5	P7	P7	P7	P8	P10	P10	P10
	2.7 (9′)	P1	P2	P2	P3	P3	P4	P4	P5	P5	P7	P7	P8	P10	P10	P10	-
	3.0 (10′)	P2	P2	P3	P3	P3	P4	P5	P5	P7	P7	P8	P10	P10	P10	-	-
	3.3 (11′)	P2	P2	P3	P3	P4	P5	P5	P7	P7	P8	P10	P10	P10	-	-	-
	3.6 (12′)	P2	P3	P3	P4	P4	P5	P7	P7	P8	P9	P10	P10	-	-	-	-
	3.9 (13′)	P2	P3	P3	P4	P5	P6	P7	P7	P8	P10	P10	P10	-	-	-	-
	4.2 (14′)	P3	P3	P4	P5	P5	P7	P7	P8	P10	P10	P10	-	-	-	-	-
	4.5 (15′)	P3	P3	P4	P5	P5	P7	P7	P9	P10	P10	-	-	-	-	-	-
	4.8 (16′)	P3	P4	P5	P5	P7	P7	P8	-	-	-	-	-	-	-	-	-
	5.1 (17′)	P3	P4	P5	P7	P7	P8	P9	-	-	-	-	-	-	-	-	-
6.0 (20′)	2.1 (7′)	P1	P1	P2	P2	P3	P3	P3	P4	P4	P6	P6	P7	P7	P8	P9	P10	P10
	2.4 (8′)	P1	P2	P2	P3	P3	P3	P4	P5	P6	P7	P7	P7	P8	P10	P10	-
	2.7 (9′)	P1	P2	P3	P3	P3	P4	P5	P5	P7	P7	P7	P10	P10	P10	-	-
	3.0 (10′)	P2	P2	P3	P3	P4	P4	P5	P5	P7	P7	P9	P10	P10	P10	-	-
	3.3 (11′)	P2	P3	P3	P3	P4	P5	P5	P7	P7	P8	P10	P10	P10	-	-	-
	3.6 (12′)	P2	P3	P3	P4	P5	P5	P7	P7	P8	P10	P10	P10	-	-	-	-
	3.9 (13′)	P3	P3	P3	P5	P5	P7	P7	P7	P9	P10	P10	-	-	-	-	-
	4.2 (14′)	P3	P3	P4	P5	P5	P7	P7	P8	P10	P10	P10	-	-	-	-	-
	4.5 (15′)	P3	P4	P5	P5	P7	P7	P8	P10	P10	P10	-	-	-	-	-	-
	4.8 (16′)	P3	P4	P5	P5	P7	P7	P8	-	-	-	-	-	-	-	-	-
	5.1 (17′)	P3	P4	P5	P7	P7	P8	-	-	-	-	-	-	-	-	-	-
6.3 (21′)	2.1 (7′)	P1	P1	P2	P3	P3	P3	P4	P5	P6	P6	P7	P7	P8	P10	P10	P10
	2.4 (8′)	P1	P2	P2	P3	P3	P4	P4	P5	P6	P7	P7	P8	P10	P10	P10	-
	2.7 (9′)	P1	P2	P3	P3	P3	P4	P5	P5	P7	P7	P8	P10	P10	P10	-	-
	3.0 (10′)	P2	P2	P3	P3	P4	P5	P5	P7	P7	P8	P10	P10	P10	-	-	-
	3.3 (11′)	P2	P3	P3	P3	P4	P5	P5	P5	P7	P7	P9	P10	P10	-	-	-
	3.6 (12′)	P2	P3	P3	P4	P5	P5	P7	P7	P8	P10	P10	P10	-	-	-	-
	3.9 (13′)	P3	P3	P3	P5	P5	P7	P7	P8	P10	P10	P10	-	-	-	-	-
	4.2 (14′)	P3	P3	P4	P5	P6	P7	P7	P9	P10	P10	-	-	-	-	-	-
	4.5 (15′)	P3	P4	P5	P5	P7	P7	P7	P8	P10	P10	-	-	-	-	-	-
	4.8 (16′)	P3	P4	P5	P7	P7	P8	-	-	-	-	-	-	-	-	-	-
	5.1 (17′)	P4	P5	P5	P7	P7	P8	-	-	-	-	-	-	-	-	-	-
6.6 (22′)	2.1 (7′)	P1	P1	P2	P3	P3	P3	P4	P5	P6	P7	P7	P7	P8	P10	P10	-
	2.4 (8′)	P1	P2	P2	P3	P3	P4	P5	P5	P6	P7	P7	P8	P10	P10	-	-
	2.7 (9′)	P2	P2	P3	P3	P3	P4	P5	P5	P7	P7	P8	P10	P10	P10	-	-
	3.0 (10′)	P2	P2	P3	P3	P4	P5	P5	P7	P7	P8	P10	P10	P10	-	-	-
	3.3 (11′)	P2	P3	P3	P4	P5	P5	P7	P7	P8	P10	P10	P10	-	-	-	-
	3.6 (12′)	P2	P3	P3	P4	P5	P7	P7	P7	P9	P10	P10	-	-	-	-	-
	3.9 (13′)	P3	P3	P4	P5	P5	P7	P7	P8	P10	P10	P10	-	-	-	-	-
	4.2 (14′)	P3	P3	P4	P5	P7	P7	P8	P10	P10	P10	-	-	-	-	-	-
	4.5 (15′)	P3	P4	P5	P5	P7	P7	P8	P10	P10	-	-	-	-	-	-	-
	4.8 (16′)	P3	P4	P5	P7	P7	P8	-	-	-	-	-	-	-	-	-	-
	5.1 (17′)	P4	P5	P5	P7	P7	P9	-	-	-	-	-	-	-	-	-	-

LEGEND:

P1 = W150 x 14 (W6 x 9)
P2 = W150 x 18 (W6 x 12)
P3 = W150 x 22 (W6 x 15)
P4 = W200 x 27 (W8 x 18)
P5 = W200 x 31 (W8 x 21)
P6 = W250 x 33 (W10 x 22)
P7 = W250 x 39 (W10 x 26)
P8 = W360 x 45 (W14 x 30)
P9 = W460 x 52 (W18 x 35)
P10 = W460 x 60 (W18 x 40)

NOTES:

1. SEE SHEET 2 FOR SIGN POST SELECTION NOTES AND SHEET 4 FOR SIGNS ON THREE POSTS.
2. ALL DIMENSIONS ARE IN MILLIMETERS UNLESS OTHERWISE NOTED. ENGLISH UNITS IN PARENTHESIS ( ).
3. EITHER ALL METRIC OR ALL ENGLISH UNITS MUST BE USED ON PLANS. METRIC AND ENGLISH UNITS SHOWN MAY NOT BE MIXED.

COMMONWEALTH OF PENNSYLVANIA
DEPARTMENT OF TRANSPORTATION
BUREAU OF HIGHWAY SAFETY AND TRAFFIC ENGINEERING

POST-MOUNTED SIGNS, TYPE A

POST SELECTION TABLE

RECOMMENDED MAY 25, 2007
Glenn C Rowe
CHIEF, TRAFFIC ENGINEERING AND OPERATIONS DIVISION

RECOMMENDED MAY 25, 2007
M C Patel
CHIEF HIGHWAY ENGINEER

POST SELECTION TABLE - THREE POSTS

W m (FT)	L_B m (FT)	HEIGHT "H" IN m (FT)												
		1.220 (4′)	1.525 (5′)	1.830 (6′)	2.135 (7′)	2.440 (8′)	2.745 (9′)	3.050 (10′)	3.355 (11′)	3.660 (12′)	3.965 (13′)	4.270 (14′)	4.575 (15′)	4.880 (16′)
6.6 (22′)	2.1 (7′)	P1	P1	P1	P2	P2	P3	P3	P3	P4	P5	P5	P6	P7
	2.4 (8′)	P1	P1	P2	P2	P3	P3	P3	P4	P4	P5	P5	P7	P7
	2.7 (9′)	P1	P1	P2	P2	P3	P3	P3	P4	P5	P5	P7	P7	P8
	3.0 (10′)	P1	P2	P2	P3	P3	P3	P4	P5	P5	P7	P7	P7	P8
	3.3 (11′)	P1	P2	P3	P3	P3	P4	P4	P5	P7	P7	P7	P8	P10
	3.6 (12′)	P2	P2	P3	P3	P3	P4	P5	P5	P7	P7	P8	P9	P10
	3.9 (13′)	P2	P3	P3	P3	P4	P5	P5	P7	P7	P7	P8	P10	P10
	4.2 (14′)	P2	P3	P3	P4	P5	P5	P7	P7	P7	P8	P10	P10	P10
	4.5 (15′)	P3	P3	P3	P4	P5	P5	P7	P7	P8	-	-	-	-
	4.8 (16′)	P3	P3	P4	P5	P5	P7	P7	P7	P8	-	-	-	-
	5.1 (17′)	P3	P3	P4	P5	P5	P7	P7	P8	-	-	-	-	-
6.9 (23′)	2.1 (7′)	P1	P1	P1	P2	P2	P3	P3	P3	P4	P5	P6	P6	P7
	2.4 (8′)	P1	P1	P2	P2	P3	P3	P3	P4	P5	P5	P6	P7	P7
	2.7 (9′)	P1	P2	P2	P3	P3	P3	P4	P4	P5	P5	P7	P7	P8
	3.0 (10′)	P1	P2	P2	P3	P3	P3	P4	P5	P5	P7	P7	P8	P9
	3.3 (11′)	P2	P2	P3	P3	P3	P4	P5	P5	P7	P7	P7	P8	P10
	3.6 (12′)	P2	P2	P3	P3	P4	P5	P5	P7	P7	P7	P8	P10	P10
	3.9 (13′)	P2	P3	P3	P3	P4	P5	P5	P7	P7	P8	P10	P10	P10
	4.2 (14′)	P2	P3	P3	P4	P5	P5	P7	P7	P7	P8	P10	P10	P10
	4.5 (15′)	P3	P3	P4	P4	P5	P6	P7	P7	P8	-	-	-	-
	4.8 (16′)	P3	P3	P4	P5	P5	P7	P7	P8	P9	-	-	-	-
	5.1 (17′)	P3	P3	P4	P5	P7	P7	P7	P8	-	-	-	-	-
7.2 (24′)	2.1 (7′)	P1	P1	P1	P2	P2	P3	P3	P3	P4	P5	P6	P7	P7
	2.4 (8′)	P1	P1	P2	P2	P3	P3	P3	P4	P5	P5	P6	P7	P7
	2.7 (9′)	P1	P2	P2	P3	P3	P3	P4	P5	P5	P5	P7	P7	P8
	3.0 (10′)	P1	P2	P2	P3	P3	P4	P4	P5	P5	P7	P7	P8	P10
	3.3 (11′)	P2	P2	P3	P3	P3	P4	P5	P5	P7	P7	P8	P9	P10
	3.6 (12′)	P2	P2	P3	P3	P4	P5	P5	P7	P7	P7	P8	P10	P10
	3.9 (13′)	P2	P3	P3	P4	P5	P5	P6	P7	P7	P8	P10	P10	P10
	4.2 (14′)	P2	P3	P3	P4	P5	P5	P7	P7	P8	P9	P10	P10	-
	4.5 (15′)	P3	P3	P4	P5	P5	P7	P7	P7	P8	-	-	-	-
	4.8 (16′)	P3	P3	P4	P5	P5	P7	P7	P8	-	-	-	-	-
	5.1 (17′)	P3	P4	P5	P5	P7	P7	P8	P9	-	-	-	-	-
7.5 (25′)	2.1 (7′)	P1	P1	P2	P2	P3	P3	P3	P4	P4	P5	P6	P7	P7
	2.4 (8′)	P1	P1	P2	P2	P3	P3	P3	P4	P5	P5	P7	P7	P7
	2.7 (9′)	P1	P2	P2	P3	P3	P3	P4	P5	P5	P6	P7	P7	P8
	3.0 (10′)	P1	P2	P2	P3	P3	P4	P4	P5	P5	P7	P7	P8	P10
	3.3 (11′)	P2	P2	P3	P3	P3	P4	P5	P6	P7	P7	P8	P10	P10
	3.6 (12′)	P2	P3	P3	P3	P4	P5	P5	P7	P7	P8	P9	P10	P10
	3.9 (13′)	P2	P3	P3	P4	P5	P5	P7	P7	P7	P8	P10	P10	P10
	4.2 (14′)	P2	P3	P3	P4	P5	P5	P7	P7	P8	P10	P10	P10	-
	4.5 (15′)	P3	P3	P4	P5	P5	P7	P7	P8	P9	-	-	-	-
	4.8 (16′)	P3	P3	P4	P5	P6	P7	P7	P8	-	-	-	-	-
	5.1 (17′)	P3	P4	P5	P5	P7	P7	P8	-	-	-	-	-	-
7.8 (26′)	2.1 (7′)	P1	P1	P2	P2	P3	P3	P3	P4	P5	P6	P6	P7	P7
	2.4 (8′)	P1	P1	P2	P2	P3	P3	P4	P4	P5	P6	P7	P7	P7
	2.7 (9′)	P1	P2	P2	P3	P3	P3	P4	P5	P5	P7	P7	P8	P9
	3.0 (10′)	P1	P2	P3	P3	P3	P4	P5	P5	P7	P7	P8	P9	P10
	3.3 (11′)	P2	P2	P3	P3	P4	P4	P5	P7	P7	P7	P8	P10	P10
	3.6 (12′)	P2	P3	P3	P3	P4	P5	P5	P7	P7	P8	P10	P10	P10
	3.9 (13′)	P2	P3	P3	P4	P5	P5	P7	P7	P8	P9	P10	P10	-
	4.2 (14′)	P3	P3	P4	P4	P5	P7	P7	P7	P8	P10	P10	P10	-
	4.5 (15′)	P3	P3	P4	P5	P5	P7	P7	P8	-	-	-	-	-
	4.8 (16′)	P3	P4	P4	P5	P7	P7	P7	P9	-	-	-	-	-
	5.1 (17′)	P3	P4	P5	P5	P7	P7	P8	-	-	-	-	-	-
8.1 (27′)	2.1 (7′)	P1	P1	P2	P2	P2	P3	P3	P3	P4	P5	P6	P6	P7
	2.4 (8′)	P1	P2	P2	P3	P3	P3	P4	P5	P5	P6	P7	P7	P8
	2.7 (9′)	P1	P2	P2	P3	P3	P3	P4	P5	P5	P7	P7	P8	P10
	3.0 (10′)	P2	P2	P3	P3	P3	P4	P5	P5	P7	P7	P8	P10	P10
	3.3 (11′)	P2	P2	P3	P3	P4	P5	P5	P7	P7	P8	P9	P10	P10
	3.6 (12′)	P2	P3	P3	P3	P4	P5	P7	P7	P7	P8	P10	P10	P10
	3.9 (13′)	P2	P3	P3	P4	P5	P5	P7	P7	P8	P10	P10	P10	-
	4.2 (14′)	P3	P3	P4	P5	P5	P7	P7	P9	P10	P10	-	-	-
	4.5 (15′)	P3	P3	P4	P5	P5	P7	P7	P8	-	-	-	-	-
	4.8 (16′)	P3	P4	P5	P5	P7	P7	P8	-	-	-	-	-	-
	5.1 (17′)	P3	P4	P5	P5	P7	P7	P8	-	-	-	-	-	-
8.4 (28′)	2.1 (7′)	P1	P1	P2	P2	P3	P3	P3	P4	P5	P6	P7	P7	P7
	2.4 (8′)	P1	P2	P2	P3	P3	P3	P4	P5	P5	P7	P7	P7	P8
	2.7 (9′)	P1	P2	P2	P3	P3	P4	P4	P5	P5	P7	P7	P8	P10
	3.0 (10′)	P2	P2	P3	P3	P3	P4	P5	P5	P7	P7	P8	P10	P10
	3.3 (11′)	P2	P2	P3	P3	P4	P5	P5	P7	P7	P8	P9	P10	P10
	3.6 (12′)	P2	P3	P3	P3	P4	P5	P7	P7	P7	P9	P10	P10	P10
	3.9 (13′)	P2	P3	P3	P4	P5	P5	P7	P7	P8	P10	P10	P10	-
	4.2 (14′)	P3	P3	P4	P5	P5	P7	P7	P8	P10	P10	P10	-	-
	4.5 (15′)	P3	P3	P4	P5	P6	P7	P7	P8	-	-	-	-	-
	4.8 (16′)	P3	P4	P5	P5	P7	P7	P8	-	-	-	-	-	-
	5.1 (17′)	P3	P4	P5	P6	P7	P7	P9	-	-	-	-	-	-
8.7 (29′)	2.1 (7′)	P1	P1	P2	P2	P3	P3	P3	P4	P5	P6	P7	P7	P7
	2.4 (8′)	P1	P2	P2	P3	P3	P3	P4	P5	P5	P7	P7	P7	P8
	2.7 (9′)	P1	P2	P2	P3	P3	P4	P5	P5	P6	P7	P7	P9	P10
	3.0 (10′)	P2	P2	P3	P3	P3	P4	P5	P5	P7	P7	P8	P10	P10
	3.3 (11′)	P2	P3	P3	P3	P4	P5	P5	P7	P7	P8	P10	P10	P10
	3.6 (12′)	P2	P3	P3	P4	P4	P5	P7	P7	P8	P9	P10	P10	-
	3.9 (13′)	P2	P3	P3	P4	P5	P6	P7	P7	P8	P10	P10	P10	-
	4.2 (14′)	P3	P3	P4	P5	P5	P7	P7	P8	P10	P10	P10	-	-
	4.5 (15′)	P3	P3	P4	P5	P7	P7	P8	P9	-	-	-	-	-
	4.8 (16′)	P3	P4	P5	P5	P7	P7	P8	-	-	-	-	-	-
	5.1 (17′)	P3	P4	P5	P7	P7	P8	-	-	-	-	-	-	-
9.0 (30′)	2.1 (7′)	P1	P1	P2	P2	P3	P3	P4	P4	P6	P6	P7	P7	P8
	2.4 (8′)	P1	P2	P2	P3	P3	P3	P4	P5	P6	P7	P7	P7	P8
	2.7 (9′)	P1	P2	P3	P3	P3	P4	P5	P5	P7	P7	P7	P10	P10
	3.0 (10′)	P2	P2	P3	P3	P4	P4	P5	P5	P7	P8	P9	P10	P10
	3.3 (11′)	P2	P3	P3	P3	P4	P5	P5	P7	P7	P8	P10	P10	P10
	3.6 (12′)	P2	P3	P3	P4	P5	P5	P7	P7	P8	P10	P10	P10	-
	3.9 (13′)	P3	P3	P3	P5	P5	P7	P7	P8	P9	P10	P10	-	-
	4.2 (14′)	P3	P3	P4	P5	P5	P7	P7	P8	P10	P10	P10	-	-
	4.5 (15′)	P3	P4	P5	P5	P7	P7	P8	-	-	-	-	-	-
	4.8 (16′)	P3	P4	P5	P5	P7	P7	P8	-	-	-	-	-	-
	5.1 (17′)	P3	P5	P5	P7	P7	P8	-	-	-	-	-	-	-

LEGEND:

P1 = W150 x 14 (W6 x 9)
P2 = W150 x 18 (W6 x 12)
P3 = W150 x 22 (W6 x 15)
P4 = W200 x 27 (W8 x 18)
P5 = W200 x 31 (W8 x 21)
P6 = W250 x 33 (W10 x 22)
P7 = W250 x 39 (W10 x 26)
P8 = W360 x 45 (W14 x 30)
P9 = W460 x 52 (W18 x 35)
P10 = W460 x 60 (W18 x 40)

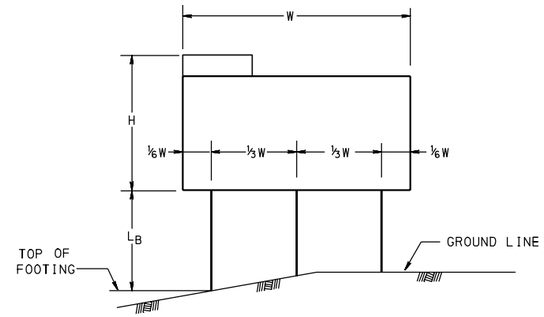

SIGN ON THREE POSTS
SKETCH B

NOTES:

1. SEE SHEETS 2 AND 3 FOR SIGN POST SELECTION NOTES AND SIGNS ON TWO POSTS.
2. ALL DIMENSIONS ARE IN MILLIMETERS UNLESS OTHERWISE NOTED. ENGLISH UNITS IN PARENTHESIS ( ).
3. EITHER ALL METRIC OR ALL ENGLISH UNITS MUST BE USED ON PLANS. METRIC AND ENGLISH UNITS SHOWN MAY NOT BE MIXED.

COMMONWEALTH OF PENNSYLVANIA
DEPARTMENT OF TRANSPORTATION
BUREAU OF HIGHWAY SAFETY AND TRAFFIC ENGINEERING

POST-MOUNTED SIGNS, TYPE A

POST SELECTION TABLE

RECOMMENDED MAY 25, 2007
Glenn C Rowe
CHIEF, TRAFFIC ENGINEERING AND OPERATIONS DIVISION

RECOMMENDED MAY 25, 2007
M. C. Patel
CHIEF HIGHWAY ENGINEER

SHT. 4 OF 8

TC-8702A

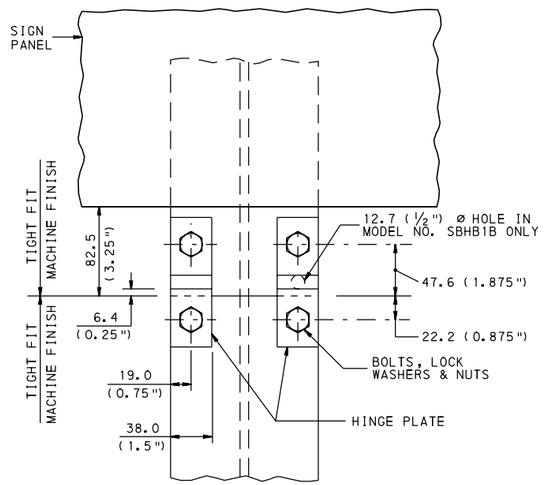

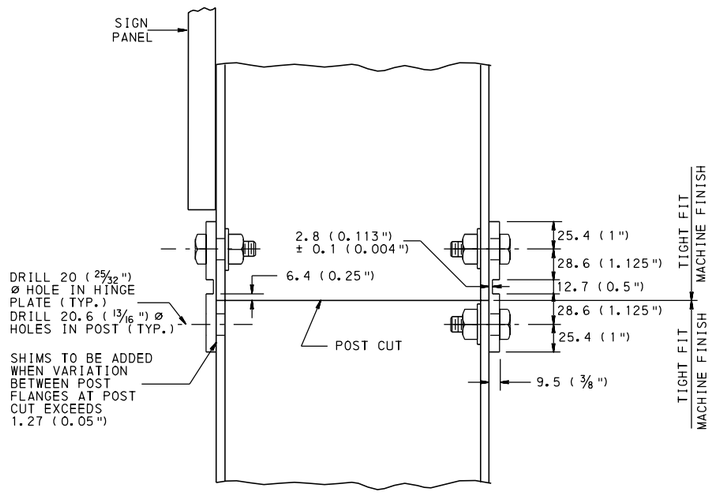

POST HINGE DETAIL

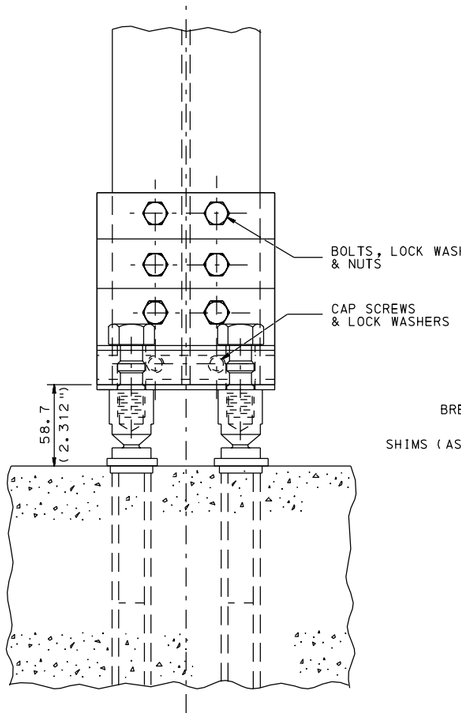

FRONT VIEW

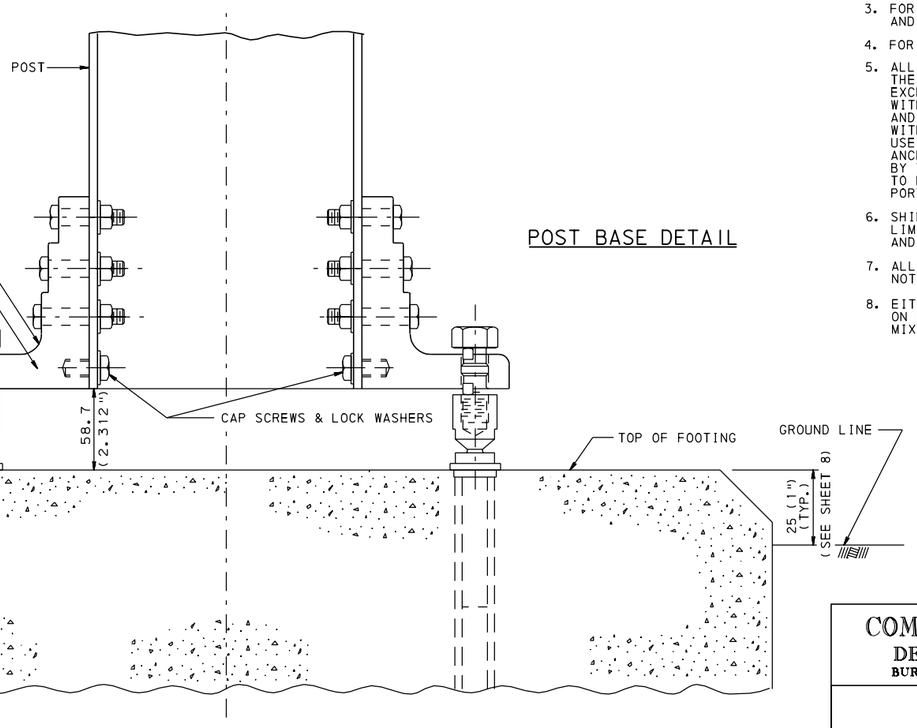

SIDE VIEW

POST BASE DETAIL

BREAKAWAY ASSEMBLIES

TO BE FROM A SUPPLIER LISTED IN BULLETIN 15.

NOTES:

1. THE BRACKET NUMBER IS STAMPED ON THE BRACKET.
2. BOLT THE BRACKETS TO POST, THEN PLACE POST AND CONNECTED BRACKET TO BREAKAWAY COUPLING.
3. FOR BRACKET, BREAKAWAY COUPLING, COUPLING BOLT, AND SHIM DETAILS, REFER TO SHEET 6.
4. FOR FOOTING AND ANCHOR DETAILS, REFER TO SHEET 8.
5. ALL BOLTS SHALL BE TIGHTENED IN ACCORDANCE WITH THE MANUFACTURER'S SPECIFICATIONS. FASTENERS, EXCEPT FOR SPECIAL BOLT AND COUPLING, ARE INSTALLED WITH LOCKWASHERS. FASTENERS, INCLUDING SPECIAL BOLT AND COUPLING, SHOULD BE SECURED AS TIGHT AS POSSIBLE WITH CONVENTIONAL WRENCHES. DO NOT USE A PIPE WRENCH. USE LOWER WRENCH FLATS TO TIGHTEN COUPLINGS INTO ANCHORS. TIGHTEN SPECIAL BOLTS WHILE HOLDING COUPLINGS BY THE UPPER WRENCH FLATS WITH AN ADDITIONAL WRENCH TO PREVENT AN INDUCED TORQUE STRESS ACROSS THE NECKED PORTION OF THE COUPLING.
6. SHIMS BETWEEN THE COUPLINGS AND ANCHORS SHOULD BE LIMITED TO TWO SHIMS UNDERNEATH ANY ONE COUPLING AND THREE SHIMS UNDERNEATH ANY TWO COUPLINGS.
7. ALL DIMENSIONS ARE IN MILLIMETERS UNLESS OTHERWISE NOTED. ENGLISH UNITS IN PARENTHESIS ( ).
8. EITHER ALL METRIC OR ALL ENGLISH UNITS MUST BE USED ON PLANS. METRIC AND ENGLISH UNITS SHOWN MAY NOT BE MIXED.

COMMONWEALTH OF PENNSYLVANIA
DEPARTMENT OF TRANSPORTATION
BUREAU OF HIGHWAY SAFETY AND TRAFFIC ENGINEERING

POST-MOUNTED SIGNS, TYPE A

POST BASE AND HINGE DETAILS

RECOMMENDED MAY 25, 2007
Glenn C Rowe
CHIEF, TRAFFIC ENGINEERING AND OPERATIONS DIVISION

RECOMMENDED MAY 25, 2007
M. C. Patel
CHIEF HIGHWAY ENGINEER

TC-8702A

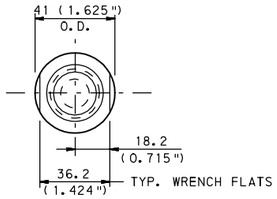

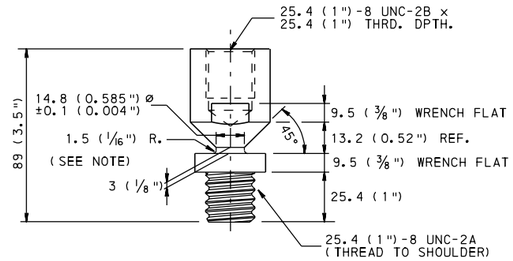

BREAKAWAY COUPLING DETAIL

NOTE: DO NOT PLACE TORQUE ACROSS NECK PORTION OF COUPLING.

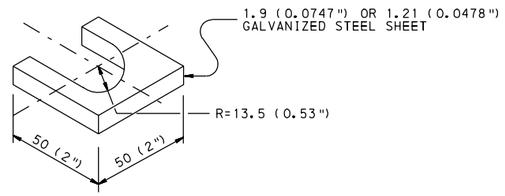

SHIM DETAIL

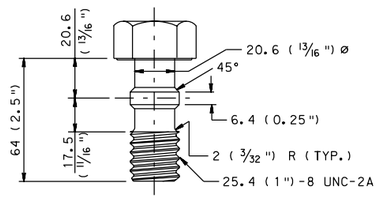

COUPLING BOLT DETAIL

NOTES:

1. ALL DIMENSIONS ARE IN MILLIMETERS UNLESS OTHERWISE NOTED. ENGLISH UNITS IN PARENTHESIS ( ).
2. EITHER ALL METRIC OR ALL ENGLISH UNITS MUST BE USED ON PLANS. METRIC AND ENGLISH UNITS SHOWN MAY NOT BE MIXED.

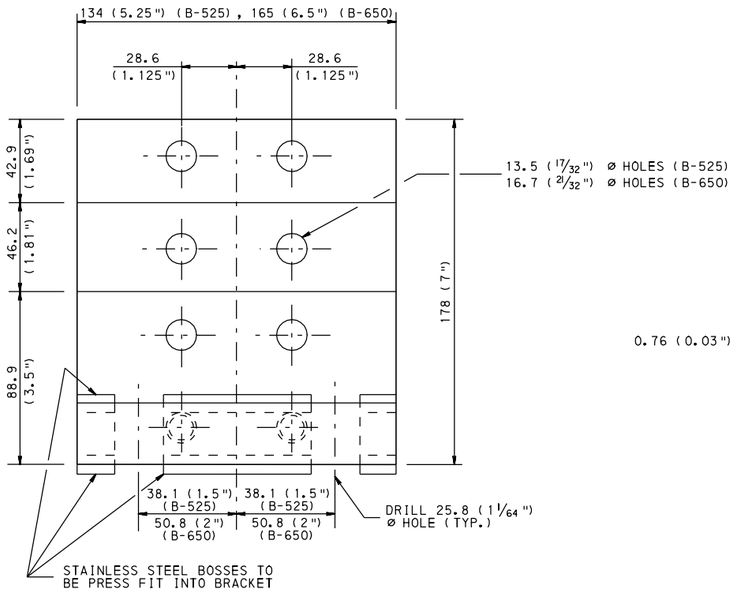

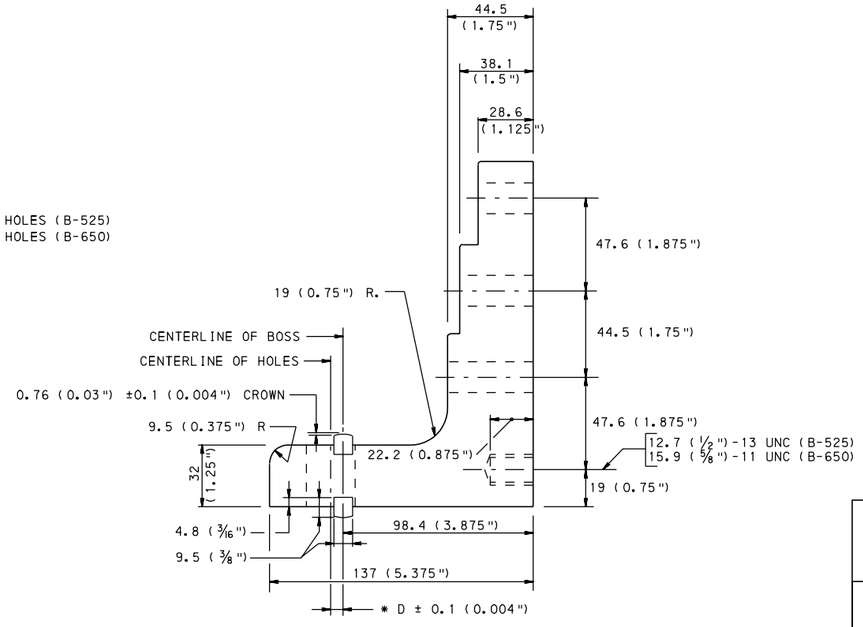

* SELECT BRACKET FROM THE BRACKET SELECTION TABLES ON SHEET 7, THEN SELECT THE VALUE FOR DIMENSION "D" FROM TABLE A.

BRACKET DETAIL

BRACKET NO.	D mm (INCHES)
1	2.5 (0.100 ")
2	3.8 (0.150 ")
3	5.1 (0.200 ")

TABLE A

COMMONWEALTH OF PENNSYLVANIA
DEPARTMENT OF TRANSPORTATION
BUREAU OF HIGHWAY SAFETY AND TRAFFIC ENGINEERING

POST-MOUNTED SIGNS, TYPE A

BREAKAWAY COUPLING AND BRACKET DETAILS

RECOMMENDED MAY 25, 2007
Glenn C Rowe
CHIEF, TRAFFIC ENGINEERING AND OPERATIONS DIVISION

RECOMMENDED MAY 25, 2007
M. C. Patel
CHIEF HIGHWAY ENGINEER

SHT. 6 OF 8

TC-8702A

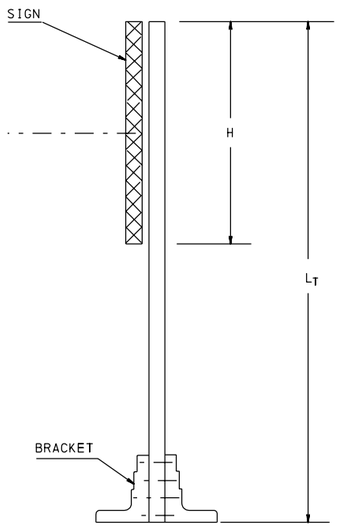

W150 (W6) POST

POST LENGTH (L_T) IN m (FT)

SIGN HEIGHT (H) IN m (FT)

	3.4 (11′)	3.7 (12′)	4.0 (13′)	4.3 (14′)	4.6 (15′)	4.9 (16′)	5.2 (17′)	5.5 (18′)	5.8 (19′)	6.1 (20′)	6.4 (21′)	6.7 (22′)	7.0 (23′)	7.3 (24′)	7.6 (25′)	7.9 (26′)	8.2 (27′)	8.5 (28′)	8.8 (29′)	9.1 (30′)	9.4 (31′)	9.7 (32′)	10.0 (33′)	10.3 (34′)
1.220 (4′)																							N/A	
1.525 (5′)																								
1.830 (6′)																								
2.135 (7′)																								
2.440 (8′)																								
2.745 (9′)																								
3.050 (10′)						2								1										
3.355 (11′)																								
3.660 (12′)																								
3.965 (13′)				3																				
4.270 (14′)																								
4.575 (15′)																								
4.880 (16′)																								
5.185 (17′)																								
5.490 (18′)																								
5.795 (19′)																								

W200 (W8) POST

POST LENGTH (L_T) IN m (FT)

SIGN HEIGHT (H) IN m (FT)

	3.4 (11′)	3.7 (12′)	4.0 (13′)	4.3 (14′)	4.6 (15′)	4.9 (16′)	5.2 (17′)	5.5 (18′)	5.8 (19′)	6.1 (20′)	6.4 (21′)	6.7 (22′)	7.0 (23′)	7.3 (24′)	7.6 (25′)	7.9 (26′)	8.2 (27′)	8.5 (28′)	8.8 (29′)	9.1 (30′)	9.4 (31′)	9.7 (32′)	10.0 (33′)	10.3 (34′)
1.220 (4′)																							N/A	
1.525 (5′)																								
1.830 (6′)																								
2.135 (7′)																								
2.440 (8′)																								
2.745 (9′)																								
3.050 (10′)							2							1										
3.355 (11′)																								
3.660 (12′)																								
3.965 (13′)				3																				
4.270 (14′)																								
4.575 (15′)																								
4.880 (16′)																								
5.185 (17′)																								
5.490 (18′)																								
5.795 (19′)																								

B-525 BRACKET TABLES

NOTES FOR SELECTION OF BRACKET NUMBER:

1. FOR EACH POST, DETERMINE VALUES OF "L_T" AND "H" AS INDICATED IN SKETCH.

   H = MAXIMUM HEIGHT OF SIGN IN m (FT).
   L_T = DISTANCE BETWEEN THE TOP OF FOOTING AND THE TOP OF SIGN IN m (FT) FOR EACH POST.

2. ENTER TABLE WITH "H" AND "L_T" TO SELECT THE REQUIRED BRACKET FOR THAT POST.

3. FOR SIZES OF "H" AND "L_T" BETWEEN THOSE VALUES ON THE TABLE, USE THE NEXT HIGHEST VALUE.

NOTES:

1. ALL DIMENSIONS ARE IN MILLIMETERS UNLESS OTHERWISE NOTED. ENGLISH UNITS IN PARENTHESIS ( ).

2. EITHER ALL METRIC OR ALL ENGLISH UNITS MUST BE USED ON PLANS. METRIC AND ENGLISH UNITS SHOWN MAY NOT BE MIXED.

W250 (W10) POST

POST LENGTH (L_T) IN m (FT)

SIGN HEIGHT (H) IN m (FT)

	3.4 (11′)	3.7 (12′)	4.0 (13′)	4.3 (14′)	4.6 (15′)	4.9 (16′)	5.2 (17′)	5.5 (18′)	5.8 (19′)	6.1 (20′)	6.4 (21′)	6.7 (22′)	7.0 (23′)	7.3 (24′)	7.6 (25′)	7.9 (26′)	8.2 (27′)	8.5 (28′)	8.8 (29′)	9.1 (30′)	9.4 (31′)	9.7 (32′)	10.0 (33′)	10.3 (34′)
1.220 (4′)																							N/A	
1.525 (5′)																								
1.830 (6′)																								
2.135 (7′)																								
2.440 (8′)																								
2.745 (9′)																								
3.050 (10′)								2						1										
3.355 (11′)																								
3.660 (12′)																								
3.965 (13′)					3																			
4.270 (14′)																								
4.575 (15′)																								
4.880 (16′)																								
5.185 (17′)																								
5.490 (18′)																								
5.795 (19′)																								

W360 (W14) POST

POST LENGTH (L_T) IN m (FT)

SIGN HEIGHT (H) IN m (FT)

	3.4 (11′)	3.7 (12′)	4.0 (13′)	4.3 (14′)	4.6 (15′)	4.9 (16′)	5.2 (17′)	5.5 (18′)	5.8 (19′)	6.1 (20′)	6.4 (21′)	6.7 (22′)	7.0 (23′)	7.3 (24′)	7.6 (25′)	7.9 (26′)	8.2 (27′)	8.5 (28′)	8.8 (29′)	9.1 (30′)	9.4 (31′)	9.7 (32′)	10.0 (33′)	10.3 (34′)
1.220 (4′)																							N/A	
1.525 (5′)																								
1.830 (6′)																								
2.135 (7′)																								
2.440 (8′)																								
2.745 (9′)																								
3.050 (10′)																								
3.355 (11′)																								
3.660 (12′)																								
3.965 (13′)																								
4.270 (14′)																								
4.575 (15′)																								
4.880 (16′)																								
5.185 (17′)																								
5.490 (18′)																								
5.795 (19′)																								

W460 (W18) POST

POST LENGTH (L_T) IN m (FT)

SIGN HEIGHT (H) IN m (FT)

	3.4 (11′)	3.7 (12′)	4.0 (13′)	4.3 (14′)	4.6 (15′)	4.9 (16′)	5.2 (17′)	5.5 (18′)	5.8 (19′)	6.1 (20′)	6.4 (21′)	6.7 (22′)	7.0 (23′)	7.3 (24′)	7.6 (25′)	7.9 (26′)	8.2 (27′)	8.5 (28′)	8.8 (29′)	9.1 (30′)	9.4 (31′)	9.7 (32′)	10.0 (33′)	10.3 (34′)
1.220 (4′)																							N/A	
1.525 (5′)																								
1.830 (6′)																								
2.135 (7′)																								
2.440 (8′)																								
2.745 (9′)																								
3.050 (10′)																								
3.355 (11′)					3							2						1						
3.660 (12′)																								
3.965 (13′)																								
4.270 (14′)																								
4.575 (15′)																								
4.880 (16′)																								
5.185 (17′)																								
5.490 (18′)																								
5.795 (19′)																								

B-650 BRACKET TABLES

COMMONWEALTH OF PENNSYLVANIA
DEPARTMENT OF TRANSPORTATION
BUREAU OF HIGHWAY SAFETY AND TRAFFIC ENGINEERING

POST-MOUNTED SIGNS, TYPE A

BRACKET SELECTION TABLES

RECOMMENDED MAY 25, 2007
Glenn C. Rowe
CHIEF, TRAFFIC ENGINEERING AND OPERATIONS DIVISION

RECOMMENDED MAY 25, 2007
M. L. Patel
CHIEF HIGHWAY ENGINEER

SHT. 7 OF 8

TC-8702A

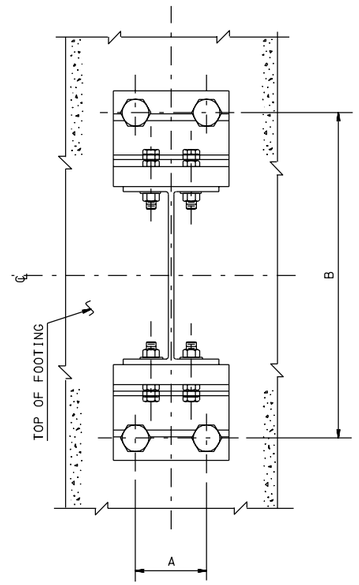

PLAN

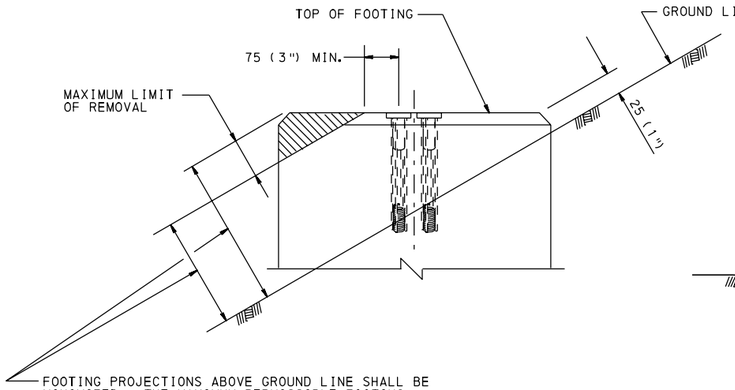

FOOTING PROJECTIONS ABOVE GROUND LINE SHALL BE MINIMIZED. THE MAXIMUM PERMISSIBLE FOOTING PROJECTION SHALL BE 100 (4") ON THE LOWER SLOPE SIDE. WHERE NECESSARY, THE SHADED AREA OF THE FOOTING SHALL BE REMOVED AND REINFORCEMENT SHALL BE BENT TO FIT.

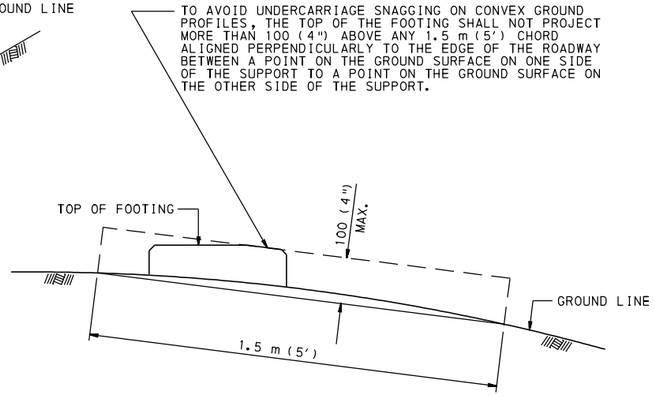

METRIC UNITS

POST SIZE	L_1* (m)	DEPTH K_1 (m)	REINF. STEEL F_1	REINF. STEEL F_2
W150	0.75	2.30	8-#13	8-#22
W200		2.60	9-#13	8-#22
W250	0.90	2.75	10-#13	10-#22
W360				
W460	1.05	2.90	10-#13	12-#22

ENGLISH UNITS

POST SIZE	L_1* (FT)	DEPTH K_1 (FT)	REINF. STEEL F_1	REINF. STEEL F_2
W6	2.5	7.50	8-#4	8-#7
W8		8.50	9-#4	8-#7
W10	3.0	9.00	10-#4	10-#7
W14				
W18	3.5	9.50	10-#4	12-#7

* DIAMETER IF CIRCULAR OR MINIMUM SIDE IF SQUARE OR RECTANGULAR

FOOTING SELECTION TABLE

SOIL PROPERTIES:

FOUNDATION DESIGN IS BASED ON BROMS' METHOD USING THE FOLLOWING SOIL PROPERTIES:

TYPE OF SOIL = LOOSE-MEDIUM SAND
UNIT WEIGHT OF SOIL (γ) = 18.85 kN/m (120 PCF)
ANGLE OF INTERNAL FRICTION (ϕ) = 25°.

NOTES:

1. ENTER FOOTING SELECTION TABLE WITH REQUIRED POST SIZE AND FIND REQUIRED FOOTING VALUES AS SHOWN IN DETAILS.
2. THE ANCHOR SHALL BE 304 STAINLESS STEEL WITH 1045 STEEL ROD AND 1008 COIL.
3. FORM THE TOP 0.3 m (1') OF THE FOOTING.
4. USE CLASS "A" CEMENT CONCRETE IN ALL FOOTINGS.
5. ACTUAL DIMENSIONS "A" & "B" SHOULD BE OBTAINED FROM THE MANUFACTURER OR MEASURED FROM THE ASSEMBLED BRACKETS PRIOR TO PLACEMENT OF ANCHORS. APPROXIMATE DIMENSIONS ARE AS FOLLOWS:
   - A (LATERAL SPACING OF ANCHORS)
     76.2 (3") FOR B-525 USED ON W150 (W6) & W200 (W8) POSTS.
     101.6 (4") FOR B-650 USED ON W250 (W10), W360 (W14) & W460 (W18) POSTS.
   - B (LONGITUDINAL SPACING OF ANCHORS)
     BRACKET #1 - DEPTH OF POST SECTION PLUS 201.6 (7 15/16").
     BRACKET #2 - DEPTH OF POST SECTION PLUS 204.8 (8 1/16").
     BRACKET #3 - DEPTH OF POST SECTION PLUS 206.4 (8 1/8").
6. TO INSURE PROPER SPACING AND ALIGNMENT OF ANCHORS, IT IS RECOMMENDED THAT ALL ANCHORS BE HELD IN PLACE BY A RIGID MACHINED TEMPLATE WHILE THE CONCRETE IS PLACED AND CURED.
7. ALL DIMENSIONS ARE IN MILLIMETERS UNLESS OTHERWISE NOTED. ENGLISH UNITS IN PARENTHESIS ( ).
8. EITHER ALL METRIC OR ALL ENGLISH UNITS MUST BE USED ON PLANS. METRIC AND ENGLISH UNITS SHOWN MAY NOT BE MIXED.

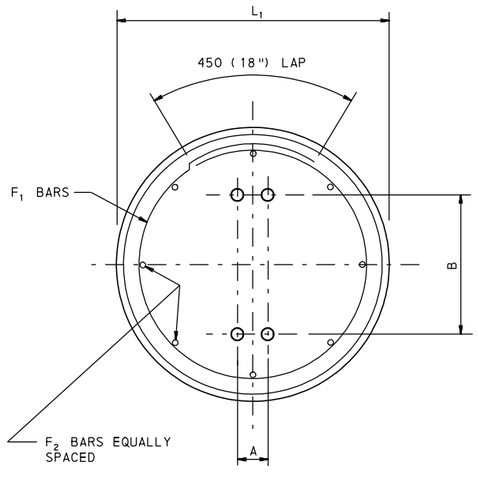

TOP VIEW

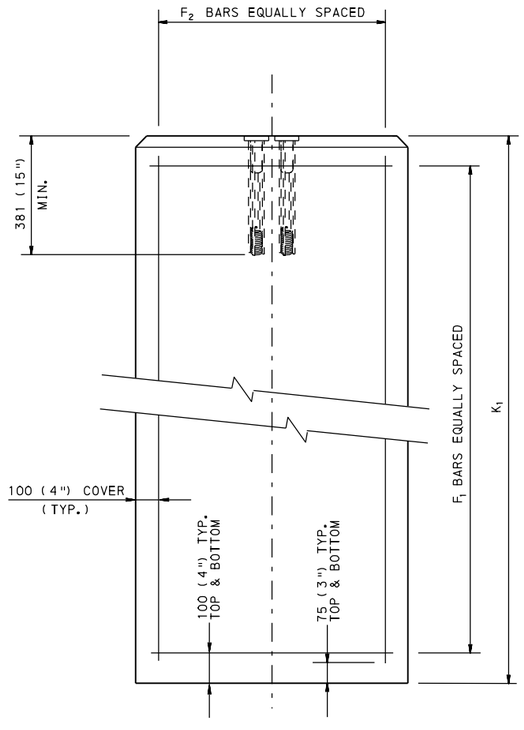

SIDE VIEW

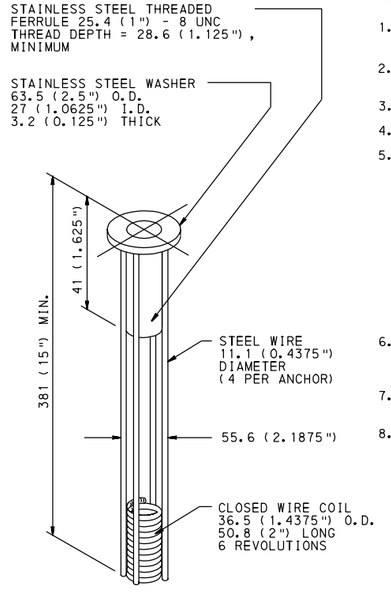

ANCHOR
(SEE NOTE 2)

COMMONWEALTH OF PENNSYLVANIA
DEPARTMENT OF TRANSPORTATION
BUREAU OF HIGHWAY SAFETY AND TRAFFIC ENGINEERING

POST-MOUNTED SIGNS, TYPE A

FOOTING DETAILS

RECOMMENDED MAY 25, 2007	RECOMMENDED MAY 25, 2007	SHT. 8 OF 8
Glenn C Rowe	M. C. Patel	
CHIEF, TRAFFIC ENGINEERING AND OPERATIONS DIVISION	CHIEF HIGHWAY ENGINEER	TC-8702A

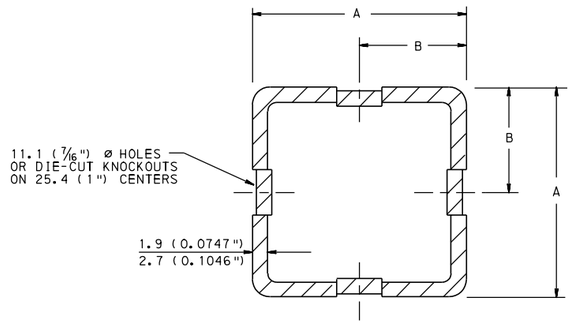

METRIC UNITS (mm)

SIGN POST				ANCHOR POST				ANCHOR SLEEVE *				SPLICE SLEEVE			
SIZE	DIMENSION A	DIMENSION B	THICK.	SIZE	DIMENSION A	DIMENSION B	THICK.	SIZE	DIMENSION A	DIMENSION B	THICK.	SIZE	DIMENSION A	DIMENSION B	THICK.
44.5	44.5	22.2	1.9	50.8	50.8	25.4	2.7	57.2	57.2	28.6	2.7	38.1	38.1	19.0	1.9
50.8	50.8	25.4	1.9	57.2	57.2	28.6	2.7	63.5	63.5	31.8	2.7	44.5	44.5	22.2	1.9
57.2	57.2	28.6	1.9	63.5	63.5	31.8	2.7	76.2	76.2	38.1	4.8	50.8	50.8	25.4	1.9

ENGLISH UNITS (INCHES)

SIGN POST				ANCHOR POST				ANCHOR SLEEVE *				SPLICE SLEEVE			
SIZE	DIMENSION A	DIMENSION B	THICK.	SIZE	DIMENSION A	DIMENSION B	THICK.	SIZE	DIMENSION A	DIMENSION B	THICK.	SIZE	DIMENSION A	DIMENSION B	THICK.
1.75"	1.75"	0.875"	0.0747"	2.00"	2.00"	1.000"	0.1046"	2.25"	2.25"	1.125"	0.1046"	1.50"	1.50"	0.750"	0.0747"
2.00"	2.00"	1.000"	0.0747"	2.25"	2.25"	1.125"	0.1046"	2.50"	2.50"	1.250"	0.1046"	1.75"	1.75"	0.875"	0.0747"
2.25"	2.25"	1.125"	0.0747"	2.50"	2.50"	1.250"	0.1046"	3.00"	3.00"	1.500"	0.1875"	2.00"	2.00"	1.000"	0.0747"

* ONLY REQUIRED FOR INSTALLATIONS IN CONCRETE.

SQUARE STEEL POSTS SYSTEM A

2.7 mm (0.1046") AND 1.9 mm (0.0747") - 415 MPa (60 KSI)

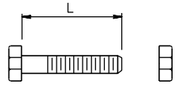

METRIC UNITS

SIGN POST SIZE (mm)	DIMENSION L (mm)
44.5	75
50.8	
57.2	90

ENGLISH UNITS

SIGN POST SIZE (INCHES)	DIMENSION L (INCHES)
1.75	3.0
2.00	
2.25	3.5

M10 x 1.5 (3/8" - 16 UNC) ANCHOR BOLTS & NUTS

CADMIUM PLATED STEEL, ZINC PLATED STEEL OR ALUMINUM

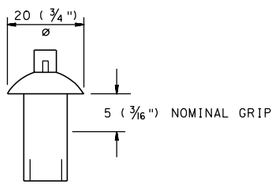

10 (3/8") DRIVE RIVET

CADMIUM PLATED STEEL, ZINC PLATED STEEL OR ALUMINUM

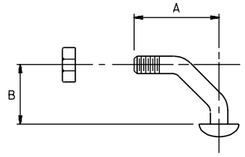

METRIC UNITS

SIGN POST SIZE (mm)	DIMENSION (mm) A	DIMENSION (mm) B
44.5	34.13	24.61
50.8		
57.2	39.69	30.16

ENGLISH UNITS

SIGN POST SIZE (INCHES)	DIMENSION (INCHES) A	DIMENSION (INCHES) B
1.75	1.343	0.969
2.00		
2.25	1.562	1.188

M8 x 1.25 (5/16"- 18 UNC) CORNER BOLTS & NUTS

CADMIUM PLATED STEEL, ZINC PLATED STEEL OR ALUMINUM

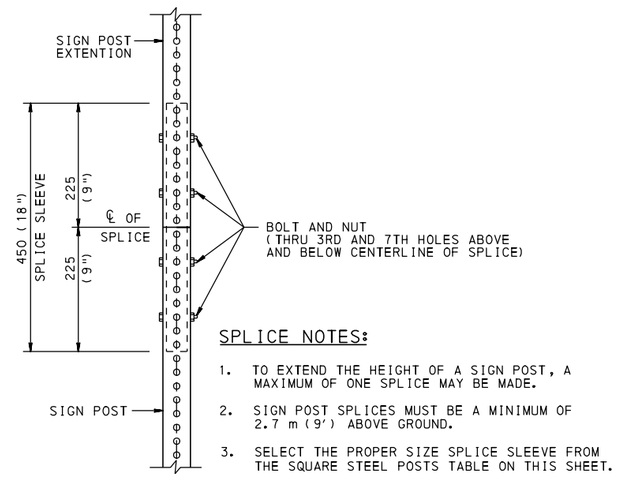

SPLICE NOTES:

1. TO EXTEND THE HEIGHT OF A SIGN POST, A MAXIMUM OF ONE SPLICE MAY BE MADE.
2. SIGN POST SPLICES MUST BE A MINIMUM OF 2.7 m (9') ABOVE GROUND.
3. SELECT THE PROPER SIZE SPLICE SLEEVE FROM THE SQUARE STEEL POSTS TABLE ON THIS SHEET.

SPLICE DETAIL

INSTALLATION INSTRUCTIONS:

1. DETERMINE THE PROPER SIZE AND NUMBER OF SIGN POSTS FROM THE APPROPRIATE GRAPH ON SHEET 2 OF 9.
2. PUNCH OUT APPROPRIATE KNOCKOUTS AND ATTACH THE SIGN.
3. DETERMINE THE PROPER SIZE ANCHOR POST FROM THE SQUARE STEEL POSTS TABLE ON THIS SHEET.
4. DRIVE THE ANCHOR POST INTO THE GROUND, USING THE APPROPRIATE SIZE DRIVE CAP, UNTIL ONLY ONE HOLE REMAINS ABOVE THE GROUND OR FINISHED ELEVATION OF THE CONCRETE.
5. PUNCH OUT THE SIXTH KNOCKOUTS FROM THE BOTTOM OF THE SIGN POST.
6. SLIDE A MINIMUM OF 150 mm (6") OF THE SIGN POST INTO THE ANCHOR POST.
7. ATTACH THE SIGN POST TO THE ANCHOR POST WITH ONE M8 (5/16") CORNER BOLT AND NUT (OR ALTERNATELY ONE M10 (3/8") BOLT AND NUT) THROUGH THE TOP HOLE OF THE ANCHOR POST.
8. TIGHTEN THE BOLT AND NUT BY THE TURN-OF-NUT METHOD. BRING NUT TO A SNUG CONDITION TO ENSURE THAT ALL PARTS ARE BROUGHT TOGETHER INTO FULL CONTACT WITH EACH OTHER, THEN TIGHTEN AN ADDITIONAL 1/2 TURN.

INSTALLATION IN CONCRETE:

INSTALL AS NOTED ABOVE, BUT PLACE A 450 (18") LONG ANCHOR SLEEVE OUTSIDE THE ANCHOR POST SO THAT THE TOPS OF THE ANCHOR POST AND ANCHOR SLEEVE ARE EVEN. SELECT THE PROPER SIZE ANCHOR SLEEVE FROM THE SQUARE STEEL POSTS TABLE ON THIS SHEET.

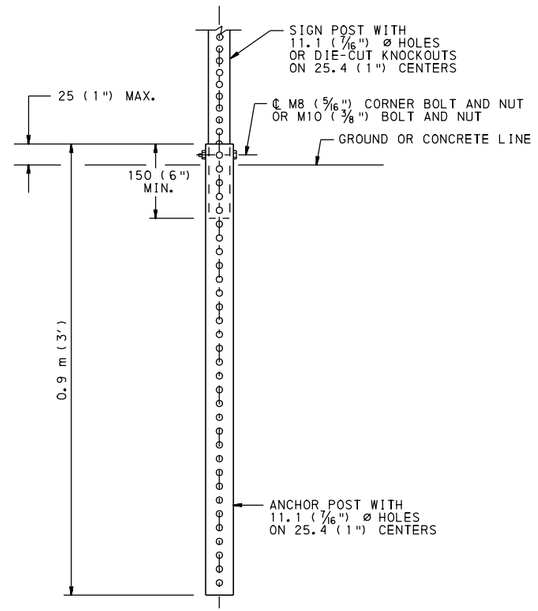

INSTALLATION DETAIL

NOTES:

1. MATERIALS AND WORKMANSHIP SHALL BE IN ACCORDANCE WITH PUB. 408.
2. SIGN POSTS AND SPLICE SLEEVES SHALL HAVE 11.1 mm (7/16") DIAMETER HOLES OR DIE-CUT KNOCKOUTS ON 25.4 mm (1") CENTERS ON ALL FOUR SIDES. ANCHOR POSTS AND ANCHOR SLEEVES SHALL HAVE 11.1 mm (7/16") DIAMETER HOLES ON 25.4 mm (1") CENTERS ON ALL FOUR SIDES.
3. BOLTS AND NUTS SHALL BE ASTM A 307, GRADE B.
4. DRIVE RIVETS MAY BE USED TO FASTEN SIGN BLANKS TO THE SIGN POST.
5. ALL DIMENSIONS ARE IN MILLIMETERS UNLESS OTHERWISE NOTED. ENGLISH UNITS IN PARENTHESIS ( ).
6. EITHER ALL METRIC OR ALL ENGLISH UNITS MUST BE USED ON PLANS. METRIC AND ENGLISH UNITS SHOWN MAY NOT BE MIXED.

COMMONWEALTH OF PENNSYLVANIA
DEPARTMENT OF TRANSPORTATION
BUREAU OF HIGHWAY SAFETY AND TRAFFIC ENGINEERING

POST-MOUNTED SIGNS, TYPE B

STEEL SQUARE POSTS (SYSTEM A) ERECTION DETAILS

RECOMMENDED MAY 25, 2007	RECOMMENDED MAY 25, 2007	SHT. 1 OF 9
Glen C. Rowe	m. Patel	
CHIEF, TRAFFIC ENGINEERING AND OPERATIONS DIVISION	CHIEF HIGHWAY ENGINEER	TC-8702B

SYSTEM A
ONE-POST INSTALLATION

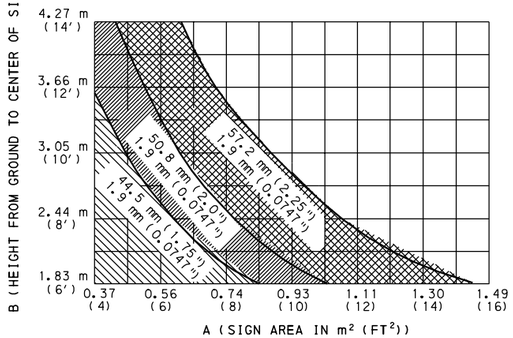

SYSTEM A
TWO-POST INSTALLATION
(SEE NOTE 2)

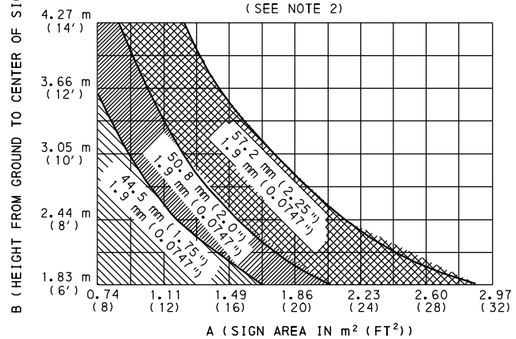

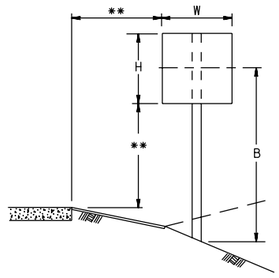

* WHEN ERECTING STANDARD WARNING OR REGULATORY SIGNS THAT ARE PREPUNCHED, THIS DISTANCE IS THE DISTANCE BETWEEN THE HORIZONTAL HOLES.

** SEE SHEET 9 OF 9 FOR SIGN LOCATION/INSTALLATION DETAILS.

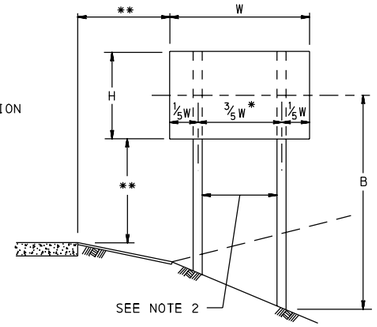

A = SIGN AREA (SEE TABLE).
A = W x H FOR SQUARE OR RECTANGULAR SIGNS,
WHERE: W = WIDTH OF SIGN
H = HEIGHT OF SIGN

METRIC UNITS

SIGN AREA TABLE

SQUARE OR RECTANGULAR SIGNS						IRREGULAR SHAPED SIGNS	
SIZE (mm x mm)	AREA (m^2)	SIZE (mm x mm)	AREA (m^2)	SIZE (mm x mm)	AREA (m^2)	SIGN (mm x mm)	AREA (m^2)
200x1200	0.24	750x375	0.28	1800x300	0.54	YIELD (R1-2) 900 x 900	0.35
300x450	0.14	750x600	0.45	1800x600	1.08	YIELD (R1-2) 1200 x 1200	0.62
300x600	0.18	750x750	0.56	1800x900	1.62	YIELD (R1-2) 1500 x 1500	0.97
300x750	0.22	750x900	0.68	1800x1200	2.16	NO PASSING PENNANT (W14-3)1200 x 900	0.50
300x900	0.27	750x1200	0.90	1800x1500	2.70	RAILROAD WARNING (W10-1) 900 DIA.	0.64
300x1200	0.36	750x1500	1.12	2400x600	1.44	SCHOOL (S1-1) 750 x 750	0.42
450x375	0.17	900x900	0.81	2400x1200	2.88	SCHOOL (S1-1) 900 x 900	0.61
450x450	0.20	900x1200	1.08	3000x300	0.90	STOP (R1-1)600 x 600	0.30
450x600	0.27	900x1350	1.22	3000x375	1.12	STOP (R1-1)750 x 750	0.47
450x900	0.40	1200x1200	1.44	3000x600	1.80	STOP (R1-1)900 x 900	0.67
450x1200	0.54	1200x1500	1.80	3000x750	2.25	STOP (R1-1)1200 x 1200	1.19
525x375	0.20	1500x300	0.45	3600x300	1.08	INTERSTATE ROUTE MARKER (M1-1) 600 x 600	0.29
600x600	0.36	1500x600	0.90	3600x450	1.62	INTERSTATE ROUTE MARKER (M1-1) 750 x 600	0.36
600x900	0.54	1500x1050	1.58	3600x600	2.16	INTERSTATE ROUTE MARKER (M1-1) 900 x 900	0.69
600x1200	0.72	1500x1500	2.25	3600x750	2.70	INTERSTATE ROUTE MARKER (M1-1) 1125 x 900	0.80

ENGLISH UNITS

SIGN AREA TABLE

SQUARE OR RECTANGULAR SIGNS						IRREGULAR SHAPED SIGNS	
SIZE (in. x in.)	AREA (FT^2)	SIZE (in. x in.)	AREA (FT^2)	SIZE (in. x in.)	AREA (FT^2)	SIGN (in. x in.)	AREA (FT^2)
8"x48"	2.7	30"x15"	3.1	72"x12"	6.0	YIELD (R1-2) 36"x36"	3.9
12"x18"	1.5	30"x24"	5.0	72"x24"	12.0	YIELD (R1-2) 48"x48"	6.9
12"x24"	2.0	30"x30"	6.3	72"x36"	18.0	YIELD (R1-2) 60"x60"	10.8
12"x30"	2.5	30"x36"	7.5	72"x48"	24.0	NO PASSING PENNANT (W14-3) 48"x36"	5.6
12"x36"	3.0	30"x48"	10.0	72"x60"	30.0	RAILROAD WARNING (W10-1) 36" DIA.	7.1
12"x48"	4.0	30"x60"	12.5	96"x24"	16.0	SCHOOL (S1-1) 30"x30"	4.7
18"x15"	1.9	36"x36"	9.0	96"x48"	32.0	SCHOOL (S1-1) 36"x36"	6.8
18"x18"	2.3	36"x48"	12.0	120"x12"	10.0	STOP (R1-1) 24"x24"	3.3
18"x24"	3.0	36"x54"	13.5	120"x15"	12.5	STOP (R1-1) 30"x30"	5.2
18"x36"	4.5	48"x48"	16.0	120"x24"	20.0	STOP (R1-1) 36"x36"	7.4
18"x48"	6.0	48"x60"	20.0	120"x30"	25.0	STOP (R1-1) 48"x48"	13.2
21"x15"	2.2	60"x12"	5.0	144"x12"	12.0	INTERSTATE ROUTE MARKER (M1-1) 24"x24"	3.2
24"x24"	4.0	60"x24"	10.0	144"x18"	18.0	INTERSTATE ROUTE MARKER (M1-1) 30"x24"	4.0
24"x36"	6.0	60"x42"	17.5	144"x24"	24.0	INTERSTATE ROUTE MARKER (M1-1) 36"x36"	7.2
24"x48"	8.0	60"x60"	25.0	144"x30"	30.0	INTERSTATE ROUTE MARKER (M1-1) 45"x36"	9.0

NOTES:

1. TO DETERMINE THE POST SIZE, ENTER THE GRAPH WITH THE VALUES OF A AND B. THE SHADED AREA INDICATES THE APPROPRIATE POST SIZE REQUIRED.
2. 57.2 mm (2.25") POSTS SHALL HAVE 2.1 m (7') CLEARANCE BETWEEN EACH OTHER, MEASURED FROM INSIDE POST EDGE TO INSIDE POST EDGE, WHEN USED IN TWO-POST INSTALLATIONS. 50.8 mm (2") AND 44.5 mm (1.75") POSTS MAY HAVE LESS THAN 2.1 m (7') CLEARANCE BETWEEN EACH OTHER WHEN USED IN TWO-POST INSTALLATIONS.
3. ALL DIMENSIONS ARE IN MILLIMETERS UNLESS OTHERWISE NOTED. ENGLISH UNITS IN PARENTHESIS ( ).
4. EITHER ALL METRIC OR ALL ENGLISH UNITS MUST BE USED ON PLANS. METRIC AND ENGLISH UNITS SHOWN MAY NOT BE MIXED.

COMMONWEALTH OF PENNSYLVANIA
DEPARTMENT OF TRANSPORTATION
BUREAU OF HIGHWAY SAFETY AND TRAFFIC ENGINEERING

POST-MOUNTED SIGNS, TYPE B

STEEL SQUARE POSTS (SYSTEM A) SELECTION TABLES

RECOMMENDED MAY 25, 2007	RECOMMENDED MAY 25, 2007	SHT. 2 OF 9
Glenn C Rowe	M. L. Patel	
CHIEF, TRAFFIC ENGINEERING AND OPERATIONS DIVISION	CHIEF HIGHWAY ENGINEER	TC-8702B

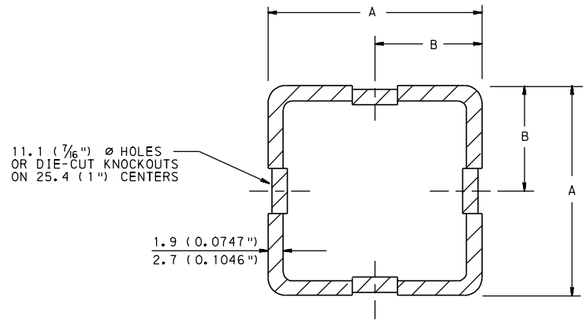

METRIC UNITS (mm)

SIGN POST				ANCHOR POST				ANCHOR SLEEVE *				SPLICE SLEEVE			
SIZE	DIMENSION		THICK.	SIZE	DIMENSION		THICK.	SIZE	DIMENSION		THICK.	SIZE	DIMENSION		THICK.
	A	B			A	B			A	B			A	B	
44.5	44.5	22.2	1.9	50.8	50.8	25.4	2.7	57.2	57.2	28.6	2.7	38.1	38.1	19.0	1.9
50.8	50.8	25.4	1.9	57.2	57.2	28.6	2.7	63.5	63.5	31.8	2.7	44.5	44.5	22.2	1.9

ENGLISH UNITS (INCHES)

SIGN POST				ANCHOR POST				ANCHOR SLEEVE *				SPLICE SLEEVE			
SIZE	DIMENSION		THICK.	SIZE	DIMENSION		THICK.	SIZE	DIMENSION		THICK.	SIZE	DIMENSION		THICK.
	A	B			A	B			A	B			A	B	
1.75"	1.75"	0.875"	0.0747"	2.00"	2.00"	1.000"	0.1046"	2.25"	2.25"	1.125"	0.1046"	1.50"	1.50"	0.750"	0.0747"
2.00"	2.00"	1.000"	0.0747"	2.25"	2.25"	1.125"	0.1046"	2.50"	2.50"	1.250"	0.1046"	1.75"	1.75"	0.875"	0.0747"

* REQUIRED FOR ALL POST INSTALLATIONS

SQUARE STEEL POSTS
SYSTEM C

1.9 mm (0.0747") - 415 MPa (60 KSI)
2.7 mm (0.1046") - 230 MPa (33 KSI)

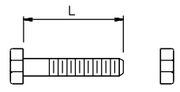

METRIC UNITS

SIGN POST SIZE (mm)	DIMENSION L (mm)
44.5	75
50.8	
57.2	90
63.5	

ENGLISH UNITS

SIGN POST SIZE (INCHES)	DIMENSION L (INCHES)
1.75	3.0
2.00	
2.25	3.5
2.50	

M10 x 1.5 (3/8" - 16 UNC)
ANCHOR BOLTS & NUTS

CADMIUM PLATED STEEL,
ZINC PLATED STEEL OR
ALUMINUM

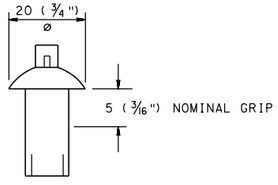

10 (3/8") DRIVE RIVET

CADMIUM PLATED STEEL,
ZINC PLATED STEEL OR
ALUMINUM

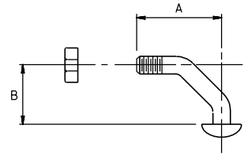

METRIC UNITS

SIGN POST SIZE (mm)	DIMENSION (mm)	
	A	B
44.5	34.13	24.61
50.8		
57.2	39.69	30.16
63.5		

ENGLISH UNITS

SIGN POST SIZE (INCHES)	DIMENSION (INCHES)	
	A	B
1.75	1.343	0.969
2.00		
2.25	1.562	1.188
2.50		

M8 x 1.25 (5/16"- 18 UNC)
CORNER BOLTS & NUTS

CADMIUM PLATED STEEL,
ZINC PLATED STEEL OR
ALUMINUM

INSTALLATION INSTRUCTIONS:

1. DETERMINE THE PROPER SIZE AND NUMBER OF SIGN POSTS FROM THE APPROPRIATE GRAPH ON SHEET 4 OF 9.
2. DETERMINE THE PROPER SIZE ANCHOR POST AND ANCHOR SLEEVE FROM THE SQUARE STEEL POSTS TABLE ON THIS SHEET.
3. DRIVE THE ANCHOR POST AND ANCHOR SLEEVE INTO THE GROUND SIMULTANEOUSLY, USING THE APPROPRIATE SIZE DRIVE CAP, UNTIL ONLY ONE HOLE REMAINS ABOVE THE GROUND OR FINISHED ELEVATION OF THE CONCRETE.
4. SLIDE A MINIMUM OF 150 mm (6") OF THE SIGN POST INTO THE ANCHOR POST.
5. ATTACH THE SIGN POST TO THE ANCHOR POST AND SLEEVE WITH ONE M8 (5/16") CORNER BOLT AND NUT (OR ALTERNATELY ONE M10 (3/8") BOLT AND NUT) THROUGH THE TOP HOLE OF THE ANCHOR POST AND SLEEVE.
6. TIGHTEN THE BOLT AND NUT BY THE TURN-OF-NUT METHOD. BRING NUT TO A SNUG CONDITION TO ENSURE THAT ALL PARTS ARE BROUGHT TOGETHER INTO FULL CONTACT WITH EACH OTHER, THEN TIGHTEN AN ADDITIONAL 1/2 TURN.

INSTALLATION IN CONCRETE:

INSTALL AS NOTED ABOVE.

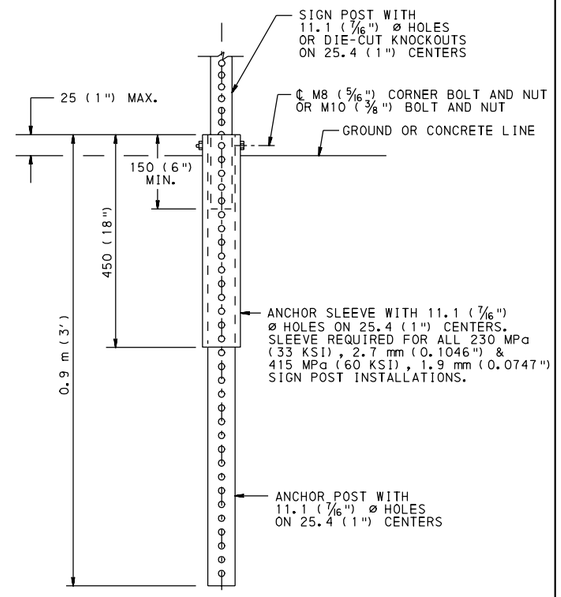

INSTALLATION DETAIL

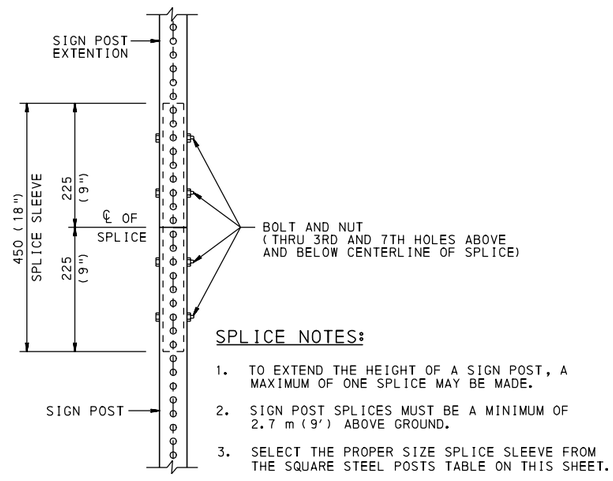

SPLICE NOTES:

1. TO EXTEND THE HEIGHT OF A SIGN POST, A MAXIMUM OF ONE SPLICE MAY BE MADE.
2. SIGN POST SPLICES MUST BE A MINIMUM OF 2.7 m (9') ABOVE GROUND.
3. SELECT THE PROPER SIZE SPLICE SLEEVE FROM THE SQUARE STEEL POSTS TABLE ON THIS SHEET.

SPLICE DETAIL

NOTES:

1. MATERIALS AND WORKMANSHIP SHALL BE IN ACCORDANCE WITH PUB. 408.
2. SIGN POSTS AND SPLICE SLEEVES SHALL HAVE 11.1 mm (7/16") DIAMETER HOLES OR DIE-CUT KNOCKOUTS ON 25.4 mm (1") CENTERS ON ALL FOUR SIDES. ANCHOR POSTS AND ANCHOR SLEEVES SHALL HAVE 11.1 mm (7/16") DIAMETER HOLES ON 25.4 mm (1") CENTERS ON ALL FOUR SIDES.
3. BOLTS AND NUTS SHALL BE ASTM A 307, GRADE B.
4. DRIVE RIVETS MAY BE USED TO FASTEN SIGN BLANKS TO THE SIGN POST.
5. ALL DIMENSIONS ARE IN MILLIMETERS UNLESS OTHERWISE NOTED. ENGLISH UNITS IN PARENTHESIS ( ).
6. EITHER ALL METRIC OR ALL ENGLISH UNITS MUST BE USED ON PLANS. METRIC AND ENGLISH UNITS SHOWN MAY NOT BE MIXED.

COMMONWEALTH OF PENNSYLVANIA
DEPARTMENT OF TRANSPORTATION
BUREAU OF HIGHWAY SAFETY AND TRAFFIC ENGINEERING

POST-MOUNTED SIGNS, TYPE B

STEEL SQUARE POSTS (SYSTEM C) ERECTION DETAILS

RECOMMENDED MAY 25, 2007	RECOMMENDED MAY 25, 2007	SHT. 3 OF 9
Glenn C Rowe	M. E. Patel	
CHIEF, TRAFFIC ENGINEERING AND OPERATIONS DIVISION	CHIEF HIGHWAY ENGINEER	TC-8702B

SYSTEM C
ONE-POST INSTALLATION

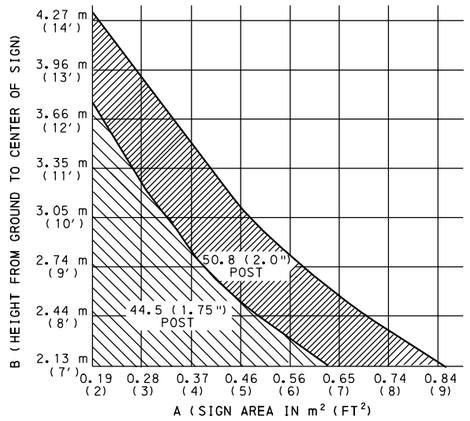

SYSTEM C
TWO-POST INSTALLATION

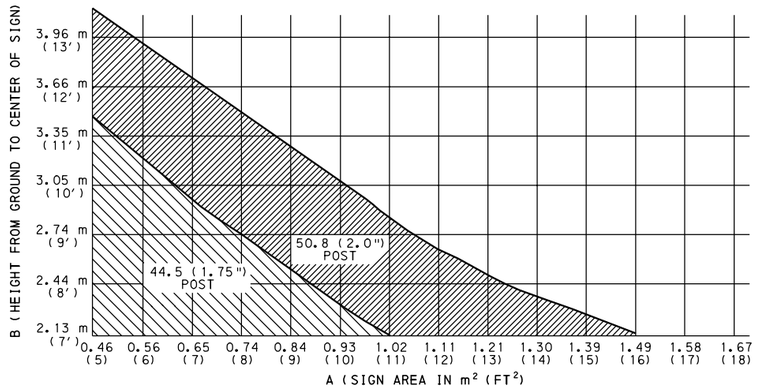

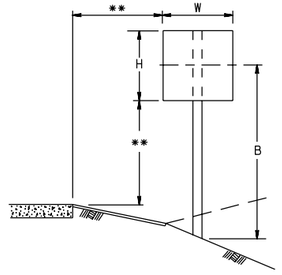

* WHEN ERECTING STANDARD WARNING OR REGULATORY SIGNS THAT ARE PREPUNCHED, THIS DISTANCE IS THE DISTANCE BETWEEN THE HORIZONTAL HOLES.

** SEE SHEET 9 OF 9 FOR SIGN LOCATION/INSTALLATION DETAILS.

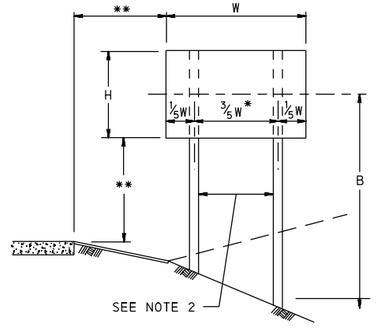

A = SIGN AREA (SEE TABLE).
A = W x H FOR SQUARE OR RECTANGULAR SIGNS,
WHERE: W = WIDTH OF SIGN
H = HEIGHT OF SIGN

METRIC UNITS

SIGN AREA TABLE

SQUARE OR RECTANGULAR SIGNS						IRREGULAR SHAPED SIGNS	
SIZE (mm x mm)	AREA (m²)	SIZE (mm x mm)	AREA (m²)	SIZE (mm x mm)	AREA (m²)	SIGN (mm x mm)	AREA (m²)
200x1200	0.24	750x375	0.28	1800x300	0.54	YIELD (R1-2) 900 x 900	0.35
300x450	0.14	750x600	0.45	1800x600	1.08	YIELD (R1-2) 1200 x 1200	0.62
300x600	0.18	750x750	0.56	1800x900	1.62	YIELD (R1-2) 1500 x 1500	0.97
300x750	0.22	750x900	0.68	1800x1200	2.16	NO PASSING PENNANT (W14-3) 1200 x 900	0.50
300x900	0.27	750x1200	0.90	1800x1500	2.70	RAILROAD WARNING (W10-1) 900 DIA.	0.64
300x1200	0.36	750x1500	1.12	2400x600	1.44	SCHOOL (S1-1) 750 x 750	0.42
450x375	0.17	900x900	0.81	2400x1200	2.88	SCHOOL (S1-1) 900 x 900	0.61
450x450	0.20	900x1200	1.08	3000x300	0.90	STOP (R1-1) 600 x 600	0.30
450x600	0.27	900x1350	1.22	3000x375	1.12	STOP (R1-1) 750 x 750	0.47
450x900	0.40	1200x1200	1.44	3000x600	1.80	STOP (R1-1) 900 x 900	0.67
450x1200	0.54	1200x1500	1.80	3000x750	2.25	STOP (R1-1) 1200 x 1200	1.19
525x375	0.20	1500x300	0.45	3600x300	1.08	INTERSTATE ROUTE MARKER (M1-1) 600 x 600	0.29
600x600	0.36	1500x600	0.90	3600x450	1.62	INTERSTATE ROUTE MARKER (M1-1) 750 x 600	0.36
600x900	0.54	1500x1050	1.58	3600x600	2.16	INTERSTATE ROUTE MARKER (M1-1) 900 x 900	0.69
600x1200	0.72	1500x1500	2.25	3600x750	2.70	INTERSTATE ROUTE MARKER (M1-1) 1125 x 900	0.80

ENGLISH UNITS

SIGN AREA TABLE

SQUARE OR RECTANGULAR SIGNS						IRREGULAR SHAPED SIGNS	
SIZE (in. x in.)	AREA (FT²)	SIZE (in. x in.)	AREA (FT²)	SIZE (in. x in.)	AREA (FT²)	SIGN (in. x in.)	AREA (FT²)
8"x48"	2.7	30"x15"	3.1	72"x12"	6.0	YIELD (R1-2) 36"x36"	3.9
12"x18"	1.5	30"x24"	5.0	72"x24"	12.0	YIELD (R1-2) 48"x48"	6.9
12"x24"	2.0	30"x30"	6.3	72"x36"	18.0	YIELD (R1-2) 60"x60"	10.8
12"x30"	2.5	30"x36"	7.5	72"x48"	24.0	NO PASSING PENNANT (W14-3) 48"x36"	5.6
12"x36"	3.0	30"x48"	10.0	72"x60"	30.0	RAILROAD WARNING (W10-1) 36" DIA.	7.1
12"x48"	4.0	30"x60"	12.5	96"x24"	16.0	SCHOOL (S1-1) 30"x30"	4.7
18"x15"	1.9	36"x36"	9.0	96"x48"	32.0	SCHOOL (S1-1) 36"x36"	6.8
18"x18"	2.3	36"x48"	12.0	120"x12"	10.0	STOP (R1-1) 24"x24"	3.3
18"x24"	3.0	36"x54"	13.5	120"x15"	12.5	STOP (R1-1) 30"x30"	5.2
18"x36"	4.5	48"x48"	16.0	120"x24"	20.0	STOP (R1-1) 36"x36"	7.4
18"x48"	6.0	48"x60"	20.0	120"x30"	25.0	STOP (R1-1) 48"x48"	13.2
21"x15"	2.2	60"x12"	5.0	144"x12"	12.0	INTERSTATE ROUTE MARKER (M1-1) 24"x24"	3.2
24"x24"	4.0	60"x24"	10.0	144"x18"	18.0	INTERSTATE ROUTE MARKER (M1-1) 30"x24"	4.0
24"x36"	6.0	60"x42"	17.5	144"x24"	24.0	INTERSTATE ROUTE MARKER (M1-1) 36"x36"	7.2
24"x48"	8.0	60"x60"	25.0	144"x30"	30.0	INTERSTATE ROUTE MARKER (M1-1) 45"x36"	9.0

NOTES:

1. TO DETERMINE THE POST SIZE, ENTER THE GRAPH WITH THE VALUES OF A AND B. THE SHADED AREA INDICATES THE APPROPRIATE POST SIZE REQUIRED.
2. 50.8 mm (2") AND 44.5 mm (1.75") POSTS MAY HAVE LESS THAN 2.1 m (7') CLEARANCE BETWEEN EACH OTHER WHEN USED IN TWO-POST INSTALLATIONS.
3. ALL DIMENSIONS ARE IN MILLIMETERS UNLESS OTHERWISE NOTED. ENGLISH UNITS IN PARENTHESIS ( ).
4. EITHER ALL METRIC OR ALL ENGLISH UNITS MUST BE USED ON PLANS. METRIC AND ENGLISH UNITS SHOWN MAY NOT BE MIXED.

COMMONWEALTH OF PENNSYLVANIA
DEPARTMENT OF TRANSPORTATION
BUREAU OF HIGHWAY SAFETY AND TRAFFIC ENGINEERING

POST-MOUNTED SIGNS, TYPE B

STEEL SQUARE POSTS (SYSTEM C) SELECTION TABLES

RECOMMENDED MAY 25, 2007
Glenn C Rowe
CHIEF, TRAFFIC ENGINEERING AND OPERATIONS DIVISION

RECOMMENDED MAY 25, 2007
M. C. Patel
CHIEF HIGHWAY ENGINEER

SHT. 4 OF 9

TC-8702B

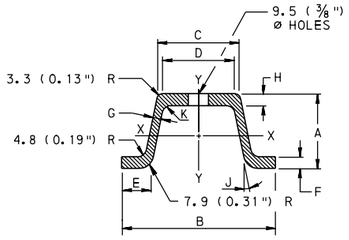

METRIC UNITS

STEEL POST DIMENSIONS										
* WEIGHT kg/m	DIMENSIONS (MILLIMETERS)									
	A	B	C	D	E	F	G	H	J	K
3.71	39.6	79.5	31.8	26.9	16.0	4.1	3.3	3.8	12.5°	3.3 R
5.94	44.4	88.9	42.4	35.8	18.3	6.4	4.6	5.8	11.5°	4.8 R

ENGLISH UNITS

STEEL POST DIMENSIONS										
* WEIGHT LBS/FT.	DIMENSIONS (INCHES)									
	A	B	C	D	E	F	G	H	J	K
2.5	1.56	3.13	1.25	1.06	0.63	0.16	0.13	0.15	12.5°	0.13 R
4.0	1.75	3.50	1.67	1.41	0.72	0.25	0.18	0.23	11.5°	0.19 R

* ±3.5%

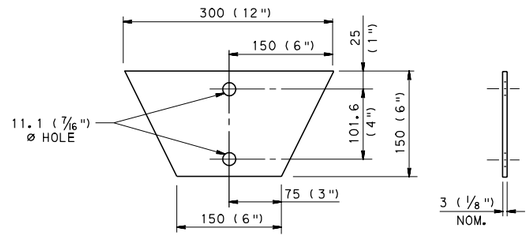

ANCHOR PLATE

NOTES:

1. MATERIALS AND WORKMANSHIP SHALL BE IN ACCORDANCE WITH PUB.408.
2. FORMED-CHANNEL SIGN MOUNTS SHALL BE MILD STEEL.
3. ANCHOR BOLTS SHALL BE 7.94 mm (5/16") - 18 UNC x 38 (1.5") FULLY THREADED, GRADE 9 HEX HEAD. A FLANGED ANCHOR BOLT MAY BE SUBSTITUTED FOR THE STANDARD ANCHOR BOLT AND FLAT WASHER.
4. WASHERS SHALL BE 7.94 mm (5/16") GRADE 9 PLATED.
5. LOCKNUTS SHALL BE 7.94 mm (5/16") - 18 UNC THREADS, HEX HEADED.
6. ANY OTHER DEPARTMENT APPROVED BREAKAWAY CONNECTION APPROVED FOR THIS KIND OF POST MAY BE SUBSTITUTED FOR THE UNIVERSAL SPACER.
7. SEE SHEET 6 OF 9 FOR SPACER AND ANCHOR BOLT DETAILS.
8. ALL DIMENSIONS ARE IN MILLIMETERS UNLESS OTHERWISE NOTED. ENGLISH UNITS IN PARENTHESIS ( ).
9. EITHER ALL METRIC OR ALL ENGLISH UNITS MUST BE USED ON PLANS. METRIC AND ENGLISH UNITS SHOWN MAY NOT BE MIXED.

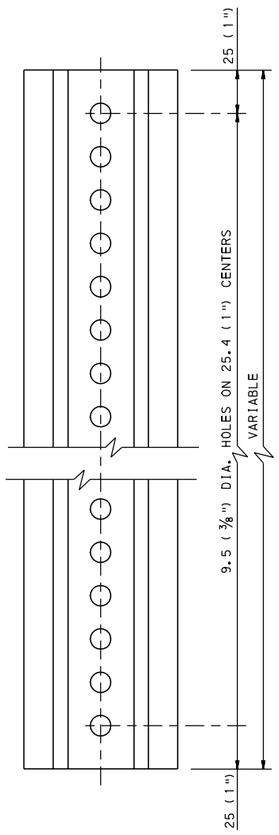

SIGN POST

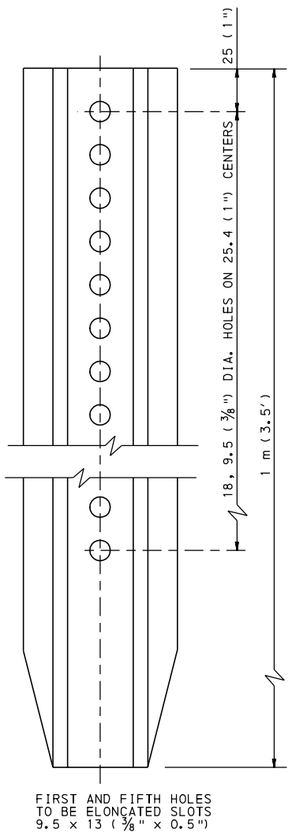

FIRST AND FIFTH HOLES TO BE ELONGATED SLOTS 9.5 x 13 (3/8" x 0.5")

ANCHOR POST

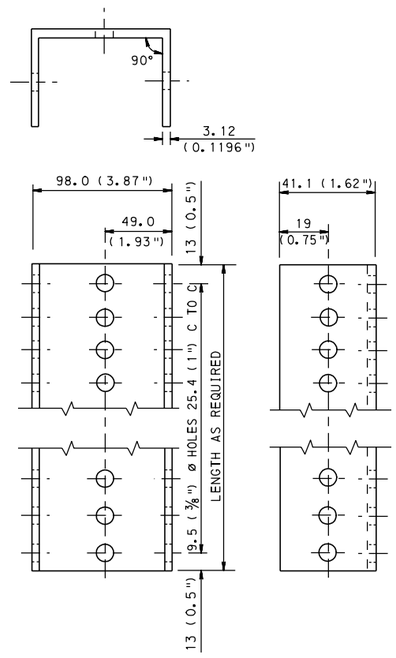

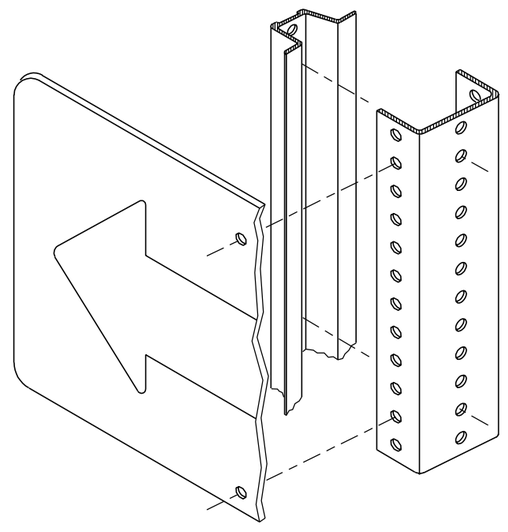

FORMED-CHANNEL SIGN MOUNT

USE WHEN IT IS NECESSARY TO MOUNT SIGNS ON THE SIDE OF A CHANNEL BAR POST IN ADDITION TO THE NORMAL SIGN MOUNTING LOCATION ON THE FLANGED FACE.

COMMONWEALTH OF PENNSYLVANIA
DEPARTMENT OF TRANSPORTATION
BUREAU OF HIGHWAY SAFETY AND TRAFFIC ENGINEERING

POST-MOUNTED SIGNS, TYPE B

CHANNEL BAR POSTS (ROLLED STEEL RAILS) MATERIAL DETAILS

RECOMMENDED MAY 25, 2007	RECOMMENDED MAY 25, 2007	SHT. 5 OF 9
Glen C Rowe	M. C. Patel	
CHIEF, TRAFFIC ENGINEERING AND OPERATIONS DIVISION	CHIEF HIGHWAY ENGINEER	TC-8702B

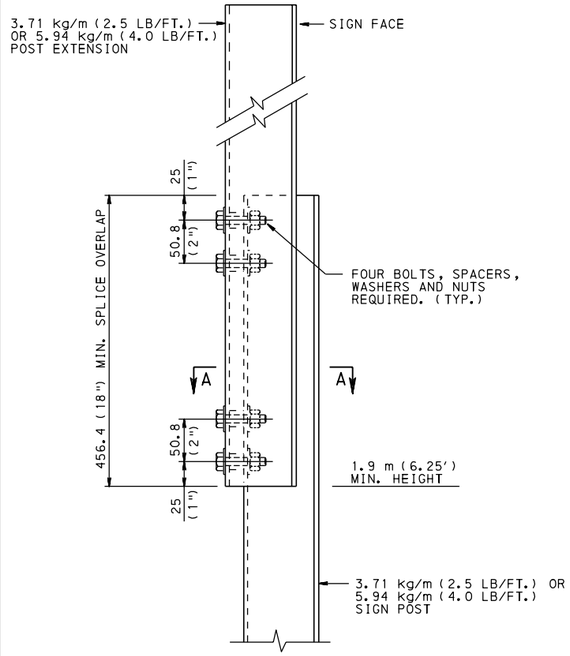

POST EXTENSION SPLICE DETAIL A

FOR USE IN EXTENDING SIGN POSTS

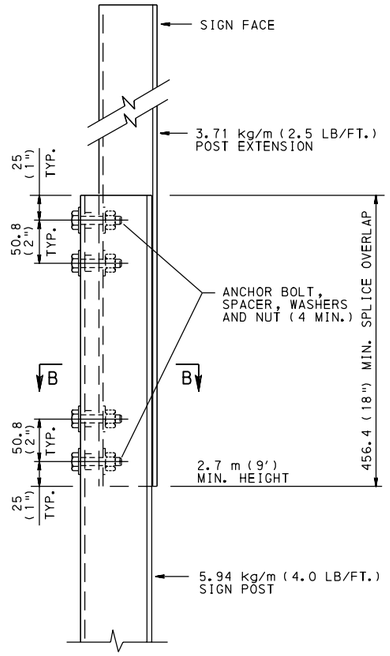

ALTERNATE POST EXTENSION SPLICE DETAIL B

FOR USE IN EXTENDING SIGN POSTS

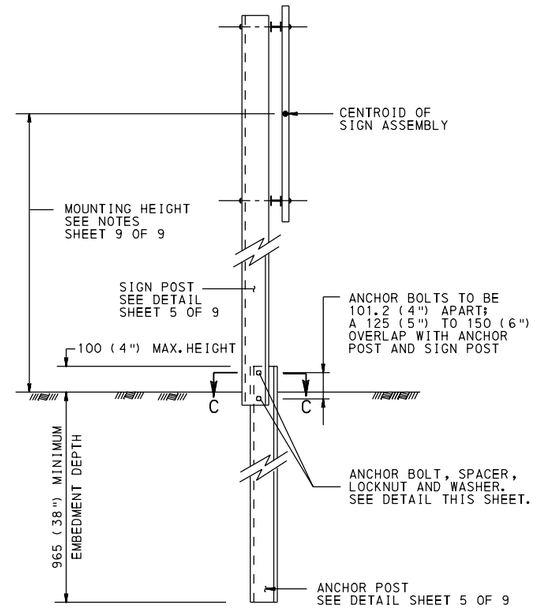

INSTALLATION DETAIL

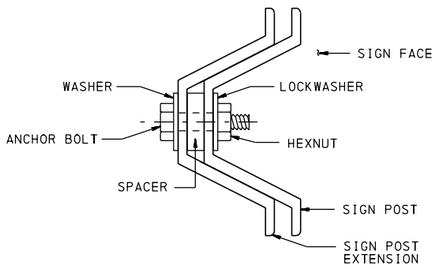

SECTION A-A

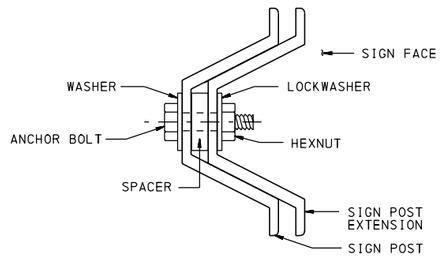

SECTION B-B

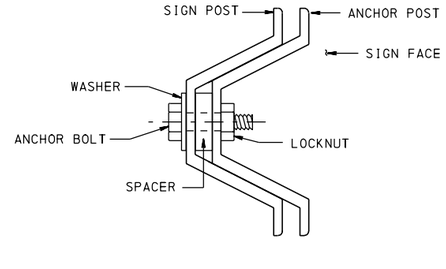

SECTION C-C

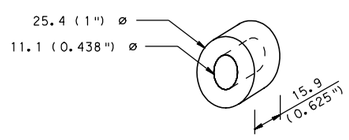

SPACER DETAIL

ZINC PLATED

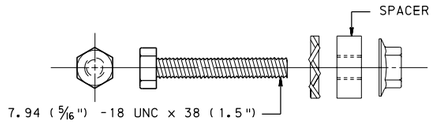

ANCHOR BOLT, WASHER, SPACER AND LOCKNUT

ANCHOR BOLTS TO BE 38 (1.5"), GRADE 9, HEX HEAD.

ANCHOR SPLICE INSTALLATION INSTRUCTIONS:

1. DETERMINE THE PROPER SIZE SIGN POST AND ANCHOR POST FROM THE APPROPRIATE GRAPH ON SHEET 7 OF 9. USE 3.71 kg/m (2.5 LB/FT.) ANCHOR POSTS WITH 3.71 kg/m (2.5 LB/FT.) SIGN POSTS AND 5.94 kg/m (4.0 LB/FT.) ANCHOR POSTS WITH 5.94 kg/m (4.0 LB/FT.) SIGN POSTS.
2. REMOVE A SHOVEL OF SOIL AT THE POST LOCATION TO ALLOW FOR FINAL ATTACHMENT OF THE SIGN POST TO THE ANCHOR POST.
3. DRIVE ANCHOR POST WITH A DRIVE CAP TO WITHIN APPROXIMATELY 300 mm (12") ABOVE GROUND LEVEL. PLACE ONE BOLT AND WASHER IN FIFTH HOLE FROM THE END OF THE EXPOSED ANCHOR POST. SECURELY TIGHTEN SPACER ONTO BOLT.
4. DRIVE ANCHOR POST TO 100 mm (4") ABOVE GROUND LEVEL. PLACE REMAINING BOLT AND WASHER IN FIRST HOLE FROM THE END OF POST AND SECURELY TIGHTEN SPACER ONTO BOLT. (BOLTS 101.6 mm (4") APART).
5. NEST TOP SIGN POST OVER PROTRUDING ANCHOR POST BOLTS THROUGH FIRST AND FIFTH HOLES OF TOP SIGN POST. THIS WILL RESULT IN A 125 mm (5") TO 150 mm (6") OVERLAP.
6. PLACE A LOCKNUT ON EACH BOLT (A STANDARD LOCKWASHER AND NUT MAY BE USED IN LIEU OF THE LOCKNUT). TIGHTEN BOLTS AND NUTS BY TURN-OF-NUT METHOD. BRING NUT TO A SNUG TIGHT CONDITION TO ENSURE THAT ALL PARTS ARE BROUGHT TOGETHER INTO FULL CONTACT WITH EACH OTHER, THEN TIGHTEN AN ADDITIONAL ½ TURN.
7. RESTORE SOIL AROUND THE ANCHOR POST.

INSTALLATION IN SOFT SOIL:

1. USE THE ANCHOR PLATE IN AREAS WITH SOFT SOIL. BOLT THE TOP ANCHOR BOLT 25.4 mm (1") BELOW THE BOTTOM ANCHOR POST BOLT, (6 TO 7 HOLES FROM THE END OF THE ANCHOR POST).

POST EXTENSION SPLICE NOTES:

1. TO EXTEND THE HEIGHT OF A SIGN POST, A MAXIMUM OF ONE SPLICE MAY BE MADE.
2. FOUR ANCHOR BOLTS WITH SPACERS, WASHERS, LOCKWASHERS AND NUTS ARE REQUIRED (LOCKNUTS MAY BE USED IN LIEU OF STANDARD LOCKWASHERS AND NUTS). SEE THIS SHEET FOR ANCHOR BOLT SYSTEM.
3. POST EXTENSION SPLICE DETAIL A IS PREFERRED OVER POST EXTENSION SPLICE DETAIL B. WHEN DETAIL A IS USED, 3.71 kg/m (2.5 LB/FT.) POSTS SHALL USE A 3.71 kg/m (2.5 LB/FT.) POST EXTENSION POST FOR SPLICE EXTENSIONS; 5.94 kg/m (4.0 LB/FT.) POSTS SHALL USE A 5.94 kg/m (4.0 LB/FT.) POST EXTENSION POST FOR SPLICE EXTENSIONS. WHEN DETAIL A IS USED, POST EXTENSION SPLICES SHALL BE MOUNTED ON THE BACK (NON-IMPACT) SIDE OF THE SIGN POST. SPLICES SHALL BE MADE AT A MINIMUM HEIGHT OF 1.9 m (6.25'), MEASURED TO THE BOTTOM OF THE SPLICE.
4. POST EXTENSION SPLICE DETAIL B IS PERMITTED FOR USE TO PROVIDE A FLUSH SIGN MOUNT SURFACE FOR 5.94 kg/m (4.0 LB/FT.) POSTS. WHEN DETAIL B IS USED, 3.71 kg/m (2.5 LB/FT.) POST EXTENSION SPLICES MAY BE NESTED ON THE FRONT OF A 5.94 kg/m (4.0 LB/FT.) POST. SPLICES SHALL BE MADE AT A MINIMUM HEIGHT OF 2.7 m (9'), MEASURED TO THE BOTTOM OF THE SPLICE.

NOTES:

1. ALL DIMENSIONS ARE IN MILLIMETERS UNLESS OTHERWISE NOTED. ENGLISH UNITS IN PARENTHESIS ( ).
2. EITHER ALL METRIC OR ALL ENGLISH UNITS MUST BE USED ON PLANS. METRIC AND ENGLISH UNITS SHOWN MAY NOT BE MIXED.

COMMONWEALTH OF PENNSYLVANIA
DEPARTMENT OF TRANSPORTATION
BUREAU OF HIGHWAY SAFETY AND TRAFFIC ENGINEERING

POST-MOUNTED SIGNS, TYPE B

CHANNEL BAR POSTS ERECTION DETAILS

RECOMMENDED MAY 25, 2007	RECOMMENDED MAY 25, 2007	SHT. 6 OF 9
Glenn C. Rowe	M. L. Patel	
CHIEF, TRAFFIC ENGINEERING AND OPERATIONS DIVISION	CHIEF HIGHWAY ENGINEER	TC-8702B

ONE-POST INSTALLATION

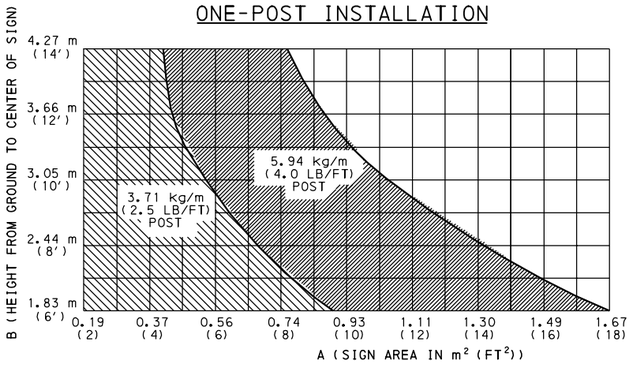

TWO-POST INSTALLATION

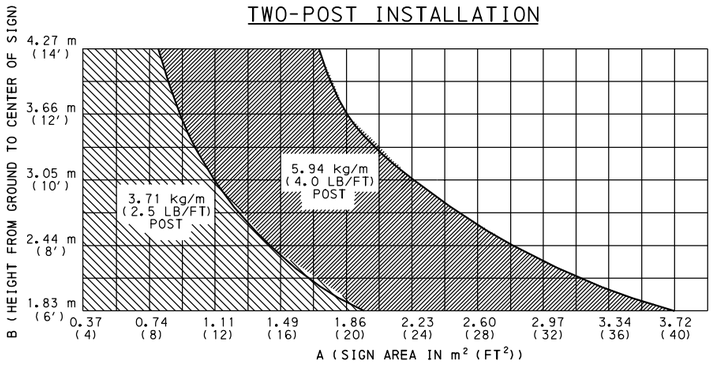

THREE-POST INSTALLATION

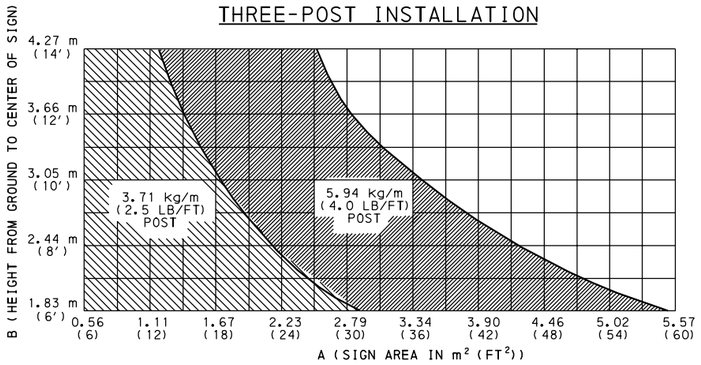

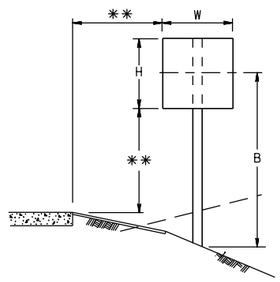

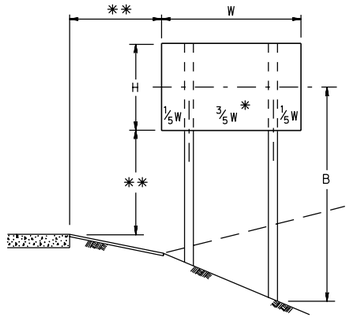

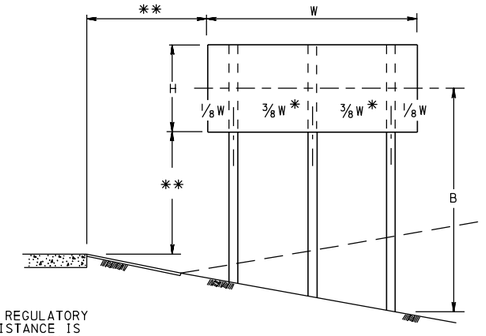

A = SIGN AREA (SEE TABLE).
A = W x H FOR SQUARE OR RECTANGULAR SIGNS,
WHERE: W = WIDTH OF SIGN
H = HEIGHT OF SIGN

* WHEN ERECTING STANDARD WARNING OR REGULATORY SIGNS THAT ARE PREPUNCHED, THIS DISTANCE IS THE DISTANCE BETWEEN THE HORIZONTAL HOLES.

** SEE SHEET 9 OF 9 FOR SIGN LOCATION/INSTALLATION DETAILS.

METRIC UNITS

SIGN AREA TABLE

SQUARE OR RECTANGULAR SIGNS						IRREGULAR SHAPED SIGNS	
SIZE (mm x mm)	AREA (m^2)	SIZE (mm x mm)	AREA (m^2)	SIZE (mm x mm)	AREA (m^2)	SIGN (mm x mm)	AREA (m^2)
200x1200	0.24	750x375	0.28	1800x300	0.54	YIELD (R1-2) 900 x 900	0.35
300x450	0.14	750x600	0.45	1800x600	1.08	YIELD (R1-2) 1200 x 1200	0.62
300x600	0.18	750x750	0.56	1800x900	1.62	YIELD (R1-2) 1500 x 1500	0.97
300x750	0.22	750x900	0.68	1800x1200	2.16	NO PASSING PENNANT (W14-3)1200 x 900	0.50
300x900	0.27	750x1200	0.90	1800x1500	2.70	RAILROAD WARNING (W10-1) 900 DIA.	0.64
300x1200	0.36	750x1500	1.12	2400x600	1.44	SCHOOL (S1-1) 750 x 750	0.42
450x375	0.17	900x900	0.81	2400x1200	2.88	SCHOOL (S1-1) 900 x 900	0.61
450x450	0.20	900x1200	1.08	3000x300	0.90	STOP (R1-1)600 x 600	0.30
450x600	0.27	900x1350	1.22	3000x375	1.12	STOP (R1-1)750 x 750	0.47
450x900	0.40	1200x1200	1.44	3000x600	1.80	STOP (R1-1)900 x 900	0.67
450x1200	0.54	1200x1500	1.80	3000x750	2.25	STOP (R1-1)1200 x 1200	1.19
525x375	0.20	1500x300	0.45	3600x300	1.08	INTERSTATE ROUTE MARKER (M1-1) 600 x 600	0.29
600x600	0.36	1500x600	0.90	3600x450	1.62	INTERSTATE ROUTE MARKER (M1-1) 750 x 600	0.36
600x900	0.54	1500x1050	1.58	3600x600	2.16	INTERSTATE ROUTE MARKER (M1-1) 900 x 900	0.69
600x1200	0.72	1500x1500	2.25	3600x750	2.70	INTERSTATE ROUTE MARKER (M1-1) 1125 x 900	0.80

ENGLISH UNITS

SIGN AREA TABLE

SQUARE OR RECTANGULAR SIGNS						IRREGULAR SHAPED SIGNS	
SIZE (in. x in.)	AREA (FT^2)	SIZE (in. x in.)	AREA (FT^2)	SIZE (in. x in.)	AREA (FT^2)	SIGN (in. x in.)	AREA (FT^2)
8"x48"	2.7	30"x15"	3.1	72"x12"	6.0	YIELD (R1-2) 36"x36"	3.9
12"x18"	1.5	30"x24"	5.0	72"x24"	12.0	YIELD (R1-2) 48"x48"	6.9
12"x24"	2.0	30"x30"	6.3	72"x36"	18.0	YIELD (R1-2) 60"x60"	10.8
12"x30"	2.5	30"x36"	7.5	72"x48"	24.0	NO PASSING PENNANT (W14-3) 48"x36"	5.6
12"x36"	3.0	30"x48"	10.0	72"x60"	30.0	RAILROAD WARNING (W10-1) 36" DIA.	7.1
12"x48"	4.0	30"x60"	12.5	96"x24"	16.0	SCHOOL (S1-1) 30"x30"	4.7
18"x15"	1.9	36"x36"	9.0	96"x48"	32.0	SCHOOL (S1-1) 36"x36"	6.8
18"x18"	2.3	36"x48"	12.0	120"x12"	10.0	STOP (R1-1) 24"x24"	3.3
18"x24"	3.0	36"x54"	13.5	120"x15"	12.5	STOP (R1-1) 30"x30"	5.2
18"x36"	4.5	48"x48"	16.0	120"x24"	20.0	STOP (R1-1) 36"x36"	7.4
18"x48"	6.0	48"x60"	20.0	120"x30"	25.0	STOP (R1-1) 48"x48"	13.2
21"x15"	2.2	60"x12"	5.0	144"x12"	12.0	INTERSTATE ROUTE MARKER (M1-1) 24"x24"	3.2
24"x24"	4.0	60"x24"	10.0	144"x18"	18.0	INTERSTATE ROUTE MARKER (M1-1) 30"x24"	4.0
24"x36"	6.0	60"x42"	17.5	144"x24"	24.0	INTERSTATE ROUTE MARKER (M1-1) 36"x36"	7.2
24"x48"	8.0	60"x60"	25.0	144"x30"	30.0	INTERSTATE ROUTE MARKER (M1-1) 45"x36"	9.0

NOTES:

1. TO DETERMINE THE POST SIZE, ENTER THE GRAPH WITH THE VALUES OF A AND B. THE SHADED AREA INDICATES THE APPROPRIATE POST SIZE REQUIRED.
2. 3.71 Kg/m (2.5 LB/FT.) AND 5.94 Kg/m (4.0 LB/FT.) POSTS MAY HAVE LESS THAN 2.1 m (7') CLEARANCE BETWEEN EACH OTHER WHEN USED IN TWO-POST AND THREE-POST INSTALLATIONS.
3. ALL DIMENSIONS ARE IN MILLIMETERS UNLESS OTHERWISE NOTED. ENGLISH UNITS IN PARENTHESIS ( ).
4. EITHER ALL METRIC OR ALL ENGLISH UNITS MUST BE USED ON PLANS. METRIC AND ENGLISH UNITS SHOWN MAY NOT BE MIXED.

COMMONWEALTH OF PENNSYLVANIA
DEPARTMENT OF TRANSPORTATION
BUREAU OF HIGHWAY SAFETY AND TRAFFIC ENGINEERING

POST-MOUNTED SIGNS, TYPE B

CHANNEL BAR POSTS SELECTION TABLES

RECOMMENDED MAY 25, 2007	RECOMMENDED MAY 25, 2007	SHT. 7 OF 9
Glenn C Rowe	M. G. Patel	
CHIEF, TRAFFIC ENGINEERING AND OPERATIONS DIVISION	CHIEF HIGHWAY ENGINEER	TC-8702B

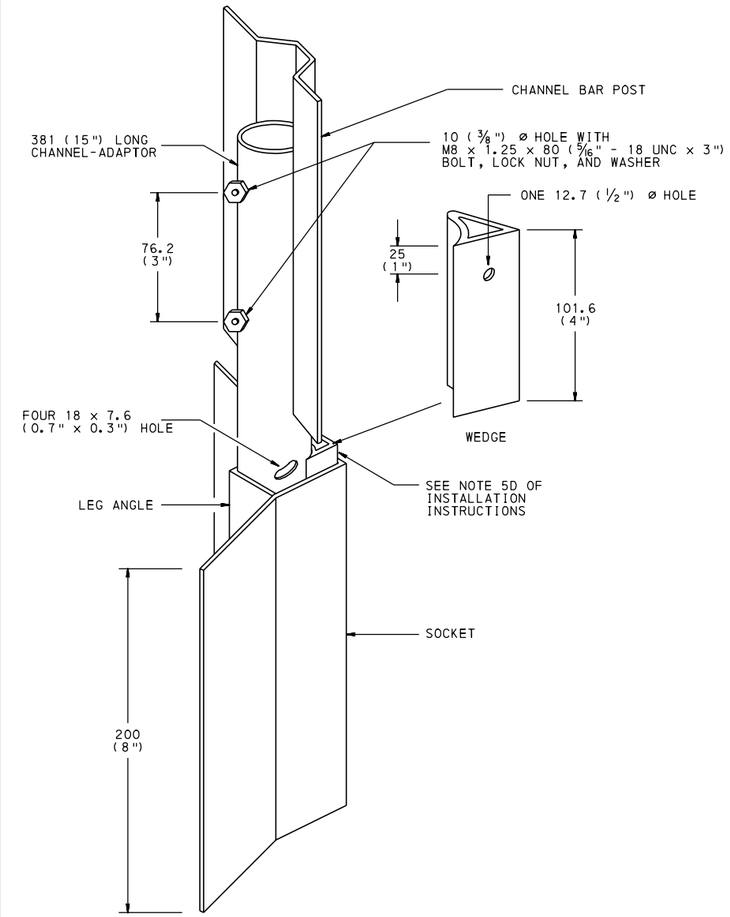

ELEVATION

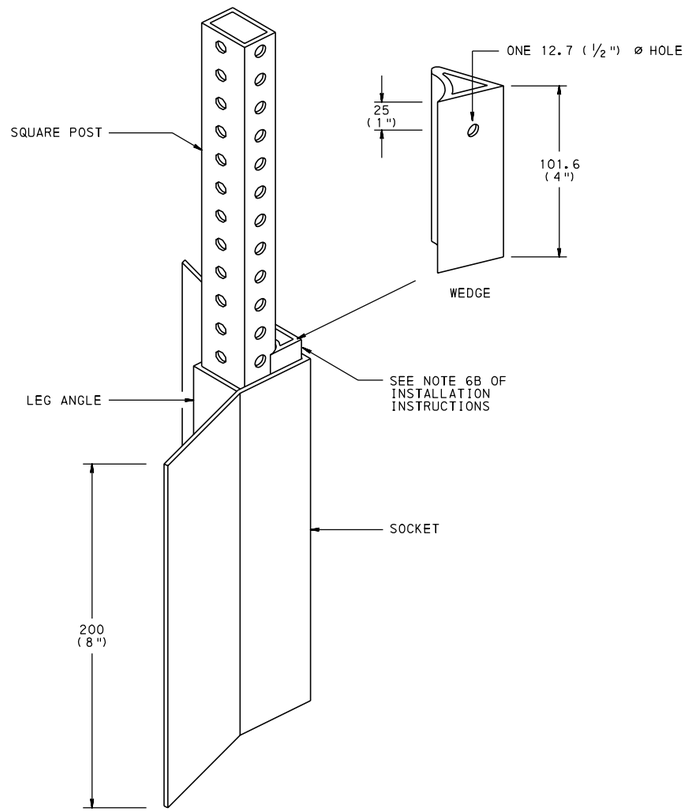

ELEVATION

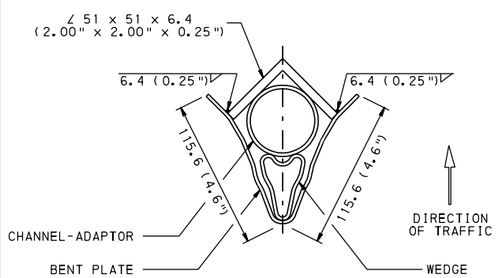

PLAN

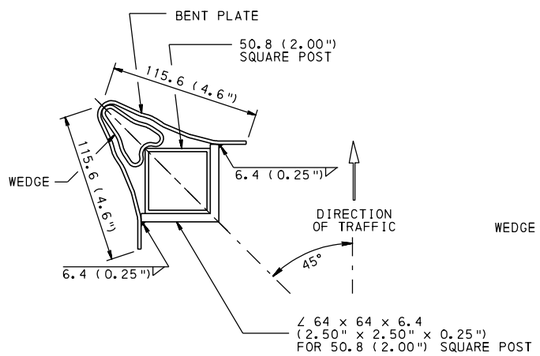

PLAN

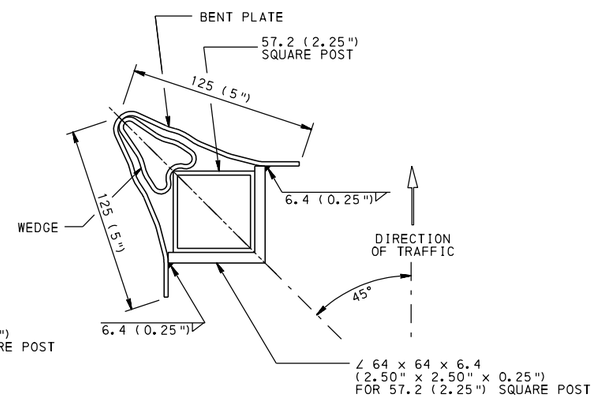

PLAN

CHANNEL BAR POST - SOCKET SYSTEM

SQUARE POST - SOCKET SYSTEM

NOTES:

1. SOCKET SHALL CONSIST OF A BENT PLATE ATTACHED TO A LEG ANGLE BY A MINIMUM OF SIX, 6.4 mm x 38.1 mm (0.25" x 1.5") FILLET WELDS. THE TOP OF THE BENT PLATE SHALL BE FLUSH WITH THE TOP OF THE LEG ANGLE.
2. SOCKET TO BE DIP-COATED WITH A RUST INHIBITING PRIMER MEETING FED. SPEC. TTP636.
3. BENT PLATE SHALLL BE 2.7 mm (0.1046") HOT ROLLED CARBON SHEET STEEL, COMMERCIAL QUALITY, ASTM A 569/A 569M.
4. LEG ANGLE SHALL BE ASTM A 36/A 36M.
5. WEDGE SHALL BE STEEL TUBING MADE TO ASTM A 500, GRADE B SPECIFICATIONS.
6. CHANNEL-ADAPTOR SHALL BE GALVANIZED STEEL MADE FROM 48 mm (1.9") OD TUBE WITH 3.0 mm (0.1196") WALL THICKNESS, ASTM A 500, GRADE B.
7. BOLTS TO BE M8 x 1.25 x 80 (5/16" x 3") HEX HEAD, GRADE 5, ZINK PLATED WITH WASHERS.
8. NUTS SHALL BE M8 x 1.25 (5/16" - 18 UNC) THREADS, NYLON INSERT LOCK NUTS.
9. ALL DIMENSIONS ARE IN MILLIMETERS, UNLESS NOTED OTHERWISE. ENGLISH UNITS IN PARENTHESIS ( ).
10. EITHER ALL METRIC OR ALL ENGLISH UNITS MUST BE USED ON PLANS. METRIC AND ENGLISH UNITS SHOWN MAY NOT BE MIXED.

INSTALLATION INSTRUCTIONS:

1. SOCKET SYSTEMS ARE APPROVED FOR CONCRETE INSTALLATIONS.
2. SOCKET SYSTEMS ARE APPROVED FOR USE WITH 3.71 kg/m (2.5 LB/FT.) CHANNEL BAR POSTS AND 50.8 mm (2.00") AND 57.2 mm (2.25") STEEL SQUARE POSTS.
3. PLACE SOCKET IN A HOLE WITH THE TOP OF THE SOCKET FLUSH WITH THE TOPS OF THE ORIGINAL CONCRETE ELEVATION.
4. PLACE CONCRETE AROUND THE SOCKET. DO NOT PLACE CONCRETE INSIDE THE SOCKET WHERE THE WEDGE AND CHANNEL-ADAPTOR OR POST ARE TO BE PLACED.
5. FOR CHANNEL BAR POST INSTALLATIONS - AFTER THE CONCRETE HAS CURED:
   - A. ATTACH THE CHANNEL BAR POST TO THE CHANNEL- ADAPTOR USING TWO BOLTS, LOCK NUTS, AND WASHERS.
   - B. INSERT THE LOWER PORTION OF THE CHANNEL- ADAPTOR INTO THE SOCKET UNTIL THE FOUR PIERCED HOLES ARE AT THE SAME HEIGHT AS THE TOP OF THE SOCKET.
   - C. ROTATE THE TWO UPPER HOLES IN THE CHANNEL- ADAPTOR TOWARD ONCOMING TRAFFIC.
   - D. POSITION THE WEDGE IN THE SOCKET WITH ITS HOLE AT THE TOP, AND DRIVE THE WEDGE INTO THE SOCKET UNTIL THE TOP OF THE WEDGE IS FLUSH WITH THE TOP OF THE SOCKET.
6. FOR STEEL SQUARE POST INSTALLATIONS - AFTER THE CONCRETE HAS CURED:
   - A. INSERT THE SQUARE POST FULLY INTO THE SOCKET.
   - B. POSITION THE WEDGE IN THE SOCKET WITH ITS HOLE AT THE TOP, AND DRIVE THE WEDGE INTO THE SOCKET UNITL THE TOP OF THE WEDGE IS FLUSH WITH THE TOP OF THE SOCKET.

TAPCO INDUSTRIES OR EQUAL

COMMONWEALTH OF PENNSYLVANIA
DEPARTMENT OF TRANSPORTATION
BUREAU OF HIGHWAY SAFETY AND TRAFFIC ENGINEERING

POST-MOUNTED SIGNS, TYPE B

SOCKET SYSTEM FOR CONCRETE INSTALLATIONS

RECOMMENDED MAY 25, 2007	RECOMMENDED MAY 25, 2007	SHT. 8 OF 9
Glen C Rowe	m Gilotel	
CHIEF, TRAFFIC ENGINEERING AND OPERATIONS DIVISION	CHIEF HIGHWAY ENGINEER	TC-8702B

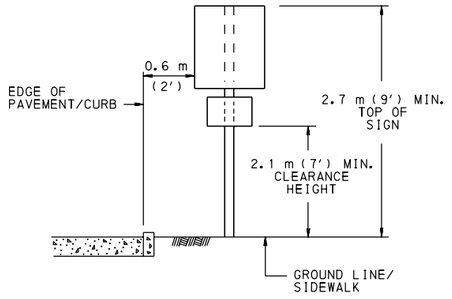

BUSINESS OR RESIDENTIAL AREA

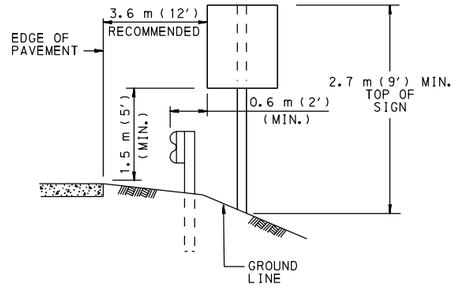

RURAL AREA
CONVENTIONAL HIGHWAY (NO SHOULDER)

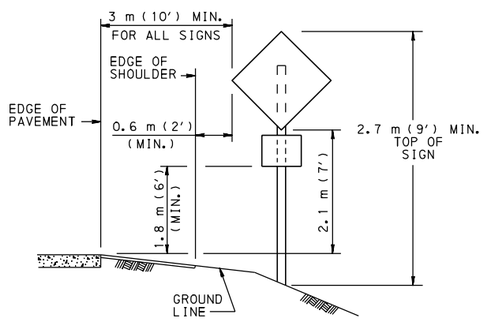

FREEWAY / EXPRESSWAYS

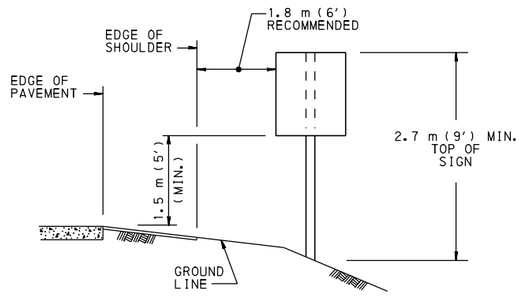

RURAL AREA
CONVENTIONAL HIGHWAY (WITH SHOULDER)

NOTES:

SIGN CLEARANCE HEIGHT

1. CLEARANCE HEIGHT SHALL BE MEASURED FROM THE BOTTOM OF THE SIGN TO A LEVEL LINE PROJECTED FROM THE NEAR EDGE OF ROADWAY. THIS MAY RESULT IN A SIGN HEIGHT GREATER THAN THE MINIMUM HEIGHT REQUIRED WHEN MEASURED FROM THE GROUND LEVEL TO THE BOTTOM OF THE SIGN. IN BUSINESS AND URBAN AREAS THE CLEARANCE HEIGHT SHALL ALSO BE MEASURED FROM THE BOTTOM OF THE SIGN TO THE GROUND LEVEL OR SIDEWALK AREA TO REDUCE THE POSSIBILITY OF PEDESTRIANS COLLIDING WITH THE SIGN.

LATERAL SIGN CLEARANCE

2. SIGNS SHOULD BE PLACED AS FAR AS PRACTICAL FROM THE EDGE OF THE ROADWAY TO REDUCE THE POSSIBILITY OF VEHICLES HITTING THE SIGNS. WHEN GUIDE RAIL IS PRESENT, SIGNS WILL BE PLACED BEHIND THE GUIDERAIL.

3. ROUTE MARKER SIGNS WITH AUXILIARY SIGNS (NORTH, SOUTH, ETC.) SHALL BE CONSIDERED A SINGLE SIGN ASSEMBLY. THE CLEARANCE HEIGHT IS MEASURED FROM THE BOTTOM OF THE LOWEST AUXILIARY SIGN TO A LEVEL LINE PROJECTED FROM THE NEAR EDGE OF ROADWAY.

4. BUSINESS OR URBAN AREAS

   A. IN BUSINESS, COMMERCIAL OR RESIDENTIAL DISTRICTS, OR WHERE PARKING AND/OR PEDESTRIAN MOVEMENTS ARE LIKELY, OR WHERE THE SIGN MAY BLOCK VISIBILITY, THE BOTTOM OF ALL SIGNS (INCLUDING AUXILIARY SIGNS) SHALL BE A MINIMUM OF 2.1 m (7') ABOVE GROUND AND THE NEAR PAVEMENT EDGE.

   B. LATERAL CLEARANCE RECOMMENDED IS 0.6 m (2') BEHIND CURB. IF SIDEWALK WIDTH IS LIMITED, OR WHEN EXISTING UTILITY POLES ARE CLOSE TO THE CURB A 0.3 m (1') CLEARANCE IS PERMISSIBLE.

5. RURAL AREAS

   A. CONVENTIONAL HIGHWAYS. ALTHOUGH 2.1 m (7') MINIMUM SIGN HEIGHT CLEARANCE IS RECOMMENDED, IN RURAL DISTRICTS WHERE THE CONDITIONS LISTED IN NOTE 4A ARE NOT LIKELY, SIGNS MAY BE MOUNTED AT A MINIMUM CLEARANCE HEIGHT OF 1.5 m (5'). IF A SUPPLEMENTAL SIGN IS INSTALLED BELOW THE MAIN SIGN, THE CLEARANCE HEIGHT OF THE SUPPLEMENTAL SIGN MAY BE 1.2 m (4').

   WHEN GUIDERAIL OR CONCRETE BARRIERS ARE PRESENT A 0.6 m (2') LATERAL CLEARANCE IS RECOMMENDED.

   WHEN SHOULDERS ARE NOT PRESENT IT IS RECOMMENDED THAT SIGNS BE PLACED 3.6 m (12') FROM THE EDGE OF ROADWAY. WHERE SHOULDERS ARE PRESENT A 1.8 m (6') LATERAL CLEARANCE IS RECOMMENDED.

   B. FREEWAY AND EXPRESSWAYS. DIRECTIONAL SIGNS SHALL BE HAVE A MINIMUM CLEARANCE HEIGHT OF 2.1 m (7'). HOWEVER, IF A SUPPLEMENTAL SIGN IS INSTALLED BELOW THE MAIN SIGN, THE SUPPLEMENTAL SIGN MAY HAVE A CLEARANCE HEIGHT OF 1.8 m (6'), PROVIDED THAT A 2.4 m (8') CLEARANCE HEIGHT IS MAINTAINED FOR THE MAIN SIGN.

   ALL ROUTE MARKER, REGULATORY, AND WARNING SIGN ASSEMBLIES SHALL MAINTAIN A 1.8 m CLEARANCE HEIGHT TO THE BOTTOM OF THE SIGN ASSEMBLY (INCLUDING AUXILIARY SIGNS).

   A 0.6 m (2') MINIMUM LATERAL CLEARANCE IS REQUIRED BEHIND UNMOUNTABLE CURB OR ROADWAY SHOULDER.

   A 3.0 m (10') MINIMUM LATERAL CLEARANCE FROM THE EDGE OF THE NEAREST TRAVEL LANE IS RECOMMENDED.

6. ALL DIMENSIONS ARE IN MILLIMETERS UNLESS OTHERWISE NOTED. ENGLISH UNITS IN PARENTHESIS ( ).

7. EITHER ALL METRIC OR ALL ENGLISH UNITS MUST BE USED ON PLANS. METRIC AND ENGLISH UNITS SHOWN MAY NOT BE MIXED.

COMMONWEALTH OF PENNSYLVANIA
DEPARTMENT OF TRANSPORTATION
BUREAU OF HIGHWAY SAFETY AND TRAFFIC ENGINEERING

POST-MOUNTED SIGNS, TYPE B

SIGN LOCATION/INSTALLATION DETAILS

RECOMMENDED MAY 25, 2007 Glenn C Rowe CHIEF, TRAFFIC ENGINEERING AND OPERATIONS DIVISION	RECOMMENDED MAY 25, 2007 M. C. Patel CHIEF HIGHWAY ENGINEER	SHT. 9 OF 9 TC-8702B

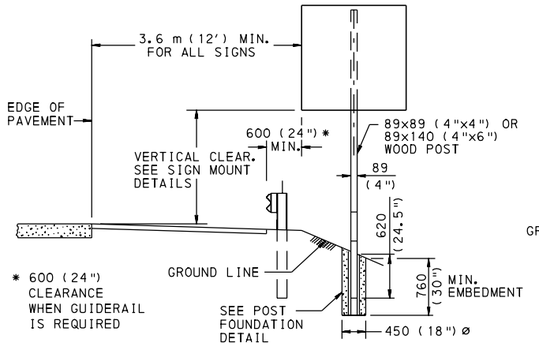

ELEVATION VIEW

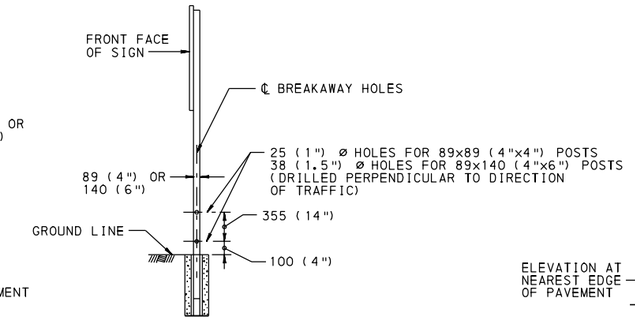

END VIEW

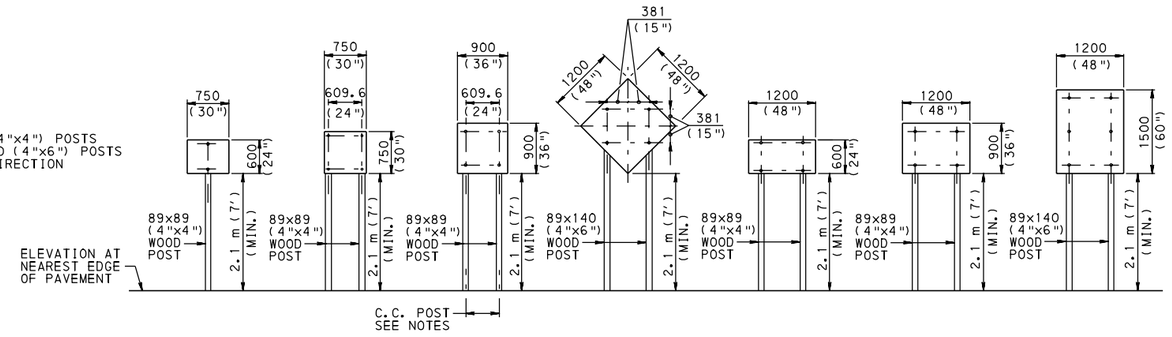

SINGLE MOUNTS

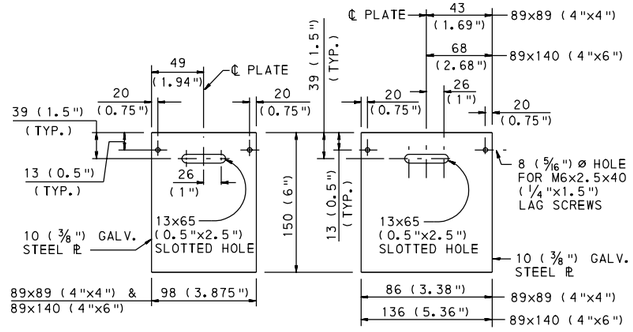

SHIM PLATE Ⓐ SHIM PLATE Ⓑ

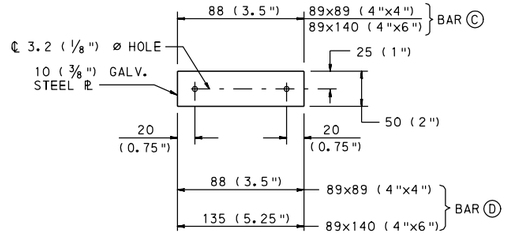

NOTE:
NAIL SHIM BARS TO POST TO HOLD BARS IN PLACE WHILE POST IS BEING PLACED.

SHIM PLATE Ⓒ
SHIM PLATE Ⓓ

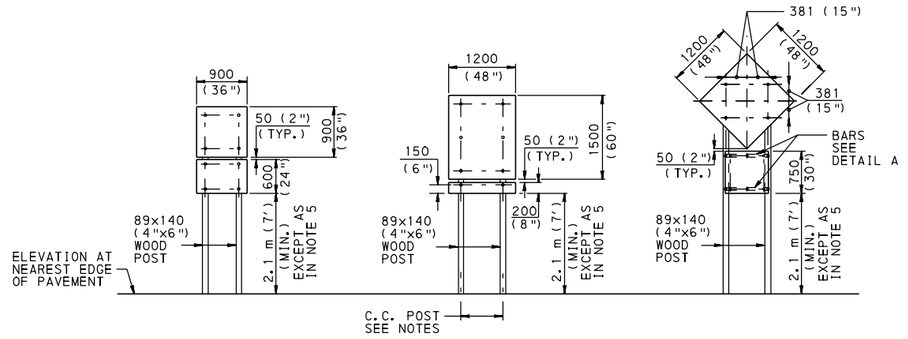

MULTIPLE MOUNTS

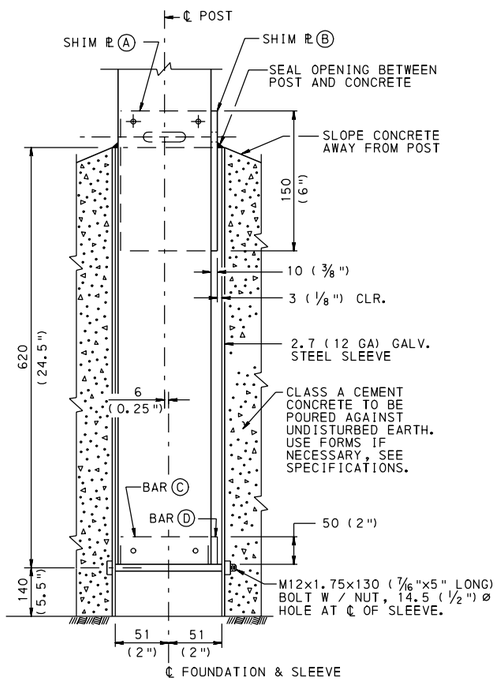

SECTION E-E (SHOWN)

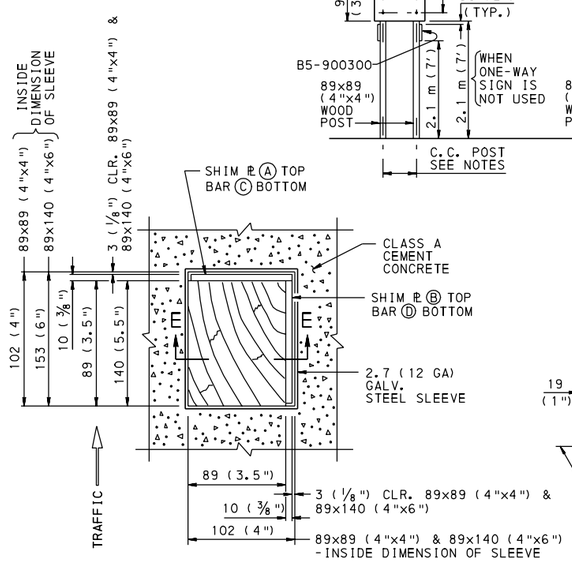

FOUNDATION DETAIL

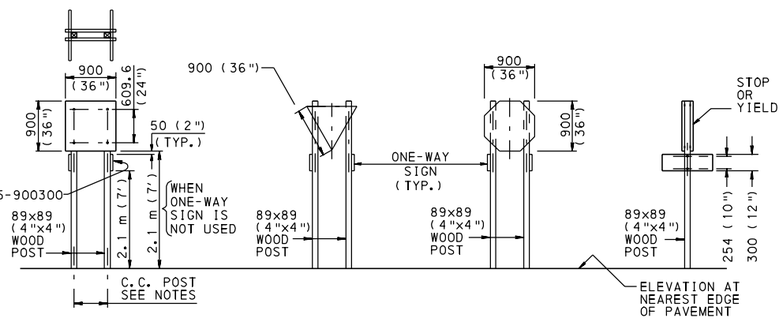

BACK-TO-BACK MOUNTS

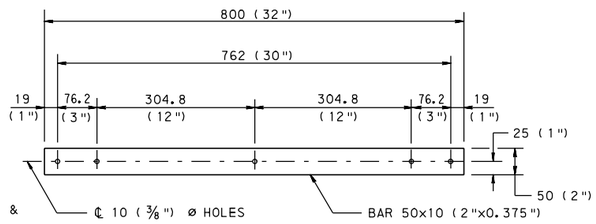

BAR DETAIL A

NOTES:

1. MATERIALS AND WORKMANSHIP SHALL BE IN ACCORDANCE WITH PENNSYLVANIA DEPARTMENT OF TRANSPORTATION PUBLICATION 408, UNLESS OTHERWISE NOTED.
2. DETERMINE THE CENTER TO CENTER POST DIMENSIONS ON TWO-POST INSTALLATIONS BY THE BOLT HOLE SPACING ON THE SIGN BLANKS.
3. FOR DETAILS OF BOLTS AND SIZE REQUIRED, SEE SHEET 2 OF 2.
4. GALVANIZE ALL STEEL SLEEVES IN ACCORDANCE WITH ASTM A 123 / A 123M.
5. STEEL USED FOR SLEEVES AND SHIMS SHALL HAVE A MINIMUM YIELD STRENGTH OF 36 KSI.
6. IF A SUPPLEMENTAL SIGN IS INSTALLED BELOW THE MAIN SIGN, THE BOTTOM OF THE SIGN ASSEMBLY MAY BE 1.8 m (6') ABOVE THE NEAR EDGE OF THE PAVEMENT. HOWEVER, IN BUSINESS, COMMERCIAL & RESIDENTIAL DISTRICTS, OR WHERE PARKING AND/OR PEDESTRIAN MOVEMENTS ARE LIKELY, OR WHERE THE SIGN MAY BLOCK VISIBILITY, THE BOTTOM OF ALL SIGNS (INCLUDING AUXILIARY SIGNS) SHALL BE A MINIMUM OF 2.1 m (7') ABOVE GROUND.
7. ALL DIMENSIONS ARE IN MILLIMETERS UNLESS OTHERWISE NOTED. ENGLISH UNITS IN PARENTHESIS ( ).
8. EITHER ALL METRIC OR ALL ENGLISH UNITS MUST BE USED ON PLANS. METRIC AND ENGLISH UNITS SHOWN MAY NOT BE MIXED.

COMMONWEALTH OF PENNSYLVANIA
DEPARTMENT OF TRANSPORTATION
BUREAU OF HIGHWAY SAFETY AND TRAFFIC ENGINEERING

POST-MOUNTED SIGNS, TYPE C

ERECTION DETAILS

RECOMMENDED MAY 25, 2007
Glenn C. Rowe
CHIEF, TRAFFIC ENGINEERING AND OPERATIONS DIVISION

RECOMMENDED MAY 25, 2007
M. Gates
CHIEF HIGHWAY ENGINEER

SHT. 1 OF 2

TC-8702C

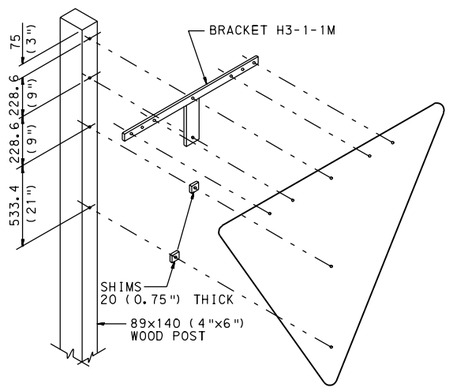

TYPICAL YIELD SIGN ASSEMBLY

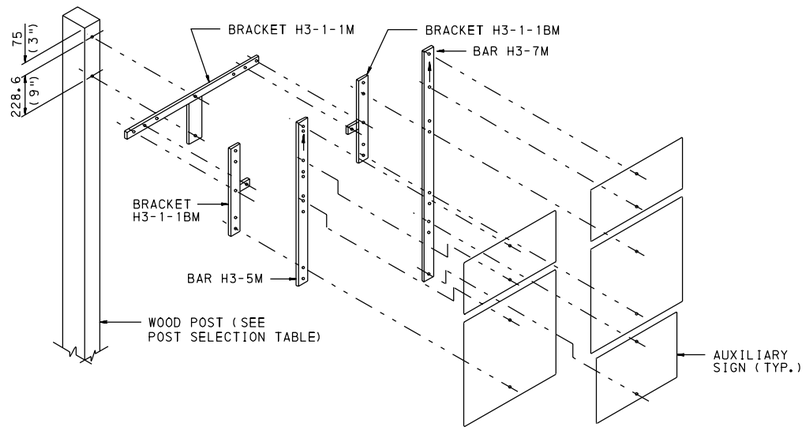

ROUTE MARKER BRACKET ASSEMBLY - TYPE I

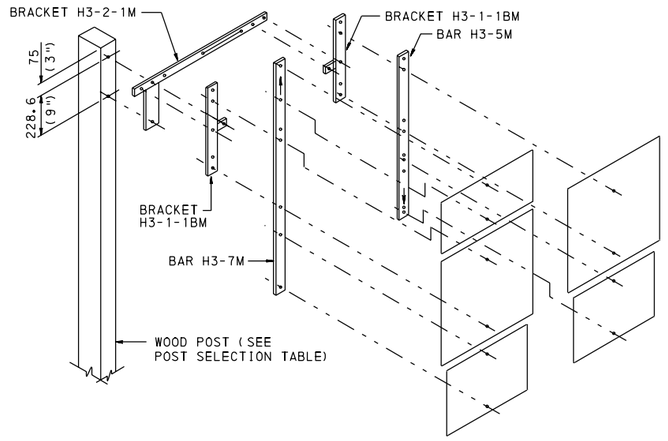

ROUTE MARKER BRACKET ASSEMBLY - TYPE II

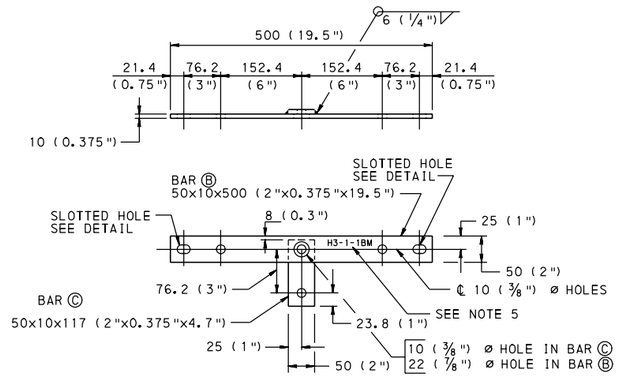

BRACKET H3-1-1BM

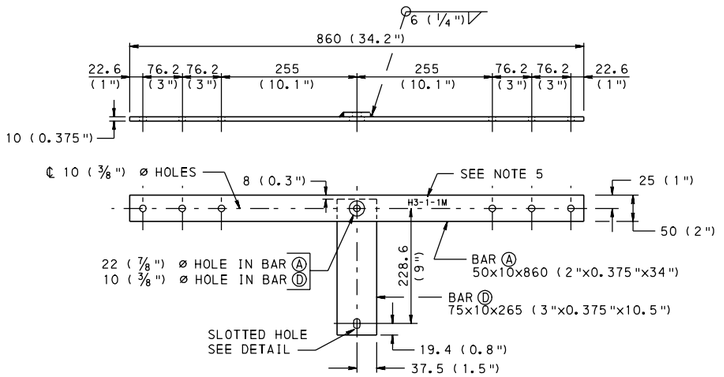

BRACKET H3-1-1M

ROUTE MARKER POST SELECTION TABLE	
POST SIZE	MAXIMUM SIGN SURFACE AREA
89x140 (4"x6")	1.300 m² (14.375 FT²)
140x140 (6"x6") *	1.500 m² (16.375 FT²)
140x184 (6"x8") *	3.000 m² (33.125 FT²)

* SEE TC-8702E FOR FOUNDATION DETAIL.

BOLT TABLE	
LENGTH	DESCRIPTION
25 (1")	SIGN + BRACKET
40 (1.5")	SIGN + BRACKET + BRACKET
40 (1.5")	BRACKET + BRACKET
200 (7.5")	SIGN + BRACKET(S) + 89x140 (4"x6") POST
200 (7.5")	BRACKET(S) + 89x140 (4"x6") POST
170 (6.5")	SIGN + 89x140 (4"x6") POST
120 (4.5")	SIGN + 89x89 (4"x4") POST

BOLTS ARE STAINLESS STEEL OR ALUMINUM, M8x1.0 (5/16") WITH FLAT WASHERS, LOCK WASHERS AND NUT. LENGTH AS SHOWN IN THE BOLT TABLE.

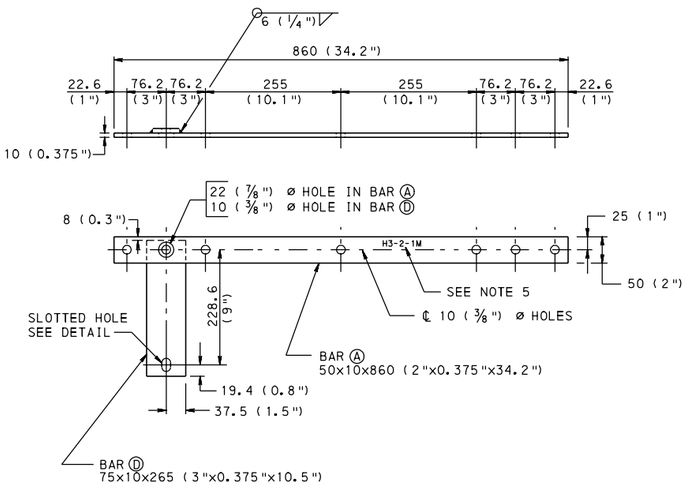

BRACKET H3-2-1M

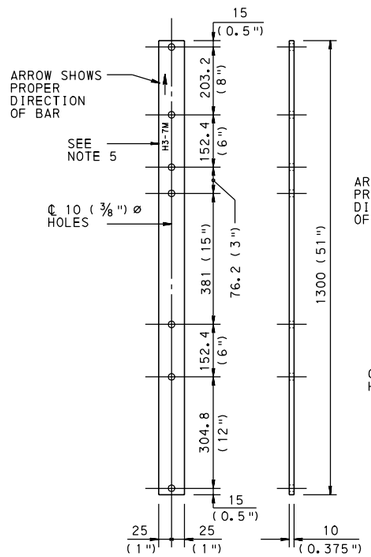

BAR H3-7M

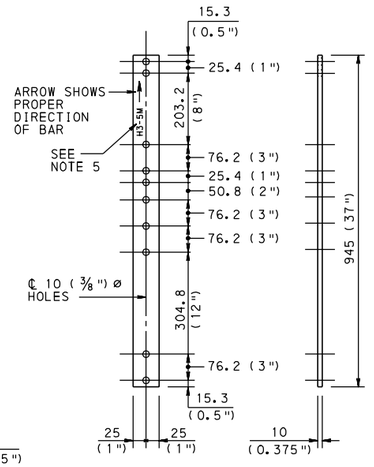

BAR H3-5M

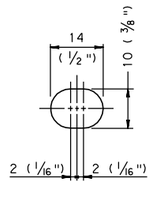

SLOTTED HOLE

NOTES:

1. ALL MATERIALS AND WORKMANSHIP SHALL BE IN ACCORDANCE WITH PENNSYLVANIA DEPARTMENT OF TRANSPORTATION PUBLICATION 408, UNLESS OTHERWISE NOTED.
2. A M8x75 (5/16"x3") LAG SCREW MAY BE USED IN LIEU OF A BOLT THROUGH THE POST AS ILLUSTRATED.
3. USE A FLAT ALUMINUM OR NYLON WASHER ON THE FACE OF ALL SIGNS.
4. DRILL BREAKAWAY HOLES IN POSTS AND ERECT AS SHOWN ON SHEET 1 OF 2.
5. STAMP BRACKET/BAR NUMBER IN 10 mm (0.375") HIGH LETTERS AND NUMBERS IN POSITIONS AS SHOWN.
6. ALL DIMENSIONS ARE IN MILLIMETERS UNLESS OTHERWISE NOTED. ENGLISH UNITS IN PARENTHESIS ( ).
7. EITHER ALL METRIC OR ALL ENGLISH UNITS MUST BE USED ON PLANS. METRIC AND ENGLISH UNITS SHOWN MAY NOT BE MIXED.

COMMONWEALTH OF PENNSYLVANIA
DEPARTMENT OF TRANSPORTATION
BUREAU OF HIGHWAY SAFETY AND TRAFFIC ENGINEERING

POST-MOUNTED SIGNS, TYPE C

ERECTION DETAILS

RECOMMENDED MAY 25, 2007	RECOMMENDED MAY 25, 2007	SHT. 2 OF 2
Glen C. Rowe	M. Patel	TC-8702C
CHIEF, TRAFFIC ENGINEERING AND OPERATIONS DIVISION	CHIEF HIGHWAY ENGINEER	

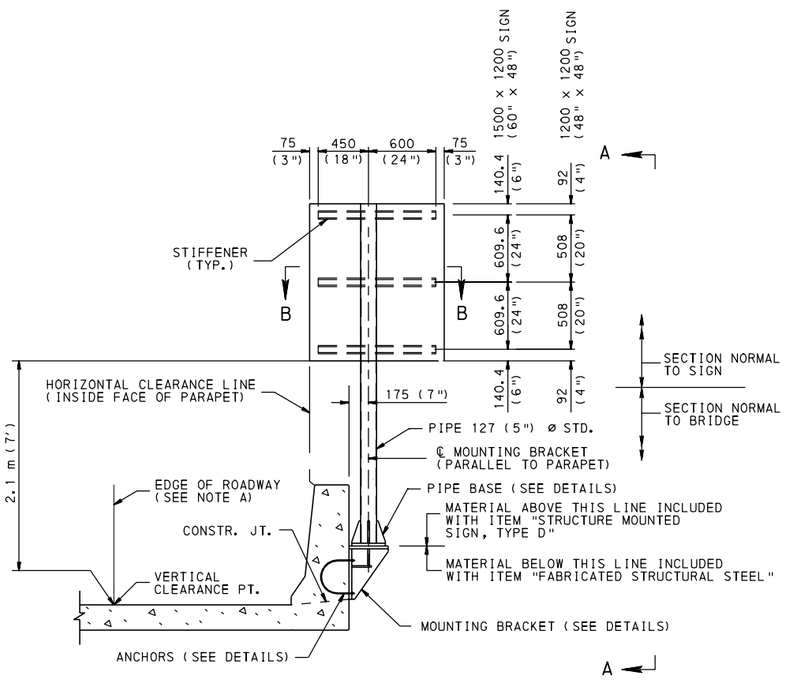

SECTION THRU BRIDGE SINGLE RECTANGULAR SIGN

NOTE A:

EDGE OF ROADWAY ON BRIDGE IS THE PROJECTION OF THE EDGE OF ROADWAY ON ADJACENT FILL SECTION OR AS INDICATED BY THE EDGE MARKINGS.

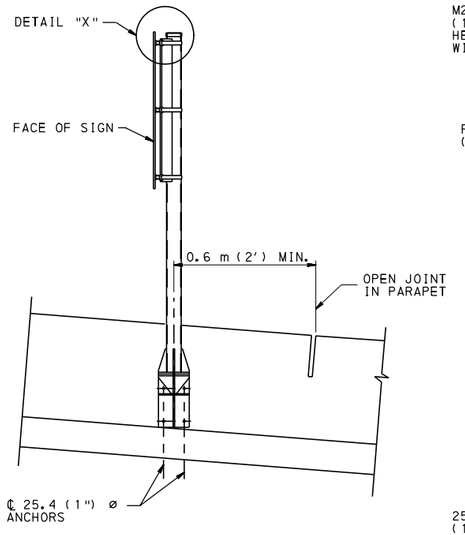

VIEW A-A

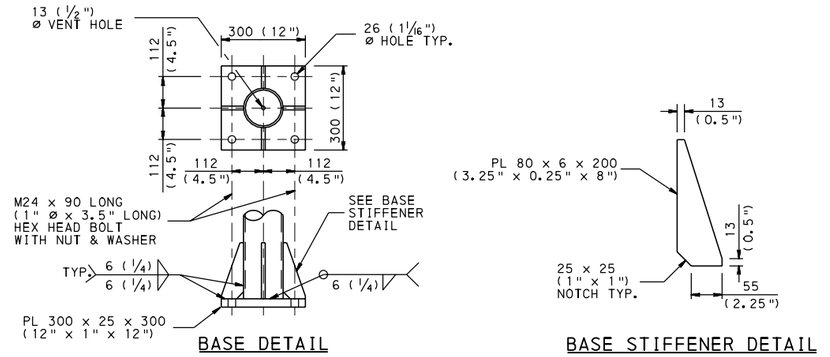

BASE DETAIL

BASE STIFFENER DETAIL

PIPE BASE DETAILS

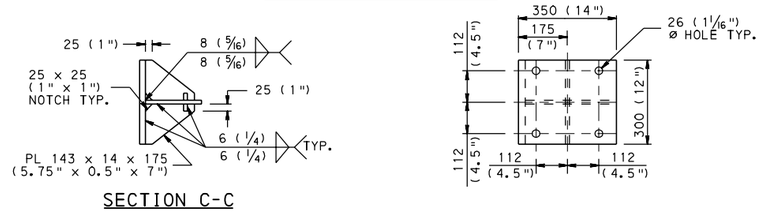

SECTION C-C

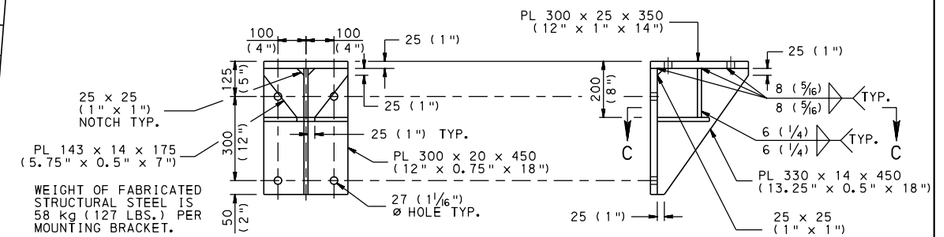

MOUNTING BRACKET DETAILS

NOTES:

1. MATERIALS AND WORKSMANSHIP SHALL BE IN ACCORDANCE WITH PENNSYLVANIA DEPARTMENT OF TRANSPORTATION PUBLICATION 408, UNLESS OTHERWISE NOTED.
2. ALL STEEL SHALL BE GALVANIZED IN ACCORDANCE WITH PUBLICATION 408.
3. THE STIFFENERS AND STIFFENER HARDWARE SHALL CONFORM TO SECTION 1103.03(d) AND TO STANDARD DRAWING TC-8701S. THE RIVETS USED TO FASTEN THE FLAT SHEET ALUMINUM TO THE STIFFENER SHALL CONFORM TO SECTION 1103.11(g) AND SHALL BE SPACED AS INDICATED IN SECTION 1103.03(e).
4. STEEL PIPE SUPPORTS TO BE ASTM A 53/A 53M, UNLESS OTHERWISE NOTED. ALL OTHER STRUCTURAL STEEL TO BE AASHTO M 270/M 270M (ASTM A 709/A 709M) GRADE 250 (GRADE 36), UNLESS OTHERWISE NOTED. ALL BOLTS TO BE AASHTO M 164 (ASTM A 325), TYPE 1, UNLESS OTHERWISE NOTED.
5. FOR DESIGN OF SIGN PANELS AND ATTACHMENT HARDWARE, SEE TRAFFIC STANDARD.
6. ALL WELDS TO CONFORM TO LATEST ANSI/AASHTO/AWS SPECIFICATIONS.
7. ALL DIMENSIONS ARE IN MILLIMETERS UNLESS OTHERWISE NOTED. ENGLISH UNITS IN PARENTHESIS ( ).
8. EITHER ALL METRIC OR ALL ENGLISH UNITS MUST BE USED ON PLANS. METRIC AND ENGLISH UNITS SHOWN MAY NOT BE MIXED.

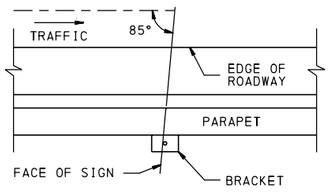

PLAN VIEW

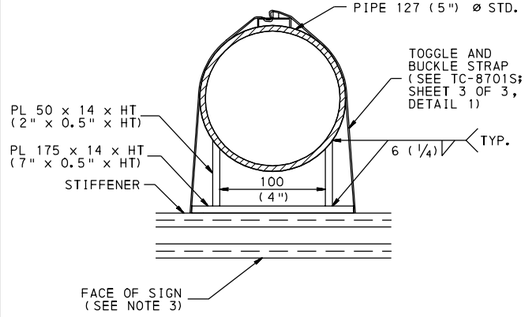

SECTION B-B

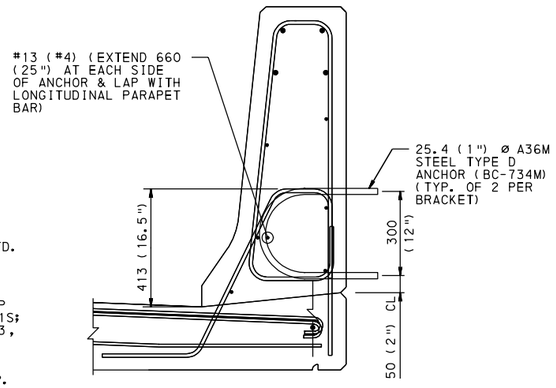

ANCHOR DETAIL

(FOR INSTALLATION ON ALL NEW STRUCTURES)

NOTE:

ANCHOR TO BE INSTALLED A MINIMUM OF 5 FT. FROM DECK JOINT. SEE STRUCTURE PLANS FOR PARAPET REINFORCEMENT DETAILS.

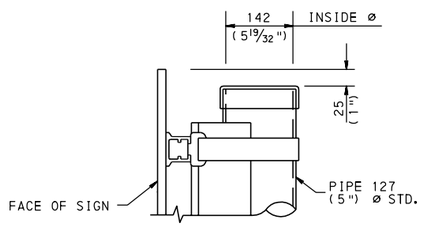

DETAIL "X"

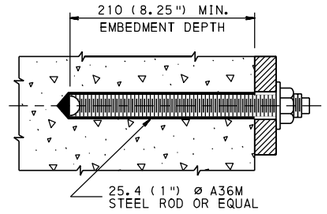

ANCHOR ROD ASSEMBLY WITH NUT AND WASHER

ALTERNATE ADHESIVE ANCHOR DETAIL

(FOR INSTALLATION ON EXISTING STRUCTURE ONLY)
(HILTI HVA ADHESIVE ANCHOR OR EQUAL)

NOTE:

ANCHOR TO BE INSTALLED A MINIMUM OF 5 FT. FROM DECK JOINT.

COMMONWEALTH OF PENNSYLVANIA
DEPARTMENT OF TRANSPORTATION
BUREAU OF HIGHWAY SAFETY AND TRAFFIC ENGINEERING

POST-MOUNTED SIGNS, TYPE D

ERECTION DETAILS (STRUCTURE CONNECTIONS)

RECOMMENDED MAY 25, 2007 Glen C Rowe CHIEF, TRAFFIC ENGINEERING AND OPERATIONS DIVISION	RECOMMENDED MAY 25, 2007 M. Gittel CHIEF HIGHWAY ENGINEER	SHT. 1 OF 2 TC-8702D

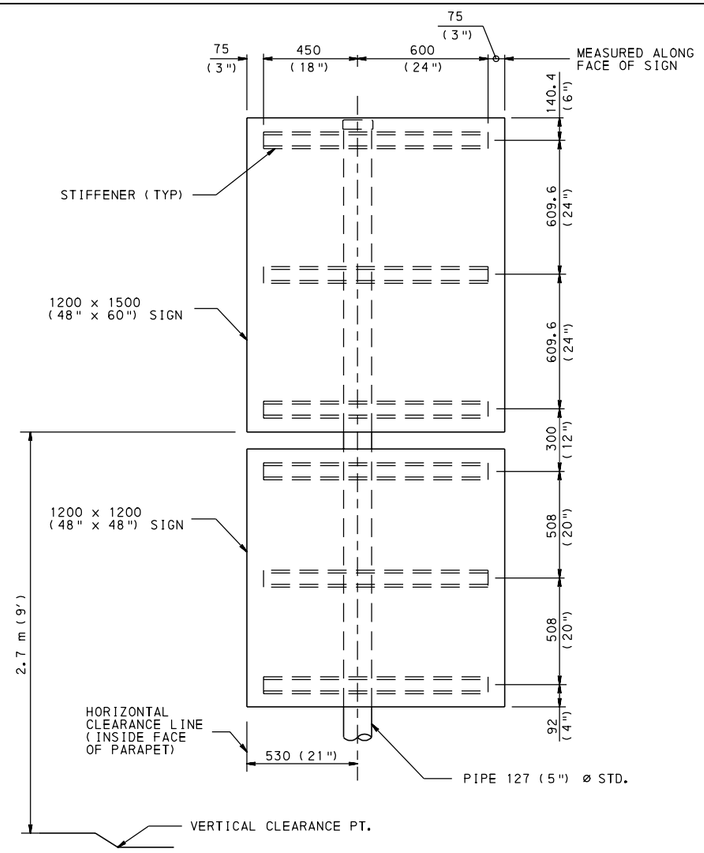

DOUBLE RECTANGULAR SIGN

(PARTS NOT SHOWN ARE SIMILAR TO SINGLE RECTANGULAR SIGN)

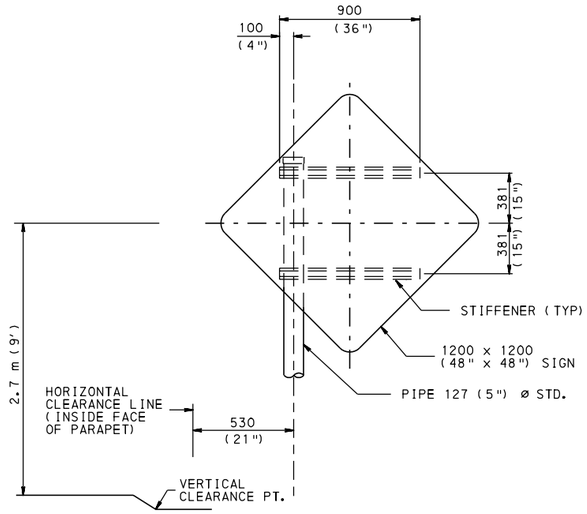

DIAMOND SIGN

(PARTS NOT SHOWN ARE SAME AS SINGLE RECTANGULAR SIGN)

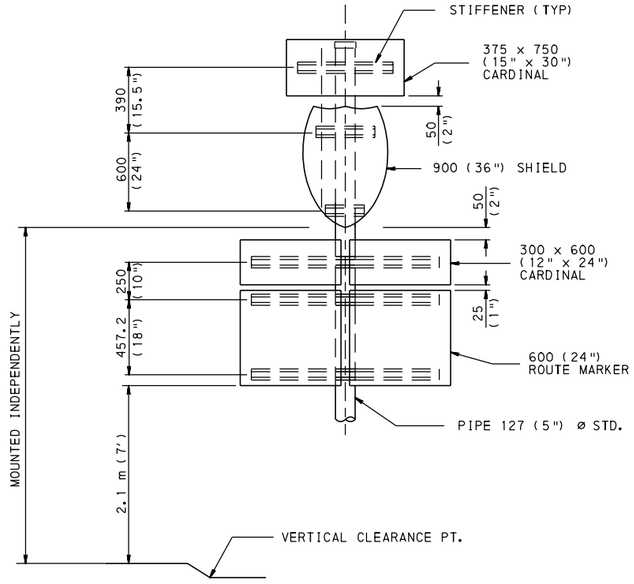

DOUBLE ROUTE MARKER WITH 900 (36") SHIELD

(PARTS NOT SHOWN ARE SIMILAR TO SINGLE RECTANGULAR SIGN)

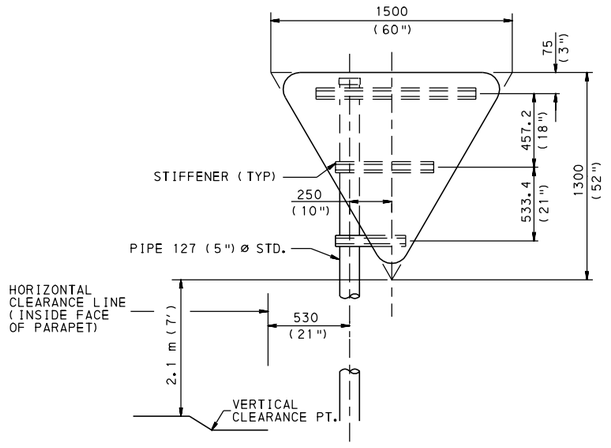

TRIANGULAR SIGN

(PARTS NOT SHOWN ARE SIMILAR TO SINGLE RECTANGULAR SIGN)

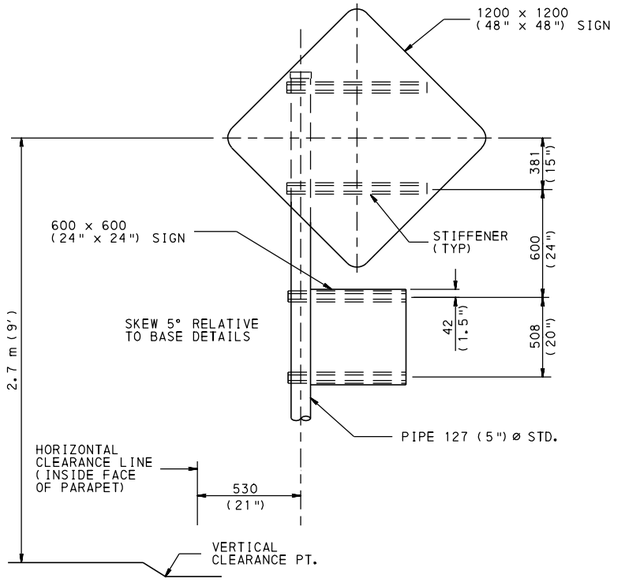

DIAMOND SIGN WITH RECTANGULAR SIGN

(PARTS NOT SHOWN ARE SIMILAR TO DIAMOND
SIGN AND RECTANGULAR SIGN)

NOTES:

1. ALL DIMENSIONS ARE IN MILLIMETERS UNLESS OTHERWISE NOTED. ENGLISH UNITS IN PARENTHESIS ( ).
2. EITHER ALL METRIC OR ALL ENGLISH UNITS MUST BE USED ON PLANS. METRIC AND ENGLISH UNITS SHOWN MAY NOT BE MIXED.

COMMONWEALTH OF PENNSYLVANIA
DEPARTMENT OF TRANSPORTATION
BUREAU OF HIGHWAY SAFETY AND TRAFFIC ENGINEERING

POST-MOUNTED SIGNS, TYPE D

ERECTION DETAILS (STRUCTURE CONNECTIONS)

RECOMMENDED MAY 25, 2007 Glenn C. Rowe CHIEF, TRAFFIC ENGINEERING AND OPERATIONS DIVISION	RECOMMENDED MAY 25, 2007 M. G. Patel CHIEF HIGHWAY ENGINEER	SHT. 2 OF 2 TC-8702D

DESIGN CRITERIA:

1. DESIGN BASED ON 2001 AASHTO STANDARD SPECIFICATIONS FOR STRUCTURAL SUPPORTS FOR HIGHWAY SIGNS, LUMINAIRES AND TRAFFIC SIGNALS INCLUDING 2002 INTERIM SPECIFICATIONS WITH THE FOLLOWING DESIGN CRITERIA:
   - BASIC WIND SPEED (V) = 40 m/sec (90 MPH) (3-SECOND GUST)
   - WIND IMPORTANCE FACTOR (I_F) = 0.71 (10 YEAR DESIGN LIFE)
   - FATIGUE IS NOT CONSIDERED FOR ROADSIDE SIGNS.
2. EMBEDMENT OF FOOTINGS IS BASED ON FIGURES 13-3 AND 13-4 AS OUTLINED IN THE AASHTO SPECIFICATIONS.

PLAN VIEW

SIGN POST SELECTION NOTES:

1. DETERMINE VALUES OF "W", "H", AND "L_B" AS INDICATED IN THE SIGN ELEVATION.
   - W = MAXIMUM WIDTH OF SIGN.
   - H = MAXIMUM HEIGHT OF SIGN.
   - L_B = MAXIMUM DISTANCE BETWEEN TOP OF A FOOTING AND BOTTOM OF SIGN.
2. FOR SELECTION OF POSTS, ENTER TABLES WITH VALUES OF "W", "H" AND "L_B".
3. FOR A SIGN SIZE BETWEEN THOSE VALUES OF "W", "H" AND "L_B" IN THE TABLE, USE NEXT HIGHEST m (FT) VALUE.
4. USE THE LONGEST POST TO SELECT ALL POST SIZES.

POST SELECTION TABLE - ONE POST

W m (FT)	L_B m (FT)	HEIGHT "H" IN m (FT) 0.610 (2)	0.915 (3)	1.220 (4)	1.525 (5)	1.830 (6)	2.135 (7)	2.440 (8)
0.6 (2)	1.8 (6)	P1	P1	P1	P1	P1	P2	P2
	2.1 (7)	P1	P1	P1	P1	P1	P2	P3
	2.4 (8)	P1	P1	P1	P1	P2	P2	P3
	2.7 (9)	P1	P1	P1	P1	P2	P3	P3
	3.0 (10)	P1	P1	P1	P2	P3	P3	P3
	3.3 (11)	P1	P1	P1	P2	P3	P3	P3
0.9 (3)	1.8 (6)	P1	P1	P1	P1	P2	P3	P3
	2.1 (7)	P1	P1	P1	P2	P3	P3	P3
	2.4 (8)	P1	P1	P1	P2	P3	P3	P3
	2.7 (9)	P1	P1	P2	P3	P3	P3	P3
	3.0 (10)	P1	P1	P2	P3	P3	P3	-
	3.3 (11)	P1	P1	P3	P3	P3	-	-
1.2 (4)	1.8 (6)	P1	P1	P1	P2	P3	P3	P3
	2.1 (7)	P1	P1	P2	P3	P3	P3	-
	2.4 (8)	P1	P1	P2	P3	P3	P3	-
	2.7 (9)	P1	P2	P3	P3	P3	-	-
	3.0 (10)	P1	P2	P3	P3	P3	-	-
	3.3 (11)	P1	P3	P3	P3	-	-	-
1.5 (5)	1.8 (6)	P1	P1	P2	P3	P3	P3	-
	2.1 (7)	P1	P1	P2	P3	P3	-	-
	2.4 (8)	P1	P2	P3	P3	P3	-	-
	2.7 (9)	P1	P2	P3	P3	-	-	-
	3.0 (10)	P1	P3	P3	P3	-	-	-
	3.3 (11)	P2	P3	P3	-	-	-	-
1.8 (6)	1.8 (6)	*	P2	P3	P3	P3	-	-
	2.1 (7)	*	P2	P3	P3	-	-	-
	2.4 (8)	*	P2	P3	P3	-	-	-
	2.7 (9)	*	P3	P3	-	-	-	-
	3.0 (10)	*	P3	P3	-	-	-	-
	3.3 (11)	*	P3	-	-	-	-	-
2.1 (7)	1.8 (6)	*	P2	P3	P3	-	-	-
	2.1 (7)	*	P2	P3	P3	-	-	-
	2.4 (8)	*	P3	P3	-	-	-	-
	2.7 (9)	*	P3	P3	-	-	-	-
	3.0 (10)	*	P3	-	-	-	-	-
	3.3 (11)	*	P3	-	-	-	-	-
2.4 (8)	1.8 (6)	*	P2	P3	P3	-	-	-
	2.1 (7)	*	P3	P3	-	-	-	-
	2.4 (8)	*	P3	P3	-	-	-	-
	2.7 (9)	*	P3	-	-	-	-	-
	3.0 (10)	*	P3	-	-	-	-	-
	3.3 (11)	*	P3	-	-	-	-	-

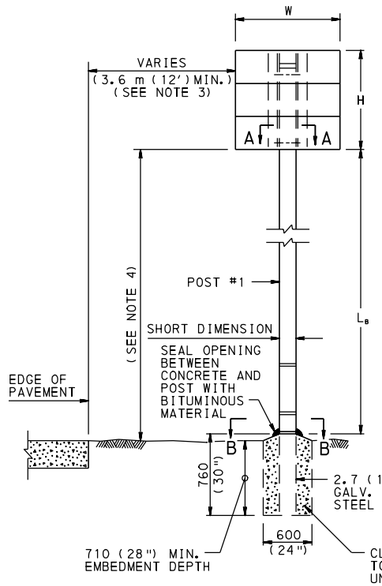

SIGN ELEVATION

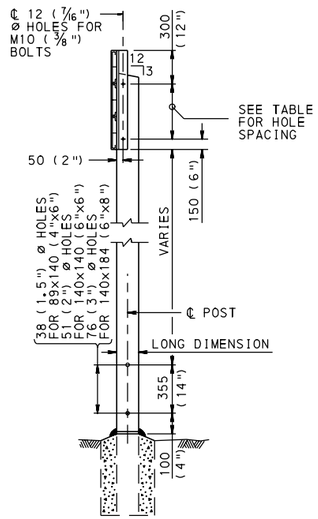

END VIEW

METRIC UNITS

ANGLE CONNECTION BOLT SPACING	
H (m)	SPACES
0.610	1 AT 160.0 mm
0.915	2 AT 232.5 mm
1.220	2 AT 385.0 mm
1.525	3 AT 358.3 mm
1.830	3 AT 460.0 mm
2.135	4 AT 421.3 mm
2.440	6 AT 331.6 mm

ENGLISH UNITS

ANGLE CONNECTION BOLT SPACING	
H (FT)	SPACES
2	1 AT 6"
3	2 AT 9"
4	2 AT 15"
5	3 AT 14"
6	3 AT 18"
7	4 AT 16.5"
8	6 AT 13"

TABLE FOR HOLE SPACING

NOTES:

1. MATERIALS AND WORKMANSHIP IN ACCORDANCE WITH PENNSYLVANIA DEPARTMENT OF TRANSPORTATION PUBLICATION 408, UNLESS NOTED OTHERWISE.
2. POST #1 IS ALWAYS ADJACENT TO ROADWAY, WHETHER SIGN IS LOCATED ON LEFT OR RIGHT.
3. AT LOCATIONS WITH UNMOUNTABLE CURB, GUIDE RAIL OR BARRIER, PLACE THE NEAR EDGE OF THE SIGN AT LEAST 0.6 m (2') BEHIND THE CURB FACE, GUIDE RAIL OR BARRIER. AT LOCATIONS WITH GUIDE RAIL OR BARRIER, IT IS DESIRABLE TO PLACE POST #1 BEYOND THE DEFLECTION DISTANCE OF THE GUIDE RAIL OR BARRIER. PRIOR TO FABRICATION, DETERMINE ACTUAL LATERAL PLACEMENT IN THE FIELD WITH THE APPROVAL OF THE ENGINEER.
4. BUSINESS OR URBAN AREAS
   A. IN BUSINESS, COMMERCIAL OR RESIDENTIAL DISTRICTS, OR WHERE PARKING AND/OR PEDESTRIAN MOVEMENTS ARE LIKELY, OR WHERE THE SIGN MAY BLOCK VISIBILITY, THE BOTTOM OF ALL SIGNS (INCLUDING AUXILIARY SIGNS) SHALL BE A MINIMUM OF 2.1 m (7') ABOVE GROUND AND THE NEAR PAVEMENT EDGE.

   RURAL AREAS

   B. CONVENTIONAL HIGHWAYS. ALTHOUGH 2.1 m (7') MINIMUM SIGN HEIGHT CLEARANCE IS RECOMMENDED, IN RURAL DISTRICTS WHERE THE CONDITIONS LISTED IN NOTE 4A ARE NOT LIKELY, SIGNS MAY BE MOUNTED AT A MINIMUM CLEARANCE HEIGHT OF 1.5 m (5'). IF A SUPPLEMENTAL SIGN IS INSTALLED BELOW THE MAIN SIGN, THE CLEARANCE HEIGHT OF THE SUPPLEMENTAL SIGN MAY BE 1.2 m (4').

   C. FREEWAY AND EXPRESSWAYS. SIGNS SHALL HAVE A MINIMUM CLEARANCE HEIGHT OF 2.1 m (7'). HOWEVER, IF A SUPPLEMENTAL SIGN IS INSTALLED BELOW THE MAIN SIGN, THE SUPPLEMENTAL SIGN MAY HAVE A CLEARANCE HEIGHT OF 1.8 m (6'), PROVIDED THAT A 2.1 m (7') CLEARANCE HEIGHT IS MAINTAINED FOR THE MAIN SIGN.
5. LOCATE SIGNS TO AVOID PLACING SUPPORTS IN DRAINAGE DITCHES.
6. SEE SHEET 2 FOR TWO-POST INSTALLATION.
7. SEE SHEET 3 FOR THREE-POST INSTALLATION.
8. SEE SHEET 4 FOR SECTIONS AND ERECTION DETAILS.
9. SEE SHEET 5 FOR TEMPORARY DIRECT BURIAL TWO-POST INSTALLATION.
10. FOR DETAIL OF SIGN PANELS AND ATTACHMENT HARDWARE, SEE TRAFFIC STANDARD TC-8701E OR TC-8701S.
11. TWIST-IN TOGGLE STRAPS MAY BE USED ON FLAT SHEET ALUMINUM SIGNS WITH STIFFENERS IN ACCORDANCE WITH TC-8701S AND PUB. 408.
12. ALL DIMENSIONS ARE IN MILLIMETERS UNLESS OTHERWISE NOTED. ENGLISH UNITS IN PARENTHESIS ( ).
13. EITHER ALL METRIC OR ALL ENGLISH UNITS MUST BE USED ON PLANS. METRIC AND ENGLISH UNITS SHOWN MAY NOT BE MIXED.

LEGEND:

P1 = 89x140 (4"x6")
P2 = 140x140 (6"x6")
P3 = 140x184 (6"x8")
* USE TWO POSTS (SEE SHEET 2)

POST SELECTION EXAMPLE

FOR A SIGN WHERE
W = 0.6 m (2')
H = 0.610 m (2')
L_B = 3.3 m (11')

ONE P1 = 89x140 (4"x6") WOOD POST IS REQUIRED.

COMMONWEALTH OF PENNSYLVANIA
DEPARTMENT OF TRANSPORTATION
BUREAU OF HIGHWAY SAFETY AND TRAFFIC ENGINEERING

POST-MOUNTED SIGNS, TYPE E

WOOD POSTS
SELECTION TABLES
ERECTION DETAILS

RECOMMENDED MAY 25, 2007	RECOMMENDED MAY 25, 2007	SHT. 1 OF 5
Glenn C. Rowe	M. L. Patel	
CHIEF, TRAFFIC ENGINEERING AND OPERATIONS DIVISION	CHIEF HIGHWAY ENGINEER	TC-8702E

POST SELECTION TABLE - TWO POSTS

W m (FT)	L_B m (FT)	HEIGHT "H" IN m (FT) 0.610 (2)	0.915 (3)	1.220 (4)	1.525 (5)	1.830 (6)
1.8 (6)	1.8 (6)	P1	P1	P1	P1	-
	2.1 (7)	P1	P1	P1	-	-
	2.4 (8)	P1	P1	P1	-	-
	2.7 (9)	P1	P1	-	-	-
	3.0 (10)	P1	P1	-	-	-
	3.3 (11)	P1	-	-	-	-
	3.6 (12)	P1	-	-	-	-
	3.9 (13)	P1	-	-	-	-
	4.2 (14)	-	-	-	-	-
	4.5 (15)	-	-	-	-	-
	4.8 (16)	-	-	-	-	-
2.1 (7)	1.8 (6)	P1	P1	P1	-	-
	2.1 (7)	P1	P1	P1	-	-
	2.4 (8)	P1	P1	-	-	-
	2.7 (9)	P1	P1	-	-	-
	3.0 (10)	P1	-	-	-	-
	3.3 (11)	P1	-	-	-	-
	3.6 (12)	P1	-	-	-	-
	3.9 (13)	-	-	-	-	-
	4.2 (14)	-	-	-	-	-
	4.5 (15)	-	-	-	-	-
	4.8 (16)	-	-	-	-	-
2.4 (8)	1.8 (6)	P1	P1	P1	-	-
	2.1 (7)	P1	P1	-	-	-
	2.4 (8)	P1	P1	-	-	-
	2.7 (9)	P1	-	-	-	-
	3.0 (10)	P1	-	-	-	-
	3.3 (11)	P1	-	-	-	-
	3.6 (12)	-	-	-	-	-
	3.9 (13)	-	-	-	-	-
	4.2 (14)	-	-	-	-	-
	4.5 (15)	-	-	-	-	-
	4.8 (16)	-	-	-	-	-
2.7 (9)	1.8 (6)	P1	P1	P2 *	P3 *	P3 *
	2.1 (7)	P1	P1	P2 *	P3 *	P3 *
	2.4 (8)	P1	P2 *	P3 *	P3 *	P3 *
	2.7 (9)	P1	P2 *	P3 *	P3 *	P3 *
	3.0 (10)	P1	P2 *	P3 *	P3 *	-
	3.3 (11)	P1	P3 *	P3 *	P3 *	-
	3.6 (12)	P2 *	P3 *	P3 *	-	-
	3.9 (13)	P2 *	P3 *	P3 *	-	-
	4.2 (14)	P3 *	P3 *	-	-	-
	4.5 (15)	P3 *	P3 *	-	-	-
	4.8 (16)	P3 *	-	-	-	-
3.0 (10)	1.8 (6)	P1	P1	P2 *	P3 *	P3 *
	2.1 (7)	P1	P1	P3 *	P3 *	P3 *
	2.4 (8)	P1	P2 *	P3 *	P3 *	P3 *
	2.7 (9)	P1	P2 *	P3 *	P3 *	-
	3.0 (10)	P1	P3 *	P3 *	P3 *	-
	3.3 (11)	P2 *	P3 *	P3 *	-	-
	3.6 (12)	P2 *	P3 *	P3 *	-	-
	3.9 (13)	P3 *	P3 *	-	-	-
	4.2 (14)	P3 *	P3 *	-	-	-
	4.5 (15)	P3 *	-	-	-	-
	4.8 (16)	P3 *	-	-	-	-

POST SELECTION TABLE - TWO POSTS

W m (FT)	L_B m (FT)	HEIGHT "H" IN m (FT) 0.610 (2)	0.915 (3)	1.220 (4)	1.525 (5)	1.830 (6)
3.3 (11)	1.8 (6)	P1	P1	P2 *	P3 *	P3 *
	2.1 (7)	P1	P2 *	P3 *	P3 *	P3 *
	2.4 (8)	P1	P2 *	P3 *	P3 *	-
	2.7 (9)	P1	P3 *	P3 *	P3 *	-
	3.0 (10)	P2 *	P3 *	P3 *	-	-
	3.3 (11)	P2 *	P3 *	P3 *	-	-
	3.6 (12)	P3 *	P3 *	-	-	-
	3.9 (13)	P3 *	P3 *	-	-	-
	4.2 (14)	P3 *	P3 *	-	-	-
	4.5 (15)	P3 *	-	-	-	-
	4.8 (16)	P3 *	-	-	-	-
3.6 (12)	1.8 (6)	P1	P2 *	P3 *	P3 *	P3 *
	2.1 (7)	P1	P2 *	P3 *	P3 *	-
	2.4 (8)	P1	P2 *	P3 *	P3 *	-
	2.7 (9)	P2 *	P3 *	P3 *	-	-
	3.0 (10)	P2 *	P3 *	P3 *	-	-
	3.3 (11)	P2 *	P3 *	-	-	-
	3.6 (12)	P3 *	P3 *	-	-	-
	3.9 (13)	P3 *	P3 *	-	-	-
	4.2 (14)	P3 *	-	-	-	-
	4.5 (15)	P3 *	-	-	-	-
	4.8 (16)	P3 *	-	-	-	-
3.9 (13)	1.8 (6)	P1	P2	P3	P3	-
	2.1 (7)	P1	P2	P3	P3	-
	2.4 (8)	P1	P3	P3	-	-
	2.7 (9)	P2	P3	P3	-	-
	3.0 (10)	P2	P3	P3	-	-
	3.3 (11)	P3	P3	-	-	-
	3.6 (12)	P3	P3	-	-	-
	3.9 (13)	P3	P3	-	-	-
	4.2 (14)	P3	-	-	-	-
	4.5 (15)	P3	-	-	-	-
	4.8 (16)	P3	-	-	-	-
4.2 (14)	1.8 (6)	P1	P2	P3	P3	-
	2.1 (7)	P1	P2	P3	P3	-
	2.4 (8)	P2	P3	P3	-	-
	2.7 (9)	P2	P3	P3	-	-
	3.0 (10)	P2	P3	-	-	-
	3.3 (11)	P3	P3	-	-	-
	3.6 (12)	P3	P3	-	-	-
	3.9 (13)	P3	-	-	-	-
	4.2 (14)	P3	-	-	-	-
	4.5 (15)	P3	-	-	-	-
	4.8 (16)	-	-	-	-	-
4.5 (15)	1.8 (6)	P1	P2	P3	P3	-
	2.1 (7)	P1	P3	P3	-	-
	2.4 (8)	P2	P3	P3	-	-
	2.7 (9)	P2	P3	-	-	-
	3.0 (10)	P3	P3	-	-	-
	3.3 (11)	P3	P3	-	-	-
	3.6 (12)	P3	-	-	-	-
	3.9 (13)	P3	-	-	-	-
	4.2 (14)	P3	-	-	-	-
	4.5 (15)	P3	-	-	-	-
	4.8 (16)	-	-	-	-	-

POST SELECTION TABLE - TWO POSTS

W m (FT)	L_B m (FT)	HEIGHT "H" IN m (FT) 0.610 (2)	0.915 (3)	1.220 (4)	1.525 (5)	1.830 (6)
4.8 (16)	1.8 (6)	P1	P2	P3	P3	-
	2.1 (7)	P2	P3	P3	-	-
	2.4 (8)	P2	P3	P3	-	-
	2.7 (9)	P2	P3	-	-	-
	3.0 (10)	P3	P3	-	-	-
	3.3 (11)	P3	P3	-	-	-
	3.6 (12)	P3	-	-	-	-
	3.9 (13)	P3	-	-	-	-
	4.2 (14)	P3	-	-	-	-
	4.5 (15)	P3	-	-	-	-
	4.8 (16)	-	-	-	-	-
5.1 (17)	1.8 (6)	P1	P3	P3	-	-
	2.1 (7)	P2	P3	P3	-	-
	2.4 (8)	P2	P3	-	-	-
	2.7 (9)	P3	P3	-	-	-
	3.0 (10)	P3	P3	-	-	-
	3.3 (11)	P3	-	-	-	-
	3.6 (12)	P3	-	-	-	-
	3.9 (13)	P3	-	-	-	-
	4.2 (14)	P3	-	-	-	-
	4.5 (15)	-	-	-	-	-
	4.8 (16)	-	-	-	-	-
5.4 (18)	1.8 (6)	P1	P3	P3	-	-
	2.1 (7)	P2	P3	P3	-	-
	2.4 (8)	P2	P3	-	-	-
	2.7 (9)	P3	P3	-	-	-
	3.0 (10)	P3	P3	-	-	-
	3.3 (11)	P3	-	-	-	-
	3.6 (12)	P3	-	-	-	-
	3.9 (13)	P3	-	-	-	-
	4.2 (14)	P3	-	-	-	-
	4.5 (15)	-	-	-	-	-
	4.8 (16)	-	-	-	-	-
5.7 (19)	1.8 (6)	P2	P3	P3	-	-
	2.1 (7)	P2	P3	P3	-	-
	2.4 (8)	P2	P3	-	-	-
	2.7 (9)	P3	P3	-	-	-
	3.0 (10)	P3	-	-	-	-
	3.3 (11)	P3	-	-	-	-
	3.6 (12)	P3	-	-	-	-
	3.9 (13)	P3	-	-	-	-
	4.2 (14)	-	-	-	-	-
	4.5 (15)	-	-	-	-	-
	4.8 (16)	-	-	-	-	-
6.0 (20)	1.8 (6)	P2	P3	P3	-	-
	2.1 (7)	P2	P3	-	-	-
	2.4 (8)	P3	P3	-	-	-
	2.7 (9)	P3	P3	-	-	-
	3.0 (10)	P3	-	-	-	-
	3.3 (11)	P3	-	-	-	-
	3.6 (12)	P3	-	-	-	-
	3.9 (13)	P3	-	-	-	-
	4.2 (14)	-	-	-	-	-
	4.5 (15)	-	-	-	-	-
	4.8 (16)	-	-	-	-	-

* SEE NOTE 1.

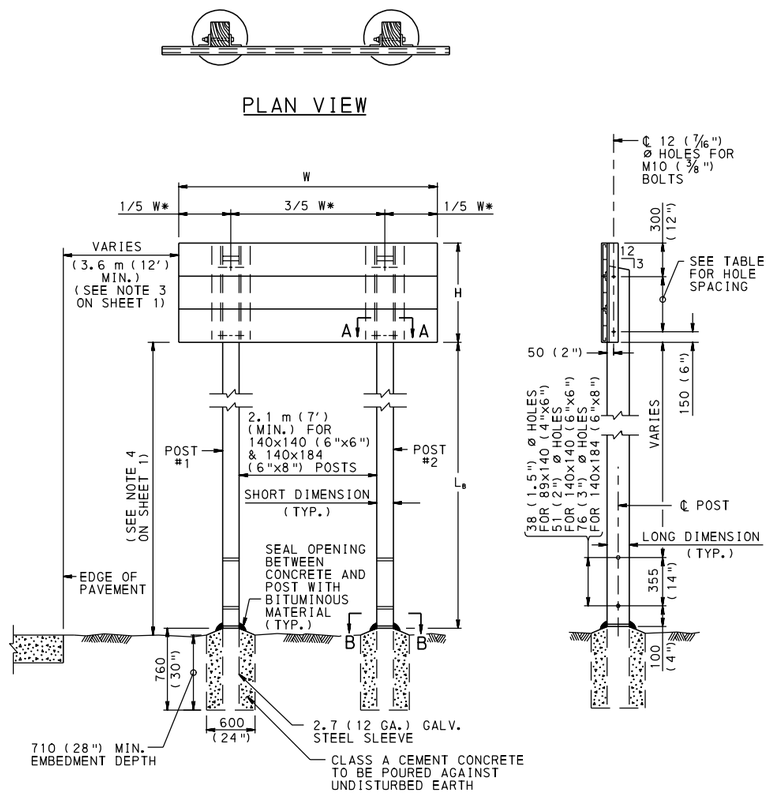

SIGN ELEVATION

END VIEW

METRIC UNITS

ANGLE CONNECTION BOLT SPACING	
H (m)	SPACES
0.610	1 AT 160.0 mm
0.915	2 AT 232.5 mm
1.220	2 AT 385.0 mm
1.525	3 AT 358.3 mm
1.830	3 AT 460.0 mm

ENGLISH UNITS

ANGLE CONNECTION BOLT SPACING	
H (FT)	SPACES
2	1 AT 6"
3	2 AT 9"
4	2 AT 15"
5	3 AT 14"
6	3 AT 18"

TABLE FOR HOLE SPACING

LEGEND:

P1 = 89x140 (4"x6")
P2 = 140x140 (6"x6")
P3 = 140x184 (6"x8")

POST SELECTION EXAMPLE

FOR A SIGN WHERE

W = 1.8 m (6')
H = 0.610 m (2')
L_B = 3.9 m (13')

TWO P1 = 89x140 (4"x6") WOOD POSTS ARE REQUIRED.

NOTES:

1. POSTS IN THE SELECTION TABLE WITH AN "*" MUST HAVE A MINIMUM CLEAR SPACING OF 2.1 m (7') BETWEEN POSTS BY INCREASING THE 3/5 W SPACING. THE REMAINING SIGN WIDTH "W" SHOULD BE EQUALLY DISTRIBUTED TO THE OVERHANGS.
2. SEE SHEET 1 FOR ADDITIONAL NOTES.
3. SEE SHEET 4 FOR SECTIONS AND ERECTION DETAILS.
4. ALL DIMENSIONS ARE IN MILLIMETERS UNLESS OTHERWISE NOTED. ENGLISH UNITS IN PARENTHESIS ( ).
5. EITHER ALL METRIC OR ALL ENGLISH UNITS MUST BE USED ON PLANS. METRIC AND ENGLISH UNITS SHOWN MAY NOT BE MIXED.

COMMONWEALTH OF PENNSYLVANIA
DEPARTMENT OF TRANSPORTATION
BUREAU OF HIGHWAY SAFETY AND TRAFFIC ENGINEERING

POST-MOUNTED SIGNS, TYPE E

WOOD POSTS SELECTION TABLES ERECTION DETAILS

RECOMMENDED MAY 25, 2007
Glenn C Rowe
CHIEF, TRAFFIC ENGINEERING AND OPERATIONS DIVISION

RECOMMENDED MAY 25, 2007
M. G. Patel
CHIEF HIGHWAY ENGINEER

SHT. 2 OF 5

TC-8702E

POST SELECTION TABLE - THREE POSTS					
W m (FT)	L_B m (FT)	HEIGHT "H" IN m (FT)			
		0.610 (2)	0.915 (3)	1.220 (4)	1.525 (5)
6.6 (22)	1.8 (6)	P1	P2*	P3*	P3*
	2.1 (7)	P1	P3*	P3*	-
	2.4 (8)	P2*	P3*	P3*	-
	2.7 (9)	P2*	P3*	-	-
	3.0 (10)	P3*	P3*	-	-
	3.3 (11)	P3*	P3*	-	-
	3.6 (12)	P3*	-	-	-
	3.9 (13)	P3*	-	-	-
	4.2 (14)	P3*	-	-	-
	4.5 (15)	P3*	-	-	-
	4.8 (16)	-	-	-	-
	5.1 (17)	-	-	-	-
	5.4 (18)	-	-	-	-
6.9 (23)	1.8 (6)	P1	P2	P3	P3
	2.1 (7)	P2	P3	P3	-
	2.4 (8)	P2	P3	P3	-
	2.7 (9)	P2	P3	-	-
	3.0 (10)	P3	P3	-	-
	3.3 (11)	P3	P3	-	-
	3.6 (12)	P3	-	-	-
	3.9 (13)	P3	-	-	-
	4.2 (14)	P3	-	-	-
	4.5 (15)	-	-	-	-
	4.8 (16)	-	-	-	-
	5.1 (17)	-	-	-	-
	5.4 (18)	-	-	-	-
7.2 (24)	1.8 (6)	P1	P2	P3	P3
	2.1 (7)	P2	P3	P3	-
	2.4 (8)	P2	P3	P3	-
	2.7 (9)	P3	P3	-	-
	3.0 (10)	P3	P3	-	-
	3.3 (11)	P3	P3	-	-
	3.6 (12)	P3	-	-	-
	3.9 (13)	P3	-	-	-
	4.2 (14)	P3	-	-	-
	4.5 (15)	-	-	-	-
	4.8 (16)	-	-	-	-
	5.1 (17)	-	-	-	-
	5.4 (18)	-	-	-	-
7.5 (25)	1.8 (6)	P1	P3	P3	-
	2.1 (7)	P2	P3	P3	-
	2.4 (8)	P2	P3	-	-
	2.7 (9)	P3	P3	-	-
	3.0 (10)	P3	P3	-	-
	3.3 (11)	P3	-	-	-
	3.6 (12)	P3	-	-	-
	3.9 (13)	P3	-	-	-
	4.2 (14)	P3	-	-	-
	4.5 (15)	-	-	-	-
	4.8 (16)	-	-	-	-
	5.1 (17)	-	-	-	-
	5.4 (18)	-	-	-	-
7.8 (26)	1.8 (6)	P1	P3	P3	-
	2.1 (7)	P2	P3	P3	-
	2.4 (8)	P2	P3	-	-
	2.7 (9)	P3	P3	-	-
	3.0 (10)	P3	P3	-	-
	3.3 (11)	P3	-	-	-
	3.6 (12)	P3	-	-	-
	3.9 (13)	P3	-	-	-
	4.2 (14)	-	-	-	-
	4.5 (15)	-	-	-	-
	4.8 (16)	-	-	-	-
	5.1 (17)	-	-	-	-
	5.4 (18)	-	-	-	-

POST SELECTION TABLE - THREE POSTS					
W m (FT)	L_B m (FT)	HEIGHT "H" IN m (FT)			
		0.610 (2)	0.915 (3)	1.220 (4)	1.525 (5)
8.1 (27)	1.8 (6)	P2	P3	P3	-
	2.1 (7)	P2	P3	P3	-
	2.4 (8)	P2	P3	-	-
	2.7 (9)	P3	P3	-	-
	3.0 (10)	P3	P3	-	-
	3.3 (11)	P3	-	-	-
	3.6 (12)	P3	-	-	-
	3.9 (13)	P3	-	-	-
	4.2 (14)	-	-	-	-
	4.5 (15)	-	-	-	-
	4.8 (16)	-	-	-	-
	5.1 (17)	-	-	-	-
	5.4 (18)	-	-	-	-
8.4 (28)	1.8 (6)	P2	P3	P3	-
	2.1 (7)	P2	P3	P3	-
	2.4 (8)	P3	P3	-	-
	2.7 (9)	P3	P3	-	-
	3.0 (10)	P3	-	-	-
	3.3 (11)	P3	-	-	-
	3.6 (12)	P3	-	-	-
	3.9 (13)	P3	-	-	-
	4.2 (14)	-	-	-	-
	4.5 (15)	-	-	-	-
	4.8 (16)	-	-	-	-
	5.1 (17)	-	-	-	-
	5.4 (18)	-	-	-	-
8.7 (29)	1.8 (6)	P2	P3	P3	-
	2.1 (7)	P2	P3	-	-
	2.4 (8)	P3	P3	-	-
	2.7 (9)	P3	P3	-	-
	3.0 (10)	P3	-	-	-
	3.3 (11)	P3	-	-	-
	3.6 (12)	P3	-	-	-
	3.9 (13)	-	-	-	-
	4.2 (14)	-	-	-	-
	4.5 (15)	-	-	-	-
	4.8 (16)	-	-	-	-
	5.1 (17)	-	-	-	-
	5.4 (18)	-	-	-	-
9.0 (30)	1.8 (6)	P2	P3	P3	-
	2.1 (7)	P2	P3	-	-
	2.4 (8)	P3	P3	-	-
	2.7 (9)	P3	P3	-	-
	3.0 (10)	P3	-	-	-
	3.3 (11)	P3	-	-	-
	3.6 (12)	P3	-	-	-
	3.9 (13)	-	-	-	-
	4.2 (14)	-	-	-	-
	4.5 (15)	-	-	-	-
	4.8 (16)	-	-	-	-
	5.1 (17)	-	-	-	-
	5.4 (18)	-	-	-	-

* SEE NOTE 1.

LEGEND:

P1 = 89x140 (4"x6")
P2 = 140x140 (6"x6")
P3 = 140x184 (6"x8")

POST SELECTION EXAMPLE

FOR A SIGN WHERE

W = 6.6 m (22')
H = 0.610 m (2')
L_B = 4.5 m (15')

THREE P3 = 140x184 (6"x8") WOOD POSTS ARE REQUIRED.

PLAN VIEW

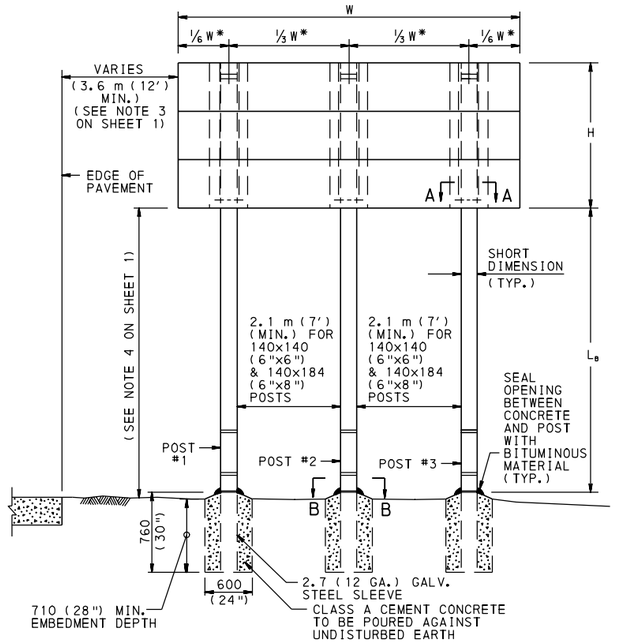

SIGN ELEVATION

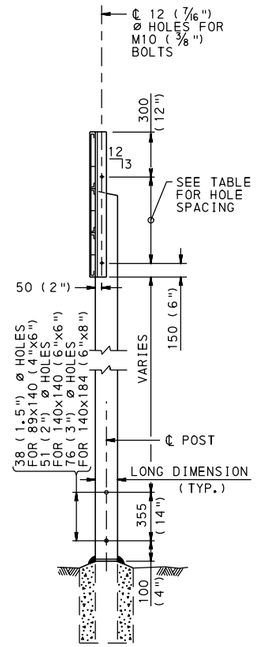

END VIEW

METRIC UNITS	
ANGLE CONNECTION BOLT SPACING	
H (m)	SPACES
0.610	1 AT 160.0 mm
0.915	2 AT 232.5 mm
1.220	2 AT 385.0 mm
1.525	3 AT 358.3 mm

ENGLISH UNITS	
ANGLE CONNECTION BOLT SPACING	
H (FT)	SPACES
2	1 AT 6"
3	2 AT 9"
4	2 AT 15"
5	3 AT 14"

TABLE FOR HOLE SPACING

NOTES:

1. POSTS IN THE SELECTION TABLE WITH AN "*" MUST HAVE A MINIMUM CLEAR SPACING OF 2.1 m (7') BETWEEN POSTS BY INCREASING THE 3/5 W SPACING. THE REMAINING SIGN WIDTH "W" SHOULD BE EQUALLY DISTRIBUTED TO THE OVERHANGS.
2. SEE SHEET 1 FOR ADDITIONAL NOTES.
3. SEE SHEET 4 FOR SECTIONS AND ERECTION DETAILS.
4. ALL DIMENSIONS ARE IN MILLIMETERS UNLESS OTHERWISE NOTED. ENGLISH UNITS IN PARENTHESIS ( ).
5. EITHER ALL METRIC OR ALL ENGLISH UNITS MUST BE USED ON PLANS. METRIC AND ENGLISH UNITS SHOWN MAY NOT BE MIXED.

COMMONWEALTH OF PENNSYLVANIA
DEPARTMENT OF TRANSPORTATION
BUREAU OF HIGHWAY SAFETY AND TRAFFIC ENGINEERING

POST-MOUNTED SIGNS, TYPE E

WOOD POSTS SELECTION TABLES ERECTION DETAILS

RECOMMENDED MAY 25, 2007
Glen C Rowe
CHIEF, TRAFFIC ENGINEERING AND OPERATIONS DIVISION

RECOMMENDED MAY 25, 2007
CHIEF HIGHWAY ENGINEER

SHT. 3 OF 5

TC-8702E

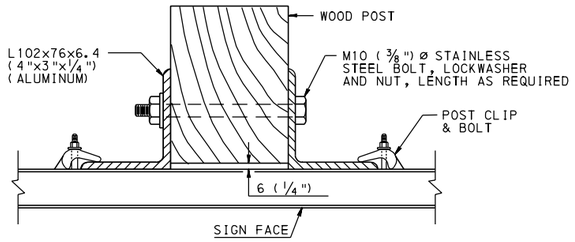

SECTION A-A

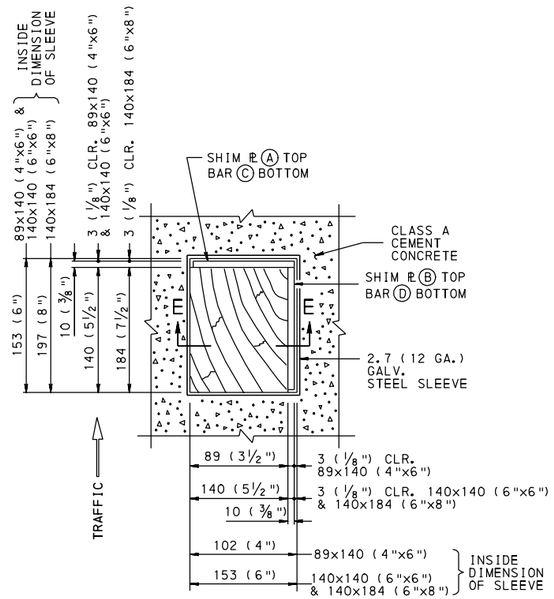

SECTION B-B

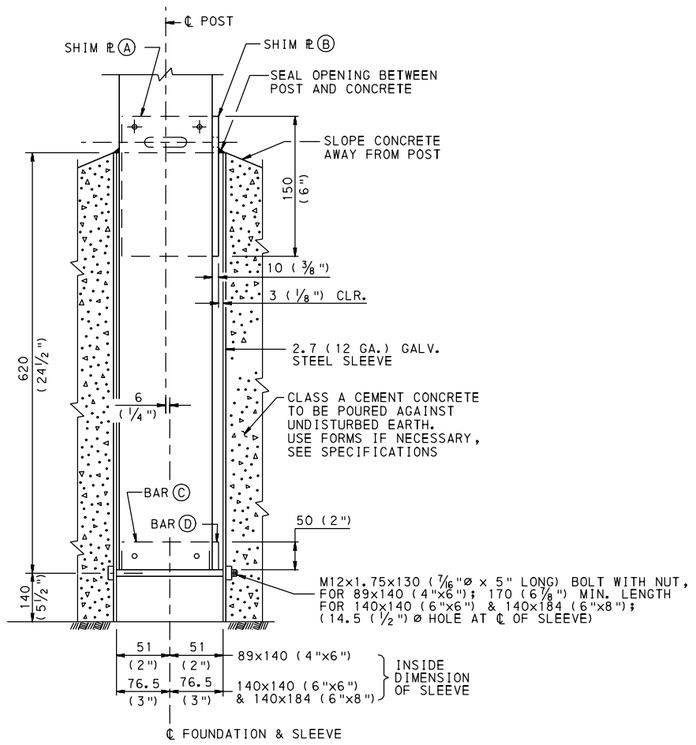

SECTION E-E

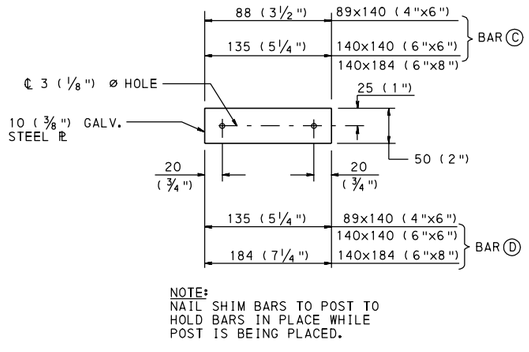

NOTE:
NAIL SHIM BARS TO POST TO
HOLD BARS IN PLACE WHILE
POST IS BEING PLACED.

SHIM BAR Ⓒ
SHIM BAR Ⓓ

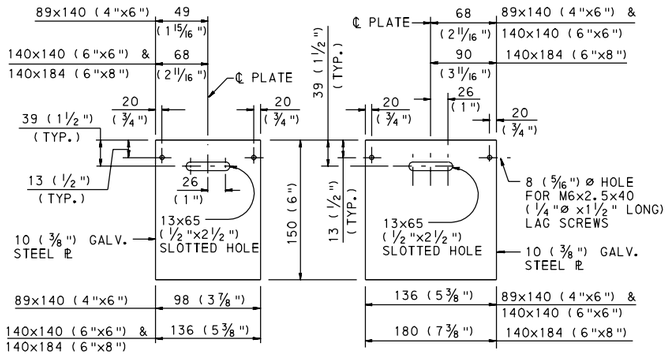

SHIM PLATE Ⓐ SHIM PLATE Ⓑ

NOTES:

1. ALL DIMENSIONS ARE IN MILLIMETERS UNLESS OTHERWISE NOTED. ENGLISH UNITS IN PARENTHESIS ( ).
2. EITHER ALL METRIC OR ALL ENGLISH UNITS MUST BE USED ON PLANS. METRIC AND ENGLISH UNITS SHOWN MAY NOT BE MIXED.
3. STEEL USED FOR SLEEVES AND SHIMS SHALL HAVE A MINIMUM YIELD STRENGTH OF 36 KSI.
4. STAINLESS STEEL BOLT, LOCKWASHER AND NUT SHALL BE AISI TYPE 304 STEEL AND MEET ASTM A320.

COMMONWEALTH OF PENNSYLVANIA
DEPARTMENT OF TRANSPORTATION
BUREAU OF HIGHWAY SAFETY AND TRAFFIC ENGINEERING

POST-MOUNTED SIGNS, TYPE E

WOOD POSTS ERECTION DETAILS

RECOMMENDED MAY 25, 2007
Glenn C. Rowe
CHIEF, TRAFFIC ENGINEERING AND OPERATIONS DIVISION

RECOMMENDED MAY 25, 2007
M. L. Patel
CHIEF HIGHWAY ENGINEER

POST SELECTION TABLE - TWO POSTS						
W m (FT)	L_B m (FT)	HEIGHT "H" IN m (FT)				
		0.610 (2)	0.915 (3)	1.220 (4)	1.525 (5)	1.830 (6)
1.8 (6)	1.8 (6)	P1	P1	P1	P1	-
	2.1 (7)	P1	P1	P1	-	-
	2.4 (8)	P1	P1	P1	-	-
	2.7 (9)	P1	P1	-	-	-
	3.0 (10)	P1	P1	-	-	-
	3.3 (11)	P1	-	-	-	-
	3.6 (12)	P1	-	-	-	-
	3.9 (13)	P1	-	-	-	-
	4.2 (14)	-	-	-	-	-
	4.5 (15)	-	-	-	-	-
	4.8 (16)	-	-	-	-	-
2.1 (7)	1.8 (6)	P1	P1	P1	-	-
	2.1 (7)	P1	P1	P1	-	-
	2.4 (8)	P1	P1	-	-	-
	2.7 (9)	P1	P1	-	-	-
	3.0 (10)	P1	-	-	-	-
	3.3 (11)	P1	-	-	-	-
	3.6 (12)	P1	-	-	-	-
	3.9 (13)	-	-	-	-	-
	4.2 (14)	-	-	-	-	-
	4.5 (15)	-	-	-	-	-
	4.8 (16)	-	-	-	-	-
2.4 (8)	1.8 (6)	P1	P1	P1	-	-
	2.1 (7)	P1	P1	-	-	-
	2.4 (8)	P1	P1	-	-	-
	2.7 (9)	P1	-	-	-	-
	3.0 (10)	P1	-	-	-	-
	3.3 (11)	P1	-	-	-	-
	3.6 (12)	-	-	-	-	-
	3.9 (13)	-	-	-	-	-
	4.2 (14)	-	-	-	-	-
	4.5 (15)	-	-	-	-	-
	4.8 (16)	-	-	-	-	-
2.7 (9)	1.8 (6)	P1	P1	P2 *	P3 *	P3 *
	2.1 (7)	P1	P1	P2 *	P3 *	P3 *
	2.4 (8)	P1	P2 *	P3 *	P3 *	P3 *
	2.7 (9)	P1	P2 *	P3 *	P3 *	P3 *
	3.0 (10)	P1	P2 *	P3 *	P3 *	-
	3.3 (11)	P1	P3 *	P3 *	P3 *	-
	3.6 (12)	P2 *	P3 *	P3 *	-	-
	3.9 (13)	P2 *	P3 *	P3 *	-	-
	4.2 (14)	P3 *	P3 *	-	-	-
	4.5 (15)	P3 *	P3 *	-	-	-
	4.8 (16)	P3 *	-	-	-	-
3.0 (10)	1.8 (6)	P1	P1	P2 *	P3 *	P3 *
	2.1 (7)	P1	P1	P3 *	P3 *	P3 *
	2.4 (8)	P1	P2 *	P3 *	P3 *	P3 *
	2.7 (9)	P1	P2 *	P3 *	P3 *	-
	3.0 (10)	P1	P3 *	P3 *	P3 *	-
	3.3 (11)	P2 *	P3 *	P3 *	-	-
	3.6 (12)	P2 *	P3 *	P3 *	-	-
	3.9 (13)	P3 *	P3 *	-	-	-
	4.2 (14)	P3 *	P3 *	-	-	-
	4.5 (15)	P3 *	-	-	-	-
	4.8 (16)	P3 *	-	-	-	-
3.3 (11)	1.8 (6)	P1	P1	P2 *	P3 *	P3 *
	2.1 (7)	P1	P2 *	P3 *	P3 *	P3 *
	2.4 (8)	P1	P2 *	P3 *	P3 *	-
	2.7 (9)	P1	P3 *	P3 *	P3 *	-
	3.0 (10)	P2 *	P3 *	P3 *	-	-
	3.3 (11)	P2 *	P3 *	P3 *	-	-
	3.6 (12)	P3 *	P3 *	-	-	-
	3.9 (13)	P3 *	P3 *	-	-	-
	4.2 (14)	P3 *	P3 *	-	-	-
	4.5 (15)	P3 *	-	-	-	-
	4.8 (16)	P3 *	-	-	-	-
3.6 (12)	1.8 (6)	P1	P2 *	P3 *	P3 *	P3 *
	2.1 (7)	P1	P2 *	P3 *	P3 *	-
	2.4 (8)	P1	P2 *	P3 *	P3 *	-
	2.7 (9)	P2 *	P3 *	P3 *	-	-
	3.0 (10)	P2 *	P3 *	P3 *	-	-
	3.3 (11)	P2 *	P3 *	-	-	-
	3.6 (12)	P3 *	P3 *	-	-	-
	3.9 (13)	P3 *	P3 *	-	-	-
	4.2 (14)	P3 *	-	-	-	-
	4.5 (15)	P3 *	-	-	-	-
	4.8 (16)	P3 *	-	-	-	-
3.9 (13)	1.8 (6)	P1	P2	P3	P3	-
	2.1 (7)	P1	P2	P3	P3	-
	2.4 (8)	P1	P3	P3	-	-
	2.7 (9)	P2	P3	P3	-	-
	3.0 (10)	P2	P3	P3	-	-
	3.3 (11)	P3	P3	-	-	-
	3.6 (12)	P3	P3	-	-	-
	3.9 (13)	P3	P3	-	-	-
	4.2 (14)	P3	-	-	-	-
	4.5 (15)	P3	-	-	-	-
	4.8 (16)	P3	-	-	-	-

POST SELECTION TABLE - TWO POSTS						
W m (FT)	L_B m (FT)	HEIGHT "H" IN m (FT)				
		0.610 (2)	0.915 (3)	1.220 (4)	1.525 (5)	1.830 (6)
4.2 (14)	1.8 (6)	P1	P2	P3	P3	-
	2.1 (7)	P1	P2	P3	P3	-
	2.4 (8)	P2	P3	P3	-	-
	2.7 (9)	P2	P3	P3	-	-
	3.0 (10)	P2	P3	-	-	-
	3.3 (11)	P3	P3	-	-	-
	3.6 (12)	P3	P3	-	-	-
	3.9 (13)	P3	-	-	-	-
	4.2 (14)	P3	-	-	-	-
	4.5 (15)	P3	-	-	-	-
	4.8 (16)	-	-	-	-	-
4.5 (15)	1.8 (6)	P1	P2	P3	P3	-
	2.1 (7)	P1	P3	P3	-	-
	2.4 (8)	P2	P3	P3	-	-
	2.7 (9)	P2	P3	-	-	-
	3.0 (10)	P3	P3	-	-	-
	3.3 (11)	P3	P3	-	-	-
	3.6 (12)	P3	-	-	-	-
	3.9 (13)	P3	-	-	-	-
	4.2 (14)	P3	-	-	-	-
	4.5 (15)	P3	-	-	-	-
	4.8 (16)	-	-	-	-	-
4.8 (16)	1.8 (6)	P1	P2	P3	P3	-
	2.1 (7)	P2	P3	P3	-	-
	2.4 (8)	P2	P3	P3	-	-
	2.7 (9)	P2	P3	-	-	-
	3.0 (10)	P3	P3	-	-	-
	3.3 (11)	P3	P3	-	-	-
	3.6 (12)	P3	-	-	-	-
	3.9 (13)	P3	-	-	-	-
	4.2 (14)	P3	-	-	-	-
	4.5 (15)	P3	-	-	-	-
	4.8 (16)	-	-	-	-	-
5.1 (17)	1.8 (6)	P1	P3	P3	-	-
	2.1 (7)	P2	P3	P3	-	-
	2.4 (8)	P2	P3	-	-	-
	2.7 (9)	P3	P3	-	-	-
	3.0 (10)	P3	P3	-	-	-
	3.3 (11)	P3	-	-	-	-
	3.6 (12)	P3	-	-	-	-
	3.9 (13)	P3	-	-	-	-
	4.2 (14)	P3	-	-	-	-
	4.5 (15)	-	-	-	-	-
	4.8 (16)	-	-	-	-	-
5.4 (18)	1.8 (6)	P1	P3	P3	-	-
	2.1 (7)	P2	P3	P3	-	-
	2.4 (8)	P2	P3	-	-	-
	2.7 (9)	P3	P3	-	-	-
	3.0 (10)	P3	P3	-	-	-
	3.3 (11)	P3	-	-	-	-
	3.6 (12)	P3	-	-	-	-
	3.9 (13)	P3	-	-	-	-
	4.2 (14)	P3	-	-	-	-
	4.5 (15)	-	-	-	-	-
	4.8 (16)	-	-	-	-	-
5.7 (19)	1.8 (6)	P2	P3	P3	-	-
	2.1 (7)	P2	P3	P3	-	-
	2.4 (8)	P2	P3	-	-	-
	2.7 (9)	P3	P3	-	-	-
	3.0 (10)	P3	-	-	-	-
	3.3 (11)	P3	-	-	-	-
	3.6 (12)	P3	-	-	-	-
	3.9 (13)	P3	-	-	-	-
	4.2 (14)	-	-	-	-	-
	4.5 (15)	-	-	-	-	-
	4.8 (16)	-	-	-	-	-
6.0 (20)	1.8 (6)	P2	P3	P3	-	-
	2.1 (7)	P2	P3	-	-	-
	2.4 (8)	P3	P3	-	-	-
	2.7 (9)	P3	P3	-	-	-
	3.0 (10)	P3	-	-	-	-
	3.3 (11)	P3	-	-	-	-
	3.6 (12)	P3	-	-	-	-
	3.9 (13)	P3	-	-	-	-
	4.2 (14)	-	-	-	-	-
	4.5 (15)	-	-	-	-	-
	4.8 (16)	-	-	-	-	-

* SEE NOTE 1.

POST SELECTION EXAMPLE

FOR A SIGN WHERE

W = 1.8 m (6')
H = 0.610 m (2')
L_B = 3.9 m (13')

TWO P1 = 89x140 (4"x6") WOOD POSTS ARE REQUIRED.

LEGEND:

P1 = 89x140 (4"x6")
P2 = 140x140 (6"x6")
P3 = 140x184 (6"x8")

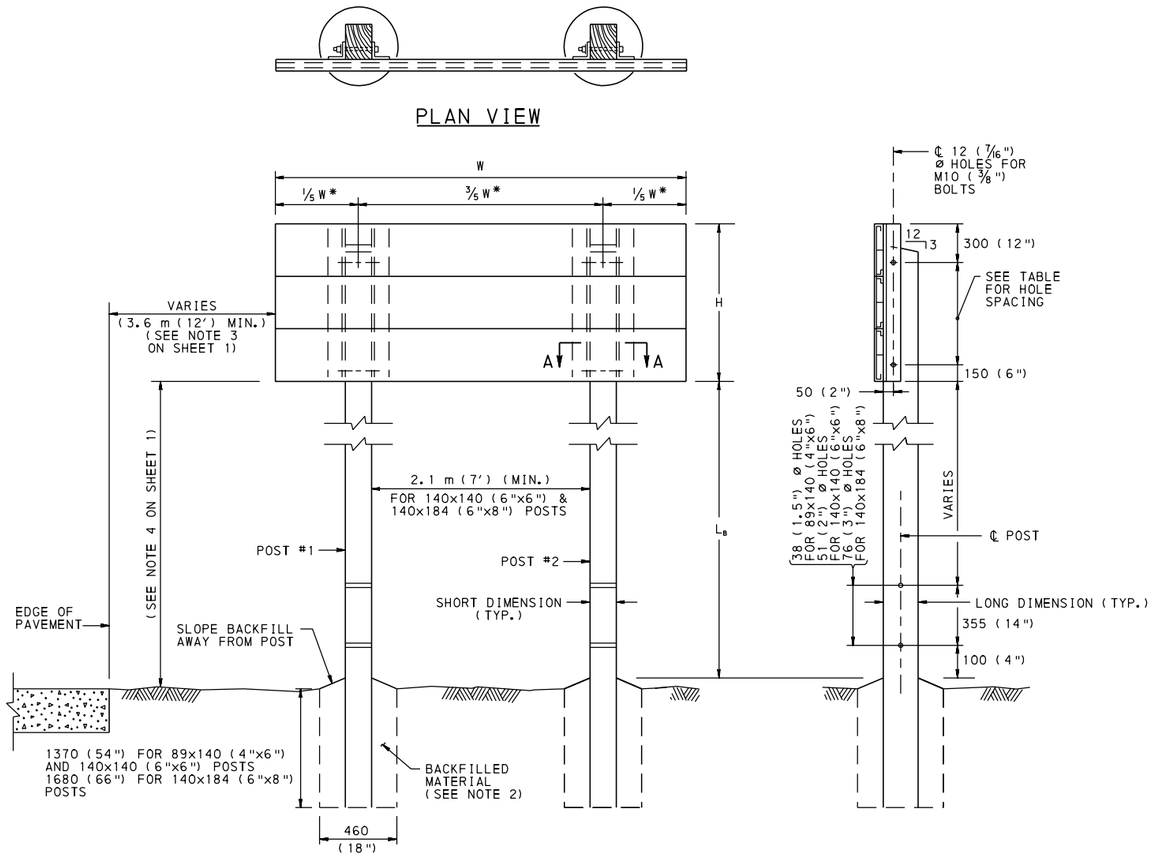

METRIC UNITS

ANGLE CONNECTION BOLT SPACING	
H (m)	SPACES
0.610	1 AT 160.0 mm
0.915	2 AT 232.5 mm
1.220	2 AT 385.0 mm
1.525	3 AT 358.3 mm
1.830	3 AT 460.0 mm

ENGLISH UNITS

ANGLE CONNECTION BOLT SPACING	
H (FT)	SPACES
2	1 AT 6"
3	2 AT 9"
4	2 AT 15"
5	3 AT 14"
6	3 AT 18"

TABLE FOR HOLE SPACING

NOTES:

1. POSTS IN THE SELECTION TABLE WITH AN "*" MUST HAVE A MINIMUM CLEAR SPACING OF 2.1 m (7') BETWEEN POSTS BY INCREASING THE 3/5 W SPACING. THE REMAINING SIGN WIDTH "W" SHOULD BE EQUALLY DISTRIBUTED TO THE OVERHANGS.
2. DRILL OR EXCAVATE A HOLE OF SUITABLE DIMENSIONS AND DEPTH TO PLACE THE POST AT GRADE. SET THE POST AND BACKFILL TO THE GROUND LINE USING ACCEPTABLE EMBANKMENT MATERIAL, THOROUGHLY COMPACTED IN 150 mm (6") LAYERS.
3. SEE SHEET 1 FOR ADDITIONAL NOTES.
4. SEE SHEET 4 FOR SECTIONS AND ERECTION DETAILS.
5. ALL DIMENSIONS ARE IN MILLIMETERS UNLESS OTHERWISE NOTED. ENGLISH UNITS IN PARENTHESIS ( ).
6. EITHER ALL METRIC OR ALL ENGLISH UNITS MUST BE USED ON PLANS. METRIC AND ENGLISH UNITS SHOWN MAY NOT BE MIXED.

COMMONWEALTH OF PENNSYLVANIA
DEPARTMENT OF TRANSPORTATION
BUREAU OF HIGHWAY SAFETY AND TRAFFIC ENGINEERING

POST-MOUNTED SIGNS, TYPE E

WOOD POSTS - DIRECT BURIAL ERECTION DETAILS TEMPORARY USE ONLY

RECOMMENDED MAY 25, 2007
Glenn C Rowe
CHIEF, TRAFFIC ENGINEERING AND OPERATIONS DIVISION

RECOMMENDED MAY 25, 2007
M. C. Patel
CHIEF HIGHWAY ENGINEER

SHT. 5 OF 5

TC-8702E

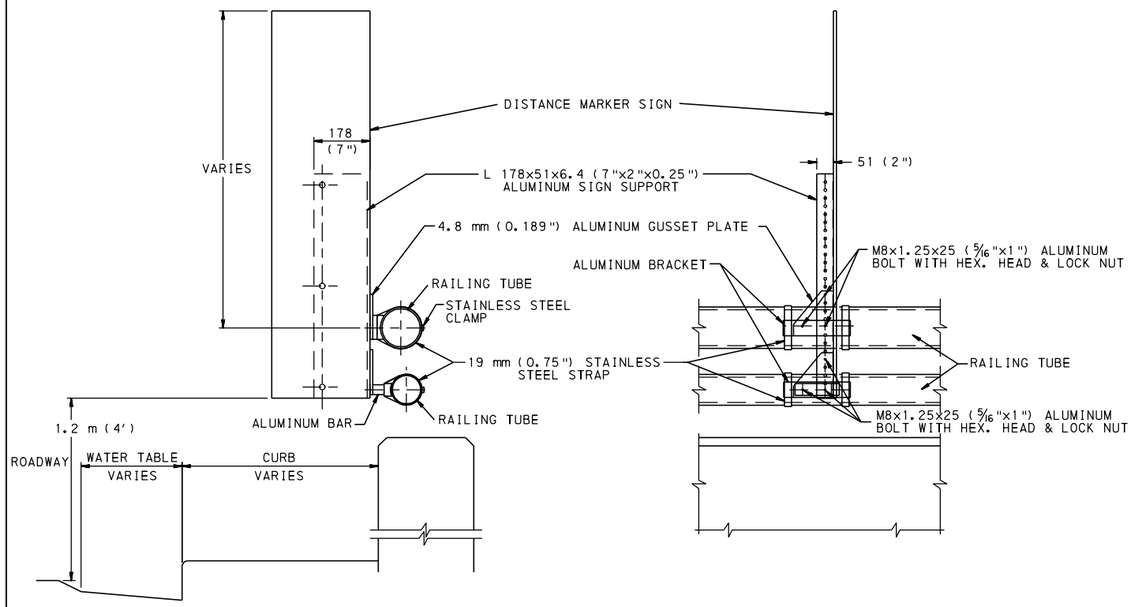

ATTACHMENT OF DISTANCE MARKER ASSEMBLY TO DOUBLE TUBE RAILING

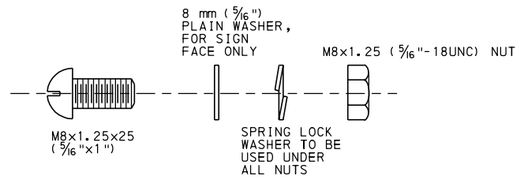

BUTTON HEAD BOLT FOR CONNECTING SIGN TO ANGLE

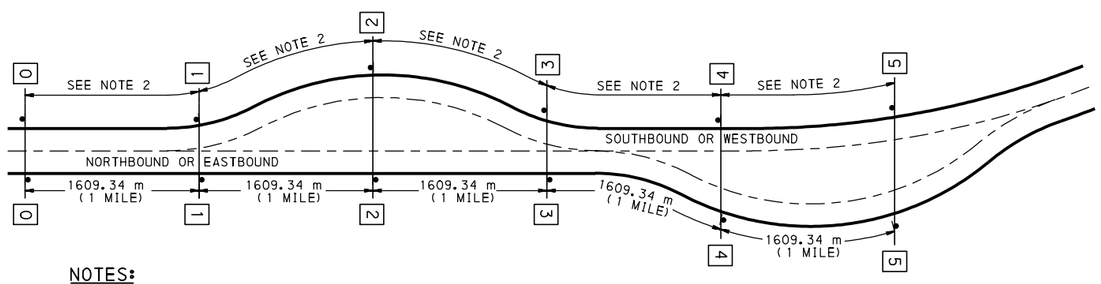

NOTES:

1. IT SHALL BE THE RESPONSIBILITY OF THE ENGINEER TO ACCURATELY ESTABLISH THE LOCATION OF EACH DISTANCE MARKER.
2. MEARUREMENTS TO ACCURATELY ESTABLISH THE LOCATION OF DISTANCE MARKERS IN INCREMENTS OF 1609.34 m (1 MILE) WILL BE TAKEN ALONG THE OUTSIDE EDGE OF THE PAVEMENT OF NORTHBOUND OR EASTBOUND ROADWAYS ONLY. DISTANCE MARKERS ON SOUTHBOUND OR WESTBOUND ROADWAYS SHALL BE ERECTED OPPOSITE TO THE DISTANCE MARKER LOCATIONS ESTABLISHED ON THE NORTHBOUND OR EASTBOUND ROADWAYS.

TYPICAL LOCATION OF DISTANCE MARKERS

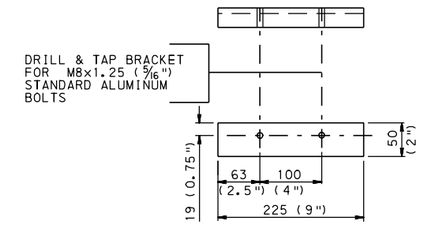

ALUMINUM BRACKET

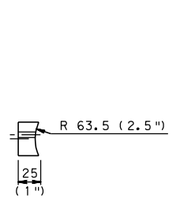

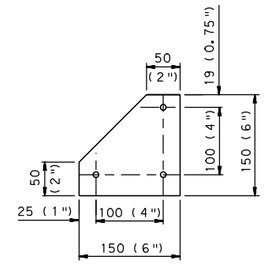

ALUMINUM GUSSET PLATE

DETAILS FOR TOP RAIL

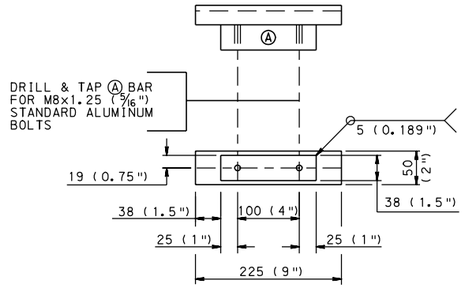

ALUMINUM BRACKET & BAR

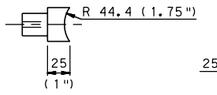

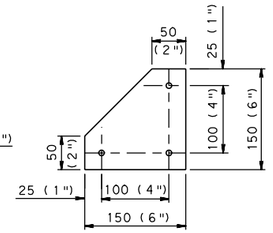

ALUMINUM GUSSET PLATE

DETAILS FOR BOTTOM RAIL

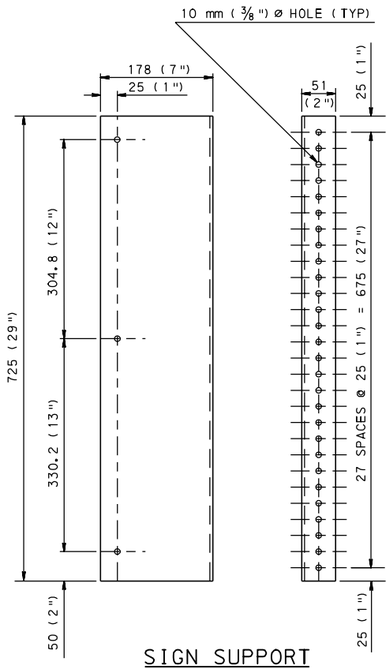

SIGN SUPPORT

NOTES:

1. ALL MATERIAL SHALL BE ALUMINUM ALLOY, UNLESS OTHERWISE NOTED, AND SHALL CONFORM TO THE APPROPIATE ASTM DESIGNATION AND TEMPER AS SPECIFIED IN PUBLICATION 408.
2. ALL STAINLESS STEEL STRAPS AND CLAMPS SHALL CONFORM TO ASTM A167.
3. ALL MATERIALS AND WORKSMANSHIP SHALL BE IN ACCORDANCE WITH PUBLICATION 408.
4. DISTANCE MARKERS WHICH ARE NOT ON BRIDGES SHALL BE INSTALLED ON TYPE B SIGN POSTS AT A 1.2 m (4') HEIGHT.
5. ALL DIMENSIONS ARE IN MILLIMETERS UNLESS OTHERWISE NOTED. ENGLISH UNITS SHOWN IN PARENTHESIS ( ).
6. EITHER ALL METRIC OR ALL ENGLISH UNITS MUST BE USED ON PLANS. METRIC AND ENGLISH UNITS SHOWN MAY NOT BE MIXED.

COMMONWEALTH OF PENNSYLVANIA
DEPARTMENT OF TRANSPORTATION
BUREAU OF HIGHWAY SAFETY AND TRAFFIC ENGINEERING

DISTANCE MARKERS

RECOMMENDED MAY 25, 2007 Glenn C Rowe CHIEF, TRAFFIC ENGINEERING AND OPERATIONS DIVISION	RECOMMENDED MAY 25, 2007 M. C. Patel CHIEF HIGHWAY ENGINEER	SHT. 1 OF 1 TC-8710

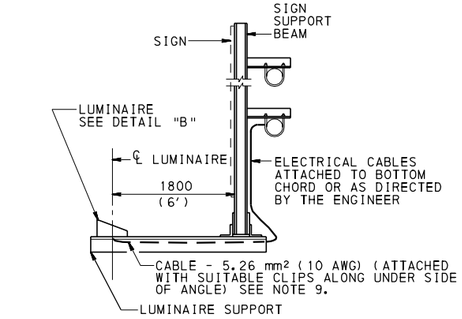

TYPICAL BRACKET MOUNTED LUMINAIRE ON SIGN STRUCTURE

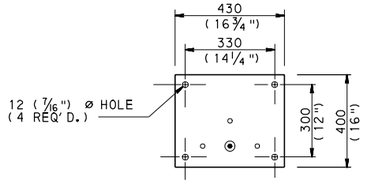

DETAIL "B"

LUMINAIRE MOUNTING BRACKET

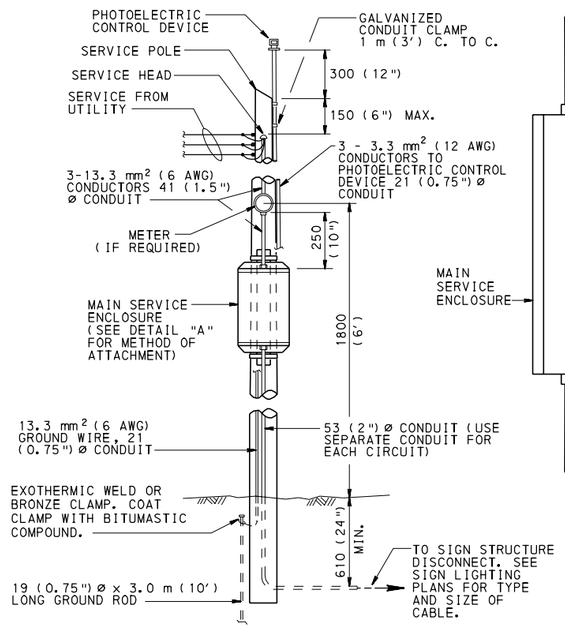

MAIN SERVICE ON SERVICE POLE

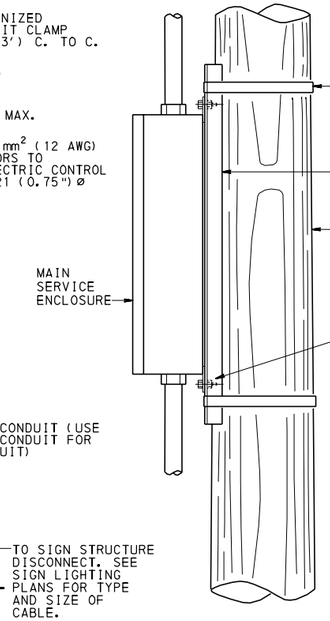

DETAIL "A"

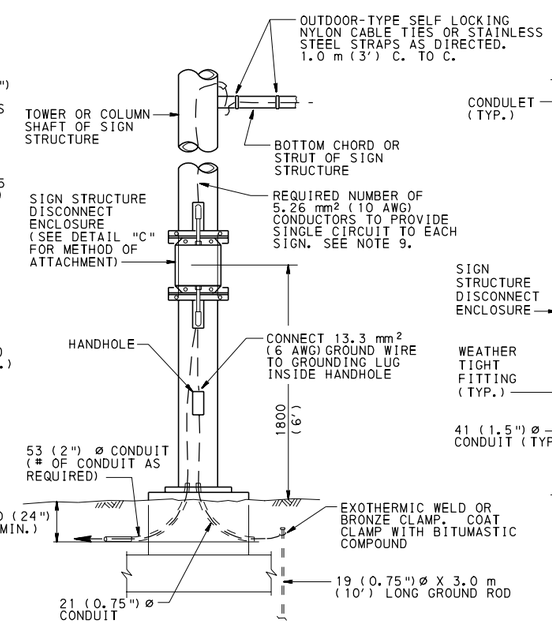

SIGN STRUCTURE DISCONNECT

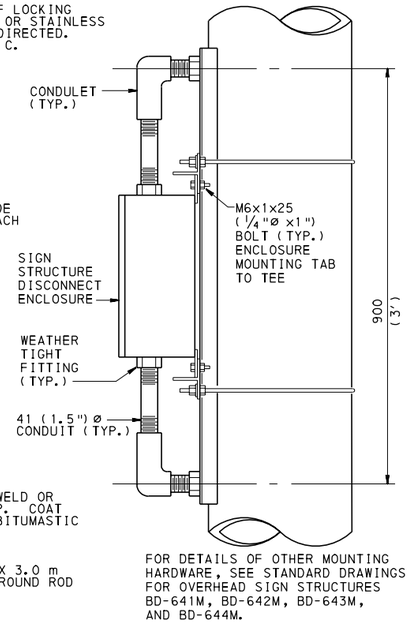

FOR DETAILS OF OTHER MOUNTING HARDWARE, SEE STANDARD DRAWINGS FOR OVERHEAD SIGN STRUCTURES BD-641M, BD-642M, BD-643M, AND BD-644M.

DETAIL "C"

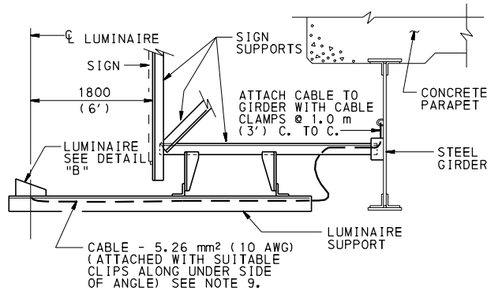

TYPICAL BRACKET MOUNTED LUMINAIRE ON OVERPASS BRIDGE, BRIDGE - MOUNTED SIGN

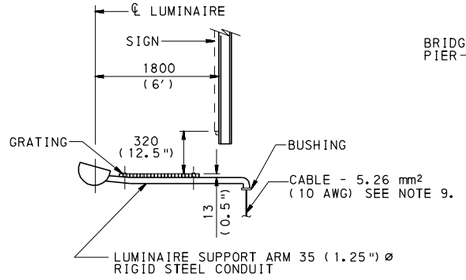

TYPICAL CONDUIT MOUNTED LUMINAIRE ON SIGN STRUCTURE WITH CATWALK*

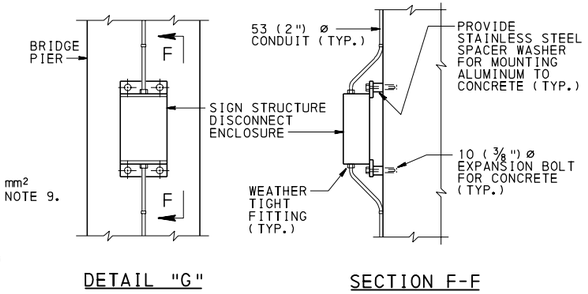

DETAIL "G"

SECTION F-F

* NOTE:
LUMINAIRE MOUNTED ON CONDUIT NOT PERMITTED IF LUMINAIRE WEIGHT IS GREATER THAN 9 kg (20 lb). OTHERWISE MOUNT LUMINAIRE ON ANGLE SUPPORTS

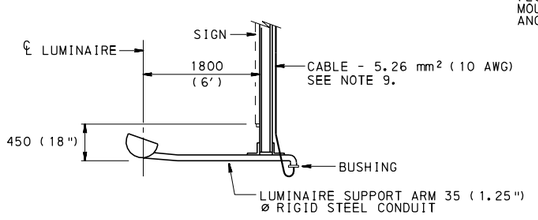

TYPICAL CONDUIT MOUNTED LUMINAIRE ON SIGN STRUCTURE*

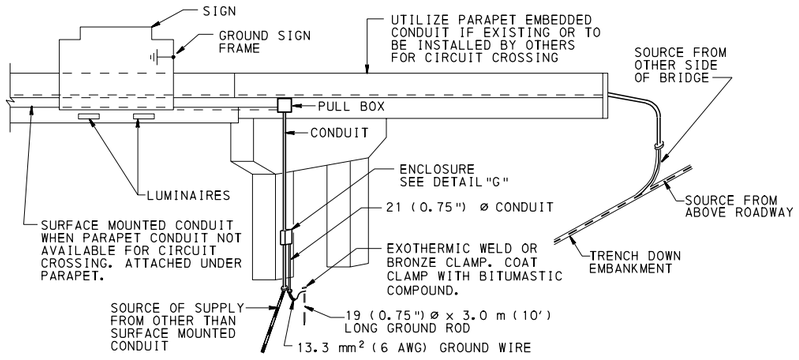

TYPICAL SERVICE FOR LUMINAIRE ON OVERPASS BRIDGE - MOUNTED SIGN

NOTES:

1. PROVIDE COPPER ELECTRIC CONDUCTORS. INCLUDE EQUIPMENT GROUNDING CONDUCTOR WITH ALL CIRCUITS. PROVIDE WITH SAME INSULATION AND SIZE AS CIRCUIT CONDUCTORS.
2. ELECTRIC COMPANY SERVICE DROPS ARE MADE TO THE SERVICE POLE, UNLESS OTHERWISE SPECIFIED, MEETING THE ELECTRIC COMPANY REQUIREMENTS. WHEN SERVICE DROP IS TO SIGN STRUCTURE, THE SIGN STRUCTURE ENCLOSURE WILL CONTAIN ALL NECESSARY SERVICE AND BRANCH CIRCUIT EQUIPMENT.
3. BOND THE EQUIPMENT GROUNDING CONDUCTOR TO THE GROUNDING LUG PROVIDED IN THE HANDHOLE OF THE SIGN STRUCTURE. DO NOT CONNECT N TO G EXCEPT AT SERVICE LOCATION.
4. GROUND THE SIGN FRAME OF OVERPASS BRIDGE-MOUNTED SIGNS.
5. SIGN STRUCTURE DISCONNECT MAY BE OMITTED WHEN THE MAIN SERVICE IS WITHIN 15 m (50′) OF THE SIGN STRUCTURE. PROVIDE BRANCH CIRCUIT PROTECTION WITHIN THE MAIN SERVICE ENCLOSURE.
6. MOUNT EACH REMOTE BALLAST ON THE SIGN SUPPORT STRUCTURE AND IDENTIFY THE SIGN AND LUMINAIRE SERVED. MOUNT OVER SHOULDER WHEN FEASIBLE.
7. PROVIDE ALUMINUM, STAINLESS STEEL OR GALVANIZED STEEL HARDWARE, CONDULETS, BOLTS, ETC. ASSOCIATED WITH MOUNTING ENCLOSURE FOR MAIN SERVICE AND SIGN STRUCTURE DISCONNECT.
8. FOR DETAILS OF LUMINAIRE SUPPORTS, SEE STANDARD DRAWINGS BD-641M, BD-642M, BD-643M AND BD-644M.
9. PROVIDE 5.26 mm² (10 AWG), 2 CONDUCTOR, TYPE TC CABLE FROM THE SIGN ENCLOSURE TO THE LUMINAIRES.
10. ALL DIMENSIONS ARE IN MILLIMETERS UNLESS OTHERWISE NOTED. ENGLISH UNITS IN PARENTHESIS ( ).
11. EITHER ALL METRIC OR ALL ENGLISH UNITS MUST BE USED ON PLANS. METRIC AND ENGLISH UNITS SHOWN MAY NOT BE MIXED.

COMMONWEALTH OF PENNSYLVANIA
DEPARTMENT OF TRANSPORTATION
BUREAU OF HIGHWAY SAFETY AND TRAFFIC ENGINEERING

SIGN LIGHTING

RECOMMENDED MAY 25, 2007
Glenn C Rowe
CHIEF, TRAFFIC ENGINEERING AND OPERATIONS DIVISION

RECOMMENDED MAY 25, 2007
M. Patel
CHIEF HIGHWAY ENGINEER

SHT. 1 OF 5

TC-8715

120 V - 2 WIRE SUPPLY
120 V LUMINAIRE

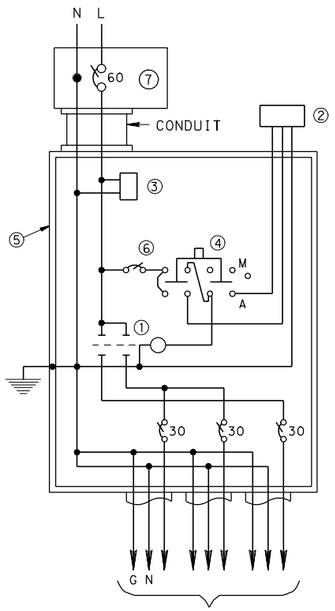

TO SIGN STRUCTURE DISCONNECT SIMILAR TO Ⓐ. NOT MORE THAN 8 LUMINAIRES ON EACH 30 A CIRCUIT.

120/240 V - 3 WIRE SUPPLY
240 V LUMINAIRE

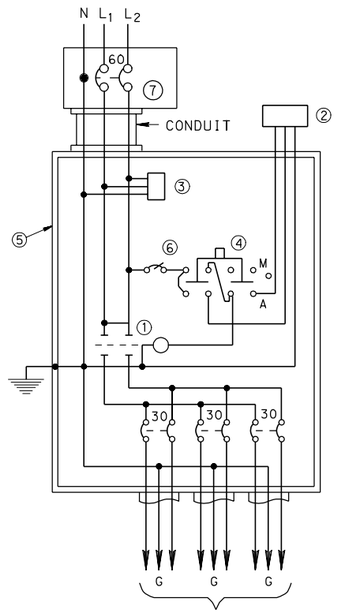

TO SIGN STRUCTURE DISCONNECT SIMILAR TO Ⓑ. NOT MORE THAN 17 LUMINAIRES ON EACH 30 A CIRCUIT.

240/480 V - 3 WIRE SUPPLY
240 V LUMINAIRE

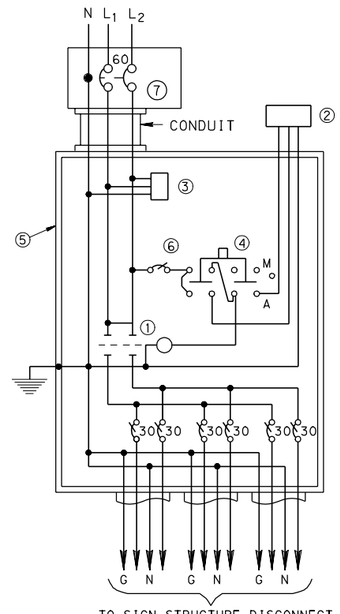

TO SIGN STRUCTURE DISCONNECT SIMILAR TO Ⓒ. NOT MORE THAN 17 LUMINAIRES PER PHASE LEG ON EACH 30 A CIRCUIT.

MAIN SERVICE (TYPICAL)

NOTE: MAIN SERVICE NOT REQUIRED WHEN POWER SUPPLY IS FROM HIGHWAY LIGHTING CIRCUIT.

① TWO POLE, 60 A, LIGHTING CONTACTOR
② PHOTOELECTRIC CONTROL DEVICE
③ LIGHTNING ARRESTOR
④ SELECTOR SWITCH (MANUAL-OFF-AUTO.)
⑤ ENCLOSURE
⑥ 15 A, SINGLE POLE CIRCUIT BREAKER
⑦ SERVICE DISCONNECT

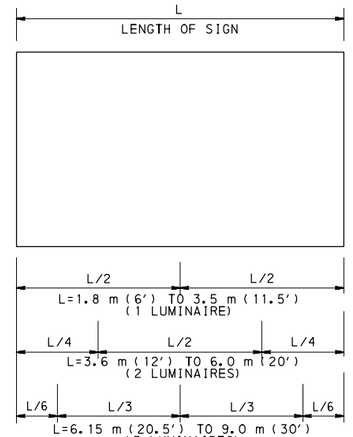

QUANTITY AND LOCATION OF LUMINAIRES

NOTES:

1. PROVIDE A CIRCUIT BREAKER FOR THE MAIN DISCONNECT UNLESS THE POWER COMPANY REQUIRES FUSES.
2. ALL DIMENSIONS ARE IN MILLIMETERS UNLESS OTHERWISE NOTED. ENGLISH UNITS IN PARENTHESIS ( ).
3. EITHER ALL METRIC OR ALL ENGLISH UNITS MUST BE USED ON PLANS. METRIC AND ENGLISH UNITS SHOWN MAY NOT BE MIXED.
4. PROVIDE A MAIN DISCONNECT IN A SEPARATE NEMA 3R OR 4 ENCLOSURE THAT IS LABELED AS "SUITABLE FOR USE AS SERVICE EQUIPMENT". PROVIDE WITH A LOCKABLE COVER AND NO EXTERNAL HANDLE. THE DISCONNECT MAY BE PROVIDED INTEGRAL TO THE CONTROL CABINET IF THE CABINET IS DEAD FRONT AND LABELED AS "SUITABLE FOR USE AS SERVICE EQUIPMENT".

Ⓐ 120 V LUMINAIRE

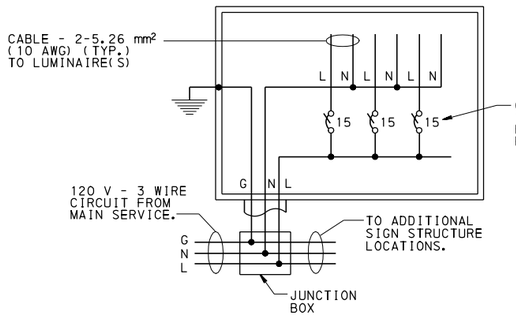

Ⓑ 240 V LUMINAIRE

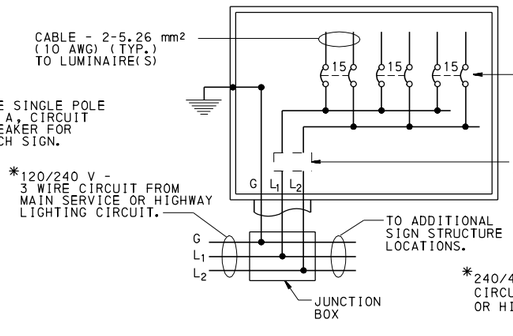

Ⓒ 240 V LUMINAIRE

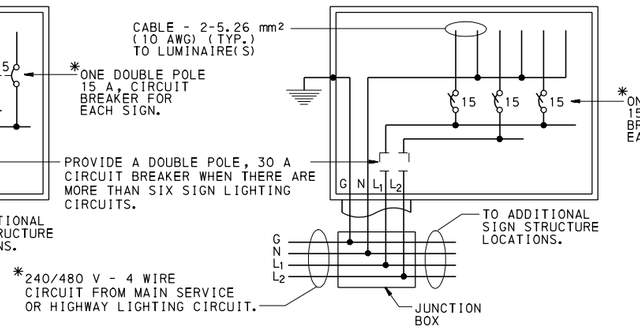

*FOR PROPER PHASE LEG CONNECTION, SEE SIGN LIGHTING PLAN OR HIGHWAY LIGHTING CIRCUIT SCHEMATIC, AS APPLICABLE.

SIGN STRUCTURE DISCONNECT (TYPICAL)

COMMONWEALTH OF PENNSYLVANIA
DEPARTMENT OF TRANSPORTATION
BUREAU OF HIGHWAY SAFETY AND TRAFFIC ENGINEERING

SIGN LIGHTING

RECOMMENDED MAY 25, 2007
Glenn C. Rowe
CHIEF, TRAFFIC ENGINEERING AND OPERATIONS DIVISION

RECOMMENDED MAY 25, 2007
M. G. Patel
CHIEF HIGHWAY ENGINEER

TC-8715

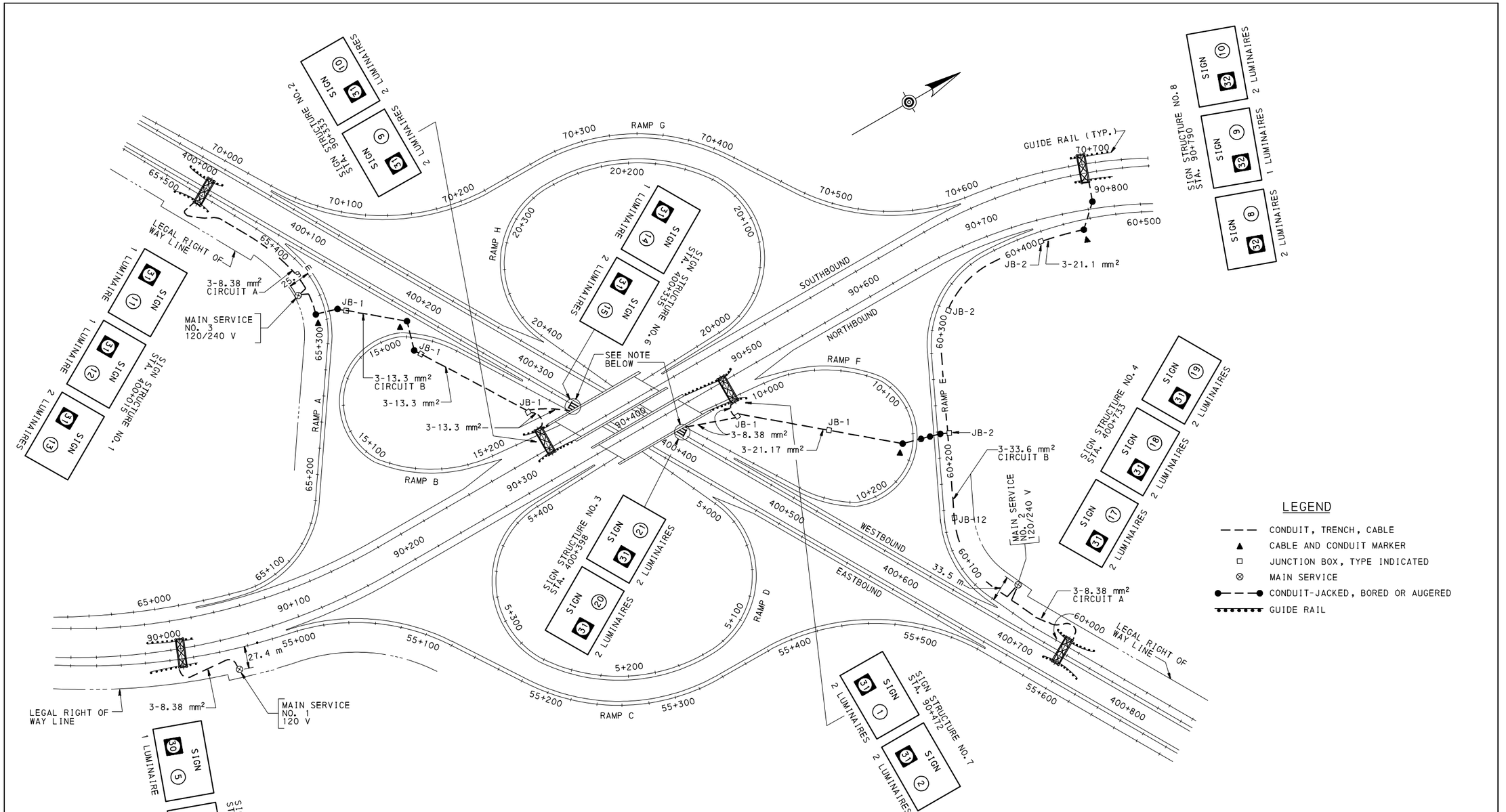

METRIC UNITS

NOTE - BRIDGE MOUNTED SIGNS:

TRENCH FROM JUNCTION BOX DOWN EMBANKMENT TO PIER MOUNTED ENCLOSURE SEE SHEET 2 OF 5, TC-8715.

GENERAL NOTES:

1. QUANTITIES SHOWN ARE FOR ESTIMATING PURPOSE ONLY.
2. COMPLY WITH STANDARD SPECIFICATIONS PUBLICATION 408, SECTIONS 920 & 1102 APPLICABLE TO MATERIAL AND WORK ON THIS PROJECT, AND THE FOLLOWING STANDARD DRAWINGS:

   RC-81M HIGHWAY LIGHTING-JUNCTION BOXES-LIGHT DUTY
   RC-82M HIGHWAY LIGHTING-JUNCTION BOXES-HEAVY DUTY
   RC-84M HIGHWAY LIGHTING-LIGHTING AND ELECTRIC DETAILS
   TC-8715 SIGN LIGHTING

INFORMATION TO DESIGNER:

1. SHOW AS INFORMATION ONLY THE CONDUIT CROSSINGS ON THE ROADWAY PLANS.
2. MAIN SERVICE LOCATIONS MUST HAVE CONFIRMATION FROM LOCAL ELECTRIC UTILITY.
3. SUBMIT CONDUCTOR SIZE CALCULATIONS WITH PLANS FOR APPROVAL.
4. LOCATE MAIN SERVICE OUTSIDE CLEAR ZONE AS FAR FROM ROADWAY AS PRACTICAL.
5. SIGN LIGHTING MAY NOT BE REQUIRED ON ALL OVERHEAD SIGNS. SEE STANDARD DRAWING TC-8701A FOR EXCEPTIONS.
6. WHEN NOT INCLUDED IN OTHER CONTRACTS, PROVIDE FOR SEEDING AND MULCHING OF BACKFILLED TRENCH AND OTHER DISTURBED AREAS.

COMMONWEALTH OF PENNSYLVANIA
DEPARTMENT OF TRANSPORTATION
BUREAU OF HIGHWAY SAFETY AND TRAFFIC ENGINEERING

SIGN LIGHTING PLAN (SAMPLE DRAWING)

RECOMMENDED MAY 25, 2007 Glenn C Rowe CHIEF, TRAFFIC ENGINEERING AND OPERATIONS DIVISION	RECOMMENDED MAY 25, 2007 M. C. Patel CHIEF HIGHWAY ENGINEER	SHT. 3 OF 5 TC-8715

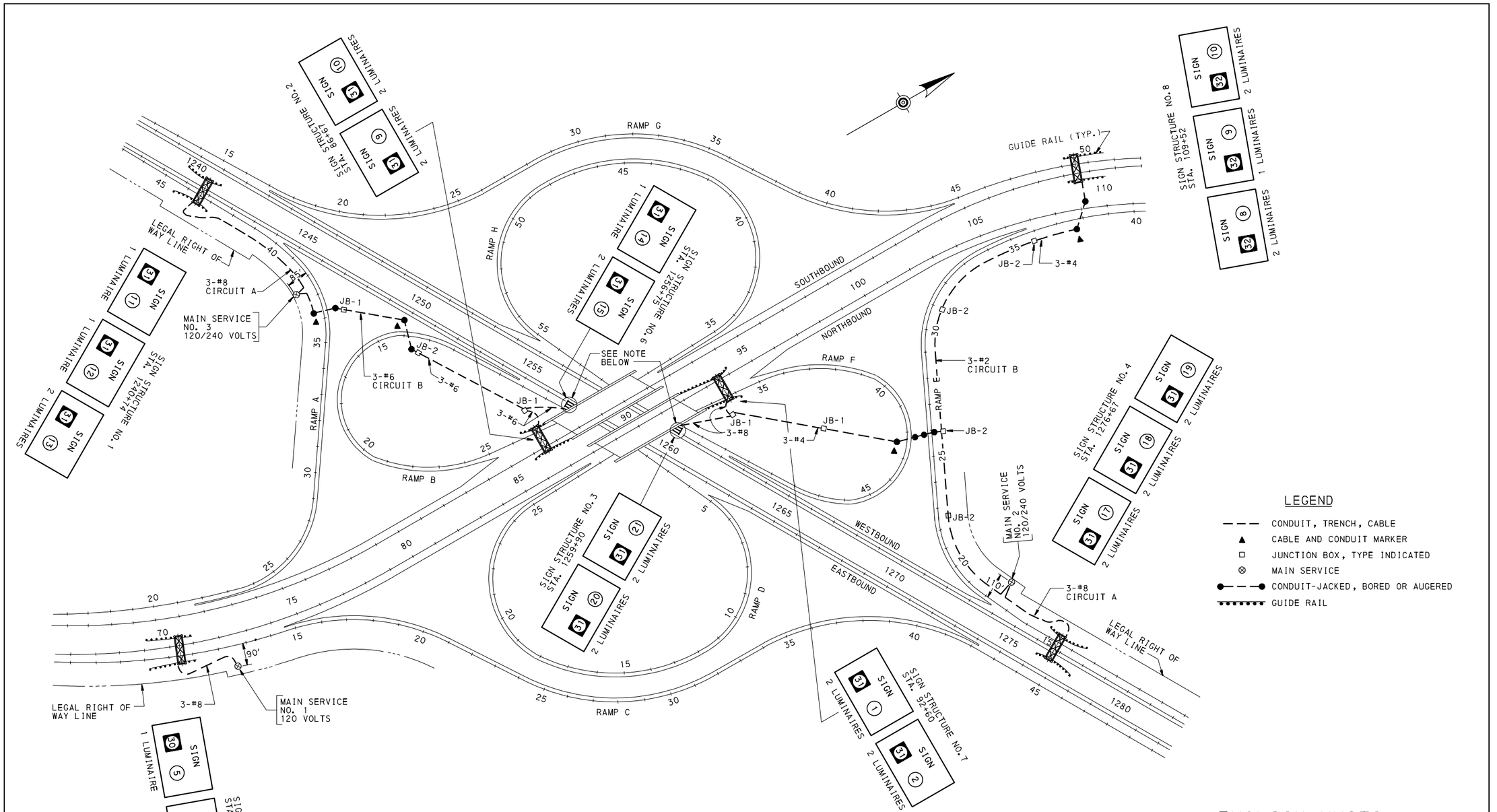

NOTE - BRIDGE MOUNTED SIGNS:

TRENCH FROM JUNCTION BOX DOWN EMBANKMENT TO PIER MOUNTED ENCLOSURE SEE SHEET 2 OF 5, TC-8715.

GENERAL NOTES:

1. QUANTITIES SHOWN ARE FOR ESTIMATING PURPOSE ONLY.
2. COMPLY WITH STANDARD SPECIFICATIONS PUBLICATION 408, SECTIONS 920 & 1102 APPLICABLE TO MATERIAL AND WORK ON THIS PROJECT, AND THE FOLLOWING STANDARD DRAWINGS:

   RC-81M HIGHWAY LIGHTING-JUNCTION BOXES-LIGHT DUTY
   RC-82M HIGHWAY LIGHTING-JUNCTION BOXES-HEAVY DUTY
   RC-84M HIGHWAY LIGHTING-LIGHTING AND ELECTRIC DETAILS
   TC-8715 SIGN LIGHTING

INFORMATION TO DESIGNER:

1. SHOW AS INFORMATION ONLY THE CONDUIT CROSSINGS ON THE ROADWAY PLANS.
2. MAIN SERVICE LOCATIONS MUST HAVE CONFIRMATION FROM LOCAL ELECTRIC UTILITY.
3. SUBMIT CONDUCTOR SIZE CALCULATIONS WITH PLANS FOR APPROVAL.
4. LOCATE MAIN SERVICE OUTSIDE CLEAR ZONE AS FAR FROM ROADWAY AS PRACTICAL.
5. SIGN LIGHTING MAY NOT BE REQUIRED ON ALL OVERHEAD SIGNS. SEE STANDARD DRAWING TC-8701A FOR EXCEPTIONS.
6. WHEN NOT INCLUDED IN OTHER CONTRACTS, PROVIDE FOR SEEDING AND MULCHING OF BACKFILLED TRENCH AND OTHER DISTURBED AREAS.

LEGEND

- CONDUIT, TRENCH, CABLE
- CABLE AND CONDUIT MARKER
- JUNCTION BOX, TYPE INDICATED
- MAIN SERVICE
- CONDUIT-JACKED, BORED OR AUGERED
- GUIDE RAIL

ENGLISH UNITS

COMMONWEALTH OF PENNSYLVANIA
DEPARTMENT OF TRANSPORTATION
BUREAU OF HIGHWAY SAFETY AND TRAFFIC ENGINEERING

SIGN LIGHTING PLAN (SAMPLE DRAWING)

RECOMMENDED MAY 25, 2007 Glenn C Rowe CHIEF, TRAFFIC ENGINEERING AND OPERATIONS DIVISION	RECOMMENDED MAY 25, 2007 M Patel CHIEF HIGHWAY ENGINEER	SHT. 4 OF 5 TC-8715

MAIN SERVICE NO. 1
120 V - 2 WIRE SUPPLY

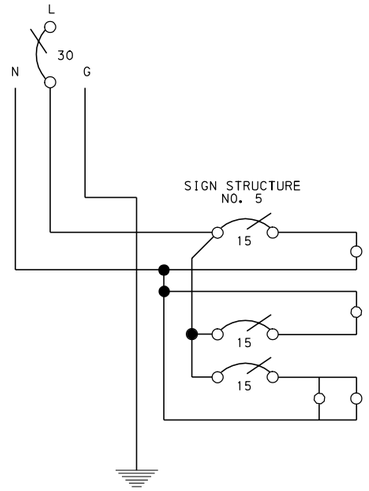

MAIN SERVICE NO. 2
120/240 V - 3 WIRE SUPPLY

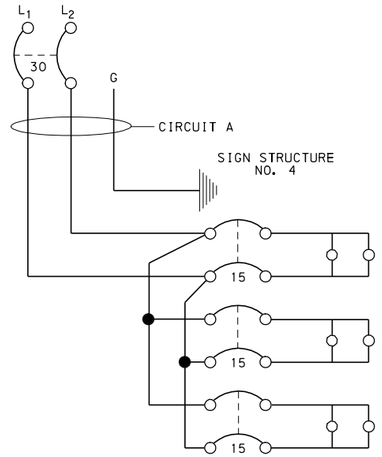

MAIN SERVICE NO. 2
120/240 V - 3 WIRE SUPPLY

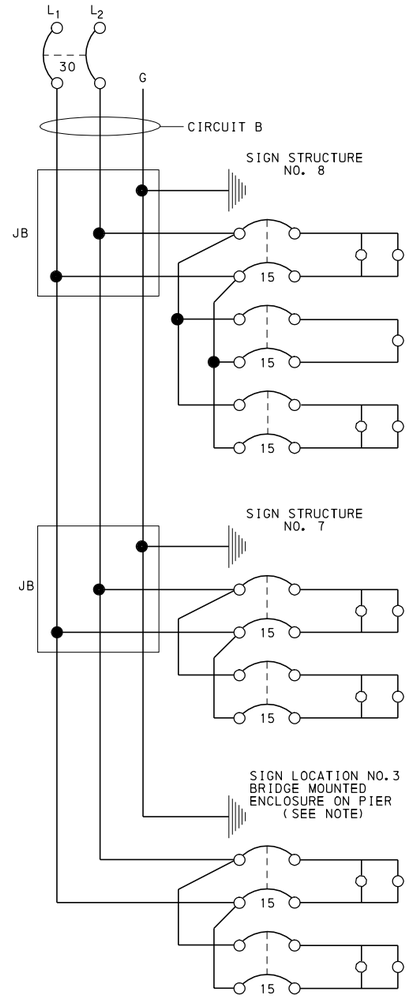

MAIN SERVICE NO. 3
120/240 V - 3 WIRE SUPPLY

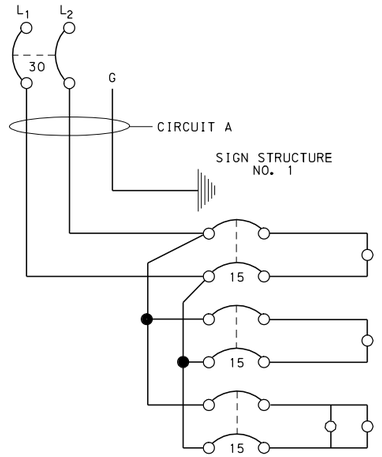

MAIN SERVICE NO. 3
120/240 V - 3 WIRE SUPPLY

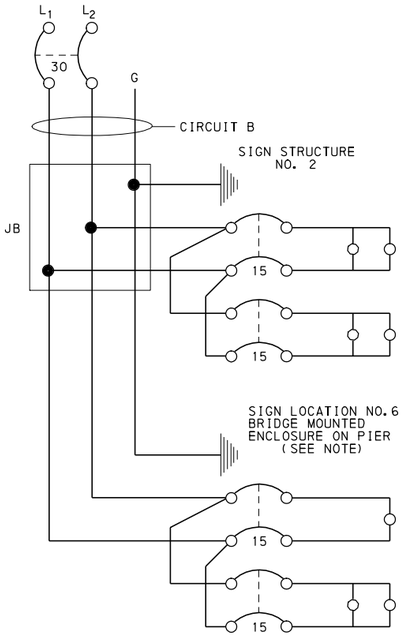

ESTIMATE OF REQUIRED QUANTITIES

MAIN SERVICE REQUIRED QUANTITIES	M. S. #1	M. S. #2	M. S. #3	TOTAL
SERVICE POLE	1	1	1	3
METER BASE (IF REQUIRED)	1	1	1	3
SERVICE DISCONNECT	1	1	1	3
ENCLOSURE	1	1	1	3
WEATHERHEAD & SERVICE CLOSURE	1	1	1	3
LIGHTNING ARRESTER	1	1	1	3
PHOTOELECTRIC CELL	1	1	1	3
GROUND ROD	1	1	1	3
SELECTOR SWITCH	1	1	1	3
LIGHTING CONTACTOR, 2 POLES, 60 A	1	1	1	3
CIRCUIT BREAKER, 1 POLE, 60 A	1			1
CIRCUIT BREAKER, 2 POLES, 60 A		1	1	2
CIRCUIT BREAKER, 1 POLE, 15 A	1	1	1	3
CIRCUIT BREAKER, 1 POLE, 30 A	1			1
CIRCUIT BREAKER, 2 POLES, 30 A		2	2	4
CONDUIT, FITTINGS, MISC. HARDWARE	1	1	1	3

SIGN STRUCTURE REQUIRED QUANTITIES					
SIGN STRUCTURE	ENCLOSURE	GROUND ROD	15 A 1P, C.B.	15 A 2P, C.B.	175 W LUM.
1	1	1		3	4
2	1	1		2	4
3	1 *	1		2	4
4	1	1		3	6
5	1	1	3		4
6	1 *	1		2	3
7	1	1		2	4
8	1	1		3	5
TOTAL	8	8	3	17	34

* BRIDGE MOUNTED SIGNS - ENCLOSURE MOUNTED ON BRIDGE PIER. SEE SHEET 1 OF 5, TC-8715.

METRIC UNITS *

CIRCUIT REQUIRED QUANTITIES - ENTIRE		
ITEM	QUANTITY	REMARKS
33.6 mm² , UNDERGROUND CABLE, COPPER, 1 CONDUCTOR	510 m	
21.1 mm² , UNDERGROUND CABLE, COPPER, 1 CONDUCTOR	1320 m	
13.3 mm² , UNDERGROUND CABLE, COPPER, 1 CONDUCTOR	900 m	
8.38 mm², UNDERGROUND CABLE, COPPER, 1 CONDUCTOR	905 m	
5.26 mm², TYPE TC CABLE, COPPER, 2 CONDUCTOR	460 m	FROM S.S. ENCLOSURE TO LUMINAIRE
CABLE & CONDUIT MARKER	4 EACH	
53 mm ø DIRECT BURIAL CONDUIT	1150 m	
TRENCH	1150 m	
JUNCTION BOX JB-1	3 EACH	
JUNCTION BOX JB-12	6 EACH	

ENGLISH UNITS *

CIRCUIT REQUIRED QUANTITIES - ENTIRE		
ITEM	QUANTITY	REMARKS
AWG 2, UNDERGROUND CABLE, COPPER, 1 CONDUCTOR	2190 FT.	
AWG 4, UNDERGROUND CABLE, COPPER, 1 CONDUCTOR	6588 FT.	
AWG 6, UNDERGROUND CABLE, COPPER, 1 CONDUCTOR	4350 FT.	
AWG 8, UNDERGROUND CABLE, COPPER, 1 CONDUCTOR	5090 FT.	
AWG 10, TYPE TC CABLE, COPPER, 2 CONDUCTOR	1500 FT.	FROM S.S. ENCLOSURE TO LUMINAIRE
CABLE & CONDUIT MARKER	4 EACH	
2" ø DIRECT BURIAL CONDUIT	5730 FT.	
TRENCH	5730 FT.	
JUNCTION BOX JB-1	3 EACH	
JUNCTION BOX JB-12	6 EACH	

* EITHER ALL METRIC OR ALL ENGLISH UNITS MUST BE USED ON PLANS. METRIC AND ENGLISH UNITS SHOWN MAY NOT BE MIXED.

NOTE:

IT MAY BE MORE DESIRABLE TO USE ONE COMMON ENCLOSURE ON NEARBY SIGN STRUCTURE COLUMN FOR BOTH THE STRUCTURE SIGN AND THE BRIDGE-MOUNTED SIGN IN LIEU OF A SEPARATE ENCLOSURE MOUNTED ON THE BRIDGE PIER AS SHOWN ON SHEET 1 OF 5, TC-8715. IF THIS OPTION IS DESIRED, IT MUST BE CLEARLY SPECIFIED ON THIS SHEET. IN THE SAMPLE, ENCLOSURES FOR SIGN LOCATIONS 3 AND 6 WOULD NOT BE SPECIFIED AND A NOTE EXPLAINING THE OMISSION WOULD BE NECESSARY.

COMMONWEALTH OF PENNSYLVANIA
DEPARTMENT OF TRANSPORTATION
BUREAU OF HIGHWAY SAFETY AND TRAFFIC ENGINEERING

SIGN LIGHTING
(SAMPLE DRAWING)

RECOMMENDED MAY 25, 2007
Glen C Rowe
CHIEF, TRAFFIC ENGINEERING AND OPERATIONS DIVISION

RECOMMENDED MAY 25, 2007
CHIEF HIGHWAY ENGINEER

SHT. 5 OF 5

TC-8715

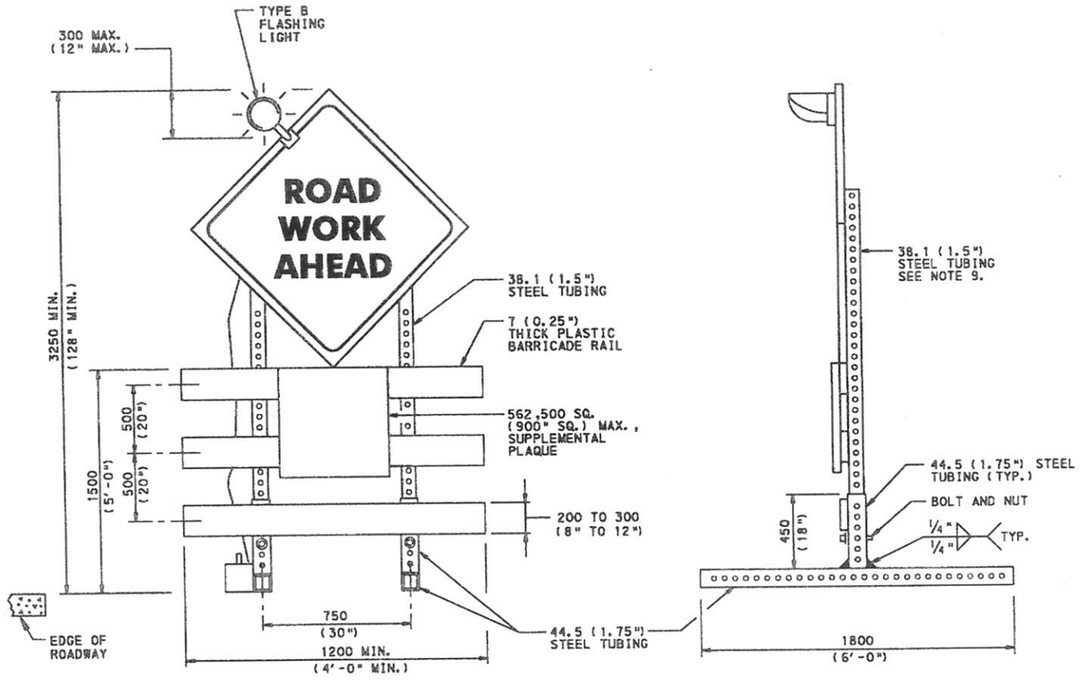

SKID-MOUNTED METAL SIGN SUPPORT

NOTES:

1. PROVIDE SIGN MATERIALS MEETING THE REQUIREMENTS OF PUBLICATION 408, SECTION 1103.4.
2. DIAMOND, RECTANGULAR, OCTAGONAL AND TRIANGULAR SIGNS ARE PERMITTED. WHILE HAVING NO MAXIMUM AREA, THE MAXIMUM WEIGHT OF THE SIGN MAY NOT EXCEED 11.3 kg (25 lb).
3. MINIMUM MOUNTING HEIGHT TO TOP OF ALL SIGNS IS 3250 mm (128").
4. SUPPLEMENTAL PLAQUE IS TO BE MOUNTED AS SHOWN.
5. BATTERY CASE MUST BE PLACED EITHER ON THE GROUND OR ATTACHED 300 (12") MAXIMUM ABOVE THE GROUND TO THE POST OR BASE LEG.
6. SIGN SUBSTRATE MAY BE PLYWOOD, ALUMINUM, FLEXIBLE (ROLL-UP) ABS, ALUMINUM / PLASTIC LAMINATE, CORRUGATED POLYPROPOLYLENE OR POLYETHYLENE.
7. PLACE SANDBAG BALLAST OR EQUAL ON BASE AS INDICATED OR DIRECTED.
8. SIGNS AND RAILS ARE TO BE ATTACHED WITH BOLTS AND NUTS.
9. IF TURNED 90°, RETROREFLECTIVE SHEETING MUST BE PLACED ON THE SIDES SO THAT THE BARRICADE IS CLEARLY VISIBLY TO APPROACHING DRIVERS.
10. MAXIMUM OF TWO TYPE B WARNING LIGHTS ON ALL SIGNS ARE ALLOWED WITH 600 (24") SEPARATING LIGHTS ON ROAD CLOSED SIGNS.
11. ALL DIMENSIONS ARE IN MILLIMETERS UNLESS OTHERWISE NOTED. ENGLISH UNITS SHOWN IN PARENTHESIS ( ).
12. EITHER ALL METRIC OR ALL ENGLISH UNITS MUST BE USED ON PLANS. METRIC AND ENGLISH UNITS SHOWN MAY NOT BE MIXED.

COMMONWEALTH OF PENNSYLVANIA
DEPARTMENT OF TRANSPORTATION
BUREAU OF HIGHWAY SAFETY AND TRAFFIC ENGINEERING

TRAFFIC CONTROL SIGNING TYPE III BARRICADE

RECOMMENDED JUL. 18, 2008	RECOMMENDED JUL. 18, 2008	SHT. 1 OF 1
CHIEF, TRAFFIC ENGINEERING AND OPERATIONS DIVISION	ACTING DIR. BUR. OF HIGHWAY SAFETY AND TRAFFIC ENGINEERING	TC-8716

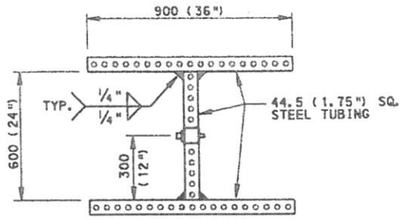

PLAN

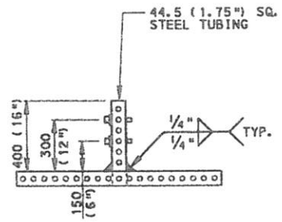

ELEVATION

"H" BASE DETAIL

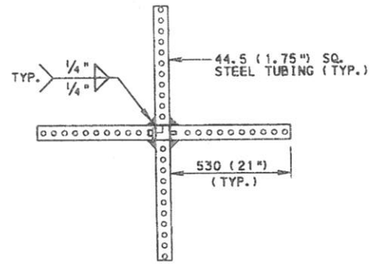

PLAN

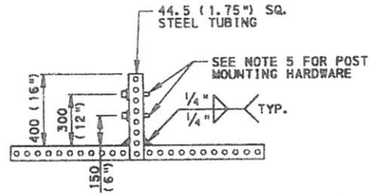

ELEVATION

"X" BASE DETAIL

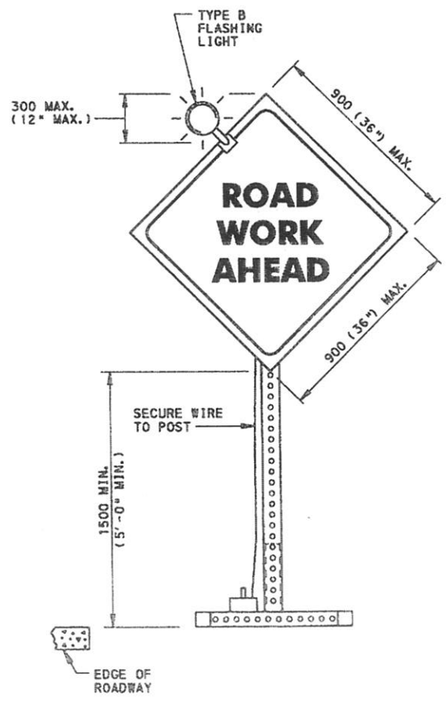

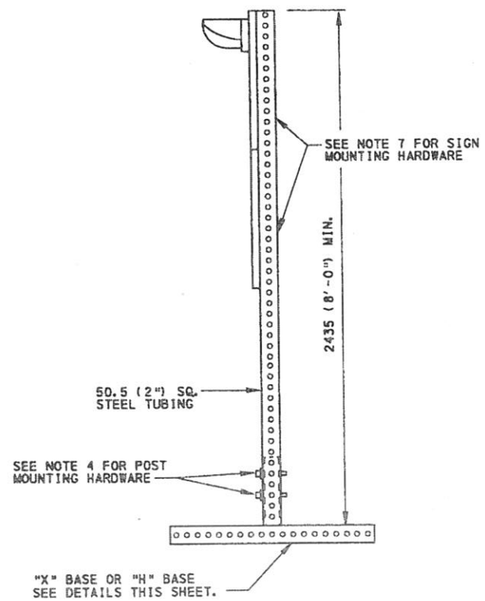

NOTES:

1. PROVIDE SIGN MATERIALS MEETING THE REQUIREMENTS OF PUBLICATION 408, SECTION 1103.4.
2. DIAMOND, RECTANGULAR, OCTAGONAL AND TRIANGULAR SIGNS ARE PERMITTED. THE MAXIMUM SIGN AREA SHALL NOT EXCEED 0.81sq. m (9 sq. ft.)
3. BATTERY CASE MUST BE PLACED EITHER ON THE GROUND OR ATTACHED 300 (12") MAXIMUM ABOVE THE GROUND TO THE POST OR BASE LEG.
4. SIGN SUBSTRATE MAY BE PLYWOOD, ALUMINUM, ALUMINUM / PLASTIC LAMINATE, CORRUGATED POLYPROPOLYLENE OR POLYETHYLENE, MAX. WEIGHT 6.8 kgs (15 lbs).
5. POST, 50.5 (2") STEEL TUBING SLIDES OVER BASE STUB, 44.5 (1.75") STEEL TUBING FASTENED WITH 8 (5/16") DIAMETER 57 (2 1/4") LONG STAINLESS STEEL OR GRADE 5 ZINC PLATED BOLTS AND NYLON INSERT LOCK NUTS. USE 9.5 (3/8") STEEL AND NYLON WASHERS UNDER BOTH THE BOLT AND NUT.
6. PLACE SANDBAG BALLAST OR EQUAL ON BASE AS INDICATED OR DIRECTED.
7. SIGN PANEL IS PLACED ON THE VERTICAL SIGN POST WITH TOP EDGE ALIGNED WITH POST TOP END AND FASTENED WITH 8 (5/16") DIAMETER 57 (2 1/4") LONG NYLON 6/6 FULLY THREADED HEX HEADED BOLTS AND NYLON INSERT LOCK NUTS. USE 9.5 (3/8") STEEL AND NYLON WASHERS UNDER BOTH THE BOLT AND NUT.
8. MAXIMUM OF TWO TYPE B WARNING LIGHTS ON ALL SIGNS ARE ALLOWED WITH 600 (24") SEPARATING LIGHTS ON ROAD CLOSED SIGNS.
9. ALL DIMENSIONS ARE IN MILLIMETERS UNLESS OTHERWISE NOTED. ENGLISH UNITS SHOWN IN PARENTHESIS ( ).
10. NCHRP 350 TEST LEVEL 3 CRASH TESTED AND APPROVED.
11. EITHER ALL METRIC OR ALL ENGLISH UNITS MUST BE USED ON PLANS. METRIC AND ENGLISH UNITS SHOWN MAY NOT BE MIXED.

COMMONWEALTH OF PENNSYLVANIA
DEPARTMENT OF TRANSPORTATION
BUREAU OF HIGHWAY SAFETY AND TRAFFIC ENGINEERING

TEMPORARY PORTABLE SIGN POST

"H" BASE AND "X" BASE

RECOMMENDED JUL. 18, 2008	RECOMMENDED JUL. 18, 2008	SHT. 1 OF 1
CHIEF, TRAFFIC ENGINEERING AND OPERATIONS DIVISION	ACTING DIR. BUR. OF HIGHWAY SAFETY AND TRAFFIC ENGINEERING	TC-8717