PENNSYLVANIA STATE FIRE ACADEMY
TRENCH RESCUE TECHNICIAN SKILL STATIONS

Attention: All certification candidates are required to have an established and up to date user portal account in the PA State Fire Academy 's Acadis Learning Management System prior to participating in **ANY certification testing opportunity. Please log in to your Acadis portal account and update all personal information before submitting your certification application. (Access can be gained through the OSFC website – Training and Certification Portal).

Skill Stations

NFPA 1006 Trench Rescue Technician– Chapter 12 (2021 Edition)

Station A	Trench Shoring: Intersecting & Lift (2 Evaluators)	Mandatory Station
Station B	Trench Shoring: Intersecting & Deep, IC (1 Evaluator)	Mandatory Station
Station C	Trench Shoring: Intersecting & Deep, SO (1 Evaluator)	Mandatory Station
Station D	Trench Shoring: Deep Trench (>8') (2 Evaluators)	Mandatory Station

All skills in the Trench Rescue Technician Level Skills Menu are Mandatory. All skills in the Trench Rescue Technician level MUST be passed with 100% of tasks being checked "YES" Any task checks "NO" in a skill station is a failure of that skill.

HOWEVER, skills A and B are broken into " SECTIONS. " Candidates who are unsuccessful at completing a section of skill A or B will only have to retest on the section that they failed.

Candidates who are unsuccessful at three or more sections in Skill Station A, "Trench Shoring: Intersecting" or two or more in Skill Station B, "Trench Shoring: Deep Trench (>8')," will have to retest the entire skill station.

AT NO TIME will a candidate, evaluator, participant, facility staff, etc., approach any edge where a fall of more than three (3) feet is possible without being attached to a fall protection system or a travel restraint system, unless they are attached to the main line and belay line or a twin tensioned system. Failure to follow these instructions will be an automatic failure of the station.

Minimum PPE for Trench Rescue Testing:

- Helmet/hardhat with chinstrap
- ANSI/ASTM eye protection
- Gloves
- Safety toed footwear

Skills A, B, and C

Skills A, B, and C are all tested in association with each other. The rescue squad will be a group of eight individuals. Six of the team will act as Rescue Specialists. One will act as the IC, and one will act as the ISO. The Rescue Specialists will be graded on Skill A, where the IC will be graded on Skill B, and the ISO will be graded on Skill C. Each candidate will act as either the IC or the ISO during a portion of the skill scenario. The rotation is detailed in the "Evaluator Note" below.

Evaluator NOTE: Teams will be made up of 8 personnel. Each person MUST perform the duties of one of the Essential Job Positions (EJP) – Either the IC or the SO. At the start of the evolution, each team member will choose one card from a deck of cards. Candidates will be assigned their roles based on the card drawn. The evolution will be broken into five sections. (Section 1) Size-up & Hazard Control, (Section 2) Shoring Operations, (Section 3) Lifting an Object, and (Section 4) Victim Removal.

There will be a new draw of assignment cards at each section change. Those candidates who have acted as the IC and SO during any portion of the scenario will not be assigned as the IC or ISO for another rotation.

The card draws will occur at the following times:
Start of the evolution/Skill A Section 1 – "Size-Up & Hazard Control," -- One card will say "Incident Commander," one card will say "Safety Officer," one card will say "Air Monitoring," one card will say "Ventilation," two cards will say "Spoil Pile," and two cards will say "Ground Pads."

Start of Section 2 – "Shoring Operations" – One card will say "Incident Commander," one card will say "Safety Officer," two cards will say "Shoring Entry Team," two cards will say "Panel Set Team," and two cards will say "Logistics."

Start of Section 3 – "Lifting an Object" – Each member of the team will draw cards. One card will say "Incident Commander," one card will say "Safety Officer," two will say "Entry Team" – these candidates will enter the trench and prepare the object for lifting, and four cards will say "Rigging Team."

Start of Section 4 – "Victim Package & Removal" --. Again, each member of the team will draw cards. One card will say "Incident Commander," one card will say "Safety Officer," two will say "Victim Package & Removal" – these candidates will enter the trench and package the patient, and four cards will say "Rigging Team." This card draws and assignments will be for the rest of the scenario to include Section 4 – "Incident Termination."

PENNSYLVANIA STATE FIRE ACADEMY
TRENCH RESCUE TECHNICIAN SKILL STATIONS

STATION A – Trench Shoring: Intersecting & Lift		Reference NFPA 1006 (2021 Edition), Chapter 12 Mandatory Station: JPRs 12.3.1, 12.3.2, 12.3.3, 12.3.4, 12.3.5, 12.3.6, 12.3.7, 12.3.8, 12.3.9, 12.3.10, 12.3.11	
Test Site	**Test Date**	**Candidate #**	**Check the Test Type** **_____Initial _____Retest**

Evaluator Note: Station scenario will require the candidates to shore an intersecting trench and to lift an object to free and remove a victim from an intersecting trench <8'.

All skills in the Trench Rescue Technician Level Skills Menu are Mandatory. All skills in the Trench Rescue Technician level MUST be passed with 100% of tasks being checked "YES" Any task checks "NO" in a skill station is a failure of that skill.

HOWEVER, Skill Station A is broken into " SECTIONS. " Candidates who are unsuccessful at completing a section of Skill Station A will only have to retest on the section that they failed. Candidates who are unsuccessful at three or more sections in Skill Station A, will have to retest the entire skill station.

Directions: Given trench rescue equipment, atmospheric monitoring equipment, PPE, ladders, ground pads, supplemental sheeting, spot shoring, struts, lifting equipment, heavy equipment with an operator, trench panels, whaler system, a spinal immobilization device, and patient transfer device/litter, the candidates, working as a team, will manage identified hazards, develop and implement a shoring plan, support the release of a single victim from a component entrapment, will lift an object off of an entrapped victim, coordinate the use of heavy equipment as needed, release a single victim from trench component entrapment, remove a single victim from a shored and secure trench, and terminate the rescue incident, complete and submit a tactical worksheet so that the operation is safe and effectively facilitated a victim rescue from an intersecting trench.

- ***See above rotation comments for skills rotations for Skills A, B, and C***

Performance Outcome: Pass / Fail is determined by **ALL** tasks correctly performed.

No.	Tasks	Yes	No
	Section 1: Size-up & Hazard Control		
1	Identifies and controls the hazards and exposures that threaten the safety of the victim(s) and responders; establishes works zones		
2	Performs atmospheric monitoring continuously around and within the trench; initiates proper ventilation within the trench		
3	Positions ground pads around the trench; marks trip, fall, and collapse hazards		
4	Calculates "total L" force; controls and moves spoil piles as required		
5	Dons required PPE and respiratory equipment (if needed) prior to entry		
6	Completes operation in a safe and controlled manner		
	Section 2: Shoring Operations		
7	Establishes required workstations and staging areas		

Continued on Next Page

PENNSYLVANIA STATE FIRE ACADEMY
TRENCH RESCUE TECHNICIAN SKILL STATIONS

Continued from Previous Page

STATION A – Trench Shoring: Intersecting & Lift (Page 2)		**Reference NFPA 1006 (2021 Edition), Chapter 12 Mandatory Station: JPRs 12.3.1, 12.3.2, 12.3.3, 12.3.4, 12.3.5, 12.3.6, 12.3.7, 12.3.8, 12.3.9, 12.3.10, 12.3.11**	
Test Site	**Test Date**	**Candidate #**	**Check the Test Type** **_____Initial _____Retest**

8	Places and secures trench panels, struts, supplemental sheeting, spot shoring, and whalers within the trench		
9	Strut and inside wale spacing is appropriate for trench depth		
10	Rescuers stayed within the safe areas/zones during shoring operation (one (1) per panel set)		
11	Provides a minimum of two (2) ingress/egress points		
12	Completes operation in a safe and controlled manner		
Section 3: Lifting an Object			
13	Enters the trench, assesses the entrapped victim, and reports condition and mechanism of injuries to IC		
14	Selects and positions rescue equipment for lifting the object while recognizing hazards; utilizing radio and/or hand signals; assessing operator skill/demeanor		
15	Prevents object from falling or shifting during lifting and release operation		
16	Coordinate an object lift enough to free the victim		
17	Provides resources to the rescue team to support victim removal		
18	Completes operation in a safe and controlled manner		
Section 4: Victim Removal			
19	Locates victim; communicates victim location to IC		
20	Removes soil carefully and cautiously from the victim, while treating for signs of compartment syndrome		
21	Briefs rescue team and implements rescue plan		
22	Provides resources to the rescue team to support victim removal		
23	Completes operation in a safe and controlled manner		
Section 5: Termination			
24	Safely completes incident termination and participates in debriefing; confirms PAR		
	Please indicate skill outcome	**PASS**	**FAIL**

Evaluator Comments: _____

_____

_____

_____

Evaluator Signature: _____ **Evaluator #**_____

PENNSYLVANIA STATE FIRE ACADEMY
TRENCH RESCUE TECHNICIAN SKILL STATIONS

STATION B – Intersecting Trench or Deep Trench Shoring, Incident Commander		Reference NFPA 1006 (2021 Edition), Chapter 12 Mandatory Station: JPRs 12.3.1, 12.3.2, 12.3.3, 12.3.4, 12.3.5, 12.3.6, 12.3.7, 12.3.8	
Test Site	**Test Date**	**Candidate #**	**Check the Test Type** **_____Initial _____Retest**

Evaluator Note: Station scenario will require the candidates to shore an intersecting trench and to lift an object to free and remove a victim from an intersecting trench <8'. OR Station scenario will require the candidates to develop and implement a plan to shore a trench greater than eight (8) feet in depth.

All skills in the Trench Rescue Technician Level Skills Menu are Mandatory. All skills in the Trench Rescue Technician level MUST be passed with 100% of tasks being checked "YES" Any task checks "NO" in a skill station is a failure of that skill.

Directions for Intersecting Trench: Given trench rescue equipment, atmospheric monitoring equipment, PPE, ladders, ground pads, supplemental sheeting, spot shoring, struts, lifting equipment, heavy equipment with an operator, trench panels, whaler system, a spinal immobilization device, and patient transfer device/litter, the candidates, working as a team, will manage identified hazards, develop and implement a shoring plan, support the release of a single victim from a component entrapment, will lift an object off of an entrapped victim, coordinate the use of heavy equipment as needed, release a single victim from trench component entrapment, remove a single victim from a shored and secure trench, and terminate the rescue incident, complete and submit a tactical worksheet so that the operation is safe and effectively facilitated a victim rescue from an intersecting trench.

OR

Direction for Deep Trench <8': Given trench rescue equipment, atmospheric monitoring equipment, PPE, ladders, ground pads, supplemental sheeting, spot shoring, struts, whalers, trench panels, a spinal immobilization device, and patient transfer device/litter, the candidates, working as a team, will manage identified hazards, develop and implement a shoring plan, release a single victim from soil entrapment, remove a single victim from a shored and secure trench, and terminate the rescue incident, complete and submit on scene a "MUSAR" tactical worksheet so that a victim is assessed, packaged, and safely removed from a non-intersecting trench (>8').

Performance Outcome: Pass / Fail is determined by **ALL** correctly performed.

No.	Tasks	Yes	No
1	Gathers relevant information from on-scene competent person		
2	Identifies the number of victims, victim condition, and victim location(s)		
3	Establishes required workstations and staging areas within the proper work zone		
4	Identifies mechanism of entrapment		
5	Develop shoring plan		
6	Ensures that shoring system is in place and secure prior to entry		
7	Ensures that atmospheric monitoring around and inside the trench area is on-going; ensures ventilation is in place		
8	Selects and utilizes PPE and respiratory protection as required		
9	Conducts briefing prior to initiating rescue plan; Briefs rescue team; implements a rescue plan		

Continued on Next Page

PENNSYLVANIA STATE FIRE ACADEMY
TRENCH RESCUE TECHNICIAN SKILL STATIONS

Continued from Previous Page

STATION B – Intersecting Trench or Deep Trench Shoring, Incident Commander (Page 2)		**Reference NFPA 1006 (2021 Edition), Chapter 12 Mandatory Station: JPRs 12.3.1, 12.3.2, 12.3.3, 12.3.4, 12.3.5, 12.3.6, 12.3.7, 12.3.8**	
Test Site	**Test Date**	**Candidate #**	**Check the Test Type** _____**Initial** _____**Retest**

10	Complete the tactical worksheet		
11	Completes an incident size-up		
12	Conducts incident briefing; identifies hazards; communicates shoring plan		
13	Calculates "total L" force; controls and has the spoil pile(s) moved as required		
14	Identifies and controls the hazards and exposures that threaten the safety of the victim(s) and responders; establishes works zones		
15	Provides resources to the rescue team to support operations		
16	Terminates incident; conducts debriefing; confirms PAR		
17	Completes operation in a safe and controlled manner		
	Please indicate skill outcome	**PASS**	**FAIL**

Evaluator Comments: _____

_____

_____

_____

_____

Evaluator Signature: _____ **Evaluator #**_____

PENNSYLVANIA STATE FIRE ACADEMY
TRENCH RESCUE TECHNICIAN SKILL STATIONS

STATION C – Intersecting Trench or Deep Trench Shoring, Safety Officer		Reference NFPA 1006 (2021 Edition), Chapter 12 Mandatory Station: JPRs 12.3.1, 12.3.2, 12.3.3, 12.3.4, 12.3.5, 12.3.6, 12.3.7, 12.3.8, 12.3.9, 12.3.10, 12.3.11	
Test Site	**Test Date**	**Candidate #**	**Check the Test Type** **_____Initial _____Retest**

Evaluator Note: Station scenario will require the candidates to shore an intersecting trench and to lift an object to free and remove a victim from an intersecting trench <8'. OR Station scenario will require the candidates to develop and implement a plan to shore a trench greater than eight (8) feet in depth.

All skills in the Trench Rescue Technician Level Skills Menu are Mandatory. All skills in the Trench Rescue Technician level MUST be passed with 100% of tasks being checked "YES" Any task checks "NO" in a skill station is a failure of that skill.

Directions for Intersecting Trench: Given trench rescue equipment, atmospheric monitoring equipment, PPE, ladders, ground pads, supplemental sheeting, spot shoring, struts, lifting equipment, heavy equipment with an operator, trench panels, whaler system, a spinal immobilization device, and patient transfer device/litter, the candidates, working as a team, will manage identified hazards, develop and implement a shoring plan, support the release of a single victim from a component entrapment, will lift an object off of an entrapped victim, coordinate the use of heavy equipment as needed, release a single victim from trench component entrapment, remove a single victim from a shored and secure trench, and terminate the rescue incident, complete and submit a tactical worksheet so that the operation is safe and effectively facilitated a victim rescue from an intersecting trench.

OR

Direction for Deep Trench <8': Given trench rescue equipment, atmospheric monitoring equipment, PPE, ladders, ground pads, supplemental sheeting, spot shoring, struts, whalers, trench panels, a spinal immobilization device, and patient transfer device/litter, the candidates, working as a team, will manage identified hazards, develop and implement a shoring plan, release a single victim from soil entrapment, remove a single victim from a shored and secure trench, and terminate the rescue incident, complete and submit on scene a "MUSAR" tactical worksheet so that a victim is assessed, packaged, and safely removed from a non-intersecting trench (>8').

Performance Outcome: Pass / Fail is determined by **ALL** tasks correctly performed.

No.	Tasks	Yes	No
1	Identifies and documents the hazards and exposures that threaten the safety of the victim(s) and responders; establishes works zones		
2	Develops and implements site safety plan as part of Incident Command Staff, utilizing all worksheets, tabulated data, and other resources.		
3	Receives and documents atmospheric monitoring conditions continuously around and within the trench; initiates proper ventilation within the trench		
4	Develop plans for pending changes to the scene caused by weather or daylight		
5	Provide safety briefing to entire team		
6	In conjunction with IC, Calculates "total L" force; controls and directs movement of spoil piles as required		

Continued Next Page

PENNSYLVANIA STATE FIRE ACADEMY
TRENCH RESCUE TECHNICIAN SKILL STATIONS

Continued from Previous Page

STATION C – Intersecting Trench or Deep Trench Shoring, Safety Officer (Page 2)		**Reference NFPA 1006 (2021 Edition), Chapter 12 Mandatory Station: JPRs 12.3.1, 12.3.2, 12.3.3, 12.3.4, 12.3.5, 12.3.6, 12.3.7, 12.3.8, 12.3.9, 12.3.10, 12.3.11**	
Test Site	**Test Date**	**Candidate #**	**Check the Test Type** **_____Initial _____Retest**

7	Identifies required PPE and respiratory equipment (if needed) for all personnel		
8	Monitors or assigns monitors for ingress and egress, and keeps PAR of personnel		
9	Monitors, makes corrections or ALL STOPS, all aspects of safety, including support operations, such as Ventilation, Dewatering, Cut Station, Lifting, Lowering, EMS and any Specialized Equipment Operations,		
10	Monitor patient condition, with consideration to elapsed time since event and compartment syndrome related to crush injury		
11	Terminates incident; conducts debriefing; confirms PAR		
12	Completes operation in a safe and controlled manner		
	Please indicate skill outcome	**PASS**	**FAIL**

Evaluator Comments: _____

_____

_____

_____

_____

Evaluator Signature: _____ **Evaluator #**_____

PENNSYLVANIA STATE FIRE ACADEMY
TRENCH RESCUE TECHNICIAN SKILL STATIONS

STATION D – Deep Trench Shoring (>8')		Reference NFPA 1006 (2021 Edition), Chapter 12 Mandatory Station: JPRs 12.3.3, 12.3.4, 12.3.6, 12.3.7, 12.3.8	
Test Site	**Test Date**	**Candidate #**	**Check the Test Type** **_____Initial _____Retest**

Evaluator Note: Station scenario will require the candidates to develop and implement a plan to shore a trench greater than eight (8) feet in depth.

All skills in the Trench Rescue Technician Level Skills Menu are Mandatory. All skills in the Trench Rescue Technician level MUST be passed with 100% of tasks being checked "YES" Any task checks "NO" in a skill station is a failure of that skill.

HOWEVER, Skill Station D is broken into " SECTIONS. " Candidates who are unsuccessful at completing a section of Skill Station D will only have to retest on the section that they failed. Candidates who are unsuccessful at two or more in Skill Station D, "Trench Shoring: Deep Trench (>8')," will have to retest the entire skill station.

Directions: Given trench rescue equipment, atmospheric monitoring equipment, PPE, ladders, ground pads, supplemental sheeting, spot shoring, struts, whalers, trench panels, a spinal immobilization device, and patient transfer device/litter, the candidates, working as a team, will manage identified hazards, develop and implement a shoring plan, release a single victim from soil entrapment, remove a single victim from a shored and secure trench, and terminate the rescue incident, complete and submit on scene a "MUSAR" tactical worksheet so that a victim is assessed, packaged, and safely removed from a non-intersecting trench (>8').

- ***Candidates will draw cards for position assignments. Positions for Skill D are***
  - ***Incident Commander***
  - ***Safety Officer***
  - ***Rescue Team Member***
- ***Team members will remain in their assigned positions for the entire scenario.***

Performance Outcome: Pass / Fail is determined by **ALL** tasks correctly performed.

No.	Tasks	Yes	No
	Section 1: Hazard Control		
1	Completes incident size-up		
2	Identifies and controls the hazards and exposures that threaten the safety of the victim(s) and responders; establishes works zones		
3	Performs atmospheric monitoring continuously around and within the trench; initiates proper ventilation within the trench		
4	Positions ground pads around the trench; marks trip, fall, and collapse hazards		
5	Calculates "total L" force; controls and moves spoil piles as required		
6	Completes operation in a safe and controlled manner		
	Section 2: Shoring Operations		
7	Establishes required workstations and staging areas		

Continued on Next Page

PENNSYLVANIA STATE FIRE ACADEMY
TRENCH RESCUE TECHNICIAN SKILL STATIONS

Continued from Previous Page

STATION D – Deep Trench Shoring (>8') (Page 2)		**Reference NFPA 1006 (2021 Edition), Chapter 12 Mandatory Station: JPRs 12.3.3, 12.3.4, 12.3.6, 12.3.7, 12.3.8**	
Test Site	**Test Date**	**Candidate #**	**Check the Test Type** **_____Initial _____Retest**

8	Places and secures trench panels, supplemental sheeting and or spot shoring within the trench, to support >8' depth		
9	Strut and wale size, spacing, and positioning is appropriate for trench depth and width		
10	Rescuers stayed within the safe areas/zones during shoring operation (one (1) per panel set)		
11	Provides a minimum of two (2) ingress/egress points		
12	Shoring operation supports a victim rescue from a deep trench >8' depth		
13	Completes operation in a safe and controlled manner		
	Please indicate skill outcome	**PASS**	**FAIL**

Evaluator Comments: _____

_____

_____

_____

_____

_____

_____

Evaluator Signature: _____ **Evaluator #**_____

Trench Rescue Tactical Worksheet

INITIAL ON-SCENE OPERATIONS

APPROACH FROM HEAD OF TRENCH ☐ Ladders ☐ Edge Protection ☐ Clear Spoil (2' Back) ☐ Assign Safety Officer

Date _____ Start Time _____ Incident # _____

Number of Victims _____ Time Last Seen _____ Shut Down All Equipment/Evaluate Workers _____

Purpose of Trench _____ Depth of Trench _____

Site Location _____

Victim Location _____ Victim Marking _____ Victim Protection _____ Victim Condition _____

TRENCH HAZARDS

☐ Spoil-In ☐ Shear-In ☐ Slough-In ☐ Lip-In ☐ Shoring Failure ☐ Other _____

☐ Water ☐ Vibration ☐ Soil Conditions ☐ Hazmat ☐ Utilities ☐ USA Markings

☐ **Atmospheric Monitoring:** % O_2 _____ % LEL _____ CO _____ H_2S _____

PRE-ENTRY OPERATIONS

☐ **Pre-Entry Briefing** ☐ **Fall Protection** ☐ **PPE** ☐ **Clear Spoil** ☐ **LOTO**

Edge Protection: ☐ Planks (2" x 12") ☐ Plywood ☐ OSB ☐ **Other** _____

☐ **Ladders** ☐ Monitoring ☐ Ventilation ☐ Lighting ☐ Bridges ☐ Perimeter

PROTECTIVE SYSTEMS

☐ Trench Data Worksheets ☐ Panels ☐ Struts ☐ Walers ☐ Hogsheads ☐ Supplemental Sheeting and Shoring ☐ 2-4-2

Shoring Type: ☐ Timber ☐ Pipe/Post Screw ☐ Pneumatic ☐ Hydrualic ☐ Box/Shield

VICTIM RESCUE AND RECOVERY

Soil Removal: ☐ Shovels ☐ Buckets ☐ Air Knife ☐ Vacuum Truck ☐ Other _____

Victim Packaging: ☐ Backboard ☐ Rescue Litter ☐ LSP Half-Back ☐ Spec Pak ☐ Wristlets ☐ SKED ☐ Victim Harness
☐ Hasty Chest Harness ☐ Other _____

Victim Extrication: ☐ Ladder Slide ☐ Moving Ladder Slide ☐ High Point Anchor

SCENE MANAGEMENT

Incident Commander _____

Operations _____

Rescue Group Supervisor _____

Site Safety Officer _____

Cutting Station _____

Rescue Squad 1 Leader _____ Rescue Squad 2 Leader _____

Rescue Squad 3 Leader _____ Rescue Squad 4 Leader _____

Logistics _____

Medical Group _____

Industry or Contractor's Name _____

Company Address _____ City/State _____

Phone _____ Reporting Party/Contact Person _____

Trench Rescue Tactical Worksheet

INCIDENT TERMINATION

☐ Personnel Accountability ☐ Equipment Removed ☐ Scene Secured ☐ Debriefing ☐ OSHA Contacted

Time_____ Date_____ Rescue Group Supervisor Signature _____

MONITOR LOG

TIME	LEVEL	%O_2	%LEL	CO	H_2S

Monitoring Officer _____

SCENE DIAGRAM/NOTES

Rescue Group Supervisor Signature:_____

Incident Command Organizational Chart

INCIDENT: _____ DATE: _____ LOCATION: _____

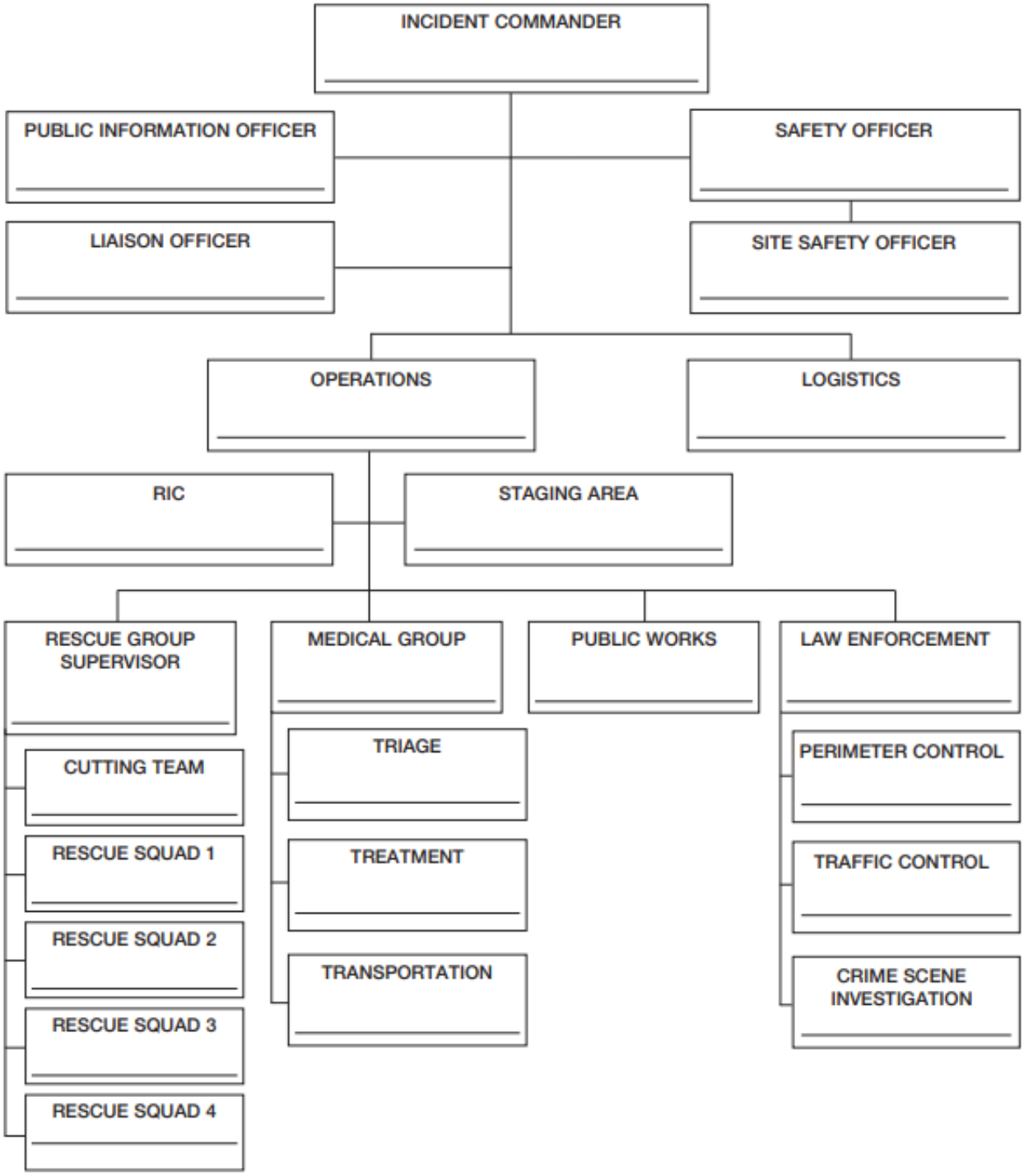

Trench Scenario Critique Worksheet

Type of trench _____

Rescue group supervisor _____

RESPONSIBLE PARTY:

What type of work? _____

What happened? _____

How many workers? _____

How long buried? _____

Where buried? _____

How deep? _____

Hazards? _____

Resources at site? _____

☐ Size-up: six sided

☐ Approach: Trench End/Head

☐ Trench/Soil Conditions

_____

_____

PRE-ENTRY OPERATIONS:

☐ Pre-entry briefing

☐ Monitor

☐ Ventilation

☐ Mark/protect victim

☐ Mark/secure Hazards

☐ Ladders: time _____

☐ Clear spoil: time _____

☐ Edge protection: time _____

☐ Assign safety officer: time _____

TRENCH OPERATIONS:

☐ Assign rescue squads

☐ Shoring system plan:
- ☐ Placement
- ☐ All squads notified
- ☐ Good teamwork

☐ Arriving Units:
- ☐ Hazard communication
- ☐ Assignments

☐ Logistics:
- ☐ Resources
- ☐ Cutting station

SHORING SYSTEM CONSTRUCTON:

☐ Standard systems: 2-4-2

☐ Waler systems

☐ End shore systems

☐ Supplemental sheeting/shoring

☐ Positive connections/nailing

☐ Backfill:
- ☐ Wedges/cribbing
- ☐ Air cushions
- ☐ Sandbags
- ☐ Salvage cover/spoil

VICTIM RECOVERY:

☐ Soil removal

☐ Victim packaging

☐ Victim extrication

☐ Victim #1: time out _____

☐ Victim #2: time out _____

Time completed _____

SHORING NOTES

These shoring systems contained herein provide a minimum factor of safety of 2 to 1. These rescue shoring systems and charts are conditional upon the following soil and shoring system conditions:

1. Water level that is below the bottom of the trench
2. The bottom of the excavation is not "boiling"
3. The soil is not oversaturated and/or flowing
4. Surcharged loads (spoil piles and equipment) that are within the Simple L area must be added to the Total L in accordance with the Surcharge chart.
5. Tight sheeting selected from the shoring panel chart
6. Struts must be placed within 10 degrees of level and 10 degrees of perpendicular (horizontal) to the trench walls except when shoring angled walls.
7. Use swivel bases on both ends of Paratech struts secured with (2) 16d nails in each foot
8. Do not use for trench widths greater than indicated in the chart
9. 80% of panel in contact with trench wall and or backfill this does not apply to panels that utilize back shoring or buttresses
10. Do not place any vertical loads on struts or wales (do not hang items from them, stand on them, climb them or cross shore to them)
11. Horizontal shoring distances should exceed the depth of the trench.
12. This shoring chart is not designed for soil that will not stand up long enough to install shoring
13. Struts must be within 1 foot minimum and 2 feet maximum (below) the trench lip and within 1 foot minimum and 2 feet maximum (above) the trench floor.
14. Maximum vertical strut spacing is 4 feet.
15. Horizontal strut spacing is 4 feet.
16. After placement, warning signs to be aware of:
    a. Cracking and popping of the wood panels after installation is a sign of increasing loads
    b. The strong back will break before the panel breaks
    c. If a strong back begins to break, evacuate the trench.
    From outside of the trench add a strut at the break location and monitor the panels closely for signs of increasing load (increasing deflection) or instability
    d. The interface between the strut feet and strong back most be monitored for excessive crushing of the wood
    e. If the panel deflection exceeds 1" between struts
    evacuate the trench and add an intermediate strut. Monitor panels to assure the deflection has stopped before reentering.
    f. Monitor the lip of the trench for widening or growing cracks and fissures.

2

ESTIMATING LATERAL SOIL FORCES

LATERAL FORCE- For rescue situations (trench collapse) with trench walls that can be shored with panels and struts an accurate estimation of the lateral force on the shoring by using the following (T-L) method.

ESTIMATING LATERAL EARTH PRESSURE: The maximum lateral force on a 4ft x 4ft section of a shoring panel is a function of the distance from the original (pre-collapse) face of trench to the back of the farthest failure or to the farthest tension crack. That distance, measured in feet, is called the Simple L.

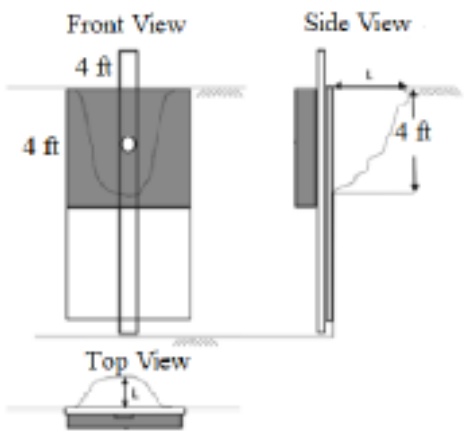

Definitions

Simple L (SL): The distance (length) measured in feet from the original trench wall perpendicular to the furthest point of soil failure or signs of failure (cracks/fissures).

Surcharged L (ScL): Surcharged loads (spoil piles/equipment), that are within the area that is between the original trench faces and the furthest point of soil failure (SL). Measured in feet perpendicular to the trench wall.

Total L (L): The Simple L (SL) plus the Surcharge L (ScL) if one exists.

3

A tape measure is used to find the distance (SL) from the original trench face (wall) to the farthest point of soil failure and to measure the amount of surcharge (ScL) within the affected area. Common failures include:

Open Lip Failure Closed Lip Failure Fissure

SURCHARGE CALCULATIONS FOR EARTH PRESSURES

SURCHARGED LOADS- Surcharged loads at a trench site usually include the spoil pile and/or construction equipment and materials. Construction equipment and materials can include but are not limited to excavators, dump trucks, trench boxes, pipes, and gravel.

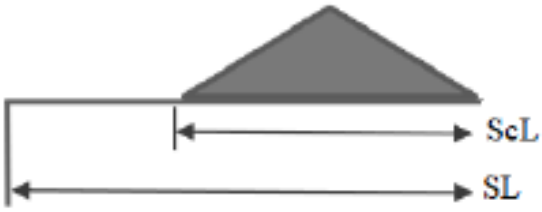

SPOIL PILE- Measure the amount of spoil (ScL) that is within the Simple L (SL). Round the measurement up to the next foot to determine the ScL.

EQUIPMENT- Measure the amount of equipment (ScL) that is within the simple L (SL). Round the measurement up to the next foot to determine the (ScL).

4

SURCHARGE CHART

SURCHARGE (ScL)- Feet within Simple L (SL)				
SPOIL	Add to SL		EQUIP.	Add to SL
1	1		1	1
2	1		2	2
3	1		3	3
4	2		4	5
5	3		5	8
6	4		6	11
7	5		7	N/A
8	7		8	N/A
9	9		9	N/A
10	10		10	N/A
Note: Total L (L)=Simple L (SL) plus Surcharge L (ScL)				
Charts are valid for Total L of 20 or less				

DEPTH CONVERSION CHART

DEPTH TO SIMPLE L (SL) CONVERSION GUIDE		
Trench Depth		SL Equivalent
4- 8 feet		SL-6
9 feet		SL-7
10 feet		SL-7
11 feet		SL-8
12 feet		SL-9
13 feet		SL-10
14 feet		SL-10
15 feet		SL-11
16 feet		SL-12
17 feet		SL-12
18 feet		SL-13
19 feet		SL-14
20 feet		SL-14
Note: Total L (L)=Simple L (SL) plus Surcharge L (ScL)		

In the unlikely event of a rescue in a trench that has not had a soil failure you need to measure the depth of the trench (measured in feet and rounded up) and use this chart to convert the depth to a Simple L.

5

OPERATIONS LEVEL

TRENCH RESCUE SHORING SYSTEMS

NON-ENTRY SHORING

This shoring system may be used to provide stabilization of trench wall to depths of 8ft. Non-entry shoring at the Operations Level, includes panels, wales, and back-fill techniques. For straight run trenches deeper than 8 feet see (Deep Trench Shoring)

Rescue Shoring must provide:

1) Primary Shoring- rapidly protect the victim
2) Secondary Shoring- create a Safe Zone for rescuers

1) Primary Shoring

Positioning strut Backfill strut Compliance strut

2) Secondary Shoring

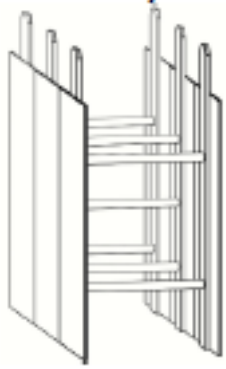

Panels and Struts

Panels. Struts and Wales

6

Tabulated Data for Trench Rescue Shoring

WALE with STRUT and PLYWOOD SYSTEM

TABULATED DATA FOR TRENCH RESCUE SHORING (Note 1)

OSHA TYPE C-60 (Note 3)

Max Depth (ft)	Upright	Maximum Vertical Strut Spacing (ft)	Maximum Horizontal Strut Spacing and Trench Width (ft) (Note 2)									Sheeting
			Strut Spacing (ft)		Allowable Trench Width (ft)			Strut Spacing (ft)	Allowable Trench Width (ft)			
			Wale Size		Strut			Wale Size	Strut			
			2 x 12	4x4	4x4	2x4+4x4	2-4x4	6x6	4x4	2x4+4x4	2-4x4	
6	2x12	4	5	6	8	9	11	10	5	6	8	3/4" CDX plywood
8	2x12	4	4	5	7	9	10	10	5	6	7	
10	2x12	4	3	4	7	9	10	9	5	6	7	
12	2x12	4	3	4	7	8	9	8	5	6	7	
14	2x12	4	3	4	6	7	9	7	0	5	6	
16	2x12	4	3	4	6	7	8	7	0	5	6	
18	2x12	3	3	4	6	7	9	7	0	5	6	
20	2x12	3	3	4	6	7	8	7	0	5	6	

OSHA TYPE C-80 (Note 4)

Max Depth (ft)	Upright	Maximum Vertical Strut Spacing (ft)	Maximum Horizontal Strut Spacing and Trench Width (ft) (Note 2)									Sheeting
			Strut Spacing (ft)		Allowable Trench Width (ft)			Strut Spacing (ft)	Allowable Trench Width (ft)			
			Wale Size		Strut			Wale Size	Strut			
			2 x 12	4x4	4x4	2x4+4x4	2-4x4	6x6	4x4	2x4+4x4	2-4x4	
6	2x12	4	3	4	8	9	11	7	5	6	7	3/4" CDX plywood
8	2x12	4	2.5	3	7	9	10	6	4	5	6	
10	2x12	4	2.5	3	7	9	10	6	4	5	6	
12	2x12	4	2	2.5	7	8	9	5	4	5	6	
14	2x12	4	2	2.5	6	7	9	5	0	4	5	
16	2x12	4	2	2.5	6	7	8	5	0	4	5	
18	2x12	3	2	2.5	6	7	9	5	0	5	5	
20	2x12	3	2	2.5	6	7	8	5	0	5	5	

highlited green = standard "2-4-2 system

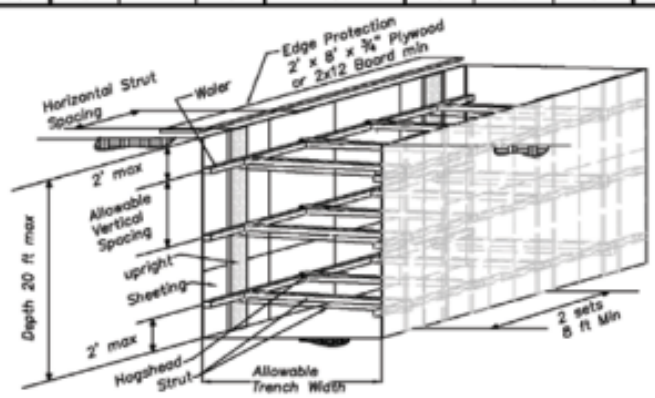

WALE with STRUT and PLYWOOD

REGISTERED PROFESSIONAL ENGINEER JOE TURNER No. 37334 CIVIL STATE OF CALIFORNIA

California State Fire Training
1131 S. Street
Sacramento, Ca. 95811

CER. Inc.
Construction Engineering Resource, Inc.
1837 Wright Street
Santa Rosa, Ca. 95404

Job #1373-2	10/1/2013
Drawn by: JT	Sheet 1 of 3

Provided by CMC Rescue, Inc.
Copies of this form can be downloaded at cmcrescue.com/forms.

Tabulated Data for Trench Rescue Shoring

WALE with STRUT and PLYWOOD SYSTEM

TABULATED DATA FOR TRENCH RESCUE SHORING

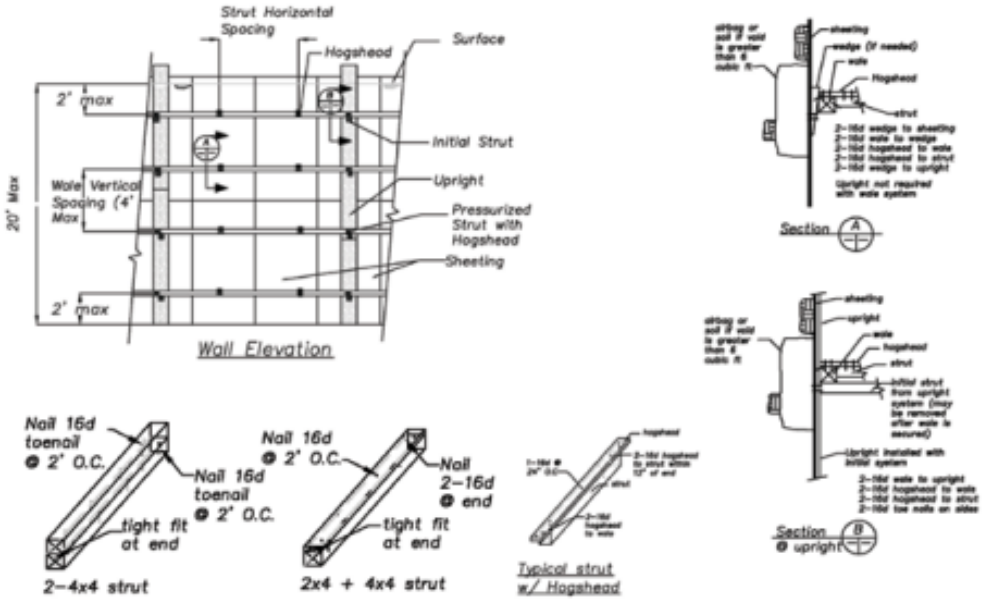

Framing Notes-

1) Use only 1 wedge set, do not stack them.

2) General rule for nailing strut connections-use two toe-nails (total 4 nails) on both sides of strut.

3) Struts may also be cut-to-fit and driven in without wedges, or Ellis post screw jacks may be used.

4) Struts may also be manufactured, see Note 11.

Installation Notes

1) Uprights may be nailed to plywood before or after setting plywood into excavation.

2) Move spoil pile and obstructions a minimum of 2 ft from trench edge and place edge protection before installing shoring.

3) Place ladder within 25 ft of work. Ladder must be secure and accessible.

4) While working off a ladder and until top strut is secured, workers may only work within waist level to lip of trench and must be tied off.

5) Remove struts from bottom to top. If there is sheeting movement when bottom strut is removed, leave shoring in place and bury or remove with power equipment from outside the trench

California State Fire Training **1131 S. Street** **Sacramento, Ca. 95811**		**CER. Inc.** **Construction Engineering Resource, Inc.** **1837 Wright Street** **Santa Rosa, Ca. 95404**
		Job #1373-2 / 10/1/2013 Drawn by: JT / Sheet 2 of 3

Provided by CMC Rescue, Inc.
Copies of this form can be downloaded at cmcrescue.com/forms.

Tabulated Data for Trench Rescue Shoring

WALE with STRUT and PLYWOOD SYSTEM

TABULATED DATA FOR TRENCH RESCUE SHORING

Notes

1) This shoring system is in accordance with Cal OSHA Article 6, Section 1541.1(c)(3) Option 3-Designs Using Other Tabulated Data. This tabulation is for the purpose of protecting rescue personnel from cave-ins while rescuing victims of collapsed excavations and trenches, and training and for no other purpose.
2) In order to use these tabulations the soil must first be classified as Type C-60 or C-80. The soil loading configuration is rectangular. This means that the soil pressure at the top of the excavation is the same as at the ultimate depth of the excavation. **Read all element size and spacing requirements from the line at the depth the final excavation is expected to be ("original trench depth").**
3) C-60 Soil includes all soil types that will stand long enough to install shoring and have a water level at or below the bottom of the excavation.
4) Type C-80 soil is soil that will not stand up long enough to install shoring. Generally shoring in C-80 soil has to be installed in short increments or driven into the soil as excavation is taking place. Prior to reaching 12 ft deep in marine clays such as San Francisco "Bay Mud", Gulf States Swamp Mud, etc" an engineer should be consulted. If there is any additional deflection or movement after elements are installed additional upright and strutting may be required.
5) Minimum shoring system length is 2 sets. **The general rule for shoring system length is that it should be at least as long as the shoring system is deep.**
6) This tabulation includes loading from a spoil pile set back 2 feet from edge of trench and no higher than 4 ft and foot traffic. All heavy equipment and vehicles to be set back at least the depth of the trench.
7) Wood members shall be minimum Douglas fir #2 and better, S4S.
8) **Plywood shall be minimum 3/4" CD X. Decrease horizontal spacing, double up plywood or decrease upright spacing if deflection is occurring due to soil movement.**
9) Install strutting from top to bottom. Nailing can be done in stages by first using enough nails to stabilize shoring and then following through to make sure that required nail quantity is achieved.
10) This shoring system may be used in conjunction with Upright with Strut and Plywood System, and Trench End Shore System.
11) Alternative manufactured strut systems such as screw jacks, pneumatic struts, and single/double cylinder hydraulic jacks may be substituted for timber struts installed in accordance with their tabulated data.
12) If plywood is ¾" Finform it is OK to eliminate the 2x12 upright and use struts at the tabulated spacing nailed directly to the Finform.
13) Two ¾" CDX plywood sheets may be used in lieu of one sheet of ¾" CDX with a 2x12 upright.
14) Aluminum fire service ladders with 4x4 cribbing may be used as an upright or waler. (see CMC Trench Recue Manual)

REGISTERED PROFESSIONAL ENGINEER
JOE TURNER
No. 37334
CIVIL
STATE OF CALIFORNIA

California State Fire Training 1131 S. Street Sacramento, Ca. 95811		CER. Inc. Construction Engineering Resource, Inc. 1837 Wright Street Santa Rosa, Ca. 95404
		Job #1373-2 / 10/1/2013 Drawn by: JT / Sheet 3 of 3

Provided by CMC Rescue, Inc.
Copies of this form can be downloaded at cmcrescue.com/forms.

Tabulated Data for Trench Rescue Shoring

TRENCH END SHORE SYSTEM

TABULATED DATA FOR TRENCH RESCUE SHORING (Note 1)

OSHA TYPE C-60 (Note 3)

Max Depth (ft)	Wale / Strut Vertical Spacing (ft) — Trench Width 5 ft			6 ft			8 ft			10 ft			12 ft		
	Strut 4x4	2x4+4x4	2-4x4	4x4	2x4+4x4	2-4x4	4x4	2x4+4x4	2-4x4	4x4	2x4+4x4	2-4x4	4x4	2x4+4x4	2-4x4
6	4	4	4	4	4	4	2	3	4	1	2	4	0	1	4
8	4	4	4	4	4	4	2	3	4	1	1	4	0	1	3
10	4	4	4	4	4	4	2	2	4	1	1	4	0	0	3
12	4	4	4	3	4	4	1	2	4	1	1	4	0	0	2
14	3	4	4	2	3	4	1	1	4	1	0	3	0	0	2
16	3	4	4	2	3	4	1	1	4	0	0	3	0	0	1
18	2	3	4	1	2	4	1	1	4	0	0	2	0	0	1
20	2	3	4	1	2	4	1	1	3	0	0	2	0	0	1

OSHA TYPE C-80 (Note 4)

Max Depth (ft)	Wale / Strut Vertical Spacing (ft) — Trench Width 5 ft			6 ft			8 ft			10 ft			12 ft		
	Strut 4x4	2x4+4x4	2-4x4	4x4	2x4+4x4	2-4x4	4x4	2x4+4x4	2-4x4	4x4	2x4+4x4	2-4x4	4x4	2x4+4x4	2-4x4
6	4	4	4	3	4	4	2	4	4	0	2	4	0	1	2
8	4	4	4	2	4	4	2	4	4	0	1	3	0	1	2
10	3	4	4	2	4	4	1	3	4	0	1	2	0	0	2
12	2	4	4	1	4	4	1	2	4	0	0	2	0	0	2
14	2	4	4	1	4	4	1	2	3	0	0	2	0	0	1
16	1	4	4	1	3	4	1	1	3	0	0	1	0	0	1
18	1	3	4	1	3	3	0	1	2	0	0	1	0	0	1
20	1	2	4	1	2	3	0	1	2	0	0	1	0	0	1

Sheeting (Note 8) C-60 and C-60	
end wall	3/4" CDX with shims at each waler/strut
side wall	3/4" CDX with 2x12 upright

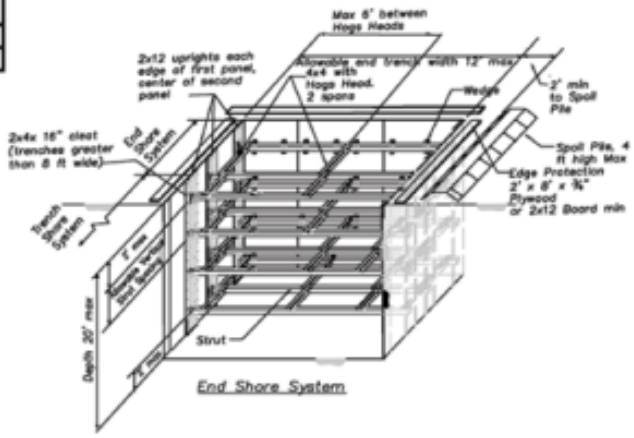

California State Fire Training 1131 S. Street Sacramento, Ca. 95811		CER, Inc. Construction Engineering Resource 1837 Wright St. Santa Rosa, Ca. 95404
		Job #1373-3 — 10/1/2013 Drawn by: JT — Sheet 1of 3

Provided by CMC Rescue, Inc.
Copies of this form can be downloaded at cmcrescue.com/forms.

Tabulated Data for Trench Rescue Shoring

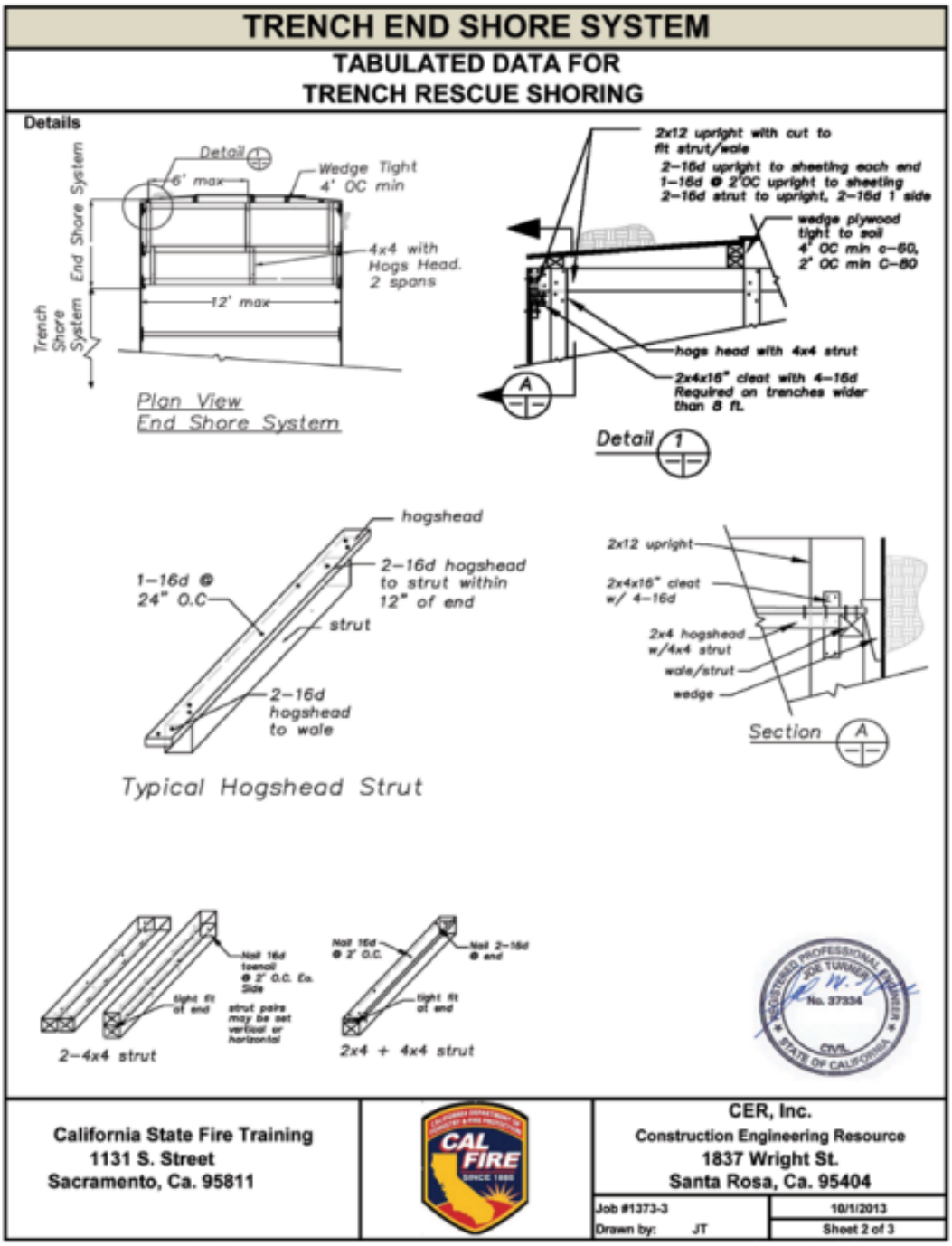

Provided by CMC Rescue, Inc.
Copies of this form can be downloaded at cmcrescue.com/forms.

Tabulated Data for Trench Rescue Shoring

TRENCH END SHORE SYSTEM

TABULATED DATA FOR TRENCH RESCUE SHORING

Notes

1) This shoring system is in accordance with Cal OSHA Article 6, Section 1541.1(c)(3) Option 3-Designs Using Other Tabulated Data. This tabulation is for the purpose of protecting rescue personnel from cave-ins while rescuing victims of collapsed excavations and trenches, training and for no other purpose.
2) In order to use these tabulations the soil must first be classified as Type C-60 or C-80. The soil loading configuration is rectangular. This means that the soil pressure at the top of the excavation is the same as at the ultimate depth of the excavation. **Read all element size and spacing requirements from the line at the depth the final excavation is expected to be ("original trench depth").**
3) C-60 Soil includes all soil types that will stand long enough to install shoring and have a water level at or below the bottom of the excavation.
4) Type C-80 soil is soil that will not stand up long enough to install shoring. Generally shoring in C-80 soil has to be installed in short increments or driven into the soil as excavation is taking place. Prior to reaching 12 ft deep in marine clays such as San Francisco "Bay Mud", Gulf States Swamp Mud, etc" an engineer should be consulted. If there is any additional deflection or movement after elements are installed additional upright and strutting may be required.
5) Minimum shoring system length is 2 sets. **The general rule for shoring system length is that it should be at least as long as the shoring system is deep.**
6) This tabulation includes loading from a spoil pile set back 2 feet from edge of trench and no higher than 4 ft and foot traffic. All heavy equipment and vehicles to be set back at least the depth of the trench.
7) Wood members shall be minimum Douglas fir #2 and better, S4S.
8) **Plywood shall be minimum 3/4" CD X. Decrease horizontal spacing, double up plywood or decrease upright spacing if deflection is occurring due to soil movement.**
9) Install strutting from top to bottom. Nailing can be done in stages by first using enough nails to stabilize shoring and then following through to make sure that required nail quantity is achieved.
10) This shoring system may be used in conjunction with Upright with Strut and Plywood, and Wale with Strut and Plywood System.
11) Alternative manufactured strut systems such as screw jacks, pneumatic struts, and single/double cylinder hydraulic jacks may be substituted for timber struts installed in accordance with their tabulated data.
12) If plywood is ½" Finform it is OK to eliminate the 2x12 upright and use struts at the tabulated spacing nailed directly to the Finform.
13) Two ½" CDX plywood sheets may be used in lieu of one sheet of ½" CDX with a 2x12 upright.
14) Aluminum fire service ladders with 4x4 cribbing may be used as an upright or waler. (see CMC Trench Recue Manual)

Framing Notes-

1) Use only 1 wedge set, do not stack them.

2) General rule for nailing strut connections-use two toe-nails (total 4 nails) on both sides of strut.

3) Struts may also be cut-to-fit and driven in without wedges, or Ellis post screw jacks may be used.

4) Struts may also be manufactured, see Note 11.

Installation Notes

1) Uprights may be nailed to plywood before or after setting plywood into excavation.

2) Move spoil pile and obstructions a minimum of 2 ft from trench edge and place edge protection before installing shoring.

3) Place ladder within 25 ft of work. Ladder must be secure and accessible.

4) While working off a ladder and until top strut is secured, workers may only work within waist level to lip of trench and must be tied off.

5) Remove struts from bottom to top. If there is sheeting movement when bottom strut is removed, leave shoring in place and bury or remove with power equipment from outside the trench.

REGISTERED PROFESSIONAL ENGINEER JOE TURNER No. 37334 CIVIL STATE OF CALIFORNIA

California State Fire Training 1131 S. Street Sacramento, Ca. 95811	CAL FIRE	CER, Inc. Construction Engineering Resource 1837 Wright St. Santa Rosa, Ca. 95404 Job #1373-3 — 10/1/2013 Drawn by: JT — Sheet 3 of 3

Provided by CMC Rescue, Inc.
Copies of this form can be downloaded at cmcrescue.com/forms.

Tabulated Data for Trench Rescue Shoring

ALTERNATIVE for UPRIGHT

TABULATED DATA FOR
TRENCH RESCUE SHORING(Note 1)

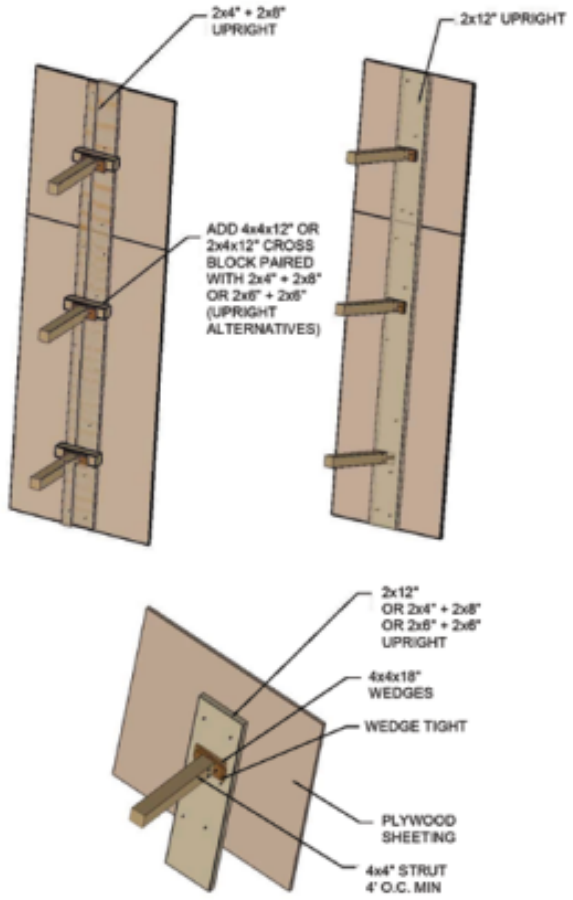

Sketch 1

CER, INC - CONSTRUCTION ENGINEERING RESOURCE, INC
1837 Wright St. Santa Rosa, CA 95404 Ph (707) 484-4704 Fax (707) 523-3808
Web Site-excavationsafety.com E-Mail- jmtengr2@aol.com

Provided by CMC Rescue, Inc.
Copies of this form can be downloaded at cmcrescue.com/forms.

Tabulated Data for Trench Rescue Shoring

CER, INC CONSTRUCTION ENGINEERING RESOURCE, INC
Engineering Consulting Construction Management Claims Analysis

July 3, 2012

To: Firescope US&R Specialist Working Group

Attn: Battalion Chief Mark Brown, Chair

Re: 2x12 uprights and OSHA Subpart P Options 3 and Option 4

Question-Why is the use of the rescue shoring application tabulated data used under OSHA Option 3-other tabulated data instead of Option 4 design by a registered civil engineer.

The short answer is:

> Under option 3 designs utilizing tabulated data are configured by a competent person at the site utilizing tabulated information. The tabulated information can be utilized to develop a shoring system at any location. The tabulated data is developed and stamped by a registered engineer but the engineer is not necessarily involved in deciding the configuration of the shoring system.
>
> Under option 4 design by a civil engineer the plan and shoring configuration is developed by a registered engineer and is specific to the site. The person constructing the shoring system follows the plan. Under this option there would have to be a civil engineer called in for every trench rescue situation. Also it is important to note that if the trench rescue shoring configuration needs to be altered or different than shown on the tabulated data an engineer must approve the changes.
>
> From the OSHA oversight perspective with option 3 they look to see that the person that configured the shoring system adhered to the tabulated data and under option 4 they look to see if the engineered plan was adhered to.

I am attaching a document, **CALIFORNIA TRENCH RESCUE SHORING, DRAFT DEVELOPMENT OF TABULATED DATA**. I have been developing this document as this project has proceeded and is intended to be the basis for the shoring system we are developing.

Question-Can we use 2x8 uprights instead of 2x12 uprights.

Timber strutted trench shoring systems are based on soil arching between rigid elements of the shoring. The plywood sheeting is the least rigid and the timber or metal strut is the most rigid. The rigidity of the upright affects the rigidity of the sheeting and the effectiveness of the soil arching to transmit the loads ultimately to the struts. The following are the factors that determine that a 2x12 is required and a 2x8 is insufficient.

1837 Wright St. Santa Rosa, CA 95404 Ph (707) 484-4704 Fax (707) 523-3808
Web Site-excavationsafety.com E-Mail jmtengr2@aol.com

Provided by CMC Rescue, Inc.
Copies of this form can be downloaded at cmcrescue.com/forms.

Tabulated Data for Trench Rescue Shoring

CER, INC CONSTRUCTION ENGINEERING RESOURCE, INC

Engineering Consulting Construction Management Claims Analysis

April 30, 2014

To: Stan Klopfenstein
Executive Director
Regional Training Group
Los Angeles Area Fire Chief's Assn.

Attn: Stan Klopfenstein

Re: Letter of 6/3/12-Firescope US&R Specialist Working Group
2x12 uprights and OSHA Subpart P Options 3 and Option 4

Stan;

This is in further response to the referenced letter and questions.

As stated in the letter the upright should be minimum 2x12. As shown in attached sketch it is also ok to use a 2x8 and 2x4 or 2-2x6with a 4x4 or 2x4 cross block. This configuration provides equivalent shear and bending strength as the 2x12.

The tabulated data for this project was developed utilizing allowable stress design with timber values from the National Design Specifications for Wood Construction, 2005 edition, NDS developed by the The American Forest and Paper Association. These are the same standards adopted by all US building codes.

The soil loading values are developed utilizing apparent earth pressure theories developed by Terzoghi, Peck and Hanson. Engineering judgement is applied and drawn from over 25 years of experience in excavation shoring system design.

Best Regards

Joe Turner

REGISTERED PROFESSIONAL ENGINEER
JOE TURNER
No. 37334
Exp. 6-30-14
CIVIL
STATE OF CALIFORNIA

1837 Wright St. Santa Rosa, CA 95404 Ph (707) 484-4704 Fax (707) 523-3808
Web Site-excavationsafety.com E-Mail jmtengr2@aol.com

Provided by CMC Rescue, Inc.
Copies of this form can be downloaded at cmcrescue.com/forms.

Tabulated Data for Trench Rescue Shoring

CER, INC - CONSTRUCTION ENGINEERING RESOURCE, INC

- The 2x12 cuts the plywood free span to 18.25" and the 2x8 provides a free span of 20.25". The rigidity of the plywood is increased by 25% with the 2x12 upright.
- The upright must have sufficient shear and bending strength to with stand soil loading. Utilizing allowable bending and shear strength for Douglas Fir boards a 2x12 has sufficient section strength to support a C-80 soil load between the struts and a 2x8 does not.

Also as a durability issue the 2x12 will not fail during lifting and shore installation while it is possible for a 2x8 to break in two during lifting of a long shoring set.

You are welcome to contact me at this e-mail or my phone (707) 484-4704 if you have further questions regarding this.

Best Regards

Joe Turner

1837 Wright St. Santa Rosa, CA 95404 Ph (707) 484-4704 Fax (707) 523-3808
Web Site-excavationsafety.com E-Mail- jmtengr2@aol.com

Provided by CMC Rescue, Inc.
Copies of this form can be downloaded at cmcrescue.com/forms.