DGS Small GESA 4 FIN.1 GESA
Department of Conservation & Natural Resources
Western PA Region

Energy Financing Providers

COMMONWEALTH OF PENNSYLVANIA
DEPARTMENT OF GENERAL SERVICES
HARRISBURG

Tom Wolf
Governor

Curt Topper
Secretary

Small GESA-4 FIN.1

DCNR – Parks & Forestry Western Region Project

TABLE OF CONTENTS

1. Notice to Financial Bidders
2. Instructions to Financial Bidders for GESA Project
3. Financial Bid Proposal for GESA Project which includes:
    a. Responsiveness Checklist
    b. General Information
    c. Certification and Bid Signature Page
4. Installment Purchase Agreement and Payment Schedule with Exhibits containing:
    a. GESA Contract
        i. Contract Bonds
        ii. Scope of Work
        iii. Assured Performance Guarantee for Small GESA Contract
    b. Form of Acceptance Certificate
    c. Payment Schedule
5. Other GESA Contract Documents including:
    a. Request for Proposal (RFP) for Small GESA Contractor
    b. Selected Small GESA Contractor's Proposal
    c. General Conditions
    d. Bulletins
    e. Administrative Procedures
6. Energy Audit

DATE OF ISSUE: March 22, 2018

NOTICE TO FINANCIAL BIDDERS

Department of General Services, Office of Energy and Resource Management, 401 North Street, Harrisburg, Pennsylvania 17120

It is the responsibility of each bidder to ensure that its bid is received by the Department of General Services prior to the date and time set for the bid opening. No bid shall be considered if it arrives after the Bid Opening Date and Time, regardless of reason for the late arrival.

Financing.....Energy Financial Provider for
Guaranteed Energy Savings Act Project

Project Location.....DCNR – Parks & Forestry
Western Region, Pennsylvania

Professional.....Department of General Services
Energy and Resource Management Office

Agency .....Department of Conservation & Natural Resources

Brief Description.....This solicitation seeks financing for the GESA Contract described in the Bidding Documents including the Energy Audit (EA). The Bidder / Energy Financial Provider ("Financer") will be required to execute the Installment Purchase Agreement and Payment Schedule included in the Bidding Documents. The GESA Contract Documents are included with the Bidding Documents.

Bid Opening Date and Time .....Monday, April 16, 2018 at 2:00 PM

Contract Numbers.....D.G.S. Small GESA -4 FIN.1
....DCNR – Parks & Forestry Western Region Project GESA FINANCING
Collective No.: CN00038813

Proposed Term of Financing.....20 years starting 12 months after completed construction

Proposal Period .....60 Days allowed from Bid Opening until Award of
Installment Purchase Agreement

Bidder / Financer is expected to hold interest rates for 90 days from the date and time of Bid Opening.

MANDATORY Vendor Registration:.....All Bidders must be registered to and must have a current & active PA Vendor Number. Register at www.pasupplierportal.state.pa.us

Contact Office.....	Energy and Resource Management Office Department of General Services
Mailing Address and Telephone Number to receive contract documents.	Room 403 North Office Building 401 North Street Harrisburg, Pennsylvania 17120 Telephone No: (717) 705-5946 Contact: Bidder Services

For information on the project please contact:
Rebecca Tomlinson (717) 705-5946, email retomlinso@pa.gov

THE INSTRUCTIONS TO FINANCIAL BIDDERS FOR GESA PROJECTS, INSTALLMENT PURCHASE AGREEMENT, AND THE GESA CONTRACT DOCUMENTS, ARE INCORPORATED INTO AND APPLY TO THIS PROJECT.

PRE-BID CONFERENCE

NO PRE-BID CONFERENCE WILL BE SCHEDULED

INSTRUCTIONS
TO
FINANCIAL BIDDERS
FOR GESA PROJECT

Small GESA-4 FIN.1

pennsylvania

DEPARTMENT OF GENERAL SERVICES

DCNR – PARKS & FORESTRY

WESTERN REGION, PENNSYLVANIA

TABLE OF CONTENTS

SECTIONS		PAGE NO.
1.	FINANCING TO BE PROVIDED	1
2.	FAMILIARITY WITH PROPOSED GESA CONTRACT WORK	1
3.	INTERPRETATION OF CONTRACT DOCUMENTS	1
4.	SUBMISSION OF BIDS	1
5.	SIGNING OF THE BID	1
6.	AWARD TO A FOREIGN CORPORATION	2
7.	TIMELY DELIVERY OF BID PROPOSAL	2
8.	DELIVERY OF BID IN CLEARLY MARKED ENVELOPE	2
9.	WITHDRAWAL OR MODIFICATION OF A BID PRIOR TO BID OPENING	2
10.	BID OPENING PROCEDURE	2
11.	REJECTION OF BID	3
12.	WITHDRAWAL OF BIDS AFTER BID OPENING	3
13.	EXPERIENCE QUESTIONNAIRE & FINANCIAL STATEMENT PROVIDED ON REQUEST	3
14.	COLLUSIVE BIDS WILL BE REJECTED	3
15.	BID PROTEST PROCEDURE	3
16.	BIDDER CERTIFIED NOT UNDER DEBARMENT	4
17.	REIMBURSEMENT OF COSTS OF INSPECTOR GENERAL INVESTIGATION	4
18.	CURRENT LIST OF SUSPENDED AND DEBARRED CONTRACTORS	4
19.	ASSIGNMENT OF ANTITRUST CLAIMS	4

SECTIONS		PAGE NO.
20.	CONTRACTOR INTEGRITY PROVISIONS	4
21.	AWARD OF INSTALLMENT PURCHASE AGREEMENT (i.e., CONTRACT)	8
22.	EXECUTION OF INSTALLMENT PURCHASE AGREEMENT	9
23.	FAILURE TO EXECUTE INSTALLMENT PURCHASE AGREEMENT	9
24.	VETERAN'S PREFERENCE	9
25.	PROVISIONS CONCERNING THE AMERICANS WITH DISABILITIES ACT	9
26.	ENERGY FINANCE PROVIDERS BID PACKAGE CONTENTS	10

FAILURE TO COMPLY WITH THESE INSTRUCTIONS MAY RESULT IN THE REJECTION OF THE BID AS NOT RESPONSIVE.

SECTION 1. **FINANCING TO BE PROVIDED.** The financing to be provided is for the GESA Contract described in the bidding documents and the Investment Grade Audit (IGA). The GESA Contract Documents may be inspected during regular business hours at the Energy and Resource Management Office of the Department of General Services, located at Room 403, 401 North Street, Harrisburg, Pennsylvania 17120. The successful Bidder / Energy Financial Provider ("Financer") will be required to execute the Installment Purchase Agreement and Payment Schedule included in the Bidding Documents.

SECTION 2. **FAMILIARITY WITH PROPOSED GESA CONTRACT WORK.** The Bidder is responsible for its due diligence regarding the Investment Grade Audit (IGA) and for examining the nature and location of the GESA Contract Work. The Bidder shall also examine the Installment Purchase Agreement and proposed GESA Contract Documents pertaining to the Project. After the award of the contract, the Financer may not submit any claim alleging insufficient data, incorrectly assumed conditions, or misunderstanding with regard to matters for which no such clarification was sought during the bidding phase of the Project.

SECTION 3. **INTERPRETATION OF BIDDING DOCUMENTS.**

A. Requests for Interpretation (RFI) during the bid stage **shall be submitted in writing/email** to the name and address found in the Notice to Bidders. A copy of the RFI must also be forwarded at the same time to the Director, Energy and Resource Management, Department of General Services, 401 North Street, Harrisburg, Pennsylvania 17120. All RFIs related to the proposed Work or proposed contract documents must be received, in writing, by the Department, **no later than close of business five (5) days prior to the Bid Opening Date**. Only written RFIs received no later than five (5) days prior to the date fixed for the opening of bids will be considered by the Department. If a request is received within 5 days of the bid opening date, the Department may, in its sole discretion, answer the request. Requests via emails shall be considered "written" requests.

B. **NEITHER THE DEPARTMENT NOR ANY REPRESENTATIVE OF THE FUNDING AGENCY SHOULD BE ASKED TO PROVIDE ANY ORAL INTERPRETATION TO ANY BIDDER RFI OF THE GESA CONTRACT DOCUMENTS. ANY CONVERSATION BETWEEN A BIDDER AND EITHER THE DEPARTMENT, OR THE REPRESENTATIVE OF THE FUNDING AGENCY FOR WHOM THE PROJECT IS BEING CONSTRUCTED, SHOULD NOT BE RELIED UPON BY ANY BIDDER, IS NOT BINDING UPON THE DEPARTMENT, AND SHALL NOT BECOME PART OF THE INSTALLMENT PURCHASE AGREEMENT UNLESS THE INFORMATION SUBSEQUENTLY APPEARS IN A WRITTEN BULLETIN.**

C. The Department's response to any RFI will be in the form of a written bulletin signed by the Department. The Department will forward all bulletins to all Bidders that obtained bidding documents for the Project. All bulletins become a part of the Installment Purchase Agreement, and all Bidders are bound by all bulletins issued on the project.

SECTION 4. **SUBMISSION OF BIDS.** All bids shall be submitted on the form prepared by the Department. Bidder should retain a copy for their own use. All entries on the bid must be in ink or typewritten, preferably in blue ink to indicate an original writing. In case of discrepancy between the words and numbers, the written words are the bid price. The GESA Financial Bid form must be completed and a preliminary Payment Schedule must be submitted with the Bid. If the Interest Rate, Market Index, Spread (basis points), Other Fees, and/or All-In Total Payment on the GESA Financial Bid form are not completed and/or the preliminary Payment Schedule is not submitted with the Bid, **the Bid will be rejected as non-responsive**.

SECTION 5. **SIGNING THE BID.** The Bidder must sign the bid correctly as described in the bid documents. The signature must be an ORIGINAL and HAND-SCRIPTED signature. If the bid is submitted

by a corporation, the bid should be signed by the President or Vice President and any one of the following officers of the Corporation: the Secretary, Assistant Secretary, Treasurer, or Assistant Treasurer. If not signed by the specified officers, the signing individual must be authorized to sign by the corporation's board of directors. If a person other than one of these officers executes the bid, a copy of the document authorizing that person to execute the bid must accompany the bid. **If the "Certification and Bid Signature Page" is left blank, the bid will be deemed void and the bid WILL BE REJECTED by the Department. The bidder will NOT be given any opportunity to sign the page after the time and date of the bid opening. A signature appearing any other place in the bid package shall not be sufficient to substitute for the lack of a signature on the Certification and Bid Signature page.**

SECTION 6. AWARD TO A FOREIGN BUSINESS. No contract will be awarded to a Bidder which is a foreign corporation, a foreign limited liability company, a foreign limited partnership, or which is operating under a fictitious or assumed name unless the Bidder has complied with, or agreed to comply with, the registration requirements under the Business Corporation Law of 1988 (15 Pa. C.S. §4121-§4131) and/or the Limited Liability Company Law of 1994 (15 Pa. C.S. §8981-§8982), and/or the Partnership Code (15 Pa. C.S. §8581-§8590), and/or the Fictitious Names Act (54 Pa. C.S. §301-§332).

SECTION 7. TIMELY DELIVERY OF BID PROPOSAL. The bidder must submit its bid to the Department prior to the time scheduled for bid opening, regardless of the method of delivery used. Any bid received after the time set for the bid opening will be returned to the bidder without being considered by the Department. The bid will not be returned if it is not possible to determine the identity and address of the bidder.

SECTION 8. DELIVERY OF BID IN CLEARLY MARKED ENVELOPE. Each bid should be submitted in a separate envelope. All bids shall be enclosed in a sealed envelope and marked plainly on the outside with the contract number, bid opening date and time. If the bid envelope is to be enclosed in another envelope for the purpose of express-type delivery, the exterior envelope shall be clearly marked as a bid and the contract number, bid opening date and time shall be shown on the exterior envelope.

A. Submission of Bid by Mail. If submitted by mail, the envelope shall be sent to the address for receiving bids noted in the "Notice to Bidders" for the particular Project, and should be sent Return Receipt Requested.

B. Submission of Bid by other than Mail. If submitted other than by mail, the bid must be delivered to the address noted in the particular "Notice to Bidders" prior to the time stated therein.

C. Submission of Bid by Hand Delivery. Photographic identification and proof of authorization will be required from individuals who are hand-delivering bids.

SECTION 9. WITHDRAWAL OR MODIFICATION OF A BID PRIOR TO BID OPENING

A. Complete Withdrawal Before Bid Date or Time. A Bid may be withdrawn by written notice or in person by a Bidder or its authorized representative (if their identity is established by photographic identification and proof of authorization, preferably on Bidder letterhead) and a receipt for the bid is signed prior to the exact hour and date set for the opening of bids.

B. Modification Before Bid Date or Time of a Bid of Bid Already Submitted But Not Opened. If, before the time of the bid opening, a Bidder wishes to modify a bid already delivered to the Department, the Bidder or its authorized representative (if their identity is made known through photographic identification and proof of authorization) may request that the Department return the bid, but only if the Bidder/representative signs a receipt for the bid **before** the exact hour and date set for the opening of bids. The Bidder or their authorized representative may then modify the bid and resubmit the bid so long as the modified bid complies with the requirements set forth in these Instructions to Financial Bidders for GESA Projects. The Department will not, under any circumstances, open a bid before the bid opening date and time.

SECTION 10. **BID OPENING PROCEDURE.** Bids will be opened and the All-In Total Payment will be read aloud publicly in the presence of one or more witnesses at the time and place designated in the Notice to Bidders. No inspection or photocopies of any Bid Proposal will be made at the bid opening. The amount of each bid, together with the name of each Bidder will be recorded. Such recorded information shall be considered unofficial and shall be open to public inspection after the bid opening. The bid tab, listing the Bidders and their bid amount, will formally be made available to interested parties typically within (3) three business days.

SECTION 11. **REJECTION OF BID.** The Department reserves the right to reject any or all bids or parts thereof. A bid may be rejected if it shows any omission, alterations of form, additions or deductions not called for, conditional language or uninvited alternate bids, or irregularities of any kind. The Department reserves the right, however, to waive technical defects or irregularities on bids. The Department may reject the bid of any Bidder failing to meet the requirements of these Instructions to Financial Bidders or any other requirements of Bidders set forth in the Bidding Documents.

SECTION 12. **WITHDRAWAL OF BIDS AFTER BID OPENING.** Within three (3) days after the opening of the bids, but before award, a Bidder may request permission to withdraw its entire bid if it submits a request, by email or mail, to the Department. The request must be addressed to the Director of the Energy and Resource Management Office. The request will not be considered received unless it is directed as set out in this section. With the request for withdrawal, the Bidder must submit evidence that the reason for withdrawal is a clerical mistake as opposed to a judgment mistake and was actually due to an unintentional arithmetical error.

SECTION 13. **EXPERIENCE QUESTIONNAIRE AND FINANCIAL STATEMENT PROVIDED ON REQUEST.** At the Department's request, or if specifically required by the bid, Bidders shall file an experience questionnaire and financial statement with the Department on the form provided by the Department. The questionnaire and statement shall be certified to be true and correct by an affidavit sworn to or affirmed before a Notary Public, or other officer empowered to administer oaths or affirmations. Falsification of any requested information shall result in a rejection of the bid as not responsible, forfeiture of the bid bond and/or cancellation of the Contract Award.

SECTION 14. **COLLUSIVE BIDS WILL BE REJECTED.** The bids of any Bidder or Bidders who engage in collusive bidding will be rejected. Any Bidder who submits more than one bid in such manner as to make it appear that the bids submitted are on a competitive basis from different parties will be considered a collusive Bidder. Submission of collusive bids will result in a Bidder being rejected as not responsible for subsequent projects. Nothing in this Section prevents a Bidder from superseding a bid by submitting a subsequent bid, delivered prior to bid opening, which expressly revokes the previous bid.

SECTION 15. **BID PROTEST PROCEDURE.** The Commonwealth Procurement Code (62 P.C. §1711.1, as amended) governs the protest procedure, which is summarized below. In the event this general description conflicts with the statute, the statutory language controls.

A. Who may File. Any Bidder or prospective Bidder who is aggrieved in connection with the bid or the award of a contract resulting from the bid may file a protest.

1. Prospective Bidder is an entity that has not submitted a bid in response to the Notice to Bidders.

2. Bidder is an entity that has submitted a bid in response to the Notice to Bidders.

B. Time Limits.

1. If a protest is filed by a prospective Bidder, a protest must be filed, in writing or by email, with the head of the Issuing Office **prior** to the bid opening date and time described in the Notice to Bidders.

2. If a protest is filed by a Bidder, the protest must be filed, in writing or email, with the Issuing Office within seven (7) days after the protesting Bidder knew or should have known of the facts giving rise to the protest **except** in no event may a protest be filed later than 7 days after the Notice of Award is posted on the DGS website.

3. Filed – shall be defined as the date upon which the Issuing Office receives the written protest.

4. If the Bidder fails to file a bid protest or files an untimely protest, then they shall be deemed to have waived the right to protest the solicitation or award of the contract in any forum. Untimely protests will be disregarded by the Department.

C. The Department may cancel an invitation for bids or may reject all bids at any time prior to the time a contract is executed by all parties when it is in the best interests of the Commonwealth. The Bidder may not submit a protest relating to cancellation of the bid or rejection of all bids.

D. A protest shall state all grounds upon which the protestant asserts the solicitation or award of the contract was improper. The protestant may submit with the protest any documents or information it deems relevant to the protest.

E. The full text of the Bid Protest Procedure can be found at 62 Pa.C.S §1711.1 *et seq.*

SECTION 16. BIDDER CERTIFIED NOT UNDER DEBARMENT. The Bidder must certify that it is not currently under suspension or debarment by the Commonwealth, any other state, or the federal government, and if the Bidder cannot so certify, then the Bidder agrees to submit along with the bid a written explanation of why such certification cannot be made.

SECTION 17. REIMBURSEMENT OF COSTS OF INSPECTOR GENERAL INVESTIGATION. The Financer shall reimburse the Commonwealth for the reasonable costs of investigation incurred by the Office of Inspector General for investigations of the Contractor's compliance with the terms of this or any other agreement between the Financer and the Commonwealth which result in the suspension or debarment of the Financer. Such costs shall include, but not be limited to, salaries of investigators, including overtime; travel and lodging expenses; and expert witness and documentary fees. The Contractor shall not be responsible for investigative costs for investigations which do not result in the Financer's suspension or debarment.

SECTION 18. CURRENT LIST OF SUSPENDED AND DEBARRED ENTITIES. The Financier/Contractor may obtain the current list of suspended and debarred Entities by referring to the Department of General Services' Construction and Public Works website or by contacting the:

Department of General Services
Office of Chief Counsel
603 North Office Building
Harrisburg, Pennsylvania 17125
Telephone No. (717) 783-6472
FAX No. (717) 787-9138

SECTION 19. ASSIGNMENT OF ANTITRUST CLAIMS. The Financer/Contractor and the Commonwealth recognize that, in actual economic practice, overcharges by the Financer's/Contractor's consultants, resulting from the violations of State or Federal antitrust laws, are, in fact, borne by the Commonwealth. As part of the consideration for the award of this contract, and, intending to be legally bound, the Financer/Contractor assigns to the Commonwealth all right, title and interest in, and to, any claims contractor now has, or may hereafter acquire, under State or Federal antitrust laws relating to the goods or services, which are the subject of this contract.

SECTION 20. CONTRACTOR INTEGRITY PROVISIONS

A. It is essential that those who seek to contract with the Commonwealth of Pennsylvania ("Commonwealth") observe high standards of honesty and integrity. They must conduct themselves in a manner that fosters public confidence in the integrity of the Commonwealth procurement process.

B. In furtherance of this policy, the Energy Financing Provider/Financer (referred to as "Contractor" in this Section) agrees to the following:

a. Contractor shall maintain the highest standards of honesty and integrity during the performance of this contract and shall take no action in violation of state or federal laws or regulations or any other applicable laws or regulations, or other requirements applicable to Contractor or that govern contracting with the Commonwealth.

b. Contractor shall establish and implement a written business integrity policy, which includes, at a minimum, the requirements of these provisions as they relate to Contractor employee activity with the Commonwealth and Commonwealth employees, and which is distributed and made known to all Contractor employees.

c. Contractor, its affiliates, agents and employees shall not influence, or attempt to influence, any Commonwealth employee to breach the standards of ethical conduct for Commonwealth employees set forth in the *Public Official and Employees Ethics Act, 65 Pa.C.S. §§1101 et seq*.; the *State Adverse Interest Act, 71 P.S. §776.1 et seq*.; and the *Governor's Code of Conduct, Executive Order 1980-18, 4 Pa. Code §7.151 et seq*., or to breach any other state or federal law or regulation.

d. Contractor, its affiliates, agents and employees shall not offer, give, or agree or promise to give any gratuity to a Commonwealth official or employee or to any other person at the direction or request of any Commonwealth official or employee.

e. Contractor, its affiliates, agents and employees shall not offer, give, or agree or promise to give any gratuity to a Commonwealth official or employee or to any other person, the acceptance of which would violate the *Governor's Code of Conduct, Executive Order 1980-18, 4 Pa. Code §7.151 et seq.* or any statute, regulation, statement of policy, management directive or any other published standard of the Commonwealth.

f. Contractor, its affiliates, agents and employees shall not, directly or indirectly, offer, confer, or agree to confer any pecuniary benefit on anyone as consideration for the decision, opinion, recommendation, vote, other exercise of discretion, or violation of a known legal duty by any Commonwealth official or employee.

g. Contractor, its affiliates, agents, employees, or anyone in privity with him or her shall not accept or agree to accept from any person, any gratuity in connection with the performance of work under the contract, except as provided in the contract.

h. Contractor shall not have a financial interest in any other contractor, subcontractor, or supplier providing services, labor, or material on this project, unless the financial interest is disclosed to the Commonwealth in writing and the Commonwealth consents to Contractor's financial interest prior to Commonwealth execution of the contract. Contractor shall disclose the financial interest to the Commonwealth at the time of bid or proposal submission, or if no bids or proposals are solicited, no later than Contractor's submission of the contract signed by Contractor.

i. Contractor, its affiliates, agents and employees shall not disclose to others any information, documents, reports, data, or records provided to, or prepared by, Contractor under this contract without the prior written approval of the Commonwealth, except as required by the *Pennsylvania Right-to-Know Law, 65 P.S. §§ 67.101-3104*, or other applicable law or as otherwise provided in this contract. Any information, documents, reports, data, or records secured by Contractor from the Commonwealth or a third party in connection with the performance of this contract shall be kept confidential unless disclosure of such information is:

    i. Approved in writing by the Commonwealth prior to its disclosure; or

    ii. Directed by a court or other tribunal of competent jurisdiction unless the contract requires prior Commonwealth approval; or

iii. Required for compliance with federal or state securities laws or the requirements of national securities exchanges; or

iv. Necessary for purposes of Contractor's internal assessment and review; or

v. Deemed necessary by Contractor in any action to enforce the provisions of this contract or to defend or prosecute claims by or against parties other than the Commonwealth; or

vi. Permitted by the valid authorization of a third party to whom the information, documents, reports, data, or records pertain: or

vii. Otherwise required by law.

j. Contractor certifies that neither it nor any of its officers, directors, associates, partners, limited partners or individual owners has not been officially notified of, charged with, or convicted of any of the following and agrees to immediately notify the Commonwealth agency contracting officer in writing if and when it or any officer, director, associate, partner, limited partner or individual owner has been officially notified of, charged with, convicted of, or officially notified of a governmental determination of any of the following:

i. Commission of embezzlement, theft, forgery, bribery, falsification or destruction of records, making false statements or receiving stolen property.

ii. Commission of fraud or a criminal offense or other improper conduct or knowledge of, approval of or acquiescence in such activities by Contractor or any affiliate, officer, director, associate, partner, limited partner, individual owner, or employee or other individual or entity associated with:

1. Obtaining;

2. Attempting to obtain; or

3. Performing a public contract or subcontract

Contractor's acceptance of the benefits derived from the conduct shall be deemed evidence of such knowledge, approval or acquiescence.

iii. Violation of federal or state antitrust statutes.

iv. Violation of any federal or state law regulating campaign contributions.

v. Violation of any federal or state environmental law.

vi. Violation of any federal or state law regulating hours of labor, minimum wage standards or prevailing wage standards; discrimination in wages; or child labor violations.

vii. Violation of the *Act of June 2, 1915 (P.L.736, No. 338)*, known as the *Workers' Compensation Act,* 77 P.S. 1 *et seq*.

viii. Violation of any federal or state law prohibiting discrimination in employment.

ix. Debarment by any agency or department of the federal government or by any other state.

x. Any other crime involving moral turpitude or business honesty or integrity.

Contractor acknowledges that the Commonwealth may, in its sole discretion, terminate the contract for cause upon such notification or when the Commonwealth otherwise learns that Contractor has been officially notified, charged, or convicted.

k. If this contract was awarded to Contractor on a non-bid basis, Contractor must, (as required by *Section 1641* of the *Pennsylvania Election Code*) file a report of political contributions with the Secretary of the Commonwealth on or before February 15 of the next calendar year. The report must include an itemized list of all political contributions known to Contractor by virtue of the knowledge possessed by every officer, director, associate, partner, limited partner, or individual owner that has been made by:

    i. Any officer, director, associate, partner, limited partner, individual owner or members of the immediate family when the contributions exceed an aggregate of one thousand dollars ($1,000) by any individual during the preceding year; or

    ii. Any employee or members of his immediate family whose political contribution exceeded one thousand dollars ($1,000) during the preceding year.

To obtain a copy of the reporting form, Contractor shall contact the Bureau of Commissions, Elections and Legislation, Division of Campaign Finance and Lobbying Disclosure, Room 210, North Office Building, Harrisburg, PA 17120.

l. Contractor shall comply with requirements of the *Lobbying Disclosure Act, 65 Pa.C.S. § 13A01 et seq*., and the regulations promulgated pursuant to that law. Contractor employee activities prior to or outside of formal Commonwealth procurement communication protocol are considered lobbying and subjects the Contractor employees to the registration and reporting requirements of the law. Actions by outside lobbyists on Contractor's behalf, no matter the procurement stage, are not exempt and must be reported.

m. When Contractor has reason to believe that any breach of ethical standards as set forth in law, the Governor's Code of Conduct, or in these provisions has occurred or may occur, including but not limited to contact by a Commonwealth officer or employee which, if acted upon, would violate such ethical standards, Contractor shall immediately notify the Commonwealth contracting officer or Commonwealth Inspector General in writing.

n. Contractor, by submission of its bid or proposal and/or execution of this contract and by the submission of any bills, invoices or requests for payment pursuant to the contract, certifies and represents that it has not violated any of these contractor integrity provisions in connection with the submission of the bid or proposal, during any contract negotiations or during the term of the contract.

o. Contractor shall cooperate with the Office of Inspector General in its investigation of any alleged Commonwealth employee breach of ethical standards and any alleged Contractor non-compliance with these provisions. Contractor agrees to make identified Contractor employees available for interviews at reasonable times and places. Contractor, upon the inquiry or request of the Office of Inspector General, shall provide, or if appropriate, make promptly available for inspection or copying, any information of any type or form deemed relevant by the Inspector General to Contractor's integrity and compliance with these provisions. Such information may include, but shall not be limited to, Contractor's business or financial records, documents or files of any type or form that refers to or concern this contract.

p. For violation of any of these Contractor Integrity Provisions, the Commonwealth may terminate this and any other contract with Contractor, claim liquidated damages in an amount equal to the value of anything received in breach of these provisions, claim damages for all additional costs and expenses incurred in obtaining another contractor to complete performance under this contract, and debar and suspend Contractor from doing business with the Commonwealth. These rights and remedies are cumulative, and the use or non-use of any one shall not preclude the use of all or any other. These rights and

remedies are in addition to those the Commonwealth may have under law, statute, regulation, or otherwise.

q. For purposes of these Contractor Integrity Provisions, the following terms shall have the meanings found in this Paragraph q.

i. "Confidential information" means information that a) is not already in the public domain; b) is not available to the public upon request; c) is not or does not become generally known to Contractor from a third party without an obligation to maintain its confidentiality; d) has not become generally known to the public through a act or omission of Contractor; or e) has not been independently developed by Contractor without the use of confidential information of the Commonwealth.

ii. "Consent" means written permission signed by a duly authorized officer or employee of the Commonwealth, provided that where the material facts have been disclosed, in writing, by pre-qualification, bid, proposal, or contractual terms, the Commonwealth shall be deemed to have consented by virtue of execution of this contract.

iii. "Contractor" means the individual or entity that has entered into this contract with the Commonwealth, including those directors, officers, partners, managers, and owners having more than a five percent interest in Contractor.

iv. "Financial interest" means:

1. Ownership of more than a five percent interest in any business; or

2. Holding a position as an officer, director, trustee, partner, employee, or holding any position of management.

v. "Gratuity" means tendering, giving or providing anything of more than nominal monetary value including, but not limited to, cash, travel, entertainment, gifts, meals, lodging, loans, subscriptions, advances, deposits of money, services, employment, or contracts of any kind. The exceptions set forth in the *Governor's Code of Conduct, Executive Order 1980-18*, the *4 Pa. Code §7.153(b)*, shall apply.

vi. "Immediate family" means a spouse and any unemancipated child.

vii. "Non-bid basis" means a contract awarded or executed by the Commonwealth with Contractor without seeking bids or proposals from any other potential bidder or offeror.

viii. "Political contribution" means any payment, gift, subscription, assessment, contract, payment for services, dues, loan, forbearance, advance or deposit of money or any valuable thing, to a candidate for public office or to a political committee, including but not limited to a political action committee, made for the purpose of influencing any election in the Commonwealth of Pennsylvania or for paying debts incurred by or for a candidate or committee before or after any election.

SECTION 21. AWARD OF INSTALLMENT PURCHASE AGREEMENT (i.e., CONTRACT). If DGS awards an Installment Purchase Agreement, it will be made to the responsible Bidder with the lowest "All-In Total Payment," whose "All-In Total Payment" coincides with their submitted preliminary Payment Schedule (monthly, commencing 1 month after final completion) and the project's Investment Grade Audit , within sixty (60) days from the Bid Opening Date. The 60-day period may be extended by written consent of the lowest responsible Bidder(s). Notice of Award of Contract will be made by letter mailed to the Financer and will be effective upon the date DGS mailed the Notice of Award. If the lowest Bidder withdraws its bid, declines to extend the bid or refuses the Award of Contract, the Department may award the Installment Purchase Agreement to the next lowest responsible Bidder or reject all bids and re-bid the

Financing. **There will be no Contract with the Commonwealth until all parties have fully executed the Installment Purchase Agreement**

SECTION 22. EXECUTION OF INSTALLMENT PURCHASE AGREEMENT. Within ten (10) days after receipt of the Installment Purchase Agreement, the successful Bidder, must:

A. Sign and return the Installment Purchase Agreement and Payment Schedule (monthly, commencing 12 months after final completion) to the Department of General Services, Room 403, 401 North Street, Harrisburg, Pennsylvania 17120; in care of the Energy and Resource Office, or emailed to the GESA administrator and

B. The payment schedule shall include payment number, payment date, payment amount, principle payment, interest payment and total balance.

C. The Commonwealth will review the Payment Schedule for accuracy;

a. If it is inaccurate, discuss the discrepancies with the Bidder; or
b. If accurate, process for Commonwealth signatures.

D. After all Commonwealth signatures (handwritten or electronic) are obtained and the Installment Purchase Agreement is fully executed, the Department will forward a written notification to you.

E. Understand and agree that a stamped "APPROVED ELECTRONICALLY" or similar wording by the Commonwealth on the Installment Purchase Agreement signature page constitutes a valid, binding contract with the Commonwealth and represents that all approvals required by Commonwealth contracting procedures have been obtained. The fully executed Contract may not contain "ink" signatures by the Commonwealth.

F. The monthly payments will be made automatically to the Bidder with no payment book or invoices.

SECTION 23. FAILURE TO EXECUTE INSTALLMENT PURCHASE AGREEMENT. Failure or refusal of the Financer to properly execute the Installment Purchase Agreement within the 10-day time will be viewed as a refusal to accept the Award. If the successful Bidder refuses to accept the award or properly execute the Installment Purchase Agreement within the 10-day time, the Department may award the Installment Purchase Agreement to the next lowest responsible Bidder, or reject all bids and re-bid the Financing

SECTION 24. VETERAN'S PREFERENCE. The Department strongly encourages that, all things being equal, contractors give preference in employment on projects of the Department to veterans of the Armed Services of the United States of America.

SECTION 25. PROVISIONS CONCERNING THE AMERICANS WITH DISABILITIES ACT. During the term of this contract, the Energy Financing Provider/Financer (referred to as "Contractor" in this Section) agrees as follows:

A. Pursuant to federal regulations promulgated under the authority of The Americans with Disabilities Act, 28 C.F.R. 35.202 et seq., the contractor understands and agrees that no individual with a disability shall, on the basis of the disability, be excluded from participation in this contract or from such activities provided for under this contract. As a condition of accepting and executing this contract, the Contractor agrees to comply with the "General Prohibitions Against Discrimination," 28 C.F.R. 35.130, and all other regulations promulgated under Title II of The Americans with Disabilities Act which are applicable to the benefits, services, programs, and activities provided by the Commonwealth of Pennsylvania through contracts with outside contractors.

B. The Contractor shall be responsible for and agrees to indemnify and hold harmless the Commonwealth of Pennsylvania from all losses, damages, expenses, claims, demands, suits, and actions brought by any party against the Commonwealth of Pennsylvania as a result of the Contractor's failure to comply with the provisions of paragraph A above.

SECTION 26. **Energy Finance Providers Bid Package Contents.** The bid package for solicitation of an Energy Financial Provider for the GESA includes:

- **A.** Notice to Financial Bidders
- **B.** Instructions to Financial Bidders for GESA Project
- **C.** Financial Bid Proposal for GESA Project which includes:
    1. Responsiveness Checklist
    2. General Information
    3. Certification and Bid Signature Page
- **D.** Installment Purchase Agreement and Payment Schedule with Exhibits containing:
    1. GESA Contract
        a. Contract Bonds
        b. Scope of Work
        c. Assured Performance Guarantee for Small GESA Contract
    2. Form of Acceptance Certificate
    3. Payment Schedule
- **E.** Other GESA Contract Documents including:
    1. Request for Proposal (RFP) for Small GESA Contractor
    2. Selected Small GESA Contractor's Proposal
    3. General Conditions
    4. Scope of Work by ECM
    5. Bulletins
    6. Administrative Procedures
- **F.** Investment Grade Audit

Financial Bid Proposal
for
Guaranteed Energy Savings Project
Contract No.
DGS Small GESA 4 DCNR – Western Region

Bid Index

Responsiveness Checklist

General Information

Certification and Bid Signature

Note: Please read all pages of this Bid Proposal. The Responsiveness Checklist is provided for your convenience and should not be returned to the Department. All other pages shall be completed and properly signed and/or sealed by Bidder in the appropriate place before being returned to the Department on or before the bid due date and time established in the Notice to Bidders. If the Bidder wishes to have a copy of their Bid Proposal, make the copy before submitting to the Department. The Department will not provide Bidder with a copy.

Responsiveness Checklist

This checklist is only provided as a courtesy to assist bidders in submitting a responsive bid. Compliance with the checklist does not guarantee a responsive bid. The checklist should not be returned to the Department since it will not be used to review the bid package.

	YES	NO
Bidder has acknowledged receipt of any Bulletins under "BULLETIN INFORMATION"		
Bidder has ensured the GESA Financial Bid form is fully complete		
Bidder has ensured the words match numbers in the All-In Total Payment, if not, words control		
Bidder has submitted the preliminary Payment Schedule		
Bidder has completed the Bid Signature Page		
Bidder has ensured that the Bid Signature Page is signed by authorized person		

pennsylvania
DEPARTMENT OF GENERAL SERVICES

GESA FINANCE BID PROPOSAL

Department of General Services
401 North Street
Harrisburg, PA 17125

Do not write in space below

Date: _____

Bid Opening Witness: _____

Legal Review: _____

CONTRACT NO. DGS SMALL GESA-4 DCNR WESTERN REGION FIN.1
COLLECTIVE NO.: CN00038813
GUARANTEED ENERGY SAVINGS PROJECT
FINANCING BID PROPOSAL FOR
SMALL GESA 4 – DCNR – PARKS & FORESTS – WESTERN REGION, PENNSYLVANIA

Bidder Name and Address:

_____

_____

_____

_____

_____

Bidder Phone #: _____

Bidder Email: _____

Bidder Federal ID #: _____

Vendor ID #: _____

BULLETIN INFORMATION: Bidder acknowledges receipt of the following Bulletin(s) and agrees they are part of this Bid Proposal.

Bulletin #___ Issue Date:_____ Bulletin #___ Issue Date:_____

Bulletin #___ Issue Date:_____ Bulletin #___ Issue Date:_____

Bulletin #___ Issue Date:_____ Bulletin #___ Issue Date:_____

GESA Financial Bid

Funding Placement	Private
Construction Duration	12 months
Repayment Period (commencing 1 month after final completion)	20 years
Payment Structure (commencing 1 month after final completion)	Monthly
*Interest Rate	
*Market Index	
*Spread (basis points)	
*Other fees (if applicable and include explanation)	
*°All-In Total Payment $	$_____ (figures) _____ _____ (written)

*These items are required to be completed. If they are not completed, the Bid will be rejected as non-responsive.

° All-In Total Payment is the total amount to be paid to the Financer over the Repayment Period.

BIDDER ORGANIZATIONAL INFORMATION

BIDDER ORGANIZATION (Check applicable box)

☐ The Bidder is a corporation, limited liability company, or partnership organized and existing under the laws of Pennsylvania and has been granted a certificate of authority to do business in Pennsylvania as required by the Business Corporation Law of 1988, as amended.

OR

☐ The Bidder is a corporation organized and existing under the laws of _____ and **has or has not** (circle one) been granted a certificate of authority to do business in Pennsylvania as required by the Business Corporation Law of 1988 (15 Pa. C.S. §4121-§4131), as amended.

OR

☐ The Bidder is a limited liability company organized and existing under the laws of _____ and **has or has not** (circle one) registered to do business in Pennsylvania as required by the Limited Liability Company Law of 1994 (15 Pa. C.S. §8981-§8982), as amended.

OR

☐ The Bidder is a limited partnership organized and existing under the laws of _____ and **has or has not** (circle one) registered to do business in Pennsylvania as required by the Partnership Code (15 Pa. C.S. §8581-§8590), as amended.

OR

☐ The Bidder is an individual or partnership trading under a fictitious or assumed name and **has or has not** (circle one) registered under the Fictitious Names Act (54 Pa. C.S. §301-§332), as amended.

BIDDER RESIDENCE INFORMATION

Bidder has a bona fide establishment in Pennsylvania at which it was transacting business when the Notice to Bidders for this Project was issued?

If "**Yes**", insert address below if different than address on page 1:

_____
_____
_____
_____

If "**No**", insert Bidder's office address if different than address on page 1.

_____
_____
_____
_____

Certification and Bid Signature

In conformity with the Energy Audit prepared for this Project and after examination of the contract documents including the Installment Purchase Agreement and Payment Schedule and issued Bulletins, which are made a part hereof as if fully set forth, the undersigned (hereinafter "Bidder"), submits this Bid Proposal and certifies by signing that:

1. Bidder is the only person(s) interested in this Bid as principal and this Bid Proposal is submitted without collusion with any person, firm or corporation; and

2. Bidder will execute the Installment Purchase Agreement within ten (10) days after receipt of the documents; and

3. Bidder agrees to provide the funding to complete the work set forth in the GESA Contract documents and the Energy Audit. It is understood that the first payment of the Payment Schedule is not due until twelve (12) months after the GESA Project is completed; and

4. Bidder agrees that DGS reserves the right to reject this and any or all Bid Proposals, or any part thereof or to waive technicalities required for the best interests of the Commonwealth; and

5. Bidder understands and acknowledges that all information provided by, and representations made by, the Bidder in the Bid Proposal are material and important and will be relied upon by the Issuing Office in awarding the contract(s). Any misstatement shall be treated as fraudulent concealment from the Issuing Office of the true facts relating to the submission of this bid. A misrepresentation shall be punishable under 18 Pa. C.S. § 4904; and

6. Bidder agrees that the Commonwealth of Pennsylvania may offset all or a portion of any and all payments that may become due and owing under the contract for this project against any and all debts owed to any other Commonwealth of Pennsylvania agency; and

7. The bid is made in good faith and not pursuant to any agreement or discussion with, or inducement from, any firm or person to submit a complementary or other noncompetitive bid; and

8. To the best knowledge of the person signing the bid, Bidder, its affiliates, subsidiaries, officers, directors, and employees are not currently under investigation by any governmental agency and have not in the last three (3) years been convicted or found liable for any act prohibited by State or Federal law in any jurisdiction, involving conspiracy or collusion with respect to bidding or proposing on any public contract, except as disclosed by the Bidder in its bid; and.

9. To the best of the knowledge of the person signing the Bid Proposal for the Bidder and except as otherwise disclosed by the Bidder in its bid, the Bidder has no outstanding, delinquent obligations to the Commonwealth including, but not limited to, any state tax liability not being contested on appeal or other obligation of the Bidder that is owed to the Commonwealth; and.

10. The Bidder is not currently under suspension or debarment by the Commonwealth, or any other state, or the federal government; and

11. The Bidder has not, under separate contract with the Issuing Office, made any recommendations to the Issuing Office concerning the need for the services described in the bid or the specifications for the services described in the bid; and

12. Bidder, by submitting its bid, authorizes all Commonwealth agencies to release to the Commonwealth information related to liabilities to the Commonwealth including, but not limited to, taxes, unemployment compensation, and workers' compensation liabilities; and

13. Until the awarded Bidder receives a fully executed and approved written Installment Purchase Agreement from the Issuing Office there is no legal and valid contract, in law or in equity, and the Bidder should not begin to perform Work; and

14. Bidder agrees to comply with the Non-Discrimination Sexual Harassment Clause in the Installment Purchase Agreement and is aware that implementation of nondiscrimination and equal opportunity is the policy of the Commonwealth of Pennsylvania. DGS has established a method of administration to assure that all contracting agencies and contractors are accorded equal employment opportunity without regard to race, color, national origin, ancestry, religious creed, age or sex; and

15. The person(s) signing this bid certifies that the information in this Bid Proposal is true and correct to the best of their knowledge and that the person(s) is authorized to represent the Bidder in connection with this certification

I state that _____ (Name of Bidder) submits this Bid Proposal and understands and acknowledges that the above representations (1 through 15) are material and important, and will be relied upon by the Department of General Services in awarding the Installment Purchase Agreement for which this bid is submitted. I understand and my firm understands that any misstatement in this affidavit is and shall be treated as fraudulent concealment from the Department of General Services of the true facts relating to the submission of this bid.

BIDDER IS AN INDIVIDUAL:

Witness: By:

_____ _____ _____

General Partner Date

BIDDER IS A PARTNERSHIP:

Witness: By:

_____ _____ _____

General Partner Date

BIDDER IS A LIMITED LIABILITY COMPANY:

Attest:	By:	
_____	_____	_____
Secretary	President	Date

OR

BIDDER IS A CORPORATION:

Attest:	By:	
_____	_____	_____
Secretary	President	Date

Installment Purchase Agreement and Payment Schedule
Small GESA 4 DCNR Western Region Project

This **Installment Purchase Agreement and Payment Schedule** ("Agreement") is entered into this ____ day of _____, 20___ between the Energy Financial Provider, [Financial Provider], a [State] corporation ("FINANCER") and the Commonwealth of Pennsylvania ("Commonwealth"), acting through the Department of Conservation & Natural Resources ("Funding Agency").

WITNESSETH:

WHEREAS, GESA Contractor and Commonwealth will enter into a Guaranteed Energy Savings Contract ("GESA Contract" --**Exhibit A**) for the implementation of the Energy Conservation Measures ("ECM") at the Funding Agency's facilities located in the Western Region, Pennsylvania, Small GESA 4 – DCNR West Project;

WHEREAS, the FINANCER will provide financing for the GESA Contract and receive payments from the Funding Agency in accordance with the terms of this Agreement;

WHEREAS, the GESA Contractor will implement/construct the ECMs and adhere to all terms of the GESA Contract; and

WHEREAS, the Funding Agency will approve payments to be made to the GESA Contractor for work satisfactorily completed by the GESA Contractor during the implementation/construction of the ECMs and make payments to the FINANCER in accordance with the terms of this Agreement.

NOW THEREFORE, the parties intending to be legally bound agree as follows:

1. FUNDING AND PAYMENT FOR GESA CONTRACT

   A. To assure the availability of moneys to pay the GESA Contractor, the cost of the GESA Contract for, inter alia, the implementation/construction of the ECMs, the FINANCER has, at the request of the Commonwealth, deposited $ .00 (the "Acquisition Amount") into a segregated escrow account (the "Escrow Account") at _____, (the "Escrow Agent") to be held, invested, and disbursed by the Escrow Agent in accordance with the terms of that certain Escrow and Account Control Agreement dated as of _____ by and among the Financer, the Funding Agency, and the Escrow Agent (the "Escrow Agreement").

   B. The ECMs will be implemented/constructed by the GESA Contractor at the location specified in the GESA Contract. The GESA Contractor will submit Applications for Payment in accordance with the GESA Contract, and once the Applications for Payment are reviewed/approved by the Funding Agency, the Funding Agency will request disbursement from the Escrow Account for the payment of the cost of the ECMs.

   C. The FINANCER shall then make payments to the GESA Contractor for the amount specified by the Funding Agency.

   D. In the event that the amounts in the Escrow Account are insufficient to pay the costs of the ECMs, the Funding Agency shall deposit additional funds into the Escrow Account to eliminate such insufficiency.

E. In the event that the amount in the Escrow Account exceeds the cost of the ECMs (the "Excess Funds"), the Funding Agency shall pay such Excess Funds to FINANCER and such Excess Funds shall be applied as a principal prepayment to the first payment on the Payment Schedule and to each succeeding payment on the Payment Schedule until all of the Excess Funds have been applied. Upon acceptance of all the ECMs, the Funding Agency shall deliver to FINANCER an Acceptance Certificate in the form attached to this Agreement as **Exhibit B**.

2. TERM

A. This Agreement will become effective upon receipt of a fully executed Agreement by all parties. This Agreement, unless earlier terminated as expressly provided for in this Agreement, will continue until all payments set in the Payment Schedule (**Exhibit C**) have been made in full ("Agreement Term").

3. PAYMENT

A. The Funding Agency agrees to pay to FINANCER, or any assignee of the FINANCER, the payments including the interest portion, as specified in the Payment Schedule at the office of FINANCER (or such other place as FINANCER or its assignee may from time to time designate in writing).

B. Such payments will be made commencing on (and thereafter) the dates set in the Payment Schedule.

C. Unless specifically provided otherwise in this Agreement, the Funding Agency's obligation to make the payments to the Financer shall commence approximately one (1) month after the Final Payment has been paid to the GESA Contractor by the Escrow Agent and shall be absolute and unconditional in all events except as expressly provided in Section 4 and Section 19.

D. The Funding Agency believes that sufficient funds can be obtained to make all payments during the Agreement Term and hereby covenants that it will do all things lawfully within its power to obtain, maintain, and properly request and pursue funds from which the payments may be made, including making provisions for such payments to the extent necessary in each budget submitted for the purpose of obtaining funding, using its best efforts to have such portion of the budget approved, and exhausting all available administrative reviews and appeals in the event that such portion of the budget is not approved.

E. It is the Funding Agency's intent to make payment for the full Agreement Term if funds are legally available, and in that regard, the Funding Agency represents that the use of the ECMs is essential to its proper, efficient, and economic operation.

F. During the Agreement Term, the Funding Agency will, upon the request of FINANCER, annually make available to FINANCER or its assignee current financial statements, budgets, proof of appropriation for the ensuing fiscal period, and such other financial information as may be requested by FINANCER or any assignee relating to the ability of the Funding Agency to continue to make installment payments and other sums due under this Agreement.

G. If payment or other sums owed by the Funding Agency is not paid when due, interest may accrue in accordance with State law.

4. NONAPPROPRIATION OF FUNDS

A. In the event that no funds or insufficient funds are appropriated and budgeted in any Commonwealth Fiscal Period for payments due under this Agreement, then the Funding Agency will immediately notify FINANCER or its assignee of such occurrence and this Agreement shall terminate on the last day of Commonwealth's Fiscal Period for which appropriations were received without penalty or expense to the Funding Agency of any kind whatsoever. In the event of such termination, the Funding Agency agrees to peaceable surrender possession of all ECMs requested by FINANCER in good operating condition, subject to normal wear and tear to FINANCER or its assignee on the date of such termination, packed for shipment in accordance with manufacturer's published specifications and with freight and insurance prepaid to FINANCER's or its assignee's nearest warehouse location in the United States, such location to be specified by FINANCER or its assignee. FINANCER or its assignee will have all legal and equitable rights and remedies to take possession of the ECMs. Upon such termination, title to the ECMs will revert to FINANCER or its assignee.

B. If on the thirtieth (30th) day after the commencement of any Fiscal Period, sufficient funds have not been appropriated for the purpose of making all of the payments scheduled to be paid in such Fiscal Period, the Funding Agency shall cause to be delivered written notice (a "notice of non-appropriation") to FINANCER or its assignee within ten (10) calendar days after such thirtieth (30th) day. Upon FINANCER's receipt of a notice of non-appropriation this Agreement shall terminate as of the end of the Fiscal Period just ended; provided, however, that such termination shall not become effective as of the end of such Fiscal Period just ended if, within ten (10) calendar days of the thirtieth (30th) day after the end of such Fiscal Period just completed, the Funding Agency shall cause to be delivered to FINANCER a written statement to the effect that it reasonably expects sufficient funds for the then-current Fiscal Period to be appropriated for this Agreement, and in such event that the term shall continue into the then-current Fiscal Period so long, but only so long, as an appropriation becomes available from which to make the payments. Notwithstanding the foregoing, the Funding Agency agrees that it will not cancel this Agreement under the provisions of this paragraph if any funds are appropriated to it, or by it, for this Guaranteed Energy Saving Act project for the Fiscal Period following the Fiscal Period in which funds were appropriated.

5. AUTHORITY AND AUTHORIZATION

A. Commonwealth represents, covenants, and warrants that:

I. The execution, delivery, and performance by Commonwealth of this Agreement have been duly authorized by necessary action on the part of Commonwealth;

II. This Agreement has been duly executed and delivered on behalf of Commonwealth and constitutes a legal, valid, and binding obligation of Commonwealth enforceable in accordance with its terms; and

III. The Commonwealth has complied with all bidding requirements, where necessary, and by due notification presented this Agreement for approval as a valid obligation on its part. The Commonwealth agrees that:

a. The Commonwealth will do or cause to be done all things necessary to preserve and keep the Agreement in full force and effect;

b. The Funding Agency has sufficient appropriations or other funds available to pay all amounts due for the current Fiscal Period;

c. The Funding Agency's obligations are not guaranteed by the United States of America or any agency or instrumentality;

d. The Funding Agency has not established and will not establish any sinking fund, redemption fund, debt service fund, reserve fund, replacement fund, or similar fund to be used to pay principal or interest composing the payments due;

e. The Funding Agency will take no action that would cause the interest portion of the payments due to become included in gross income of the recipient for federal income tax purposes under the Internal Revenue Code of 1986, as amended (the "Code"), and Treasury Regulations promulgated (the "Regulations"), and the Funding Agency will take and will cause its officers, employees, and agents to take all affirmative actions legally within its power necessary to ensure that the interest portion of the payments due does not become included in gross income of the recipient for federal income tax purposes under the Code and Regulations, all as amended from time to time (including, without limitation, the calculation and payment of any rebate required to preserve such exclusion); and

f. The Funding Agency will sign and submit to FINANCER for filing with the Secretary of the Treasury information reporting statements and other information relating to this Agreement at the times and in the forms required by the Code and the Regulations.

6. TITLE

A. Upon final acceptance of the implemented/constructed ECMs by Commonwealth, title to the ECMs will vest in Commonwealth, provided however, that

I. In the event of termination of this Agreement by the Funding Agency pursuant to NONAPPROPRIATION OF FUNDS paragraph and delivery of the ECMs to FINANCER; or

II. Upon repossession of the ECMs in the event of a default, title will immediately vest in FINANCER or its assignee.

7. SECURITY INTEREST

A. In order to secure all of its obligation, the Funding Agency hereby:

I. Grants to FINANCER a first priority security interest in any and all right, title, and interest of the Funding Agency in the ECMs and in all additions, attachments, accessions, and substitutions, and on any proceeds therefrom;

II. Agrees that this Agreement may be filed as a financing statement evidencing such security interest; and

III. Agrees to execute and deliver all financing statements, certificates of title, and other instruments necessary or appropriate to evidence such security interest.

B. Once all payments set in Payment Schedule have been made, then the Funding Agency will own the ECMs free and clear of all liens or other encumbrances.

8. PERSONAL PROPERTY

A. The ECMs are, and will remain, personal property, and will not be deemed to be affixed to, or be a part of, the real estate on which it may be situated.

9. MAINTENANCE

A. The Funding Agency, at its own cost and expense, will maintain the ECMs in good operating condition for the duration of this Agreement and will not use or deal with the ECMs in any manner which is inconsistent with any laws or regulations. The ECMs will not be misused, abused, wasted, or be allowed to deteriorate except for ordinary wear and tear resulting from its intended use. The Funding Agency agrees to cause the ECMs to be maintained pursuant to manufacturer's standard maintenance specifications and will provide proof of proper maintenance at FINANCER's request.

10. ALTERATIONS

A. The Funding Agency will not make any alterations, additions, or improvement to the ECMs without FINANCER's prior written consent unless such alterations, additions, or improvement may be readily removed without damage to the ECMs.

11. LIENS AND ENCUMBRANCES

A. Commonwealth shall keep the ECMs free and clear of all levies, liens, and encumbrances, except those created under this Agreement. The Funding Agency shall pay, when due, all charges which may be imposed upon the ownership, leasing, rental, sale, purchase, possession, or use of the ECMs, excluding, however, all taxes on or measured by FINANCER's income. If the Funding Agency fails to pay said charges when due, FINANCER shall have a right, but shall not be obligated, to pay said charges. If FINANCER pays any charges for which the Funding Agency is responsible or liable under this Agreement, the Funding Agency shall reimburse FINANCER.

12. RISK OF LOSS; DAMAGE; DESTRUCTION

A. Upon acceptance of the ECMs, Commonwealth and/or GESA Contractor, as per the terms of the GESA Contract, assumes all risks of loss or damage to the ECMs from any cause whatsoever, and no such loss of or damage to the ECMs or defect, or unfitness or obsolescence, shall relieve the Funding Agency of its obligation to make payments or to perform any other obligation under this Agreement.

B. In the event of damage to any item or ECM, the Funding Agency will immediately notify GESA Contractor and place the same in good repair. If the Funding Agency determines that any item of ECMs is lost, stolen, destroyed, or damaged beyond repair, the Funding Agency will either:

I. Replace the same with like ECMs in good repair; or

II. On the next payment date following occurrence of loss, pay FINANCER or its assignee

a. All amounts for said lost, stolen, destroyed, or damaged beyond repair ECM then owed by the Funding Agency to FINANCER under this Agreement, including the payment for such item(s) due on such date; and

b. The proportionate amount of applicable payment set in the PAYMENT SCHEDULE.

13. INSURANCE

A. GESA Contractor will insure against any or all risks in accordance with the GESA Contract. GESA Contractor shall demonstrate to the satisfaction of FINANCER or assignee that adequate insurance is provided. In the event of any loss, damage, injury, or accident involving the ECMs, Commonwealth will promptly provide GESA Contractor with written notice within ten (10) days and make available to GESA Contractor all relative information and documentation.

B. Upon final acceptance of ECMs, and in accordance with Section 6 of this Agreement, title of the ECMs will vest with the Commonwealth. Commonwealth will then self-insure against any or all risks assumed in this Agreement. Commonwealth shall demonstrate to the satisfaction of FINANCER or assignee that adequate self-insurance is provided. In the event of any loss, damage, injury, or accident involving the ECM(s), Commonwealth will promptly provide GESA Contractor with written notice within ten (10) days and make available to GESA Contractor all relative information and documentation.

C. Upon Commonwealth self-insuring the ECMs, Commonwealth will assume all risks and liabilities for injury to or death of any person or damage to any property, in any manner arising out of possession, use, operation, custody, control, condition, or storage of the ECMs by Commonwealth, whether such injury or death be with respect to Commonwealth's property or the property of other; provided, however, that said damage or injury results from the negligence of Commonwealth, it agents or employees, and that either Commonwealth agrees to settle such claim or judgment has been obtained against Commonwealth. This Section shall not be construed to limit or waive in any way the sovereign immunity of Commonwealth, liability of which under the Section is limited to amounts in which Commonwealth is otherwise permitted or required to respond in accordance with applicable law.

14. PREPAYMENT OPTION

A. Upon thirty (30) days' prior written notice from the Funding Agency to FINANCER, and provided that there is no Event of Default, or an event with which notice or lapse of time, or both, could become an Event of Default, then existing, the Funding Agency will have the right to terminate the Funding Agency's continued obligation to make payments, as specified in the PAYMENT paragraph and Payment Schedule to FINANCER on the purchase of the ECMs.

B. Under this paragraph, payments up to date of prepayment and the Purchase Price, along with any interest accrued from the date of the last payment, will be due to FINANCER on the date of prepayment. Upon satisfaction by the Funding Agency of such purchase conditions, FINANCER shall then have no rights, title, and interest in the ECMs. No voluntary prepayment is permitted prior to the date of the first scheduled payment under the Payment Schedule.

15. ASSIGNMENTS

A. Without FINANCER's prior written consent, Commonwealth will not assign, transfer, pledge, or grant any security interest in, or otherwise dispose, of this Agreement, the ECMs, or any interest in this Agreement or the ECMs. FINANCER may assign its rights, title, and interest to this Agreement, the ECMs, and any other documents executed with respect to this Agreement and/or grant or assign a security interest in this Agreement and the ECMs, in whole or in part. Any such assignee shall have all of the rights of FINANCER under this Agreement. Subject to the foregoing, this Agreement inures to the benefit of, and is binding upon, the heirs, executors, administrators, successors, and assigns of the parties.

B. Upon assignment of FINANCER's interests, FINANCER will cause written notice of such assignment to be sent to the Funding Agency, which will be sufficient if it discloses the name of the assignee and address to which further payments should be made. No further action will be required by FINANCER or by the Funding Agency to evidence the assignment, but the Funding Agency will acknowledge such assignments in writing if so requested.

C. Notwithstanding, the foregoing, no such assignments of FINANCER's interests shall be effective against the Funding Agency unless the Funding Agency receives notification in writing of said Agreement designating the name and address of any such assign. In compliance with Section 149(a) of the Internal Revenue Code, Commonwealth agrees to affix a copy of each notification of assignment to Commonwealth's counterpart of the Agreement.

D. NOT BEING THE MANUFACTURER OR VENDOR OF THE ECMs, ANY ASSIGNEE OF FINANCER SHALL BE DEEMED TO HAVE MADE NO WARRANTY OR REPRESENTATION, EITHER EXPRESS OR IMPLIED, AS TO THE VALUE, DESIGN, CONDITIONS, MERCHANTABILITY, OR FITNESS FOR A PARTICULAR PURPOSE OR FITNESS FOR USE OF THE ECMs. In no event shall any assignee be liable for any incidental, indirect, special, or consequential damage in connection with, or arising out of, this Agreement or the existence, furnishing, functioning, or the Funding Agency's use of any item of ECMs or products or services provided for in this Agreement.

16. EVENTS OF DEFAULT BY the Funding Agency

A. The term "Event of Default," as used in paragraphs 17 and 18, means the occurrence of any one of the following events:

I. The Funding Agency, in accordance with the GESA Contract, fails to make any payment as it becomes due in accordance with the terms of this Agreement, and any such failure continues for sixty (60) days after receipt of written notice of Default; or

II. The Funding Agency fails to perform or observe any other covenant, condition, or agreement to be performed or observed by it, and such failure is not cured within sixty (60) days after written notice by FINANCER.

17. REMEDIES BY FINANCER

A. Upon the occurrence of an Event of Default, and as long as such Event of Default is continuing, FINANCER may at its option, exercise any one or more of the following remedies:

I. By written notice to the Funding Agency, with or without terminating this Agreement, declare an amount equal to all amounts then due under this Agreement, and all remaining payments due for which funds have been appropriated, to be immediately due and payable, whereupon the same shall become immediately due and payable;

II. By written notice to the Funding Agency, request the Funding Agency to, at the Funding Agency's expense, promptly return the ECMs to FINANCER in the manner specified in NONAPPROPRIATION OF FUNDS paragraph, or FINANCER, at its option, may enter upon the premises where the ECM is located and take immediate possession of and remove the same, and the Funding Agency hereby expressly waives any damages occasioned by such actions not caused by FINANCER's willful misconduct or negligence;

III. Sell the ECMs and apply any proceeds of such disposition in the following order: (i) all costs incurred in securing possession of the ECMs; (ii) all expenses incurred in completing the disposition; (iii) any sales or transfer taxes; (iv) the applicable payment; and (v) the balance of any payments owed by the Funding Agency for which funds have been appropriated. Any disposition proceeds remaining after the requirements of clauses (i), (ii), (iii), (iv), and (v) have been met shall be paid to the Funding Agency; and

IV. Exercise any other right, remedy, or privilege which may be available to it under applicable laws of the Commonwealth of Pennsylvania, or any other applicable law, or proceed by appropriate court action to enforce the terms of this Agreement, or to recover damages for the breach of this Agreement, or to terminate this Agreement as to any or all of the ECMs. In addition, the Funding Agency will remain liable to the extent not prohibited by law for all covenants under this Agreement and for all fees, other costs, and expenses incurred by FINANCER with respect to the enforcement of any of the remedies listed above or any other remedy available to the FINANCER.

18. EVENTS OF DEFAULT BY FINANCER AND REMEDIES BY COMMONWEALTH

A. If FINANCER fails to make any payment as it becomes due in accordance with the terms of this Agreement, and any such failure continues for sixty (60) days after receipt of written notice of Default, then Commonwealth may pursue any right, remedy, or privilege which may be available to it under applicable laws of the Commonwealth of Pennsylvania, or any other applicable law, or proceed by appropriate court action to enforce the terms of this Agreement or to recover damages for the breach of this Agreement.

19. NOTICES

A. All notices to be given under this Agreement shall be made in writing and mailed by certified mail, return receipt requested, to the other party at its address or at such address as the party may provide in writing from time to time. Any such notice shall be deemed to have been received five (5) days after mailing.

20. NONDISCRIMINATION/SEXUAL HARASSMENT CLAUSE

A. During the term of this Agreement, the Contractor (i.e., FINANCER) agrees as follows:

I. In the hiring of any employee(s) for the manufacture of supplies, performance of work, or any other activity required under the contract or any subcontract, the Contractor, each

subcontractor, or any person acting on behalf of the Contractor or subcontractor shall not discriminate in violation of the Pennsylvania Human Relations Act (PHRA) and applicable federal laws against any citizen of this Commonwealth who is qualified and available to perform the work to which the employment relates.

II. Neither the Contractor nor any subcontractor nor any person on their behalf shall in any manner discriminate in violation of the PHRA and applicable federal laws against or intimidate any employee involved in the manufacture of supplies, the performance of work, or any other activity required under the contract.

III. The Contractor and each subcontractor shall establish and maintain a written nondiscrimination and sexual harassment policy and shall inform their employees of the policy. The policy must contain a provision that sexual harassment will not be tolerated and employees who practice it will be disciplined. Posting this Nondiscrimination/Sexual Harassment clause conspicuously in easily-accessible and well-lighted places customarily frequented by employees and at or near where the contract services are performed shall satisfy this requirement.

IV. The Contractor and each subcontractor shall not discriminate in violation of PHRA and applicable federal laws against any subcontractor or supplier who is qualified to perform the work to which the contract relates.

V. The Contractor and each subcontractor represents that it is presently in compliance with and will maintain compliance with all applicable federal, state, and local laws and regulations relating to nondiscrimination and sexual harassment. The Contractor and each subcontractor further represents that it has filed a Standard Form 100 Employer Information Report ("EEO-1") with the U.S. Equal Employment Opportunity Commission ("EEOC") and shall file an annual EEO-1 report with the EEOC as required for employers subject to Title VII of the Civil Rights Act of 1964, as amended, that have 100 or more employees and employers that have federal government contracts or first-tier subcontracts and have 50 or more employees. The Contractor and each subcontractor shall, upon request and within the time periods requested by the Commonwealth, furnish all necessary employment documents and records, including EEO-1 reports, and permit access to their books, records, and accounts by the contracting agency and the Bureau of Diversity, Inclusion and Small Business Opportunities, for purpose of ascertaining compliance with provisions of this Nondiscrimination/Sexual Harassment Clause.

VI. The contractor shall include the provisions of this Nondiscrimination/Sexual Harassment Clause in every subcontract so that those provisions applicable to subcontractors will be binding upon each subcontractor.

VII. The Contractor's and each subcontractor's obligations pursuant to these provisions are ongoing from and after the effective date of the contract through the termination date thereof. Accordingly, the Contractor and each subcontractor shall have an obligation to inform the Commonwealth if, at any time during the term of the contract, it becomes aware of any actions or occurrences that would result in violation of the provisions.

VIII. The Commonwealth may cancel or terminate the contract and all money due or to become due under the contract may be forfeited for the violation of the terms and conditions of this Nondiscrimination/Sexual Harassment Clause. In addition, the agency may proceed with debarment or suspension and may place the Contractor in the Contractor Responsibility File.

21. CONTRACTOR INTEGRITY PROVISIONS

It is essential that those who seek to contract with the Commonwealth of Pennsylvania ("Commonwealth") observe high standards of honesty and integrity. They must conduct themselves in a manner that fosters public confidence in the integrity of the Commonwealth procurement process.

(a). DEFINITIONS. For purposes of these Contractor Integrity Provisions, the following terms shall have the meanings found in this Section:

1. "Affiliate" means two or more entities where (a) a parent entity owns more than fifty percent of the voting stock of each of the entities; or (b) a common shareholder or group of shareholders owns more than fifty percent of the voting stock of each of the entities; or (c) the entities have a common proprietor or general partner.

2. "Consent" means written permission signed by a duly authorized officer or employee of the Commonwealth, provided that where the material facts have been disclosed, in writing, by prequalification, bid, proposal, or contractual terms, the Commonwealth shall be deemed to have consented by virtue of the execution of this contract.

3. "Contractor" means the individual or entity, that has entered into this contract with the Commonwealth.

4. "Contractor Related Parties" means any affiliates of the Contractor and the Contractor's executive officers, Pennsylvania officers and directors, or owners of 5 percent or more interest in the Contractor.

5. "Financial Interest" means either:

(1) Ownership of more than a five percent interest in any business; or

(2) Holding a position as an officer, director, trustee, partner, employee, or holding any position of management.

6. "Gratuity" means tendering, giving, or providing anything of more than nominal monetary value including, but not limited to, cash, travel, entertainment, gifts, meals, lodging, loans, subscriptions, advances, deposits of money, services, employment, or contracts of any kind. The exceptions set forth in the Governor's Code of Conduct, Executive Order 1980-18, the 4 Pa. Code §7.153(b), shall apply.

7. "Non-bid Basis" means a contract awarded or executed by the Commonwealth with Contractor without seeking bids or proposals from any other potential bidder or offeror.

(b) In furtherance of this policy, Contractor (i.e., FINANCER) agrees to the following:

1. Contractor shall maintain the highest standards of honesty and integrity during the performance of this contract and shall take no action in violation of state of federal laws or regulations or any other applicable laws or regulations or other requirements applicable to Contractor or that govern contracting or procurement with the Commonwealth.

2. Contractor shall establish and implement a written business integrity policy, which includes, at a minimum, the requirements or these provisions as they relate to Contractor activity with the Commonwealth and Commonwealth employees and which is made known to all Contractor employees. Posting these Contractor Integrity Provisions conspicuously in easily-accessible and well-lighted places customarily frequented by employees and at or near where the contract services are performed shall satisfy this requirement.

3. Contractor, its affiliates, agents and employees and anyone in privity with Contractor shall not accept, agree to give, offer, confer, or agree to confer or promise to confer, directly or indirectly, any gratuity or pecuniary benefit to any person, or to influence or attempt to influence any person in violation of any federal or state law, regulation, executive order of the Governor of Pennsylvania, statement of policy, management directive, or any other published standard of the Commonwealth in connection with performance of work under this contract, except as provided in this contract.

4. Contractor shall not have a financial interest in any other contractor, subcontractor, or supplier providing services, labor, or material under this contract, unless the financial interest is disclosed to the Commonwealth in writing and the Commonwealth consents to Contractor's financial interest prior to Commonwealth execution of the contract. Contractor shall disclose the financial interest to the Commonwealth at the time of bid or proposal submission, or if no bids or proposals are solicited, no later than Contractor's submission of the contract signed by Contractor.

5. Contractor certifies to the best of its knowledge and belief that within the last five (5) years Contractor or Contractor Related Parties have not:

i. been indicted or convicted of a crime involving moral turpitude or business honesty or integrity in any jurisdiction;
ii. been suspended, debarred, or otherwise disqualified from entering into any contract with any governmental agency;
iii. had any business license or professional license suspended or revoked;
iv. had any sanction or finding of fact imposed as a result of a judicial or administrative proceeding related to fraud, extortion, bribery, bid rigging, embezzlement, misrepresentation, or anti-trust; and
v. been, and is not currently, the subject of a criminal investigation by any federal, state, or local prosecuting or investigative agency and/or civil anti-trust investigation by any federal, state, or local prosecuting or investigative agency.

If Contractor cannot certify to the above, then it must submit, along with its bid proposal, a written explanation (Exhibit D) of why such certification cannot be made and the Commonwealth will determine whether a contract may be entered into with the Contractor. The Contractor's obligation pursuant to this certification is ongoing from and after the effective date of the contract through the termination date thereof. Accordingly, the Contractor shall have an obligation to immediately notify the Commonwealth in writing if at any time during the term of the contract if becomes aware of any event which would cause the Contractor's certification or explanation to change. Contractor acknowledges that the Commonwealth may, in its sole discretion, terminate the contract for cause if it learns that any of the certifications made herein are currently false due to intervening factual circumstances or were false or should have been known to be false when entering into the contract.

6. Contractor shall comply with the requirements of the Lobbying Disclosure Act (65 Pa.C.S. §13A01 et seq.) regardless of the method of award. If this contract was awarded on a Non-bid Basis, Contractor must also comply with the requirements of the Section 1641 of the Pennsylvania Election Code (25 P.S. §3260a).

7. When Contractor has reason to believe that any breach of ethical standards as set forth in law, the Governor's Code of Conduct, or these Contractor Integrity Provisions has occurred or may occur, including but not limited to contact by a Commonwealth officer or employee which, if acted upon, would violate such ethical standards, Contractor shall immediately notify the Commonwealth contracting officer or the Office of the State Inspector General in writing.

8. Contractor, by submission of its bid or proposal and/or execution of this contract and by the submission of any bills, invoices or requests for payment pursuant to the contract, certifies and represents that it has not violated any of these Contractor Integrity Provisions in connection with the submission of the bid or proposal, during any contract negotiations or during the term of the contract, to include any extensions thereof. Contractor shall immediately notify the Commonwealth in writing of any actions for occurrences that would result in a violation of these Contractor Integrity Provisions. Contractor agrees to reimburse the Commonwealth for the reasonable costs of investigation incurred by the Office of the State Inspector General for investigations of the Contractor's compliance with the terms of this or any other agreement between the Contractor and the Commonwealth that results in the suspension or debarment of the Contractor. Contractor shall not be responsible for investigative costs for investigations that do not result in the Contractor's suspension or debarment.

9. Contractor shall cooperate with the Office of the State Inspector General in its investigation of any alleged Commonwealth agency or employee breach of ethical standards and any alleged Contractor non-compliance with these Contractor Integrity Provisions. Contractor agrees to make identified Contractor employees available for interviews at reasonable times and places. Contractor, upon the inquiry or request of an Inspector General, shall provide, or if appropriate, make promptly available for inspection or copying, any information of any type or form deemed relevant by the Office of the State Inspector General to Contractor's integrity and compliance with these provisions. Such information may include, but shall not be limited to, Contractor's business or financial records, documents or files of any type or form that refer to or concern this contract. Contractor shall incorporate this paragraph in any agreement, contract or subcontract it enters into in the course of the performance of this contract/agreement solely for the purpose of obtaining subcontractor compliance with this provision. The incorporation of this provision in a subcontract shall not create privity of contract between the Commonwealth and any such subcontractor, and no third party beneficiaries shall be created thereby.

10. For violation of any of these Contractor Integrity Provisions, the Commonwealth may terminate this and any other contract with Contractor, claim liquidated damages in an amount equal to the value of anything received in breach of these Provisions, claim damages for all additional costs and expenses incurred in obtaining another contractor to complete performance under this contract, and debar and suspend Contractor from doing business with the Commonwealth. These rights and remedies are cumulative, and the use or non-use of any one shall not preclude the use of all or any other. These rights and remedies are in addition to those the Commonwealth may have under law, statute, regulation, or otherwise.

22. CONTRACTOR RESPONSIBILITY PROVISIONS

For the purpose of these provisions, the term contractor is defined as any person, including, but not limited to, a bidder, offeror, loan recipient, grantee or lessor, who has furnished or performed or seeks to furnish or perform, goods, supplies, services, leased space, construction or other activity, under a contract, grant, lease, purchase order or reimbursement agreement with the Commonwealth of Pennsylvania (Commonwealth). The term contractor includes a permittee, licensee, or any agency, political subdivision, instrumentality, public authority, or other public entity in the Commonwealth.

(a) The Contractor certifies, in writing, for itself and its subcontractors required to be disclosed or approved by the Commonwealth, that as of the date of its execution of this Bid/Contract, that neither the Contractor, nor any such subcontractors, are under suspension or debarment by the Commonwealth or any governmental entity, instrumentality, or authority and, if the Contractor cannot so certify, then it agrees to submit, along with its Bid/Contract, a written explanation of why such certification cannot be made.

(b) The Contractor also certifies, in writing, that as of the date of its execution of this Bid/Contract it has no tax liabilities or other Commonwealth obligations, or has filed a timely administrative or judicial appeal if such liabilities of obligations exist, or is subject to a duly approved deferred payment plan if such liabilities exist.

(c) The Contractor's obligations pursuant to these provisions are ongoing from and after the effective date of the Contract through the termination date thereof. Accordingly, the Contractor shall have an obligation to inform the Commonwealth if, at any time during the term of the Contract, it becomes delinquent in the payment of taxes, or other Commonwealth obligations, or if it or, to the best knowledge of the Contractor, any of its subcontractors are suspended or debarred by the Commonwealth, the federal government, or any other state or governmental entity. Such notification shall be made within 15 days of the date of suspension or debarment.

(d) The failure of the Contractor to notify the Commonwealth of its suspension or debarment by the Commonwealth, any other state, or the federal government shall constitute an event of default of the Contract with the Commonwealth.

(e) The Contractor agrees to reimburse the Commonwealth for the reasonable costs of investigation incurred by the Office of State Inspector General for investigations of the Contractor's compliance with the terms of this or any other agreement between the Contractor and the Commonwealth that results in the suspension or debarment of the contractor. Such costs shall include, but shall not be limited to, salaries of investigators, including overtime; travel and lodging expenses; and expert witness and documentary fees. The Contractor shall not be responsible for investigative costs for investigations that do not result in the Contractor's suspension or debarment.

(f) The Contractor may obtain a current list of suspended and debarred Commonwealth contractors by either searching the Internet at http://www.dgs.pa.gov or contacting:

Department of General Services
Office of Chief Counsel
603 North Office Building
Harrisburg, PA 17125

Telephone No: (717) 787-5599
FAX No. (717) 787-9138

23. AMERICANS WITH DISABILITIES ACT

Pursuant to federal regulations promulgated under the authority of The Americans With Disabilities Act, 28 C.F.R. §35.101 et seq., FINANCER understands and agrees that it shall not cause any individual with a disability to be excluded from participation in this Agreement or from activities provided for under this Agreement on the basis of the disability. As a condition of accepting this Agreement, FINANCER agrees to comply with the "General Prohibitions Against Discrimination", 28 C.F.R. §35.130, and all other regulations promulgated under Title II of The Americans With Disabilities Act which are applicable to all benefits, services programs, and activities provided by the Commonwealth of Pennsylvania through the contracts with outside contractors.

FINANCER shall be responsible for and agrees to indemnify and hold harmless the Commonwealth of Pennsylvania from all losses, damages, expenses, claims, demands, suits, and actions brought by any party against the Commonwealth of Pennsylvania as a result of FINANCER's failure to comply with the provisions of subparagraph above.

24. PARAGRAPH HEADINGS

A. All section headings contained in this Agreement are for the convenience of reference only and are not intended to define or limit the scope of any provision of this Agreement.

25. GOVERNING LAW

A. This Agreement shall be construed in accordance with, and governed by the laws of, the Commonwealth of Pennsylvania.

26. COUNTERPARTS

A. This Agreement may be executed in one or more counterparts, each of which is an original, and all of which together are a single Agreement.

27. DELIVERY OF RELATED DOCUMENTS

A. Commonwealth will execute or provide, as requested by FINANCER, such other documents and information as are reasonable necessary with respect to the transaction contemplated by this Agreement.

B. Commonwealth agrees that, pursuant to Section 149(a) of the Internal "Revenue Code of 1986, as amended (the "Code"), and any temporary and final income tax regulations promulgated thereunder, it shall file the applicable Internal Revenue Service Form 8039G or 8038GC (Information Return for Tax Exempt Governmental Bond Issues). Additionally, Commonwealth, pursuant to Section 149 (a) of the Code, appoints the FINANCER, or any assignee, as "Agent" of the Lessee to keep a record of the assignees who maintain an interest in this Lease. Commonwealth agrees that it shall remit to the Internal Revenue Service any rebates due as provided by the Code.

28. ENTIRE AGREEMENT; WAIVER

A. This Agreement, together with the Request for Bid Proposals for Financing, the FINANCER's Bid Proposal, the GESA Contract, the Payment Schedule, and the documents delivered pursuant to the requirements of paragraph 27 of this Agreement, constitute the entire Agreement between the parties with respect to the financing of the GESA Contract, and this Agreement shall not be modified amended, altered, or changed except with the written consent of the FINANCER and the Commonwealth (the Funding Agency). Any provision of this Agreement found to be prohibited by law shall be ineffective to the extent of such prohibition without invalidating the remainder of this Agreement. The waiver by the FINANCER and the Commonwealth (the Funding Agency) of any breach by the other party of any term, covenant, or condition shall not operate as a waiver of any subsequent breach.

[SIGNATURE PAGE IMMEDIATELY FOLLOWS.]

The parties have caused this contract to be executed on the dates written above.

ATTEST:

_____
Printed Name

_____
Title

_____
Signature *Date*

[FINANCIAL PROVIDER]

_____
Printed Name

_____
Title

_____
Signature *Date*

Federal Identification No. _____
Vender No._____

COMMONWEALTH OF PENNSYLVANIA
Acting through the DEPARTMENT OF CONSERVATION AND NATURAL RESOURCES

ATTEST:

_____
Signature *Date*

_____
Secretary *Date*

APPROVED AS TO FORM AND LEGALITY:

_____
Office of Chief Counsel *Date*

_____
Office of General Counsel *Date*

_____
Office of Attorney General *Date*

_____
Comptroller Operations *Date*

Exhibit A

Guaranteed Energy Savings Contract

Guaranteed Energy Savings Act Contract
Small GESA 4 DCNR Western Region Project

This Guaranteed Energy Savings Act Contract ("GESA Contract") for a Small GESA Project is executed this _____ day of _____, 2018, by and between the Department of Conservation & Natural Resources ("Funding Agency"), an executive agency of the Commonwealth of Pennsylvania authorized to enter into GESA Contracts pursuant to 62 Pa C. S. §§3751-3758, and Energy Systems Group, LLC ("Small GESA Contractor" or "Contractor"), a limited liability company organized under the Laws of the State of Indiana, with its principal offices located at 9877 Eastgate Court, Newburgh, IN 47630.

ARTICLE 1 – CONTRACT DOCUMENTS

1.1 The Contract Documents shall consist of this GESA Contract, the Request for Proposal ("the RFP"), the Contractor's Proposal submitted in response to the RFP, the Contract Bonds, the Conditions of the Contract (General, Special, Supplementary, and other Conditions), all drawings created by or for the Contractor and/or its Retained Professional, the specifications created by or for the Contractor and/or its Retained Professional, the Scope of Work by ECM (**Exhibit 1**), all bulletins and addenda issued prior to execution of this Contract, all change orders, the Administrative Procedures for the Small GESA Contract, the Installment Purchase Agreement and Payment Schedule, and the Energy Audit Report Contract Documents, and the Energy Audit Report. These documents form the Contract and are as fully part of the Contract as if attached to this Contract.

ARTICLE 2 – SCOPE OF WORK

2.1 The Contractor shall perform all the Work required by the Contract Documents as stated in the RFP for the design and implementation/construction of the SM GESA 4 DCNR Western Region Project ("Project").

ARTICLE 3 – TERM

3.1 The term of this Contract shall commence upon the Effective Date of this Contract and shall run for 426 calendar days. The Effective Date of this Contract shall be the date of the last required Commonwealth signature.

3.2 The format and scope of the Work shall be as stated in the RFP and the Energy Audit Report.

3.3 Time is of the essence and if the Contractor fails to complete the Work within the time specified above, the Contractor shall pay the Funding Agency, as Liquidated Damages and not as a penalty for such failure, the sum of One Thousand Five Hundred dollars ($1,500.00) per day for each and every calendar day after the completion date until the Work is completed and accepted. The Funding Agency may extend the completion date of the GESA Contract for causes stated in the General Conditions of the Small GESA Contract ("General Conditions") that, in fact, delay the completion of the Work. In such case, the Contractor is liable for said Liquidated Damages only after the expiration of the extended period.

ARTICLE 4 – CONTRACT SUM

4.1 The Funding Agency will authorize a financing provider, procured separately, to pay the Contractor for the performance of the Work subject to additions and deductions by change order, as provided in the General Conditions, the Contract Sum of **Five Million, Five Hundred Thirty-Three Thousand, Six Hundred Forty-Eight Dollars and 00/100 Cents ($5,533,648.00)**. Payment will be made as stated in the General Conditions. Deductions from, or additions to, this sum will be made as stated in the General Conditions. The Funding Agency is not liable for any debt due to the GESA Contract.

ARTICLE 5 – PROGRESS PAYMENTS AND RETAINAGE

5.1 Based upon Applications for Release of Payment submitted to the Funding Agency by the Contractor, the Funding Agency will authorize the financing provider to release progress payments to the Contractor, in accordance with the provisions of the Prompt Payment Schedules found in the Commonwealth Procurement Code, 62 Pa. C.S. §3931-§3939, and the Administrative Procedures, which are both incorporated by reference and made a part hereof as if those provisions were fully and at length recited, except that, where those provisions refer to the government agency, it is deemed to refer to the Funding Agency. The Funding Agency will retain a portion of the amount due to the Contractor to insure the proper performance of the Contractor in each Application for Release of Payment in accordance with the provisions of Retainage found in the Commonwealth Procurement Code, 62 Pa. C.S. §3921, and the General Conditions, which are both incorporated by reference and made a part hereof as if those provisions were fully and at length recited, except that, where those provisions refer to the government agency, it is deemed to refer to the Funding Agency.

ARTICLE 6 – FINAL PAYMENT

6.1 Final Payment, constituting the entire unpaid balance of the Contract Sum, will be approved by the Funding Agency for release by the financing provider to the Contractor within thirty (30) days after Closeout Inspection of the Work if the Contract has been fully performed and a Final Application for Release of Payment has been submitted, as provided in the General Conditions.

ARTICLE 7 – SMALL DIVERSE BUSINESS PARTICIPATION

7.1 The Contractor provided its Small Diverse Business (i.e., Minority Business Enterprises (MBEs), Women Business Enterprises (WBEs), Veteran Business Enterprises (VBEs), and Service-Disabled Veteran Business Enterprises (SDVBEs) (“Small Diverse Businesses”) percentage for Small Diverse Business Subcontracts, suppliers, and manufacturers for this Project in the its Proposal. The Small GESA Contractor’s Small Diverse Business percentage per ECM is included in **Exhibit 1**.

ARTICLE 8 – MISCELLANEOUS PROVISIONS

8.1 Terms used in this Contract defined in the General Conditions have the meanings designated in those General Conditions.

8.2 In addition to any other guarantees or warrantees, the Contractor covenants and agrees after acceptance of the Work performed under this Contract, to remedy without cost to the Funding Agency, any such defect in the Work, provided said defects in the reasonable judgment of the Funding Agency, or its successors having jurisdiction over the premises, are caused by defective or inferior materials, equipment, or workmanship. If the corrective Work is not completed

within thirty (30) days after the notification by the Funding Agency to the Small GESA Contractor, the Funding Agency may do the Work and submit those costs to the Surety Company for reimbursement.

8.3 The Contract Bonds given by the Contractor conditioned upon the faithful performance of the Contract and for the payment of labor, material, equipment, and public utility service claims are attached to this Contract and are made a part of it. No third party shall acquire any rights against the Funding Agency under the Contract Documents. The Performance Bond does not cover the Assured Performance Guarantee or guaranteed savings under the Contract Documents. However, failure to meet Assured Performance Guarantee or guaranteed savings may be the result of defective or inferior materials, equipment, or workmanship due to the Contractor's failure of faithful performance. Where and when such cases of defective and/or nonconforming work occurs, such defective and/or nonconforming work is covered by the Performance Bond.

8.4 The Contractor agrees to abide by and be bound by the Laws of Pennsylvania, including those relating to and regulating the hours and conditions of employment.

8.5 Nothing in this Contract shall be deemed to waive or otherwise affect the sovereign immunity of the Commonwealth and its agencies, officers, and employees, or to subject any Commonwealth party to any liability not expressly authorized by law.

8.6 Any person, co-partnership, association, or corporation furnishing labor, material, equipment or renting equipment, or rendering public utility services in connection with the performance of this Small GESA Contract, has a right of action to recover the cost from the Contractor and the Surety on the Bond given to secure the payment of such labor, material, equipment, or equipment rental and services rendered by public utility as though such person or corporation had been named as Obligee in the Bond. For those who do not have a Contract directly with the Contractor, this right of action may not be exercised unless the Contractor is notified of the claim within ninety (90) days from the last performance of labor or provision of materials. The Contractor shall include in all of its Subcontracts or supply Contracts a provision requiring that its Subcontractors and Suppliers notify, in writing, their Subcontractors and Suppliers of this requirement. It is agreed that no third-party rights arise against the Funding Agency for any reason under this Article, and the Contractor agrees to inform all Subcontractors and Suppliers in writing.

8.7 This Contract may be executed in one or counterparts, each of which is an original, and all of which together are a single Contract.

ARTICLE 9 – CONTRACT COMPLIANCE REGULATIONS

9.1 Refer to the appropriate paragraph of the General Conditions (which are made a part of this Contract by incorporation by reference), which prohibits discrimination in hiring or employment opportunities. Also made a part of this Contract by incorporation by reference are all State and Federal Laws prohibiting discrimination in hiring or employment opportunities. The Contract Documents also list applicable statutory provisions, which are incorporated by reference into this Small GESA Contract.

ARTICLE 10 – ASSURED PERFORMANCE GUARANTEE

10.1 The Contractor is required to guarantee energy and cost savings stipulated in this Contract on an annual basis. The savings must be guaranteed to equal or exceed the Project financing payment, plus the service fees during that year for the Contract duration. No credit for savings above the annual guarantee will be credited toward the performance guarantees for future years of this Contract. The recovery of Contract costs from energy savings over the term of this Contract shall not exceed **twenty (20) years**. Refer to the Assured Performance Guarantee (which is made a part of this Contract by incorporation) for the Contractor's requirements regarding documenting and verifying the annual energy and/or cost savings that are attributed to this Project **(Exhibit 2)**.

[SIGNATURE PAGE IMMEDIATELY FOLLOWS.]

The parties have caused this contract to be executed on the dates written above.

ATTEST:

_____

Secretary/Treasurer *Date*

ENERGY SYSTEMS GROUP, LLC

_____

Gregory F. Collins, President *Date*

COMMONWEALTH OF PENNSYLVANIA ACTING THROUGH THE DEPARTMENT OF CONSERVATION & NATURAL RESOURCES

ATTEST:

_____

Date

_____

Secretary *Date*

I hereby certify that funds in the amount of $_____
Are available under Appropriation Symbol
_____
Comptroller Operations *Date*
(Comptroller Operations execution may be by electronic signature and does not imply verification of funds)

APPROVED AS FORM AND LEGALITY

_____

Office of Chief Counsel *Date*
Department of Conservation & Natural Resources

_____

Office of General Counsel *Date*

_____

Office of Attorney General *Date*

CONTRACT BOND

KNOW ALL PERSONS BY THESE PRESENTS, That we the undersigned

_____

_____

_____

as Principal and

_____

_____

_____

as the Surety Company, a Corporation organized and existing under the Laws of the State of _____ and authorized to transact business in Pennsylvania, as surety, are held and firmly bound unto the Department of Conservation & Natural Resources ("Funding Agency"), as hereinafter set forth, in the full and just several sums of:

(A)_____Dollars

($_____) for faithful performance of the Small GESA Contract as designated in Paragraph "A" below; and

(B)_____Dollars

($_____) for payment for labor, material equipment rental and public utility services as designated in Paragraph "B" below; and

Sealed with our respective seals and dates this _____ day of _____.

WHEREAS, the above Principal has entered into a Small GESA Contract with the Department of Conservation & Natural Resources dated the _____ day of _____, 20__ for _____upon certain terms and conditions in said Small GESA Contract more particularly mentioned; and

WHEREAS, it is one of the conditions of the Award pursuant to which said Small GESA Contract is about to be entered into, that these presents be executed;

NOW, THEREFORE, the joint and several conditions of this obligation are such:

A. That, if the above Principal as Small GESA Contractor shall well and faithfully do and perform the things agreed by it to be done and performed according to the terms of said Contract Documents, including the plans and specifications therein referred to and made part thereof, and such alterations as may be made in said plans and specifications as therein provided and which are hereby made part of this Bond the same as though they were fully set forth herein, and shall indemnify and save harmless the Department of Conservation & Natural Resources and all of their officers, agent and employees from any expense incurred through the failure of said Small GESA Contractor to complete the Work as specified and for any damages growing out of the manner of performance of said Small GESA Contract by said Small GESA Contractor or its Subcontractors, or their agents or servants, including, but not limited to, patent trademark and copyright infringements, then this part of this obligation shall be void; otherwise, it shall be and remain in full force and effect.

B. That, if the above Principal shall and will promptly pay or cause to be paid all sums of money which may be due by the Principal or any of its Subcontractors to any person, co-partnership, association or corporation for all material furnished and labor supplied or performed in the prosecution of the work, whether or not the said material or labor entered into and become component parts of the Work or improvements contemplated, and for rental of equipment used, and services rendered by public utilities in, or in connection with, the prosecution of such Work, then this part of this obligation shall be void; otherwise, it shall be and remain in full force and effect.

C. It is further agreed that any alterations which may be made in the terms of the Small GESA Contract or in the Work to be done or materials to be furnished or labor to be supplied or performed, or equipment to be rented, or public utility services to be rendered, or the giving by the Funding Agency of any extension of time for the performance of the Small GESA Contract, or the reduction of the retained percentage as permitted by the Small GESA Contract, or any other forbearance on the part of either the Funding Agency or the Principal to the other, shall not in any way release the Principal and the surety or sureties or either or any of them, their heirs, executors, administrators,

successors or assigns, from their liability hereunder; notice to the surety or sureties of any such alterations, extension or forbearance being hereby waived.

D. The Principal and Surety hereby jointly and severally agree with the Funding Agency herein that every person, co-partnership, association or corporation which, whether as subcontractor as a person otherwise entitled to the benefits of this Bond, has furnished material or supplied or performed labor or rented equipment used in the prosecution of the Work as above provided and any public utility, which has rendered services, in, or in connection with, the prosecution of such Work, and, which has not been paid in full therefore, may sue in assumpsit on this Bond in his, their, or its name and prosecute the same to final judgment for such sum or sums as may be justly due him, them, or its, and have execution thereon; provided, however, that the Funding Agency shall not be liable for the payment of any cost or expenses of such suit to a third party under any theory of law or equity.

E. Recovery by any persons, co-partnership, association or corporation hereunder is subject to the provisions of the Pennsylvania Procurement Code, 62 Pa. C.S §§101-4509, as amended, which Act is incorporated herein and made a part hereof, as fully and completely as though its provisions were fully and at length herein recited, except that, where said Act refers to the Commonwealth of Pennsylvania or a Department thereof, it is deemed to refer to the Funding Agency.

IN WITNESS WHEREOF, the said Principal and Surety have duly executed this Bond under seal the day and year above written.

Witness:

_____ _____

(Date) Principal (Date)
Energy Systems Group, LLC

(Corporate Seal) _____

Surety

By:_____
Attorney-in-Fact (Date)

APPROVED AS TO FORM AND LEGALITY

_____ _____

Office of Chief Counsel Office of Attorney General
Department of Conservation & Natural Resources

_____
Office of General Counsel, DGS

EXHIBIT 1

Scope of Work by ECM
Including
Small Diverse Business Participation

Project Scope

Listed in the table below are the three Base Project Energy Conservation Measures (ECMs) (Lighting, Building Envelope and Water Conservation), as well as, the additional DCNR "Wish List" ECMs which DCNR wanted to include in the project:

DCNR GESA PROJECT ENERGY CONSERVATION MEASURES

Base Project		
#	**ECM**	**ECM Description**
1	Lighting Improvements - LED Upgrades	Upgrade existing light fixtures to LED - Replace linear fluorescent with linear LED - Replace incandescent with LED - Replace compact fluorescent with LED
2	Building Weatherization and Insulation Improvements	Weatherization - Replace weather-stripping on doors and windows in select buildings at 24 Parks Building insulation - Add or replace attic and wall insulation in select buildings at 14 Parks Mechanical insulation - Replace or add insulation on piping and ductwork in select buildings at 13 Parks
3	Water Conservation	Install water conserving fixtures at Presque Isle State Park and Point State Park
Tom Ridge Environmental Center		
#	**ECM**	**ECM Description**
TREC- 1	Correct Excessive Air Pressure in Tower	Install static pressure differential sensor to monitor the static pressure of Observation Tower in relation to main building and modify control sequences to stage exhaust fans as needed for temperature control. In addition, install one (1) new 2-way control valve on unit heaters to control heating of the observation tower.
TREC- 2	Replace Failed Fan Powered Boxes	Replace fifty-one (51) under-floor fan powered Variable Air Volume boxes.
TREC- 3	Adding individual Private Temperature Controls	In select areas where multiple individual offices are conditioned by 1 Variable Air Volume Box, add thermostats to each office for better control of the VAV. Total of fifteen (15) new thermostats.
TREC- 4	Relocate Thermostats Located on Outside Walls	Remove thermostats located on exterior walls and install seven (7) wireless thermostats.
TREC-7A	Replace Exterior Air Handling Unit-AHU 3 Only	Replace AHU 3 - 40 Ton Capacity - Replace Remote Condenser - Reuse existing fan which appears in good working order. - Modify ductwork as needed to accommodate design of new unit
TREC-7B	Replace Heat Recovery Wheels on AHU 1 and 2	Replace Heat Recovery Wheels on AHUs 1 and 2.
REC-8	Implement Occupied/Unoccupied Temperature Control	Implement and optimize AHU control schedule for AHUs 1 and 2.

Tom Ridge Environmental Center		
#	**ECM**	**ECM Description**
TREC-9A	Replace Failed Water Heater	Replace water heater that has a burned out heat exchanger and correct exhaust vent issues
TREC-10	Install VFD on Pumps	Add Variable Frequency Drives to two (2) 10 HP hot water pumps and install differential pressure sensor for control.
Presque Isle State Park		
#	**ECM**	**ECM Description**
PISP-3	Replace Unit Heaters and Install New Radiant Tube Heating System In Maintenance Building	Replace two (2) existing unit heaters with infrared heaters.
Forbes Forest District		
#	**ECM**	**ECM Description**
FFD-1	Install New Programmable Thermostats	Install new programmable thermostats in Park office for 5 HVAC units. The thermostats will control forced air and baseboard heat.
FFD-2	Replace Boiler	Pondfield Maintenance Building - Replace existing boiler with new 133,000 MBH boiler - Install new exhaust to correct code issues
FFD-3	Replace Existing Furnace and Install New Unit Heater	Mt. Davis Maintenance Building - Replace existing oil fired furnace with new unit for office and shop area - Install new exhaust to correct code issues - Install new oil fired unit heaters in garage
Cornplanter Forest District		
#	**ECM**	**ECM Description**
CFD-1	Replace Boiler in Office	- Replace existing boiler - Install new exhaust to correct code issues
Point State Park		
#	**ECM**	**ECM Description**
PSP-1	Replace Upward Lighting in the Portal Bridge to LED	Replace upward lighting in the Portal Bridge to LED
PSP-2	Remove the Four (4) 1000 Watt Metal Halide Lights and Retrofit with LED fixtures at Bath and Pump House	Remove the four (4) 1000 Watt metal halide lights and retrofit with LED fixtures at Bath and Pump House
PSP-3	Remove Eighteen (18) Center Column 1000 Watt Halogen Lamps and Retrofit them with LED Lamps	Remove eighteen (18) center column 1000 Watt halogen lamps and retrofit them with LED lamps

Moraine State Park		
#	**ECM**	**ECM Description**
MSP-1	Install Remote Heating Control for 11 Modern Cabins	Install WiFi Enabled Programmable Thermostats on all electric baseboard heaters in eleven (11) Modern Cabins.
MSP-2	Replace Oil Furnace at Park Office	- Replace existing furnace - Install new exhaust to correct code issues
MSP-3	Replace Doors and Windows at two Maintenance Buildings	Replace doors and windows at two (2) maintenance buildings
MSP-4	Install Instantaneous Hot Water Heaters at Modern Cabins	Replace existing storage style hot water heaters in eleven (11) Modern Cabins with instantaneous water heaters.
Pymatuning State Park		
#	**ECM**	**ECM Description**
PYSP-1	Replace Oil Boiler with Propane Boiler at Jamestown Maintenance	- Remove existing boiler - Install concrete pad and piping for new propane tank location - Install new boiler in new location and connect piping to existing systems - Install new exhaust stack - Install new propane fired infrared heaters in garage bays
PYSP-2	Replace Oil Boiler with Propane Boiler at Park Office	- Remove existing boiler - Install concrete pad and piping for new propane tank location - Install new boiler in new location and connect piping to existing systems - Install new exhaust stack

[Remainder of this page left intentionally blank]

Submit 1 original in a sealed envelope separate from the Technical Submission and the ECM/Cost Submission

After examination of the contract documents, which are made a part hereof as if fully set forth herein, the Proposer commits to the following percentage for Small Diverse Business participation on this project. The Proposer understands the language in the RFP regarding the calculation of the percentage.

Project: Small GESA Project #4 DCNR

Proposer (Firm) Name

Energy Systems Group

Commitment for Small Diverse Businesses for each ECM
(FILL IN)

ECM	Dollar Value of ECM	% SDB Commitment	Dollar Value SDB Commitment
			($ Value of ECM x % Commitment)
1	$2,371,026	62%	$1,470,158.00
2	$715,062	62%	$443,375.45
3	$19,166	62%	$11,884.00
TREC-1	$18,292	62%	$11,342.00
TREC-2	$289,911	62%	$179,760.00
TREC-3	$13,132	62%	$8,142.70
TREC-4	$9,086	62%	$5,633.55
TREC-7A	$859,380	62%	$532,860.00
TREC-7B	$118,639	62%	$73,562.50
TREC-8	$6,212	62%	$3,852.00
TREC-9A	$51,597	62%	$31,993.00
TREC-10	$58,673	62%	$36,380.00
PISP-3	$184,958	62%	$114,683.67
FFD-1	$9,491	62%	$5,885.00
FFD-2	$76,965	62%	$47,722.00
FFD-3	$67,646	62%	$41,944.00
CFD-1	$82,832	62%	$51,360.00
PSP-1	$4,743	62%	$2,941.00
PSP-2	$7,777	62%	$4,822.00
PSP-3	$14,515	62%	$9,000.00
MSP-1	$82,832	62%	$51,360.00
MSP-2	$86,111	62%	$53,393.00
MSP-3	$45,847	62%	$28,427.80
MSP-4	$59,366	62%	$36,810.14
PYSP-1	$184,958	62%	$114,683.67
PYSP-2	$95,429	62%	$59,171.00
TOTAL	**$5,533,648**		**$3,431,146.48**

Proposer's SDB % = 100 x Total Dollar Value SDB Commitment / Total Dolar Value of ECMs

62 % (Figure) SIXTY TWO (Written) Percent

EXHIBIT 2

ASSURED PERFORMANCE GUARANTEE
For
SMALL GESA CONTRACT

PART 1

1-1. DEFINITIONS
For purposes of this Agreement, the following terms have the meanings set forth below:

Annual Project Benefits are the portion of the projected Total Project Benefits to be achieved in any one year of the Guarantee Term.

Annual Project Benefits Realized are the Project Benefits actually realized for any one year of the Guarantee Term.

Annual Project Benefits Shortfall is the amount by which the Annual Project Benefits exceed the Annual Project Benefits Realized in any one year of the Guarantee Term.

Annual Project Benefits Surplus is the amount by which the Annual Project Benefits Realized exceed the Annual Project Benefits in any one year of the Guarantee Term.

Baseline is the mutually agreed upon data and/or usage amounts that reflect conditions prior to the installation of the Energy Conservation Measures.

Guarantee Term will commence on the first day of the month following the Final Payment date and will continue through the duration of the M&V Services.

Installation Period is the period beginning on the effective date of the Small GESA Contract and ending on the commencement of the Guarantee Term.

Measured Project Benefits are the utility savings and cost avoidance calculated in accordance with the methodologies set forth in Part 2 of this Agreement.

Project Benefits are the Measured Project Benefits to be achieved for a particular period during the term of this Agreement.

O&M Benefits are the operations and maintenance cost avoidance savings as stipulated in Part 2 of this Agreement.

Rebate Project Benefits are the energy rebate or incentive non-recurring savings as stipulated in Part 2 of this Agreement.

Total Project Benefits are the projected Project Benefits to be achieved during the entire term of this Agreement.

1-2. SCOPE

A. The Funding Agency is contracting for a full range of energy services and energy-related capital

improvements at no initial capital cost for the Project. The ECMs may include but are not limited to: the design, acquisition, installation, modification, maintenance and training of funding agency personnel in the operation of existing and new equipment. The ECMs will reduce energy consumption and related costs associated with the heating, ventilation and air conditioning system, lighting systems, control systems, building envelope, the hot water systems, water consumption, sewage costs and other energy using devices. Additionally, savings which will not reduce consumption but are aimed at cost savings, such as fuel switching, demand side management, on-site generation, utility bill auditing, utility rate changes, and distribution upgrades etc. have been considered. ECMs may also include the training of facility staff with respect to routine maintenance and operation of all improvements. ECMs must result in a guaranteed minimum energy savings with payments linked to actual documented energy and cost reductions.

B. Any stipulated energy and/or operational cost savings that are attributed to this project have been rigorously reviewed and the Small GESA Contractor is required by this contract to thoroughly document and verify the savings, which have been approved by DGS and the Funding Agency. The Annual Project Benefits Realized by the ECMs in any year must be guaranteed to equal or exceed the Annual Project Benefits during that year for the duration of the contract. The Small GESA Contractor is required to guarantee energy and cost savings on an annual basis. No credit for the achievement of savings above and beyond the annual guarantee will be credited to satisfy performance guarantees in future years of the contract. Annual reconciliation of the achieved savings will be required.

1-3. MEASUREMENT & VERIFICATION

A. Measurement & Verification (M&V) services shall commence on the first day of the month following the month in which the Funding Agency releases the Final Payment to the Small GESA Contractor and shall continue throughout the Assured Performance Guarantee Term, subject to earlier termination of the Assured Performance Guarantee as provided herein. The Small GESA Contractor shall ensure that an approved representative from the Funding Agency is physically present for all pre-retrofit and post-retrofit measurements for each ECM as applicable to the Energy Savings Guarantee unless the Funding Agency waives their right to be present. The final completion date shall be the date when all Work is completed, including all punch list items, as evidenced by the release of the Final Payment by the Funding Agency. In the event the Funding Agency (i) cancels or terminates receipt of M&V Services, (ii) fails to fulfill any of Funding Agency responsibilities necessary to enable Small GESA Contractor to complete the Work and provide the M&V Services, or (iii) otherwise cancels, terminates or materially breaches this Agreement, Small GESA Contractor shall issue a written notice to the Funding Agency stating the nature of the alleged breach, the date upon which it arose, and the remedy sought. Small GESA Contractor shall provide the Funding Agency with a thirty (30) day period to cure such breach. In the event of a dispute, all parties shall act in good faith to mitigate damages with a reservation of rights as to damages.

B. If the Small GESA Contractor is delayed in the commencement, performance, or completion of the M&V Services by causes beyond its control and without its fault, including but not limited to inability to access property; concealed or unknown conditions encountered at the project, differing from the conditions represented by Funding Agency in the proposal documents or otherwise disclosed by Funding Agency to the Small GESA Contractor; a Force Majeure condition; failure by Funding Agency to perform its obligations under this Small GESA Contract; or failure by Funding Agency to reasonably cooperate with Small GESA Contractor in the timely completion of the M&V Work where such failure is material, substantial and inconsistent with the terms of

this Small GESA Contract, Small GESA Contractor shall provide written notice to Funding Agency of the existence, extent of, and reason for such delays and impacts. Under such circumstances, an equitable adjustment in the time for performance and the Assured Performance Guarantee shall be made, subject to the mutual written agreement of the parties.

C. Funding Agency shall provide Small GESA Contractor, its subcontractors, and its agents reasonable and safe access to all facilities and properties in Funding Agency's control that are subject to the M&V Services. Work to be performed by Small GESA Contractor in accordance with this Small GESA Contract shall be performed during normally scheduled staff shifts and as agreed to by both parties. Funding Agency further agrees to assist Small GESA Contractor, its subcontractors, and its agents to gain access to facilities and properties that are not controlled by Funding Agency but are necessary for Small GESA Contractor to provide the M&V Services. An equitable adjustment in the time for performance and Assured Performance Guarantee shall be made as a result of any failure to grant such access, subject to the mutual written agreement of the parties.

D. In order for Small GESA Contractor to perform its obligations under this Agreement with respect to the Work, the Assured Performance Guarantee, and the M&V Services, Funding Agency shall be responsible for:

1. Providing Small GESA Contractor, its subcontractors, and its agents reasonable and safe access to all facilities and properties that are subject to the Work and/or M&V Services;

2. Properly maintaining, and performing appropriate preventative maintenance on, all equipment and building systems affecting the Assured Performance Guarantee in accordance with manufacturers' standards and specifications;

3. Providing the utility bills, reports, and similar information reasonably necessary for administering Small GESA Contractor's obligations under the Assured Performance Guarantee within thirty (30) days of Funding Agency receipt and/or generation or Small GESA Contractor's request therefore;

4. Providing all records relating to energy and/or water usage and related maintenance of the premises and relevant equipment requested by Small GESA Contractor; and

5. Promptly notifying Small GESA Contractor of any change in use or condition or any other matter that may impact the Assured Performance Guarantee.

[Remainder of this page left intentionally blank]

PART 2
PROJECT BENEFITS

2-1. PROJECT BENEFITS SUMMARY

A. Subject to the terms and conditions of this GESA Contract, GESA Contractor and Funding Agency agree that, upon Final Completion, Funding Agency will be deemed to achieve a total of **$686,624** in annual increments as shown in the Maintenance Material Savings column of the Total Project Benefits table below. GESA Contractor guarantees that Funding Agency will achieve a total of **$6,817,023** in Total Annual Energy Savings during the term of this Assured Performance Guarantee, for Total Project Benefits of **$7,503,647** as set forth in the Total Project Benefits table below.

Table A. Total Project Benefits

ANNUAL SAVINGS				
Period	Option A and Modified Option A Energy Savings	Agreed-Upon Energy Savings	Agreed-Upon Operational and Maintenance Savings	Total
Construction	$ -	$ 151,362	$ -	$ 151,362
1	$ 215,661	$ 87,062	$ 31,183	$ 333,906
2	$ 217,818	$ 87,933	$ 31,495	$ 337,245
3	$ 219,996	$ 88,812	$ 31,810	$ 340,618
4	$ 222,196	$ 89,700	$ 32,128	$ 344,024
5	$ 224,418	$ 90,597	$ 32,449	$ 347,464
6	$ 226,662	$ 91,503	$ 32,774	$ 350,939
7	$ 228,929	$ 92,418	$ 33,102	$ 354,448
8	$ 231,218	$ 93,342	$ 33,433	$ 357,993
9	$ 233,530	$ 94,276	$ 33,767	$ 361,573
10	$ 235,865	$ 95,218	$ 34,105	$ 365,188
11	$ 238,224	$ 96,171	$ 34,446	$ 368,840
12	$ 240,606	$ 97,132	$ 34,790	$ 372,529
13	$ 243,012	$ 98,104	$ 35,138	$ 376,254
14	$ 245,443	$ 99,085	$ 35,489	$ 380,017
15	$ 247,897	$ 100,075	$ 35,844	$ 383,817
16	$ 250,376	$ 101,076	$ 36,203	$ 387,655
17	$ 252,880	$ 102,087	$ 36,565	$ 391,531
18	$ 255,408	$ 103,108	$ 36,930	$ 395,447
19	$ 257,963	$ 104,139	$ 37,300	$ 399,401
20	$ 260,542	$ 105,180	$ 37,673	$ 403,395
TOTAL TERM	**$ 4,748,644**	**$ 2,068,380**	**$ 686,624**	**$ 7,503,647**

The energy cost savings provided in **Table A** above are based on the annual escalation stated in **Table A-1** below, and will be applied to the unit utility rates listed in **Table B** beginning the first month following the baseline period, escalating annually throughout the Guarantee Period.

Table A-1 – Annual Escalation Rates

Energy Cost Esc./yr	**1.0%**
Labor Cost Esc./yr	**3.0%**
Maintenance Cost Esc	**1.0%**

The actual escalation of calculated savings that will be applied in the M&V Report will be the highest of:

(1) **Table A-1** above
(2) CPI (Consumer Price Index) for the geographical region, or
(3) Actual fuel rate

B. Within thirty (30) days of the commencement of the Guarantee Term, Small GESA Contractor will calculate the Measured Project Benefits achieved during the Installation Period and provide the Funding Agency of written confirmation of the calculations.

C. Within thirty (30) days of each anniversary of the commencement of the Guarantee Term, Small GESA Contractor will calculate the Measured Project Benefits achieved for the applicable year applicable to such period and provide both DGS and the Funding Agency with an annual report containing:

1. an executive overview of the project's performance and Project Benefits achieved to date; and
2. a summary analysis of the Measured Project Benefits accounting; and
3. a detailed analysis of the Measured Project Benefits calculations.

D. Funding Agency acknowledges and agrees that if, for any reason, it (i) cancels or terminates receipt of M&V Services, (ii) fails to pay for M&V Services, (iii) fails to fulfill any of its responsibilities necessary to enable Small GESA Contractor to complete the Work and provide the M&V Services, or (iv) otherwise cancels, terminates or materially breaches this Small GESA Contract, the Assured Performance Guarantee shall automatically terminate and Small GESA Contractor shall have no liability hereunder.

2-2. PROJECT SAVINGS SHORTFALLS OR SURPLUSES

A. Guaranteed Savings Shortfalls: If an Annual Project Benefit Shortfall occurs for any year of the Assured Performance Guarantee Term, Small GESA Contractor shall, at the sole discretion of the Funding Agency, perform one or more of the following:

1. pay to Funding Agency the amount of such shortfall, or
2. subject to Funding Agency's written approval, provide to Funding Agency additional products or services, in the value of such shortfall, at no additional cost to Funding Agency.

B. Guaranteed Savings Surpluses: If an Annual Project Benefit Surplus occurs for any year of the Guarantee Term, Small GESA Contractor may not apply the amount of such surplus to set off any subsequent Annual Project Benefit Shortfall during the Guarantee Term.

C. Additional Energy Conservations. Where an Annual Project Benefits Shortfall has occurred, Small GESA Contractor may, subject to Funding Agency approval, implement additional Energy Conservation

Measures, at no cost to Funding Agency, which may generate additional Project Benefits in future years of the Guarantee Term. Such improvements do not relieve the Small GESA Contractor from liability set forth in Paragraph 2-2(A).

D. Event of Default by Small GESA Contractor: If an Annual Project Benefits Shortfall has occurred and the GESA Contractor does not comply with Paragraph 2-2(A), the Funding Agency may deem this to be an Event of Default. If default occurs, the Funding Agency may place the GESA Contractor in the Contractor Responsibility Program and also pursue debarment or suspension in accordance with the Commonwealth Procurement Code.

PART 3

MEASUREMENT AND VERIFICATION METHODOLOGY

3-1. MEASUREMENT & VERIFICATION PROTOCOL

A. Small GESA Contractor shall apply either Option A or Option B or Option C verification methodologies, as more fully detailed in the guidelines and standards of the International Measurement and Verification Protocol (IPMVP) and/or the Federal Energy Management Program (FEMP), or modified variations as outlined below, in connection with the provision of M&V Services hereunder. The applicable option shall be as set forth in the Project-Specific Request for Proposal submitted to and accepted by DGS and the Funding Agency.

B. Option A

The verification techniques for Option A for electrical savings, "Retrofit Isolation: Key Parameter Measurement" savings are determined by partial field measurement of the energy use of the system(s) to which an ECM was applied, separated from the energy use of the rest of the facility. Measurement may be either short term or "continuous". In this approach, some but not all parameters may be stipulated fairly to represent the probable actual value. This approach is the least expensive with acceptable accuracy.

Option A, Retrofit Isolation: Key Parameter Measurement includes procedures for verifying that:

- ❒ Baseline conditions are properly defined
- ❒ Equipment and/or systems contracted to be installed have been installed
- ❒ Installed equipment/systems meet specifications
- ❒ Pre and post measurement of kW for lighting
- ❒ Installed equipment is operating and fully functional
- ❒ Installed equipment continues to operate as planned throughout the term of the contract

Option A will be used in the verification of the Electrical and Fuel Savings for this contract. The verification of savings will be done by utilizing a one-time pre and post measurement, agreed upon hours of operation, manufacturer's data and engineering calculations. The savings will be carried through the Guarantee Years (2 through 20), escalating annually as listed in Table- A-1 "Annual Escalation Rates". The calculations for savings are as follows:

Lighting Upgrades (including Interior, Exterior and Lighting Controls)- ESG will take one-time watt readings on sample fixtures before and after upgrade to insure savings. Hours of operations for the facilities were stipulated based on lighting logger data and are agreed upon. Savings calculations will be reviewed and accepted by both parties and will be validated as required. The methodology, inputs and assumptions presented for the lighting retrofit savings calculations are stipulated for the contract term. The calculations for lighting are as follows:

*Kilowatt hours (kWh) Saved = Total Kilowatts Saved * Hours per Year*

*$ Saved = Kilowatt hours Saved * utility unit cost*

Baseline and post-retrofit wattage values for various lighting fixtures are presented in Appendix "Lighting Line by Line". The methodology, inputs and assumptions presented for the lighting retrofit savings calculations are stipulated for the contract term.

C. Modified Option A

The verification techniques for Modified Option A for savings are determined by partial field measurement of the energy use of the system(s) OR manufacturer certified efficiency ratings to which an ECM was applied, separated from the energy use of the rest of the facility. In this approach, some but not all parameters may be stipulated fairly to represent the probable actual value. This approach is the least expensive with acceptable accuracy.

Modified Option A, includes procedures for verifying that:

- ❒ Baseline conditions are properly defined
- ❒ Equipment and/or systems contracted to be installed have been installed
- ❒ Installed equipment/systems meet specifications
- ❒ Installed equipment is operating and fully functional
- ❒ Installed equipment continues to operate as planned throughout the term of the contract

Modified Option A Savings – Boiler Replacement

Baseline energy consumption based on collected field data and combustion efficiency of existing boilers. Post installation energy consumption based on combustion efficiency of new boilers.

Pre M&V: Energy Systems Group will take a combustion efficiency test to verify the efficiency of existing boilers and estimate the fuel consumption of existing boilers based on collected field data and utility bills.

Post M&V: Energy Systems Group will take a combustion efficiency test to verify the efficiency of new boilers.

Efficiency Upgrade Heating Fuel Savings: Savings for the new boilers will be determined using the base heating load and the difference in efficiencies between the existing burners and new burners.

Efficiency Upgrade Heating Fuel Savings = Existing Baseline Fuel Usage x (Measured

Existing burners efficiency- New burners efficiency)

Efficiency Upgrade Savings Dollars = Efficiency Upgrade Heating Fuels Savings x Avoided Base Fuel Cost (escalated according to Table C).

The Efficiency Upgrade Savings Dollars equation captures the dollars saved as DCNR is no longer purchasing this quantity of fuel oil.

Modified Option A Savings – AHU Replacement

Baseline energy consumption based on collected field data and equipment efficiency rating of the existing AHU. Post installation energy consumption based on equipment efficiency rating of the existing AHU

Pre M&V: Energy Systems Group will take a Full Load KW reading of the compressors and the temperature difference across the DX coil for the new AHU

Post M&V: Energy Systems Group will take a Full Load KW reading of the compressors and the temperature difference across the DX coil for the new AHU.

Efficiency Upgrade Savings: Savings for the new boilers will be determined using the base heating load and the difference in efficiencies between the AHU and new AHU.

Energy Savings = Pre-retrofit energy use – Post-retrofit energy use

Pre-retrofit energy use = Heating/Cooling energy use of building / efficiency of existing unit

Post-retrofit energy use = Heating/Cooling energy use of building / efficiency of proposed unit

$ Saved = Energy Savings x cost per energy unit escalated annually according to Table C or current Cost per Energy unit, whichever is higher

Modified Option A Savings – VFD

Baseline energy consumption based on collected field data and measured Motor KW. Post installation energy consumption based on measured Motor KW.

Pre M&V: Energy Systems Group will take a Full Load KW reading of the motor prior to VFD installation.

Post M&V: Energy Systems Group will take a Full Load KW reading of the motor after to VFD installation.

Efficiency Upgrade Savings: Savings for the new boilers will be determined using the base heating load and the difference in existing motor KW and new Motor with VFD.

Energy Savings = Pre-retrofit energy use – Post-retrofit energy use

Pre-retrofit energy use = Electric power (kW) x load fraction x time of use (h) Post-retrofit

energy use = Electric power (kW) x load fraction x time of use (h)

$ Saved = Energy Savings x cost per energy unit escalated annually according to Table C or current Cost per Energy unit, whichever is higher.

Modified Option A Thermal Savings – Lavatory Sink Aerators (Thermal Savings Only)

Higher heat loss from higher water flow can be reduced through lowering the water flow through water fixtures ESG will document the completed scope to verify the areas water fixtures are installed. The governing concept for calculating the energy savings for this measure is outlined below:

Efficiency Upgrade Heating Fuel Savings = heat loss/gain x flow x time of use / system efficiency

Efficiency Upgrade Savings Dollars =Efficiency Upgrade Heating Fuel Savings x Avoided Base Fuel Cost escalated annually according to Table C or current Cost per Energy unit, whichever is higher. The Efficiency Upgrade Savings Dollars equation captures the dollars saved as DCNR is no longer purchasing this quantity of fuel oil.

Agreed Upon Energy Savings:

The verification techniques for Agreed Upon Energy Savings by providing documentation that verifies the sequence of operation and/or efficiency of a system before and after the retrofit, and multiplying the difference by agreed upon or “calculated” factors. The Guarantee Year Period will utilize manufacturer data for existing equipment as well as for new equipment and use calculated baseline utility use to determine savings. Changes in equipment parameters such as equipment efficiency, equipment run time, and changes in insulation, based on existing and post installation conditions will

be used to determine the savings. The Pre and Post installation changes will be used in the calculations to determine the first year savings. The savings will then be escalated over the course of the guarantee term in accordance with the Section A, Table A-1 of this M&V Plan.

The table below outlines the source of the Agreed Upon Energy Savings as reduction to the accepted electric baseline adjustment. Upon final acceptance of the project all values presented in this Table will also be accepted as the final savings values for year requiring no further verification or reporting. These savings will escalate annually as outlined in Section 2.1

Table B – Agreed Upon Energy Savings

Agreed Upon Energy Savings		
ECMs	Description	Annual Savings
TREC-1, TREC-3, TREC-4, TREC-9, FFD-1, MSP-1	Control Upgrades	$ 5,388
2, MSP-3	Building Weatherization	$ 81,673

Agreed Upon Energy Savings (Electric) - Control Strategies Implementation – Direct Digital Controls (DDC)

The calculations attached in Appendix "Savings Calculations" include inputs, assumptions and standard calculation methodologies, all of which are part of the energy calculations, and are stipulated for the contract term. The verification techniques for Guarantee Year will be determine savings by providing documentation that verifies the sequence of operation and/or efficiency of a system before and after the retrofit, and multiplying the difference by agreed upon or "calculated" factors. Guarantee Year will utilize manufacturer data for existing equipment as well as for new equipment and use calculated baseline utility use to determine savings. Changes in equipment parameters such as equipment efficiency, equipment run time, and changes in insulation, based on existing and post installation conditions will be used to determine the savings.

The Pre and Post installation changes will be used in the calculations to determine the first year savings. The savings will then be escalated over the course of the guarantee term in accordance with the Table A-1

The energy use (or loss) has multiple factors. For example, in the case of unoccupied period temperature setback, infiltration as well as heat loss (or gain) through the building envelope contributes to the energy use. In order to avoid claiming the energy savings twice, we assumed that the spaces are 'tight', as defined by ASHRAE in terms of infiltration. This is especially a valid assumption, when building envelope enhancements are implemented, resulting in a tighter building envelope.

Non-Measured: Savings are from the reduced fuel consumption of the thermal load as the result of reduced air infiltration.

Pre M&V: Current operating schedule

Post M&V: Verification that schedule in implemented and Active.

Efficiency Upgrade Heating Fuel Savings: Savings are from the reduced fuel consumption of the thermal load.

Agreed Upon Energy Savings – Building Weatherization

The calculations attached in Appendix "Savings Calculations" include inputs, assumptions and standard calculation methodologies, all of which are part of the energy calculations, and are stipulated for the contract term. The verification techniques for Guarantee Year will be determine savings by providing documentation that verifies the sequence of operation and/or efficiency of a system before and after the retrofit, and multiplying the difference by agreed upon or "calculated" factors. Guarantee Year will utilize manufacturer data for existing equipment as well as for new equipment and use calculated baseline utility use to determine savings. Changes in equipment parameters such as equipment efficiency, equipment run time, and changes in insulation, based on existing and post installation conditions will be used to determine the savings.

The Pre and Post installation changes will be used in the calculations to determine the first year savings. The savings will then be escalated over the course of the guarantee term in accordance with Table A-1

Non-Measured: Savings are from the reduced fuel consumption of the thermal load as the result of reduced air infiltration.

Pre M&V: Inspection and measurement of existing conditions

Post M&V: Verification that weatherization measures have been implemented.

Efficiency Upgrade Heating Fuel Savings: Savings are from the reduced fuel consumption of the thermal load.

Agreed Upon Maintenance Savings

The maintenance cost savings for this project are negotiated and agreed upon by ESG and accepted by the Funding Agency. There is no need to verify the agreed upon maintenance savings. The table below outlines the source of the Maintenance savings as reduction to the accepted baseline adjustment. Upon final acceptance of the project all values presented in this table will also be accepted as the final savings values for year requiring no further verification or reporting. These savings will escalate annually as outlined in Section 2.1 in Table A-1.

Maintenance Savings		
ECM	Description	Annual Savings
Base Project-1	Lighting Upgrades	$28,650
TREC-2	Replace VAV Boxes	$1,798
TREC-7A	Replace AHU 3	$736

Agreed Upon Construction Period Savings

The agreed-upon construction period cost savings were estimated by overlapping the guaranteed cost savings of various ECMs with the projected construction schedule. In addition, we applied a safety factor to accommodate potential changes in construction schedule from uncontrolled events.

3-2. CHANGES IN USE OR CONDITION

A. Funding Agency agrees to notify Small GESA Contractor within thirty (30) days of (i) any actual or intended change, whether before or during the Guarantee Term, in the use of any facility, equipment, or Energy Conservation Measure to which this schedule applies; (ii) any proposed or actual expansions or additions to the premises or any building or facility at the premises; (iii) a change to utility services to all or any portion of the premises; or (iv) any other change or condition arising before or during the Guarantee Term that reasonably could be expected to change the amount of Project Savings realized under this Agreement.

1. Such a change, expansion, addition, or condition would include, but is not limited to: (a) changes in the primary use of any facility, Energy Conservation Measure, or portion of the premises; (b) changes to the hours of operation of any facility or portion of the premises; (c) changes or modifications to the Energy Conservation Measures or any related equipment; (d) changes to the M&V Services provided under this Small GESA Contract; (e) insufficient or improper maintenance or unsound usage of the Energy Conservation Measures or any related equipment at any facility or portion of the premises (other than by Small GESA Contractor); or (f) additions or deletions of Energy Conservation Measures or any related equipment at any facility or portion of the premises.

B. If Small GESA Contractor independently learns of any such change or condition, Small GESA Contractor shall calculate and send to Funding Agency a Notice of adjustment to the Annual Project Benefits to reflect the impact of such change or condition, and the adjustment shall become effective as of the date the change or condition first arose. If the Funding Agency fails to promptly provide Small GESA Contractor with notice of any such change or condition, Small GESA Contractor may make reasonable estimates as to the impact of such change or condition and as to the date on which such change or condition first arose in calculating the impact of such change or condition, and such estimates shall be conclusive.

PART 4

BASELINE CALCULATIONS AND UTILITY RATES

4-1. UTILITY COSTS FOR BASELINE

A. The unit utility costs for the Baseline period are set forth below as "Base Utility Cost" and shall be used for all calculations. The Base Utility Cost shall be escalated annually by escalation rate of one percent (1%). The Base Utility Cost for electric represents the 12- month average utility costs from July 1, 2014 through June 30, 2015.

B. The FY 2014 / 2015 energy rates used to calculate savings are $0.092 / kWh for electricity and $0.0145 / KBtu for heating fuel.

Utility Rates		
Electric	0.092	$/kWh
Heating Fuel	0.0145	$/kBTU

Baseline utility rates used for the energy savings calculations were determined according to the following methods:

Electric Rates: Baseline utility rates were determined by dividing the total annual electric costs by the total annual electric consumed (kWh) and then reduced by 25% to account for fixed costs associated with the utility providing electric service.

Heating Fuel Rates: All heating fueled consumed was converted to kBTU based on the following conversion rates

Natural Gas: 102.3 kBTU/CCF
#2 Fuel Oil: 138 kBTU/Gallon
Propane: 92 kBTU/Gallon

The baseline utility rate was determined by dividing the total annual heating fuel costs to the total annual heating fuel consumed (kBTU).

[Remainder of this page left intentionally blank]

PART 5

PRIMARY OPERATIONS SCHEDULE PRE & POST RETROFIT

5-1. PRE/POST RETROFIT

LED Lighting Upgrade

5-1-1. Pre & Post Retrofit – Lighting Hours of Operation

Area Description	Annual Hours
AUDITORIUM	2088
CONFERENCE ROOM	2088
CLASSROOM, HIGH SCHOOL	2284
CLASSROOM, MIDDLE SCHOOL	2055
CLASSROOM, ELEM SCHOOL	1827
FITNESS CENTER	2704
GYMNASIUM	3640
GYM LOCKER ROOMS	3863
HALLWAY	3863
JANITOR CLOSET	728
JANITOR CLOSET - EXISITNG OCC SENSOR	418
KITCHEN	1827
CAFETERIA	2268
LOCKER ROOM	3863
MECHANICAL ROOM	3863
MECHANICAL ROOM - EXISTING OCC SENSOR	3090
OFFICE	2248
OFFICE - EXISTING OCC SENS	1872
EXTENDED OFFICE HOURS 12HR DAY	4380
MEDIA CENTER	2088
RESTROOM	3863
RESTROOM - EXISTING OCC SENSOR	1159
PRIVATE RESTROOM	522
PRIVATE RESTROOM - EXISTING OCC SENSOR	418
STORAGE	1000
STORAGE - EXISTING OCC SENSOR	700
VACANT	8760
VENDING MACHINES	8760
24 HOURS 7 DAYS - EXISTING SENSOR	6132
WAREHOUSE - OCC SENS	1827
EXTERIOR	4380
24 HOURS 7 DAYS	8760
EXTENDED OFFICE HOURS 12HR DAY EXISTING SENSOR	3066
FOREST DISTRICT 8 - CLEAR CREEK	3276
FOREST DISTRICT 4 - FORBES OFFICES	2080
FOREST DISTRICT 4 - FORBES	3261
JENNINGS ENVIRONMENTAL EDUCATION CENTER	2210
ENVIRONMENT EDUCATION	2210
MAINTENANCE/STORAGE HOURS	2601
EXTERIOR - 4 MONTHS OF OPERATION	1440
EXTERIOR - 8 MONTHS OF OPERATION	2880
EXTERIOR - 10 MONTHS OF OPERATION	3600
WATER/RECREATION HOURS	2760
BATH/TOILET HOURS	4581
SHELTER HOURS	3704
MILL HOURS	1000
EXTERIOR - 6 MONTHS OF OPERATION	2160
RETAIL HOURS	1440

Thermal Building System (BAS) Enhancements

5-1-2. Post Retrofit - Schedule of Hours and Setpoints

HVAC	Occupied Hours Pre		Setback Schedule Pre
Monday	6am	6pm	None
Tuesday	6am	6pm	None
Wednesday	6am	6pm	None
Thursday	6am	6pm	None
Friday	6am	6pm	None
Saturday	6am	6pm	None
Sunday	6am	6pm	None

Occupied Hours Post		Setback Schedule Post
6am	6pm	Unoccupied Periods
6am	6pm	Unoccupied Periods
6am	6pm	Unoccupied Periods
6am	6pm	Unoccupied Periods
6am	6pm	Unoccupied Periods
6am	6pm	Unoccupied Periods
6am	6pm	Unoccupied Periods

Pre-Temperatures:

Occupied Temperature Range During Heating Season: 68 degrees F

Unoccupied Low Temperature Limit During Heating Season: 68 degrees F

Heating season: October to May

Occupied Temperature Range During Cooling Season: 70 degrees F

Unoccupied High Temperature Limit During Cooling Season[1]: 70 degrees F

Cooling season: June to September

Post-Temperatures:

Occupied Temperature Range During Heating Season: 68 degrees F

Unoccupied Low Temperature Limit During Heating Season: 63 degrees F

Heating season: October to May

Occupied Temperature Range During Cooling Season[1]: 72 degrees F

Unoccupied High Temperature Limit During Cooling Season[1]: 78 degrees F

Cooling season: June to September

Ventilation and forced air circulation are intended to be discontinued during the unoccupied period

[Remainder of this page left intentionally blank]

PART 6

6.1 MEASUREMENT & VERIFICATION SERVICES

COMMONWEALTH REPRESENTATIVE

A. **GESA Contractor shall ensure that an approved representative from Funding Agency is physically present for all pre-retrofit and post retrofit measurements, for each ECM as applicable to the Energy Savings Guarantee. Funding Agency and GESA Contractor shall mutually witness and record said measurements and sign GESA Contractor's measurement logbook, if deemed mutually acceptable. GESA Contractor shall include all logged measurements in the annual report to be provided.**

6-2. M&V SERVICES

A. GESA Contractor will, for a period of 3 Guarantee Years (the "Reporting Period") unless earlier terminated by Funding Agency, provide the "M&V Services" set forth below in connection with the Assured Performance Guarantee. Funding Agency shall pay GESA Contractor an annual fee during the Reporting Period for such M&V Services as identified in the table below. Notwithstanding anything to the contrary, Funding Agency may choose to continue the M&V services in Guarantee Year Four (4) and beyond by notifying GESA Contractor within thirty (30) days of the end of the third Guarantee Year. If Funding Agency, after GESA Contractor's completion of the third year of M&V Services, does not continue with the M&V Services, it irrevocably acknowledges GESA Contractor's full satisfaction of, and release from, this Assured Performance Guaranty.

1. During the Installation Period, the GESA Contractor's Performance Assurance Engineer will track Measured Project Benefits. The GESA Contractor will report the Measured Project Benefits achieved during the Installation Period to the Funding Agency within 90 days of the commencement of the Guarantee Term.

2. Within 90 days of each anniversary of the commencement of the Guarantee Term, for a period of 3 years, GESA Contractor will provide the Funding Agency with an annual report containing:

    A. an executive overview of the project's performance and Project Benefits achieved to date;
    B. a summary analysis of the Measured Project Benefits accounting; and
    C. depending on the M&V Option, a detailed analysis of the Measured Project Benefits calculations.

3. During the Guarantee Term, for a period of 3 years, the GESA Contractor's Performance Assurance Engineer will monitor the on-going performance of the ECMs, as specified in this GESA Contract, to determine whether anticipated Measured Project Benefits are being achieved. In this regard, the Performance Assurance Engineer will periodically assist the Funding Agency, on-site or remotely, with respect to the following activities:

    A. Conduct one annual on-site visit to verify proper operation of the equipment installed under the project.

B. review information furnished by the Funding Agency from the facility management system to confirm that control strategies are in place and functioning;
C. advise Funding Agency's designated personnel of any performance deficiencies based on such information;
D. coordinate with Funding Agency's designated personnel to address any performance deficiencies that affect the realization of Measured Project Benefits; and
E. inform Funding Agency of opportunities to further enhance project performance and of opportunities for the implementation of additional ECMs.

4. For specified ECMs utilizing "Option A" and "Modified Option A" M&V protocols, the GESA Contractor will:

A. conduct pre and post installation measurements required under this GESA Contract;
B. confirm the building management system employs the control strategies and set points specified in this GESA Contract; and
C. analyze actual as-built information and adjust the Baseline and/or Measured Project Benefits to conform to actual installation conditions (e.g., final lighting and water benefits calculations will be determined from the as-built information to reflect the actual mix of retrofits encountered during installation).

6-3. COST OF M&V SERVICES

Based on direction from the Commonwealth, the fees for the first three (3) years of annual M&V service has been included in the Project; refer to the project cash flow in the Energy Audit Report. The amount to be paid annually by Funding Agency for the M&V services provided is listed in the table below. If the Funding Agency chooses to continue the M&V services in Guarantee Year Four (4) and beyond, it must notify GESA Contractor within thirty (30) days of the end of the third Guarantee Year. If the Customer wishes to continue the M&V Services past the third Guarantee Year, the pricing for each additional Guarantee Year for M&V services will be the Year 3 M&V Cost annually escalated at 3% in each additional Guarantee Year. The billing for the 1st three Guarantee Years will begin with Final Acceptance of this project.

Year	**M&V Cost**
1	$8,441
2	$8,694
3	$8,955
Total	**$26,089**

[Remainder of this page left intentionally blank]

PART 7

FUNDING AGENCY RESPONSIBILITIES

7-1. In order for GESA Contractor to perform its obligations under this GESA Contract with respect to the Work, the Assured Performance Guarantee, and the M&V Services, Funding Agency shall be responsible for:

1. Providing GESA Contractor, its subcontractors, and its agents reasonable and safe access to all facilities and properties that are subject to the Work and/or M&V Services;

2. Properly maintaining, and performing appropriate preventative maintenance on, all equipment and building systems affecting the Assured Performance Guarantee in accordance with manufacturers' standards and specifications;

3. Providing the utility bills, reports, and similar information reasonably necessary for administering GESA Contractor's obligations under the Assured Performance Guarantee within thirty (30) days of Funding Agency receipt and/or generation or GESA Contractor's request therefore;

4. Providing all records relating to energy and/or water usage and related maintenance of the premises and relevant equipment requested by GESA Contractor;

5. Providing and maintaining a dedicated telephone line and/or TCP/IP remote connection to facilitate remote monitoring of relevant equipment;

6. Promptly notifying GESA Contractor of any change in use or condition or any other matter that may impact the Assured Performance Guarantee.

[remainder of this page left intentionally blank]

ENERGY EFFICIENT MEASURES

The table below summarizes ECM savings and cost and simple payback

PA GESA - DCNR Western PA - Region 2 SUMMARY OF PROJECT COSTS FOR EACH DCNR LOCATION						
Location	Building ECM Group	ECM	TOTAL SAVINGS $/yr	ECM Budget	Simple Pay Back	Include Y=yes, N = No)
1	Clear Creek State Park		$5,367	$79,962	14.9	Y
		Lighting Improvements - LED Upgrades				Y
		Building Weatherization and Insulation Improvements				Y
		Domestic Water Improvements				N
2	Cook Forest State Park		$24,413	$173,266	7.1	Y
		Lighting Improvements - LED Upgrades				Y
		Building Weatherization and Insulation Improvements				Y
3	Erie Bluffs State Park		$0	$0	N/A	N
		Lighting Improvements - LED Upgrades				N
		Building Weatherization and Insulation Improvements				N
		Domestic Water Improvements				N
4	Jennings Evironmental Center		$3,253	$39,519	12.1	Y
		Lighting Improvements - LED Upgrades				Y
		Building Weatherization and Insulation Improvements				Y
		Domestic Water Improvements				N
5	Keystone State Park		$7,390	$78,338	10.6	Y
		Lighting Improvements - LED Upgrades				Y
		Building Weatherization and Insulation Improvements				Y
		Domestic Water Improvements				N
6	Kooser State Park		$8,282	$42,296	5.1	Y
		Lighting Improvements - LED Upgrades				Y
		Building Weatherization and Insulation Improvements				Y
		Domestic Water Improvements				N
7	Laurel Hill State Park		$23,789	$256,291	10.8	Y
		Lighting Improvements - LED Upgrades				Y
		Building Weatherization and Insulation Improvements				Y
		Domestic Water Improvements				N
8	Laurel Mountain State Park		$30,545	$289,053	9.5	Y
		Lighting Improvements - LED Upgrades				Y
		Building Weatherization and Insulation Improvements				N
		Domestic Water Improvements				N
9	Laurel Ridge State Park		$949	$25,755	27.1	Y
		Lighting Improvements - LED Upgrades				N
		Building Weatherization and Insulation Improvements				Y
		Domestic Water Improvements				N
10	Laurel Summit State Park		$0	$0	N/A	N
		Lighting Improvements - LED Upgrades				N
		Building Weatherization and Insulation Improvements				N
		Domestic Water Improvements				N
11	Linn Run State Park		$5,460	$61,829	11.3	Y
		Lighting Improvements - LED Upgrades				Y
		Building Weatherization and Insulation Improvements				Y
		Domestic Water Improvements				N
12	Maurice K Goddard State Park		$6,021	$73,429	12.2	Y
		Lighting Improvements - LED Upgrades				Y
		Building Weatherization and Insulation Improvements				Y
		Domestic Water Improvements				N
13	McConnells Mill State Park		$705	$11,423	16.2	Y
		Lighting Improvements - LED Upgrades				Y
		Building Weatherization and Insulation Improvements				N
		Domestic Water Improvements				N

PA GESA - DCNR Western PA - Region 2

SUMMARY OF PROJECT COSTS FOR EACH DCNR LOCATION

Location	Building ECM Group	ECM	TOTAL SAVINGS $/yr	ECM Budget	Simple Pay Back	Include Y=yes, N = No)
			$23,873	$513,367	21.5	Y
		Lighting Improvements - LED Upgrades				Y
		Building Weatherization and Insulation Improvements				Y
		Domestic Water Improvements				N
14	Moraine State Park	Install remote Heating Control for 11 Modern Cabins				Y
		Replace Oil Furnace at Park Office				Y
		Replace Doors and Windows at 2 Maintenance Buildings				Y
		Install Instantaneous Hot Water Heaters at Modern Cabins				Y
			$17,650	$200,543	11.4	Y
		Lighting Improvements - LED Upgrades				Y
15	Ohiopyle State Park	Building Weatherization and Insulation Improvements				Y
		Domestic Water Improvements				N
			$2,203	$27,958	12.7	Y
		Lighting Improvements - LED Upgrades				Y
16	Oil Creek State Park	Building Weatherization and Insulation Improvements				Y
		Domestic Water Improvements				N
			$9,196	$112,697	12.3	Y
		Lighting Improvements - LED Upgrades				Y
		Building Weatherization and Insulation Improvements				Y
		Domestic Water Improvements				Y
17	Point State Park	Replace Upward Lighting in the Portal Bridge to LED				Y
		Remove the Four (4) 1000 Watt Metal Halide Lights and Retrofit with LED fixtures and Bath and Pump House				Y
		Remove Eighteen (18) Center Column 1000 Watt Halogen Lamps and Retrofit them with LED Lamps				Y
			$63,896	$2,040,424	31.9	Y
	Presque Isle State Park	Lighting Improvements - LED Upgrades				Y
		Building Weatherization and Insulation Improvements				Y
		Domestic Water Improvements				N
	II. Tom Ridge Environmental Center	Correct Excessive Pressure in Tower				Y
		Replace Failed Fan Powered Boxes				Y
		Adding individual Private Temperature Controls				Y
		Relocate Thermostats Located on Outside Walls				Y
		Demand Control Ventilation				N
		Evaluate Lab Equipment for Retrofit				N
		Replace Heat Recovery Wheels on AHU 1 and 2				Y
18		Replace Exterior Air Handling Units-All Units				N
		Implement Occupied/Unoccupied Temperature Control				Y
		Replace Boilers in Mechanical Room				N
		Replace Failed Water Heater				Y
		Install New Radiant Tube Heating System and Replace Boiler Maintenance Building				N
		Install VFD on Pumps				Y
		Replace Exterior Air Handling Units-AHU 3 Only				Y
		Replace Heat Recovery Wheel on AHU 3				N
		Repair Failed Fan Powered Boxes				N
	III. Presque Isle	Tie Park Waste Water to Local Municipal WWTP				N
		Wind Power				N
		Replace Boiler and Install New Radiant Tube Heating System In Maintenance Building				Y

PA GESA - DCNR Western PA - Region 2

SUMMARY OF PROJECT COSTS FOR EACH DCNR LOCATION

Location	Building ECM Group	ECM	TOTAL SAVINGS $/yr	ECM Budget	Simple Pay Back	Include Y=yes, N = No)
19	Pymatuning State Park		$16,661	$561,869	33.7	Y
		Lighting Improvements - LED Upgrades				Y
		Building Weatherization and Insulation Improvements				Y
		Domestic Water Improvements				N
		Replace Oil Boiler with Propane Boiler at Jamestown Maintenance				Y
		Replace Oil Boiler with Propane Boiler at Park Office				Y
		Replace Electric Baseboard Heater with Convection Electric Wall Mount at Modern Cabins				N
		Install Propane Tankless Water Heaters at Jamestown and Linesville Bath Houses				N
20	Raccoon Creek State Park		$11,158	$195,373	17.5	Y
		Lighting Improvements - LED Upgrades				Y
		Building Weatherization and Insulation Improvements				Y
		Domestic Water Improvements				N
21	Ryerson Station State Park		$4,317	$74,787	17.3	Y
		Lighting Improvements - LED Upgrades				Y
		Building Weatherization and Insulation Improvements				Y
		Domestic Water Improvements				N
22	Yellow Creek State Park		$10,733	$126,092	11.7	Y
		Lighting Improvements - LED Upgrades				Y
		Building Weatherization and Insulation Improvements				Y
		Domestic Water Improvements				N
23	Forbes Forest District		$10,873	$293,749	27.0	Y
		Lighting Improvements - LED Upgrades				Y
		Building Weatherization and Insulation Improvements				Y
		Domestic Water Improvements				N
		Install New Programmable Thermostats				Y
		Replace Boiler				Y
		Replace Existing Furnace and Install New Unit Heater				Y
24	Gallitzin Forest District		$3,179	$48,244	15.2	Y
		Lighting Improvements - LED Upgrades				Y
		Building Weatherization and Insulation Improvements				Y
		Domestic Water Improvements				N
25	Clear Creek Forest District		$5,364	$71,025	13.2	Y
		Lighting Improvements - LED Upgrades				Y
		Building Weatherization and Insulation Improvements				Y
		Domestic Water Improvements				N
26	Complanter Forest District		$6,180	$119,825	19.4	Y
		Lighting Improvements - LED Upgrades				Y
		Building Weatherization and Insulation Improvements				Y
		Domestic Water Improvements				N
		Replace Boiler in Office				Y
27	DCNR Region 2 Office		$1,265	$16,530	13.1	Y
		Lighting Improvements - LED Upgrades				N
		Building Weatherization and Insulation Improvements				Y
		Domestic Water Improvements				N
		TOTALS	$302,723	$5,533,648		

Exhibit B

Form of Acceptance Certificate

FORM OF ACCEPTANCE CERTIFICATE

FINANCER ADDRESS
Attn: Contract Administration

Re: Installment Purchase Agreement and Payment Schedule (the "Agreement") dated as of _____ between _____ ("FINANCER") and the Commonwealth of Pennsylvania, Acting through the Department of Conservation & Natural Resources ("DCNR")

Ladies and Gentlemen:

In accordance with the Agreement, the undersigned DCNR hereby certifies and represents to, and agrees with Lessor as follows:

1. The implementation/construction of the ECMs (as defined in the Agreement) has been completed by the GESA Contractor (as defined in the Agreement) and such ECMs have been delivered, installed and accepted on the date hereof.

2. DCNR has conducted such inspection and/or testing of the ECMs as it deems necessary and appropriate and hereby acknowledges that it accepts the ECMs for all purposes.

3. DCNR is self-insured in accordance with Section 13 of the Agreement.

4. DCNR hereby reaffirms that the representations, warranties and covenants contained in the Agreement are true and correct as of the date hereof.

5. No event or condition that constitutes, or with notice or lapse of time, or both, would constitute, an Event of Default (as defined in the Agreement) exists at the date hereof under the Agreement.

Date: _____

Commonwealth of Pennsylvania, Acting through
Department of Conservation & Natural Resources ("DCNR")

By: _____

Name: _____

Title: _____

(Seal)

Exhibit C

Payment Schedule

Small GESA Request for Proposals

For

Guaranteed Energy Savings Contractor

For

Small GESA-4 Project for

Department of General Services

At

Department of Conservation and Natural Resources

Western Region

COMMONWEALTH OF PENNSYLVANIA
DEPARTMENT OF GENERAL SERVICES
HARRISBURG

Tom Wolf
Governor

Curtis Topper
Secretary

DATE OF ISSUE:
December 1, 2016

GUARANTEED ENERGY SAVINGS PROJECT

NOTICE TO PROPOSERS

It is the responsibility of each Proposer to ensure that its proposal is received at the delivery location listed below prior to the date and time set for the opening of proposals ("Proposal Opening Time"), regardless of method of delivery used. **No proposal shall be considered if it arrives after the Proposal Opening Time, regardless of the reason for the late arrival.** All envelopes containing proposals must be clearly marked "PROPOSAL" and must include the address of the Proposal Opening location, the assigned contract, project number and the Proposal Opening Date and Time.

Project	Small GESA – 4
Project Location	Department of Conservation & Natural Resources Parks & Forest, Western Pennsylvania
Funding Agency	Department of Conservation & Natural Resources
Brief Description……	The Department of General Services is soliciting proposals for a project to increase the energy efficiency of DCNR Forest and Parks in Western PA through installation of energy conservation measures, upgrades, and implementation of optimal operation and maintenance procedures. The Department wishes to implement the proposed energy project on an energy performance contract basis. Only proposals that have a return on investment of less than 10 years and reduce real energy consumption and are funded under a guaranteed performance basis will be considered. Savings or guarantees provided by the successful proposer will fully offset the project costs involved for the Commonwealth. Only Qualified Small GESA Providers are eligible to submit a Proposal for this RFP. Any submission from a non-Qualified Small GESA Provider will be rejected and returned.
Pre-Proposal Meeting……..	Ohiopyle 124 Main St, Ohiopyle, PA 15470 Tuesday, December 13th, 2016 at 11:00 a.m. Ohiopyle State Park Visitor Center
Site Visits…….……..	Ohiopyle Visit: Tuesday, December 13th, 2016 (after Pre-Proposal Mtg) 3 hour maximum duration Other Site Visits: By Appointment only, 3 hour maximum duration, Contact site personnel, see Site Map section for names and numbers

Ohiopyle Directions…….……..	From Harrisburg, Turnpike W - Exit 91 Donegal - Make Left onto Rt. 31 (E)- approx.. 2 miles - make Right at Light (Rt. 381)- follow Rt. 381 South approx. 25 miles. Cross the bridge into the Borough of Ohiopyle - Visitor Center is on the right approx. ¼ mile from the bridge Site Visits By Appointment only, 3 hour maximum duration
Deliver Proposals To……	Rebecca Tomlinson Department of General Services Room 403 401 North Street Harrisburg, PA 17120 Phone: (717) 705-5946 Email: retomlinso@pa.gov
Proposal Due Date and Time...	**Friday, February 10, 2017 at 11:00 a.m.**
Vendor Registration……...	**All Proposers must have a Current and Active Vendor Number. Proposal Documents require Proposers to provide this number. Register at www.pasupplierportal.state.pa.us**
Proposal Results At……..	www.dgs.state.pa.us, Construction and Public Works tab
Proposed Date of Completion…..	To be Determined
Proposal Period……..	60 days allowed from Proposal Submission Deadline until Notice of Selection
Issuing Office……	Rebecca Tomlinson Energy and Resource Management Office Department of General Services Room 403 401 North Street Harrisburg, PA 17120 Phone: (717) 705-5946 Email: retomlinso@pa.gov
Public Works Verification Act:	**The Bidder must comply with the Public Works Employment Verification Act 127 of 2012 by submitting to the Department a Commonwealth Public Works Verification Form ("Form") prior to the award of the Contract.**

For the listings of Certified Small Diverse Businesses (Minority, Women, Veteran, and Service Disabled Veteran Business Enterprises), go to

http://www.dgs.pa.gov/Businesses/Minority,%20Women%20and%20Veteran%20Businesses/Small-Diverse-Business-Verification/Pages/default.aspx

Table of Contents

Part 1 – General Information

Part 2 – Proposal Format and Required Information

Part 3 – Scoring Process and Criteria for Selection

Part 4 – Work Statement

List of Documents REQUIRED to be submitted to DGS with Proposal

Appendix A	Technical Submission – Proposal Signature Page
Appendix B	Technical Submission – Non-Collusion Affidavit
Appendix C	Small Diverse Business Submission Form

List of Reference Documents NOT to be submitted with Proposal

Appendix D	Mandatory Requirement Checklist
Appendix E	Scoring Committee Scoring Matrix
Appendix F	Standard Contract Provisions
Appendix G	Small GESA Contract with Bond and Assured Performance Guarantee
Appendix H	Small GESA Contract General Conditions
Appendix I	Small GESA Contract Administrative Procedures
Appendix J	Small GESA Project Design Manual
Appendix K	Energy Use Data
Appendix L	Core Energy Conservation Measures
Appendix M	Installment Purchase Agreement
Appendix N	Investment Grade Audit Contract
Appendix O	Prevailing Wage Rates
Appendix P	Building Lighting Floor Plans

PART 1

General Information

1.1 **PURPOSE.** This Small GESA Request for Proposals ("RFP") provides interested Qualified Small GESA Providers (i.e., Proposers) with sufficient information to enable them to prepare and submit a proposal to the Department of General Services ("DGS") to provide services on a Small GESA project under a guaranteed energy savings contract to design and implement Energy Conservation Measures ("ECMs") at DCNR's Western Region Parks. Only Qualified Small GESA Providers are eligible to submit a Proposal for this RFP. Any submission from a non-Qualified Small GESA Provider will be rejected and returned.

A The successful Proposer will, if a contract is awarded and fully executed, become the "Small GESA Contractor" on this project.

B As the Commonwealth Procurement Code, 62 Pa. C.S. §§ 3751 – 3758, as amended, permits, the cost of paying for this Small GESA project will be financed by a third party finance company.

1.2 **Definitions**. These definitions shall apply to terms used in the RFP, without conflicting with any definitions in the General Conditions of the Small GESA Contract:

A **DGS** - The Department of General Services, the agency that will issue the RFP, coordinate the proposal scoring process, award the contract and monitor the design and construction contractual obligations.

B **Energy Conservation Measure (ECM)** –as further defined in 62 Pa. C.S. §3752, as amended.

C **Funding Agency** – The executive agency under the Governor's Office jurisdiction that will fund the individual Small GESA project.

D **GESA** – Guaranteed Energy Savings Act, 62 Pa. C.S. §§ 3751-3758.

E **Issuing Office** – This designated DGS employee will serve as the sole point of contact between any Proposers and the Commonwealth for this RFP.

F **Investment Grade Audit Contract** – The written document between the Funding Agency, Office of Budget, DGS and the Small GESA Contractor signed after selection of the Successful Proposer on a project-specific Small GESA RFP which authorizes payment to the Small GESA Contractor by the Funding Agency for costs incurred in preparing the Energy Audit Report. Even if the Funding Agency elects not to pursue the Small GESA project, the costs for performing the Energy Audit Report must be paid by the Funding Agency.

G **Investment Grade Audit Report** – An extensive written analysis conducted by the Successful Proposer to evaluate viable energy conservation measures based upon the Funding Agency's existing conditions and utility/operating

costs. The Report which contains, at a minimum, the costs, savings and cash flow schedule, will be submitted to DGS and the Funding Agency for review prior to the Funding Agency determining to proceed with a Small GESA Contract.

H **Project** - The site and associated building(s) and infrastructure improvements selected by Commonwealth agencies.

I **Proposer** – Any Qualified Small GESA Provider submitting a Proposal in response to this RFP for consideration by the Commonwealth for the award of a Small GESA Contract.

J **RFP** – "Request for Proposal", the document issued by DGS to obtain proposals for award of a Small GESA contract.

K **Small GESA Contract** – "the Small GESA Contract", the written document executed by the Contractor and the Commonwealth for the implementation of the energy conservation measures. Terms of the Small GESA Contract are non-negotiable. Submission of a Proposal constitutes acceptance of the terms of the Small GESA Contract.

L **Small GESA Contractor** – "the Small GESA Contractor", the entity awarded the Small GESA Contract by DGS.

M **Small GESA Contractor's Retained Professional ("Professional")** – The Small GESA Contractor's retained licensed Professional listed in the Application for the AFQ and whose qualifications are included in the Technical Submission.

1.3 Issuing Office: The DGS Issuing Office is the sole point of contact in the Commonwealth for this RFP. Proposers should not contact any other DGS employees, or other Commonwealth Agency employees with regard to this RFP. All questions or inquiries (which shall be written and not verbal) concerning this RFP shall be submitted as described in this RFP to:

Issuing Officer: Becky Tomlinson
403 North Office Building
401 North Street
Harrisburg, PA 17120
Telephone: (717) 705-5946
Fax: (717) 705-2887
Email: retomlinso@pa.gov

A The Issuing Officer will ensure that questions are answered promptly and that all bulletins will be issued to Proposers who have requested the RFP. Only Proposers who obtained the RFP directly from DGS will receive bulletins.

B **Any entity that is not on DGS' list of Qualified Small GESA Providers will not receive complete bulletins and will be deemed non-responsive on the Proposal Submission Date.**

1.4 **Scope**. DGS wants to procure a Small GESA Contractor capable of providing and implementing the listed energy conservation measures for this Small GESA project located at DCNR's Western Region Parks. The ECMs will reduce energy consumption and related costs associated with the heating, ventilation and air conditioning system, lighting systems, control systems, building envelope, the hot water systems, water consumption, sewage costs and other energy using devices. Additionally, savings which would not reduce consumption per se but are aimed at cost savings, such as fuel switching, demand side management, on-site generation, utility bill auditing, utility rate changes, and distribution upgrades etc. may also be considered. ECMs must result in a guaranteed minimum energy savings with payments linked to actual documented energy and cost reductions.

A Any stipulated energy and/or operational cost savings that may be attributed to a single project will be rigorously reviewed by DGS and the Funding Agency. The Small GESA Contractor will be required by the project-specific contract to thoroughly document and verify the savings, which must be approved by both DGS and the Funding Agency.

B The Small GESA Contractor will be required to guarantee energy and cost savings on an annual basis for each project. No credit for the achievement of savings above and beyond the annual guarantee will be credited to satisfy performance guarantees in future years of the project. Annual reconciliation of the achieved savings will be required.

C Although the provisions of the Commonwealth Procurement Code (62 Pa. C.S. § 3754(c)), permit the recovery of contract costs from energy savings over a 20-year term, the maximum simple blended payback period for any and all ECMs arising out of this RFP is strictly limited to a **maximum term of 10 years**. In addition to the time limit of a 10-year payback period, any Small GESA Contract issued under this RFP **may not exceed a total dollar value limit of $5,000,000**.

1.5 **Type and Award of Contracts**. DGS may award an Investment Grade Audit Contract to the successful proposer. Once the Investment Grade Audit Report is accepted, the Funding Agency may proceed with the Small GESA Project by awarding a Small GESA Contract to the successful proposer. The Small GESA Contract is attached as an appendix to this RFP. The Contract Bond will be in the amount of 100% of the awarded Small GESA Contract. The Effective Date of the contract will be the date when all signatures required by law are affixed to the contract. No contract exists until all such signatures are fixed and the final date becomes the Effective Date of the contract. A stamped "APPROVED ELECTRONICALLY" or similar wording by the Commonwealth on a contract signature page constitutes a valid, binding contract with the Commonwealth and represents that all approvals required by Commonwealth contracting procedures have been obtained. The fully executed Small GESA Contract may not contain "ink" signatures by the Commonwealth. **Terms of the Small GESA Contract are non-negotiable. Submission of a Proposal constitutes acceptance of the terms of the Small GESA Contract.**

1.6 **Commonwealth's Rights Reserved**. DGS reserves the right to cancel or withdraw this RFP in whole or in part any time prior to award of Small GESA

Contract or entering into an Investment Grade Audit Contract. DGS reserves the right to reject any and all proposals received as a result of this request. DGS may, in its discretion, waive any informality or technical deficiency in a proposal.

1.7 **Incurring Costs**. The Commonwealth is not liable for any costs incurred by Proposers prior to issuance of a contract.

1.8 **Pre-Proposal Conference**. A Pre-Proposal Conference will be held as indicated in the Calendar of Events shown at the end of Part 1 of this RFP. Although attendance at the Pre-Proposal Conference is not mandatory, all prospective Proposers, subcontractors and suppliers are encouraged to attend. The Conference will not be videotaped and no recordings will be permitted. Representatives from DGS will present an overview of the RFP and will also review submission requirements and answer questions. If possible, Proposers should forward questions to the Issuing Office prior to the Conference to ensure sufficient analysis prior to an answer being supplied at the Conference. Questions may also be asked at the Conference. Answers furnished during the Conference will not be official or binding until verified, in writing, by the Issuing Office. Questions and answers from the Pre-Proposal Conference issued as a bulletin become part of this RFP.

1.9 **Questions/Requests for Information (RFI) to the RFP**. Proposers shall raise any questions regarding this RFP by submitting a question in writing to the Issuing Officer.

- RFI's must reference the Project name.
- Do not contact the Issuing Officer by phone.
- Questions must be submitted in writing and must be received no later than the date indicated in the Calendar of Events.
- Questions will NOT be answered via telephone.
- All relevant questions and written answers will be issued as a bulletin and become part of this RFP.
- DGS shall not be bound by any verbal information or by any written information allegedly supplied by DGS that is not either contained within the solicitation documents or issued by DGS through a bulletin.

1.10 **Amendments to the RFP**. If the RFP needs to be amended, the Issuing Officer will administer the issuance of bulletin(s) setting forth all modifications to the RFP and questions and answers about the RFP. Notice of each Bulletin will be emailed to all entities that have obtained the RFP through DGS and who have provided the required contact (email) information. Entities that do not provide complete contact information including firm name, prime contact, address, phone, and email might not receive all bulletins. The Proposer shall acknowledge receipt of the bulletin(s) as required by the language of the bulletin. Any proposal that does not acknowledge all bulletins may be considered non-responsive. Bulletin(s) will become part of the RFP. DGS will not issue any bulletin later than indicated in the RFP Calendar of Events, unless DGS extends the Submission Date. By submitting a proposal, Proposer acknowledges and affirms that the provisions of all Bulletins have been included in the Proposal and that the Proposer understands its responsibility for all provisions of all Bulletins. A written bulletin issued by DGS is the only binding revision to this RFP and no other form of

amendment, either written or oral, will be considered binding upon DGS. Proposers shall not rely on information other than written bulletins issued by DGS.

1.11 Proposal Submission Deadline. In order to be considered responsive, a proposal must be delivered to the Issuing Officer **In Harrisburg, Pennsylvania** on or before the Proposal Submission Deadline set forth in the Calendar of Events Paragraph. Proposers who mail proposals should allow sufficient mail delivery time to ensure timely receipt of their proposals. If, due to inclement weather, natural disaster, or any other cause, the DGS office to which proposals are to be submitted is closed on the proposal response date, the deadline for submission shall be automatically extended until the next Commonwealth business day on which the office is open, unless the Proposers are notified otherwise by DGS. The time of day for the extended submission of proposals shall remain the same. The Proposer shall be solely responsible for assuring that the proposal arrives prior to the submission deadline. Proposals delivered after the Proposal Submission Deadline, regardless of the reason for lateness, will automatically be rejected and returned unopened to the Proposer.

1.12 Withdrawal of Proposal. Each Proposer specifically waives any right to withdraw or modify a submission except as hereinafter provided. A Proposal may be withdrawn by written notice (via hand delivery or email) received at the Issuing Office's address for proposal delivery prior to the exact hour and date specified for receipt of the Submission. If the Proposer chooses to attempt to provide such written notice by email, the email address shall be identical to the email address DGS has on file with the Qualified Small GESA Provider, however, DGS shall not be responsible or liable for errors or failures in transmission. A Proposal may also be withdrawn in person by a Proposer or its authorized representative, provided its identity is made known and it signs a receipt for the proposal, but only if the withdrawal is made prior to the exact hour and date set forth for receipt of the proposal. A proposal may only be modified by the submission of a new sealed submission or a sealed modification that complies with the requirements of this RFP and received by the Issuing Office prior to the Proposal Submission Deadline.

1.13 Small Diverse Business Information. As noted in Section 2101 of the Commonwealth Procurement Code, it is Commonwealth policy to assist small businesses in doing business with Commonwealth agencies. In addition, DGS encourages participation by Small Diverse Businesses as prime contractors, and encourages all prime contractors to make a significant commitment to use Small Diverse Businesses as subcontractors and suppliers. A Small Diverse Business is a DGS-verified minority-owned business, woman-owned business, veteran-owned business or service-disabled veteran-owned business.

A A small business is a business in the United States which is independently owned, not dominant in its field of operation, employs no more than 100 full-time or full-time equivalent employees, and earns less than $7 million in gross annual revenues for building design, $20 million in gross annual revenues for sales and services and $25 million in gross annual revenues for those businesses in the information technology sales or service business. In order to participate in the Small Diverse Business program, the small business must first

complete the self-certification process through Small Business Procurement Initiative (SBPI) located at:
http://www.dgs.pa.gov/Businesses/Minority,%20Women%20and%20Veteran%20Businesses/Small-Diverse-Business-Verification/Pages/default.aspx

B Any and all Small Diverse Businesses submitting a Proposal will not be considered a Small Diverse Business in status. No credit toward Small Diverse Business participation levels will be scored or awarded to Small Diverse Business Proposer and/or a Small Diverse Business submitting the Proposal as a Small GESA Contractor.

C The work of qualified Small Diverse Businesses that are subcontractors of any level to the Small GESA Contractor will count toward the Small Diverse Business participation total based on the dollar value of their work.

D Small Diverse Businesses are small businesses that are owned or controlled by a majority of persons, not limited to members of minority groups, who have been deprived of the opportunity to develop and maintain a competitive position in the economy because of social disadvantages. The term includes:

- Department of General Services Bureau of Small Business Opportunities (BSBO)-verified Minority Businesses Enterprises (MBEs), Women Business Enterprises (WBEs), Veteran Business Enterprises (VBEs), and Service-Disabled Veteran Business Enterprises (SDVBEs) that qualify as small businesses; and
- United States Small Business Administration-certified small diverse businesses or
- United States Small Business Administration 8(a) small diverse business concerns that qualify as Small Businesses.

Questions regarding this Program can be directed to:

Department of General Services
Bureau of Small Business Opportunities
Room 611, North Office Building
Harrisburg, PA 17125
Phone: (717) 783-3119
Fax: (717) 787-7052
Email: gs-bsbo@pa.gov
Website: www.dgs.state.pa.us

The Department's directory of BSBO-verified minority, women, veteran and service disabled veteran-owned businesses can be accessed from: http://www.dgs.pa.gov/Businesses/Minority,%20Women%20and%20Veteran%20Businesses/Small-Diverse-Business-Verification/Pages/default.aspx

1.14 Alternate Proposals. DGS has identified the basic approach to meeting its requirements, and will not accept alternate proposals or uninvited proposals. DGS will reject as non-responsive any proposals that are conditioned on negotiating any terms of the documents in the RFP.

1.15 Contact for Clarification. Proposers that submit proposals may be required to make an oral or written clarification of their proposals to the Issuing Office to ensure thorough mutual understanding and Proposer responsiveness to the solicitation requirements. The Issuing Office will handle any requests for clarification.

1.16 Disclosure of Proposal Contents.

A **Confidential Information**. The Commonwealth is not requesting, and does not require, confidential proprietary information or trade secrets to be included as part of Proposers' submissions in order to evaluate proposals submitted in response to this RFP. Accordingly, except as provided herein, Proposers should not label proposal submissions as confidential or proprietary or trade secret protected. Any Proposer who determines that it must divulge such information as part of its proposal must submit the signed written statement described in subparagraph 2 below and must additionally provide a redacted version of its proposal, which removes only the confidential proprietary information and trade secrets, for required public disclosure purposes.

B **Commonwealth Use of Proposal Contents**. All material submitted with the proposal shall be considered the property of the Commonwealth of Pennsylvania and may be returned only at the Issuing Office's option. The Commonwealth has the right to use any or all ideas not protected by intellectual property rights that are presented in any proposal regardless of whether the proposal becomes part of the contract. Notwithstanding any Proposer copyright designations contained on proposals, the Commonwealth shall have the right to make copies and distribute proposals internally and to comply with public record or other disclosure requirements under the provisions of any Commonwealth or United States statute or regulation, or rule or order of any court of competent jurisdiction.

C **Public Disclosure**. Public records requests for proposals are governed by and shall be handled in the following manner:

1. After the award of a contract pursuant to this RFP, or if all proposals are opened and rejected, all proposal submissions are subject to disclosure in response to a request for public records made under the Pennsylvania Right-to-Know-Law, 65 P.S. §67.101, et seq. If a proposal submission contains confidential proprietary information or trade secrets, a signed written statement to this effect must be provided with the submission in accordance with 65 P.S. §67.707(b) for the information to be considered exempt under 65 P.S. §67.708(b)(11) from public records requests.

1.17 Interviews. The proposals will be evaluated and scored as described in detail in this RFP. Those Proposers who accumulate sufficient Technical Submission points as described in Part 3 will be advised of a date and time to interview with the Scoring Committee members.

1.18 News Releases. All news releases and media contacts regarding this project will be made only by DGS, unless DGS directs otherwise in specific instances. Proposer(s) shall not initiate news releases or media contact without prior written

permission of the DGS. This paragraph does not apply to any advertisement soliciting interested subcontractors made by the Proposer during the preparation of the proposal or during preparation of the Investment Grade Audit.

1.19 **Restriction of Contact**. From the issue date of this RFP until the issuance of a Notice of Selection, there shall be no contacts between the Proposers and Commonwealth personnel concerning this RFP, proposals, and the Scoring process except as discussed in this RFP. The only person who may be contacted directly in writing is the Issuing Officer. This restriction ensures that all Proposers obtain the same accurate and binding information, with no advantage or undue influence on any potential proposal scores. Any violation of this condition is cause for DGS to reject the Proposer's proposal. If DGS discovers that any violations have occurred, DGS may reject any proposal or rescind any contract awarded pursuant to this RFP.

1.20 **Term of Contract**. If a contract is awarded and fully executed, the term of the contract will commence on the Effective Date and terminate as defined in the Investment Grade Audit Contract and/or the Small GESA Contract. The Effective Date shall be fixed by DGS after the contract has been fully executed by the Small GESA Contractor and the Commonwealth and all approvals required by Commonwealth contracting procedures have been obtained.

1.21 **Interpretation**. If any conflicts of the Contract Documents arise requiring interpretation, the terms of the General Conditions of the Small GESA Contract shall control. The RFP may be referred to in an effort to assist in the interpretation but will not overrule the General Conditions of the Small GESA Contract.

1.22 **Proposal Results**. The proposals will be scored in a timely fashion following proposal submission date. See Part 3 of this RFP for a detailed discussion on how the proposals are scored by DGS. Proposers should not call or contact DGS to inquire as to the status of the scoring process. The Calendar of Events at the end of Part 1 indicates the anticipated selection date.

1.23 **Debriefing of Unsuccessful Proposers**. DGS will provide written notice to all unsuccessful Proposers on the same day DGS issues the Notice of Selection (if one is issued) to the successful Proposer. As part of this notice to unsuccessful proposers, DGS will notify them of the opportunity and time frame for this optional debriefing. Any unsuccessful Proposer who wants to be debriefed must email a request to the Issuing Officer within three (3) calendar days of the date of the unsuccessful letter. DGS will hold a debriefing conference for each unsuccessful Proposer who submitted a written request for such a conference within four (4) calendar days of receipt of notice of a request for a debriefing but no later than seven (7) calendar days from the date of the unsuccessful letter.

A An Offeror’s exercise of the opportunity to be debriefed does not constitute the filing of a protest. Also, the timeframe for debriefing of unsuccessful Proposers neither extends nor modifies in any way the deadlines for the RFP Protest Procedure set forth herein.

B The Issuing Officer will hold the debriefing conference in Harrisburg or by telephone or video conference if possible. The unsuccessful proposer may review the Proposal Score Summary scores, posted to the DGS website, prior to the debriefing conference.

1.24 Small GESA RFP Protest Procedure. In addition to the summary provided herein, the Protest Procedure is available in the Procurement Code (62 Pa. C.S. § 1711.1).

A **Who may file** – Any Proposer or Prospective Proposer who is aggrieved in connection with the RFP or the award of a contract resulting from the RFP may file a protest.

1. Prospective Proposer – is a Qualified Small GESA Provider that has not submitted a proposal in response to the RFP.

2. Proposer – is a Qualified Small GESA Provider that has submitted a proposal in response to the RFP.

B **Time limits**

1. If a protest is filed by a Prospective Proposer, it must be filed, in writing, with the Issuing Office prior to the Proposal Submission Deadline.

2. If a protest is filed by a Proposer, it must be filed, in writing, with the Issuing Office within seven (7) days after the protesting Proposer knew or should have known of the facts giving rise to the protest except in no event may a protest be filed later than 7 days after the Notice of Selection is posted on the DGS website.

3. Filed – shall be defined as the date upon which the Issuing Office receives the written protest.

C Protests relating to cancellation of the RFP and/or rejection of all proposals may not be filed.

1.25 Investment Grade Audit (IGA). Proposers acknowledge that upon Notice of Selection the successful proposer will become the Small GESA Contractor and will be required to enter an Investment Grade Audit Contract and prepare and submit a project-specific Investment Grade Audit Report. The primary purpose of the Report is to provide an engineering and fiscal basis that will allow DGS and the Funding Agency to fully analyze the proposed scope and cost of the Small GESA contract. Based upon the limited scope and dollar value of Small GESA projects, the Commonwealth anticipates that the IGA should have a maximum 45-day turn-around time.

A **Funding Agency responsibilities -** The Funding Agency shall provide the Small GESA Contractor all available records and data concerning energy and water usage for the Facility for approximately the past 36 months. These records shall include, if available:

1. Utility bills for the past 36 months; and

2. Occupancy information; and

3. Descriptions of any recent changes in the structure or heating, cooling, lighting, or other systems over the past 36 months; and

4. Descriptions of all major energy and water consuming or saving equipment used at the Facility; and

5. Any comfort issues; and

6. Any Notice of Code deficiencies or Consent Decrees; and

7. Description of current energy management procedures; and

8. Any upgrades or modifications to the building made in the last 36 months; and

9. Copies of project as-built drawings, L&I Record drawings, O&M manuals, service agreements, and service work orders.

B **Small GESA Contractor's Investment Grade Audit Report** - The Report will specifically discuss each ECM included in the Investment Grade Audit Contract. The scope shall identify any operational changes recommended to be implemented at the Facility. The Report shall set forth detailed projections of energy and cost savings to be obtained as a result of the ECMs and operational changes.

1. The Small GESA Contractor shall physically inspect the major electrical and mechanical systems in the Facility and analyze the following as they apply to each ECM:

   a. Loads; and

   b. Proper sizing; and

   c. Current operating conditions for each system; and

   d. Efficiencies or hours of operation for each system.

   e. NOTE: Where Facility operating or climatic conditions necessitate, Small GESA may use engineering estimates, but for large fluctuating loads with a high potential savings, Small GESA shall use appropriate measurements.

2. The Small GESA Contractor shall interview Funding Agency personnel to discuss the current mechanical operating systems, occupancy numbers and use of the Facility and any problems with comfort levels or equipment reliability.

3. The Small GESA Contractor shall, using the utility bills provided, establish a baseline annual consumption for electricity, fossil fuels and water utilizing averages or the most representative contiguous 12 months. The Small GESA Contractor shall discuss any deviations or unusual monthly usage that might skew the baseline data with Facility personnel.

4. As applicable to each ECM, the Small GESA Contractor shall:

   a. List ECMs for installation or implementation at the Facility, including cut sheets on proposed equipment.

   b. For each ECM, the Small GESA Contractor shall provide a detailed estimate (using the Pricing Submission numbers submitted during the AFQ stage) for:

      (1). Hard costs; and

      (2). Savings; and

      (3). Life expectancy; and

      (4). Commissioning costs

   c. Specify operations and maintenance procedures for the Facility which will be affected by the installation/implementation of the proposed ECMs.

   d. Provide the analysis methodology, supporting calculations and a detailed explanation of assumptions used to derive the baselines (i.e., work hours of occupants in the Facility) and estimate savings.

      (1). Provide the existing and proposed air and hot water temperatures;

      (2). Provide the amount of outdoor air ventilation;

      (3). Provide lighting and acoustical levels.

      (4). Provide copies of the utility tariffs and commodity price histories used in savings calculations.

         (a). Manual calculations should disclose essential data, assumptions and all formulas so that a reviewer can replicate the calculations based on the data provided in the Report.

         (b). For savings estimates using computer simulations, the Small GESA Contractor shall, if requested by either DGS or the Funding Agency, provide access to the program and all inputs and assumptions used by the Small GESA Contractor.

e. Provide a detailed preliminary savings measurement and verification plan for each ECM.

f. Provide a detailed preliminary commissioning plan for each proposed ECM.

g. Provide detailed calculations for any rate savings proposal.

h. Provide detailed supporting calculations for any proposed maintenance, material or other operational savings.

i. Estimate any environmental costs or benefits of each proposed ECM (e.g., disposal costs, avoided emissions, water conservation, etc.) including any emissions reductions data for NOX, CO2, SO2. Segment emissions data for direct site emissions reductions (e.g. fossil fuels) and indirect emissions reduction data (electricity/water).

1.26 Project Parameters.

A The total energy savings projected in the final scope of work will be at least 95% of the savings and within 10% of project costs projected in the Investment Grade Audit Report and that the project will be self-funded over the financial term of the project (maximum term of 12 years.)

B Small GESA Contractor must adhere to all applicable codes and standards.

C Small GESA Contractor is responsible to design and specify equipment and systems to be used in providing energy efficiency services.

D Small GESA Contractor is responsible to procure and install new equipment and refurbish existing equipment. All new and refurbished equipment must be consistent and compatible with the existing equipment of the Commonwealth.

E Small GESA Contractor is responsible to commission the equipment, as per USGBC-LEED and ASHRAE Guideline 1.1-2007 standards.

F Small GESA Contractor is responsible for preventive and emergency maintenance and servicing of the equipment installed through the warranty period.

G Small GESA Contractor is responsible to provide energy savings performance guarantee (see Exhibit 2 of the Small GESA Contract).

H The Small GESA Contractor must work cooperatively with facility management and the Commonwealth to coordinate this project.

I Small GESA Contractor may not escalate project costs or maintenance costs.

J One percent (1%) escalation of energy cost per year is permitted.

K Interest or Discount Rates shall be assumed to be 3.0%.

L Financing term and overall project shall be assumed to be a 12-year period.

M Small GESA Contractor is responsible to identify and obtain all available financial incentives or rate reductions from companies supplying oil, gas, electricity, or transmission or distribution service for gas or electricity. In addition, Small GESA Contractor is responsible to identify and obtain all government incentives, aid, or other benefits. Small GESA Contractor shall subtract estimated rebates from Total Project Cost to determine Net Project Cost.

N Base price for heating oil should be the actual market price paid by the Commonwealth over the last 12 months.

O Heating season should be generally assumed to be October 1st to May 1st.

P Cooling season, as applicable should be generally assumed to be May 1st to October 1st.

Q Actual baseline operation hours must be determined for each building and area and refined during the audit process by the Small GESA Contractor.

R As discussed in further detail in the General Conditions, provide written documentation no later than project close-out to Funding Agency of the system and installation, including but not limited to:

1. Test Results;
2. Equipment specifications; and
3. Authority over all sequence of operations; and
4. Multiple licenses and software; and
5. Back-up copies of all software programming provided on non-magnetic media; and
6. All documentation, maintenance manuals, and as-builts; and
7. System configurations and equipment locations.

S Measurement and Verification (M&V) methods must be in accordance with the International Performance Measurement and Verification Protocol (IPMVP) as appropriate. See also Exhibit 2 of the Small GESA Contract.

T Proposer acknowledges that the Commonwealth, as Owner, controls the expenditure of any and all contingency funds. Any unspent contingency will be controlled by the Commonwealth at the completion of the project.

1.27 Design and Construction Phase. If, after review of the Investment Grade Audit Report, the Commonwealth decides to go forward with the Project, the Commonwealth will circulate a project-specific Small GESA Contract to the Selected Proposer for signatures in accordance with the Commonwealth

Attorneys' Act. There will be no contract for any specific project until and unless all Commonwealth signatures are affixed to the contract. A stamped "APPROVED ELECTRONICALLY" or similar wording by the Commonwealth on the Small GESA Contract signature page constitutes a valid, binding contract with the Commonwealth and represents that all approvals required by Commonwealth contracting procedures have been obtained. The template contract appears as an appendix to this RFP.

A Small GESA Contractor agrees that time is of the essence and that if it fails to complete the work within the time specified in the project-specific contract, the Small GESA Contractor will pay the Funding Agency, as Liquidated Damages and not as a penalty for such failure, the sum of one tenth of 1% (0.1%) of the value of the Small GESA Contract per day for each and every calendar day after the completion date until the Work is completed and accepted. The Commonwealth may extend the completion date of the Work for causes set forth in the General Conditions of the Small GESA Contract that, in fact, delay the completion of said work. In such case, Small GESA Contractor is liable for said Liquidated Damages only after the expiration of the extended period.

1.28 Service Phase. Upon completion of the Design and Construction Phase, the Small GESA Contractor will perform ongoing services detailed in the project-specific contract to assure savings and guarantees are met, together with the required and appropriate staff training, maintenance services only as required by warranty, and measurement and verification (M&V) services. M&V services must adhere to all federal M&V protocol standards and scalability for M&V of the energy baseline, adjustment factors, and energy cost savings.

1.29 Lead Paint.

A All work is to be performed with the assumption that all painted surfaces are lead containing. The Small GESA Contractor is responsible for following all required OSHA 1926.62 'Lead in Construction' standards when disturbing or impacting these painted surfaces during the course of performing the work, including but not limited to activities such as: cutting and patching, core drilling, penetration, anchoring, fastening, etc. The area(s) shall be visually clean upon completion of any of these activities.

1. Action Plan: The Small GESA Contractor shall submit an Action Plan that conforms to A., 1. – 3. herein for approval at the Initial Project Meeting, which specifically outlines details of means and methods to be used for each dust-generating activity involving lead-painted surfaces, erection of critical barriers and plastic sheeting for dust control, subsequent exposure assessment, personal protective equipment, hygiene and clean-up.

2. Small GESA Contractor shall utilize means and methods that preclude dust generation to complete work that disturbs/impacts lead containing paint (i.e., paint stripper, HEPA-assisted drills, etc.).

3. Small GESA Contractor shall ensure areas beyond work area are not contaminated, and shall immediately stop work and erect plastic sheeting to

prevent the spread of dust, anytime means and methods inadvertently create dust from lead painted surfaces.

1.30 Asbestos and Hazardous Material. If applicable, the Small GESA Contractor will be responsible for providing project-specific asbestos and hazardous material liability insurance as described below. The Small GESA Contractor has the obligation to determine if hazardous materials/wastes will be disturbed or handled/disposed of in performing the project. Hazardous materials/wastes include, but are not limited to, asbestos, mercury and PCBs. If hazardous materials/wastes must be disturbed, removed and/or remediated and/or disposed of, the Small GESA Contractor must advise the Commonwealth beforehand and the Small GESA Contractor shall perform such activities in accordance with industry standards and all federal, State and local regulations and pay for the cost of said activities out of the project savings. A copy of any project-specific Hazardous Material Management Plan, if one exists, will be made available upon request for use as a guide to the presence of ACM. If a management plan is not available, the Small GESA Contractor must test all suspect asbestos, etc. prior to disturbance.

A **Note:** The replacement of equipment or disturbance of materials is the Small GESA Contractor's responsibility and must be performed in a manner that prevents uncontained releases of asbestos, lead, PCB's, mercury, and/or other hazardous materials and provide for their proper disposal. The Commonwealth requires a chain of custody of all materials from source removal to disposal.

B **Hazardous material liability insurance is as follows**: $1,000,000 occurrence/$2,000,000 aggregate, including products and completed operations. Such insurance shall include coverage for the Small GESA Contractor's operations including, but not limited to, removal, replacement enclosure, encapsulation and/or disposal of asbestos, or any other hazardous material, along with any related pollution events, including coverage for third-party liability claims for bodily injury, property damage and clean-up costs. If a retroactive date is used, it shall pre-date the inception of the Small GESA Contract. If motor vehicles are used for transporting hazardous materials, the Small GESA Contractor or its subcontractor shall provide pollution liability broadened coverage (ISO endorsement CA 9948) as well as proof of MCS 90. Coverage shall fulfill all requirements set forth herein and shall extend for a period of three (3) years following acceptance by the Commonwealth of the Certificate of Completion.

1.31 Project Bonds. Although not required to be submitted with the proposal, the Small GESA Contractor shall, for the project authorized under the Small GESA Contract, provide performance and payment bonds in the amount of 100% of each project-specific contract cost as fully described in the General Conditions of the Small GESA Contract and §3753(f) of the GESA. All bonds for this Project shall be issued by a qualified insurer licensed in Pennsylvania.

1.32 Insurance Requirements

A Although not required to be submitted with the Proposal, the successful Small GESA Contractor shall purchase and maintain, at its expense, the following

types of insurance, issued by companies licensed to do business in the Commonwealth of Pennsylvania:

1. Workers' Compensation:

   a. Coverage — Sufficient to cover statutory requirements for all employees involved in work under this agreement

   b. Extensions — Voluntary compensation
   All states coverage employers
   Employers' liability – unlimited

2. Commercial General and Umbrella Liability:

   a. Coverage — Occurrence using ISO occurrence Form CG 00 01 07 98 or later form

   b. Limits per Project — General Aggregate - $3,000,000.00
   Products - Completed/Operations - $1,000,000.00
   Personal & Advertising Injury - $1,000,000.00
   Each Occurrence - $2,000,000.00
   Fire Damage (any one fire) - $100,000.00
   Medical Expenses (any one person) - $50,000.00
   Property Damage - $2,000,000 Each Occurrence

   c. Umbrella - $5,000,000.00

   d. Builder's Risk Coverage - Amount sufficient to repair or replace the work, such amount to be approved by the Commonwealth

   e. Vehicle Liability — $1,000,000 per occurrence/$3,000,000 aggregate (All vehicles hired or non hired)

   f. The Small GESA Contractor shall require their Retained Professional to maintain the following minimum insurance coverage:

      The Architect/Engineer shall maintain professional liability insurance (errors and omissions) in an amount no less than $2,000,000, worker's compensation in amounts required by law and general liability insurance (including owned, non-owned, and hired motor vehicles) in a single limit amount of no less than $1,000,000.

   g. The Small GESA Contractor must, upon award of the GESA Contract by DGS, provide a Certificate of Insurance demonstrating to DGS' satisfaction the existence of the required insurance. The Commonwealth of Pennsylvania shall be named as an Additional Insured, on a primary non-contributory basis, on all certificates of insurance with the exception of Workers' Compensation and Professional Liability. Likewise, the Architect and/or Engineer's insurance coverage shall name the

Commonwealth as an additional insured. The insurance coverages must be approved by DGS prior to the commencement of any work.

h. The insurance coverage to be provided by the Small GESA Contractor shall state that the Small GESA Contractor's coverage shall be the primary coverage for the Small GESA Contractor's work.

i. The required insurance coverages shall be maintained without interruption from the date of commencement of the Work until the date of final payment and/or termination of any coverage required to be maintained after final payment.

j. All insurance coverage to be provided by the Small GESA Contractor, its subcontractors and the Retained Professional shall include a cancellation notice to the Commonwealth of at least thirty days.

k. In the event that any of the insurance coverage to be provided by the Small GESA Contractor and/or Retained Professional to the Commonwealth contains a deductible, the GESA Contractor and/or Retained Professional shall indemnify and hold the Commonwealth harmless from the payment of such deductible, which deductible shall in all circumstances remain the sole obligation and expense of the Small GESA Contractor.

l. The Small GESA Contractor acknowledges that its failure to obtain or keep current the insurance coverage required and/or its failure to ensure that its subcontractors and/or Retained Professional maintain the required coverage, shall constitute a material breach of contract and subjects the Small GESA Contractor to liability for damages, including but not limited to direct, indirect, consequential, special and such other damages the Commonwealth sustains as a result of such breach. In addition, the Small GESA Contractor shall be responsible for the indemnification to the Commonwealth of any and all costs associated with the aforementioned lapse in coverage, including but not limited to reasonable attorneys fees.

m. The Small GESA Contractor shall require all subcontractors to carry similar insurance coverages and limits of liability as set forth herein and adjusted to the nature of subcontractors' operations and submit same to the Commonwealth for approval prior to start of any work. In the event the Small GESA Contractor fails to obtain the required certificates of insurance from its subcontractors and/or Retained Professional, and a claim is made or suffered, the Small GESA Contractor shall indemnify, defend, and hold harmless the Commonwealth, its board, officers, agents or employees from any and all claims for which the required insurance would have provided coverage. <u>This indemnity obligation is in addition to any other indemnity obligation that will be provided for in the Contract</u>.

n. The Small GESA Contractor assumes responsibility for all injury or destruction of the GESA Contractor's materials, tools, machinery, equipment, appliances, shoring, scaffolding, false and form work, and personal property of GESA Contractor's employees from whatever cause

arises. Any policy of insurance secured covering the Small GESA Contractor or subcontractors leased or hired by them and any policy of insurance covering the Small GESA Contractor or subcontractors against physical loss or damage to such property shall include an endorsement waiving the right of subrogation against the Commonwealth for any loss or damage to such property.

o. The Commonwealth in good faith may adjust and settle a loss with the GESA Contractor's insurance carrier. The Small GESA Contractor waives all rights against the Commonwealth, its board, officers, agents and employees for damages caused by fire or other perils to the extent of actual recovery of any insurance proceeds under any insurance policy procured or other property insurance applicable to the GESA Contractor's work.

p. Before commencement of its work, the GESA Contractor, its Architect/Engineer, and its subcontractors shall obtain and pay for such insurance as may be required to comply with the contract documents requirements.

q. In addition to the coverages required and under the same terms and requirements of such coverages, the Small GESA Contractor or its subcontractor shall provide hazardous material liability insurance as follows: $1,000,000 occurrence/$2,000,000 aggregate, including products and completed operations. Such insurance shall include coverage for the GESA Contractor's operations including, but not limited to, removal, replacement enclosure, encapsulation and/or disposal of asbestos, or any other hazardous material, along with any related pollution events, including coverage for third-party liability claims for bodily injury, property damage and clean-up costs. If a retroactive date is used, it shall pre-date the inception of the GESA Contract. If motor vehicles are used for transporting hazardous materials, the Small GESA Contractor or its subcontractor shall provide pollution liability broadened coverage (ISO endorsement CA 9948) as well as proof of MCS 90. Coverage shall fulfill all requirements set forth herein and shall extend for a period of three (3) years following acceptance by the Commonwealth of the Certificate of Completion.

r. In the event that the Project involves removal of asbestos or other hazardous materials, the Small GESA Contractor shall coordinate any asbestos/hazardous material testing and sampling with the Commonwealth's Environmental Consultant. All costs associated with such testing/sampling shall be the responsibility of the GESA Contractor.

s. Under no circumstances shall the successful Small GESA Contractor limit its liability to the amount of its primary comprehensive general liability policy limits.

t. The Small GESA Contractor shall be required to obtain and maintain throughout the course of the Project any insurance coverage beyond that

listed above that may be necessary due to the scope of work encompassed within this Project.

u. The Commonwealth does not warrant or represent that coverages and limits required here and in the General Conditions are appropriate or adequate to protect the GESA Contractor. Providing coverage in these stated minimum limits shall not be construed to relieve the Small GESA Contractor from liability in excess of such limits. All deductibles, co-insurance requirements, and self-insured retention amounts must be disclosed and are subject to acceptance by DGS. The cost of any claim payments falling within the deductible shall be the sole responsibility of the GESA Contractor

1.33 Compliance with Coal Act (71 P.S. §650).The Small GESA Contractor must comply with the provisions of Act 28 of April 9, 1990 (71 P.S. §650) that requires heating systems or heating units installed in state-owned facilities to be fueled by coal unless exempted by the Secretary of the Department of General Services as provided for under the Act.

1.34 Prevailing Wage Act This project is subject to the prevailing wage rate laws and regulations for public work in accordance with the "Pennsylvania Prevailing Wage Act" Act of 1961, P.L. 987, No. 442 of the Pennsylvania State Labor Law. The Small GESA Contractor must comply with the prevailing wage rate laws on each project.

1.35 Public Works Employment Verification Act. As a pre-condition to the award of contract, the Small GESA Contractor will be required to be in compliance and remain in compliance with the Public Works Employment Verification Act ('the Act'). This Act requires that all public works contractors and subcontractors utilize the Federal Government's E-Verify program ("EVP") operated by the U.S. Department of Homeland Security, to ensure that all employees of firms performing work on public works projects are authorized to work in the United States. The Small GESA Contractor will ensure that all subcontracts contain notification of the applicability of the Act, information regarding the use of EVP and either a copy of the actual form or a link to the DGS website containing the form. The Small GESA Contractor will also ensure that prior to beginning onsite or offsite work, every subcontractor shall submit a completed form to the Funding Agency. Additionally, the Small GESA Contractor and all subcontractors shall utilize EVP to verify the employment eligibility of each new employee hired, whether the new employee will be performing on site or offsite work, within five (5) business days of the employee's start date and shall maintain documentation of continued compliance with the Act for the entire duration of the Small GESA Contract.

1.36 Calendar of Events:

Activity	Date
Notice to Proposers and RFP Issued	December 1, 2016
Pre-Proposal Conference	*11:00 AM on December 13, 2016*
Proposers' Deadline to Submit Questions	*January 25, 2017*
DGS' Deadline to Issue Bulletins	*February 1, 2017*
Proposal Submission Deadline Rebecca Tomlinson Issuing Officer 403 North Office Building 401 North Street Harrisburg, PA 17120	*By 11:00 a.m. on February 10, 2017*
Anticipated Date for Interviews with Proposers who received sufficient Technical Submission points	*February 23 & 24, 2017*
Anticipated Date for Announcement of Successful Proposer	*March 3, 2017*

END OF PART 1

PART 2

Proposal Format and Required Information

2.1 Proposal Submission.

A Maintaining the confidentiality of the Submission information is critical, which is why the submission information must be sealed separately. DGS will reject as non-responsive any submission that is not submitted in separately sealed parts. There will be no opportunity for a Proposer to resubmit the proposal after the Proposal Submission Date. Each proposal shall consist of the following 3 **separately sealed parts**:

- **Technical Submission (4 copies and 1 CD); and**
- **ECM/Cost Submission (4 copies); and**
- **Small Diverse Business Submission (1 copy)**

B The Commonwealth may make such investigations deemed necessary and the Proposer shall furnish to the Commonwealth all such information and data for this purpose as requested by the Commonwealth. The Commonwealth reserves the right to reject any proposal if the evidence submitted by, or investigation of, such Proposer fails to satisfy the Commonwealth that such Proposer is properly qualified to carry out the obligations of the Small GESA Contract. By submitting a Proposal, the Proposer agrees to the terms and conditions stated in this RFP. For this RFP, the Proposal Submission, as submitted, must remain valid for 60 calendar days after the Proposal Submission Date and then become part of the Contract Documents.

2.2 Technical Submission Requirements

A The Proposer shall submit four (4) hardcopies and one (1) electronic version of the Technical Submission on a compact disc in a separately sealed envelope/package.

> One of the four (4) hardcopies of the Technical Submission must include one (1) signed original of the following (which do not count toward the sheet/page limit):
>
> 1. Proposal Signature Page signed; and
> 2. Non-Collusion Affidavit signed and notarized.

B **For ease in DGS' reviewing purposes, the first two pages of the Technical Submission should be the Proposal Signature sheet. The third and fourth pages of the Technical Submission should be the Non-Collusion Affidavit.**

C Proposers shall not include cost information (ECMs and construction cost or energy savings) for this Project in the Technical Submission. This separation ensures that the Evaluation Committee's scoring of the Technical information is not tainted by knowing any of the Proposer's costs for this project. Cost information for other projects that the Proposer worked on, including project

budget and actual costs, may be included in the Technical Submission. Small Diverse Businesses may be identified as such in the Technical Submittal, so long as no cost information is revealed.

D **DISCUSSION OF METHODOLOGY FOR DESIGN/IMPLEMENTATION OF ECMS FOR THIS PROJECT**

1. The remainder of the Technical Submission (which is suggested to be between 15 or 20 pages only) is for the Proposer to provide a detailed description of the Proposer's technical plan to design and implement ECMs on this Small GESA project. The description shall focus upon methodology for project specific ECMs. The discussion should include a discussion of interaction with the Funding Agency, the design process, ability to create and maintain a CPM schedule, quality control practices throughout the phases of the project, approach to commissioning, methodology for creating the appropriate Measurement and Verification plan using the IPMVP (International Performance Measurement & Verification Protocol) standards, training and close-out procedures. The description should also discuss the Proposer's guaranteed savings reconciliation practices. Proposers should refer to the Scoring Matrix (which is included as an Appendix) for details on how this information will be scored.

E **DEFINITION OF SHEET/PAGE AND FONT SIZE LIMITS:**

1. A "sheet" means 1 piece of paper, consisting of 2 pages (front and back). A "page" means the 1 side of a sheet. Text font should not be smaller than Times New Roman 11 point. Proposers are advised to take notice of suggested number of sheets/pages.

2.3 ECM/Cost Submission

A Each Proposer shall submit four (4) hardcopies of the ECM/Cost Submission. All four copies shall be sealed in a single envelope/package, separate from the Technical and Small Diverse Business Submissions. Proposers will be interviewed by the Scoring Committee and scored on the basis for their ECM/cost information, the transparency of the calculations and the clarity and reasonableness of estimated amounts by which energy or operating costs would be reduced. **Proposers should refer to the ECM/Cost Submission Scoring Matrix (which is included as an Appendix) for details on how this information will be scored, including a breakdown of the points allotted for individual categories.**

1. The ECM/Cost Submission should be limited to 20 pages. An appendix (with no suggested page limits) can be included with the ECM/Cost Submission to provide all the energy savings calculations.

2. **Energy Conservation Measures and Costs**. Information considered in this submission includes depth of the proposed solution for the facility, including the energy conservation measure descriptions, selected equipment, proposed energy cost savings, proposed energy baseline and adjustment factors, and proposed method and schedules for annual energy audit and

verification of energy and operational cost savings. Although the Evaluation Committee will score specifically using the Scoring Matrix, each scorer will consider in general the degree to which the proposal addresses or discusses the following:

a. The Comprehensive Energy Audit that will be conducted for this Project after the selection of the Small GESA Contractor. The proposal must include information on the systems that will be covered, the personnel to be involved, the general method to be used and the time frame for completion of each item. The proposal must detail the Proposer's methodology for the calculation of the baseline. The utility usage data will be provided as an appendix to this RFP. The proposal should describe in detail the method used to compute the energy baseline. The proposal should also establish the timeline to commence and complete the audit, which should be reflected in the RFP Project Schedule.

b. Proposed energy efficiency measures, providing a preliminary assessment of the energy efficiency opportunities available based upon the information provided in this RFP and the site visit. List the energy efficiency measures to be implemented under the proposal with the estimated implementation cost and the energy cost savings, including detailed energy savings calculations. If there is a reason a proposed ECM listed in the Appendix to this RFP by the Commonwealth is not included in the scope of the proposal, the Proposer must provide a detailed explanation as to why the ECM was excluded from the scope.

Failure to include the estimated cost and cost savings or to discuss why the ECM should not be included will result in a five (5) point deduction the ECM/Cost submission score for each ECM not included or discussed.

c. Provide annual financial projections for the length of the contract, to a maximum of 12 years using a discount rate of 3% and assume an interest rate of 3% and also assume payments will be made on a monthly basis. The format should include the following:

(1). Annual energy costs without improvements;

(2). Annual energy costs with improvements;

(3). Annual energy cost savings (A-B)

(4). Payments for financing equipment

(5). Payments for monitoring and maintenance services

(6). Net annual benefit

(7). Cumulative cash flow

(8). Net Present Value of cash flow

d. The ongoing project monitoring and maintenance services Proposer will provide. Specifically discuss the personnel including identity of supervisor responsible, schedules, conditions, equipment covered and extra costs (if any) of providing scheduled preventive maintenance, warranty work, emergency service, training of DGS staff and monitoring of energy use. There will not be a service contract.

e. The degree to which the proposal demonstrates the technical feasibility, suitability, reasonableness, comprehensiveness and acceptability of the proposed ECMs, including the proposed equipment and level of quality of said equipment for the proposed savings.

f. The degree to which the proposed energy analysis demonstrates sound engineering principles and the reasonableness of the proposed savings.

g. The degree to which the proposed Measurement and Verification (M&V) plan adheres to all M&V protocol standards and demonstrates scalability for measurement and verification of the proposed energy baseline, adjustment factors and energy cost savings.

3. **Detailed Energy Audit Pricing Methodology**

a. Provide a detailed explanation of Proposer's Energy Audit pricing methodology for this specific project, including an estimate of the costs for the Investment Grade Audit (covering the Core ECMs only). Based upon the limited scope and dollar value of the project, the Investment Grade Audit should have a maximum 45-day turn-around time. This time period commences as of the date DGS convenes the Initial Project Meeting, which shall be shortly after the effective date of the Investment Grade Audit Contract.

(9). This explanation shall be in terms of dollars, not a percentage.

(10). The explanation should include a thorough discussion of how the methodology will comply with the format set forth in the Pricing Submission form submitted with the AFQ.

(11). The Scoring Committee will score based upon the reasonableness and transparency of the pricing methodology of these costs.

4. **Guaranteed M & V Pricing Methodology**

a. Provide a detailed explanation of Proposer's Guaranteed Savings Measurement and Verification pricing methodology for this specific project.

(12). This explanation shall be in terms of dollars, not a percentage.

(13). The explanation should include a thorough discussion of how the methodology will ensure compliance with DGS' Design Manual, General Conditions and the IPMVP. The Design Manual, General Conditions and Administrative Procedures are included as Appendixes to this RFP.

(14). The Scoring Committee will score based upon the reasonableness and transparency of the methodology of these costs.

2.4 Small Diverse Business Submission

A Each Proposer shall submit one (1) copy of its Small Diverse Business Submission in a sealed envelope separate from the Technical and ECM/Cost Submissions. A value for each ECM with its associated Small Diverse Business participation percentage should be entered into the Small Diverse Business Submission Form. If no form is submitted or if the submitted form is left blank, DGS will presume that the value is 0% for each ECM and the submission will be scored accordingly. If a Proposer commits to 0%, the proposal will not be rejected as non-responsive, but the Proposer will receive 0 points for their Small Diverse Business Submission.

1. The Small Diverse Business Submission percentage per ECM represents the dollar value the Small GESA Contractor will pay to Small Diverse Businesses for that ECM in accordance with the calculation in section D below.

2. Small Diverse Businesses may provide a wide variety of services and supplies on any Small GESA project. Commitments include payments beyond the initial tier of subcontractors and suppliers ("trickle down" until payments are made to a SDB) and may also include design costs.

3. The Small Diverse Business Submission percentage for each Core ECM will apply to the value of each ECM included in the Small GESA Contract. **Deletion of a core ECM will also delete that ECM's SDB percentage. Any SBD commitments on non-core ECM's will not count toward the overall commitment percentage.**

4. The Proposer should recognize that:

   a. Small Diverse Business subcontractors performing at least 60% of the subcontract with their own employees will be credited toward the provided Small Diverse Business percentage at 100% of the total dollar value of the subcontract/supply contract. Any Small Diverse Business subcontract where the subcontractor performs less than 60% of the subcontract will not be credited.

   b. Small Diverse Business manufacturers are credited at 100% of the total cost of the materials or supplies purchased.

   c. For each Small Diverse Business which is a supplier, the Proposer shall specify whether that supplier is a stocking or non-stocking supplier.

(1). Stocking suppliers will be credited at 60% of the total cost of the materials or supplies purchased.

(2). Non-Stocking suppliers, are credited at only the amount of the fee or commission charged by the Small Diverse Business non-stocking supplier for assistance in the procurement of the materials and supplies provided the fees or commissions are reasonable and not excessive as compared with fees customarily allowed for similar services and with the understanding that under no circumstances shall the credit, for a Small Diverse Business non-stocking supplier, exceed 10% of the purchase order cost.

End of Part 2

PART 3

Scoring Process and Criteria for Selection

3.1 Competitive Sealed Proposal Award.

A If the Commonwealth selects a Proposer, the selection will be made only to the responsive and responsible Proposer whose proposal conforms to the requirements of this RFP and receives the highest overall score by the Scoring Committee in accordance with the Scoring factors, procedures, and criteria set forth in this RFP.

3.2 Selection Formula.

A The Issuing Officer will use the following formula to calculate the Proposal Score for each responsive and responsible proposal. The selected Proposer will be the Proposer whose proposal has obtained the highest Total Proposal Score. The maximum Proposal Score is 500.

Technical Submission Score x (.40)
+
ECM/Cost Submission Score x (.40)
+
SDB Submission Score x (.20)
Total Proposal Score:

3.3 Proposal Scoring Process:

A The proposals will be evaluated by the Scoring Committee comprised of three scoring members. The Committee will also include a non-scoring representative from DGS' Office of Chief Counsel (OCC) and the non-scoring Issuing Officer.

B After the Proposal Submission date, a representative from OCC will assist a representative of DGS' Public Works Bidding Unit in opening each proposal. The OCC representative will conduct a Proposal Compliance Review, the purpose of which is to determine each proposal's compliance with the Mandatory Proposal Requirements, including noting violations of page limits and appropriate deductions.

C After the OCC/Bidding Unit representative determines the responsiveness of all the proposals received, the OCC representative will forward the Technical Submissions to the Issuing Officer. The ECM/Cost Submissions and the Small Diverse Business Submissions will remain sealed until the Scoring Committee has completed its Scoring of the Technical Submissions. The Issuing Officer will not distribute the Technical Submission for any proposal that has been deemed non-responsive.

1. **Technical Submission Scoring**

   a. Each Scoring Committee member will receive responsive proposals shortly after the submission date. Each member will independently evaluate and score every Proposer's Technical Submission using the same Scoring Matrix included as an appendix to this RFP and will forward the scores to the Issuing Officer. The Technical Submission maximum score is 500 points.

b. The Issuing Officer will convene a meeting of the Scoring Committee to calculate the Total Technical Score for each proposer and determine which, if any, Proposers met the minimum score requirements. All Committee Member's scores will be averaged, resulting in a Total Technical Score for each Proposer.

(1). The Total Technical Scores of the proposers will not be revealed outside the Scoring Committee until after DGS issues the Notice of Selection.

(2). The Proposer's Total Technical Score will be used by the Scoring Committee in determining the successful proposer.

(3). Proposers receiving a Total Technical Score less than 70% of available points (less than 350) will be rejected as non-responsive and will not be considered for award of the Small GESA contract. These Proposers will be notified by letter of their rejection.

(4). The Total Technical Score will be final and will not be adjusted as a result of the interview process.

2. **Interview Process**

a. Every Proposer who receives 70% of the available Technical Submission points will be notified by letter regarding the date and time scheduled for interviews with the Scoring Committee to discuss their ECM/Cost submission.

(1). The interviews will be in Harrisburg and will be set for the same location and duration for each Proposer.

(2). The Scoring Committee, the Issuing Officer and the OCC representative will attend each interview with the Proposers.

(3). Each interview will focus upon an in-depth discussion of the Cost Submission.

(4). Scoring Committee members will not finalize or submit Cost scores for any proposal until after all interviews have been completed.

(5). After the interview process is complete, each Scoring Committee member will independently score each ECM/Cost Submission using the scoring matrix included as an appendix to this RFP.

(6). The Issuing Officer will convene a meeting of the Scoring Committee to calculate the ECM/Cost score for each Proposer. All Committee Member's scores will be averaged for each Proposer.

(7). Once the Total ECM/Cost Submission scores are finalized, the Small Diverse Business Submissions will be opened by the Issuing Officer.

3. **Small Diverse Business Submission Scoring**

a. Proposals shall be scored on an objective basis, based upon their individual percentages of commitments. The Proposer with the highest percentage will receive the most points. The other Proposers will receive a points based upon the formula set forth in the applicable scoring paragraph of the RFP. Proposers acknowledge that this commitment percentage per ECM constitutes a material element of the scoring for this RFP and will be included as the binding percentages of the Small GESA Contract. Failure to meet or exceed the percentages may be deemed to be a breach of contract.

$$500 - \left(500 \times \frac{\text{Highest Proposer's SDB \% – Proposer's SDB \%}}{\text{Highest Proposer's SDB \%}}\right)$$

4. **Total Proposal Score and Recommendation Memo**

a. When the Issuing Officer and the Scoring Committee members have calculated the Small Diverse Business Submission scores, the Issuing Officer will calculate the Total Proposal Score using the Selection Formula set forth in this RFP.

b. The Issuing Officer will submit a recommendation memo identifying the successful proposer to the Deputy Secretary for Public Works for DGS and the Secretary of DGS for review and approval.

c. DGS will issue a written Notice of Selection to the Proposer whose proposal is determined to be the most advantageous to the Commonwealth in accordance with the Scoring factors, procedures and criteria set forth in this RFP.

d. DGS will post the following information on the DGS Public Works website after the Notice of Selection is issued:

(1). The successful Proposers' Technical Submission

(2). The successful Proposers' Total ECM/Cost Submission

(3). The successful Proposers' SDB Submission

(4). All Proposers' Proposal Score Summary but only the successful Proposer's identity revealed on the spreadsheet.

(5). The Issuing Officer's Recommendation Memo.

END OF PART 3

PART 4

Work Statement

4.1 General Description of the Project Scope

A The objective of this RFP is to solicit proposals for a project to assist the Department of General Services to become as energy efficient as possible at the Selinsgrove Center, in Selinsgrove PA through installation of energy conservation measures, upgrades, and implementation of optimal operation and maintenance procedures. DGS wishes to implement the proposed comprehensive energy project on an energy performance contract basis. Only proposals that evidence a return of investment of less than 10 years, reduce real energy consumption, and are funded under a guaranteed performance basis will be considered by the Commonwealth.

B The Project goals include, but are not limited to the following, which are listed in no particular order of importance:

- Improving utilization of technology;
- Collecting and managing building/facility information in 'real time;
- Minimizing financial and technical risk to the Commonwealth;
- Establishing current base usage for electricity;
- Reducing energy usage; and
- Reducing operating costs

C Savings or guarantees provided by the successful Proposer must fully offset the Project costs involved for the Commonwealth.

D The Commonwealth will issue a separate procurement to obtain financing for the Small GESA Contract to obtain the lowest cost possible.

E The Funding Agency will finance and own any new equipment installed as a result of this project. DGS reserves the right to consider its options relative to the purchase, finance and ownership of any new equipment installed. Proposals shall include the Proposer's services in connection with such arrangements. **All services shall be stated separately.**

4.2 Engineering Services.

A The successful Proposer, who shall become the Small GESA Contractor upon the effective date of the Investment Grade Audit (IGA) Contract or the Small GESA Contract, shall use the services of the Small GESA Contractor's in-house or Retained Professional to prepare the IGA and the plans and specifications for all Energy Conservation Measures (ECM) proposed, reviewed and accepted by the Commonwealth. The Small GESA Contractor will provide the Small GESA Contractor's Retained Professional with design details. DGS, the Funding Agency and the Small GESA Contractor will review for approval the final plans and specifications.

4.3 Project Parameters.

A Proposals are requested for the provision of services for the reduction of energy consumption and for maintenance and operational savings and services on a performance contracting basis at facilities owned by the Funding Agency. Specifically, the Small GESA Contractor selected as a result of this RFP will be expected to provide comprehensive energy and design services at DCNR Western Region Parks, including but not limited to:

1. Performance of an Investment Grade Audit Report;

2. Proposal must contain a statement from the Proposer that the total energy savings projected in the final scope of work will be at least 95% of the savings projected in the proposal, the actual ECM costs shall be within 10% of the costs listed in the IGA, and that the project will be self-funded over the financial term of the project (maximum term of 12 years.);

3. Small GESA Contractor must adhere to all applicable codes and standards;

4. Services in connection with the design and specification of equipment and systems to be used in providing energy efficiency services;

5. Procurement and installation of new equipment and refurbishing existing equipment. All new and refurbished equipment must be consistent with the existing equipment of the Commonwealth;

6. Commissioning of the equipment, as per USGBC-LEED and ASHRAE Guideline 1.1-2007 standards;

7. Preventive and emergency maintenance and servicing of the equipment installed through the warranty period;

8. Staff training;

9. Energy savings performance guarantees;

10. The Small GESA Contractor must work cooperatively with facility management and the Commonwealth in coordinating this Project;

11. The Small GESA Contractor has the obligation to determine if hazardous materials/wastes will be disturbed or handled/disposed of in performing the project. Hazardous materials/wastes include, but are not limited, to asbestos, lead paint, mercury and PCBs. If hazardous materials/wastes must be disturbed, removed and/or remediated and/or disposed of, the Small GESA Contractor must advise the Commonwealth beforehand and perform such activities in accordance with all Federal and State regulations and pay for the cost of said activities out of the Project savings. A copy of the Hazardous Material Management Plan will be made available upon request for use as a guide to ACBM in the various buildings. If a management plan is not available, the Small GESA Contractor must test all suspect asbestos or lead painted surfaces prior to disturbance;

a. **Note**: The replacement of equipment or disturbance of materials is the Small GESA Contractor's responsibility and must be performed in a manner that prevents the release of asbestos, lead, PCB's, mercury, and/or other hazardous materials and provide for their proper disposal. The Commonwealth requires a chain of custody of all materials from source removal to disposal.

12. Operating and Maintenance (O&M) costs shall not be included in cash flow or ECMs Estimates of Operating and Maintenance cost unless agreed to by the funding agency and DGS. If not agreed to the savings may be listed for informational purposes only;

13. Interest or Discount Rates shall be assumed to be 3.0%;

14. Financing term and overall Project shall be assumed to be a 12-year period;

15. One percent (1%) escalation of energy cost per year is permitted;

16. No escalation of Project costs or maintenance costs;

17. Identification of and obtaining all available financial incentives or rate reductions from companies supplying oil, gas, electricity, or transmission or distribution service for gas or electricity. Identifying and obtaining all government incentives, aid, or other benefits;

18. List estimate of available rebates. If the Small GESA Contractor is receiving the rebates, subtract estimated rebates from Total Project Cost to determine Net Project Cost upon which lease payments are based;

19. Base price for heating oil should be the actual market price paid by the Commonwealth over the last 12 months;

20. Heating season should be generally assumed to be October 1st to May 1st;

21. Cooling season, as applicable should be generally assumed to be May 1st to October 1st;

22. Actual baseline operation hours must be determined for each building and area and refined during the audit process by the Small GESA Contractor;

23. Assume one year of interest accrual for the construction period in Small GESA Contractor's financial Pro-Forma;

24. Use the Commonwealth's most recent provided fiscal year as the baseline for your energy usage in the project response;

25. As discussed in further detail in the General Conditions, provide written documentation no later than project close-out to Funding Agency of the system and installation, including but not limited to:

    a. Test Results;

b. Equipment specifications;

c. Authority over all sequence of operations;

d. Multiple licenses and software;

e. Back-up copies of all software programming provided on non-magnetic media;

f. All documentation, maintenance manuals, and as-builts; and

g. System configurations and equipment locations.

26. Include Measurement and Verification (M&V) costs for 3 years as part of your proposal. M&V methods must be in accordance with the International Performance Measurement and Verification Protocol (IPMVP) as appropriate. Indicate in your RFP response the M&V Option being employed for each measure. At no time may measures be simply noted as "stipulated savings".

4.4 Scope of Work.

A **The "Core Energy Conservation Measures"** set forth in the Appendix to this RFP must be considered and discussed as part of every proposal. If an item is considered, but determined not feasible for inclusion in the Project, the Small GESA Contractor must provide a narrative explaining why the ECM is not feasible.

B In addition to the "Core ECMs", the Small GESA Contractor may identify additional cost effective ECMs that can be taken to reduce consumption and costs for heating, cooling, ventilation, lighting, water heating and other energy uses in each facility. The proposal should address consumption of all energy sources including oil, gas and electricity. Measures may involve controlling, modifying, adding or replacing equipment and systems. The Small GESA Contractor shall establish consumption levels for all current services as a baseline for measurement of savings.

C The Commonwealth reserves the right to negotiate the final scope of ECMs with the successful Proposer as further described in this RFP.

D The Commonwealth's final scope of work will reflect an acceptable project without out-of-pocket expense, deficit or negative cash flow at any time during the project term, as opposed to a maximization of cash flows. **Proposals shall guarantee recovery of contract costs from energy savings realized by the Commonwealth during the term of the Small GESA Contract, which shall not exceed twelve years.**

E Each building, including all portables, identified in this solicitation must be evaluated for any potential savings.

4.5 Conditions To Be Maintained The following energy end use conditions must be maintained at the facility. Any efficiency measures proposed must allow for the maintenance of these conditions, as well as comply with State Code and all requirements of the Funding Agency:

A Minimum Temperature: Temperatures in occupied areas during the hours of 6:00AM TO 6:00PM must be maintained at no less than 68 degrees F during the heating season or during scheduled activities. Unoccupied setback must be no less than 63 degrees F.;

B Maximum Temperature: Temperatures in occupied areas during the hours of 6:00AM TO 6:00PM or during scheduled activities must be maintained at no more than 76 degrees F during the cooling season (where air conditioning equipment is located). Unoccupied setback must be no more than 80 degrees F.;

C Indoor and Outdoor Lighting: Funding Agency's lighting level standards must be maintained. Spaces shall be considered "Occupied" from 6:00AM to 6:00PM and during scheduled activities, except for Security lighting and night lighting, which shall be "Occupied" 24/7;

D Air Changes/Ventilation Requirements: Within code at all times, including ASHRAE standards for fresh air ventilation: and

E Existing ventilation code requirements not met shall be identified as such. Failure to do so will subject bid to be non-compliant.

The Commonwealth reserves the right to increase or decrease the minimum and maximum temperatures provided above.

END OF PART 4

APPENDIX A

Proposal Signature Page

Proposal Signature

Proposer's Representations and Authorizations. Proposer by signing on the signature page and submitting its proposal understands, represents, acknowledges and certifies that:

a. All information provided by, and representations made by, the Proposer in the proposal are material and important and will be relied upon by the Issuing Office in awarding the contract(s). Any misstatement shall be treated as fraudulent concealment from the Issuing Office of the true facts relating to the submission of this proposal. A misrepresentation shall be punishable under 18 Pa. C.S. § 4904.

b. No attempt has been made or will be made to induce any firm or person to refrain from submitting a proposal on this contract, or to submit a proposal higher than this proposal, or to submit any intentionally high or noncompetitive proposal or other form of complementary proposal.

c. The proposal is made in good faith and not pursuant to any agreement or discussion with, or inducement from, any firm or person to submit a complementary or other noncompetitive proposal.

d. To the best knowledge of the person signing the proposal for the Proposer, the Proposer, its affiliates, subsidiaries, officers, directors, and employees are not currently under investigation by any governmental agency and have not in the last four (4) years been convicted or found liable for any act prohibited by State or Federal law in any jurisdiction, involving conspiracy or collusion with respect to bidding or proposing on any public contract, except as disclosed by the Proposer in its proposal.

e. To the best of the knowledge of the person signing the proposal for the Proposer and except as otherwise disclosed by the Proposer in its proposal, the Proposer has no outstanding, delinquent obligations to the Commonwealth including, but not limited to, any state tax liability not being contested on appeal or other obligation of the Proposer that is owed to the Commonwealth.

f. The Proposer is not currently under suspension or debarment by the Commonwealth, or any other state, or the federal government. If the Proposer has received, within three years of the issuance of this RFP, a Notice of Default from the Commonwealth, other state or the federal government, then the Proposer shall submit, as part of the Technical Submission, seven copies of a written explanation of why such Notice of Default was issued. This written explanation shall not exceed 1 sheet (2 pages) and shall not count towards the sheet and page limit established for the Technical Submission of the proposal.

g. The Proposer has not, under separate contract with the Issuing Office, made any recommendations to the Issuing Office concerning the need for the services described in the proposal or the specifications for the services described in the proposal.

h. Each Proposer, by submitting its proposal, authorizes all Commonwealth agencies to release to the Commonwealth information related to liabilities to the Commonwealth including, but not limited to, taxes, unemployment compensation, and workers' compensation liabilities.

i. Until the awarded Small GESA Contractor receives a fully executed and approved written contract from the Issuing Office there is no legal and valid contract, in law or in equity, and the Small GESA Contractor should not begin to perform.

j. The total energy savings projected in the final scope of work will be at least 95% of the savings projected in the proposal and that the project will be self-funded over the financial term of the project (maximum term of 20 years.)

k. Proposer agrees and certifies in accordance with the enclosed Commonwealth of Pennsylvania:

- Nondiscrimination/Sexual Harassment Clause
- Tax Liability Certification
- Americans Disabilities Act
- GESA Contractor Integrity Provisions
- GESA Contractor Responsibility Provisions
- Environmental Statement
- Compliance with State and Federal Statutes, Rules and Regulations
- Non-Collusion Affidavit

I am authorized to sign this proposal on behalf of the Proposer and I agree and state that _____ (Name of Firm) understands and acknowledges that the above representations are material and important, and will be relied upon by the Department of General Services in awarding the contract(s) for which this proposal is submitted. I understand and my firm understands that any misstatement shall be treated as fraudulent concealment from the Department of General Services of the true facts relating to the submission of this proposal.

_____
Signature

_____
Print Name Legibly

_____
Title

APPENDIX B

Non-Collusion Affidavit

INSTRUCTIONS FOR NONCOLLUSION AFFIDAVIT

1. This Non-collusion Affidavit is material to any contract awarded pursuant to this proposal. According to §4507 of the Commonwealth Procurement Code, 62 Pa.C.S. §4507, governmental agencies may require Noncollusion Affidavits to be submitted with proposals.

2. This Non-collusion Affidavit must be executed by the member, officer, or employee of the Proposer who makes the final decision on prices and the amount quoted in the proposal.

3. Bid rigging and other efforts to restrain competition, and the making of false sworn statements in connection with the submission of proposals are unlawful and may be subject to criminal prosecution. The person who signs the affidavit should examine it carefully before signing and assure himself or herself that each statement is true and accurate, making diligent inquiry, as necessary, of all other persons employed by or associated with the Proposer with responsibilities for the preparation, approval or submission of the proposal.

4. In the case of a proposal submitted by a joint venture, each party to the venture must be identified in the proposal documents and an affidavit must be submitted separately on behalf of each party to the joint venture.

5. The term "complementary proposal" as used in the affidavit has the meaning commonly associated with that term in the proposal process, and includes the knowing submission of proposals higher than the proposal of another firm, any intentionally high or noncompetitive proposal, and any other form of proposal submitted for the purpose of giving a false appearance of competition.

6. Failure to submit an affidavit with the Proposal in compliance with these instructions may result in disqualification of the proposal.

NONCOLLUSION AFFIDAVIT

DGS Project Number: _____

State of _____:

County of _____: s.s.

I state that I am the _____ (Title) of _____ (Name of Firm) and that I am authorized to make this affidavit on behalf of my firm, and its owners, directors, and officers. I am the person responsible in my firm for the prices(s) and the amount of this proposal.

I state that:

1. The price(s) and amount of this proposal have been arrived at independently and without consultation, communication or agreement with any other contractor, proposer, or potential proposer.
2. Neither the price(s) nor the amount of this proposal, and neither the approximate price(s) nor approximate amount of this proposal, have been disclosed to any other firm or person who is a proposer or potential proposer, and they will not be disclosed before the proposal submission date.
3. No attempt has been made or will be made to induce any firm or person to refrain from proposing on this contract, or to submit a proposal higher than this proposal, or to submit any intentionally high or noncompetitive proposal or other form of complementary proposal.
4. The proposal of my firm is made in good faith and not pursuant to any agreement or discussion with, or inducement from, any firm or person to submit a complementary or other noncompetitive proposal.
5. _____ (Name of Firm) its affiliates, subsidiaries, officers, directors, and employees are not currently under investigation by any governmental agency and have not in the last four years been convicted or found liable for any act prohibited by state or federal law in any jurisdiction, involving conspiracy or collusion with respect to proposing and/or bidding on any public contract, except as follows:
   _____

I state that _____ (Name of Firm) understands and acknowledges that the above representations are material and important, and will be relied upon by the Department of General Services in awarding the contract(s) for which this proposal is submitted. I understand and my firm understands that any misstatement in this affidavit is and shall be treated as fraudulent concealment from the Department of General Services of the true facts relating to the submission of this proposal.

_____
(Signature)

_____
(Signatory's Printed Name)

_____
(Signatory's Title)

SWORN TO AND SUBSCRIBED
BEFORE ME THIS _____ DAY OF
_____, 20_____.

_____
Notary Public

My Commission Expires

_____

APPENDIX C

Small Diverse Business

Submission Form

Submit 1 original in a sealed envelope separate from the Technical Submission and the ECM/Cost Submission

After examination of the contract documents, which are made a part hereof as if fully set forth herein, the Proposer commits to the following percentage for Small Diverse Business participation on this project. The Proposer understands the language in the RFP regarding the calculation of the percentage.

Project: Small GESA Project _____

Proposer (Firm) Name

_____

Commitment for Small Diverse Businesses for each ECM: (FILL IN)

ECM	Dollar Value of ECM	% SDB Commitment	Dollar Value SDB Commitment
			($ Value of ECM x % Commitment)
1			
2			
3			
4			
5			
6			
7			
8			
9			
10			
TOTAL		N/A	

Proposer's SDB % = 100 X Total Dollar Value SDB Commitment
Total Dollar Value of ECMs

_____% _____ Percent
(Figure) (Written)

APPENDIX D

Mandatory Requirement Checklist

RESPONSIVENESS CHECKLIST

RFP for Project No. :_____

Proposer's Name: _____

Office of Chief Counsel Rep.: _____ Date: _____
Bidding Unit Rep.: _____ Date: _____

Mandatory Submittal Requirements

Indicate in the spaces provided if the proposal meets each of following mandatory proposal requirements. Any Proposal that has a "No" checked will be rejected as non-responsive.

Mandatory requirements	**Yes**	**No**
Technical, ECM/Cost, and SDB Submissions included and separately sealed		
Non-Collusion Affidavit properly completed and notarized		
Proposal Signature properly completed and signed		
Technical Proposal contains no project specific Cost Submission Information		

APPENDIX E

Scoring Committee Scoring Matrices

Small GESA-4 Technical Submission Scoring Matrix	
Description	**Points**
Project Management Team	**40**
Organizational Chart clearly depicts hierarchy and reporting structure of the core project team members with specific individuals named with roles.	10
Proposal demonstrates a successful history of working relationships on past projects by core project team members.	10
Proposal describes the specific and meaningful roles fulfilled by core members.	10
Established history of working relationship between Proposer, the Retained Professional, and selected subcontractors on GESA projects.	10
Work Plan for this Project	**120**
Proposal contains a detailed description of how the Proposer will coordinate with DGS and the Funding Agency.	10
Proposal demonstrates a thorough understanding of the design process and sets forth how the Proposer will coordinate with the Retained Professional.	15
Proposal demonstrates a thorough understanding of the design process on Small GESA projects using the DGS Procedure Manual.	15
Proposal identifies design issues and describes how to manage and execute the Project.	15
Proposal thoroughly describes construction challenges and proposed solutions.	10
Proposal thoroughly describes a construction plan, including site operations, logistics, lay down areas and a detailed discussion about how to execute the project in a downtown location.	15
Proposal demonstrates a thorough understanding of scheduling and construction practices using DGS' General Conditions and Administrative Procedures.	5
Proposal describes project safety plan and monitoring.	5
Proposal describes an effective Quality Control Plan.	5
Proposal clearly describes Proposer's methodology for Commissioning this project.	5
Proposal describes training of Funding Agency personnel, manuals, occupancy permits, commissioning and final close-out approach.	10
Proposal clearly describes Proposer's methodology for creating the appropriate Measurement and Verification plan.	10
Critical Path Schedule	**40**
Narrative clearly identifies and discusses critical aspects of the schedule, associated risks and the process to ensure achievement of critical milestone dates.	25
CPM sets forth a logical progression of critical path, including at least the Notice of Award, duration and submission date of Energy Audit Report, full execution of Energy Contract, permits submission and approval dates, durations of on-site work, commissioning and training.	10

CPM integrates and coordinates construction with local utilities, subcontractors, equipment suppliers and Funding Agency facility personnel.	5
Qualifications, Experience & Past Performance	**300**
Proposal clearly explains the qualifications and experience of all core members, including project specific roles and not generalized work performed on projects.	75
Proposal provides a detailed explanation of qualifications and experience for core members on LED conversions and HVAC controls projects.	40
Proposal clearly identifies the Retained Professional's individual core personnel and clearly establishes the Retained Professional's ability to complete energy projects involving LED conversion and HVAC controls.	75
Proposal demonstrates the Retained Professional's readiness and commitment of personnel.	15
Proposal clearly establishes Subcontractors' ability to complete Small GESA projects since 2010 with the team identified in this proposal.	75
Subcontractors' Qualification demonstrates readiness and commitment of personnel.	20
Total	**500**

Small GESA-4 ECM/Cost Submission Scoring Matrix	Points
Energy Conservation Measures	**200**
Every ECM described in Appendix document is either calculated into the project scope or the Proposer set forth a detailed justification for exclusion of the ECM.	50
Proposal provides a preliminary assessment of the ECMs, including a detailed estimate of implementation costs and energy cost savings (including detailed calculations) for each ECM.	60
Proposal thoroughly demonstrates the technical feasibility, suitability, reasonableness, comprehensiveness and acceptability of the proposed ECMs, including the proposed equipment and level of quality of the equipment for the proposed savings.	60
Proposal includes additional ECMs not already included in the project.	30
Energy Audit	**50**
Proposal clearly and thoroughly describes the scope of the Energy Audit, including systems covered, personnel, methodology and schedule milestones.	20
Proposal thoroughly discusses how the Proposer's approach to the Energy Audit will comply with DGS' Energy Audit format.	5
Proposer clearly and thoroughly describes a reasonable and transparent approach to pricing the costs to prepare an Energy Audit for this project.	25
Costs	**200**
Degree to which the proposed energy analysis demonstrates sound engineering principles and the reasonableness of the proposed savings.	75
Proposer established a reasonable cost for preparing an Energy Audit for this scope of work in compliance with the methodology discussed in the Cost Submission. Proposer thoroughly discussed and supported their cost during the interview.	75
Proposal provides annual financial projections for the length of the contract and each projection appears in the proper format listed in the RFP.	50
Measurement and Verification	**50**
Degree to which the proposed Measurement & Verification (M&V) plan adheres to all M&V protocol standards and demonstrates scalability for measurement and verification of the proposed energy baseline, adjustment factors and energy cost savings.	10
Proposal clearly and thoroughly describes a reasonable and transparent approach to pricing the costs to measure and verify the guaranteed savings for the entire duration of the project.	20
Proposal clearly indicates the M&V pricing is premised upon design and construction in compliance with DGS' Design Manual and General Conditions and also in compliance with the International Performance Measurement and Verification Protocol (IPMVP).	10
Proposal thoroughly describes the methods, schedule, scope and personnel who will be performing the Measurement & Verification.	10
Total	**500**

Appendix F

Standard Contract Provisions

Standard Contract Provisions

RIGHT TO KNOW LAW
NONDISCRIMINATION / SEXUAL HARASSMENT CLAUSE
AMERICANS WITH DISABILITIES ACT
CONTRACTOR INTEGRITY PROVISIONS
CONTRACTOR RESPONSIBILITY PROVISIONS
TAX LIABILITY CERTIFICATION
STEEL PRODUCTS PROCUREMENT ACT
ENVIRONMENTAL STATEMENT

RIGHT TO KNOW LAW

1. The PA Right-to-Know Law, 65 P.S. §§ 67.101-3104, applies to this Audit Contract.

2. Unless the Small GESA Contractor provides the Commonwealth, in writing, with the name and contact information of another person, the agency shall notify the Small GESA Contractor using the Small GESA Contractor information provided by the Small GESA Contractor in SRM [*or* "the legal contact information provided in this Contract"] if the agency needs the Small GESA Contractor's assistance in any matter arising out of the Right to Know Law ("RTKL"). The Small GESA Contractor shall notify the agency in writing of any change in the name or the contact information within a reasonable time prior to the change.

3. Upon notification from the Commonwealth that the Commonwealth requires the Small GESA Contractor's assistance in responding to a RTKL request for records in the Small GESA Contractor's possession, the Small GESA Contractor shall provide the Commonwealth, within fourteen (14) calendar days after receipt of such notification, access to, and copies of, any document or information in the Small GESA Contractor's possession which arises out of the Contract that the Commonwealth requests ("Requested Information") and provide such other assistance as the Commonwealth may request in order to comply with the RTKL. If the Small GESA Contractor fails to provide the Requested Information within fourteen (14) calendar days after receipt of such request, the Small GESA Contractor shall indemnify and hold the Commonwealth harmless for any damages, penalties, detriment or harm that the Commonwealth may incur as a result of the Small GESA Contractor's failure, including any statutory damages assessed against the Commonwealth.

4. The Commonwealth's determination as to whether the Requested Information is a public record is dispositive of the question as between the parties. Small GESA Contractor agrees not to challenge the Commonwealth's decision to deem the Requested Information a Public Record. If the Small GESA Contractor considers the Requested Information to include a request for a Trade Secret or Confidential Proprietary Information, as those terms are defined by the RTKL, the Small GESA Contractor will immediately notify the Commonwealth, and will provide a written statement signed by a representative of the Small GESA Contractor explaining why the requested material is exempt from public disclosure under the RTKL within seven (7) calendar days of receiving the request. If, upon review of the Small GESA Contractor written statement, the Commonwealth still decides to provide the Requested Information, Small GESA Contractor will not challenge or in any way hold the Commonwealth liable for such a decision.

5. The Commonwealth will reimburse the Small GESA Contractor for any costs associated with complying with this provision only to the extent allowed under the fee schedule established by

the Office of Open Records or as otherwise provided by the RTKL if the fee schedule is inapplicable.

6. Small GESA Contractor agrees to abide by any decision to release a record to the public made by the Office of Open Records, or by the Pennsylvania Courts. The Small GESA Contractor agrees to waive all rights or remedies that may be available to it as a result of the Commonwealth's disclosure of Requested Information pursuant to the RTKL. Small GESA Contractor's duties relating to the RTKL are continuing duties that survive the expiration of this Contract and shall continue as long as the Small GESA Contractor has Requested Information in its possession.

NONDISCRIMINATION/SEXUAL HARASSMENT CLAUSE

During the term of this Contract, Small GESA Contractor agrees as follows:

1. In the hiring of any employee(s) for the manufacture of supplies, performance of work, or any other activity required under the contract or any subcontract, the Contractor, each subcontractor, or any person acting on behalf of the Contractor or subcontractor shall not discriminate in violation of the Pennsylvania Human Relations Act (PHRA) and applicable federal laws against any citizen of this Commonwealth who is qualified and available to perform the work to which the employment relates.

2. Neither the Contractor nor any subcontractor nor any person on their behalf shall in any manner discriminate in violation of the PHRA and applicable federal laws against or intimidate any employee involved in the manufacture of supplies, the performance of work, or any other activity required under the contract.

3. The Contractor and each subcontractor shall establish and maintain a written nondiscrimination and sexual harassment policy and shall inform their employees of the policy. The policy must contain a provision that sexual harassment will not be tolerated and employees who practice it will be disciplined. Posting this Nondiscrimination/Sexual Harassment clause conspicuously in easily-accessible and well-lighted places customarily frequented by employees and at or near where the contract services are performed shall satisfy this requirement.

4. The Contractor and each subcontractor shall not discriminate in violation of PHRA and applicable federal laws against any subcontractor or supplier who is qualified to perform the work to which the contract relates.

5. The Contractor and each subcontractor represents that it is presently in compliance with and will maintain compliance with all applicable federal, state, and local laws and regulations relating to nondiscrimination and sexual harassment. The Contractor and each subcontractor further represents that it has filed a Standard Form 100 Employer Information Report ("EEO-1") with the U.S. Equal Employment Opportunity Commission ("EEOC") and shall file an annual EEO-1 report with the EEOC as required for employers subject to Title VII of the Civil Rights Act of 1964, as amended, that that have 100 or more employees and employers that have federal government contracts or first-tier subcontracts and have 50 or more employees. The Contractor and each subcontractor shall, upon request and within the time periods requested by the Commonwealth, furnish all necessary employment documents and records, including EEO-1 reports, and permit access to their books, records, and accounts by the contracting agency and the Bureau of Small Business Opportunities (BSBO), for purpose of ascertaining compliance with provisions of this Nondiscrimination/Sexual Harassment Clause.

6. The contractor shall include the provisions of this Nondiscrimination/Sexual Harassment Clause in every subcontract so that those provisions applicable to subcontractors will be binding upon each subcontractor.

7. The Contractor's and each subcontractor's obligations pursuant to these provisions are ongoing from and after the effective date of the contract through the termination date thereof. Accordingly, the Contractor and each subcontractor shall have an obligation to inform the Commonwealth if, at any time during the term of the contract, it becomes aware of any actions or occurrences that would result in violation of the provisions.

8. The Commonwealth may cancel or terminate the contract and all money due or to become due under the contract may be forfeited for the violation of the terms and conditions of this Nondiscrimination/Sexual Harassment Clause. In addition, the agency may proceed with debarment or suspension and may place the Contractor in the Contractor Responsibility File.

AMERICANS WITH DISABILITIES ACT

During the term of this contract, Contractor agrees as follows:

1. Pursuant to federal regulations promulgated under the authority of The Americans with Disabilities Act, 28 C.F.R. § 35.101 et seq., the Contractor understands and agrees that no individual with a disability shall, on the basis of the disability, be excluded from participation in this contract or from activities provided for under this contract. As a condition of accepting and executing this contract, the contractor agrees to comply with the "General Prohibitions Against Discrimination," 28 C.F.R. § 35.130, and all other regulations promulgated under Title II of The Americans with Disabilities Act which are applicable to all benefits, services, programs, and activities provided by the Commonwealth through contracts with outside contractors.

2. The Contractor shall be responsible for and agrees to indemnify and hold harmless the Commonwealth from all losses, damages, expenses, claims, demands, suits, and actions brought by any party against the Commonwealth as a result of the Contractor's failure to comply with the provisions of paragraph 1 above.

CONTRACTOR INTEGRITY PROVISIONS

It is essential that those who seek to contract with the Commonwealth of Pennsylvania ("Commonwealth") observe high standards of honesty and integrity. They must conduct themselves in a manner that fosters public confidence in the integrity of the Commonwealth contracting and procurement process.

1. DEFINITIONS. For purposes of these Contractor Integrity Provisions, the following terms shall have the meanings found in this Section:

   A. "Affiliate" means two or more entities where (a) a parent entity owns more than fifty percent of the voting stock of each of the entities; or (b) a common shareholder or group of shareholders owns more than fifty percent of the voting stock of each of the entities; or (c) the entities have a common proprietor or general partner.

   B. "Consent" means written permission signed by a duly authorized officer or employee of the Commonwealth, provided that where the material facts have been disclosed, in writing, by prequalification, bid, proposal, or contractual terms, the Commonwealth shall be deemed to have consented by virtue of the execution of this contract.

C. “Contractor” means the individual or entity, that has entered into this contract with the Commonwealth.

D. “Contractor Related Parties” means any affiliates of the Contractor and the Contractor’s executive officers, Pennsylvania officers and directors, or owners of 5 percent or more interest in the Contractor.

E. “Financial Interest” means either:

i. Ownership of more than a five percent interest in any business; or

ii. Holding a position as an officer, director, trustee, partner, employee, or holding any position of management.

F. “Gratuity” means tendering, giving, or providing anything of more than nominal monetary value including, but not limited to, cash, travel, entertainment, gifts, meals, lodging, loans, subscriptions, advances, deposits of money, services, employment, or contracts of any kind. The exceptions set forth in the Governor’s Code of Conduct, Executive Order 1980-18, the 4 Pa. Code §7.153(b), shall apply.

G. “Non-bid Basis” means a contract awarded or executed by the Commonwealth with Contractor without seeking bids or proposals from any other potential bidder or offeror.

2. In furtherance of this policy, Contractor agrees to the following:

A. Contractor shall maintain the highest standards of honesty and integrity during the performance of this contract and shall take no action in violation of state or federal laws or regulations or any other applicable laws or regulations, or other requirements applicable to Contractor or that govern contracting or procurement with the Commonwealth.

B. Contractor shall establish and implement a written business integrity policy, which includes, at a minimum, the requirements of these provisions as they relate to the Contractor activity with the Commonwealth and Commonwealth employees and which is made known to all Contractor employees. Posting these Contractor Integrity Provisions conspicuously in easily-accessible and well-lighted places customarily frequented by employees and at or near where the contract services are performed shall satisfy this requirement.

C. Contractor, its affiliates, agents, employees and anyone in privity with Contractor shall not accept, agree to give, offer, confer, or agree to confer or promise to confer, directly or indirectly, any gratuity or pecuniary benefit to any person, or to influence or attempt to influence any person in violation of any federal or state law, regulation, executive order of the Governor of Pennsylvania, statement of policy, management directive or any other published standard of the Commonwealth in connection with performance of work under this contract, except as provided in this contract.

D. Contractor shall not have a financial interest in any other contractor, subcontractor, or supplier providing services, labor, or material under this contract, unless the financial interest is disclosed to the Commonwealth in writing and the Commonwealth consents to Contractor’s financial interest prior to Commonwealth execution of the contract.

Contractor shall disclose the financial interest to the Commonwealth at the time of bid or proposal submission, or if no bids or proposals are solicited, no later than Contractor's submission of the contract signed by Contractor.

E. Contractor certifies to the best of its knowledge and belief that within the last five (5) years Contractor or Contractor Related Parties have not:

i. been indicted or convicted of a crime involving moral turpitude or business honesty or integrity in any jurisdiction;

ii. been suspended, debarred or otherwise disqualified from entering into any contract with any governmental agency;

iii. had any business license or professional license suspended or revoked;

iv. had any sanction or finding of fact imposed as a result of a judicial or administrative proceeding related to fraud, extortion, bribery, bid rigging, embezzlement, misrepresentation or anti-trust; and

v. been, and is not currently, the subject of a criminal investigation by any federal, state or local prosecuting or investigative agency and/or civil anti-trust investigation by any federal, state or local prosecuting or investigative agency.

If Contractor cannot so certify to the above, then it must submit along with its bid, proposal or contract a written explanation of why such certification cannot be made and the Commonwealth will determine whether a contract may be entered into with the Contractor. The Contractor's obligation pursuant to this certification is ongoing from and after the effective date of the contract through the termination date thereof. Accordingly, the Contractor shall have an obligation to immediately notify the Commonwealth in writing if at any time during the term of the contract if becomes aware of any event which would cause the Contractor's certification or explanation to change. Contractor acknowledges that the Commonwealth may, in its sole discretion, terminate the contract for cause if it learns that any of the certifications made herein are currently false due to intervening factual circumstances or were false or should have been known to be false when entering into the contract.

F. Contractor shall comply with the requirements of the Lobbying Disclosure Act (65 Pa.C.S. §13A01 et seq.) regardless of the method of award. If this contract was awarded on a Non-bid Basis, Contractor must also comply with the requirements of the Section 1641 of the Pennsylvania Election Code (25 P.S. §3260a).

G. When Contractor has reason to believe that any breach of ethical standards as set forth in law, the Governor's Code of Conduct, or these Contractor Integrity Provisions has occurred or may occur, including but not limited to contact by a Commonwealth officer or employee which, if acted upon, would violate such ethical standards, Contractor shall immediately notify the Commonwealth contracting officer or the Office of the State Inspector General in writing.

H. Contractor, by submission of its bid or proposal and/or execution of this contract and by the submission of any bills, invoices or requests for payment pursuant to the contract,

certifies and represents that it has not violated any of these Contractor Integrity Provisions in connection with the submission of the bid or proposal, during any contract negotiations or during the term of the contract, to include any extensions thereof. Contractor shall immediately notify the Commonwealth in writing of any actions for occurrences that would result in a violation of these Contractor Integrity Provisions. Contractor agrees to reimburse the Commonwealth for the reasonable costs of investigation incurred by the Office of the State Inspector General for investigations of the Contractor's compliance with the terms of this or any other agreement between the Contractor and the Commonwealth that results in the suspension or debarment of the Contractor. Contractor shall not be responsible for investigative costs for investigations that do not result in the Contractor's suspension or debarment.

I. Contractor shall cooperate with the Office of the State Inspector General in its investigation of any alleged Commonwealth agency or employee breach of ethical standards and any alleged Contractor non-compliance with these Contractor Integrity Provisions. Contractor agrees to make identified Contractor employees available for interviews at reasonable times and places. Contractor, upon the inquiry or request of an Inspector General, shall provide, or if appropriate, make promptly available for inspection or copying, any information of any type or form deemed relevant by the Office of the State Inspector General to Contractor's integrity and compliance with these provisions. Such information may include, but shall not be limited to, Contractor's business or financial records, documents or files of any type or form that refer to or concern this contract. Contractor shall incorporate this paragraph in any agreement, contract or subcontract it enters into in the course of the performance of this contract/agreement solely for the purpose of obtaining subcontractor compliance with this provision. The incorporation of this provision in a subcontract shall not create privity of contract between the Commonwealth and any such subcontractor, and no third party beneficiaries shall be created thereby.

J. For violation of any of these Contractor Integrity Provisions, the Commonwealth may terminate this and any other contract with Contractor, claim liquidated damages in an amount equal to the value of anything received in breach of these Provisions, claim damages for all additional costs and expenses incurred in obtaining another contractor to complete performance under this contract, and debar and suspend Contractor from doing business with the Commonwealth. These rights and remedies are cumulative, and the use or non-use of any one shall not preclude the use of all or any other. These rights and remedies are in addition to those the Commonwealth may have under law, statute, regulation, or otherwise.

CONTRACTOR RESPONSIBILITY PROVISIONS

For the purpose of these provisions, the term contractor is defined as any person, including, but not limited to, a bidder, offeror, loan recipient, grantee or lessor, who has furnished or performed or seeks to furnish or perform, goods, supplies, services, leased space, construction or other activity, under a contract, grant, lease, purchase order or reimbursement agreement with the Commonwealth of Pennsylvania (Commonwealth). The term contractor includes a permittee, licensee, or any agency, political subdivision, instrumentality, public authority, or other public entity in the Commonwealth.

1. The Contractor certifies, in writing, for itself and its subcontractors required to be disclosed or approved by the Commonwealth, that as of the date of its execution of this Bid/Contract, that neither the Contractor, nor any such subcontractors, are under suspension or debarment by the Commonwealth or any governmental entity, instrumentality, or authority and, if the Contractor cannot so certify, then it agrees to submit, along with its Bid/Contract, a written explanation of why such certification cannot be made.

2. The Contractor also certifies, in writing, that as of the date of its execution of this Bid/Contract it has no tax liabilities or other Commonwealth obligations, or has filed a timely administrative or judicial appeal if such liabilities or obligations exist, or is subject to a duly approved deferred payment plan if such liabilities exist.

3. The Contractor's obligations pursuant to these provisions are ongoing from and after the effective date of the Contract through the termination date thereof. Accordingly, the Contractor shall have an obligation to inform the Commonwealth if, at any time during the term of the Contract, it becomes delinquent in the payment of taxes, or other Commonwealth obligations, or if it or, to the best knowledge of the Contractor, any of its subcontractors are suspended or debarred by the Commonwealth, the federal government, or any other state or governmental entity. Such notification shall be made within 15 days of the date of suspension or debarment.

4. The failure of the Contractor to notify the Commonwealth of its suspension or debarment by the Commonwealth, any other state, or the federal government shall constitute an event of default of the Contract with the Commonwealth.

5. The Contractor agrees to reimburse the Commonwealth for the reasonable costs of investigation incurred by the Office of State Inspector General for investigations of the Contractor's compliance with the terms of this or any other agreement between the Contractor and the Commonwealth that results in the suspension or debarment of the contractor. Such costs shall include, but shall not be limited to, salaries of investigators, including overtime; travel and lodging expenses; and expert witness and documentary fees. The Contractor shall not be responsible for investigative costs for investigations that do not result in the Contractor's suspension or debarment.

6. The Contractor may obtain a current list of suspended and debarred Commonwealth contractors by either searching the Internet at http://www.dgs.state.pa.us/ or contacting the:

Department of General Services
Office of Chief Counsel
603 North Office Building
Harrisburg, PA 17125
Telephone No: (717) 783-6472
FAX No: (717) 787-9138

TAX LIABILITY CERTIFICATION

The Small GESA Contractor, by execution of the Audit Contract:

1. Certifies that the Contractor has no outstanding tax liability to the Commonwealth of Pennsylvania;

2. Authorizes the Department of Revenue to release information related to it's tax liability to the Department of General Services; and

3. Authorizes the Commonwealth to set off any state and local tax liabilities of the Contractor or any of its subsidiaries, as well as any other amount due to the Commonwealth from the Contractor, not being contested on appeal by the Contractor, against any payment due to the Contractor under a contract with the Commonwealth.

The certification of no outstanding tax liability is a material representation of fact upon which reliance is placed by the Department in entering into the contract. If it is later determined that the Contractor knowingly rendered an erroneous certification, the Department may find the Contractor in default and terminate the contract. Such erroneous certification may also be grounds for the initiation of civil or criminal proceedings.

STEEL PRODUCTS PROCUREMENT ACT – CERTIFICATIONS

1. In accordance with the Steel Products Procurement Act of March 3, 1978, P.L. 6 as amended (73 P.S. Sections 1881 et seq.), only steel products as defined in the Act shall be used or supplied in the performance of the contract or any subcontracts thereunder.

2. In the performance of the Contract the Contractor, subcontractors, material men or suppliers shall use only: 1) steel products, rolled, formed, shaped, drawn, extruded, forged, cast, fabricated, or otherwise similarly processed by a combination of two or more of such operations, from steel made in the United States by the open hearth, basic oxygen, electric furnace, bessemer or other steel making process; and 2) cast iron products made in the United States.

3. The Contractor shall certify that all steel and cast iron products to be used or supplied in the performance of the Contract comply with this Act. No payment will be made to the Contractor for steel and cast iron products until such certification has been received.

4. This section shall not apply in any case where the Deputy Secretary for Public Works of the Department, in writing, determines that steel and/or cast iron products as herein described are not produced in the United States in sufficient quantities to meet the Contract needs.

5. The Department shall not provide for, or make any payments to any person who has not complied with the Act. Any such payments made by the Department to anyone that should not have been made as a result of the Act, shall be recoverable directly from the Contractor, subcontractor, manufacturer or supplier that did not comply with the Act.

6. In addition to the withholding of payments, any person who willfully violates any of the provisions of the Act shall be prohibited from submitting any bids to any public agency for a period of five (5) years from the date of the determination that a violation has occurred. In the event the person who violates the provisions of the Act is a subcontractor, manufacturer or supplier, such person shall be prohibited from performing any work or supplying any materials to a public agency for a period of five (5) years from the date of the determination that a violation has occurred.

7. The Contractor shall include the provisions of the Steel Products Procurement Act in every subcontract and supply contract, so that the provisions of the Act shall be binding upon each subcontractor and supplier.

8. Where trade names, catalog numbers and manufacturers of material or equipment are specified, they are mentioned therein for the purpose of establishing a standard of quality, performance and appearance, and for establishing a standard of competitive bidding. The use of this descriptive information will not relieve the contractor from compliance with all aspects of the Act.

ENVIRONMENTAL STATEMENT

1. According to the Commonwealth Procurement Code, Act of May 15, 1998, P.L. 358, No. 57, 62 Pa. C.S. §§ 101-4509, all Requests for Proposals for construction projects issued by any government agency shall set forth any provision of Federal and State statutes, rules and regulations dealing with the prevention of environmental pollution and the preservation of public natural resources that affect the projects.

2. The Small GESA Contractor is hereby notified that this Project is subject to those statutes, rules and regulations shown on the following list, and the Work must be carried out in compliance with these statutes, rules and regulations.

STATE LAW

I. Purdon's Statutes - Title 3 (Agriculture)

Fertilizer Act, Act of Dec. 13, 2001, 3 Pa. C.S.A. § 6701, et seq.

Soil and Plant Amendment Act, Act of Dec. 13, 2001, 3 Pa. C.S.A. § 6901, et seq.

PA Pesticide Control Act of 1973, Act of March 1, 1974 as amended, 3 P.S. § 111.21, et seq.

Agricultural Liming Materials Act, Act of March 17, 1978, as amended, 3 P.S. § 132-1, et seq.

The PA Plant Pest Act of 1992, Act of December 16, 1992 as amended, 3 P.S. § 258.1, et seq.

Noxious Weed Control Law, Act of April 7, 1982 as amended, 3 P.S. § 255.1, et seq.

Conservation District Law, Act of May 15, 1945 as amended, 3 P.S. § 849, et seq.

(Relating to weather modification), Act of January 19, 1968, as amended, 3 P.S. § 1101, et seq.

II. Purdon's Statutes - Title 16 (Counties)

(Relating to land use), Act of January 13, 1966 as amended, 16 P.S. § 11941, et seq.

III. Purdon's Statutes - Title 18 (Crimes and Offenses)

The Crimes Code, Act of December 6, 1972, as amended, 18 Pa. C.S.A. § 101, et seq.

IV. Purdon's Statutes - Title 24 (Education)

Public School Code of 1949, Act of March 10, 1949, as amended, 24 P.S. § 7-731, et seq.

V. Purdon's Statutes - Title 30 (Fish)

The Fish and Boat Code, Act of October 16, 1980, as amended, 30 Pa. C.S.A. § 101, et seq.

VI. Purdon's Statutes - Title 32 (Forests, Waters and State Parks)

(Relating to water power and water supply permits), Act of June 14, 1923, as amended, 32 P.S. § 591, et seq.

Water Well Drillers License Act, Act of May 29, 1956, as amended, 32 P.S. § 645.1, et sec.

(Relating to Flood Control Districts), Act of August 7, 1936, as amended, 32 P.S. § 653, et seq.

Flood Plain Management Act, Act of October 4, 1978, as amended, 32 P.S. § 679.101, et seq.

Storm Water Management Act, Act of October 4, 1978, as amended, 32 P.S. § 680.1, et seq.

Dam Safety and Encroachments Act, Act of November 26, 1978, as amended, 32 P.S. § 693.1, et seq.

(Relating to Stream Clearance), Act of June 5, 1947, as amended, 32 P.S. § 701, et seq.

(Relating to Potomac River Pollution), Act of May 29, 1945 (P.L. 1134, § 1), as amended, 32 P.S. 741 et seq. *Repealed in Part*. Section 4 of Act 1981, May 1, P.L. 22 No. 9, repeals this section to "the extent it required one of the members of the Interstate Commission on the Potomic River Basin to be a member of the Pennsylvania Commission on Interstate Cooperation."

(Relating to Schuylkill River pollution), Act of June 4, 1945, as amend., 32 P.S. § 751.1, et seq.

(Relating to Delaware River pollution) Act of April 19, 1945 as amend.32 P.S. § 815.31, et seq.

Delaware River Basin Compact, Act of July 7, 1961, as amended, 32 P.S. § 815.101, et seq.

Ohio River Valley Water Sanitation Compact, Act of April 2, 1945, as amended, 32 P.S. § 816.1, et seq.

Great Lakes Basin Compact, Act of March 22, 1956, as amended, 32 P.S. § 817.1, et seq.

Brandywine River Valley Compact, Act of September 9, 1959, as amend. 32 P.S. § 818, et seq.

Wheeling Creek Watershed Protection and Flood Prevention District Compact, Act of August 2, 1967, as amended, 32 P.S. § 819.1, et seq.

Susquehanna River Basin Compact, Act of July 17, 1968, as amended, 32 P.S. § 820.1, et seq.

Chesapeake Bay Commission Agreement, Act of June 25, 1985, as amended, 32 P.S. § 820.11, et seq.

(Relating to Preservation and Acquisition of Land for Open Space Uses), Act of January 19, 1968, as amended, 32 P.S. § 5001, et seq.

Land and Water Conservation and Reclamation Act, Act of January 19, 1968, § 2), as amended, 32 P.S. § 5101, et seq.

Bluff Recession and Setback Act, Act of May 13, 1980, as amended, 32 P.S. § 5201, et seq.

Wild Resource Conservation Act, Act of June 23, 1982, as amended, 32 P.S. § 5301, et seq.

VII. Purdon's Statutes - Title 34 (Game)

The Game and Wildlife Code, Act of July 8, 1986, as amended, 34 Pa. C.S.A. § 101, et seq.

VIII. Purdon's Statutes - Title 35 (Health and Safety)

(Related to public eating and drinking places), Act of May 23, 1945, as amended, 35 P.S. 655.1 et seq. *Repealed in Part*. Section 6(b) of Act 1994, repealed this section in so far as it is inconsistent with said act (3 Pa. C.S.A. § 6501, et seq.). §§ 655.1 to 655.11. §§ 655.12a to 655.13a repealed by 2010, Nov. 23, P.L. 1039, No.106, § 8(2)(ii), effective in 60 days [Jan.24, 2011]

The Public Bathing Law, Act of June 23, 1931, as amended, 35 P.S. § 672, et seq.

The Clean Streams Law (Related to the protection of public water supply), Act of June 22, 1937, as amended, 35 P.S. § 691.1, et seq.

PA Safe Drinking Water Act, Act of May 1, 1984, as amended, 35 P.S. § 721.1, et seq.

PA Sewage Facilities Act, Act of January 24, 1966 as amended, 35 P.S. § 750.1, et seq. Repealed in Part. Section 15 of Act 1990, July 1, repealed this section insofar as it relates to fee payments.

PA Solid Waste-Resource Recovery Development Act, Act of July 20, 1974, as amended, 35 P.S. § 755.1, et seq.

(Related to pollution from abandoned coal mines), Act of December 15, 1965 as amended, 35 P.S. § 760.1, et seq.

Low-Level Radioactive Waste Disposal Act, Act of February 9, 1988, as amended, 35 P.S. § 7130.101, et seq.

(Related to Camp Regulation), Act of November 10, 1959 as amended 35 P.S. § 3001, et seq.

Air Pollution Control Act, Act of January 8, 1960, as amended 35 P.S. § 4001, et seq.

Solid Waste Management Act, Act of July 7, 1980 as amended, 35 P.S. § 6018.101, et seq. *Repealed in Part*. Section 905(b) of Act 1988, Feb. 9, the Low-Level Radioactive Waste Disposal Act (35 P.S. § 7130.101, et seq.), repealed this section insofar as it is inconsistent with said act.

Radiation Protection Act, Act of July 10, 1984, as amended, 35 P.S. 7110.101, et seq. *Repealed in Part*. Section 17(b) of Act 1992, Dec. 18, provides that this section is repealed insofar as it is inconsistent with said act. Section 6(3) of 2007, July 13, P.L. 95, No. 31, imd. Effective, provides that "[a]ll other acts and parts of acts are repealed insofar as they are inconsistent with this act.

Worker and Community Right-to-Know Act, Act of October 5, 1984 as amended, 35 P.S. § 7301, et seq.

IX. Purdon's Statutes - Title 36 (Highways and Bridges)

State Highway Law, Act of June 1, 1945, as amended, 36 P.S. § 670-101, et seq. *Repealed in Part*. Section 4 of Act 1985, July 3, repealed this act insofar as it's inconsistent with said act.

Junkyards and Automotive Recycler Screen Law, Act of July 28, 1966, as amended, 36 P.S. § 2719.1, et seq.

Highway Vegetation Control Act of December 20, 1983 as amended, 36 P.S. § 2720.1, et seq.

X. Purdon's Statutes – Title 37 APPENDIX (Historical & Museums)

History Code, Act of May 26, 1988, as amd, 37 Pa.C.S.A. § 101, et seq.

XI. Purdon's Statutes - Title 43 (Labor)

General Safety Law
(Related to General Safety), Act of May 18, 1937, as amended, 43 P.S. § 25-1, et seq.

Seasonal Farm Labor Act, Act of June 23, 1978, as amended, 43 P.S. § 1301.101, et seq.

XII. Purdon's Statutes - Title 52 (Mines and Mining)

Coal Refuse Disposal Control Act of September 24, 1968, as amended, 52 P.S. § 30.51, et seq.

Surface Mine Land Acquisition & Reclamation Law
(Related to Coal Land Improvement), Act of July 19, 1965, as amended, 52 P.S. § 30.101, et seq.

Mine Fire and Subsidence Remedial Project Indemnification Law
(Related to Mine Fires & Subsidence),Act of April 3,1968, as amd. 52 P.S. § 30.201, et seq.

PA Anthracite Coal Mine Act, Act of November 10, 1965 as amended, 52 P.S. § 70-101, et seq.

(Related to discharge of coal into streams), Act of June 27, 1913 as amended, 52 P.S. § 631, et seq.

(Caving-in, Collapse, Subsidence), Act of May 27, 1921, as amended, 52 P.S. § 661, et seq.

Anthracite Coal Mining Regulation Law
(Related to Subsidence), Act of September 20, 1961 as amended, 52 P.S. § 672.1, et seq.

Anthracite Strip Mining and Conservation Act, Act of June 27, 1947 as amended, 52 P.S. § 681.1, et seq. Repealed in Part. Section 16 of Act 1971, Nov. 30, provided that this section repealed insofar as it is inconsistent with Act No. 147.

Anthracite Mine Drainage Law
(Related to control and drainage of water from coal formations), Act of July 7, 1955 as amended, 52 P.S. § 682, et seq.

Bituminous Coal Mine Safety Act, Act of July 7, 2008, 52 P.S. § 690-101, et seq.

(Related to Abandoned Mines – abandoned mines; sealing entries and air shafts), Act of May 7, 1935, as amended, 52 P.S. § 809, et seq.

(Related to maps and plans of mines), Act of June 15, 1911, as amended, 52 P.S. § 823.

Surface Mining Conservation and Reclamation Act, Act of May 31, 1945 as amended, 52 P.S. § 1396.1 et seq. *Repealed in Part*. Section 27 of Act 1984, Dec. 19, provides that, except as provided in § 3304 of this title, this section "is repealed to the extent that it applies to the surface mining of minerals other than bituminous and anthracite coal."

The Bituminous Mine Subsidence and Land Conservation Act, Act of April 27, 1966, as amended, 52 P.S. § 1406.1, et seq

Bituminous Mine Subsidences in Counties of the Second Class. (Related to cave-in or subsidence of surface above mines), Act of July 2, 1937, as amended, 52 P.S. § 1407, et seq.

(Related to Coal Stripping – Coal stripping Operation Defined), Act of June 18, 1941 as amended, 52 P.S. § 1471, et seq.

(Related to Coal under State Lands – Easements and Rights of Way), Act of June 1, 1933 as amended, 52 P.S. § 1501, et seq.

(Related to Mining Safety Zones – Establishment of Safety Zones), Act of Dec. 22, 1959 as amended, 52 P.S. § 3101, et seq. *Repealed in Part* – Act 1959, Dec. 22, P.L. 1994, No. 729 [52 P.S. §§3101 TO 3109], is repealed to the extent applicable to bituminous coal mines by 2008, July 7, P.L. 654, No. 55, §3101(b)(3), effective in 180 days [Jan. 5, 2009]

(Coal and Clay Mine Coal Subsidence Insurance Fund Law), Act of August 23, 1961 as amended, 52 P.S. § 3201, et seq.

Interstate Mining Compact, Act of May 5, 1966 as amended, 52 P.S. § 3251, et seq.

Noncoal Surface Mining Conservation and Reclamation Act, Act of December 19, 1984, as amended, 52 P.S. § 3301, et seq.

XIII. Purdon's Statutes - Title 58 (Oil and Gas)

Oil and Gas Conservation Law, Act of July 25, 1961 as amended, 58 P.S. § 401, et seq.

PA Used Oil Recycling Act, Act of April 9, 1982, as amended, 58 P.S. § 471, et seq.

Coal & Gas Resource Coord.Act, Act of Dec.18, 1984, as amended, 58 P.S. § 501, et seq.

(Relates to oil and gas), Act of February 14, 2012, 58 Pa. C.S.A. § 3201, et seq.

XIV. Purdon's Statutes Title 63 (Professions and Occupations)

Water and Wastewater Systems Operators' Certification Act, Act of November 18, 1968 as amended, 63 P.S. § 1001, et seq.

XV. Purdon's Statutes - Title 64 (Public Lands)

PA Appalachian Trail Act, Act of April 28, 1978, as amended, 64 P.S. § 801, et seq.

XVI. Purdon's Statutes - Title 71 (State Government)

The Administrative Code of 1929, Act of April 9, 1929 as amended, 71 P.S. § 51, et seq.

XVII. Purdon's Statutes - Title 72 (Taxation and Fiscal Affairs)

Project 70 Land Acquisition and Borrowing Act, Act of June 22, 1964 as amended, 72 P.S. § 3946.1, et seq.

(Related to pollution control services), Act of March 4, 1971 as amended, 72 P.S. § 7602.1, et seq. Deleted Section 7602.5 by the Act 2000, May 24. *Repealed in Part.* Section 7602.3 of the Act 2007, Dec. 18, was repealed to effectuate the enactment of 35 P.S. § 6021.4.

XVIII. Purdon's Statutes - Title 73 (Trade and Commerce)

Infrastructure Development Act, Act of July 11, 1996, as amended, 73 P.S. § 393.21, et seq.

(Related to Explosives), Act of July 1, 1937 as amended, 73 P.S. § 151, et seq.; *Suspended in Part*. This section is suspended insofar as it is in conflict with the provisions of Reorganization Plan No. 8 of 1981. *See* 71 P.S. § 751-35.

(Related to Explosives), Act of July 10, 1957 as amended, 73 P.S. § 164, et seq. *Suspended in Part*. Section 164 is suspended insofar as it is in conflict with the provisions of Reorganization Plan No. 8 of 1981. *See* 71 P.S. § 751-35.

Purchase of Black Powder in Contiguous States
(Related to Black Powder), Act of May 31, 1974, 73 P.S. § 169 et seq.
(Related to excavation and demolition), Act of Dec.10, 1974 as amended, 73 P.S. § 176, et seq.

XIX. Purdon's Statutes - Title 75 (Vehicles)

Vehicle Code, Act of June 17, 1976, as amended., 75 Pa. C.S.A. § 101, et seq.
Snowmobile and All-Terrain Vehicle Law, Act of June 17, 1976, as amended, 75 Pa. C.S.A. § 7701, et seq.

(Related to hazardous materials transportation), Act of June 30, 1984, 75 Pa. C.S.A. § 8301, et seq.

XX. Purdon's Statutes - Title 77 (Workmen's Compensation)

Workers' Compensation Act, Act of June 2, 1915 as amended, 77 P.S. § 1, et seq.
PA Occupational Disease Act, Act of June 21, 1939, as amended, 77 P.S. § 1201, et seq.

XXI. Other Statutes

Infectious and Chemotherapeutic Waste Disposal

(Relating to Medical Waste-Manifesting and Transporter Licensing), Act of July 13, 1988, 35 P.S. § 6019.1, et seq.

Municipal Waste Planning, Recycling and Waste Reduction Act, Act of July 28, 1988, 53 P.S. § 4000.1501.

Hazardous Sites Cleanup Act, Act of October 18, 1988, 35 P.S. § 6020.101. Repealed insofar as inconsistent with the Hazardous Sites Cleanup Fund Funding Act, 35 P.S. § 6021.1 ET SEQ., PURSUANT TO 2007, Dec. 18, P.L. 486, No. 77, § 18(b) imd. effective

XXII. Pennsylvania Constitution - Article I, Section 27 (Adopted May 18, 1971)

FEDERAL LAW

Acid Precipitation Act of 1980 (42 U.S.C. § 8901-8912).

Act to Prevent Pollution from Ships (33 U.S.C. § 1901-1915).

Americans with Disabilities Act of 1990, (42 U.S.C. § 12101-12213 and 47 U.S.C. § 225 and 611).

Asbestos Hazard Emergency Response Act of 1986 [see Toxic Substances Control Act secs. 201-214 (15 U.S.C. § 2641-2656)].

Atomic Energy Act of 1954 (42 U.S.C. § 2014, 2021, 2021a, 2022, 2111, 2113, 2114).

Aviation Safety and Noise Abatement Act of 1979 (49 U.S.C. § 47501-47510).

Clean Air Act (42 U.S.C. § 7401-7642).

Clean Water Act [see Federal Water Pollution Control Act].

Coastal Zone Management Act of 1972 (16 U.S.C. § 1451-1466).

Comp.Env.Response, Compensation, and Liability Act of 1980 (42 U.S.C. § 9601-9675).

Emergency Planning and Community Right-to-Know Act of 1986 (42 U.S.C. § 11001-11050).

Energy Supply and Environmental Coordination Act of 1974 (15 U.S.C. § 791-798).

Environmental Quality Improvement Act of 1970 (42 U.S.C. § 4371-4375).

Federal Insecticide, Fungicide, and Rodenticide Act (7 U.S.C. § 136-136y).

Federal Land Policy and Management Act of 1976 (43 U.S.C. § 1701-1784).

Federal Water Pollution Control Act (33 U.S.C. § 1251-1387).

Geothermal Energy R& Development, Demonstration Act of 1974 (30 U.S.C. § 1101-1164).

Global Climate Protection Act of 1987 (15 U.S.C. § 2901 note).

Hazardous Substance Response Revenue Act 1980 (see 26 U.S.C. § 4611, 4612, 4661, 4662).

Low-Level Radioactive Waste Policy Act (42 U.S.C. § 2021b-2021d).

Marine Protection, Research, and Sanctuaries Act of 1972 (33 U.S.C. § 1401-1445)

National Climate Program Act (15 U.S.C. § 2901-2908).

National Environmental Policy Act of 1969 (42 U.S.C. § 4321-4370h).

Noise Control Act of 1972 (42 U.S.C. § 4901-4918).

Nuclear Waste Policy Act of 1982 (42 U.S.C. § 10101-10270).

Outer Continental Shelf Land Act Amendments of 1978 (43 U.S.C. § 1801-1866).

Public Health Service Act (42 U.S.C. § 300f-300j-11).

Safe Drinking Water Act [Public Health Service Act 1401-1451 (42 U.S.C. § 300f-300j-26)].

Soil and Water Resources Conservation Act of 1977 (16 U.S.C. § 2001-2009).

Solid Waste Disposal Act (42 U.S.C. § 6901-6991i).

Surface Mining Control and Reclamation Act of 1977 (30 U.S.C. § 1201-1328)

Toxic Substances Control Act (15 U.S.C. § 2601-2695d).

Uranium Mill Tailings Radiation Control Act of 1978 (42 U.S.C. § 7901-7942).

Water Resources Research Act of 1984 (42 U.S.C. § 10301-10309).

APPENDIX G

Small GESA Contract with Bond and APG

GUARANTEED ENERGY SAVINGS ACT CONTRACT

FOR A SMALL GESA PROJECT

BETWEEN

THE FUNDING AGENCY,

AND

THE SMALL GESA CONTRACTOR

This Guaranteed Energy Savings Act Contract for a Small GESA Project (hereinafter "The Small GESA Contract"), executed this _____ day of _____, 20____, by and between the *Funding Agency (" ")*, as an executive agency of the Commonwealth of Pennsylvania authorized to enter into Small GESA Contracts pursuant to 62 Pa C. S. §§3751-3758, and

_____

_____

_____

a corporation incorporated under the Laws of the State of _____, its successors and assigns, hereinafter called "the Small GESA Contractor".

OR

This Guaranteed Energy Savings Act Contract for a Small GESA Project (hereinafter "The Small GESA Contract"), executed this _____ day of _____, 20____, by and between the "*Funding Agency* (" ") as an executive agency of the Commonwealth of Pennsylvania authorized to enter into design build contracts pursuant to 62 Pa C. S.

§§3751- 3758, and

_____

_____

_____

their heirs, executors, administrators and assigns, hereinafter called "the Small GESA Contractor".

ARTICLE 1 – THE CONTRACT DOCUMENTS

The Contract Documents shall consist of this Small GESA Contract and all attachments hereto, the Request for Proposal ("the RFP"), the Small GESA Contractor's proposal submitted in response to the RFP, the Contract Bonds, the Conditions of the Contract (General, Special, Supplementary, and other Conditions), all drawings created by or for the Small GESA Contractor and/or their Retained Professional, the specifications created by or for the Small GESA Contractor and/or their Retained Professional, the Scope of Work by ECM (Exhibit 1), all bulletins and addenda issued prior to execution of the Small GESA Contract, all change orders, the Administrative Procedures for the Small GESA Contract, the Installment Purchase Agreement and Payment Schedule, and the Investment Grade Audit Contract, its contract documents, and the Investment Grade Audit Report. All of these documents form the contract and are as fully part of the contract as if attached to this Contract or repeated herein.

ARTICLE 2 – THE WORK

The Small GESA Contractor shall perform all the work required by these Contract Documents as set forth in the RFP for the design and implementation/ construction of

_____.

ARTICLE 3 – TIME OF COMMENCEMENT AND COMPLETION

3.1 The Contract duration for this Small GESA Contract is_____calendar days and shall

commence upon the effective date of the Small GESA Contract. This date shall be defined, pursuant to the terms of the General Conditions of the Small GESA Contract, to be the date upon which the last Commonwealth official who is required to execute the contract executes the contract.

3.2 The format and scope of the Work shall be as set forth in the RFP and the Investment Grade Audit

3.3 Small GESA Contractor further agrees that the time is of the essence on this Small GESA Contract and that if it fails to complete the work within the time specified above, the Small GESA Contractor will pay the Funding Agency, as Liquidated Damages and not as a penalty for such failure, the sum of_____dollars ($ .00) (0.1% x Contract Sum) per day for each and every calendar day after the completion date until the Work is completed and accepted. The DGS may extend the completion date of the GESA Contact for causes set forth in the General Conditions of the Small GESA Contract that, in fact, delay the completion of said work. In such case, Small GESA Contractor is liable for said Liquidated Damages only after the expiration of the extended period.

ARTICLE 4 – CONTRACT SUM

The Funding Agency will authorize an energy financing provider, procured separately, to pay the Small GESA Contractor for the performance of the Work subject to additions and deductions by change order, as provided in the General Conditions of the Small GESA Contract, the contract sum of_____dollars ($_____). Payment will be made as set forth in the General Conditions of the Small GESA Contract. Deductions from or additions to this sum will be made as set forth in the General Conditions of the Small GESA Contract. Funding Agency is not liable for any debt due to the Small GESA Contract.

ARTICLE 5 – PROGRESS PAYMENTS and RETAINAGE

Based upon Applications for Release of Payment submitted to the Funding Agency by the Small GESA Contractor, the Funding Agency will authorize the energy financing provider to release progress payments on account of the contract sum to the Small GESA Contractor, , in accordance with the provisions of the Prompt Payment Schedules found in the Commonwealth Procurement Code, 62 Pa. C.S. §3931-§3939, and the Administrative Procedures, which both are incorporated herein by reference and made a part hereof as if those provisions were fully and at length herein recited, except that, where those provisions refer to the government agency, it is deemed to refer to the Funding Agency. The Funding Agency will retain a portion of the amount due the Small GESA Contractor, to insure the proper performance of the contractor, in each Application for Release of Payment in accordance with the provisions of Retainage found in the Commonwealth Procurement Code, 62 Pa. C.S. §3921, and the General Conditions for Small GESA Projects, which both are incorporated herein by reference and made a part hereof as if those provisions were fully and at length herein recited, except that, where those provisions refer to the government agency, it is deemed to refer to the Funding Agency .

ARTICLE 6 – FINAL PAYMENT

Final Payment, constituting the entire unpaid balance of the Contract Sum, will be approved by the Funding Agency for release by the energy financing provider to the Small GESA Contractor within thirty (30) days after Closeout Inspection of the Work if the Small GESA Contract has been fully performed and a Final Application for Release of Payment has been submitted, as provided in the General Conditions of the Small GESA Contract.

ARTICLE 7 – SMALL DIVERSE BUSINESS PARTICIPATION

The Small GESA Contractor provided its Small Diverse Business (i.e., Minority Business Enterprises (MBEs), Women Business Enterprises (WBEs), Veteran Business Enterprises (VBEs), and Service-Disabled Veteran Business Enterprises (SDVBEs) (together referred to hereinafter as Small Diverse Businesses)) percentage for Small Diverse Business subcontracts, suppliers, and manufacturers for this project in the Small GESA Contractor's RFP Proposal. The Small GESA Contractor's Small Diverse Business percentage per ECM is included on Exhibit 1.

ARTICLE 8 – MISCELLANEOUS PROVISIONS

8.1 Terms used in this Small GESA Contract defined in the General Conditions of the Small GESA Contract have the meanings designated in those Conditions.

8.2 In addition to any other guarantees or warrantees, the Small GESA Contractor covenants and agrees, after acceptance of the Work performed under this Small GESA Contract, to remedy without cost to the Funding Agency, any such defect in the Work provided said defects in the judgment of the Funding Agency, or its successors having jurisdiction over the premises, are caused by defective or inferior materials, equipment or workmanship. If the corrective work is not completed within thirty (30) days after the notification by the Funding Agency to the Small GESA Contractor, the Funding Agency may do the work and submit those costs to the Surety Company for reimbursement.

8.3 The Contract Bonds given by the Small GESA Contractor conditioned upon the faithful performance of the Small GESA Contract and for the payment of labor, material, equipment and public utility service claims are attached to this Small GESA Contract and are made a part of it. No third party shall acquire any rights against the Funding Agency under the Contract Documents.

8.4 The Small GESA Contractor agrees to abide by and be bound by the Laws of

Pennsylvania including those relating to and regulating the hours and conditions of employment.

8.5 Nothing in this Small GESA Contract shall be deemed to waive or otherwise affect the sovereign immunity of the Commonwealth, and its agencies, officers, and employees, or to subject any Commonwealth party to any liability not expressly authorized by law.

8.6 Any person, co-partnership, association or corporation furnishing labor, material, equipment or renting equipment or rendering public utility services in connection with the performance of this Small GESA Contract has a right of action to recover the cost thereof from the Small GESA Contractor and the Surety on the Bond given to secure the payment of such labor, material, equipment or equipment rental and services rendered by public utility as though such person or corporation had been named as Obligee in such Bond. For those who do not have a contract directly with the Small GESA Contractor, this right of action may not be exercised unless the Small GESA Contractor is notified of the claim within ninety (90) days from the last performance of labor or provision of materials. The Small GESA Contractor shall include in all of its subcontracts or supply contracts a provision requiring that its subcontractors and suppliers notify, in writing, their subcontractors and suppliers of this requirement. It is hereby agreed that no third party rights arise against the Funding Agency for any reason under this Article, and the Small GESA Contractor hereby agrees to so inform all subcontractors and suppliers in writing.

8.7 This Small GESA Contract may be executed in one or counterparts, each of which is an original, and all of which together are a single contract.

ARTICLE 9 – CONTRACT COMPLIANCE REGULATIONS

Refer to the appropriate paragraph of the General Conditions of the Small GESA Contract (which are made a part of this Contract by incorporation by reference as if fully set forth herein), which prohibits discrimination in hiring or employment opportunities. Also made a part of this Contract by incorporation by reference are all State and Federal Laws prohibiting discrimination in hiring or employment opportunities. The Contract Documents also list applicable statutory provisions which are incorporated by reference into this Small GESA Contract as if set forth fully herein.

ARTICLE 10 – ASSURED PERFORMANCE GUARANTEE

The Small GESA Contractor is required to guarantee energy and cost savings stipulated in this Small GESA Contract on an annual basis. The savings must be guaranteed to equal or exceed the project financing payment plus the service fees during that year for the Small GESA Contract duration. No credit for savings above the annual guarantee will be credited toward the performance guarantees for future years of this Small GESA Contract. The recovery of contract costs from energy savings over the term of this Small GESA Contract shall not exceed_____( ) years. Refer to the Assured Performance Guarantee (which is made a part of this Contract by incorporation) for the Small GESA Contractor's requirements regarding documenting and verifying the annual energy and/or cost savings that are attributed to this project. **(Exhibit 2)**

SIGNATURE PAGE IMMEDIATELY FOLLOWS

REMAINDER OF PAGE INTENTIONALLY LEFT

BLANK

IN WITNESS WHEREOF, the Department of _____, the Governor's Office of Budget, the Department of General Services, and the Small GESA Contractor, have caused this contract to be executed on the day and year above written.

Witness: [Small GESA Contractor]

Attest:

_____ _____

Secretary/Treasurer Date:_____ President Date:_____

Witness: COMMONWEALTH OF PENNSYLVANIA
ACTING THROUGH THE DEPARTMENT
OF [Funding Agency]

_____ _____

Date:_____ Secretary of [funding agency] Date:_____

APPROVED AS TO LEGALITY
AND FORM

I hereby certify that funds in the amount of
$_____
Are available under Appropriation Symbol

_____
Comptroller Operations

_____
Office of Chief Counsel - Funding Agency

_____
Office of General Counsel

_____
Office of Attorney General

CONTRACT BOND

KNOW ALL PERSONS BY THESE PRESENTS, That we the undersigned

_____

_____

_____

as Principal and

_____

_____

_____

as the Surety Company, a Corporation organized and existing under the Laws of the State of _____and authorized to transact business in Pennsylvania, as surety, are held and firmly bound unto the Department of XXXX (as hereinafter set forth, in the full and just several sums of:

(A)_____Dollars

($_____) for faithful performance of the Small GESA Contract as designated in Paragraph "A" below; and

(B)_____Dollars

($_____) for payment for labor, material equipment rental and public utility services as designated in Paragraph "B" below; and

Sealed with our respective seals and dates this_____day of_____.

WHEREAS, the above Principal has entered into a Small GESA Contract with the Department of XXXX dated the_____day of_____, 20__for

_____upon certain terms and conditions in said Small GESA Contract more particularly mentioned; and

WHEREAS, it is one of the conditions of the Award pursuant to which said Small GESA Contract is about to be entered into, that these presents be executed;

NOW, THEREFORE, the joint and several conditions of this obligation are such:

A. That, if the above Principal as Small GESA Contractor shall well and faithfully do and perform the things agreed by it to be done and performed according to the terms of said Contract Documents, including the plans and specifications therein referred to and made part thereof, and such alterations as may be made in said plans and specifications as therein provided and which are hereby made part of this Bond the same as though they were fully set forth herein, and shall indemnify and save harmless the Department of [Funding Agency] and all of their officers, agent and employees from any expense incurred through the failure of said Small GESA Contractor to complete the Work as specified and for any damages growing out of the manner of performance of said Small GESA Contract by said Small GESA Contractor or its Subcontractors, or their agents or servants, including, but not limited to, patent trademark and copyright infringements, then this part of this obligation shall be void; otherwise, it shall be and remain in full force and effect.

B. That, if the above Principal shall and will promptly pay or cause to be paid all sums of money which may be due by the Principal or any of its Subcontractors to any person, co-partnership, association or corporation for all material furnished and labor supplied or performed in the prosecution of the work, whether or not the said material or labor entered into and become component parts of the Work or improvements contemplated, and for rental of equipment used, and services rendered by public utilities in, or in connection with, the prosecution of such Work,

then this part of this obligation shall be void; otherwise, it shall be and remain in full force and effect.

C. It is further agreed that any alterations which may be made in the terms of the Small GESA Contract or in the Work to be done or materials to be furnished or labor to be supplied or performed, or equipment to be rented, or public utility services to be rendered, or the giving by the Department of [Funding Agency] of any extension of time for the performance of the Small GESA Contract, or the reduction of the retained percentage as permitted by the Small GESA Contract, or any other forbearance on the part of either the Department of [Funding Agency] or the Principal to the other, shall not in any way release the Principal and the surety or sureties or either or any of them, their heirs, executors, administrators, successors or assigns, from their liability hereunder; notice to the surety or sureties of any such alterations, extension or forbearance being hereby waived.

D. The Principal and Surety hereby jointly and severally agree with the Department of [Funding Agency] herein that every person, co-partnership, association or corporation which, whether as subcontractor as a person otherwise entitled to the benefits of this Bond, has furnished material or supplied or performed labor or rented equipment used in the prosecution of the Work as above provided and any public utility, which has rendered services, in, or in connection with, the prosecution of such Work, and, which has not been paid in full therefore, may sue in assumpsit on this Bond in his, their, or its name and prosecute the same to final judgment for such sum or sums as may be justly due him, them, or its, and have execution thereon; provided, however, that the Department of [Funding Agency] shall not be liable for the payment of any cost or expenses of such suit to a third party under any theory of law or equity.

E. Recovery by any persons, co-partnership, association or corporation hereunder is subject to the provisions of the Pennsylvania Procurement Code, 62 Pa. C.S §§101-4509, as amended, which Act is incorporated herein and made a part hereof, as fully and completely as though its provisions were fully and at length herein recited, except that, where said Act refers to the Commonwealth of Pennsylvania or a Department thereof, it is deemed to refer to the Department of [Funding Agency].

IN WITNESS WHEREOF, the said Principal and Surety have duly executed this Bond under seal the day and year above written.

Witness:

_____ (Date)

_____
Principal (Date)
[Small GESA Contractor]

(Corporate Seal)

_____
Surety

By:_____
Attorney-in-Fact (Date)

APPROVED AS TO FORM AND LEGALITY

_____
Office of Chief Counsel, Funding Agency

_____
Office of Attorney General

_____
Office of Chief Counsel, DGS

EXHIBIT 1
Scope of Work by ECM
Including
Small Diverse Business Participation

Core Energy Conservation Measures

Note: All items listed below must be considered in the RFP response. For any measure that cannot be incorporated into the proposal or is determined infeasible, a detailed explanation must be provided that clearly outlines the financial and technical rationale behind the choice not to include the measure.

Tom Ridge Environmental Center (TREC)

1. Retrofit the building and parks lighting systems to LED.

2. Correct the excessive negative pressure in observation tower, eliminating or reducing the removal of treated air from within the TREC building.

3. Repair/replace the failed fan powered reheat boxes located in the underfloor plenums.

4. Determine the feasibility of adding individual private office temperature controls in lieu of shared controls.

5. Relocate thermostats located on outside walls to interior spaces. Utilize wireless devices where required.

6. Determine the existence of return air ductwork. If return air ductwork exists, optimize the systems to provide outside air only when occupied and in amounts needed to satisfy ventilation requirements.

7. Evaluate the energy intensive lab equipment and determine if energy saving retrofits are possible; consider flow control fume hoods.

8. Repair/replace the heat recovery wheels and ensure they are operating as designed, or

9. Replace the existing exterior central station air handling units that utilize boiler hot water with new gas-fired equipment and variable outside air controls. This will improve operating efficiency and reduce piping losses.

10. Implement occupied/unoccupied temperature control schedules and ensure the HVAC systems are controlled with setback temperatures and reduced outside air ventilation.

11. Replace the existing boilers with new, high efficiency units. The units are problematic and are likely costing the facility excessive service repair and operating costs. If the AHUs are replaced with gas fired heaters, downsize the boilers to provide only the required capacity for the load served.

Maintenance Building

1. Replace lighting with LED.

2. Install a gas-fired radiant tube heating system or bio mass boiler to eliminate the unit heaters.

3. Replace the existing boiler and add heating controls with occupied/unoccupied schedules.

Presque Isle Park – General

1. Consider LED lighting retrofits to all buildings, structures, and exteriors where lighting is used on a regular schedule.

2. Evaluate the individual wastewater treatment plant energy use and operating costs and determine if enough savings exist to help pay for installing pump stations and piping to a central wastewater treatment plant.

3. Evaluate the economic opportunity for wind power generation.

General ECM for the other Parks and Forestry facilities:

1. Retrofit the buildings, parks forestry lighting systems to LED including lighting controls when applicable.

2. Replace/install/upgrade HVAC controls.

3. Replace pumps/motors when applicable.

Exhibit 2

ASSURED PERFORMANCE GUARANTEE
For
SMALL GESA CONTRACT

1-1. DEFINITIONS

PART 1

For purposes of this Agreement, the following terms have the meanings set forth below:

Annual Project Benefits are the portion of the projected Total Project Benefits to be achieved in any one year of the Guarantee Term.

Annual Project Benefits Realized are the Project Benefits actually realized for any one year of the Guarantee Term.

Annual Project Benefits Shortfall is the amount by which the Annual Project Benefits exceed the Annual Project Benefits Realized in any one year of the Guarantee Term.

Annual Project Benefits Surplus is the amount by which the Annual Project Benefits Realized exceed the Annual Project Benefits in any one year of the Guarantee Term.

Baseline is the mutually agreed upon data and/or usage amounts that reflect conditions prior to the installation of the Energy Conservation Measures.

Guarantee Term will commence on the first day of the month following the Final Payment date and will continue through the duration of the M&V Services.

Installation Period is the period beginning on the effective date of the Small GESA Contract and ending on the commencement of the Guarantee Term.

Measured Project Benefits are the utility savings and cost avoidance calculated in accordance with the methodologies set forth in Part 2 of this Agreement.

Project Benefits are the Measured Project Benefits to be achieved for a particular period during the term of this Agreement.

O&M Benefits are the operations and maintenance cost avoidance savings as stipulated in Part 2 of this Agreement.

Rebate Project Benefits are the energy rebate or incentive non-recurring savings as stipulated in Part 2 of this Agreement.

Total Project Benefits are the projected Project Benefits to be achieved during the entire term of this Agreement.

1-2. SCOPE

A. The Department of [Funding Agency] (“Funding Agency”) is contracting for a full range of energy services and energy-related capital improvements ("Energy Conservation Measures" or "ECMs") at no initial capital cost for the Project. The ECMs may include but are not limited to: the design, acquisition, installation, modification, maintenance and training of funding agency personnel in the operation of existing and new equipment. The ECMs will reduce energy consumption and related costs associated with the heating, ventilation and air conditioning system, lighting systems, control systems, building envelope, the hot water systems, water consumption, sewage costs and other energy using devices. Additionally, savings which will not reduce consumption but are aimed at cost savings, such as fuel switching, demand side management, on-site generation, utility bill auditing, utility rate changes, and distribution upgrades etc. have been considered. ECMs may also include the training of facility staff with respect to routine maintenance and operation of all improvements. ECMs must result in a guaranteed minimum energy savings with payments linked to actual documented energy and cost reductions.

B. Any stipulated energy and/or operational cost savings that are attributed to this project have been rigorously reviewed and the Small GESA Contractor is required by this contract to thoroughly document and verify the savings, which have been approved by DGS and the Funding Agency. The Annual Project Benefits Realized by the ECMs in any year must be guaranteed to equal or exceed the Annual Project Benefits during that year for the duration of the contract. The Small GESA Contractor is required to guarantee energy and cost savings on an annual basis. No credit for the achievement of savings above and beyond the annual guarantee will be credited to satisfy performance guarantees in future years of the contract. Annual reconciliation of the achieved savings will be required.

1-3. MEASUREMENT & VERIFICATION

A. Measurement & Verification (M&V) services shall commence on the first day of the month following the month in which the Funding Agency releases the Final Payment to the Small GESA Contractor and shall continue throughout the Assured Performance Guarantee Term, subject to earlier termination of the Assured Performance Guarantee as provided herein. The Small GESA Contractor shall ensure that an approved representative from the Funding Agency is physically present for all pre-retrofit and post-retrofit measurements for each ECM as applicable to the Energy Savings Guarantee unless the Funding Agency waives their right to be present. The final completion date shall be the date when all Work is completed, including all punch list items, as evidenced by the release of the Final Payment by the Funding Agency. In the event the Funding Agency (i) cancels or terminates receipt of M&V Services, (ii) fails to fulfill any of Funding Agency responsibilities necessary to enable Small GESA Contractor to complete the Work and provide the M&V Services, or (iii) otherwise cancels, terminates or materially breaches this Agreement, Small GESA Contractor shall issue a written notice to the Funding Agency stating the nature of the alleged breach, the date upon which it arose, and the remedy sought. Small GESA Contractor shall provide the Funding Agency with a thirty (30) day period to cure such breach. In the event of a dispute, all parties shall act in good faith to mitigate damages with a reservation of rights as to damages.

B. If the Small GESA Contractor is delayed in the commencement, performance, or completion of the M&V Services by causes beyond its control and without its fault, including but not limited to inability to access property; concealed or unknown conditions encountered at the project, differing from the conditions represented by Funding Agency in the proposal documents or otherwise disclosed by Funding Agency to the Small GESA Contractor; a Force Majeure condition; failure by Funding Agency to perform its obligations under this Small GESA Contract; or failure by Funding Agency to reasonably cooperate with Small GESA Contractor in the timely completion of the M&V Work where such failure is material, substantial and inconsistent with the terms of this Small GESA Contract, Small GESA Contractor shall provide written notice to Funding Agency of the existence, extent of, and reason for such delays and impacts. Under such circumstances, an equitable adjustment in the time for performance and the Assured Performance Guarantee shall be made, subject to the mutual written agreement of the parties.

C. Funding Agency shall provide Small GESA Contractor, its subcontractors, and its agents reasonable and safe access to all facilities and properties in Funding Agency's control that are subject to the M&V Services. Work to be performed by Small GESA Contractor in accordance with this Small GESA Contract shall be performed during normally scheduled staff shifts and as agreed to by both parties. Funding Agency further agrees to assist Small GESA Contractor, its subcontractors, and its agents to gain access to facilities and properties that are not controlled by Funding Agency but are necessary for Small GESA Contractor to provide the M&V Services. An equitable adjustment in the time for performance and Assured Performance Guarantee shall be made as a result of any failure to grant such access, subject to the mutual written agreement of the parties.

D. In order for Small GESA Contractor to perform its obligations under this Agreement with respect to the Work, the Assured Performance Guarantee, and the M&V Services, Funding Agency shall be responsible for:

1. Providing Small GESA Contractor, its subcontractors, and its agents reasonable and safe access to all facilities and properties that are subject to the Work and/or M&V Services;

2. Properly maintaining, and performing appropriate preventative maintenance on, all equipment and building systems affecting the Assured Performance Guarantee in accordance with manufacturers' standards and specifications;

3. Providing the utility bills, reports, and similar information reasonably necessary for administering Small GESA Contractor's obligations under the Assured Performance Guarantee within thirty (30) days of Funding Agency receipt and/or generation or Small GESA Contractor's request therefore;

4. Providing all records relating to energy and/or water usage and related maintenance of the premises and relevant equipment requested by Small GESA Contractor;

5. Promptly notifying Small GESA Contractor of any change in use or condition or any other matter that may impact the Assured Performance Guarantee.

PART 2

PROJECT BENEFITS

2-1. PROJECT BENEFITS SUMMARY

A. Subject to the terms and conditions of this Small GESA Contract, Small GESA Contractor and Funding Agency agree that Funding Agency will be deemed to achieve a total of $_____in O&M and Rebate Project Benefits and Small GESA Contractor guarantees that Funding Agency will achieve a total of $_____in Measured Project Benefits during the term of this Small GESA Contract, for Total Project Benefits of $_____as set forth in the Total Project Benefits table below.

Table A. Total Project Benefits

Year	Guaranteed Energy Cost Savings	Operations & Maintenance Cost Savings	Rebate Project Benefits (non-recurring)	Total Guaranteed Project Savings
1				
2				
3				
4				
5				
Totals				

The energy cost savings provided in **Table A** above are based on the annual escalation stated in **Table A-1** below, and will be applied to the unit utility rates listed in **Table B** beginning the first month following the baseline period, escalating annually throughout the Guarantee Period.

Table A-1 – Annual Escalation Rates

Energy Cost Esc./yr	**1.0%**
Labor Cost Esc./yr	**3.0%**
Maintenance Cost Esc	**1.0%**

The actual escalation of calculated savings that will be applied in the M&V Report will be the highest of:

(1) **Table A-1** above
(2) CPI (Consumer Price Index) for the geographical region, or
(3) Actual fuel rate

B. Within thirty (30) days of the commencement of the Guarantee Term, Small GESA Contractor will calculate the Measured Project Benefits achieved during the Installation

Period and provide the Funding Agency of written confirmation of the calculations.

C. Within thirty (30) days of each anniversary of the commencement of the Guarantee Term, Small GESA Contractor will calculate the Measured Project Benefits achieved for the applicable year applicable to such period and provide both DGS and the Funding Agency with an annual report containing:

1. an executive overview of the project's performance and Project Benefits achieved to date; and
2. a summary analysis of the Measured Project Benefits accounting; and
3. a detailed analysis of the Measured Project Benefits calculations.

D. Funding Agency acknowledges and agrees that if, for any reason, it (i) cancels or terminates receipt of M&V Services, (ii) fails to pay for M&V Services, (iii) fails to fulfill any of its responsibilities necessary to enable Small GESA Contractor to complete the Work and provide the M&V Services, or (iv) otherwise cancels, terminates or materially breaches this Small GESA Contract, the Assured Performance Guarantee shall automatically terminate and Small GESA Contractor shall have no liability hereunder.

2-2. PROJECT SAVINGS SHORTFALLS OR SURPLUSES

A. Guaranteed Savings Shortfalls: If an Annual Project Benefit Shortfall occurs for any year of the Assured Performance Guarantee Term, Small GESA Contractor shall, at the sole discretion of the Funding Agency, perform one or more of the following:

1. pay to Funding Agency the amount of such shortfall, or
2. subject to Funding Agency's written approval, provide to Funding Agency additional products or services, in the value of such shortfall, at no additional cost to Funding Agency.

B. Guaranteed Savings Surpluses: If an Annual Project Benefit Surplus occurs for any year of the Guarantee Term, Small GESA Contractor may not apply the amount of such surplus to set off any subsequent Annual Project Benefit Shortfall during the Guarantee Term.

C. Additional Energy Conservations. Where an Annual Project Benefits Shortfall has occurred, Small GESA Contractor may, subject to Funding Agency approval, implement additional Energy Conservation Measures, at no cost to Funding Agency, which may generate additional Project Benefits in future years of the Guarantee Term. Such improvements do not relieve the Small GESA Contractor from liability set forth in Paragraph 2-2(A).

D. Event of Default by GESA Contractor: If an Annual Project Benefits Shortfall has occurred and the GESA Contractor does not comply with Paragraph 2-2(A), the Funding Agency may deem this to be an Event of Default. If default occurs, the Funding Agency may place the GESA Contractor in the Contractor Responsibility Program and also pursue debarment or suspension in accordance with the Commonwealth Procurement Code.

PART 3

MEASUREMENT AND VERIFICATION METHODOLOGY

3-1. MEASUREMENT & VERIFICATION PROTOCOL

A. Small GESA Contractor shall apply either Option A or Option B or Option C verification methodologies, as more fully detailed in the guidelines and standards of the International Measurement and Verification Protocol (IPMVP) and/or the Federal Energy Management Program (FEMP), in connection with the provision of M&V Services hereunder. The applicable option shall be as set forth in the Project-Specific Request for Proposal submitted to and accepted by DGS and the Funding Agency. Option A shall not be accepted without DGS and the Funding Agency's prior written approval.

Option A: Partially Measured Retrofit Isolation

Measured Project Benefits are determined by partial field measurement of the energy use of the system(s) to which an ECM was applied separate from the energy use of the rest of the facility. Measurements will be short-term with only one-time measurements before and after the Installation Period.

Partial measurement means that some but not all parameters will be measured. Careful review of the design and installation of ECMs is intended to demonstrate that the stipulated values fairly represent the probable actual values. Agreed-upon values will be shown in the measurement and verification plan, along with analysis of the significance of the error they may introduce. Engineering calculations using short-term pre and post-retrofit measurements and stipulations are used to calculate Measured Project Benefits for the duration of the Guarantee Term.

Measured Project Benefits from the following ECMs will be calculated using Option A:
INSERT TABLE WITH ECMS USING OPTION A

Pre & Post Installation Verification Methodology Description
Option A – Water System

The Measurement and Verification Plan for the _____shall be adhered to as indicated in the Energy Audit Report, dated_____, Part IV M&V Plan and Commissioning, Paragraph X– Option A - _____ System.

Option B: Retrofit Isolation

Measured Project Benefits are determined by field measurement of the energy use of the systems to which an Improvement Measure was applied separate from the energy use of the rest of the facility. Short-term, long-term or continuous measurements are taken throughout the pre and post-retrofit periods. Engineering calculations using short term, long-term or continuous pre and post-retrofit measurements are used to calculate the Measured Project Benefits for the duration of the Guarantee Term.

Measured Project Benefits from the following Improvement Measures will be calculated using Option B:

LIST ALL OPTION B ECMS and for each, set forth:

ECM #

Pre-Installation Verification Methodology Description

Post-Installation Verification Methodology Description

CALCULATION OF SAVINGS:

[EQUATIONS / FORMULAE]

Option C: Utility Bill Analysis

Measured Project Benefits involves use of utility meters or whole building sub-meters to assess the energy performance of a total building. Option C assesses the impact of any type of Improvement Measure, but not individually if more than one is applied to an energy meter. This option determines the collective Measured Project Benefits of all Improvement Measures applied to the part of the facility monitored by the energy meter. Also, since whole building meters are used, Measured Project Benefits reported under Option C include the impact of any other change made in facility energy use (positive or negative). Period consumption against baseline consumption will be normalized using weather data. Baseline changes due to any changes in non-routine factors such as building operation and building foot print will be manually adjusted using the savings calculations as presented herein.

Meters Included in Option C:

Building Name / Location	Fuel Type	Account # / Meter #

Measured Project Benefits from the following Improvement Measures will be calculated using Option C:

ECM #

Pre-Installation Verification Methodology Description

Post-Installation Verification Methodology Description

CALCULATION OF SAVINGS:

[EQUATIONS / FORMULAE]

3-2. CHANGES IN USE OR CONDITION

The Changes in Use or Condition shall be as indicated in this Part and not as indicated in Part IV, M&V Plan and Commissioning, Paragraph X of the EAR.

A. Funding Agency agrees to notify Small GESA Contractor within thirty (30) days of (i) any actual or intended change, whether before or during the Guarantee Term, in the use of any facility, equipment, or Energy Conservation Measure to which this schedule applies; (ii) any proposed or actual expansions or additions to the premises or any building or facility at the premises; (iii) a change to utility services to all or any portion of the premises; or (iv) any other change or condition arising before or during the Guarantee Term that reasonably could be expected to change the amount of Project Savings realized under this Agreement.

1. Such a change, expansion, addition, or condition would include, but is not limited to: (a) changes in the primary use of any facility, Energy Conservation Measure, or portion of the premises; (b) changes to the hours of operation of any facility or portion of the premises; (c) changes or modifications to the Energy Conservation Measures or any related equipment; (d) changes to the M&V Services provided under this Small GESA Contract; (e) insufficient or improper maintenance or unsound usage of the Energy Conservation Measures or any related equipment at any facility or portion of the premises (other than by Small GESA Contractor); or (f) additions or deletions of Energy Conservation Measures or any related equipment at any facility or portion of the premises.

B. If Small GESA Contractor independently learns of any such change or condition, Small GESA Contractor shall calculate and send to Funding Agency a Notice of adjustment tothe Annual Project Benefits to reflect the impact of such change or condition, and the adjustment shall become effective as of the date the change or condition first arose. If the Funding Agency fails to promptly provide Small GESA Contractor with notice of any such change or condition,

Small GESA Contractor may make reasonable estimates as to the impact of such change or condition and as to the date on which such change or condition first arose in calculating the impact of such change or condition, and such estimates shall be conclusive.

PART 4

BASELINE CALCULATIONS AND UTILITY RATES

4-1. UTILITY COSTS FOR BASELINE

A. The unit utility costs for the Baseline period are set forth below as "Base Utility Cost" and shall be used for all calculations. The Base Utility Cost shall be escalated annually by escalation rate of one percent (1%). The Base Utility Cost for each type of utility represents the 12-month average utility costs from [START DATE] through [END DATE].

Building	SF	$/kWh (BER)	Avg kW Cost	Unblended $/kWh	$/Gallon	$/Ton	$/Therm

PART 5

PRIMARY OPERATIONS SCHEDULE PRE & POST RETROFIT

5-1. PRE/POST RETROFIT – [LIST APPLICABLE FACILITIES]

▪	Lighting – locations (Post)	
	Time On	Time Off
Monday	am	pm
Tuesday	am	pm
Wednesday	am	pm
Thursday	am	pm
Friday	am	pm
Saturday	Average of_____hours over the weekend	
Sunday		
Holidays	am	pm

HVAC – Occupied Hours (Pre)		
Monday	am	pm
Tuesday	am	pm
Wednesday	am	pm
Thursday	am	pm
Friday	am	pm
Saturday	-	-
Sunday	-	-
Holidays	-	-

HVAC – Occupied Hours (Post)		
Monday	am	pm
Tuesday	am	pm
Wednesday	am	pm
Thursday	am	pm
Friday	am	pm
Saturday	-	-
Sunday	-	-
Holidays	-	-

5-2. PRE/POST RETROFIT BUILDING TEMPERATURES

LIST APPLICABLE BUILDINGS AND FOR EACH:

Pre-Temperatures:

Occupied Temperature During Heating Season: _____to_____degrees F
Unoccupied Low Temperature Limit During Heating Season:_degrees F
Heating season is October_____through April _____
Occupied Temperature During Cooling Season: __ to___degrees F
Unoccupied High Temperature Limit During Cooling Season:____to___degrees F
Cooling season is May _____through September _____

Post-Temperatures:

Occupied Temperature During Heating Season: _____to_____degrees F
Unoccupied Low Temperature Limit During Heating Season: _____degrees F
Heating season is October_____through April _____
Occupied Temperature During Cooling Season: _____to_____degrees F
Unoccupied High Temperature Limit During Cooling Season: ____to____degrees F
Cooling season is May _ through September _____

PART 6

MEASUREMENT & VERIFICATION SERVICES

6-1. COMMONWEALTH REPRESENTATIVE

A. Small GESA Contractor shall ensure that an approved representative from Funding Agency is physically present for all pre-retrofit and post retrofit measurements, for each ECM as applicable to the Energy Savings Guarantee. Funding Agency and Small GESA Contractor shall mutually witness and record said measurements and sign Small GESA Contractor's measurement logbook, if deemed mutually acceptable. Small GESA Contractor shall include all logged measurements in the annual report to be provided.

6-2. M&V SERVICES

A. Small GESA Contractor will provide the M&V Services set forth below in connection with the Assured Performance Guarantee. Funding Agency shall pay Small GESA Contractor an annual fee for such services as identified in the table below. Notwithstanding anything to the contrary, Funding Agency may choose to continue the M&V services in Guarantee Year Four (4) and beyond by notifying the Small GESA Contractor within thirty (30) days of the end of the third Guarantee Year. If Funding Agency, after Small GESA Contractor's completion of the third year of M&V Services, does not continue with the M&V Services, it irrevocably acknowledges Small GESA

Contractor's full satisfaction of, and release from, this Assured Performance Guaranty.

1. During the Installation Period, the Small GESA Contractor's Performance Assurance Engineer will track Measured Project Benefits. The Small GESA Contractor will report the Measured Project Benefits achieved during the Installation Period to the Funding Agency within 30 days of the commencement of the Guarantee Term.

2. Within 30 days of each anniversary of the commencement of the Guarantee Term, Small GESA Contractor will provide DGS with an annual report containing:

   A. an executive overview of the project's performance and Project Benefits achieved to date;

   B. a summary analysis of the Measured Project Benefits accounting; and

   C. depending on the M&V Option, a detailed analysis of the Measured Project Benefits calculations.

3. During the Guarantee Term, the Small GESA Contractor's Performance Assurance Engineer will monitor the on-going performance of the ECMs, as specified in this Small GESA Contract, to determine whether anticipated Measured Project Benefits are being achieved. In this regard, the Performance Assurance Engineer will periodically assist the Funding Agency, on-site or remotely, with respect to the following activities:

   A. Conduct two annual on-site visits to verify proper operation of the equipment installed under the project.

   B. review information furnished by the Funding Agency from the facility management system to confirm that control strategies are in place and functioning;

   C. advise Funding Agency's designated personnel of any performance deficiencies based on such information;

   D. coordinate with Funding Agency's designated personnel to address any performance deficiencies that affect the realization of Measured Project Benefits; and

   E. inform Funding Agency of opportunities to further enhance project performance and of opportunities for the implementation of additional Improvement Measures.

4. If the Funding Agency allowed "Option A" M&V protocol, for those specified ECMs, the Small GESA Contractor will:

   A. conduct pre and post installation measurements required under this Small GESA Contract;

   B. confirm the building management system employs the control strategies and set points specified in this Small GESA Contract; and

   C. analyze actual as-built information and adjust the Baseline and/or Measured Project Benefits to conform to actual installation conditions (e.g., final lighting

and water benefits calculations will be determined from the as-built information to reflect the actual mix of retrofits encountered during installation).

5. For specified ECMs utilizing an "Option B" M&V protocol, the Small GESA Contractor will:

   A. confirm that the appropriate metering and data points required to track the variables associated with the applicable ECM's benefits calculation formulas are established; and

   B. set up appropriate data capture systems (e.g., trend and totalization data on the facility management system) necessary to track and report Measured Project Benefits for the applicable ECM.

6. For specified ECMs utilizing an "Option C" M&V protocol, the Small GESA Contractor will:

   A. perform periodic analysis of natural gas, coal, propane and oil consumption as applicable; and

   B. periodically verify heating set points, building operating schedules and occupancy and compare them to the baseline; and

   C. monthly updates to the baseline parameters and adjust baseline energy consumption as needed.

COST OF M&V SERVICES

Based on direction from the State, the fees for the first three (3) years of annual M&V service has been included in the Project; please refer to the project cash flow in the EAR Report dated XXXXXX. The amount to be paid annually by **CUSTOMER** for the M&V services provided is listed in the table below. If the Customer chooses to continue the M&V services in Guarantee Year Four (4) and beyond, it must notify Small GESA Contractor within thirty (30) days of the end of the third Guarantee Year. If the Customer wishes to continue the M&V Services past the third Guarantee Year, the pricing for each additional Guarantee Year for M&V services will be the Year 3 M&V Cost and Energy Bond Costs annually escalated at 3% in each additional Guarantee Year. The billing for the 1st three Guarantee Years will begin with Final Acceptance of this project.

TABLE FOR YEAR AND M&V COST

PART 7

[Agency] RESPONSIBILITIES

7-1. In order for Small GESA Contractor to perform its obligations under this Small GESA Contract with respect to the Work, the Assured Performance Guarantee, and the M&V Services, Funding Agency shall be responsible for:

1. Providing Small GESA Contractor, its subcontractors, and its agents reasonable and safe access to all facilities and properties that are subject to the Work and/or M&V Services;

2. Properly maintaining, and performing appropriate preventative maintenance on, all equipment and building systems affecting the Assured Performance Guarantee in accordance with manufacturers' standards and specifications;

3. Providing the utility bills, reports, and similar information reasonably necessary for administering Small GESA Contractor's obligations under the Assured Performance Guarantee within thirty (30) days of Funding Agency receipt and/or generation or Small GESA Contractor's request therefore;

4. Providing all records relating to energy and/or water usage and related maintenance of the premises and relevant equipment requested by Small GESA Contractor;

5. Providing and maintaining a dedicated telephone line and/or TCP/IP remote connection to facilitate remote monitoring of relevant equipment;

6. Promptly notifying Small GESA Contractor of any change in use or condition or any other matter that may impact the Assured Performance Guarantee.

ENERGY EFFICIENT MEASURES

The table below summarizes ECM savings and costs and Simple Payback.

TABLE TO BE INCLUDED

Appendix H

Small GESA Contract General Conditions

pennsylvania
DEPARTMENT OF GENERAL SERVICES

GENERAL CONDITIONS

FOR

SMALL GESA PROJECTS

Department of General Services
Harrisburg, PA
2016

TABLE OF CONTENTS

ARTICLE 1: DEFINITIONS

ARTICLE 2: EXECUTION, CORRELATION, INTENT AND INTERPRETATIONS

2.1 Contract Execution
2.2 Contract Interpretation
2.3 Contract Errors or Conflicts
2.4 Ownership and Copies of Contract Document

ARTICLE 3: SMALL GESA CONTRACTOR'S RETAINED PROFESSIONAL

3.1 Relationship between Funding Agency, Small GESA Contractor and Retained Professional
3.2 Basic Services
3.3 Professional Liability Insurance
3.4 Responsibility
3.5 Cooperation with Local Bodies
3.6 Interpretation of Documents
3.7 Coordination with Existing Facilities and Utilities
3.8 Standards of Quality
3.9 Non-Conforming Work
3.10 "Record Drawings" for Department of Labor & Industry
3.11 "As-Built Record Drawings" for Funding Agency
3.12 Operations and Maintenance Data
3.13 Replacement of Small GESA Contractor's Retained
3.14 Final Design Submission
3.15 Final Inspection
3.16 Commonwealth Owns Documents

ARTICLE 4: THE COMMONWEALTH

4.1 Easements and Rights of Access
4.2 Funding Agency Not Responsible for Small GESA Contractor's Means/Methods/Techniques
4.3 Funding Agency Not Responsible for Small GESA Contractor Acts or Omissions
4.4 Commonwealth's Access to Work
4.5 Rejection of Work

ARTICLE 5: THE SMALL GESA CONTRACTOR

5.1 Review of Contract Documents and Site Conditions
5.2 Supervision and Construction Procedures
5.3 Coordination of Subcontractors
5.4 Use of Site
5.5 Job Conferences
5.6 Drawings and Specifications at the Site
5.7 Responsibility for those Performing Work
5.8 Permits and Fees
5.9 PCCA/UCC Inspection and Compliance with Applicable Laws, etc.
5.10 Existing Utilities
5.11 Interruption of Existing Services

5.12 Small GESA Contractor Performing Excavation or Demolition
5.13 Cleaning the Project
5.14 Tests
5.15 Certificates of Inspection
5.16 Observation of Testing
5.17 Effect of Tests
5.18 Environmental Quality Control
5.19 Solid Waste
5.20 Compliance with Statutes and Regulations Administered by DEP
5.21 Suspension from Metal Roof Decks – New and Existing
5.22 Insulation
5.23 Enforcement of Insulation Requirement
5.24 Landscaping Products Recycled Content
5.25 Construction Products Recycled Content
5.26 Storage
5.27 Operations and Maintenance Instruction Manuals
5.28 As-Built Record Drawings
5.29 Warranty and Guarantee
5.30 Taxes
5.31 Offset of Amounts Due to Commonwealth
5.32 Nondiscrimination/Sexual Harassment Provision

ARTICLE 6: SUBCONTRACTORS

6.1 Small GESA Contractor's Interest in Subcontractor
6.2 Subcontractor/Supplier Responsibility
6.3 Small GESA Contractor Responsibility for Actions and Compliance
6.4 Acts and Omissions of Subcontractor
6.5 Subcontracts and Purchase Orders
6.6 No Contractual Relationship Between Funding Agency and Subcontractor
6.7 No Contractual Relationship Between Funding Agency and Supplier
6.8 Payment to Subcontractors Governed by Prompt Payment Act
6.9 Failure of Funding Agency to Make Progress Payment
6.10 Percentage of Completion
6.11 No Obligation to Pay Subcontractors or Suppliers
6.12 Subcontractor and Supplier Claims

ARTICLE 7: PROJECT SCHEDULE

7.1 Submission of Baseline Project Schedule
7.2 Software
7.3 Project Schedule Overview
7.4 Time is of The Essence
7.5 Schedule Requirements
7.6 Design Activities
7.7 Construction Activities
7.8 Procurement Activities
7.9 Small GESA Contractor Anticipated Weather Delays
7.10 Float
7.11 Schedule Acceptance
7.12 Maintaining the Project Schedule
7.13 Project Schedule Updating
7.14 Recovery Plan

7.15 Requests for Extension of Time
7.16 Extensions of Time and Impact On Schedule
7.17 Delays and Extensions of Time
7.18 Unfavorable Weather
7.19 Extension of Time Is Not an Admission of Liability For Delay

ARTICLE 8: SUBMITTALS
8.1 Submittals
8.2 Approval by Retained Professional
8.3 Standards of Quality
8.4 Substitution of Materials

ARTICLE 9: PROTECTION OF PROPERTY, INSURANCE AND INDEMNIFICATION
9.1 Safety Overview
9.2 Compliance with Safety Laws
9.3 Accident Reports
9.4 First Aid Treatment
9.5 Emergency Notification
9.6 Failure to Comply With Safety Regulations
9.7 Explosives
9.8 Remediation of Damages
9.9 Loads
9.10 Small GESA Contractor's Liability Insurance
9.11 Certificates of Insurance
9.12 Small GESA Contractor's Property Insurance
9.13 Small GESA Contractor's Insurance Requirements
9.14 Specialized Insurance
9.15 Hazardous Material Liability Insurance
9.16 Risk to Construction Work
9.17 Unacceptable Surety or Insurance Company
9.18 Indemnification
9.19 Indemnification Not Limited by Employee Benefits Acts
9.20 Workforce Drug and Alcohol Policy

ARTICLE 10: CHANGES IN THE WORK
10.1 Changes
10.2 Cost of Change Order
10.3 Disagreement as to Cost or Credit
10.4 Unclassified Excavation
10.5 Concealed Conditions
10.6 No Claims for Additional Cost or Time
10.7 Minor Changes in the Work
10.8 Directive to Commence Change Order Work

ARTICLE 11: NON-CONFORMING WORK AND CORRECTIONS
11.1 Work Covered Contrary to Request
11.2 Uncovering of Work
11.3 Correction of Work Rejected by Funding Agency
11.4 Correction of Work after Acceptance
11.5 Correction at No Cost to Funding Agency
11.6 Investigation by the Funding Agency
11.7 Acceptance of Non-Conforming Work

11.8 Obligations of Small GESA Contractor Not Limited by this Article

ARTICLE 12: PAYMENTS AND COMPLETION

12.1 Contract Breakdown
12.2 Application for Progress Payments
12.3 Stored Material
12.4 Small GESA Contractor Warrants that Title to all Work Passes Free of Liens
12.5 Neither Payment nor Occupancy Accepts Non-Conforming Work
12.6 Approval for Release of Payments Withheld
12.7 Payment Made When Grounds are Resolved
12.8 Retainage
12.9 If the Funding Agency Does Not Approve Release of Payment
12.10 Work Cannot be Completed through No Fault of Small GESA Contractor
12.11 Approval to Release Final Payment Not Due Until Conditions Met
12.12 Approval of the Release Final Payment if Delay not Small GESA Contractor's Fault
12.13 Final Payment as Waiver of Claims
12.14 Acceptance of Final Payment as Waiver of Claims

ARTICLE 13: PROJECT CLOSEOUT

13.1 Closeout Generally
13.2 Final Inspection

ARTICLE 14: SUSPENSION

14.1 Suspension of Work Due to Unfavorable Conditions or Weather
14.2 Suspension of Work due to Fault of Small GESA Contractor
14.3 Suspension of Work for the Convenience of Funding Agency
14.4 Resumption of Work

ARTICLE 15: TERMINATION OF THE CONTRACT

15.1 Termination for the Convenience of Funding Agency
15.2 Small GESA Contractor's Default
15.3 Unpaid Contract Balance
15.4 Surety Replacement of Small GESA Contractor
15.5 Surety's Failure to Provide Replacement Small GESA Contractor
15.6 Funding Agency's Right of Recovery

ARTICLE 16: DISPUTES

16.1 Small GESA Contractor Must Carry on Work During the Dispute Process
16.2 Dispute Resolution is a 3-Step Process
16.3 Step 1: Field Dispute Review Meetings
16.4 Step 2: Claim Settlement Conference
16.5 Step 3: Filing a Claim at the Board of Claims

ARTICLE 17: MISCELLANEOUS CONDITIONS

17.1 Project Sign
17.2 Temporary Ventilation
17.3 Work Beyond Limit of Contract
17.4 Advertising
17.5 Federal and A.S.T.M. and Other Specifications

17.6 Storage and Stockpiling on Roofs
17.7 Audit of Records
17.8 Reduction of Noise
17.9 Visible Dust Emissions

ARTICLE 18: LEGAL MATTERS
18.1 No Estoppel or Waiver of Legal Rights
18.2 Law of the Place
18.3 Successors and Assigns
18.4 Written Notice
18.5 Claims for Damages: Legal Relations and Responsibilities
18.6 Royalties and Patents
18.7 Personal Responsibility and Work Opportunity Reconciliation Act
18.8 Prevailing Minimum Wage Predetermination
18.9 Public Works Employment Verification Act
18.10 Steel Products Procurement Act
18.11 Tobacco Use on Project
18.12 Right-to-Know Law

ARTICLE 1

DEFINITIONS

Whenever in this Small GESA Contract the following words and expressions occur, they have the following meanings, which shall be construed in conjunction with the applicable definitions of the Commonwealth Procurement Code:

1.1 Administrative Procedures – the Small GESA construction procedures manual to be followed for various administrative functions.

1.2 Application for Release of Payment – The document (DGS Form GSC-17) submitted by the Small GESA Contractor to the Funding Agency pursuant to the applicable Administrative Procedure for Funding Agency's review and/or approval of the release of payment by the Escrow Agent.

1.3 As-Built Record Drawings – Terminology used to identify contract prints or drawings, corrected with suitable markings to show all changes or variations from the original contract drawings, including all items uncovered during the Work and show details of the Work as actually built. As-built record drawings are not "Record Drawings", which terminology is used to describe the revised set of construction documents (also referred to as L&I Record Drawings) in which the Small GESA Contractor's Retained Professional is responsible for submitting to L&I for approval of changes made during construction that are not in accordance with the Design Documents.

1.4 Biweekly – an event occurring every two weeks.

1.5 Change Order – A written order signed by the Funding Agency directing the Small GESA Contractor to make changes that the changes clause of the Contract authorizes the Funding Agency to order. The change order may be either with the consent of the Small GESA Contractor or a unilateral order issued by the Funding Agency. The Contract Sum may be changed only by Change Order.

1.6 Commonwealth – The Commonwealth of Pennsylvania.

1.7 Contract – (Small GESA Contract or Contract) A written agreement consisting of the Contract Documents, as defined in Article I of the Small GESA Contract and executed by the Small GESA Contractor and the Commonwealth in accordance with the Commonwealth Attorneys Act. The Contract represents the entire an integrated agreement between the parties and supersedes all prior negotiations, representations, or agreements, either written or oral. To the extent that any of these documents are amended by statute, the statutory language will control.

1.8 Contract Bonds – The bonds required by the Small GESA Contract Documents which must be executed by one or more surety companies legally authorized to do business in the Commonwealth of Pennsylvania for the faithful performance of the contract and for payment of labor and material.

1.9 Contract Completion Date – The date specified in the Contract for completion of the Work.

1.10 Contract Documents – As described in Article I of the Small GESA Contract. All of these documents form the contract and are incorporated by reference and are as fully part

of the contract as if attached to this Contract or repeated herein. To the extent that any of these documents are amended by statute, the statutory language will control.

1.11 Contract Duration – The number of calendar days set forth in the Contract Documents for completion of the Work, also referred to as Contract Time.

1.12 Contract Limits – the area set forth in the Contract Documents that establishes the perimeter within which the Small GESA Contractor shall perform the Work.

1.13 Contract Start Date – For purposes of calculating date for completion of the Work, this is the date upon which the Initial Design Meeting is held for the Project.

1.14 Contract Sum – The total amount payable to the Small GESA Contractor for the performance of the Work under the Contract Documents.

1.15 Days – Calendar days unless specifically stated otherwise in the contract.

1.16 Deficiency Item – Any work or activity, either complete or incomplete, which the Funding Agency will not certify as being performed in accordance with the Contract Documents.

1.17 Design Documents – documents created by the Small GESA Contractor's Retained Professional to be issued for any specific Small GESA project.

1.18 Effective Date of the Contract – the date on which the last Commonwealth official who is required to execute the contract executes it.

1.19 Energy Conservation Measure (ECM) – Energy Conservation Measure, as fully defined in *62 Pa. C.S. §3752*, as amended.

1.20 Escrow Agent – If applicable to a specific project, this is the financial entity designated by the Energy Financing Provider to maintain and administer the Escrow Account from which the Small GESA Contractor will be paid upon submission of approved Applications for Release of Payment.

1.21 Extension of Time – a formal written approved extension of the contract duration.

1.22 Field Order – A field order is a record of a minor adjustment in the work that results in no change in the Contract Sum or Contract Duration.

1.23 Final Inspection – A review of the Work conducted by the Small GESA Contractor's Retained Professional and the Funding Agency after the Small GESA Contractor requests a Final Inspection to determine if the Work on a specific project is substantially complete.

1.24 Funding Agency (a.k.a. "designee") - The Department that operates the facility where the Small GESA project will occur. The Funding Agency will sign the Small GESA Contract on behalf of the Commonwealth.

1.25 Labor & Industry (L&I) – The Commonwealth of Pennsylvania's Department of Labor & Industry also referred to as "L&I".

1.26 Milestone Activity – On a Project schedule, this is the beginning date or the completion date for a significant Work event.

1.27 Notice of Deficiency – A written document issued by the Funding Agency to record non-conforming work, deficient work and/or schedule slippage.

1.28 Off-Site Work – All work that is not physically carried out within the limits of contract on a project site.

1.29 On-Site Work – All work that is physically carried out on the site within the limits of contract.

1.30 Post-Consumer Material – Material or finished product that has served its intended use and has been diverted or recovered from waste destined for disposal, having completed its life as a consumer item. Post-consumer material is part of the broader category of recovered material.

1.31 Post-Consumer Recovered Paper – Any paper, paperboard, and fibrous wastes from retail stores, office buildings, homes and so forth, after they have been passed through their end-usage as a consumer item including: used corrugated boxes, old newspapers, old magazines, mixed waste paper, tabulating cards and used coreage, as well as all paper, paperboard and fibrous wastes that enter and are collected from municipal solid waste.

1.32 Project – The total Work to be performed by the Small GESA Contractor under the Project Number.

1.33 Project Manager – Small GESA Contractor's person responsible for direct supervision of a specific Small GESA project, including all design and construction, in accordance with the Contract Documents and the Small GESA Contract with the Funding Agency. The Project Manager is responsible for continuous contract operations including supervision, coordination and completion of all of the work. The Project Manager shall have full authority to act on behalf of the Small GESA Contractor in relation to project activities and associated work.

1.34 Project Procedures Manual – The Manual that provides the Small GESA Contractor's Retained Professional with a guideline of procedures and standards for the design and construction of every Small GESA Project. The Manual's organization reflects the sequence in which services and submissions will normally occur.

1.35 Project Schedule – The Critical Path Method (CPM) schedule prepared by the Small GESA Contractor as more fully described in these General Conditions.

1.36 Record Drawings – (also referred to as "L&I Record Drawings") - The revised set of construction documents in which the Small GESA Contractor's Retained Professional is responsible for submitting to L&I for approval of changes made during construction that are not in accordance with the Design Documents. The Small GESA Contractor shall also submit one (1) set to the Funding Agency or designee.

1.37 Recovered Material – Waste material and byproducts which have been recovered or diverted from solid waste, but such term does not include those materials and byproducts generated from and commonly reused within an original manufacturing process.

1.38 Request for Information – A written question issued by the Small GESA Contractor to the Funding Agency or designee seeking clarification of the Contract Documents ("RFI").

1.39 Samples – Physical examples furnished by the Small GESA Contractor to illustrate materials, equipment or workmanship, and to establish standards by which the work will be judged.

1.40 Small GESA Contractor – The person, entity, or organization identified as such in the Small GESA Contract.

1.41 Small GESA Contractor's Retained Professional – the licensed engineer(s) and/or architect(s) retained by the Small GESA Contractor to provide necessary design services under contract to the Small GESA Contract. The term "Small GESA Contractor's Retained Professional" is referred to throughout the Contract Documents as if singular in number and means a person or firm and/or persons or firms that have contractual responsibility for all or any portion of the Project design.

1.42 Specification – A description of the physical or functional characteristics or the nature of a construction item, including a description of any requirement of inspecting, testing or preparing a construction item for delivery. The specifications are prepared by the Small GESA Contractor's Retained Professional, become a part of the Contract Documents and must be interpreted in conjunction with the other Contract Documents, as specified further in these General Conditions.

1.43 Subcontractor – A person or organization which has a contract with the Small GESA Contractor to perform any of the design, construction or testing work. The term subcontractor is referred to throughout the Contract Documents as if singular in number and means a subcontractor or its authorized representative. The Small GESA Contractor and every subcontractor agree that there is no privity of contract between the Funding Agency and any subcontractor and that, to the extent set forth by law, the subcontractor has no direct cause of action against the Funding Agency for any claim arising out of the Project.

1.44 Submittals – Administrative or technical information, including but not limited to drawings, diagrams, illustrations, schedules, performance charts, brochures, catalog data, samples and other data that are prepared by the Small GESA Contractor, the Small GESA Contractor's Retained Professional or any subcontractor, manufacturer, supplier, or distributor, and which illustrate some portion of the Work or how it fits in relation to other parts of the Work.

1.45 Substantial Completion of the Work – The date on which the Work on the Small GESA Contractor Contract is sufficiently completed in accordance with the Contract Documents and certified by the Small GESA Contractor's Retained Professional and reviewed and accepted by the Funding Agency, or designee, so that the Project, or a part of the Project specified by the Funding Agency, can be used, occupied or operated for its intended use. In no event shall the Project be certified by the Small GESA Contractor's Retained Professional or the Funding Agency, or designee, as substantially complete until at least 90% of the physical work has been completed and accepted by the Funding Agency and is capable of beneficial occupancy.

1.46 Superintendent – The Small GESA Contractor's full time construction representative at the project site. The Superintendent is responsible for continuous field supervision, coordination and completion of the construction work, and, unless another person is designated in writing by the Small GESA Contractor to the Funding Agency, for the

prevention of accidents. The Superintendent shall have full authority to act on behalf of the Small GESA Contractor in relation to construction activities and associated work.

1.47 Supplier – An entity or individual who receives compensation from the Small GESA Contractor, pursuant to the terms of a purchase order or invoice to provide any material and/or any equipment to the Project. Nothing contained in the Contract Documents between the Funding Agency and the Small GESA Contractor creates any contractual relationship between the Funding Agency and any supplier. A supplier lacks the privity of contract to the Funding Agency and every supplier agrees that it neither acquires nor intends to acquire any rights against the Funding Agency on a third party beneficiary theory or any other theory.

A. STOCKING SUPPLIER – a firm that owns, operates or maintains a store, warehouse, or other establishment in which the materials, supplies, articles or equipment of the general character described by the specifications and required under the contract are bought, kept in stock, and regularly sold or leased to the public in the usual course of business.

B. NON-STOCKING SUPPLIER – a supplier that does not carry inventory but orders materials from a manufacturer, manufacturer's representative or a stocking supplier. In order for a non-stocking supplier to received credit as a SDB, it must perform a useful business function by engaging in meaningful work (i.e., negotiating price and determining quality and quantity and ordering materials and paying for the materials.

1.48 Uniform Construction Code (UCC) – Pennsylvania's Uniform Construction Code (35 P.S. §7210.101 *et seq*.) that grants the Pennsylvania Department of Labor & Industry sole jurisdiction over state-owned buildings. A general description and important links can be found at **http://www.dli.state.pa.us** and clicking on the Building Codes Quick Link. The Small GESA Contractor is responsible for compliance as set forth in the UCC and these General Conditions.

1.49 Work – All services and labor necessary to design, implement/construct, and test the ECMs set forth in the Contract Documents. This term also includes all material and equipment incorporated or to be incorporated into such construction.

ARTICLE 2

EXECUTION, CORRELATION, INTENT AND INTERPRETATIONS

2.1 Contract Execution. The Funding Agency and the Small GESA Contractor shall sign the Small GESA Contract and any amendments to the Small GESA Contract. All drawings created during the design portion of a specific project shall be sealed as appropriate by the Small GESA Contractor's Retained Professional. Any Licensed Consultant(s) of the Small GESA Contractor's Retained Professional shall as appropriate sign and seal for their part of the Work. No oral contract or conversation with any officer, agent or personnel of The Funding Agency or the Funding Agency either before or after the execution of the Small GESA Contractor Contract shall affect or modify any of the terms or obligations herein contained.

2.2 Contract Interpretation.

a. The Contract Documents are complementary, and what is required by any one of the Contract Documents is binding as if required by all. The intention of the Contract Documents is to include all labor, materials, equipment and other items or conditions necessary for the proper design, construction and testing of the work for its intended use. The omission of words or phrases for brevity of the Contract Documents, the inadvertent omission of words or phrases or obvious typographical or written errors shall not nullify the Funding Agency's interpretations (or designee's interpretation) so long as that interpretation is reasonably inferable from the Contract Documents as a whole. Except as noted otherwise, references to standard specifications or publications or associations, bureaus, or organizations shall mean that latest edition or revision of the referenced standard specification or publication as of the issuance date of the RFP. Words which have well-known technical or trade meanings are used in this contract in accordance with such recognized meanings.

b. In the event of a conflict in the Contract Documents, the Small GESA Contractor shall notify the Retained Professional and the Funding Agency within the time frame stated below. The Retained Professional or the Funding Agency as appropriate) shall interpret the Contract Documents using the following priorities:

1) Change Orders shall govern over all Contract Documents and subsequent Change Orders shall govern over prior Change Orders only to the extent modified.
2) The Small GESA Contract.
3) The Small GESA General Conditions.
4) Bulletins or addenda and subsequent addenda shall govern over prior addenda only to the extent modified.
5) The RFP shall govern over Design Documents.
6) The Administrative Procedures.
7) If there is a conflict regarding quantities or quality of products in the Contract Documents, the higher quantity or quality shall be delivered.
8) If there is a conflict between the contract drawings and the specifications, the specifications shall prevail.
9) If there is a conflict regarding quantities or quality of products in the Contract Documents, seek guidance from the Funding Agency and/or use the priorities above to determine the appropriate quantity or quality.
10) Where Reference and/or Prototype documents are provided, the Small GESA RFP documents shall prevail with regard to intent and administrative provisions even though reference and/or prototype documents may be in more detail. Where a conflict prevents clarity in this regard the Small GESA Contractor shall assume the most costly in developing the Cost Submission and shall seek guidance from the Funding Agency prior to finalizing the design.

2.3 **Contract Errors or Conflicts.** If the Small GESA Contractor, in the course of design and construction, finds any conflict, error or discrepancy on or among the Contract Documents, such conflict, error or discrepancy shall be immediately referred to the Small GESA Contractor's Retained Professional in writing, with a copy of each such referral to be forwarded to the Funding Agency. If the matter concerns the Design Documents only, the Small GESA Contractor's Retained Professional must review the matter and issue an interpretation to the Small GESA Contractor in writing within seven (7) days after receipt of the Small GESA Contractor's written request, with a copy of each such interpretation to be forwarded to the Funding Agency for acceptance. If the matter concerns the RFP documents, the Funding Agency shall review the matter and issue an interpretation to the Small GESA Contractor in writing within seven (7) days after receipt of the Small GESA Contractor's written request, with a copy to the Retained Professional.

2.4 **Ownership and Copies of Contract Documents.** Unless otherwise provided in the Contract Documents, the Small GESA Contractor's Retained Professional will furnish three (3) complete sets in the Funding Agency accepted electronic format and media of drawings and specifications to the Funding Agency at the time they are issued for construction of the project. These three sets of drawings and specifications shall be in addition to any drawings and specifications submitted as preliminary design documents. If the Funding Agency requires additional sets for the Funding Agency's use during the project, the Funding Agency shall pay for the cost of obtaining additional specifications and drawings. All drawings, specifications and copies thereof are and shall remain the property of the Funding Agency.

ARTICLE 3

SMALL GESA CONTRACTOR'S RETAINED PROFESSIONAL'S RESPONSIBILITIES AND SERVICES

3.1 **Relationship between The Funding Agency, Small GESA Contractor and Retained Professional.** The Retained Professional shall be under contract to the Small GESA Contractor. As such, the Small GESA Contractor has ultimate responsibility to the Funding Agency for the design and/or coordination of designs if multiple Retained Professionals are utilized for different portions of the Work. The Retained Professional is responsible to the Small GESA Contractor and only the Small GESA Contractor may give instructions which bind the Retained Professional. Although the Funding Agency will obtain a copy of the fully executed contract between the Small GESA Contractor and the Retained Professional, the Funding Agency will not assume any privity or liability for the performance of the Small GESA Contractor/Retained Professional contract.

3.2 **Basic Services.** The Retained Professional's Basic Services consist of design of a specific Small GESA Project described in the Small GESA Contract. The Basic Services include coordination of all architectural, structural, mechanical, plumbing and electrical engineering, and landscape architectural design and all other professional services and stated construction phase services required for the specific project. Where the Small GESA Contractor retains separate professionals to carry out the Work of their respective disciplines, the provisions of this Article apply equally to each. The Retained

Professional shall perform its services in accordance with the Project Procedures Manual.

3.3 Professional Liability Insurance.

a. The Retained Professional and any consultants of the Retained Professional which are required to provide sealed documents shall secure and maintain Professional Liability Insurance as specified in these General Conditions.

b. If the Retained Professional or any consultant is a Joint Venture, one Retained Professional Liability Insurance policy covering the Joint Venture, or separate policies covering the individual joint venturers may be furnished. If separate policies covering the individual joint venturers are furnished, each policy must provide the minimum coverage for each occurrence as called for in the RFP and must together be equal to at least the aggregate amounts.

c. Alternately, the Retained Professional may be covered under the Small GESA Contractor policies as provided for in these General Conditions. The Small GESA Contractor is ultimately responsible for the Project design and any errors, omissions or other acts covered by professional liability insurance and shall ensure that the Small GESA Contractor and the Retained Professional are adequately and appropriately covered by insurance.

3.4 Responsibility. The Retained Professional is responsible for the compliance of the Design Documents with all applicable permits, laws, regulations and ordinances of all commissions, agencies and governments, federal, state and local, insofar as they are applicable to, and have jurisdiction over the Project. The Retained Professional shall make all required submittals to, and shall obtain all required approvals from, the applicable agency in a timely manner so as not to cause delays to the Project.

3.5 Cooperation with Local Bodies. During the design of a Small GESA Project, the Retained Professional shall keep the local government informed about the Project and comply with any applicable requirements of local zoning, planning and supervisory bodies. If any of these requirements vary with the RFP and substantially increase the cost of the Project, or if any required approvals are withheld by the local bodies, the Retained Professional shall immediately notify both the Small GESA Contractor and the Funding Agency in writing of the issue.

3.6 Interpretation of Documents. The Small GESA Contractor's Retained Professional is the initial interpreter of the requirements of the Design Documents. The Small GESA Contractor's Retained Professional will, within seven (7) days after receipt of a written request, render in writing such interpretation and shall copy the Funding Agency on all such correspondence rendering an interpretation of the contract documents. All interpretations by the Small GESA Contractor's Retained Professional shall be consistent with the Contract Documents.

3.7 Coordination with Existing Facilities and Utilities. The Retained Professional and consultants shall consult with the Funding Agency to obtain all necessary data for coordinating a specific project with existing structures and all support utilities. The Retained Professional shall confirm in writing to and Funding Agency, through the Small GESA Contractor, all data furnished to the Retained Professional in this connection and the data's adequacy. The Retained Professional shall verify the information provided in

the Contract Documents regarding the various public services and utility companies, such as gas, electric, water, steam, waste water treatment/disposal, surface water disposal, telephone and communication, the commitment of their capability to service this Project, and shall submit same to the Funding Agency as part of its design submissions. The Retained Professional shall bring to the Funding Agency's immediate attention any reservations to this commitment by the utility companies, such as in-house engineering and construction costs and any inconsistencies regarding the locations and characteristics of such utilities between the actual field conditions and those indicated.

3.8 **Standards of Quality.** If the Small GESA Contractor wishes to utilize material or equipment that is of the same type as specified, but manufactured by others than those named in the specifications of either the RFP, bridging or prototype documents (if any), the Small GESA Contractor shall certify at the time of submittals that the material or the equipment is equal in quality, performance and appearance to that mentioned in the specifications. No substitutions or "equal" submissions can be made to proprietary items.

3.9 **Non-Conforming Work.** If corrective work or drawings are required from the Small GESA Contractor's Retained Professional due to defective or non-conforming work by the Small GESA Contractor, the cost for the Retained Professional's additional services shall be borne by the Small GESA Contractor.

3.10 **"Record Drawings" for Department of Labor & Industry.** The Small GESA Contractor is responsible for submitting to the Department of Labor and Industry a revised set of Design Documents for approval for changes made during construction that are not in accordance with the Design Documents. This revised set of construction shall be referred to as "L&I Record Drawings" and shall be submitted in accordance with L&I UCC requirements.

3.11 **"As-Built Record Drawings" for the Funding Agency.** No later than at Final Inspection of the Project, the Retained Professional shall submit As-Built Record Documents showing all changes or variations from the original contract drawings and specifications made during the course of construction. These drawings shall indicate all items uncovered during the Work and show details of the work as actually built, including but not limited to horizontal and vertical dimensional references of all concealed pipe, conduit and other lines and equipment and similar items. Recorded changes shall be obtained from clearly marked field prints provided by the construction contractors and field office and from change orders. These As-Built Record Drawings shall be on archival paper for drawings and documents, and shall include three complete, identical electronic copies formatted and on media acceptable to the Funding Agency, shall be identified as "As-Built Record Documents", shall be delivered to, and shall become the sole property of, the Funding Agency.

3.12 **Operations and Maintenance Data.** Prior to Final Inspection of the Project, the Retained Professional shall collect from the Small GESA Contractor, as provided in the Construction Documents, a final draft of the Operation and Maintenance Instructions Manuals prepared by the Small GESA Contractor and its various subcontractors. The Retained Professional shall review the draft for completeness including all pertinent shop drawings, diagrams, catalog data, manufacturers operating instructions, manufacturer's or supplier's maintenance instructions, certificates, warranties, guarantees and other pertinent operating and maintenance data. The Retained Professional shall indicate its approval of the draft with correction if necessary or request a revised draft and

resubmission of the manual for the Retained Professional's review and approval. Upon receipt of the two (2) final bound manuals from the Small GESA Contractor, the Retained Professional shall review them for accuracy and content, and when they meet with its approval, the Retained Professional shall forward to the Funding Agency the two (2) copies and two (2) identical, additional copies in electronic format(s) and on media acceptable to the Funding Agency prior Final Inspection.

3.13 **Replacement of Small GESA Contractor's Retained Professional.** If the Small GESA Contractor terminates the Retained Professional, the Small GESA Contractor may hire a new Retained Professional whose status under the Contract Documents shall be that of the former Small GESA Contractor's Retained Professional. The decision of whether or not to terminate the Retained Professional rests solely with the Small GESA Contractor. The Funding Agency expressly reserves the right to evaluate and either accept or reject the Small GESA Contractor's replacement Professional. The Small GESA Contractor's decision to replace the Small GESA Contractor's retained Professional shall not give rise to any claim for additional costs or time to complete the Small GESA Contract.

3.14 **Final Design Submission.** The Retained Professional shall schedule and coordinate its work so the Funding Agency and the Energy Engineer have adequate time and opportunity to review and accept the Final Design submission as discussed in the Small GESA Project Design Manual. The Retained Professional must obtain acceptance in a timely manner to permit the Work to continue on schedule.

3.15 **Final Inspection.** When the Small GESA Contractor submits in writing to the Funding Agency a request for a Final Inspection and an application for final release of payment, the Final Inspection will be conducted within 30 days of the receipt of the request. If the Funding Agency and the Small GESA Contractor's Retained Professional concur that the Work is substantially complete, the Small GESA Contractor's Retained Professional will issue a Certificate of Final Completion and a final certificate for payment. In such case, the Retained Professional shall produce and deliver to the Small GESA Contractor, at Final Inspection, a list of uncompleted items and a reasonable cost of completion (Punch List). The Punch List shall list in detail each uncompleted item and a reasonable cost of completion for each Punch List item. The Funding Agency shall be given the opportunity to review and accept the contents of the Punch List. The Retained Professional will participate in any subsequent inspection to determine if the items are completed.

3.16 **Commonwealth Owns Documents.** All contract drawings and specifications, special requirements and all other data compiled by the Retained Professional or the consultants for this Project, become the sole property of the Commonwealth, and may be used by it for any purpose desired by the Funding Agency without compensation. The Small GESA Contractor, the Retained Professional and all consultants convey to the Commonwealth copyright of the design and all design documents produced under this contract. The Small GESA Contractor and Retained Professional and consultants are not liable for any reuse of these documents by the Commonwealth.

ARTICLE 4

THE COMMONWEALTH

4.1 **Easements and Rights of Access.** If the Funding Agency deems it necessary, they, or their designee, will secure the appropriate interests in land, including but not limited to permanent and temporary easements. If such easements are insufficient for the erection of temporary construction facilities and storage of materials, the Funding Agency or designee shall provide easements and space as the Funding Agency deems necessary.

4.2 **The Funding Agency Not Responsible for Small GESA Contractor Means/Methods/Techniques.** Neither the Funding Agency nor designee bears any responsibility for the construction means, methods, techniques, sequences or procedures, or for safety precautions and programs in connection with the Work since these are solely the Small GESA Contractor's responsibilities.

4.3 **The Funding Agency Not Responsible for Small GESA Contractor Acts or Omissions**. Neither the Funding Agency nor designee bears any responsibility for the acts or omissions of the Small GESA Contractor, or any of its subcontractors or any of their agents or employees, or any other persons performing any Work for the Small GESA Contractor.

4.4 **Commonwealth's Access to the Work.** The Funding Agency will, at all times, be provided full access to any area they deem necessary. The Small GESA Contractor shall provide the facilities for such access so the Funding Agency may perform its functions under the Contract Documents.

4.5 **Rejection of Work.** The Funding Agency may reject Work that is not in conformance with the Design Documents or direct the Small GESA Contractor to stop any portion of the Work, or to require special inspection or testing of the Work whenever such action is necessary or advisable to insure the proper implementation of the Contract Documents. The Funding Agency's failure to reject Work does not relieve the Small GESA Contractor from performing Work in accordance with the Contract Documents.

ARTICLE 5

THE SMALL GESA CONTRACTOR

5.1 **Review of Contract Documents and Site Conditions.**

a. Proposal Preparation Stage Investigation and Document Review. During the Proposal preparation stage, the Small GESA Contractor had an affirmative duty to examine the nature and location of the Work, the soil and rock conditions if applicable and the character, quality and quantity of the materials that are required for the Work. The Small GESA Contractor may rely upon the geotechnical information, if any, available for review on the Project. The Small GESA Contractor also had a duty to study and compare the utility bills and any other documents supplied by the Funding Agency. If the Small GESA Contractor did not request a clarification during the Proposal preparation stage with regard to the site conditions or discrepancies within the Contract Documents, the Small GESA Contractor may

not submit a claim after award of the contract alleging insufficient data, ambiguity in the documents or incorrectly assumed conditions.

b. Post-Award Investigation and Document Review.

1) Site Conditions – If, after award, the Small GESA Contractor finds any material change in the condition of the site, the Small GESA Contractor must immediately inform the Funding Agency in writing of the change site condition. The Funding Agency will address the alleged material change in the site conditions and notify the Small GESA Contractor in writing of such review.

2) Contract Documents – If, after award, the Small GESA Contractor contends that there are discrepancies or errors in the documents issued with the RFP, the Small GESA Contractor must submit the contention as a written Request for Information to the Funding Agency within 10 days of discovering the alleged discrepancy.

i. If the Funding Agency determines that the alleged discrepancy/error constitutes a patent condition that should have been discovered during the proposal preparation stage (see 5.1a), no additional time or compensation will be granted to the Small GESA Contractor.

ii. If the Funding Agency determines the alleged discrepancy constitutes a latent condition that would not be reasonably susceptible of being discovered during the proposal preparation stage, the Funding Agency will consider granting additional time and/or compensation to the Small GESA Contractor, depending upon the specific nature of the condition.

5.2 **Supervision and Construction Procedures.** The Small GESA Contractor is solely responsible for all construction means, methods, techniques, procedures, and safety programs in connection with the Work on any project. Furthermore, the Small GESA Contractor shall perform the Work in accordance with applicable industry standards for performance, service life, deterioration and wear; in a good and workmanlike manner, and in accordance with manufacturer's recommendations and requirements; in compliance with regulatory approvals and applicable laws, regulations, and ordinances; and in accordance with the Contract Documents.

5.3 **Coordination of Subcontractors.** The Small GESA Contractor shall be responsible for all acts of its subcontractors utilized under the Small GESA Contractor Contract and for their compliance with all terms and provisions of the Small GESA Contract applicable to their performance. The Small GESA Contractor's subcontractors shall not be removed from the Project without the Funding Agency's review and acceptance. The Small GESA Contractor will not receive an extension of time or additional compensation for the removal of any unacceptable subcontractors. The failure of any subcontractor to complete its portion of the Work in a satisfactory manner within the proper time will not relieve the Small GESA Contractor of responsibility for the proper and satisfactory execution and completion of the entire Work.

5.4 **Use of Site.** The Small GESA Contractor shall confine its apparatus, the storage of equipment, tools and materials and its operations and workers at the site to the limits of contract as permitted by law, ordinances, permits and the Contract Documents. The

Small GESA Contractor shall not unreasonably encumber the site with any materials or equipment.

5.5 Job Conferences. Job Conferences may be held as often as required, but shall be held at least bi-weekly and must be attended by the Small GESA Contractor. The names of the authorized representative of the Small GESA Contractor shall be submitted to the Funding Agency at the Orientation Conference. The Funding Agency will attend the Job Conference. The Funding Agency will advise the Small GESA Contractor of the dates and times of the Job Conferences. Failure to attend a Job Conference or any other mandatory meeting (unless excused by the Funding Agency) constitutes a breach of the Small GESA Contractor contract.

5.6 Drawings and Specifications at the Site.

a. The Small GESA Contractor shall maintain in good order at the site, for the Funding Agency and the Small GESA Contractor's Retained Professional, one record copy of all drawings, specifications, bulletins, addenda, contract modifications, change orders and requests for information. The Small GESA Contractor shall include the value of the as-built drawings as a cost item, which shall be subject to the acceptance of the Funding Agency.

b. The Small GESA Contractor shall also maintain at the site one record copy of approved shop drawings, catalog data, operating and maintenance instructions, certificates, warranties, samples and similar submittals. These shall be available to the Funding Agency and Small GESA Contractor's Retained Professional at all times, and they shall be delivered to the Funding Agency as part of the Operation and Maintenance Instruction Manuals.

5.7. Responsibility for those Performing Work. The Small GESA Contractor is responsible for the acts and/or omissions of all of its employees and all subcontractors, their agents and employees, and all other persons performing any of the Work. The Small GESA Contractor shall at all times enforce good order and conduct among its employees and subcontractors. Every employee and subcontractor shall be skilled in the performance of work assigned to that employee or subcontractor. All Small GESA Contractor personnel shall be respectful of all Commonwealth employees and the general public. Any incidents of disrespect, verbal abuse, threatening statements, unwelcome comments, unwelcome interaction or any form of harassment from any Small GESA Contractor personnel toward any Commonwealth employee, or the general public is strictly prohibited. Any violation is sufficient cause for the Funding Agency to direct the Small GESA Contractor to remove such person from employment on the site. The Funding Agency will not be responsible or liable for any delays caused to the Project due to any individual being removed from the site.

5.8. Permits and Fees. Due to the UCC, all state-owned facilities fall under the jurisdiction for plan review and inspection only by the Commonwealth Department of Labor & Industry. Consequently, the Small GESA Contractor shall not obtain any building permits from local authorities. The Small GESA Contractor shall, however, continue to obtain and pay for all other necessary permits, licenses, and certificates required by law for the proper execution and completion of its work. The Small GESA Contractor shall furnish proof of payment for all such items, or proof that no such items are required. No change order will be issued for these costs since they are to be included in the submitted

Energy Audit Report. Sewer and Water Tap-In Fees shall be reimbursed to the Small GESA Contractor by Change Order without mark-up.

5.9. PCCA/UCC Inspections and Compliance with Applicable Laws, etc.

a. The Small GESA Contractor shall give all notices and comply with all applicable laws, ordinances, regulations, rules and orders of any public authority bearing on the performance of the work. If the Small GESA Contractor observes that any of the Contract Documents are at variance therewith in any respect, it shall promptly notify the Small GESA Contractor's Retained Professional and the Funding Agency in writing. Any necessary modifications will be made by the Small GESA Contractor's Retained Professional at no cost to the Funding Agency unless applicable laws, ordinances, regulations, rules and/or orders are changed after the receipt of the Small GESA Contractor's Cost Submittal, If the Small GESA Contractor performs any work knowing it to be contrary to such applicable laws, ordinances, regulations, rules or orders, and without such written notice to the Small GESA Contractor's Retained Professional and the Funding Agency, the Small GESA Contractor assumes full responsibility therefore and shall bear all costs attributable thereto.

b. The Project shall be subject to the Pennsylvania Construction Code Act (PCCA) and the Uniform Construction Code. The Small GESA Contractor shall become familiar, and is responsible for complying, with all aspects of the PCCA and the UCC, including but not limited to the site inspection procedure set forth in the Funding Agency of Labor & Industry's Inspection Procedures. For purposes of inspection, the Small GESA Contractor shall be deemed "the owner" as described in the PCCA/UCC. The most recent list of inspections required by L&I can be found on L&I's website. The Small GESA Contractor must include both the dates for notification to L&I and the date of all PCCA/UCC inspections as milestones in the Project Schedule. The L&I mandated advance notice, defined for each inspection activity, shall be considered and included as lead time in the development of the Project Schedule. The Small GESA Contractor shall assume the responsibility of the permit applicant/permit holder as applicable. The Small GESA Contractor shall be responsible to contact L&I to schedule the required inspections in accordance with the inspection procedures outlined in the Building Permit. Failure to do so shall not be cause for a delay claim against the Funding Agency.

5.10. Existing Utilities.

a. The Small GESA Contractor shall comply with all notification requirements established by applicable law relative to protection of underground utilities and shall also check the location of existing utilities required to remain in place, including those overhead or underground, and take all necessary precautions to prevent injury or damage during the performance of the Work.

b. If performing excavation, the Small GESA Contractor is responsible for costs associated with locating all existing underground utilities prior to commencing excavation, including utilities that are owned and operated by the Funding Agency.

c. The Small GESA Contractor shall be responsible for the costs associated with utility interruption and repair due to any excavation if the utility location was not requested and/or proper location procedures were not performed and/or followed prior to commencing excavation.

d. If the Small GESA Contractor damages a utility, the Small GESA Contractor shall immediately notify the utility company and the Funding Agency and assume all costs of repairing or relocating the service of any utility disrupted due to excavation, or any Small GESA Contractor action, whatever the circumstance. The Funding Agency reserves the right to immediately restore the service of any utility disrupted due to actions of the Small GESA Contractor and to invoice the Small GESA Contractor for payment. Payment of invoice is due within 30 days of date of invoice.

e. Utilities and/or other service which are shown or not shown but encountered shall be protected by the Small GESA Contractor from any damage from any Work and operations of the Small GESA Contractor, unless or until they are abandoned.

5.11. Interruption of Existing Services. Whenever it becomes necessary to interrupt existing services in use by the Funding Agency, such as sewer, water, gas, steam, and electric, the Small GESA Contractor shall perform the Work during such hours as required by and in coordination with the Funding Agency, so as to complete the Work and restore all existing services with minimal interruption or disruption to the Funding Agency. The Small GESA Contractor shall continue its work on a twenty-four hour bases until the Work is completed and the services restored or at such alternate time required by the Funding Agency. Before beginning the Work, the Small GESA Contractor shall apply in writing and receive acceptance in writing from the Funding Agency to establish a time when interruption of the service will cause minimum interference with the activities of the Funding Agency. The Small GESA Contractor's request to interrupt service must be submitted to the Funding Agency at least 15 calendar days prior to the date desired for interruption.

5.12. Small GESA Contractor Performing Excavation or Demolition. If the Small GESA Contractor performs excavation or demolition work, the Small GESA Contractor shall fully comply with the requirements of Underground Utility Line Protection Law, Act 287-74, as amended, approved December 10, 1974, relative to protection of underground utilities.

5.13. Cleaning the Project. The Small GESA Contractor shall be responsible for the cost of cleaning and removing from the site its identifiable debris, including but not limited to, bulky debris, packaging containers, unused materials and equipment and materials not suitable for disposal by standard commercial procedures, such as masonry, concrete materials, crates and combustible items. Good housekeeping shall be observed at all times, and waste, debris, and garbage shall be removed daily or placed in appropriate waste containers outside of the work place and all materials, tools and equipment shall be stored in a safe and orderly fashion.

5.14. Tests. If the Contract Documents, laws, ordinances, rules, regulations or orders of any public authority having jurisdiction that are in effect at the time of the effective date of a Small GESA Contract require any work to be inspected, tested or approved, the Small GESA Contractor shall give the Funding Agency timely notice of its readiness and of the date arranged, so the Funding Agency may observe such inspection, testing or approval. The Small GESA Contractor shall bear all costs of such inspections, tests and approvals, unless otherwise provided.

5.15. Certificates of Inspection. The Small GESA Contractor is responsible to secure any required certificates of inspection, testing or approval. Such required certificates of inspection, testing and approval include those required by the PCCA/UCC. The Small

GESA Contractor shall be delivered to the Small GESA Contractor's Retained Professional and the Funding Agency.

5.16. Observation of Testing. The Small GESA Contractor's Retained Professional and, where required by the PCCA/UCC, L&I, shall observe the inspections, tests or approvals and it shall be the Small GESA Contractor's responsibility to serve sufficient notice to the Small GESA Contractor's Retained Professional and, where required by PCCA/UCC, to L&I of such inspections, tests or approvals to enable the timely inspection of the Work without impacting the Project Schedule.

5.17. Effect of Tests. Neither the observations of the Small GESA Contractor's Retained Professional nor inspections, tests or approvals by persons other than the Small GESA Contractor shall relieve the Small GESA Contractor from its obligations to perform the Work in accordance with Contract Documents.

5.18. Environmental Quality Control. The Small GESA Contractor and its Subcontractors shall perform their work in a manner that minimizes the possibility of air, water, land and noise pollution.

5.19. Solid Waste. Storage, collection, transportation and final disposal of solid waste shall be in accordance with the Solid Waste Management Act regulations and standards of the Department of Environmental Protection (DEP). Immediately upon the effective date of a Small GESA Contract, the Small GESA Contractor shall obtain, at its cost, the necessary permit(s) from DEP and conduct waste disposal to sites approved under this permit. A copy of this permit must be submitted to the Funding Agency before commencing waste disposal. A record of receipt of the waste material that is signed by the waste company certified to receive the waste material acknowledging receipt and proper disposal must be provided to the Funding Agency.

5.20. Compliance with Statutes and Regulations Administered by DEP. The Small GESA Contractor shall comply with all statutes and regulations of the Commonwealth of Pennsylvania concerning environmental quality control administered by DEP. The Small GESA Contractor is responsible for any violations and shall secure all required permits. The Small GESA Contractor's Retained Professional, if required, shall obtain an erosion control permit.

5.21. Suspension from Metal Roof Decks – New and Existing. Ductwork, conduit, ceiling systems, lighting fixtures or any other miscellaneous equipment shall not be suspended from metal roof decks. These components shall only be suspended from the structural members or a suspension system supported by the structural members. All concentrated loads must be reviewed and approved by the Small GESA Contractor's Retained Professional.

5.22. Insulation. All insulation incorporated into the Project **must** contain the minimum percentage of postconsumer recovered paper or recovered material as shown below for the applicable product:

Material Type	Percent by Weight
Cellulose loose – fill and spray on	75% postconsumer recovered paper
Perlite Composite Board	23% postconsumer recovered paper
Plastic rigid foam, polyisocyanurate/polyurethane	
1.1 Rigid Foam	9% recovered material

Material Type	Percent by Weight
1.2 Foam-in-Place	5% recovered material
1.3 Glass Rigid Foam	6% recovered material
1.4 Phenolic Rigid Foam	5% recovered material
1.5 Rock Wool	50% recovered material

5.23. Enforcement of Insulation Requirement. The Small GESA Contractor may be required to provide the Funding Agency with documentary evidence that the insulation provided for the Project was produced with the required minimum percentage of postconsumer recovered paper or recovered material.

5.24. Landscaping Recycled Products Content. All landscaping products included in the final product and sold to the Commonwealth **MUST** contain the minimum percentage of postconsumer and recovered material content as shown below for the applicable products:

Landscaping Product	Recovered Material Content
Hydraulic Mulch: Paper Wood/Paper	 100% (post-consumer) 100% total
Compost Made From Yard Trimmings and/or Food Waste	Purchase or use of compost made from yard trimmings, applications such as landscaping, seeding of grass or other plants, as nutritious mulch under trees and shrubs, and in soil erosion control reclamation. The Funding Agency further recommends implementing a composting system for these materials when agencies have an adequate volume and sufficient space.
Garden Hose: 1.6 Rubber and/or Plastic Soaker Hose: 1.7 Rubber and/or Plastic	 60% (post-consumer) 60% (post-consumer)
Lawn and Garden Edging 1.8 Rubber and/or Plastic	 30% post-consumer/30-100% total

The Small GESA Contractor shall submit certification that the landscaping product(s) which the Small GESA Contractor used contains the required minimum percentage of post-consumer and recovered material content as shown in this chart. In addition, a Manufacturer's Certification must be completed and signed by the manufacturer before payment will be made to the Small GESA Contractor for the delivered items. The Manufacturer's Certification must indicate, at a minimum, the manufacturer's federal id number, this project number, and the following paragraph:

I, the undersigned officer of the manufacturer do hereby certify that I am authorized to provide this certification on behalf of the manufacturer and that the type of construction product(s) listed above which my company furnished to the Small GESA Contractor on this project contained not less than _____% post-consumer materials and _____%

recovered materials as those terms are defined in these General Conditions. I understand that this document is subject to the provisions of the Unsworn Falsification to Authorities Act, 18 P.S. §4904. The Funding Agency shall have no obligation to pay for item(s) until a properly completed and signed Manufacturer's Certification is submitted.

5.25. Construction Products Recycled Content. All construction products offered by the Contractor, or included in the final product offered by the Contractor and sold to the Commonwealth must contain the minimum percentage of postconsumer and recovered material content as shown in the chart below for the applicable products.

Construction Products	Material	% of Post-Consumer Materials	% of Total Recovered Materials
Structural Fiberboard	Recovered Materials	-	80
Laminated Paperboard	Post-consumer Paper	100	-
Rock Wool Insulation	Slag	-	75
Fiberglass Insulation	Glass Cullet	-	20
Cellulose Insulation (loose-fill and spray-on)	Post-consumer Paper	75	-
Perlite Composite Board Insulation	Post-consumer Paper	23	-
Plastic Rigid Foam, Polyisocyanurate/ Polyurethane: Rigid Foam Insulation	Recovered Material	-	9
Foam-in-Place Insulation	Recovered Material	-	5
Glass Fiber Reinforced Insulation	Recovered Material	-	6
Phenolic Rigid Foam Insulation	Recovered Material	-	5
Floor Tiles (heavy duty/commercial use)	Rubber Plastic	90 -	- 90
Patio Blocks	Rubber or Rubber Blends Plastic or Plastic Blends	90 -	- 90
Polyester Carpet Fiber Face	Polyethylene terephthalate (PET) resin	25	-
Latex Paint: 1.9 Consolidated[1] 1.10Reprocessed[2] White, Off-White, Pastel Colors Grey, Brown, Earthtones, and Other Dark Colors	 Recovered Material Recovered Material Recovered Material	 100 20 50	 - - -
Shower and Restroom Dividers/Partitions:	Plastic Steel[4]	20 16 67	- 9 33
Carpet Cushion: Bonded Polyurethane Jute Synthetic Fibers Rubber	 Old Carpet Cushion Burlap Carpet Fabrication Scrap Tire Rubber	 15 40 - 60	 - - 100 -
Railroad Grade Crossing Surfaces 1.11 Concrete 1.12 Rubber[3]	 Coal Fly Ash Tire Rubber	 - -	 15 85

[1] Consolidated latex paint used for covering graffiti, where color and consistency of performance are not primary concerns.
[2] Reprocessed latex paint used for interior and exterior architectural applications such as wallboard, ceiling, and trim; gutterboards; and concrete, stucco, masonry, wood, and metal surfaces.

See next page for continuation of footnotes

[3]The recommended recovered materials content for rubber railroad grade crossing surfaces are based on the weight of the raw materials, exclusive of any additives such as binders or additives

Construction Products	Material	% of Post-Consumer Materials	% of Total Recovered Materials
1.13 Steel[4]	Steel	16 67	9 33

The Small GESA Contractor shall submit certification that the landscaping product(s) which the Small GESA Contractor used contains the required minimum percentage of post-consumer and recovered material content as shown in this chart. In addition, a Manufacturer's Certification must be completed and signed by the manufacturer before payment will be made to the Small GESA Contractor for the delivered items. The Manufacturer's Certification must indicate, at a minimum, the manufacturer's federal id number, this project number, and the following paragraph:

I, the undersigned officer of the manufacturer do hereby certify that I am authorized to provide this certification on behalf of the manufacturer and that the type of construction product(s) listed above which my company furnished to the Small GESA Contractor on this project contained not less than _____% post-consumer materials and _____% recovered materials as those terms are defined in these General Conditions. I understand that this document is subject to the provisions of the Unsworn Falsification to Authorities Act, 18 P.S. §4904. The Funding Agency shall have no obligation to pay for item(s) until a properly completed and signed Manufacturer's Certification is submitted.

5.26. Storage. The Small GESA Contractor shall provide, at its cost, in a location directed by the Funding Agency, a suitable, substantially watertight storage shed in which it shall store all materials that might be damaged by the weather. A mobile trailer is acceptable. The enclosure shall be situated on site as directed by the Funding Agency. All storage enclosures shall have floors raised at least six (6) inches above the ground on heavy joists or sleepers. Storage sheds shall have sufficient natural ventilation to preclude condensation. The Small GESA Contractor shall maintain the storage shed at its cost and shall remove the shed(s) when directed by the Funding Agency. The Small GESA Contractor shall not store any materials in any existing building or beyond the contract limits as defined by the drawings without prior written authorization from the Funding Agency.

5.27. Operation and Maintenance Instruction Manuals. The Small GESA Contractor shall, for its scope of work, carefully compile during the progress of the Work indexed Operation and Maintenance Manuals to include methods of care and cleaning of all types of visible surface materials, both interior and exterior, and descriptions of all systems and equipment and methods of operations thereof. Descriptions shall give pertinent diagrams, identifying charts, color coding, connections, lubricating instructions, and single line and detailed wiring diagrams, using manufacturers' printed information where possible. Where manufacturers' printed information is not available, the Small GESA Contractor shall obtain written instructions prepared by subcontractors and sub-subcontractors. The Small GESA Contractor shall include names, addresses and phone numbers of all subcontractors and sub-subcontractors, and of service firms of each mechanical item, for the Funding Agency' use after expiration of the guarantee period.

[4] The recommended recovered materials content levels for steel in this table reflect the fact that the designated items can be made from steel manufactured from either a Basic Oxygen Furnace (BOF) or an Electric Arc Furnace (EAF). Steel from the BOF process contains 25-30% total recovered materials, of which 16% is post-consumer steel. Steel from the EAF process contains a total of 100% recovered steel, of which 67% is post-consumer.

Prior to Final Inspection, the Small GESA Contractor shall submit a final draft of the manual in a loose-leaf binder for approval by the Small GESA Contractor's Retained Professional and the Funding Agency. After approval and before final payment, the Small GESA Contractor shall furnish two (2) corrected, indexed, bound copies and one (1) electronic copy in the Funding Agency accepted formats and media to the Funding Agency for issuance to the Funding Agency no later than Final Inspection.

5.28. As-Built Record Drawings. No later than Final Inspection, the Small GESA Contractor shall prepare and deliver to the Funding Agency through its Retained Professional a complete set of contract prints, corrected with suitable markings to show all changes or variations from the original contract, including all items uncovered during the Work and showing the details of the Work as actually built, including but not limited to horizontal and vertical dimensional references of all concealed pipe, conduit and other lines and equipment.

5.29. Warranty and Guarantee. In addition to the Contract Bond, the Small GESA Contractor shall unconditionally warrant and guarantee equipment, materials and workmanship against defects arising from faulty equipment, faulty materials, faulty workmanship or negligence for a period of twelve (12) months following the date of Final Inspection of the Work or beneficial occupancy (whichever occurs first) unless other warranties found within the Contract Documents specify or indicate longer periods. The Small GESA Contractor shall replace such defective equipment, materials or workmanship without cost to the Funding Agency. The Small GESA Contractor warrants that such replacement equipment, material or workmanship furnished under this provision shall be furnished in conformance with the Contract Documents for an additional twelve (12) months from the completion of the replacement work. The Small GESA Contractor shall warrant that such equipment, material or workmanship furnished under this Small GESA Contractor shall be furnished in conformance with the Contract Documents. All Work not conforming to these standards may be considered non-conforming.

5.30. Taxes. The Small GESA Contractor shall pay all sales, consumer, use and other similar taxes required by law. The Small GESA Contractor shall be familiar with and take full advantage of all sales tax exemptions allowed by the Pennsylvania Department of Revenue. The Small GESA Contractor has an affirmative duty to seek a refund or reimbursement of sales tax from Department of Revenue for costs that were included in the Contract. Once those savings are received by the Small GESA Contractor, they shall be transferred back to the Funding Agency through a credit change order(s). Additional information is available at: http://www.revenue.state.pa.us/portal/server.pt/community/revenue_home/10648 and at: http://www.revenue.state.pa.us/portal/server.pt/community/sales___use_tax/14702. Credit changes orders for such tax refunds or reimbursements shall be equal to the actual tax refund or reimbursement amount(s) less ten percent (10%) for administrative costs.

5.31. Offset of Amounts Due to Commonwealth. The Small GESA Contractor, by execution of the Contract, certifies that it has no outstanding tax liability to Pennsylvania; authorizes the Department of Revenue to release information related to its tax liability to the Funding Agency; and authorizes the Commonwealth to offset the amount of any state tax or Small GESA Contractor liability owed to the Commonwealth by the Small GESA Contractor or its affiliates and subsidiaries, as well as any other amount due to the Commonwealth from the Small GESA Contractor not being contested on appeal by the Small GESA Contractor, against any payments due the Small GESA Contractor

under this or any other contract with the Commonwealth. The certification of no outstanding tax liability is a material representation of fact, which the Funding Agency relies upon in entering into the Contract. If it is later determined that the Small GESA Contractor knowingly rendered an erroneous certification, the Funding Agency may find the Small GESA Contractor in default and terminate the Contract. Such erroneous certification may also be grounds for initiation of civil, criminal and/or debarment proceedings.

5.32. Nondiscrimination and Sexual Harassment. During the term of the Contract the Small GESA Contractor agrees as follows:

1. In the hiring of any employee(s) for the manufacture of supplies, performance of work, or any other activity required under the contract or any subcontract, the Contractor, each subcontractor, or any person acting on behalf of the Contractor or subcontractor shall not discriminate in violation of the *Pennsylvania Human Relations Act* (PHRA) and applicable federal laws against any citizen of this Commonwealth who is qualified and available to perform the work to which the employment relates.

2. Neither the Contractor nor any subcontractor nor any person on their behalf shall in any manner discriminate in violation of the PHRA and applicable federal laws against or intimidate any employee involved in the manufacture of supplies, the performance of work, or any other activity required under the contract.

3. The Contractor and each subcontractor shall establish and maintain a written nondiscrimination and sexual harassment policy and shall inform their employees of the policy. The policy must contain a provision that sexual harassment will not be tolerated and employees who practice it will be disciplined. Posting this Nondiscrimination/Sexual Harassment clause conspicuously in easily-accessible and well-lighted places customarily frequented by employees and at or near where the contract services are performed shall satisfy this requirement.

4. The Contractor and each subcontractor shall not discriminate in violation of PHRA and applicable federal laws against any subcontractor or supplier who is qualified to perform the work to which the contract relates.

5. The Contractor and each subcontractor represents that it is presently in compliance with and will maintain compliance with all applicable federal, state, and local laws and regulations relating to nondiscrimination and sexual harassment. The Contractor and each subcontractor further represents that it has filed a Standard Form 100 Employer Information Report ("EEO-1") with the U.S. Equal Employment Opportunity Commission ("EEOC") and shall file an annual EEO-1 report with the EEOC as required for employers subject to *Title VII* of the Civil Rights Act of 1964, as amended, that that have 100 or more employees and employers that have federal government contracts or first-tier subcontracts and have 50 or more employees. The Contractor and each subcontractor shall, upon request and within the time periods requested by the Commonwealth, furnish all necessary employment documents and records, including EEO-1 reports, and permit access to their books, records, and accounts by the contracting agency and the Bureau of Small Business Opportunities (BSBO), for purpose of ascertaining compliance with provisions of this Nondiscrimination/Sexual Harassment Clause.

6. The contractor shall include the provisions of this Nondiscrimination/Sexual Harassment Clause in every subcontract so that those provisions applicable to subcontractors will be binding upon each subcontractor.

7. The Contractor's and each subcontractor's obligations pursuant to these provisions are ongoing from and after the effective date of the contract through the termination date thereof. Accordingly, the Contractor and each subcontractor shall have an obligation to inform the Commonwealth if, at any time during the term of the contract, it becomes aware of any actions or occurrences that would result in violation of the provisions.

8. The Commonwealth may cancel or terminate the contract and all money due or to become due under the contract may be forfeited for the violation of the terms and conditions of this Nondiscrimination/Sexual Harassment Clause. In addition, the agency may proceed with debarment or suspension and may place the Contractor in the Contractor Responsibility File.

ARTICLE 6

SUBCONTRACTORS

6.1 **Small GESA Contractor's Interest in Subcontractor**. Pursuant to the Contractor Integrity Provisions (included in the RFP), a Small GESA Contractor may not, except with the consent of the Commonwealth, have a financial interest in any other Contractor, Subcontractor, or Supplier providing services, labor, or material on this project. The Small GESA Contractor will be requested to disclose the names of all Subcontractors and/or Suppliers in which the Small GESA Contractor has a financial interest, and which will be utilized in the Project. This information must be disclosed on Form GSC-23, Request for Approval of Materials and/or Subcontractors. If the Funding Agency has a reasonable objection to the proposed Subcontractors and/or Suppliers, the Small GESA Contractor shall promptly propose another Subcontract and/or Supplier to whom the Funding Agency does not have an objection. The Funding Agency's acceptance of the Subcontractors and/or Suppliers will be deemed to be consent for the purposes of Contractor Integrity Provisions. Failure to disclose the names of such Subcontractors and/or Suppliers is sufficient grounds for termination of this Contract. Such failure may also be grounds for the initiation of civil or criminal proceedings. The Small GESA Contractor shall not replace any Subcontractor and/or Supplier previously selected and/or accepted by the Funding Agency, without prior written notification to the Funding Agency and receipt of the Funding Agency's written acceptance for such substitution.

6.2 **Subcontractor/Supplier Responsibility.** If the Small GESA Contractor enters into any subcontracts or purchase orders under this Contract with Subcontractors or Suppliers currently suspended or debarred by the Commonwealth, or who become suspended or debarred by the Commonwealth during the term of this Contract or any extensions or renewals of it, the Funding Agency may require the Small GESA Contractor to terminate such Contract.

6.3 **Small GESA Contractor Responsibility for Actions and Compliance.** The Small GESA Contractor shall be responsible for all acts of its Subcontractors and Suppliers utilized under this Contract, and for their compliance with all terms and provisions of the Contract applicable to their performance. The Small GESA Contractor shall

continuously coordinate the Work of all Subcontractors to assure proper processing and progress of the Work.

a. The Small GESA Contractor shall require each Subcontractor to comply with the following:

1) Examine the shop drawings and the Work of other subcontractors and all sections of the specifications to the extent necessary for satisfactory installation of its Work, and connection between its Work and the Work of other subcontractors; and
2) Coordinate its Work accordingly; and
3) Cooperate with other subcontractors toward timely and satisfactory completion of the Project.

b. Subcontractors proposed by the Small GESA Contractor will not be acceptable to the Funding Agency if evidence exists or arises during the Work that the Subcontractors are unable or unwilling to comply with the requirements of the Contract Documents which govern the Work of the Subcontractors involved, or if the Subcontractors have experience which is inconsistent with requirements for the Work of the Subcontractors. In the event a Subcontractor is or becomes unacceptable to the Funding Agency, the Small GESA Contractor will not be entitled to a change in the Contract Sum or Contract Duration and shall propose substitute Subcontractors for unacceptable Subcontractors.

c. The failure of any Subcontractor to complete its portion of the Work in a satisfactory manner within the proper time will not relieve the Small GESA Contractor of responsibility for the proper and satisfactory execution and completion of the entire Work.

6.4 **Acts and Omissions of Subcontractors.** The Small GESA Contractor acknowledges its full responsibility to the Funding Agency for the acts and omissions of its Subcontractors, and of the persons and firms either directly or indirectly employed by them, equally to the extent that the Small GESA Contractor is responsible for the acts and omissions of persons and firms directly or indirectly employed by it. The Small GESA Contractor acknowledges that it remains fully responsible for the proper performance of its Contract whether work is performed by the Small GESA Contractor's own forces or by Subcontractors engaged by the Small GESA Contractor.

6.5 **Subcontracts and Purchase Orders.**

a. Subcontractors:

1) All Work performed for the Small GESA Contractor by a Subcontractor shall be done pursuant to a written subcontract between the Small GESA Contractor and the Subcontractor.
2) The form of the written subcontracts may vary at the discretion of the Small GESA Contractor, but must contain the provisions noted below.
3) All subcontracts between the Small GESA Contractor and each Subcontractor **must**:
   - **i.** Be signed by both parties;
   - **ii.** Contain Provisions that:
     - A. Set forth the amount the Subcontractor is to be paid; and
     - B. Describe the scope of Work to be performed by the Subcontractor; and

C. Preserve and protect the rights of the Funding Agency and the Professional under the Contract with respect to the Work to be performed under the Subcontract, so that the subcontracting thereof will not prejudice such rights; and

D. Require that such Work be performed in accordance with the requirements of the Contract Documents; and

E. Require submission to the Small GESA Contractor of applications for payment under each Subcontract to which the Small GESA Contractor is party, in reasonable time to enable the Small GESA Contractor to apply for payment in accordance with the provisions of the Prompt Payment Act (62 Pa. C. S. §3901 *et seq*.) and the provisions of these General Conditions governing payment by the Funding Agency; and

F. Prior to commencing onsite or offsite work, require each Subcontractor to comply with the provisions of the Public Works Employment Verification Act (43 P.S. §§ 167.1 – 167.11), which requires subcontractors to utilize the Federal E-Verify program to verify the employment eligibility for every new employee hired after January 1, 2013 and to submit to the Department a Commonwealth Public Works Verification Form available on the Department's web site at www.dgs.state.pa.gov; and.

G. Require each Subcontractor to include provisions in each of its subcontracts regarding the applicability of the Public Works Employment Verification Act (43 P.S. §§ 167.1 – 167.11), information regarding the use of the Federal E-Verify program, and reference to the Department's web site to obtain a downloadable copy of the Commonwealth Public Works Employment Verification Form required to be submitted to the Department.

H. Require that all claims for additional costs, extensions of time or otherwise with respect to subcontracted portions of the Work shall be submitted to the Small GESA Contractor in the manner provided in the Contract Documents for like claims by the Small GESA Contractor upon the Funding Agency; and

I. Require acknowledgement by the Subcontractor that the Subcontractor is without privity of Contract with the Funding Agency and that the Subcontractor agrees by signing the Subcontract

that it neither acquires or intends to acquire any rights against the Funding Agency on a third party beneficiary theory or any other theory; and

J. Require each Subcontractor to notify its Subcontractors, in writing, that their rights of recovery against the bond of the Small GESA Contractor for failure of payment may not be exercised unless the Small GESA Contractor is notified of the claim within ninety (90) days from the last performance of labor or provision of materials and/or equipment; and

K. Obligate each Subcontractor to specifically consent to all provisions of this Article of the General Conditions of the Contract; and

L. Contain the following certification language:

Certification: I, the undersigned officer of the Small GESA Contractor, do certify that, to the best of my knowledge, this subcontract complies with the provisions of the Subcontractor Article of the General Conditions of the Contract with the Funding Agency. I understand that by signing this document I certify that this document is subject to the provisions of the Unsworn Falsifications to Authorities (18 P.S. §4904). I acknowledge that if my company does not comply with the terms of the Subcontractor Article my firm may be subject to suspension for a period up to three (3) months and/or debarment from bidding on any Commonwealth of Pennsylvania Public Works Projects for a period of three (3) years.

4) The Small GESA Contractor agrees that failure to incorporate these terms in its Subcontracts is a material breach of the terms of the Contract Documents. The Small GESA Contractor will have five (5) days, as required by the Administrative Procedures, to provide proof in writing that such a deficiency in its subcontract documents has been remedied. Failure to provide written proof within five (5) days shall constitute grounds for default of the Small GESA Contractor by the Funding Agency.
5) The Small GESA Contractor shall submit one copy plus an electronic copy of all subcontracts for Work to be performed on the Project to the Funding Agency, or its designee, for the Project prior to the commencement of any Work by the Subcontractor.
6) The Small GESA Contractor shall also submit a copy of every subcontract with a SDB to the Bureau of Diversity, Inclusion and Small Business Opportunities.
7) The Small GESA Contractor shall submit to the Funding Agency a list of its subcontractors' personnel to be in attendance at the site or Job Conferences, their duties and responsibilities and their addresses and

cell phone numbers. Once construction by a subcontractor begins at the project site, the subcontractor shall be represented by a duly authorized and competent superintendent, whenever it is carrying out any work on the site. The subcontractor may not change its superintendent, unless it provides, in writing, justification for the change, along with the name and qualifications of the individual whom the Small GESA Contractor proposes to be the subcontract superintendent. The Funding Agency may demand that the Small GESA Contractor dismiss from the project any person subcontracted by the Small GESA Contractor whom the Funding Agency determines is incompetent or guilty of misconduct. The Funding Agency may withhold any payments, which are or may become due to the Small GESA Contractor, or the Funding Agency may suspend the work at the expense of the Small GESA Contractor, if the Small GESA Contractor fails to comply with the provisions of this paragraph.

b. Suppliers:

1) Suppliers do not have to sign Purchase Orders.
2) The Small GESA Contractor shall submit one (1) certification letter, on the Small GESA Contractor's letterhead, with language identical to that set forth in the sample letter included as part of the Administrative Procedures governing Supplier and Subcontractor approvals. This one (1) letter, which shall apply to all purchase orders, shall certify the Small GESA Contractor's compliance with the terms set forth in the letter. The language required by the Administrative Procedures to be included in the letter shall not be altered in any way.
3) The Small GESA Contractor shall submit this certification letter to the Funding Agency **prior to the delivery of any material and/or equipment by any Supplier.**
4) For every purchase order with a SDB Supplier, the Small GESA Contractor shall submit a copy of the purchase order to Bureau of Small Business Opportunities
5) The Small GESA Contractor shall identify all material and/or equipment that will be supplied by a SDB Supplier.

6.6 **No Contractual Relationship between The Funding Agency and Subcontractor.** Nothing contained in the Contract Documents creates any contractual relationship between the Funding Agency and any Subcontractor, Sub-Subcontractor or any of its authorized representatives. Nothing in the Contract Documents between the Funding Agency and the Small GESA Contractor should be construed to authorize any person not a party to the Standard Form of Contract to maintain any lawsuit involving that contract, unless otherwise provided by law.

6.7 **No Contractual Relationship between The Funding Agency and Supplier.** Nothing contained in the Contract Documents creates any contractual relationship between the Funding Agency and any Supplier or its authorized representatives. Nothing in the Contract Documents between the Funding Agency and the Small GESA Contractor should be construed to authorize any person not a party to the Standard Form of Contract to maintain any lawsuit involving that contract, unless otherwise provided by law.

6.8 **Payment of Subcontractor by Small GESA Contractor Governed By Prompt Payment Schedule.** Payments to the Subcontractor are subject to the provisions of Section 3931 *et seq.,* Subchapter D, *"Prompt Payment Schedules"* of Title 62 Procurement. The general description set forth in the General Conditions does not relieve the Small GESA Contractor from strict compliance with the requirements of the Prompt Payment Act. Nothing described in these General Conditions is intended to impose a duty greater than that imposed by the Prompt Payment Act. In the event of any discrepancy between this language and the language of the Act, the Act controls.

6.9 **Failure of The Funding Agency to Release Progress Payment.** If the Funding Agency fails to approve release for payment of some or all of an accepted Application for Payment for any cause which is the fault of the Small GESA Contractor and not the fault of a particular Subcontractor, the Small GESA Contractor shall pay that Subcontractor, upon demand made by the Subcontractor at any time after the accepted Application for Payment should otherwise have been issued, for its Work to the extent completed, less the retained percentage.

6.10 **Percentage of Completion.** The Funding Agency may, on request, furnish to any Subcontractor, if practicable, information regarding percentages of completion certified to the Small GESA Contractor on account of work done by such Subcontractor.

6.11 **No Obligation on Part of The Funding Agency to Pay Subcontractor or Supplier.** Subcontractor or Supplier issues concerning delayed and non-payment should be addressed to the Small GESA Contractor and the Small GESA Contractor's payment bond surety. The Funding Agency shall have no obligation to pay or to ensure the payment of any moneys to any Subcontractor or Supplier except as may otherwise be required by law. Subcontractors and Suppliers acknowledge they have no direct cause of action (unless otherwise provided by law) against The Funding Agency relating to any payment issues.

6.12 **Subcontractor and Supplier Claims.** The Small GESA Contractor agrees to require the Subcontractor and/or Supplier to submit all claims for extras, extensions of time or for damages to the Small GESA Contractor in the manner provided in the Contract Documents for claims by the Small GESA Contractor against the Funding Agency in accordance with the Disputes Article of these General Conditions. Since neither the Subcontractors nor Suppliers have privity of contract with the Funding Agency, they may not pursue a claim directly against the Funding Agency.

ARTICLE 7

PROJECT SCHEDULE

7.1 **Submission of the Baseline Project Schedule** The Baseline Project Schedule is to be submitted to the Funding Agency within thirty (30) days of the Contract Start Date. This schedule shall utilize Primavera and incorporate all activities. The project shall not be submitted in .pdf format, but shall be submitted in .XER format. The Baseline Project Schedule shall include all design, permitting, procurement, construction, inspections and contract closeout activities until the Contract Completion Date.

7.2 Software

a. The Critical Path Method (CPM) of Project Schedule calculation shall be used to generate the project. The schedule need not be cost-loaded; costs and payment will be governed by the GSC-30 Cost Breakdown sheet.

b. The scheduling software that will be utilized on this project is Primavera Project Planner by Primavera Systems, Inc. and "CONTRACTOR" by Primavera Systems, Inc. It is the responsibility of the Small GESA Contractor to ensure all data elements and logic required by this specification is kept intact during any upgrade associated with Primavera. CONTRACTOR may be used to develop the schedule only. The elements developed in CONTRACTOR will be migrated to P6.

c. The Small GESA Contractor may utilize any Primavera product fully compatible with P6 in developing the schedule. The following programs are not considered compatible with P6:

i. Microsoft Project (all versions)

ii. Primavera products P3 and earlier.

7.3 Project Schedule Overview

a. The Funding Agency Reservation of Rights. The Funding Agency reserves the right to accept the Project Schedule developed, signed and submitted by the Small GESA Contractor, while preserving exceptions to any defects in the means, methods, sequences, durations and/or logic which the Funding Agency believes exist in the schedule. The acceptance of the Project Schedule by the Funding Agency in no way relieves the Small GESA Contractor from the duty to coordinate all activities and shall not make the Funding Agency a guarantor of the Project Schedule. Upon request, the Small GESA Contractor shall provide to the Funding Agency all the planning data used to develop the Project Schedule.

b. Work during Formation of Project Schedule. Until the Baseline Project Schedule is signed by the Small GESA Contractor and accepted by the Funding Agency, the Small GESA Contractor must proceed with the Work utilizing all the information available, including coordination meetings with the subcontractors, attendance at Job Conferences, two week look ahead activities, weekly superintendent's meetings, draft CPM schedules used in the development of the final Project Schedule, and any other means necessary to maintain work progress until such time as the Project Schedule is complete and accepted. As such, the Small GESA Contractor shall not assert any claim whatsoever for any delay or additional cost incurred with the development of the Project Schedule.

c. Applications for Payment.

i. The Small GESA Contractor may submit their first Application for Payment to the Funding Agency 30 days after the beginning of work, but only if the Small GESA Contractor had submitted the 30-day schedule. Payment of the first Application for Payment is

subject to review and approval of the Application by the Funding Agency as being reasonable for the work performed during the first 30-day period.

ii. After the first 30 days, the Funding Agency will only review and pay (if the application is otherwise acceptable) the Small GESA Contractor's Applications for Payment if there is a full Baseline Project Schedule submitted and accepted by the Funding Agency. If the Baseline Project Schedule is not submitted and/or accepted, the Funding Agency will withhold payments to the Small GESA Contractor until such time as there is an accepted Baseline Project Schedule.

iii. After acceptance of the Baseline Project Schedule, the Funding Agency will only review and pay (if the application is otherwise acceptable) the Small GESA Contractor's Applications for Payment as long as the Small GESA Contractor continues to maintain and update the Progress Schedule. If the Small GESA Contractor fails to maintain, update, and submit the Progress Schedule, the Funding Agency will withhold payments to the Small GESA Contractor until such time as there are updates to the Schedule that are accepted by the Funding Agency.

7.4 **Time Is of the Essence**. All time limits stated in the Contract Documents are of the essence. The Small GESA Contractor shall perform the Work expeditiously with adequate forces using all calendar days to complete the Work no later than the Contract Completion Date.

a. The Small GESA Contractor is responsible to expedite development of the Project Schedule, as it pertains to their work effort, planning, execution and inter-contractor relationship logic.

b. Submission of progress and revision data will be used to measure work progress, as an aid to evaluate time extensions, and to provide the basis of all progress payments.

c. The Small GESA Contractor shall designate a responsible representative that is knowledgeable about how the project will be executed and is empowered to make scheduling decisions as the Project Schedule is developed.

d. The Project Schedule is to be implemented by the Small GESA Contractor, utilizing the services of a qualified subcontractor or its own in-house staff. The Small GESA Contractor/subcontractor must also provide evidence of at least five years scheduling experience of its staff with projects of similar size and nature.

7.5 **Schedule Requirements.** The minimum number of construction activities in the Project Schedule diagram shall be at a level to describe a discreet amount of work that can be accomplished within a fixed time frame.

d. No activity, except for a design or procurement activity, shall have durations greater than 30 calendar days. Upon written request from the Small GESA

Contractor and written agreement of the Funding Agency, the maximum duration for an activity may be extended beyond 30 calendar days.

e. Separate subcontractors and other outside (the Funding Agency or others) activities that could impact progress shall be clearly identified. These activities include, but are not limited to: approval of submittal reviews, inspections/tests, utility outages, and delivery of equipment.

i. Show activities indicating furnished materials and equipment utilizing delivery dates supplied by others.

ii. External contractors' or others' activities will be driven by calendars that reflect Saturdays, Sundays and all State Holidays as non-work days unless any additional costs for these being work days are borne by the Small GESA Contractor.

f. UCC Inspections and Testing. The Project Schedule shall consider and include all time durations associated with UCC Inspection criteria by the Department of Labor and Industry, along with all other testing and inspections required by contract. It must take into account the advance notice needed for L&I Inspectors as defined by the UCC Building Permit criteria.

g. During the development of the Project Schedule, as a minimum, the Small GESA Contractor shall facilitate utilization of:

i. Work Breakdown Structures (WBS) and activity coding;

ii. Establishment of design and engineering activities;

iii. Establishment of procurement activities;

iv. External contractor and the Funding Agency activities;

v. Construction activities; and

vi. Activity relationship, resourcing, budget costs and reports to be used during the project.

h. No more than 15 percent of the activities may be critical or near critical. Critical is defined as having zero days of Total Float. "Near critical" is defined as having Total Float less than 10 days.

i. Scheduled Project Duration: The schedule duration shall extend from the date of the Project Start Date to the Contract Completion Date.

j. Milestones. A Milestone is to signify the start or finish date of a specific activity that is significant to completing the Project on schedule.

i. The Project Schedule shall identify Design or Procurement Milestones for the Project. Milestones that are not completed as planned may require a Recovery Plan from the Small GESA Contractor.

ii. The Project Schedule shall identify Construction Progress Milestones for the Project. Milestones that are not completed as

planned may require a Recovery Plan from the Small GESA Contractor.

iii. The Master Summary Schedule submitted with the Small GESA Contractor's Proposal to the Funding Agency will serve as the basis for the Baseline Project Schedule. The Milestone dates shown on the Master Summary Schedule submitted with the Small GESA Contractor's Proposal shall not be change without prior written acceptance from the Funding Agency.

k. The use of Resource Leveling or similar techniques intended to artificially adjust activity durations to consume float and influence the critical path will not be used.

l. Use of float suppression techniques, such as; preferential sequencing (arranging critical path through activities more susceptible to an owner caused delay), special lead/lag logic restraints, zero total or free float constraints, extended activity times, or imposing constraint dates other than as required by the contract, shall not be used.

m. Leads or lags will not be used when the creation of an activity will perform the same function (e.g., concrete cure time). Lag durations contained in the project schedule shall not have a negative value. The use of any lead or lag must be justified and documented.

7.6. Design Activities

a. Design activities shall include, but are not limited to: Tasks related to site planning, final design, specifications, the Funding Agency reviews, regulatory requirements, permitting, design progress meetings, etc. Small GESA Contractor, Retained Professional, the Funding Agency and any regulatory agency activities will be driven by calendars that reflect Saturdays, Sundays and all State Holidays as non-work days unless any additional costs for these being work days are borne by the Small GESA Contractor

b. Design Activities will have the same properties as Construction Activities.

c. Failure to include adequate time for the Funding Agency design reviews in the Project Schedule will be cause for rejection of the submission.

d. List design activities as they will be completed. Design activities should be concurrent with construction activities. Design activities will be discreet in description so as to define the particular efforts associated with any one particular building, area, site or system.

7.7. Construction Activities

a. Construction activities shall include, but are not limited to: Tasks related to mobilization/demobilization; submittal and review activities, the installation of temporary or permanent work by tradesman; testing and inspections of installed work by technicians, inspectors or engineers; start-up and testing of equipment; site management and cleaning, commissioning of building and related systems; scheduling of specified manufacturer's representatives; final clean-up; training to be provided; and administrative tasks necessary to start,

proceed with, accomplish or finalize the contract. Small GESA Contractor activities will be driven by calendars that reflect Saturdays, Sundays and all State Holidays as non-work days unless any additional costs for these being work days are borne by the Small GESA Contractor.

b. List items of construction as they will be installed. When more than one building, level or floor is included, each building, level or floor shall be listed separately.

7.8. Procurement Activities

a. Tasks related to the procurement of material or equipment shall be included as separate activities in the project schedule. Examples of procurement activities include, but are not limited to:

i. Material/equipment submittal preparation.

ii. Submittal and approval of material/equipment.

iii. Material/equipment fabrication and delivery.

iv. Delivery of O&M manuals.

b. If the Small GESA Contractor intends on using Just-In-Time (JIT) delivery methods, the schedule will show each JIT delivery with relationship tie to the Construction Activity specifically for the JIT delivery.

c. The Small GESA Contractor must meet the Funding Agency criteria for payments for Stored Materials specified in the Administrative Procedures prior to any payments (i.e. 'completion' of the procurement activity.)

7.9. Small GESA Contractor Anticipated Weather Delays – Schedule activity duration(s) shall be formulated with consideration for normal adverse weather conditions. Any activity duration which could be impacted by adverse weather, shall include an adjustment to include the anticipated weather delay.

a. The Contractor shall anticipate weather effect by the Contract Documents to the National Oceanic and Atmospheric Association's (NOAA) historical monthly averages for the NOAA location closest to the project site.

b. A lost workday, due to weather conditions, is defined as a day in which the contractor's workforce cannot work 50 percent or more of the day.

c. The Contractor shall immediately notify the Funding Agency when a lost day has occurred due to weather and will record the event in their Daily Reports.

7.10. Float – Any Total Float available within the Schedule will be a resource available to the Funding Agency and Small GESA Contractor. No time extensions will be granted, or compensable time impact paid unless the impact consumes all available Project Float, and extends the work beyond an Interim Milestone or the Contract Completion Date. Extensions of time to interim milestone dates or the Contract Completion Date under this Contract will be granted only to the extent that time adjustments to the activity or activities affected by the Contract Modification or delay exceeds the total float of the affected or subsequent paths and extends any interim milestone date or the Contract Completion Date. Such determination shall be made at the sole discretion of the Funding Agency.

7.11. **Schedule Acceptance -** The Small GESA Contractor shall submit an electronic version of its Baseline Project Schedule to the Funding Agency as an XER file, unless otherwise requested. When requested, Small GESA Contractor shall also submit hard copy and/or PDF versions, including all requested sort and arrangements and utilizing color printing and plotting of these. The Small GESA Contractor Project Manager in conjunction with the person responsible for the schedule build and the scheduler will submit a narrative of their full project plan, detailing the project execution, methodology to build the Baseline Project Schedule, along with any other documentation supporting the development of the Project Schedule.

a. When the Baseline Project Schedule is accepted, it will be considered the "Baseline Project Schedule". The Baseline Project Schedule will then be used by the Small GESA Contractor for planning, organizing, and directing the work; reporting progress; and requesting payment for work accomplished.

7.12. **Maintaining the Project Schedule.** Small GESA Contractor shall ensure that such manpower, materials, facilities, and equipment is applied to the Work, and shall work such hours, including night shifts, overtime operations, Sundays, and holidays, as may be necessary, to maintain its progress in accordance with the Project Schedule so that no delays are caused to the Project and to insure the progress and completion of the Work within the time allowed by the Contract and as permitted by the Funding Agency. If the Small GESA Contractor fails to maintain progress according to the schedule the Small GESA Contractor shall furnish such additional manpower, equipment, additional shifts or other measures that are necessary, to bring operations up to schedule without any additional cost or expense to the Funding Agency. If the Small GESA Contractor refuses or fails to keep up with the Project Schedule or fails to proceed as directed by the Funding Agency, then the Funding Agency will note this refusal/failure and will consider suspension of the Small GESA Contractor in accordance with Section 531 of the Commonwealth Procurement Code. the Funding Agency may also, in its sole discretion, find the Small GESA Contractor in breach of its Contract and/or declare the Small GESA Contractor in default of its Contract in accordance with the Termination Article of these General Conditions.

7.13. **Project Schedule Updating.** The Project Schedule will be updated using the P6 Web "Reflection file and issued at least once per month by the Small GESA Contractor. At its sole discretion, the Funding Agency may require more frequent updates if deemed necessary to facilitate the Work. The Small GESA Contractor will provide, at least once per month, updates of the Project Schedule to reflect actual progress. If the Project is not on schedule, the Funding Agency reserves the right to request additional updates and recovery schedules, at no cost to the Funding Agency, from the Small GESA Contractor. The Small GESA Contractor shall provide documentation confirming the Monthly Update Meetings, stating the date, time, and attendance. The submittal and acceptance of the Progress Schedule, entry of accurate update information, review and acceptance by the Funding Agency are all conditions precedent to processing pay requests. Submittal of the schedule updates is the Small GESA Contractor's representation that the submitted Progress Schedule meets all of the requirements of the Contract Documents, accurately reflects the work accomplished, and that Work will be executed in the sequence indicated on the Progress Schedule. Work activities will be updated by actual work progression rather than being cash flow driven. The updating of the percent complete and the remaining duration of any activity shall be independent functions; program features that calculate one of these parameters from the other shall

be disabled, as required. Out-of-Sequence progress (if applicable) shall be handled through Retained Logic, not the Default Option of Progress Override. It will be the responsibility of the Small GESA Contractor to resolve out of sequence issues prior to the next issuance of the Small GESA Contractor's payment request. The changes and/or modifications executed in a Recovery Schedule that accomplish this will be submitted and reviewed by the Funding Agency prior to acceptance and implementation into the project schedule.

7.14. **Recovery Plan.** Events that Trigger the Need for a Recovery Plan. The Funding Agency may issue a notice demanding that the Small GESA Contractor submit a Progress Recovery Plan upon the occurrence of any of the following events:

d. The progress of the Work or a single activity falls behind the contract time as shown in a currently updated Project Schedule by more than fifteen (15) calendar days; or

e. A missed milestone; or

f. When an updated Project Schedule provides a completion date past the Contract Completion Date; or

g. When a late finish for any activity does not come within the time allowed by the current Project Schedule.

h. When, in the sole opinion of the Funding Agency, it appears likely that the Work will not be completed within the Contract Time.

The Small GESA Contractor will prepare a Recovery Plan in a Recovery Schedule indicating that all future activities, project completion and occupancy dates will be met within the Contract Duration. The Recovery Plan shall be developed and received by the Funding Agency within three (3) calendar days of receipt of the Recovery Schedule Notice. The Recovery Schedule shall be implemented immediately after written direction from the Funding Agency. In order to create and maintain the Recovery Plan, the Small GESA Contractor agrees to undertake, but not be limited to, some or all of the following actions at no additional cost to the Funding Agency: increase the manpower, the number of working hours per shift, the number of shifts per day, the number of working days per week, the quantity of equipment, or any combination of the foregoing, and reschedule such activities to bring the project back on schedule. Failure of the Small GESA Contractor to comply with these requirements shall be considered grounds for a determination by the Funding Agency that the Small GESA Contractor is failing to prosecute the Work with sufficient diligence to ensure its completion within the Contract Time and is failing to comply with the Contract Time provisions of the Contract. Such determination may result in default and/or suspension and/or debarment of the Small GESA Contractor. the Funding Agency's acceptance of the Recovery Plan does not relieve the Small GESA Contractor of the responsibility for the accuracy of the schedule and for the Small GESA Contractor's obligation to meet the Contract Completion Date. the Funding Agency's acceptance of the Recovery Plan does not constitute acceptance or warranty of the Small GESA Contractor's means, methods, and techniques of construction. The Funding Agency reserves the right to review any Recovery Plan to determine if it satisfies the Project Schedule. If the Recovery Plan does not satisfy the Project Schedule, the Funding Agency may elect to prepare a Recovery Plan, to which the Small GESA Contractor must adhere. The costs incurred by the Funding Agency in

preparing the Recovery Plan will be assessed against the Small GESA Contractor by credit change order.

7.15. Requests for Extensions of Time. All requests for Extensions of Time shall be submitted to the Funding Agency in writing on the form provided in the Administrative Procedures. Reasons substantiating the request shall be included or the request may be denied. Notification of any alleged delay event shall be given to the Funding Agency within two days of the start of such delay. All such formal requests must be filed within ten (10) calendar days of the end of the event or issue that caused the alleged delay. Any EOT shall include a fragnet (defined as the sequence of new activities and/or activity revisions, logic relationships and resource changes that are proposed to be added to the existing schedule to demonstrate the influence of impacts to the schedule) to be used to determine if an EOT is justified. The fragnet shall identify the predecessors to the new activities and demonstrate the impacts to successor activities. Include a narrative report describing the effects of new activities and relationships to interim and contract completion dates, with each TIA. Activity time delays shall not automatically merit an extension of the Contract Completion Date of this Contract.

7.16. Extensions of Time and Impact on Schedule. A change order, field order or delay may not affect existing critical activities or cause non-critical activities to become critical. Change orders, field orders or delays may result in the Funding Agency giving the Small GESA Contractor part of or the entire available total float that may exist within an activity chain on the Network, thereby not causing any effect on any interim milestone date or the Contract Completion Date of this Contract.

i. If the Funding Agency, for any period after the commencement of On-Site Work, grants an Extension of Time to the Small GESA Contractor, the Small GESA Contractor may be required by the Funding Agency to prepare a revised Project Schedule. Based on a Recovery Schedule, if a revised Project Schedule is requested, the Small GESA Contractor must send the revised Project Schedule, signed by the Small GESA Contractor to the Funding Agency within fourteen (14) calendar days of the approval of the Extension of Time.

ii. Upon the granting of an Extension of Time, the monthly updating of the Project Schedule may result in changes in the dates on which activities and the Project itself are expected to be completed. The process of updating the Project Schedule does not constitute the Funding Agency approval of requests for Extensions of Time and does not replace the process of seeking extensions in accordance with both the applicable provisions of these General Conditions and the Administrative Procedures, both of which will be strictly enforced. To substantiate and support any timely filed requests for Extensions of Time, the Small GESA Contractor must submit CPM Schedules (based upon the current Project Schedule in effect at the time the Extension of Time is submitted) with and without the asserted delay. The Small GESA Contractor must also establish that the delay is justifiable in accordance with the Requests for Extensions of Time paragraph of these General Conditions. Data drawn from the Project Schedule will also be used by the Funding Agency in assessing responsibility for liquidated damages if the Small GESA Contractor causes an unjustified delay.

iii. The Milestones shall be updated and adjusted within ten (10) calendar days of the Funding Agency granting the Small GESA Contractor an Extension of Time. If a

Recovery Plan that was accepted by the Funding Agency requires modification of any future Milestone, the Project Schedule and Milestones must be revised accordingly. The Milestones shall be updated and adjusted each time the Project Schedule is revised.

iv. Adjusting the Project Schedule through the use of a Recovery Plan does not constitute approval by the Funding Agency of any request for an Extension of Time and does not replace the process of seeking Extensions of Time in accordance with the Extension of Time paragraph in this Article of these General Conditions and the Administrative Procedures, which provisions will be strictly enforced. If a Small GESA Contractor submits a timely filed request for an Extension of Time the Small GESA Contractor a proposed Milestone schedule with and without the asserted delay.

7.17. Delays and Extensions of Time. If the Small GESA Contractor is delayed by:

a. Any action or inaction on the part of the Funding Agency on a critical activity on the current Progress Schedule; or

b. Labor disputes; or

c. Fire; or

d. Unavoidable casualties; or

e. Delay due to suspension of work, as provided in these General Conditions; or

f. Any cause that the Funding Agency determines may justify the delay;

then the Contract Duration may be extended by the approval of the Funding Agency, through an Extension of Time, for such reasonable time as the Funding Agency may determine. The Funding Agency will respond to a Small GESA Contractor's timely request for Extension of Time within thirty (30) calendar days of the Funding Agency's receipt of such request.

7.18. Unfavorable Weather. Unfavorable weather, including but not limited to rain, snow, wind and cold or freezing weather, is not a cause for an Extension of Time. The Small GESA Contractor shall anticipate the effects of weather in developing its construction plan, use such methods of protection as may be necessary to continue the Work throughout periods of unfavorable weather and/or make up time lost due to weather conditions. No Extension of Time due to unfavorable weather conditions shall be granted except as may pertain to a force majeure weather event.

7.19. Extensions of Time Not an Admission of Liability for Delay. The approval of an Extension of Time only constitutes a release by the Funding Agency of the Funding Agency's ability to assess liquidated damages against the Small GESA Contractor for the number of days granted by the Extension of Time. the Funding Agency's approval of an Extension of Time shall not be construed or interpreted by any Small GESA Contractor as an admission that the Funding Agency is liable for delay damages. The Small GESA Contractor agrees that the Funding Agency's grant of an Extension of Time will not be used as an admission by the Funding Agency of any liability for delay in any subsequent dispute regarding delays. This Paragraph does not preclude either the Small GESA Contractor's rights or the Funding Agency's rights to pursue a claim for damages under other provisions of the Contract Documents.

ARTICLE 8

SUBMITTALS

8.1 **Submittals.** The Small GESA Contractor shall submit all necessary submittals to Small GESA Contractor's Retained Professional for review and approval. The Small GESA Contractor's Retained Professional shall then distribute (in accordance with the Administrative Procedures) all approved submittals to the Funding Agency. Submittals shall be in accordance with the Contract Documents and include, but not be limited to, such items as:

- **a.** Small GESA Contractor's, Subcontractor's, manufacturer's or fabricator's shop drawings.
- **b.** Descriptive literature including, but not limited to:
  - **i.** Catalog cuts
  - **ii.** Diagrams
  - **iii.** Operation charts or curves
  - **iv.** Test reports
  - **v.** Samples
  - **vi.** Operations and maintenance manual, including parts lists
  - **vii.** Certifications
  - **viii.** Warranties
- **c.** Coordination Drawings as required.

The Small GESA Contractor's Retained Professional's approval of submittals does not relieve the Small GESA Contractor of the responsibility for any deviation from the requirements of the Contract Documents, unless:

i. The Small GESA Contractor has informed the Funding Agency of such deviation in writing in its letter of submission at the time of submission and the Funding Agency accepted such deviation; and

ii. The Small GESA Contractor has noted the deviation on the shop drawings; and

iii. The Small GESA Contractor's Retained Professional has given written approval of the specific deviation. The Retained Professional's approval also does not relieve the Small GESA Contractor from responsibility for errors or omissions in the submittals.

If each of these three steps is not performed, the Small GESA Contractor will not be relieved of the responsibility for executing the Work in complete conformity with the Contract Documents, even though the submittals have been approved.

Failure to mention a deviation shall be construed as a non-conformance with the Contract Documents. The Small GESA Contractor shall be responsible for all costs associated with bringing the Work back into conformance with the Contract Documents,

including costs incurred by the Small GESA Contractor, the Small GESA Contractor's Retained Professional and the Funding Agency as a result of such non-conformance.

8.2 **Approval by Retained Professional**. By approving and submitting submittals, the Small GESA Contractor represents that such submittals are sufficient for review purposes and that it has determined and verified all field measurements, field construction criteria, materials, catalog numbers and similar data and that it has checked and coordinated each submittal with the requirements of the Work and of the Contract Documents. Where field measurements and field construction criteria are not verifiable at the date of the submittal, the Small GESA Contractor shall ensure that dimensions will be held.

a. The Small GESA Contractor's Retained Professional shall review and approve the Small GESA Contractor's submittals promptly and in accordance with its Small GESA Contractor/Retained contract. Submissions requiring the Funding Agency acceptance shall be made in an orderly fashion. Simultaneous submission of large quantities of documents requiring review and acceptance by the Funding Agency may lead to significant delays in receiving required acceptance and such delays shall not be a cause for any Extension of Time. The Small GESA Contractor's Retained Professional's review and approval is for conformance with the design concept of the project and with the information given in the Contract Documents. The Funding Agency review and acceptance is for conformance with the Contract Documents. The Small GESA Contractor's Retained Professional's approval and the Funding Agency acceptance of a separate item does not indicate approval of an assembly in which the item functions. Approval and/or acceptance of a separate item does not indicate approval and/or acceptance of an assembly in which the item functions. The Small GESA Contractor shall be responsible for all costs associated with delays of the Project incurred as a result of any disapprovals and/or non-acceptance of its submittals for incompleteness.

b. The Small GESA Contractor shall make any corrections required and shall resubmit the required number of corrected copies of submittals until approved. The resubmission shall be acted on promptly by the Small GESA Contractor's Retained Professional in accordance with the Small GESA Contractor/Retained Professional agreement. When resubmitting submittals, the Small GESA Contractor shall direct specific attention to any revisions made, other than the corrections requested by the Small GESA Contractor's Retained Professional on previous submissions, by noting such revisions on the resubmitted submittals. The Funding Agency review time of resubmissions for required acceptance by the Funding Agency shall not be reduced by failure of the Small GESA Contractor and/or the Retained Professional to adhere to the accepted Submittal Schedule or by the failure of the Small GESA Contractor to make an acceptable initial submission.

c. When resubmitting submittals, the Small GESA Contractor shall direct specific attention to any revisions made, other than the corrections requested by Small GESA Contractor's Retained Professional on previous submissions, by noting such revisions on the resubmissions.

d. The Retained Professional's approval and/or the Funding Agency acceptance of shop drawings or samples does not relieve the Small GESA Contractor of responsibility for any deviation from the requirements of the Contract Documents, unless the Small GESA Contractor has informed the Funding Agency in writing of such deviation at the time of submission, has noted the deviation on the submittals, and Small GESA Contractor's Retained Professional has given written approval of the specific deviation. The Professional's approval also does not relieve the Small GESA Contractor from responsibility for errors or omissions in the submittals. Failure to mention a variation shall be construed as a non-conformance with the Contract Documents. The Small GESA Contractor shall be responsible for all costs associated with bringing the Work back into conformance with the Contract Documents, including costs incurred by any other Prime Small GESA Contractor, Small GESA Contractor's Retained Professional and the Funding Agency as a result of such non-conformance.

e. No portion of the Work requiring a submittal shall be commenced until the submittal has been approved by the Retained Professional. Any Work commenced by the Small GESA Contractor prior to final approval of the submittal is performed by the Small GESA Contractor at its own risk.

8.3 **Standards of Quality.** Where trade names, catalog number and manufacturers of material or equipment are specified, whether in the RFP, bridging, prototype or other contract document, they are mentioned for the purpose of establishing a standard of quality, performance, and appearance, and for establishing a standard of competitive bidding. If the Small GESA Contractor wishes to utilize material or equipment that is of the same type, but manufactured by others than those named in the specifications, the Small GESA Contractor shall certify that the material or the equipment is equal in quality, performance and appearance to that mentioned in the specifications. **The list of proprietary items (if any) may not be considered for "or equals"**. The Small GESA Contractor shall submit to Small GESA Contractor's Retained Professional and the Funding Agency, subsequent to the Award of Contract, a request to install such material or equipment. The Small GESA Contractor's request shall include a comprehensive description of the material or equipment proposed to be utilized as an equal, including engineering, construction, and dimension and performance data. The Small GESA Contractor's Retained Professional will render a written determination to the Small GESA Contractor and to the Funding Agency. The Funding Agency must be allowed at least fourteen (14) calendar days to review and retains the right to reject the determination. If the Small GESA Contractor disagrees with the Funding Agency's decision, the Small GESA Contractor may file a dispute, but must proceed with the Work as decided by the Funding Agency.

8.4 **Substitution of Materials. The list of proprietary items (if any) may not be considered for substitutions**. If the Small GESA Contractor desires to furnish materials or equipment other than that which is specified, the Small GESA Contractor shall submit to Small GESA Contractor's Retained Professional and to the Funding Agency a comprehensive description of the material or equipment proposed for substitution, including engineering, construction, dimension, performance and appearance data, along with a statement of the cost involved. The Retained Professional shall render a written determination to the Small GESA Contractor. The Funding Agency must be allowed to at least fourteen (14) calendar days for review and retains the right to reject the determination. If the substituted material or equipment is

accepted, the Small GESA Contractor is responsible for any and all costs incurred and shall work to eliminate any additional time needed as a result of the substitution. If the cost of the substituted item is less than the specified item, the Funding Agency is entitled to a credit for the difference between the cost of the substituted item and the item specified.

ARTICLE 9

PROTECTION OF PROPERTY, INSURANCE AND INDEMNIFICATION

9.1 **Safety Overview.** The Small GESA Contractor and its subcontractors of all tiers will be responsible for the safety and security of its employees under their control and as to its area of Work. The Small GESA Contractor shall recognize that it is important to business to prevent the occurrence of incidents that lead to occupational injuries or illnesses. Safety and Health requirements on this Project shall be assembled and administered by the Small GESA Contractor in accordance with the following:

a. The accident prevention policy shall be based on a sincere desire to eliminate personal injuries, occupational illnesses, and equipment and property damage and to protect the general public exposed to or associated with the Work.

b. The importance of safety on the Project shall be recognized and accident prevention shall be an integral part of all operations.

c. Small GESA Contractor and subcontractors shall conduct Work in a safe and practical manner in conformance with Occupational Safety and Health Act of 1970 and as amended, and the latest edition of the Manual of Accident Prevention, Associated General Contractors of America.

d. In addition to the Small GESA Contractor's Safety Program, the Small GESA Contractor and subcontractors shall follow all applicable Federal, State and local laws/regulations pertaining to safety, health, pollution control, water supply, fire protection, sanitation facilities, waste disposal and other related items.

e. OSHA and Emergency Phone Numbers Poster shall be posted in a conspicuous location.

f. Good housekeeping shall be observed at all times. Waste, debris, and garbage shall be removed daily or placed in appropriate waste containers outside of the work place and all materials, tools and equipment shall be stored in a safe and orderly fashion.

g. The Small GESA Contractor shall educate its employees and subcontractors as to the site specific Health and Safety Plan and to enforce adherence to safe work procedures outlined in these General Conditions.

9.2 **Compliance with Safety Laws.** The Small GESA Contractor and its Subcontractor(s) of any tier shall follow OSHA requirements regarding the recognition and avoidance of unsafe conditions and the regulations applicable to the work environment. The Small GESA Contractor shall comply at all times with all applicable Federal, Commonwealth, and local laws, ordinances, rules, regulations and orders of any public authority having

jurisdiction for the safety of persons or property and to protect them from damage, injury or loss. The Small GESA Contractor shall erect and maintain, as required by existing conditions and progress of the Work, all reasonable safeguards for safety and protection, including posting danger signs and other warnings against hazards, promulgating safety regulations and notifying owners and users of adjacent utilities until the acceptance of all on-site physical work, change order work, and/or demobilization. All areas of the Project shall be hardhat areas. All persons within the Contract Limits are required to be protected by protective helmets in compliance with Occupational Safety & Health Administration (OSHA) requirements.

9.3 **Accident Reports.** In the case of an injury to an employee of the Small GESA Contractor or its Subcontractor(s) involving lost time beyond the date of the injury, the Small GESA Contractor will furnish to the Funding Agency a copy of the first Report of Injury, the injury report filed with the insurance company and a Foreman's Accident Report within 24 hours after the occurrence. Any incidents involving the police or other law enforcement agency will also be included in this documentation. All recordable occupational injuries and illnesses, other than First Aid cases, as required by the regulations issued under the Occupational Safety and Health Act of 1980 (as amended) shall be recorded on the appropriate OSHA form each month and a copy forwarded to the Funding Agency.

9.4 **First Aid Treatment.** The Small GESA Contractor shall keep on-site at suitable locations first aid kits supplied according to current regulations and shall have a certified person(s) trained in first aid and CPR to cover normal project working hours as well as any on-site operations occurring outside of normal project working hours. In case of an injury to an employee of the Small GESA Contractor or its Subcontractor(s) requiring First Aid Treatment, the Small GESA Contractor will furnish to the Funding Agency a copy of the First Aid Register, in accordance with the Small GESA Contractor's Procedures Manual, detailing the type of injury and the treatment provided.

9.5 **Emergency Notification.** The Small GESA Contractor shall establish a procedure to provide emergency communications to all individuals on the site. This procedure will not be used to handle routine calls to individuals.

9.6 **Failure To Comply With Safety Regulations.** Failure to comply with the Contract safety requirements will be considered as non-compliance with the Contract and may result in remedial action provided by the Contract. If the Funding Agency notifies the Small GESA Contractor of any non-compliance with the provisions of this program, the Small GESA Contractor shall make all reasonable efforts to correct the unsafe conditions or acts. Satisfactory corrective action shall be taken within the time specified by the Funding Agency. If the Small GESA Contractor or Subcontractor refuses to correct unsafe or unhealthy conditions or acts, the Funding Agency may take one or more of the following steps:

a. Cease the operation or a portion thereof until the condition is brought into compliance with the Site Safety Procedures;

b. Stop payment for the Work being performed;

All costs, including but not limited to those above, associated with ensuring a safe and health conscious work environment shall be borne by the Small GESA Contractor and costs will be backcharged to the Small GESA Contractor. The Small GESA Contractor

shall be responsible for payment of all fines and/or claims for damages levied for deficiencies relating to conduct of Small GESA Contractor's Work.

9.7 **Explosives.** Unless permitted in the specifications, the use of explosives and other hazardous materials or equipment is not permitted for the execution of the Work. If explosives are permitted, the Small GESA Contractor shall observe the utmost care, performing such Work with experienced personnel and in accordance with all Federal, Commonwealth, local, Departmental, and institutional regulations, so as not to endanger life or property. Rock encountered within five (5) feet of pipelines or buildings shall be removed without blasting. All explosives shall be stored in a secure and safe manner, in strict conformity with all Federal, Commonwealth and municipal regulations and all such storage shall be clearly marked "Dangerous-Explosives" and shall be in the care of competent watchmen at all times. The Small GESA Contractor shall provide insurance in accordance with the special insurance provision in these General Conditions relating to "Blasting". The Small GESA Contractor shall be responsible for all damages caused by the use of explosives, hazardous materials and/or equipment, and blasting and shall notify the Funding Agency of any claims of damage associated with this Paragraph at the time of claim.

9.8 **Remediation of Damages.** The Small GESA Contractor shall remedy all damages or loss to any property caused in whole or in part by the Small GESA Contractor, any Subcontractor, any sub-subcontractor, or anyone directly or indirectly employed by any of them. If damage or loss is attributable to faulty drawings or specifications or to the acts or omissions of the Funding Agency and the damage or loss is not attributable to any fault or negligence of the Small GESA Contractor, then the Small GESA Contractor shall not provide remediation.

9.9 **Loads.** The Small GESA Contractor shall not load or permit any part of the Work to be loaded so as to endanger the safety of persons or property.

9.10 **Small GESA Contractor's Liability Insurance.** The Small GESA Contractor, during the progress of the Work and until the acceptance of all on-site physical work, change order work, and/or demobilization, shall purchase and maintain such insurance as will protect it from claims set forth below which may directly or indirectly arise out of or result from operations under the Small GESA Contract or by a subcontractor of the Small GESA Contractor, or by anyone directly or indirectly employed by or representative of any of them, or by anyone for whose acts any of them may be liable:

a. Claims under workers' compensation disability benefit and other similar employee benefit laws;

b. Claims for damages due to bodily injury, occupational sickness, sickness or disease, or death of the Small GESA Contractor's employees, and claims insured by usual personal injury liability coverage;

c. Claims for damages covered by usual personal liability coverage which are sustained (1) by a person as a result of an offense directly or indirectly related to employment of such person by the Small GESA Contractor or (2) by another person;

d. Claims for damages because of injury to or destruction of tangible property including loss of use resulting therefrom;

e. Claims for damages because of bodily injury, death of a person or property damage arising out of ownership, maintenance or use of a motor vehicle; and

f. Claims for bodily injury or property damage arising out of completed operations. Liability insurance shall include all major divisions of coverage and be on a comprehensive basis including:

   i. Premises Operations (Including X-C-U coverage as applicable).

   ii. Independent Contractor's Protective.

   iii. Products and Completed Operations.

   iv. Personal Injury Liability with Employment Exclusion deleted.

   v. Contractual.

   vi. Owned, non-owned and hired motor vehicles.

   vii. Broad Form Property Damage including Completed Operations.

   viii. Umbrella Excess Liability.

   ix. Claims involving contractual liability applicable to the Small GESA Contractor's obligations under the Contract Documents, including without limitation Article 10.23 herein.

g. If the General Liability coverages are provided by a Commercial General Liability Policy on a claims-made basis, the policy date or Retroactive Date shall predate the Contract; the termination date of the policy or applicable extended reporting period shall be no earlier than the termination date of coverages required to be maintained after Final Inspection.

h. The insurance required by this Article shall be written for not less than any limits of liability specified in this Article, or required by Law. Coverage, whether written on an occurrence or claims made basis, shall be maintained without interruption from date of commencement of the Work until date of final Closeout Inspection and/or termination of any coverage required to be maintained after Final Inspection, whichever event occurs later.

9.11 COMPREHENSIVE GENERAL LIABILITY AND AUTOMOBILE LIABILITY INSURANCES. The Contractor's comprehensive general liability insurance and automobile liability insurance shall be in the amounts set forth in the RFP.

a. For Subcontractors, the Contractor shall either

   i. Require each of its Subcontractors to procure and to maintain Subcontractors' comprehensive general liability, automobile liability, and property damage liability insurance of the type and in the same amounts as specified in this subsection for the life of its subcontract and/or until the acceptance of all of its on-site physical work, change order work, and/or demobilization;

OR

ii. Insure the activity of its Subcontractors in its own policy.

b. If required by a Special Condition, the GESA Contractor's and its Subcontractors' liability insurance shall include additional riders providing for adequate protection against the indicated special hazards (e.g., blasting, flooding, underpinnings, etc.).

c. The GESA Contractor must submit to the Department within ten (10) calendar days from the Initial Job Conference, and prior to the beginning of on-site work, evidence that all subcontractors and sub-subcontractors are covered by insurance.

9.12 **INSURANCE LIMITS**. The insurance required by this Article shall be written for not less than any limits of liability specified in this Article, the RFP, or required by Law.

9.13 **Certificates of Insurance.** The Small GESA Contractor must submit to the Funding Agency, with its signed Small GESA Contract, Certificates of Insurance acceptable to the Funding Agency. These certificates shall contain a provision that coverages afforded under the policies shall not be canceled or changed until at least ninety (90) calendar days written notice has been given to the Funding Agency. Renewal certificates must be provided to the Funding Agency prior to the expiration of the prior policy as stated on the certificate. If any of the foregoing insurance coverages are required to remain in force after Final Inspection, an additional certificate evidencing continuation of such coverage shall be submitted at Final Inspection. All subcontractors and sub-subcontractors insurance evidence shall be provided at least five (5) calendar days before those entities begin work on-site.

9.14 **Small GESA Contractor's Property Insurance.** The Small GESA Contractor shall, until all physical on-site work is complete, including change order work, punch list work, demobilization or seasonal work, maintain insurance on all insurable work included in the Contract against loss or damage by fire and lightning and those perils covered by the extended coverage endorsement. Insurable work includes work both inside and outside of any building being constructed. The insurance (which must include Builder's Risk Insurance or an installation floater that covers all risks) must be in the names of the DGS, Funding Agency, and the Small GESA Contractor in full insurable value thereof as will fully protect the interests of DGS and the Commonwealth, the Contractor, Subcontractors, and Sub-subcontractors.

9.15 **Small GESA Contractor's Insurance Requirements.** Refer to requirements established in the Request for Proposal.

9.16 **Specialized Insurance.** The Small GESA Contractor shall be required to obtain and maintain throughout the course of the Project any insurance coverage beyond that which is listed in the Request for Proposal and contract documents that may be necessary due to the scope of Work encompassed within this Project.

9.17 **Hazardous Material Liability Insurance.** When applicable, the Small GESA Contractor must provide a Certificate of Insurance demonstrating to the Funding Agency's satisfaction the existence of the following required insurance:

$1,000,000 occurrence/$2,000,000 aggregate, including products and completed operations. Such insurance shall include coverage for the Small GESA Contractor's operations including, but not limited to, removal, replacement enclosure, encapsulation and/or disposal of asbestos, or any other hazardous material, along with any related pollution events, including coverage for third-party liability claims for bodily injury, property damage and clean-up costs. If a retroactive date is used, it shall pre-date the inception of the Small GESA Contract. If motor vehicles are used for transporting hazardous materials, the Small GESA Contractor or its subcontractor shall provide pollution liability broadened coverage (ISO endorsement CA 9948) as well as proof of MCS 90. Coverage shall fulfill all requirements set forth herein and shall extend for a period of three (3) years following acceptance by the Commonwealth of the Certificate of Completion.

9.18 **Risk to Construction Work.** The risk of damage to the construction work is that of the Small GESA Contractor and surety until Final Inspection. No claims for such loss or damage will be recognized by the Funding Agency, nor will such loss or damage excuse the complete and satisfactory performance of the Contract by the Small GESA Contractor.

9.19 **Unacceptable Surety or Insurance Company.** If the surety on the bonds or the insurance company providing the required coverage becomes unsatisfactory to the Funding Agency, the Small GESA Contractor must promptly furnish such additional security or insurance coverage as may be required to protect the interest of the Funding Agency. The Small GESA Contractor shall, from time to time, furnish the Funding Agency, when requested, satisfactory proof of coverage of each type of Bond and/or insurance required. Failure to comply with this provision shall result in the cessation of the Work, and shall be sufficient grounds to withhold any further payments due the Small GESA Contractor and/or to declare the Small GESA Contractor in default. The Funding Agency will not consider any claim for an Extension of Time, costs, or damages because of time lost due to such instance brought by the noncompliant Small GESA Contractor. The Small GESA Contractor shall be responsible for damages incurred the Funding Agency for non-compliance.

9.20 **Indemnification.** The Small GESA Contractor shall indemnify and hold harmless the Commonwealth, the Funding Agency, and their agents and employees from and against all claims, damages, losses and expenses, including attorneys' fees arising out of or resulting from the performance of the Work, provided that any such claim, damage, loss or expense is:

a. Attributable to bodily injury, sickness, disease or death or to injury to or destruction of tangible property, including the loss of use resulting therefrom; and

b. Caused in whole or in part by any negligent act or omission of the Small GESA Contractor or any Subcontractor, regardless of whether or not it is caused in part by a party indemnified hereunder.

9.21 **Indemnification Not Limited by Employee Benefits Acts.** In any and all claims against the Commonwealth, the Funding Agency, or the Retained Professional or any of their agents or employees, by any employee of the Small GESA Contractor or any Subcontractor, the indemnification obligations under this Article shall not be limited on the amount or type of damages, compensation, or benefits payable by or for the Small

GESA Contractor or any Subcontractor under Worker's Compensation Acts, Disability Benefit Acts, or other employee benefit Acts.

9.22 **Workplace Drug and Alcohol Policy.** The Funding Agency is committed to providing a safe workplace for the workers assigned to the Project, promoting high standards of employee health and fostering productivity. Consistent with the intent and spirit of this commitment, the Funding Agency requires the Small GESA Contractor to establish a drug and alcohol policy specification for the Project with the goal of maintaining a work environment that is free from the effects of the use of illegal drugs and alcohol.

ARTICLE 10

CHANGES IN THE WORK

10.1 **Changes.** The Funding Agency, without invalidating the Contract, may direct changes in the Work within the general scope of the ECMs set forth in the Small GESA Contract, consisting of additions, deletions or other revisions. All such changes in the Work will be authorized by Change Order or Field Order.

a. **The Small GESA Contractor agrees that payment under any method noted within this Article will be the exclusive compensation for such addition, deletion, or other revision to the original Contract, including any and all costs associated with acceleration, stacking and re-sequencing of forces required by the change in order to maintain the Project Schedule.**

b. If it is not possible to complete the Work in accordance with the Project Schedule by acceleration, stacking or re-sequencing, the Small GESA Contractor may request an Extension of Time. Adequate information and proper form submission must be provided to validate this request. The Funding Agency reserves the right to deny requests not accompanied by adequate information and proper form submissions.

10.2 **Cost of Change Order.** The debit or credit cost to the Funding Agency resulting from a change in the Work shall be determined in accordance with the Change Order Administrative Procedure as determined by the Funding Agency.

10.3 **Disagreement as to Cost or Credit.** If the Funding Agency and the Small GESA Contractor cannot agree as to the cost or credit to the Funding Agency resulting from a change in the Work, the Funding Agency shall determine the cost or credit. The Small GESA Contractor **must** proceed with the Change Order work under this Article if directed to do so by the Funding Agency. The Small GESA Contractor may submit the disputed cost to the Funding Agency when the Work is completed for a re-evaluation by the Funding Agency in accordance with the Dispute Resolution Article of these General Conditions. The Funding Agency may, in the Funding Agency's sole discretion, monitor any or all disputed cost work on a time and material force account basis. If the Funding Agency accepts the change as a force account Change Order, the Small GESA Contractor would be required to show proof of incurred cost as stipulated under the provisions of Change Order Administrative Procedure.

10.4 **Unclassified Excavation.**

a. If required for this Project, excavation will be unclassified and will include all types of earth and soil, any pebbles, boulders, and bedrock, municipal trash, rubbish and garbage, and all types of debris of the construction industry such as wood, stone, concrete, plaster, brick, mortar, steel and iron shapes, pipe, wire asphaltic materials, paper and glass. Unclassified excavation does not include unforeseen concrete foundations, walls, or slabs. Unclassified excavation also does not include unforeseen buried hazardous materials.

b. All materials encountered which are identified as described in the previous paragraph as unclassified shall be removed to the required widths and depths to create a finished product as shown and/or noted on the drawings and as written in the specifications. No additional compensation or time shall be given to the Small GESA Contractor for this unclassified excavation.

c. Any unclassified items described in paragraphs A and B above that are discovered during any excavation are not concealed conditions or unknown physical conditions below the surface for purposes of the Concealed Conditions paragraph of these General Conditions.

10.5 Concealed Conditions.

a. The Funding Agency recognizes two types of concealed conditions which might be encountered during the performance of the Work, namely:

   i. Concealed conditions which are unascertainable from the plans, Contract Documents, visits to the site, or reasonable investigation, and which are at variance with the conditions indicated by the Contract Documents; or

   ii. Unknown physical conditions below the surface of the ground of an unusual nature, differing materially from those ordinarily encountered and generally recognized as inherent in work of the character provided for in this Contract.

b. The Small GESA Contractor shall immediately, and before the conditions are disturbed, give a written notice to the Funding Agency describing the concealed conditions. The Funding Agency shall investigate the concealed conditions and determine if there is a concealed condition.

c. If the Funding Agency decides that either of the two concealed conditions described above has occurred during construction, then the Contract Sum shall be equitably adjusted by Change Order. No adjustment shall be made to the Contract Sum under this paragraph, however, for concealed conditions encountered during cutting and patching of Work.

d. In the event that concealed or unknown conditions described above preclude either the Small GESA Contractor or the Funding Agency from establishing either a methodology or a quantity of work to be priced into a Change Order before commencement and performance of Work, the Funding Agency reserves the right to do any of the following:

   i. If only the quantity of Work is unknown, the Funding Agency may issue a Change Order to perform work in a quantity established by the Funding Agency. The Funding Agency will monitor the actual quantities and, upon

completion of the Work, issue a second Change Order to adjust the original quantity.

ii. If the Funding Agency deems that either the methodology and/or scope of the Change Order are indeterminable, the Funding Agency may issue an exploratory Change Order to determine the appropriate methodology and scope before issuing a follow-up Change Order to complete the Work. If the Funding Agency determines, after review of the results of the exploratory Change Order, that this Change Order was not successful in establishing the methodology or scope of work, the Funding Agency may opt for performing and monitoring the entire Change Order Work on a time and material force account basis. If the Funding Agency decides to proceed in this manner, the Small GESA Contractor will be required to show proof of incurred cost as stipulated under the provisions of Change Order Administrative Procedure.

10.6 **No Claims for Additional Cost or Time.** No claims for increased costs, charges, expenses, or damages of any kind, except as provided in the General Conditions, shall be made by the Small GESA Contractor against the Funding Agency for any delays or hindrances from any cause whatsoever, including, but not limited to, strikes, walkouts or work stoppages during the progress of any portion of the Work. The Funding Agency may, however, address such non-compensable delays by extending the time for completion of the Work, as provided in the Contract, which extensions shall constitute the exclusive remedy between the parties.

10.7 **Minor Changes in the Work.** The Funding Agency may direct minor changes in the Work (such as minor relocations or field revisions) that the Funding Agency and the Small GESA Contractor mutually agree do not involve an adjustment in the Contract Sum or an extension of the Contract time and which are not inconsistent with the intent of the Contract Documents. Such changes may only be enacted by written Field Order, as provided, or by other written order. Such changes are binding on the Funding Agency and the Small GESA Contractor. The Small GESA Contractor shall carry out such Field Orders promptly.

10.8 **Directive to Commence Change Order Work.** The Funding Agency may direct the Small GESA Contractor to commence Change Order Work prior to a fully executed Change Order. Such direction will not be given until the Funding Agency generates the scope and confirms that funding is available to complete the Change Order Work.

ARTICLE 11

NON-CONFORMING WORK AND CORRECTIONS

11.1 **Work Covered Contrary to Request.** If any Work is covered contrary to the reasonable request of the Funding Agency or the Professional, the Work must, if required by the Funding Agency or the Professional, be uncovered for observation and replaced, at the Small GESA Contractor's expense with no Extension of Time.

11.2 **Uncovering of Work.** If any Work has been covered which the Funding Agency has not specifically requested to observe prior to being covered, the Funding Agency may

request to see such Work and the Work shall be promptly uncovered by the Small GESA Contractor.

a. If such Work is found to be in accordance with the Contract Documents, the cost of uncovering and replacement shall be charged to the Funding Agency by appropriate Change Order.

b. If such Work is found to be not in accordance with the Contract Documents, the Small GESA Contractor shall pay costs to make the Work conform and the cost of uncovering and replacement.

11.3 **Correction of Work Rejected by The Funding Agency.** The Small GESA Contractor shall promptly correct all Work rejected by the Funding Agency, or the Small GESA Contractor's Retained Professional as defective or as failing to conform to the Contract Documents. The correction must be implemented regardless of when such Work is observed and whether or not the Work was fabricated, installed or completed or whether such Work had been paid for by the Funding Agency. The Small GESA Contractor shall bear all costs of correcting such rejected Work, including the cost of the Small GESA Contractor's Retained Professional's additional services and any additional cost incurred by the Funding Agency and/or any other agency.

11.4 **Correction of Work after Acceptance.** If, after the date of Final Inspection and acceptance of all Work performed under the Contract and until the expiration of warranty on the Work, any of the Work is found to be defective or nonconforming, the Small GESA Contractor shall correct such Work promptly after receipt of a written notice from the Funding Agency, unless the Funding Agency has previously given the Small GESA Contractor a written acceptance of this specific condition. The Funding Agency should give such notice of rejection promptly after discovery of the condition. Acceptance or payment of an Application for Payment by the Funding Agency shall not constitute acceptance.

11.5 **Correction at No Cost to The Funding Agency.** All defective or nonconforming Work shall be promptly removed from the site, and the Work shall be corrected to comply with the Contract Documents without cost to the Funding Agency.

11.6 **Investigation by The Funding Agency.** The Funding Agency reserves the right, upon investigation of installation of defective and/or nonconforming Work, to note this situation in the Contractor Responsibility Program and may consider suspension of the Small GESA Contractor in accordance with Section 531 of the Commonwealth Procurement Code. The Funding Agency may also, in its sole discretion, find the Small GESA Contractor in breach of its Contract and/or declare the Small GESA Contractor in default of its Contract in accordance with the Termination Article of these General Conditions.

11.7 **Acceptance of Nonconforming Work.** If The Funding Agency knowingly elects to accept nonconforming work, it may do so instead of requiring its removal and correction. If nonconforming work is accepted, a credit Change Order shall be issued to reflect an appropriate reduction in the Contract Sum, or, if the amount is determined after final payment, it shall be paid by the Small GESA Contractor and/or the Small GESA Contractor's surety.

11.8 **Obligations of Small GESA Contractor Not Limited by this Article.** The obligations of the Small GESA Contractor under this Article are in addition to, and not in limitation of, any obligations imposed upon the Small GESA Contractor by the Contract Documents or otherwise prescribed by Law.

ARTICLE 12

PAYMENTS AND COMPLETION

12.1 **Contract Breakdown.** The language in this Article must be construed in conjunction with the detailed language of the applicable Administrative Procedure.

12.2 **Application for Progress Payments.** During the progress of the Work, the Small GESA Contractor shall submit to the Funding Agency itemized Applications for Progress Payment on the form specified by the Funding Agency in the Administrative Procedures. The Funding Agency will review the application for validity.

12.3 **Stored Materials**: If, upon the determination of the Funding Agency as to reasonableness, payments are to be released to the Small GESA Contractor on account of materials or equipment which are not incorporated in the Work, but are delivered and suitably stored at the site, or at some other location agreed to in writing, such release of payment shall be conditioned upon submission by the Small GESA Contractor of Bills of Sale forms provided by the Funding Agency to establish the Funding Agency's title to such materials or equipment as well as the compliance with the requirements in the Administrative Procedures. The Small GESA Contractor shall remain responsible for all losses of materials and equipment that remain under its custody and control, regardless of the exclusions in insurance policies. Warranties do not begin until the date of Final Inspection.

12.4 **Small GESA Contractor Warrants Title to all Work Passes Free of Liens.** The Small GESA Contractor warrants and guarantees that title to all work, materials and equipment covered by an Application for Progress Payment, whether incorporated in the Project or not, will pass to the Funding Agency upon Final Payment by the Funding Agency. The title shall be free and clear of all liens, claims, security interests or encumbrances (hereinafter referred to in this Paragraph as "liens"). The Small GESA Contractor further guarantees that no work, materials or equipment covered by an Application for Progress Payment was acquired by the Small GESA Contractor, its employees, its Suppliers or its Subcontractors subject to an agreement under which an interest therein or an encumbrance thereon is retained by the seller or otherwise imposed by the Small GESA Contractor, its employees, its Suppliers or its Subcontractors.

12.5 **Neither Payment Nor Occupancy Constitutes Acceptance of Work not in Conformance with Contract Documents.** Under no circumstances will any of the following occurrences constitute an acceptance of any Work not in accordance with the Contract Documents:

a. An acceptance of an Application for Progress Payment; or

b. Full or partial payment to the Small GESA Contractor of any progress payment; or

c. Partial or entire use or occupancy of the Project by the Funding Agency.

12.6 **Approval for Release of Payment Withheld.** The Funding Agency may decline to release payment on an Application for Progress Payment in whole or in part if the Work has not progressed to the point indicated, or the quality and quantity of the Work is not in accordance with the Contract Documents. The Funding Agency may also decline to release payment on any Applications for Payment because of subsequently discovered evidence or subsequent inspections which may nullify the whole or any part of any Application for Payment previously issued to such extent as may be necessary in their opinion to protect the Funding Agency from loss because of deficiency items, including but not limited to:

a. Defective work not remedied; or

b. Reasonable doubt that the Work can be completed for the unpaid balance of the Contract Sum; or

c. Reasonable indication that the Work will not be completed within the contract time; or

d. Unsatisfactory prosecution of the Work by the Small GESA Contractor; or

e. Failure of the Small GESA Contractor to maintain insurance; or

f. Failure of the Small GESA Contractor to properly submit the required submittals and forms, as required in the Administrative Procedures.

If the Funding Agency withholds approval of the release of payment from the Small GESA Contractor for any of the aforementioned reasons, the Funding Agency will provide written notification to the Small GESA Contractor of the reason for withholding approval of payment within fifteen (15) days of the Funding Agency's receipt of the Application for Release of Progress Payment.

The Small GESA Contractor may withhold payment from a Subcontractor or Supplier for a deficiency item. If payment is withheld from the Subcontractor or Supplier for such item, the Small GESA Contractor must notify the Subcontractor or Supplier and the Funding Agency of the reason for the withholding within 15 days of the date after the Small GESA Contractor receives the notice of deficiency item from the Funding Agency.

12.7 **Payment Approved When Grounds are Resolved.** When issues for withholding approval of the release of payment are resolved to the Funding Agency's satisfaction, the Funding Agency will approval of the release of payment to the Small GESA Contractor for the amounts withheld. The grounds for withholding payment shall be considered resolved upon the Funding Agency's issuance of a letter indicating that the issue has been resolved.

12.8 **Retainage.** The Funding Agency may retain a portion of the amount due the Small GESA Contractor to ensure the proper performance of the Contract. In computing the amount payable in accordance with this Article on any current Application for Release of Payment:

a. The Funding Agency may deduct and retain up to three percent (3%) of the then total Applications for Release of Payment. The sum withheld by the Funding Agency shall not exceed three percent of the Contract Sum. All money retained

by the Funding Agency may be withheld until the Final Payment is approved for release.

12.9 <u>If The Funding Agency Does Not Approve Release of Payment</u>. If the Funding Agency fails to approve release of payment to the Small GESA Contractor within forty-five (45) days after receipt of an acceptable Application for Progress Payment, the Small GESA Contractor may file a claim for interest. No interest penalty payment shall be paid, however, if payment is made on or before the fifteenth (15th) calendar day after the payment due date. The Small GESA Contractor is not entitled to stop work in any event, unless the Funding Agency exercises its right to suspend the work, as provided in these General Conditions. According to 62 Pa. C.S. §3938, as amended, this failure to pay provision shall not apply if:

a. The General Assembly failed to enact a budget for the fiscal year of payment; or

b. The Federal or State Government failed to pay funds due and payable to the local government unit; or

c. The General Assembly failed to enact an operating budget for the fiscal year of payment or a capital budget for the capital project; or

d. The Federal, State, or local government failed to pay funds designated or to be designated for the specific project.

12.10 <u>If Work Cannot be Completed Through No Fault of Small GESA Contractor</u>. If, after Final Inspection, items of Work cannot be completed because of any of the following conditions:

a. Unseasonable considerations, such as bituminous paving, landscaping, etc.; or

b. The Funding Agency agrees that particular items need not be completed until a subsequent date; or

c. The Funding Agency delays the acceptance of the release of the Final Application for Payment for any unreasonable length of time, (reasonableness shall be determined by the Funding Agency)

The Funding Agency may agree to release payment to the Small GESA Contractor. The payment may be reduced by one and one-half (1-1/2) times the dollar value of uncompleted items.

12.11 <u>Approval to Release Final Payment Not Due Until Conditions Met</u>. Neither the approval to release final payment nor the remaining retained percentage becomes due until the Small GESA Contractor submits to the Funding Agency:

a. An affidavit that all payrolls, bills for materials and equipment, and other indebtedness connected with the work for which the Funding Agency might in any way be responsible, have been paid or otherwise satisfied by the Small GESA Contractor; and

b. Statements from the Small GESA Contractor's Surety Company and the Small GESA Contractor's certificate on forms satisfactory to the Funding Agency as to Small GESA Contractor's payment of all claims for labor, materials, equipment rentals and public utility services; and

c. If required by the Funding Agency, other data establishing payment or satisfaction of all such obligations, such as receipts, releases and waivers of liens arising out of the Contract, to the extent and in such form as is designated by the Funding Agency.

If any Subcontractor refuses to furnish a release or waiver, as required by the Funding Agency, the Small GESA Contractor may furnish a Bond satisfactory to the Funding Agency to indemnify the Funding Agency against any such lien. If any such lien remains unsatisfied after all payments are made, the Small GESA Contractor shall refund to the Funding Agency all moneys that the latter may be compelled to pay in discharging such lien, including all costs and reasonable attorney's fees.

12.12 Approval of the Release of Funds If Delay Is Not Due to the Fault of the Small GESA Contractor. If Final Inspection is materially delayed through no fault of the Small GESA Contractor, the Funding Agency shall, upon certification by the Small GESA Contractor's Retained Professional, make payment of the balance due for that portion of the Work fully completed and accepted by the Funding Agency. Such payment will not complete the contract. If the remaining balance of Work not fully completed or corrected is less than the retainage, and, if performance and payment bonds have been furnished as required, the Small GESA Contractor must submit to the Funding Agency, prior to certification of the payment, the written consent of the surety to the payment of the balance due for that portion of the Work fully completed and accepted by the Funding Agency. Such payment shall be made under the terms and conditions governing final payment, except that it does not constitute a waiver of any of the Funding Agency's claims against the Small GESA Contractor.

12.13 Final Payment as Waiver of Claims. The approval of the release of final payment constitutes a waiver of all claims by the Funding Agency, **except** those arising from:

a. Unsettled claims;

b. Faulty, nonconforming or defective work or material;

c. Failure of the work or material to comply with the requirements of the Contract Documents; or

d. Terms of any warranties, special warranties and/or special guarantees required by the Contract Documents.

12.14 Acceptance of Final Payment as Waiver of Claims. The acceptance of final payment by the Small GESA Contractor constitutes a waiver of all claims by the Small GESA Contractor against the Funding Agency.

ARTICLE 13

PROJECT CLOSEOUT

13.1 **Closeout Generally.** Project closeout consists of a Final Inspection which shall be a Project Milestone. The purpose of Final Inspection is to determine whether the Work is substantially complete and to produce a Punch List of incomplete work.

13.2 **Final Inspection.** Final Inspection occurs within thirty (30) days from the receipt of a written request by the Small GESA Contractor to the Funding Agency for a Final Inspection and an application for release of final payment. Final Inspection shall be conducted by the Retained Professional, and the Funding Agency. The Small GESA Contractor must be present throughout the duration of the Final Inspection.

a. The Small GESA Contractor is required to obtain the required occupancy permit from Labor and Industry prior to Final Inspection.

b. The Funding Agency has the sole authority, in light of the Project's Scope of Work, to determine whether parts or the whole of the Project is subject to a Final Inspection.

c. The Small GESA Contractor shall verify at Final Inspection that a complete set of contract prints, corrected with suitable markings to show all changes or variations from the original contract, including all items uncovered during the work and showing the details of the work as actually built, including but not limited to horizontal and vertical dimensional references of all concealed pipe, conduit and other lines and equipment have been prepared and delivered to the Funding Agency.

d. If the Funding Agency and the Small GESA Contractor's Retained Professional concur that the Work is substantially complete, the Small GESA Contractor's Retained Professional shall issue a Certificate of Final Completion and a certificate for release of final payment. In such case, the Professional shall produce and deliver to the Small GESA Contractor, at Final Inspection, a list of uncompleted items and a reasonable cost of completion (Punch List). The Punch List shall list in detail each uncompleted item and a reasonable cost of completion for each Punch List item. The Funding Agency shall be given the opportunity to review and accept the contents of the Punch List. The Small GESA Contractor shall complete all Punch List items within 30 calendar days of Final Inspection.

e. The Funding Agency will approve the release of final payment in full within 45 days from the date of Final Inspection, but the amount will be reflect a deduction of one and one-half times the amount required to complete any then-remaining uncompleted minor items and any other monies withheld in accordance with the certificate and the Contract Documents, which amount shall be certified by the Professional and concurred with by the Funding Agency. The Funding Agency' approval of the release of payment of any amount withheld for the completion of the Punch List or other items shall granted upon completion of the items in the Certificate.

f. If the Small GESA Contractor does not complete all Punch List items or show just cause to the satisfaction of the Funding Agency why they cannot be completed, the Funding Agency may take action, including but not limited to, assessing liquidated damages, correcting items and deducting the cost of completion from the amount retained or default the Small GESA Contractor and pursue its surety for completion of the Work.

g. If the Work is complete in accordance with the Contract Documents, a report of the Final Inspection shall be prepared by the Funding Agency in accordance with the Administrative Procedures. After successful Final Inspection, the Funding Agency may utilize the project and the warranty period shall commence.

ARTICLE 14

SUSPENSION

14.1 **Suspension of Work Due to Unfavorable Conditions or Weather.** If, in the judgment of the Funding Agency, the Small GESA Contractor takes undue risk of damage to any part of a the Project, including, but not limited to, soil compaction, foundation excavation, concrete placement or any exterior building construction, by proceeding with the Work during unfavorable weather or other conditions (not relating to the fault of the Small GESA Contractor or the convenience of the Funding Agency), the Funding Agency may issue a written notice of a temporary suspension of the Work for either the whole Contract or any part of the Contract, for such temporary period as the Funding Agency deems necessary. If the temporary suspension is due to unfavorable weather, the suspension may span the time period (days, weeks or months) encompassed by the unfavorable weather. In case of such suspension under this paragraph, a proper Extension of Time will be allowed for this excusable, non-compensatory delay, but the Small GESA Contractor may not, unless the suspension resulted from a force majeure weather event, submit any claim for any expense or damages resulting from the suspension. The failure of the Funding Agency to suspend the Work does not relieve the Small GESA Contractor of its responsibility to perform the Work in accordance with the Contract Documents.

14.2 **Suspension of Work due to Fault of Small GESA Contractor.** If the Small GESA Contractor fails to comply with the orders of the Funding Agency relative to any particular parts of the Work, the Funding Agency may issue a written notice of a temporary suspension of the Work for either the whole Contract or any part of the Contract until the orders respecting the particular parts are complied with by the Small GESA Contractor. In case of this type of suspension, which shall be considered due to the fault of the Small GESA Contractor, no Extension of Time shall be given and the Small GESA Contractor may not submit any claim for any expenses incurred by the Small GESA Contractor during the suspension period. Further, the Small GESA Contractor may be liable for any and all damages incurred by the Funding Agency due to the Small GESA Contractor's actions.

14.3 **Suspension of Work for the Convenience of The Funding Agency.** The Funding Agency may issue a written notice of a temporary suspension of the Work for the convenience of the Funding Agency for either the whole Contract or any part of the Contract for such period of time as the Funding Agency may determine to be

appropriate. This Paragraph does not apply to suspensions due to unfavorable weather or to suspensions due to Small GESA Contractor's fault.

a. If the performance of all or any part of the Work is suspended by the Funding Agency for an excessive period of time under this paragraph, an adjustment shall be made for any increase in the cost of performance of this Contract (excluding profit) necessarily caused by such excessive suspension. The Contract Sum shall be modified in writing accordingly. The Funding Agency will not pay any costs under this paragraph to the extent:

    i. Performance would have been concurrently suspended by any other cause, including weather, or the fault or negligence of the Small GESA Contractor; or

    ii. An equitable adjustment for the time period encompassed within the suspension has been provided for or excluded under any other provision of this Contract.

No claim for damages allegedly incurred under this paragraph shall be submitted under the Dispute Resolution Article unless the claim, in an amount stated, is asserted in writing within six months after the date of the Funding Agency's letter terminating the suspension.

14.4 **Resumption of Work.** When the Funding Agency directs resumption of the Work under this Article, the Small GESA Contractor shall resume full operations within ten (10) days after the date of the Funding Agency's letter terminating the suspension. The Funding Agency is not liable for any damages or anticipated profits on account of the Work being suspended, except as described in the Paragraph entitled Suspension of Work for Convenience of the Funding Agency. Suspensions of Work as outlined in this Article shall not automatically extend the Contract Completion Date. A request for an Extension of Time may be submitted by the Small GESA Contractor, setting forth its reasons for the extension, which the Funding Agency will review in accordance with the Administrative Procedures governing Extensions of Time.

ARTICLE 15

TERMINATION OF CONTRACT

15.1 **Termination for the Convenience of The Funding Agency.** The Funding Agency may, in accordance with the terms of the Installment Purchase Agreement, terminate this Contract. In such case, the Small GESA Contractor shall be paid (and shall accept payment) for that portion of the entire Contract actually performed satisfactorily as of the date of termination. Termination costs shall not include any loss of anticipated profits. Disputes as to the sum payable to the Small GESA Contractor shall be settled in accordance with the provisions of the Dispute Article of these General Conditions of the Contract.

15.2 **Small GESA Contractor's Default.** If the Small GESA Contractor:

a. Persistently or repeatedly refuses or fails to supply sufficient properly skilled workmen or proper materials; or

b. Persistently disregards laws, ordinances, rules, regulations or orders of any public authority having jurisdiction over the Project; or

c. Fails to proceed as directed by the Funding Agency; or

d. Performs the Work unsuitably; or

e. Neglects or refuses to remove materials or replace rejected Work; or

f. Discontinues the prosecution of the Work without approval of the Funding Agency; or

g. Otherwise breaches any material provision of this Contract, then the Funding Agency may, without prejudice to any of its other rights or remedies, give the Small GESA Contractor and its Surety written notice that the Small GESA Contractor has seven (7) days from the date of the Funding Agency's letter to cure the default. If the Small GESA Contractor fails to cure the default within the specified time, the Funding Agency may terminate the Contract between the Funding Agency and the Small GESA Contractor and may take possession of the site and of all materials and equipment, which has been paid for by the Funding Agency as of the date of termination. The Funding Agency may finish the Work by whatever method the Funding Agency may deem expedient. Upon termination, the Small GESA Contractor is not entitled to receive any further payment until the Work is finished, at which time the Small GESA Contractor shall be paid any excess remaining, in accordance with the Unpaid Contract Balance Paragraph below. The discretion to declare the Small GESA Contractor in default rests solely with the Funding Agency. No party, whether bound by Contract to the Funding Agency or attempting to raise a third party relationship, which this Contract specifically precludes, may state a cause of action against the Funding Agency alleging the failure of the Funding Agency to exercise its discretion to terminate the Small GESA Contractor.

15.3 **Unpaid Contract Balance.** If the unpaid balance of the Contract sum exceeds the cost of finishing the Work, including compensation for any other damages that the Funding Agency has incurred in accordance with the Contract, such excess shall be paid to the Surety. If such costs exceed the unpaid balance, the Small GESA Contractor or the surety or both shall pay the difference to the Funding Agency.

15.4 **Surety Replacement of Small GESA Contractor.** If the Funding Agency terminates the Small GESA Contractor, the surety will have thirty (30) days from the date of the termination letter to replace the terminated Small GESA Contractor with a completion contractor that is acceptable to the Funding Agency.

15.5 **Surety's Failure to Provide Replacement Small GESA Contractor.** If the surety fails to provide an acceptable Small GESA Contractor within thirty (30) days from the date of the termination letter, the Funding Agency may contract with a contractor to complete the Work in accordance with the Contract Documents.

15.6 **The Funding Agency's Right of Recovery.** The Funding Agency will hold the Surety responsible for any additional cost incurred by the Funding Agency as a result of the Small GESA Contractor's termination, including but not limited to, delay cost, acceleration cost, direct cost and consequential and incidental cost incurred by the Funding Agency.

ARTICLE 16: DISPUTES

16.1 **Small GESA Contractor Must Carry on Work During the Dispute Process.** The Small GESA Contractor may note that they are performing the Work under protest and may keep records of costs during the dispute resolution process but the Small GESA Contractor shall not refuse to perform as directed by the Funding Agency. The Small GESA Contractor must maintain the Project Schedule unless otherwise agreed to by the Funding Agency. If the Small GESA Contractor fails or refuses to perform as directed, this action will constitute a breach of contract and the Funding Agency may default the Small GESA Contractor and/or proceed to suspend and/or debar the Small GESA Contractor.

16.2 **Dispute Resolution is a 3-Step Process.** The Small GESA Contractor and the Funding Agency agree that any and all disputes arising out of this Contract are subject to a 3-step resolution process. The Small GESA Contractor and the Funding Agency agree that participation in each preceding step is a condition precedent to the Small GESA Contractor's right to pursue any and all unresolved disputes to the next step.

16.3 **Step 1: Field Dispute Review Meeting.** The Field Dispute Review Meeting is the initial step in identifying and attempting to reach a timely and equitable resolution of the variety of issues that arise on any construction project. The nature and structure of each Field Dispute Review Meeting shall be flexible and consist of an informal, good-faith discussion of the current status of the Project, and identification of potential and actual disputes.

a. Project Intervals: A Field Dispute Review Meeting ("FDR Meeting") will be scheduled by the Funding Agency to discuss issues arising as of the following intervals of the Project:

   i. At least once in every three (3) month period of the project duration.

   ii. At any other time deemed necessary by the Funding Agency.

b. Location: The Funding Agency will schedule a mutually convenient date and time for each FDR Meeting. If possible, the FDR Meeting should be convened at the Project site.

c. Attendees: The Small GESA Contractor shall attend each Field Dispute Review Meeting. The Small GESA Contractor's Retained Professional shall attend each Field Dispute Review Meeting. The Funding Agency will chair the Meeting.

d. Procedure: As the Project progresses and the time for a FDR Meeting approaches, the Funding Agency should establish the date for the meeting during the discussion at a bi-weekly Job Conference.

The Small GESA Contractor must fill out a Field Dispute Review Meeting Form, a sample of which appears in the Disputes Administrative Procedure. This Form should be submitted to the Funding Agency and provided to the Small GESA Contractor's Retained Professional approximately 1 week prior to the FDR meeting. The information on this Form should provide sufficient information to allow attendees to research potential disputes, review the Contract Documents, review the Project Schedule and examine site conditions prior to the Meeting. In all cases of misunderstanding and disputes, allegations that verbal instruction was given will not be considered. The Small GESA Contractor must produce written documentation in support of its contentions and shall advance no claim in the absence of such written documentation, or use or attempt to use any conversation with any parties against the Funding Agency, or in prosecuting any claim against the Funding Agency.

e. FDR Meeting: The Funding Agency shall convene the Field Dispute Review Meeting.

   i. The FDR Meeting shall not be subject to 2 Pa. C.S. (relating to administrative law and procedure).

   ii. Neither audio recording nor videotaping will be allowed during the FDR Meeting.

   iii. No transcripts will be taken but attendees are free to take their own notes.

   iv. The Meeting may be moved out to the field for visual inspection of the condition if necessary to understand and resolve the issue.

   v. The Funding Agency will allow all parties a reasonable time to present and discuss the disputes raised in the Small GESA Contractor's FDR Meeting Form.

   vi. The Small GESA Contractor's representative (who should be an employee in the field who is familiar with the day-to-day work on the Contract) shall present a description of:

      1. The Work performed since the last Field Dispute Review Meeting; and

      2. The Work to be performed in the near future; and

      3. The status of disputes raised at any previous FDR Meeting; and

      4. New disputes that have arisen since the previous FDR Meeting. For each new dispute:

         a. Set forth the schedule impacts, which may only be presented using the current Project Schedule; and

         b. Set forth a proposed solution to the dispute, including:

            1. Days needed in any Extension of Time; and/or

            2. Damages attributed to the dispute; and'

            3. Identify the party the Small GESA Contractor believes is responsible for creating the dispute.

   vii. The Funding Agency's representative shall present a description of:

1. their understanding of the Work performed since the last FDR Meetings; and
2. the Work to be performed in the near future; and
3. status of disputes raised at the previous FDR Meeting; and
4. a response to the new dispute(s) raised by the Small GESA Contractor, including:
    a. The Funding Agency's view of the schedule impact, which may only be presented using the current Project Schedule; and
    b. The Funding Agency's response to the Small GESA Contractor's proposed solution; and
    c. the identity of the party the Funding Agency believes is responsible for creating the dispute.

f. Within two weeks of the FDR Meeting, the Funding Agency will render a written decision on the issues raised during the FDR Meeting. The decision will be issued to all attendees. The decision is not binding upon any party.

g. If any party is dissatisfied with the decision reached at the FDR Meeting, they may appeal the decision to the second step in the dispute process.

h. **Any issue or dispute arising on the Project must be presented at the first FDR Meeting after the dispute arose. If a Small GESA Contractor fails to raise an issue at the appropriate FDR Meeting (i.e., an issue arising during first 25% of contract duration must be presented at the 25% FDR Meeting and may not be presented later at the 50% FDR Meeting) then the Small GESA Contractor is deemed to have waived the issue.**

i. **Only claims raised during an FDR Meeting may be appealed to the Claim Conference stage.**

16.4 **Step 2: Claim Settlement Conference.** The second step in the dispute resolution process is a Claim Settlement Conference, which is a more formal step in the process and is described in general in §1712.1 of the Commonwealth Procurement Code.

a. Time to File A Claim: Under this second step of the process, the Small GESA Contractor may appeal the FDR Meeting decision by submitting a written claim to the Deputy Secretary or designee for the Funding Agency.

b. **Any issue or dispute arising on the Project that is not mutually resolved at the FDR Meeting stage may only be appealed to the Claim Settlement Conference stage. If the Small GESA Contractor fails to pursue any unresolved FDR Meeting issue to a Claim Conference within the 6-month time frame set forth below, then the Small GESA Contractor is deemed to have waived the issue.**

c. **A claim accrues under this Step upon the date of the Funding Agency's written decision. If the Small GESA Contractor decides to appeal the decision reached at the FDR Meeting, the Small GESA Contractor must file an appeal of the decision to the Deputy Secretary or designee within six months of the date of the Funding Agency's decision. If the Small GESA**

Contractor fails to file a written request within this time period, the Small GESA Contractor is deemed to have waived its right to assert the claim in any forum. The Deputy Secretary or designee will disregard untimely claims.

d. Contents of the Claim: The claim filed by the Small GESA Contractor with the Deputy Secretary **or designee** shall state **all grounds** upon which the Small GESA Contractor asserts a controversy exists. The claim must contain, at a minimum:

   i. The Claim Settlement Conference request form set forth in the Disputes Administrative Procedure; and

   ii. The documentation submitted by the Small GESA Contractor to the Funding Agency during the FDR Meeting to substantiate the Small GESA Contractor's view of the issue; and

   iii. The Funding Agency's decision.

e. Date of the Claim Conference: The Deputy Secretary or a designee will schedule a mutually convenient date and time for the Claim Settlement Conference.

f. Attendees: All parties identified in the Claim Packet or deemed necessary by the Funding Agency shall attend the Claim Settlement Conference. At a minimum, the Small GESA Contractor, the Small GESA Contractor's Retained Professional and a representative from the Funding Agency shall attend the Claim Settlement Conference.

g. Procedure: The Deputy Secretary or a designee will convene the Claim Settlement Conference.

   i. The Claim Settlement Conference shall not be subject to 2 Pa. C.S. (relating to administrative law and procedure).

   ii. Neither audio recording nor videotaping will be allowed during the Claim Settlement Conference.

   iii. No transcripts will be taken but attendees are free to take their own notes.

   iv. The Deputy Secretary or a designee will allow all parties a reasonable time to present and discuss the issues.

   v. The Small GESA Contractor's representative shall present a description of the issue, including:

      1. the factual background of the issue;

      2. the schedule impacts, which may only be presented using the current Project Schedule; and

      3. the proposed solution to the dispute, including:

         a. days needed in any Extension of Time; and/or

         b. damages attributed to the dispute; and

         c. identify the party the Small GESA Contractor believes is responsible for creating the dispute.

vi. The Funding Agency's representative shall present a description of:

1. a response to the dispute(s) raised by the Small GESA Contractor, including:

a. The Funding Agency's view of the schedule impact, which may only be presented using the current Project Schedule; and

b. The Funding Agency's response to the Small GESA Contractor's proposed solution; and

c. the identity of the party the Funding Agency believes is responsible for creating the dispute.

h. The Deputy Secretary or designee will render a final determination on the issue(s) raised during the Claim Settlement Conference within 120 days of the receipt of the claim by the Deputy Secretary or designee. The parties may, during the 120 day period, mutually agree to extend the 120-day deadline. If extended, the Deputy Secretary or designee will issue written confirmation of the extension. If no decision is rendered within the 120 days, the claim is deemed to be denied on the 120th day. The determination of the Deputy Secretary or designee shall be the final order of the Funding Agency with regard to the issue(s).

16.5 **Step 3: Filing a Claim at the Board of Claims.** The third step in the dispute resolution process is filing a Statement of Claim with the Board of Claims, which is a more formal step in the process and is described in general in §1712.1 and §1721 et seq. of the Commonwealth Procurement Code.

a. Time to File a Statement of Claim. Within fifteen (15) days of:

i. The mailing date of the Deputy Secretary's final determination denying a claim; or

ii. Within 135 days of the date the Small GESA Contractor files a claim with the Deputy Secretary if no final determination has been rendered and no extension has been agreed to,

whichever occurs first, the Small GESA Contractor may proceed to the third stage of the dispute resolution process by filing a claim with the Board of Claims in Harrisburg.

b. **Only claims that were raised during a Claim Settlement Conference may proceed to the Board of Claims.**

ARTICLE 17

MISCELLANEOUS CONDITIONS

17.1 **Project Sign.** No signs of any kind shall be placed anywhere on the project site without the explicit written permission of the Funding Agency. Signs for safety instruction, direction of traffic, instruction of visitors to the site and site restrictions shall be fabricated, erected and maintained by the Small GESA Contractor as required at no additional cost to the Funding Agency. Upon Completion of the work, or when directed by the Funding Agency, the Small GESA Contractor shall remove signs.

17.2 **Temporary Ventilation.** The Small GESA Contractor shall provide temporary ventilation to remove from the structure any excessive heat and/or humidity in enclosed portions of the Work, resulting from its construction operations so that the Work may be carried on without interruption and under correct conditions, including required dryness for installation of the various materials. Removing any dangerous or noxious fumes or particles suspended in the air is the responsibility of the Small GESA Contractor. Temporary equipment used for this temporary ventilation shall produce no hazard to the Work or to any person in or near it. The Small GESA Contractor shall furnish all such temporary equipment; pay all costs for it and for its operation, including fuel and power supplies during operation both in and out of normal working hours. The Small GESA Contractor shall remove the equipment when it is no longer required, or when so directed by the Funding Agency.

17.3 **Work Beyond Limit of Contract.** For purposes of performing the Work, the site is defined by the Limit of Contract lines shown on the drawings. The Small GESA Contractor is responsible for any work performed beyond the limit of Contract.

17.4 **Advertising.** No advertising is permitted within the Work area or adjacent area. This does not apply to corporate vehicles or attire.

17.5 **Federal and A.S.T.M. and Other Specifications.** Reference to Federal, A.S.T.M. and other standard specifications references and designations means those in effect at the date of bid. Basic codes and regulations incorporated by reference, standard regulations and codes refer to editions in effect at the date of proposals, including current addenda or errata. The most stringent section of each code applies.

17.6 **Storage and Stockpiling on Roofs.** No materials of any type may be stored or stockpiled overnight on roofs.

17.7 **Audit of Records.** The Funding Agency may, at reasonable times and places, audit the books and records of the Small GESA Contractor. The Small GESA Contractor shall maintain books and records related to the Contract for a period of three (3) years from the date of final payment. The Small GESA Contractor shall include a requirement in contracts with subcontractors or suppliers that requires the Subcontractor or Supplier to maintain its records for the same length of time.

17.8 **Reduction of Noise.** The Small GESA Contractor must take reasonable steps to minimize noise and shall perform work in accordance with local noise ordinances. The Small GESA Contractor shall perform noise-producing work in less sensitive hours of the day or week as directed by the Funding Agency. The Small GESA Contractor shall maintain noise-producing work at or below the decibel levels and within the time periods specified and shall perform construction activities involving repetitive, high-level impact noise only between 8:00 a.m. and 6:00 p.m. unless otherwise permitted by the Funding Agency and permissible by local ordinance.

17.9 **Visible Dust Emissions**. No person shall perform any construction, demolition, excavation, extraction, or other earthmoving activities unless appropriate measures are sufficiently implemented to limit Visible Dust Emissions (VDE) to 20% opacity and comply with the conditions for a stabilized surface area when applicable. The Small GESA Contractor shall apply sufficient water to building exterior surfaces, and/or unpaved surface areas where equipment will operate to limit VDE to 20% opacity throughout the duration of razing and demolition activities or handling, storage, and transport of bulk materials on-site or off-site. The Small GESA Contractor shall apply sufficient dust suppressants to unpaved surface areas within 100 feet where materials from razing or demolition activities will fall in order to limit VDE to 20% opacity. The Small GESA Contractor shall also apply sufficient dust suppressants to unpaved surface areas where wrecking or hauling equipment will be operated in order to limit VDE to 20% opacity.

ARTICLE 18

LEGAL MATTERS

18.1 **No Estoppel or Waiver of Legal Rights.** The Funding Agency is not precluded or estopped by the measurements or the release of Applications for Payment made or given by the Funding Agency from showing the true and correct amount and character of the Work performed and materials and equipment furnished by the Small GESA Contractor. The Funding Agency may show, at any time, that any such measurements or approvals of release of Applications for Payment are untrue or incorrectly made in any particular, or that the Work or materials, equipment or any parts thereof do not conform to the specifications and the Contract. The Funding Agency may reject the whole or any part of the aforesaid Work or materials and equipment if the measurements or approval of release of Applications for Payment are found or become known to be inconsistent with the terms of the Contract, or otherwise improperly given. The Funding Agency may, notwithstanding any such measurements or approval of release of Applications for Payment, demand and recover from the Small GESA Contractor, its surety, or both, such damages as the Funding Agency may sustain by reason of the Small GESA Contractor's failure to comply with the terms of the specifications and the Contract, or on account of any overpayments made on any approved for release Application for Payment. Neither the acceptance by the Funding Agency nor any certificate accepted for payment of money, nor any approval for release of payments, nor acceptance of the whole or any part of the Work by the Funding Agency nor any Extension of Time, nor any position taken by the Funding Agency operates as a waiver of any portion of the Contract or any power herein reserved by the Funding Agency or any right to damages. A waiver of any breach of the Contract will not be held to be a waiver of any other or subsequent breach.

18.2 **Law of the Place.** The Contract shall be governed by the Laws of the Commonwealth of Pennsylvania.

18.3 **Successors and Assigns.** This Small GESA Contract shall be binding on the parties hereto, their heirs, executors, administrators, successors and assigns. No part of this Contract may be assigned by the Small GESA Contractor without the prior written consent of the Funding Agency.

18.4 **Written Notice.** Written notice is duly served if delivered in person to the individual or member of the firm or to an officer of the corporation for whom it was intended, or mailed to its post office box address, if any, or addressed to the Small GESA Contractor at its place of business as set forth in the Standard Form of Contract. Wherever the term "notice" is used, such notices, to be effective, shall be in writing and, if to the Funding Agency, shall be mailed by Certified or Registered mail, postage and fees prepaid, or shall be delivered, in person, to the Deputy Secretary for Public Works, Department of General Services, 18th & Herr Streets, Harrisburg, Pennsylvania 17125.

18.5 **Claims for Damages: Legal Relations and Responsibilities.** Contracts covered by these General Conditions are not to be construed as being made for the benefit of any person or political subdivision not a party to this Contract, nor shall this Contract be construed to authorize any person or political subdivision, not a party to this Contract, to maintain any lawsuit hereunder, nor shall this Contract be construed to constitute the basis for the maintenance of any lawsuit by any person, or political subdivision not a party hereto.

18.6 **Royalties and Patents.** The Small GESA Contractor shall pay all royalties and license fees. The Small GESA Contractor shall defend all suits or claims for infringement of any patent rights and shall hold the Funding Agency harmless from loss on account thereof.

18.7 **Personal Responsibility and Work Opportunity Reconciliation Act.** Pursuant to the Personal Responsibility and Work Opportunity Reconciliation Act of 1996 (Act 58 of 1997, as amended), all employers are required to report information on newly-hired employees to a designated state agency. The Commonwealth of Pennsylvania has designated the Department of Labor and Industry as that agency. For information concerning this requirement call 1-888-PAHIRES.

18.8 **Prevailing Minimum Wage Predetermination.** The Small GESA Contractor is hereby notified that this Contract is subject to the provisions, duties, obligations, remedies and penalties of the Pennsylvania Prevailing Wage Act, 43 P.S. §165-1 et seq., as amended, which is incorporated herein by reference as if fully set forth herein. In compliance with said Pennsylvania Prevailing Wage Act, the Prevailing Minimum Wage Predetermination is hereto attached and made part hereof as approved by the Secretary of Labor and Industry. If a job classification is not covered by the Prevailing Wage Predetermination, the Small GESA Contractor may not pay individuals in that classification less than the lowest rate for laborers, as set out in the predetermination.

18.9 **Public Works Employment Verification Act.** The Small GESA Contractor is hereby notified that this contract is for a public work and the Small GESA Contractor is therefore subject to the provisions, duties, obligations, remedies and penalties of the Public Works Employment Verification Act, 43 P.S. §§167.1-167.11, which is incorporated herein by reference as if fully set forth herein. Contractors subject to said Public Works Employment Verification Act are required to utilize the Federal E-Verify program to verify the employment eligibility of each new employee hired after January 1, 2013 and to submit to the Department a Commonwealth Public Works Employment Verification Form available on the Department's web site at www.dgs.state,pa.gov.

18.10 **Steel Products Procurement Act.** The Small GESA Contractor is hereby notified that this contract is for a public work and the Contractor is therefore subject to the provisions, duties, obligations, remedies and penalties of the Steel Product Procurement Act, 73

P.S. §§1881-1887, as amended, which is incorporated herein by reference as if fully set forth herein. The Small GESA Contractor must refer to the Department's web site at www.dgs.pa.gov for information regarding the Steel Products Procurement Act and the current list of exempt machinery and equipment steel products.

18.11 Tobacco Use on Project Site. Use of tobacco products (smoke and smokeless) shall be restricted on site after the building has been enclosed (with permanent or temporary enclosures). Personnel found in noncompliance with this directive may be removed from the site upon discovery of this noncompliance.

18.12 Right-to-Know Law. The Pennsylvania Right-to-Know Law, 65 P.S. §§ 67.101-3104, applies to this Contract.

a. Unless the Small GESA Contractor provides the Commonwealth, in writing, with the name and contact information of another person, the Funding Agency shall notify the Small GESA Contractor using the Small GESA Contractor information provided by the Small GESA Contractor in the legal contact information provided in this Contract if the agency needs the Small GESA Contractor's assistance in any matter arising out of the Right to Know Law ("RTKL"). The Small GESA Contractor shall notify the agency in writing of any change in the name or the contact information within a reasonable time prior to the change.

b. Upon notification from the Commonwealth that the Commonwealth requires the Small GESA Contractor's assistance in responding to a RTKL request for records in the Small GESA Contractor's possession, the Small GESA Contractor shall provide the Commonwealth, within fourteen (14) calendar days after receipt of such notification, access to, and copies of, any document or information in the Small GESA Contractor's possession which arises out of the Contract that the Commonwealth requests ("Requested Information") and provide such other assistance as the Commonwealth may request in order to comply with the RTKL. If the Small GESA Contractor fails to provide the Requested Information within fourteen (14) calendar days after receipt of such request, the Small GESA Contractor shall indemnify and hold the Commonwealth harmless for any damages, penalties, detriment or harm that the Commonwealth may incur as a result of the Small GESA Contractor's failure, including any statutory damages assessed against the Commonwealth.

c. The Commonwealth's determination as to whether the Requested Information is a public record is dispositive of the question as between the parties. Small GESA Contractor agrees not to challenge the Commonwealth's decision to deem the Requested Information a Public Record. If the Small GESA Contractor considers the Requested Information to include a request for a Trade Secret or Confidential Proprietary Information, as those terms are defined by the RTKL, the Small GESA Contractor will immediately notify the Commonwealth, and will provide a written statement signed by a representative of the Small GESA Contractor explaining why the requested material is exempt from public disclosure under the RTKL within seven (7) calendar days of receiving the request. If, upon review of the Small GESA Contractor's written statement, the Commonwealth still decides to provide the Requested Information, Small GESA Contractor will not challenge or in any way hold the Commonwealth liable for such a decision.

d. The Commonwealth will reimburse the Small GESA Contractor for any costs associated with complying with this provision only to the extent allowed under the fee schedule established by the Office of Open Records or as otherwise provided by the RTKL if the fee schedule is inapplicable.

e. Small GESA Contractor agrees to abide by any decision to release a record to the public made by the Office of Open Records, or by the Pennsylvania Courts. The Small GESA Contractor agrees to waive all rights or remedies that may be available to it as a result of the Commonwealth's disclosure of Requested Information pursuant to the RTKL. Small GESA Contractor's duties relating to the RTKL are continuing duties that survive the expiration of this Contract and shall continue as long as the Small GESA Contractor has Requested Information in its possession.

END

APPENDIX I

- Small GESA Contract Administrative Procedures



ADMINISTRATIVE PROCEDURES FOR SMALL GESA CONTRACTS

HARRISBURG, PENNSYLVANIA

2015 EDITION

TABLE OF CONTENTS

Administrative Procedure #1
Correspondence

Administrative Procedure #2
Orientation Meeting

Administrative Procedure #3
Job Conferences and Design Progress Meetings

Administrative Procedure #4
Contract Breakdown Sheet – Form GSC-30

Administrative Procedure #5
Project Schedule – Form GSC-35
and Critical Path Method (CPM) Scheduling

Administrative Procedure #6
Request for Approval of Materials
and/or Subcontractors – Form GSC-23

Administrative Procedure #7
Materials Testing (All Items – General Requirements)
Laboratory Sample or Field Test Identification – Form GSC-22/33
Materials Testing (Selection of Testing Laboratory)
Concrete Testing (Approval of Mix Computations)
Concrete Mix Computation – Form GSC-26
Invoice Procedure for Payment of Testing Services
(Small GESA Contractor's Retained Professional)
Invoice and Billing for Small GESA Contractor's Retained Professionals
and Testing Laboratories – Form GSC-34
Manufacturers' High Voltage Cable Test (Birth Certificate)
Field High Voltage Cable Test
HVAC Systems Balancing

Administrative Procedure #8
Submittals

Administrative Procedure #9
Small GESA Contractor's Application for Release of Payment
Prevailing Minimum Wage Certificate – Form GSC-16
Recap. of Small GESA Contractor's Application for Release of Payment – Form GSC-17
Application for Release of Payment of Labor, Materials/Equipment – Form GSC-18
Stored Materials – Form GSC-43
Payroll Affidavit, Small GESA Contractor's Certificate and Statement of Surety,
Power of Attorney – Form GSC-24

Administrative Procedure #10

Changes in Contract Work (Field Orders/Change Orders)
Construction Change Order – Form GSC-1

Administrative Procedure #11

Request for Extension of Time Change Order – Form GSC-5

Administrative Procedure #12

Submission Guidelines for Steel Certificates for DGS Projects
Pursuant to The Steel Products Procurement Act P.S. §1881, et. seq.
Steel Origin Certification: Small GESA Contractor – Form ST-1
Steel Origin Certification: Fabricator – Form ST-2
75% U.S. Manufacture Certification: Fabricator – Form ST-3
Not Domestically Manufactured: Small GESA Contractor – Form ST-4

Administrative Procedure #13

Occupancy/Utilization Inspection
Certificate of Occupancy/Utilization – Form GSC-46
Final Completion Inspection
Certificate of Final Completion and Final Payment – Form GSC-47

Administrative Procedure #14

Field Dispute Resolution Form

Administrative Procedure #15

Small Diverse Business Participation

THE TERM "DGS" MAY APPEAR IN THIS DOCUMENT AND THE GSC FORMS BUT, IT SHALL MEAN "FUNDING AGENCY."

ADMINISTRATIVE PROCEDURE #1

CORRESPONDENCE

A. Identification of Correspondence

1. Correspondence (letters, transmittals, memos) and forms should be sent and received, whenever possible, as an email attachment. Individual email addresses will be exchanged during either the Project Orientation Meeting or the Initial Design Progress Meeting. US Mail and package delivery should be kept to a minimum.

    a If printing on paper is necessary, the item should be printed on both sides of the paper.

2. All correspondence must be identified by the Contract Number, Project Name, Facility, and a brief summary of the issue.

3. Following is an example of proper identification for email subject line: Small GESA-4, DCNR Western Region

B. Addressing and Distribution of Correspondence

Letters, transmittals and forms shall be emailed with the distribution to include, at a minimum, personnel indicated below. The email addresses of the specific individuals who will be involved with the project will be identified at either the Orientation Meeting or the Initial Job Conference.

During Design Phase:

DGS Director of Energy and Resource Management (Energy Coordinator)
Energy Engineer
Funding Agency Person assigned to project
Small GESA Contractor's Retained Professional

During Construction:

Funding Agency Person assigned to project
Energy Coordinator
Energy Engineer
Small GESA Contractor's Retained Professional

ADMINISTRATIVE PROCEDURE #2

ORIENTATION MEETING

A. Scheduling of Orientation Meeting

1. The Orientation Meeting will be held prior to the Initial Design Progress Meeting. The Funding Agency will contact the Small GESA Contractor by letter within ten days after the Small GESA contract effective date to schedule this meeting. The Funding Agency will also inform the Energy Coordinator and the Energy Engineer of the meeting. The purpose of the Orientation Meeting is to familiarize the Small GESA Contractor with the Small GESA procedures and forms to be used during design and construction and to review the Funding Agency's requirements for design services, design progress meetings, submissions, regulatory and other approvals, construction phase meetings, and other items including the project schedule.

2. Personnel from the Small GESA Contractor's office, such as the principal of the firm, Project manager and Project superintendent, the Small GESA Contractor's Retained Professional and its consultants, and the Small GESA Contractor's HVAC, plumbing and electrical subcontractors must attend since instructions will be given on completion of forms. All Forms may be downloaded on DGS' website.

3. During the Orientation Meeting, the Funding Agency or designee shall conduct the order of business and discuss specific requirements and particulars of the project.

B. Agenda for Orientation Meeting

1. Introduction of all project participants by the Funding Agency and exchange of email addresses and phone numbers for all project participants.

2. Explanation of Administrative Procedures and forms.

    a All Forms may be downloaded on DGS' website.
    b The Funding Agency will not distribute paper copies of any forms.

3. Overview of the Project Scope and Schedule.

4. Review of design, submission and approval requirements.

5. At the Orientation Meeting, the Energy Engineer will set a time, date, and place for the Initial Design Progress Meeting, which will be no later than the tenth day following the Orientation Meeting.

6. Question and answer period.

ADMINISTRATIVE PROCEDURE #3

DESIGN PROGRESS MEETINGS AND JOB CONFERENCES

A. General Information Regarding Job Conferences and Design Progress Meetings

1. Design Progress Meetings are held to address and document Design Phase activities and progress on the Project.

2. Job Conferences are held to address and document Construction Phase activities and the progress on the Project.

3. The Orientation Meeting will be held prior to the Initial Design Progress Meeting. Job Conferences will be scheduled by the Funding Agency subsequent to the commencement of on-site work by the Small GESA Contractor.

4. In the event that site development construction work begins prior to the completion of the Design Phase, both Job Conferences and Design Progress Meetings will be scheduled as required. The Small GESA Contractor's Retained Professional and the Funding Agency may elect to schedule these meetings on the same date.

B. Design Meetings

1. General Information Concerning Design Progress Meetings

   a The following persons are required to attend Design Progress Meetings:

      i Small GESA Contractor's Project Manager or equivalent
      ii Small GESA Contractor's Professional or Retained Professional and its consultants
      iii Funding Agency representative(s)

   b The following representatives are permitted, but not required, to attend any Design Progress Meeting:

      i Energy Coordinator
      ii Energy Engineer

   c During the Design Progress Meetings, the Small GESA Contractor's Professional or Retained Professional or designee shall conduct the order of business. The Small GESA Contractor's Professional shall take the minutes of Design Progress Meetings. Within ten days of the meeting or not less than two days prior to the next Design Progress Meeting, whichever occurs first, the appointed individual shall email a copy of the minutes to each addressee listed on the record.

2. Initial Design Progress Meeting Agenda

   a Introduction of attendees.

   b Explanation by Funding Agency of relevant portions of the GESA Design Manual and associated forms. The Small GESA Contractor may use the Design Manual included in the RFP as a guide. The discussion will include:

      i Meeting minutes and correspondence
      ii Project schedule, submissions and reviews
      iii Project scope and changes

iv Required Funding Agency approvals
v Pre-design activities

- Site visit and existing conditions verification
- Available existing documents acquisition and review
- Code analysis verification
- Proprietary and restricted products
- Final Submission requirements
- Drawing, specification and design standards to be met.

vi Review and verification of materials included with the RFP, as applicable:

- Scope of work and technical requirements
- Site drawings, utilities and interferences
- Environmental, archaeological and related impacts
- Facility prototype drawings
- Identified adjustments or corrections required to prototype
- Structural criteria including geotechnical report impacts
- HVAC, plumbing, fire protection and electrical criteria
- Security criteria
- Codes, regulatory approvals and permits
- Summarize determinations regarding site and facility criteria.
- Submission requirements to Labor and Industry Building and Boiler.

c Other topics raised for discussion

d Establish date, time and location for the next Regular Design Progress Meeting

C. Regular Design Progress Meetings

1. The Small GESA Contractor will hold Regular Design Progress Meetings as often as deemed necessary, however, in no case less than monthly unless a longer interval is approved, in writing/email, by the Funding Agency.

2. The Small GESA Contractor Professional, or designee, shall determine the required agenda, notify all required participants by email and conduct the meeting among all those concerned with Project design. The agenda of a Regular Design Progress Meeting shall include the following:

a General Review of minutes of the previous Design Progress Meeting with progress on Action Items, as noted on previous Design Progress Meeting minutes. The manner in which the item was addressed should also be noted. Action Items will be included in each report until resolved.

b Presentation of current drawings and specifications

c Discussion of progress and identification of new Action Items

d Review of Design Progress Schedule with special attention given to items that are behind schedule.

e Projected work for the next bi-weekly period

f Delays with the Small GESA Contractor identifying any outstanding Action Item that may delay the completion of the design.

g Information to be incorporated into completed minutes should include percentage of elapsed design time and estimated percentage contract document completion; date, time and place of the next Design Progress Meeting; and the name of the person who prepared the minutes.

h The Small GESA Contractor Retained Professional will email the Design Progress Meeting minutes to the following:

i Small GESA Contractor
ii Small GESA Contractor's Retained Professional
iii Funding Agency
iv Energy Coordinator
v Energy Engineer

D. General Information Concerning Job Conferences during Construction Phase

1. The following persons are required to attend Regular Job Conferences:

a Small GESA Contractor's Project Manager or equivalent

b Small GESA Contractor's Professional or Retained Professional

c The Funding Agency

i If necessary, the Funding Agency will schedule Special Job Conferences and will specify the required attendees.

2. The following representatives are permitted, but not required, to attend any Job Conference:

a Energy Coordinator

b Energy Engineer

c Other representatives, as appropriate (determined by the Funding Agency)

3. The Small GESA Contractor's Professional shall create minutes of Job Conferences. A copy of the minutes shall be emailed to each attendee before the next Job Conference.

4. Failure of the Small GESA Contractor representative to attend any Job Conference is a violation of the Small GESA Contract.

E. Initial Job Conference

1. **Notice and attendance**

a The Funding Agency will set a time, date, and place for the Initial Job Conference (IJC), which will be no later than the fifteenth day following approval of the Final Design. **The Small GESA Contractor and all subcontractors are expected to have reviewed and familiarized themselves with the Administrative Procedures prior to the IJC.**

i The email notification of the time, date and place of the IJC shall be sent to:

- Small GESA Contractor
- Small GESA Contractor's Professional or Retained Professional
- Funding Agency representative(s)
- Energy Coordinator
- Energy Engineer
- DGS Bureau of Diversity, Inclusion and Small Business Opportunities

2. During the IJC, the Funding Agency shall conduct the order of business and discuss specific requirements and particulars of project construction.

3. The GESA Professional shall attach a separate sheet to the minutes of the IJC Report, indicating the names, email addresses and telephone numbers of the Small GESA Contractor, the Small GESA Contractor′s Retained Professional, appointed Funding Agency personal, the Energy Coordinator, and the DGS Energy Engineer, assigned to the project.

4. Agenda for Initial Job Conference

a Introduction of attendees.

b Explanation of Small GESA Administrative Procedures and associated forms. The Funding Agency will not provide the Small GESA Contractor with a copy of the Administrative Procedures with the Orientation Packet..

c Permits, Fees, Notices, Safety

d Establish Small GESA Contractor′s projected start date for on-site construction work.

e Establishment of date, time and location of the first Regular Job Conference

f Review of Small GESA Contractor contract General Conditions

g General Comments

F. Construction Job Conferences

1. The Funding Agency will hold bi-weekly Job Conferences unless a longer interval is mutually accepted. The GESA contractor is responsible for meeting minutes.

2. The agenda of a Regular Job Conference shall include the following:

a General Review of Previous Report

i Unsatisfactory conditions and/or workmanship noted on previous Job Conference Reports must be noted when corrected and accepted on first report following correction. The manner in which the correction was made should also be noted. The unsatisfactory item will be included in each report until correction is made.

b General discussion of Job Conditions

c Review of past due Shop Drawings

d Review of outstanding Change Orders

e Review of Progress Schedule

- Special attention will be given to items that are behind schedule.

f Projected work for the next bi-weekly period

g Delays

- The Small GESA Contractor should pay special attention to ensure that any delays are documented on the Job Conference Reports, since Extensions of Time will be determined from the information provided at the Job Conference.

h Information to be incorporated into completed Job Conference Reports may include, but is not limited to, percentage of elapsed Project time; percentage of Project payment; percentage of Project job completion (based upon physical inspection); date, time and place of the next Project job conference; and the name of the person who prepared the report.

i Job Conference Reports will be emailed as an attachment by the Funding Agency to the following:

Small GESA Contractor
Small GESA Contractor's Retained Professional
Funding Agency
Energy Coordinator
Energy Engineer

G. Special Job Conferences

1. The Funding Agency, or representative, may call a Special Job Conference to consider any emergency or unusual job condition. Only the subject(s) mentioned in the notice of the Special Job Conference shall be discussed.

ADMINISTRATIVE PROCEDURE #4

A. CONTRACT BREAKDOWN SHEET (FORM GSC-30)

1. The Small GESA Contractor shall prepare and submit the Contract Breakdown Sheet ("GSC-30") to the Funding Agency for its approval within 45 days of the effective date of the Small GESA Contract and prior to submission of the Small GESA Contractor's first Application for Release of Payment. The Small GESA Contractor will use the Cost Submission form completed in response to the AFQ and the RFP as the basis for the GSC-30. The Funding Agency will require at least ten working days to review and approve the GSC-30 or any Supplemental GSC-30.

2. The Small GESA Contractor may request a meeting with the Funding Agency for the purpose of reviewing a work copy of the GSC-30. The Small GESA Contractor shall prepare the GSC-30 work copy prior to the requested meeting. This meeting does not trigger a submission for purposes of the Prompt Payment Act.

3. Following review of the GSC-30 work copy by the Funding Agency, the Small GESA Contractor shall email the final GSC-30 to the Funding Agency.

   a The Funding Agency shall review the GSC-30 with their designated personnel and the Funding Agency personnel assigned to the Project shall sign the bottom of the GSC-30.

   b The Funding Agency shall review and approve the Small GESA Contractor's Applications for Payment in accordance with language included in the project-specific Small GESA RFP without DGS participating in the review or approval of any Applications for Payment.

   c In reviewing the GSC-30, the Funding Agency should utilize the items set forth under General Information for this Administrative Procedure. The Funding Agency-approved GSC-30 will be the basis for the Small GESA Contractor's Applications for Release of Payment. The Funding Agency may also use the GSC-30 to determine the cost or credit to the Funding Agency resulting from changes in the work.

4. General Information

   a The Small GESA Contractor shall show the Contract Bond as the first item. The bond cost shall not exceed the actual amount paid by the Small GESA Contractor.

   b If a Roof Bond/Guarantee is required, it must be listed separately as the second item.

   c Temporary heat, if required by the Contract Documents, must be shown on the GSC-30 as a separate line item, which must be the last item on the GSC-30 and must include the number of days, the Unit Price per twenty-four hour day, and the extension of the figures. Any adjustment to the number of days of temporary heat, used or not, must be based on the Unit Price shown on the breakdown.

   d The Small GESA Contractor must list items according to Energy Conservation Measures and break the ECMs into buildings or floors.

e The Small GESA Contractor shall include separate line items for Retained Professional's services during design and during construction. The sum of these items shall match the fee established in the contract between the Small GESA Contractor and their Retained Professional. No more than 50% of the fee may be included in the design line item and no more that 25% may be included in the line item for administration and review services during construction. The remaining 25% balance shall be identified as being for services associated with testing, commissioning and project close-out activities. These percentages may not be altered without the prior written consent of the Funding Agency.

f The Small GESA Contractor shall not show temporary services and/or equipment furnished at the Small GESA Contractor's cost. The Small GESA Contractor must pro-rate the cost of these items (with the exception of temporary heat) throughout the items of work, material and/or equipment to which the cost pertains.

g The Small GESA Contractor shall include a single line item for mobilization in its GSC-30, limited to include only those items listed in the General Conditions of the Small GESA Contract. The total for mobilization cost shall not exceed 1.5% of the contract award amount.

h The Small GESA Contractor shall show excavation and backfill as separate items. If hand excavation is required, it must also be separately listed. All excavation and backfill quantities shall be indicated in cubic yard units. If there is no backfill, an explanation must be provided.

i Concrete for structures is to be indicated in cubic yard units. Concrete sidewalk and concrete paving may be indicated as square yard units. All unit prices for concrete work shall include forming. Forming may not be indicated as a separate line item.

j Painting must be a separate item, listed in square feet. The Funding Agency will not accept lump sum painting costs.

k The Small GESA Contractor shall not use the terms "furnish" or "install" as part of the description of a line item. Procurement and installation costs must be included in the line item of work. The only exception shall be in cases where materials or equipment are furnished by the Funding Agency or another Commonwealth of Pennsylvania entity for the Small GESA Contractor's use in the Project.

l "Demolition" shall include, in parentheses, the specific item(s) to be demolished.

m The Small GESA Contractor shall include scaffolding costs within the item with which it is associated, not as a separate line item.

n The Small GESA Contractor may show sheet metal work as two items, i.e., (a) Sheet metal shop drawings and (b) Sheet metal fabrication and installation. Shop drawings must be shown at actual cost, as a "lump sum" item. The Small GESA Contractor shall obtain Funding Agency's approval of the shop drawings prior to Application for Release of Payment. If a subcontractor is used for shop drawings, a copy of the subcontractor's invoice must be attached to the Application for Release of Payment when the Small GESA Contractor requests payment for the shop drawings.

o When balancing of heating and ventilating systems is required by the specifications, the Small GESA Contractor shall show it as a separate item.

p Lump Sum items cannot be released for payment until the item is completely finished, inspected, and accepted by the Funding Agency.

q The Small GESA Contractor may submit a supplemental breakdown for those items listed as Lump Sum on the original approved GSC-30 at a later date, indicating quantity, unit price and extensions for all items to be furnished and installed under each Lump Sum item. Lump Sum items should be kept to a minimum. Supplemental breakdowns are not permitted for items where partial payment has been made.

r The Small GESA Contractor's initial GSC-30 must designate any work to be subcontracted by noting such in parenthesis after the scope of work, such as "Painting (subcontracted)". The line item for subcontract work may be broken into as many sub-items as necessary, including building, area or floor.

s A separate line item is required for each purchase order or subcontract issued to an SDB firm. The line item for the purchase order or subcontract may be broken into as many sub-items as necessary, including building, area or floor. The value for the purchase order or subcontract line item (or the sum of the sub-items) shall be identical to the value of the purchase order or subcontract.

t Descriptions shall be clear and concise for each item of work, material or equipment, using the same designation as the specifications. The Small GESA Contractor shall list all items (examples: concrete masonry units, conduit, pipe fittings, wire, cable, etc.) by type and size to be installed.

u The Small GESA Contractor shall list items by ECM in chronological order on the GSC-30. Additional items may be listed at the Small GESA Contractor's discretion. Alpha-numeric numbering is not permitted except in cases where supplemental breakdowns are submitted.

v The Small GESA Contractor shall list operation and maintenance manuals as one line item. The value shall be not less than 1% of the contract award amount and is subject to the approval of the Funding Agency.

w The Small GESA Contractor shall list Record Drawings (as-built dwgs.) as one line item. The value shall be at least 2% of the contract award amount.

ADMINISTRATIVE PROCEDURE #5

A. PROJECT SCHEDULE FORM GSC-35

1. The Project Schedule shall be developed using the Critical Path Method. The schedule shall be developed, prepared, and submitted in accordance with the requirements and time frames required by the General Conditions of the Small GESA Contract and the requirements of this Administrative Procedure, in addition to the following:

   a The CPM Schedule is to be created by the Small GESA Contractor the utilizing current version of Primavera.

   b The Small GESA Contractor shall complete all work in accordance with the accepted Project Schedule. The Project Schedule will reflect the decisions of the Small GESA Contractor as to sequence, duration, design and construction logic and all means and methods of construction.

   c The Project Schedule shall be reviewed at the first Design Meeting. No Application for Release of Payment beyond #1 will be approved by the Funding Agency until the Project Schedule is submitted by the Small GESA Contractor and accepted by the Funding Agency.

   d The Funding Agency will not automatically grant an extension of time due to activity time delays. Since a contract modification or delay may result in only absorbing a part of the available total float that may exist within an activity or chain of activities, the modification or delay may not affect existing critical activities or interim milestone dates or cause non-critical activities to become critical.

   e Total float is defined as the amount of time between the early start date and the late start date, or the early finish date and the late finish date, for each and every activity in the Project Schedule. Float is not for the exclusive use or benefit of either the Funding Agency or the Small GESA Contractor. The Funding Agency will consider extensions of time to interim milestone dates or the Contract Completion Date only to the extent that equitable time adjustments to the activity or activities affected by the contract modification or delay exceeds the total float of the affected or subsequent paths and extends any interim milestone date or the Contract Completion Date.

   f General Information

      i The Small GESA Contractor shall list design activities indicating Required Submissions dates and required review time.

      ii The Small GESA Contractor shall list items of construction as they will be installed, listing each ECM separately The Small GESA Contractor shall also include in its schedule submissions of shop drawings for approval, approval of shop drawings, placing of material orders, and delivery of materials.

      iii The Small GESA Contractor is responsible for assuring that any/all subcontract work as well as work performed by its own forces, is included in the schedule.

      iv The Project Schedule shall reflect Early Start/Early Finish Dates, Late Start/Late Finish Dates, and available float or slack time for each and every activity.

- v The Small GESA Contractor shall identify and incorporate construction progress milestones into the Project Schedule in accordance with the General Conditions of the Small GESA Contract. The milestones shall signify the start date or completion date of a specific activity that is critical to the completion of the project on schedule. The Small GESA Contractor must show at least one milestone in each month of the scheduled construction period.

ADMINISTRATIVE PROCEDURE #6

A. REQUEST FOR APPROVAL OF MATERIALS OR SUBCONTRACTORS FORM GSC-23

1. The Small GESA Contractor shall prepare and submit the Form GSC-23 as required by the General Conditions of the Small GESA Contract and this Administrative Procedure.

2. If the Small GESA Contractor wishes to provide an "equal," it must check the appropriate block on the Form GSC-23. The submission shall fulfill the requirements of the General Conditions of the Small GESA Contract.

3. If the Small GESA Contractor desires to provide a "substitution," it must check the appropriate block on the Form GSC-23. The submission shall fulfill the requirements of the General Conditions of the Small GESA Contract. The Small GESA Contractor must also attach a "Letter of Certification" on company letterhead in this format:

   GESA Project Location_____

   ### Certification

   I, the authorized representative of the Small GESA Contractor certify, to the best of my knowledge that, for each purchase order issued on this Project:

   a. The material and/or equipment to be supplied is accurately described in the purchase order; and
   b. The material and/or equipment to be supplied complies with the requirements of the contract documents; and
   c. The Suppliers have been notified of the payment provisions of the Prompt Payment Schedule.
   d. The Suppliers have been notified that nothing contained in the Contract Documents between the Small GESA Contractor and the Funding Agency creates any contractual relationship between the Funding Agency and any Supplier.

   I understand that by signing this document I certify that the facts contained herein are true. I further understand that this document is subject to the provisions of the Unsworn Falsification to Authorities (18 P.S. § 4904). I acknowledge that if my company does not comply with these terms, my company may be subject to suspension and/or debarment from bidding on any Commonwealth of Pennsylvania public works project for a period of three years.

4. The Small GESA Contractor shall number each submission and each page within each submission consecutively and shall give resubmissions the same number as the original submission.

5. The Small GESA Contractor shall attach a copy of the Certification for Welders and a copy of the License for Blasters to the Form GSC-23, when submitted.

6. If the Small GESA Contractor has a financial interest in a Subcontractor, Sub-subcontractor or Supplier, it must disclose its relationship to the Subcontractor, Sub-subcontractor or Supplier on the GSC-23 in the block "Relation to Small GESA Contractor" in accordance with the General Conditions of the Small GESA Contract.

7. Prior to the commencement of work by any Subcontractor, Sub-subcontractor or

Supplier, the Small GESA Contractor must submit a copy of the Subcontractor/Supplier Agreement, in accordance with the General Conditions of the Small GESA Contract to DGS field personnel (or Funding Agency if Small GESA project is administered by Funding Agency) who will retain a copy.

8. The Small GESA Contractor shall also submit a copy of every Subcontractor/Supplier Agreement or Purchase Order with a SDB to the DGS' Bureau of Diversity, Inclusion and Small Business Opportunities regardless of which agency is administering construction.

9. The Small GESA Contractor shall specifically identify the Subcontractor, Sub-subcontractor or Supplier on a separate line on the Contract Breakdown Sheet GSC-30 (if known prior to approval of the GSC-30), or on the Application for Release of Payment GSC-18 (if after approval of the GSC-30), as described more completely elsewhere in the Administrative Procedures.

10. The Small GESA Contractor shall email the GSC-23 Form to its Retained Professional, with a copy to the Funding Agency .

11. The Funding Agency shall review the copy of the GSC-23 for compliance immediately upon receipt. If any discrepancies are found, The Funding Agency shall notify the Small GESA Contractor's Retained Professional in writing.

12. It is the Small GESA Contractor's Retained Professional's responsibility to check each item for conformity with the requirements of the specifications. The Small GESA Contractor's Retained Professional will indicate on the Form GSC-23 whether each item is approved, disapproved (with the reason), or that approval is withheld, pending submission of additional qualifying material or information (catalog cuts, engineering data, test data, etc.) from the Small GESA Contractor. The Small GESA Contractor's Retained Professional's signature on the bottom of the Form GSC-23 constitutes approval, subject to final approval of sample, shop drawings or catalog data, certification, test report, or other information, when such additional information is required.

13. The Small GESA Contractor's Retained Professional will email the approved GSC-23 to the Small GESA Contractor and the Funding Agency.

ADMINISTRATIVE PROCEDURE #7

MATERIALS TESTING (ALL ITEMS-GENERAL REQUIREMENTS)

LABORATORY SAMPLE OR FIELD TEST IDENTIFICATION – FORM GSC-22/33

CONCRETE TESTING (APPROVAL OF MIX COMPUTATIONS)

CONCRETE MIX COMPUTATION - FORM GSC-26

MANUFACTURERS' HIGH VOLTAGE CABLE TEST (BIRTH CERTIFICATE)

FIELD HIGH VOLTAGE CABLE TEST

HVAC SYSTEMS BALANCING

A. Materials and Concrete Testing (General Requirements)

1. The Small GESA Contractor shall:

   a Give the Funding Agency timely notice of its readiness and of the date arranged, so the Funding Agency or its designee may observe such inspection or testing.

   b Bear all costs of inspections and tests, unless otherwise specified. All expenses incurred in the collecting, packing, and delivering of samples of materials or equipment to or from the Project site or laboratory will be paid by the Small GESA Contractor.

   c When Form GSC-22/33 (which can be downloaded from the DGS website) is used for concrete cylinders, each cylinder shall be numbered consecutively and prefaced for design mix tests, precast concrete, and pre-stressed concrete. The type of cylinder shall be noted on the form as follows:

      DM - Design Mix PC - Precast Concrete PS - Pre-stressed Concrete

      Cylinders for concrete other than these types will not be prefaced. Approved samples to be incorporated into the work shall be returned to the site by the Testing Laboratory.

2. The Small GESA Contractor's Retained Professional shall:

   a Secure from the Testing Laboratory an original and three copies of the test reports and should keep the original and email a copy to the Small GESA Contractor and the Funding Agency.

   b Any reports showing deficiencies in test results will be immediately communicated by the Small GESA Contractor's Retained Professional to the Small GESA Contractor, and to the Funding Agency.

B. Concrete Testing (Approval of Mix Computations)

1. The Small GESA Contractor (or testing laboratory) shall prepare a Form GSC-26, Concrete Mix Computation, downloaded from the DGS website for each type of design mix to be used. Forms shall be emailed to the Small GESA Contractor's

2. Retained Professional for review and approval. All information required by the form must be provided.

3. The Small GESA Contractor's Retained Professional shall review each Form GSC- 26 for compliance with the Contract Documents, and approve/disapprove as appropriate and email the form to the Funding Agency for review and distribution.

4. Upon receipt of the approved GSC-26 from the Funding Agency, the Small GESA Contractor shall instruct the testing laboratory to pick up samples for mix design testing from either the batch plant or the site. One Form GSC-22/33, Laboratory Sample or Field Test Identification, must accompany each sample to be tested. A separate form must be submitted for each test.

C. Manufacturer's High Voltage Cable Test Report (Birth Certificate)

1. The Small GESA Contractor will ensure the Cable Test Report (Birth Certificate) complies with the Contract Documents. The Small GESA Contractor shall email this report to the Small GESA Contractor's Retained Professional and copy the Funding Agency on that email.

2. The Small GESA Contractor's Retained Professional will review the report for compliance with the Contract Documents.

   a If approved, the Professional shall affix a stamp of approval directly to each copy of the report, retain a copy and email a copy of the stamped report to the Funding Agency.

   b If disapproved the report, the Professional shall return all copies to the Small GESA Contractor by email explaining the reason(s) for rejection. The Professional shall copy the Funding Agency on this email.

3. High Voltage Cable may not be installed until the Funding Agency approves the Manufacturer's Cable Test Reports.

D. High Voltage Cable Field Test Report

1. The Small GESA Contractor shall email the report to the Small GESA Contractor's Retained Professional and copy the Funding Agency on that email.

2. The Small GESA Contractor's Retained Professional shall review the Field Test Report for compliance with testing procedures and Contract Documents.

   a If approved, the Small GESA Contractor's Professional will affix its stamp of approval directly to each copy of the report, retain a copy and email a copy to the Funding Agency.

   b If disapproved the report, the Small GESA Contractor's Professional shall advise the Small GESA Contractor of the appropriate corrective action to assure compliance with the Contract Documents.

3. The Funding Agency will consider approving the release of payment for High Voltage Cable only after (a) the Manufacturer's Test Report is approved, and (b) the cable is installed, and (c) the Field Test Report is approved by the Small GESA Contractor's Professional and (d) reviewed by the Funding Agency.

E. HVAC Systems Balancing Report

1. The Small GESA Contractor shall submit an original of the HVAC Systems Balancing Report to the Small GESA Contractor's Professional or Retained Professional. The Funding Agency must be copied on the email including the attachment.

2. The Small GESA Contractor's Professional shall review the Balancing Report for compliance with balancing procedures and the Contract Documents.

   a If approved, the Small GESA Contractor's Professional shall affix its stamp of approval directly to each copy of the report and email a copy to the Funding Agency.

   b If the report is disapproved, the Small GESA Contractor's Professional shall advise the Small GESA Contractor of the appropriate corrective action to assure compliance with the Contract Documents. The Small GESA Contractor's Retained Professional must email the Funding Agency that the report has been disapproved and set forth the proposed method of correction.

   c If the Funding Agency disapproves any report or concurs with a "qualified" approval by the Small GESA Contractor's Professional, the Small GESA Contractor's Professional shall verify that the Small GESA Contractor has completed any required remedial action. The Small GESA Contractor's Professional shall notify the Funding in writing, that the Small GESA Contractor has completed the required remedial action. The Small GESA Contractor shall be responsible for the retesting and rebalancing of any and all zones affected by the corrective action. The Small GESA Contractor shall then resubmit a Balancing Report for these areas to the Small GESA Contractor's Professional.

3. Payment for test and balancing will not be made until the report(s) are approved by the Funding Agency.

ADMINISTRATIVE PROCEDURE #8

A. SUBMITTALS

1. The Small GESA Contractor's Retained Professional will review and approve all submittals in accordance with the Small GESA General Conditions by stamping with an approval stamp. Only a stamp as indicated in the sample provided in this section will be accepted.

2. The Small GESA Contractor shall make any corrections the Small GESA Contractor's Retained Professional may require and resubmit the required number of corrected copies of shop drawings or new samples until approved. The Small GESA Contractor's Retained Professional shall act on the resubmission within ten (10) days of its receipt, unless the Funding Agency approves a different period of time. The resubmission of submittals by the Small GESA Contractor and the Small GESA Contractor's Retained Professional's subsequent review shall be in accordance the General Conditions of the Small GESA Contract.

3. The Small GESA Contractor's Retained Professional shall supply one copy of the Final Shop Drawings or Catalog Data to the Small GESA Contractor, the Funding Agency.

4. The Small GESA Contractor must maintain at the Project site one copy of all Project drawings, updated daily to indicate as-built conditions.

5. Any work commenced by the Small GESA Contractor prior to final approval of the submittals is performed at the Small GESA Contractor's own risk.

6. The box below is a sample of the "Approval Stamp" to be utilized by the Small GESA Contractor's Retained Professional in the review and approval process of all submissions. **Only a stamp with the language as indicated in this sample will be accepted**.

☐ APPROVED	☐ NOT APPROVED
☐ APPROVED AS NOTED	☐ REVISE AND RESUBMIT

SIGNATURE/TITLE DATE

- A note may be added to: Advise the Small GESA Contractor that quantities have not been verified.
- Advise the Small GESA Contractor that all materials must meet the requirements of the Contract Documents

ADMINISTRATIVE PROCEDURE #9

APPLICATION FOR RELEASE OF PAYMENT

FORM GSC-16 – Prevailing Minimum Wage Certificate

FORM GSC-17 – Recap of Small GESA Contractor' Application for Release of Payment

FORM GSC-18 – Application for Release of Payment

FORM GSC-24 – Payroll Affidavit, Certificate/Statement of Surety, Power of Attorney

FORM GSC-43 – Stored Materials

A. General Information

1. The Small GESA Contractor's Applications for Release of Payment shall be prepared, submitted, and processed in accordance with the General Conditions of the Small GESA Contract and this Administrative Procedure.

2. The Funding Agency will not process an Application for Release of Payment until the Contract Breakdown Sheet, Form GSC-30, has been approved.

3. An Application for Release of Payment will not be processed without the Small Diverse Business Utilization Report (See AP 15).

4. If the Small GESA Contractor submits an incorrect Application for Release of Payment, the Funding Agency will authorize release of payment for all items which are correct and notify the Small GESA Contractor, within fifteen days of the submittal, of the deficiencies in the Application. The Funding Agency will return Applications for Release of Payment to the Small GESA Contractor only if there is missing or incomplete paperwork.

5. When the Funding Agency receives an Application for Release of Payment, the Funding Agency field personnel shall date and initial the Form GSC-17 in the upper right corner. The Funding Agency field personnel have three days from the date of receipt to review, correct, and approve the Application for Release of Payment.

6. The Small GESA Contractor will make any adjustments or changes required as a result of the Funding Agency's review on the next Application for Release of Payment submitted after receipt of the Funding Agency comments.

B. Prevailing Minimum Wage Certificate - Form GSC-16

1. The Small GESA Contractor must attach a completed Form GSC-16 to each Application for Release of Payment to certify compliance with the payment of Prevailing Minimum Wages as required by the Contract Documents.

2. The Small GESA Contractor and its subcontractors are required to submit Form LLC-25 to the Funding Agency field personnel on a weekly basis.

C. Small GESA Contractor's Application for Release of Payment - Form GSC-17

1. The Small GESA Contractor must number each application consecutively and

complete the heading information.

2. The Small GESA Contractor must check the "Final" block when requesting release of final payment of the contract amount. If the Small GESA Contractor is revising a request for release of the final payment application, the "Post Final" block must be checked.

3. The Amended Contract Amount is the Total Contract Award, plus or minus all approved change orders (debit or credit).

D. Release of Payment of Labor, Materials/Equipment Incorporated – Form GSC-18

1. The Small GESA Contractor must provide a true and correct list, according to the item number(s) on the approved GSC-30, of the Project work performed for each pay period.

2. The Small GESA Contractor shall list all items in numerical sequence, as shown on the GSC-30, and carry all items on each and every Application for Release of Payment, Form GSC-18.

3. The Small GESA Contractor shall individually list all completed debit and/or credit change order work previously approved by the Funding Agency under the heading "Executed Change Orders" on the Form GSC-18.

4. The Funding Agency may authorize payment of an approved change order on a percentage basis as the work is completed, upon the request of the Small GESA Contractor.

5. The Small GESA Contractor shall individually list all pending debit and/or credit change orders, which have received Funding Agency scope authorization under the heading "Pending Change Orders" on the Form GSC-18.

E. Stored Materials – Form GSC-43

1. The Small GESA Contractor may invoice stored materials when materials are ordered in advance and stored at the Project site pending their installation. Material scheduled for installation **in fewer than 45 days** from the date of procurement is not eligible for payment as stored material.

2. The Small GESA Contractor must submit a completed GSC-43 Form with the Application for Release of Payment.

3. Prior Funding Agency approval to store materials is not required. The signatures of the Small GESA Contractor and the Funding Agency will signify that the forms have been reviewed and are correct.

4. The Small GESA Contractor is responsible for proper storage of the materials at the Project site. Materials shall be stored off the ground and properly protected from the elements.

5. The Small GESA Contractor shall submit a separate GSC-43 Form for each Supplier.

6. The description of line items on the Small GESA Contractor's Supplier invoice should be identical to the description on the Small GESA Contractor's GSC-43 Form and the GSC-30. If an item description on the Supplier's invoice is not identical to the items on the GSC-43 and GSC-30, the Small GESA Contractor must clearly describe, either on the invoice or an attachment, how the invoiced item(s) relate to the items on the GSC-43 and GSC-30.

7. The Small GESA Contractor's Supplier invoice must also show the Unit Wholesale Price and the Extended Unit Wholesale Price. The Small GESA Contractor may add information to the Supplier's invoice for the purpose of clarity.

8. If items that are being submitted as stored material are combined with other items on a Small GESA Contractor's Supplier invoice, the claimed stored items must be clearly identified.

9. The Small GESA Contractor's requests for release of payment may not exceed 85% of the price of the item as indicated on the approved GSC-30.

10. When a Supplier's invoice lists two or more separate items that are component parts of a previously submitted single line item on the GSC-30, a "Supplemental Cost Breakdown Sheet" must be submitted and approved prior to payment for the individual items. Line items with differing unit prices must be shown as separate items on the Supplemental Cost Breakdown Sheet. Each component part must be shown as an individual item.

11. The Small GESA Contractor's completed GSC-43 Form, submitted with each Application for Release of Payment, must also have the following documents attached:

    a. Supplier's Invoice

    b. Fire and theft insurance policy rider for the materials

    c. Evidence of payment, or when payment has not been made, a letter on the Small GESA Contractor's letterhead authorizing payment to be made jointly to the Small GESA Contractor and the Supplier.

    d. Power of Attorney (from bonding company)

F. Payroll Affidavit, Small GESA Contractor's Affidavit and Statement of Surety Company. Power of Attorney-Form GSC-24

1. The Small GESA Contractor must submit a completed Form GSC-24 with its Final Application for Release of Payment. If the Small GESA Contractor does not submit Form GSC-24 with the Final Application for Release of Payment, the Funding Agency will withhold approval of the release of the sum of $500 until the form is submitted.

2. The Small GESA Contractor need not complete the Payroll Affidavit section of the form if the prevailing minimum wage scale does not apply. However, the Small GESA Contractor must make a statement on the reverse side of the Payroll Affidavit indicating that the prevailing minimum wage scale does not apply.

3. The Small GESA Contractor should retain a copy of Form GSC-24 and email an original with the Application for Release of Payment, with a copy of the Power of Attorney attached.

G. For Each Application for Release of Payment

1. Prior to the Application for Release of Payment packets being submitted to the Escrow Agent, the Funding Agency field personnel shall assemble it in the following order:

    a. Application for Release of Payment GSC-17

    b. Application for Release of Payment Labor/Material/Equipment GSC-18

    c. Prevailing Wage Certificate GSC-16

d. If applicable, Stored Materials GSC-43

   i. Power of Attorney (from bonding company)

   ii. Supplier's Invoice

   iii. Fire and theft insurance policy rider

   iv. Evidence of payment, or when payment has not been made a letter on the Small GESA Contractor's letterhead authorizing payment to be made jointly to the Small GESA Contractor and the supplier

e. GSC-24 (if Final Invoice)

2. Upon Final Inspection, the Funding Agency will adjust the retainage to reflect the actual amounts withheld as set out in the General Conditions of the Small GESA Contract. The Application for Release of Payment packet will include the pertinent pages of the Final Inspection Report, including the Funding Agency's certificate detailing the incomplete items and value, pending credit change orders, liquidated damages, claims, and other pertinent information. To receive payment, the Small GESA Contractor must have completed or settled the open items listed on the certificate. As individual paperwork items are completed, the Funding Agency may approve proportionately reduced retainage amount. The Funding Agency field personnel shall attach the pertinent pages of the Final Inspection Report to the Application for Release of Payment noting items which have been resolved and shall calculate, insert, and highlight the adjusted retained amount on each copy of the Final Inspection Report attached to the Application for Release of Payment.

ADMINISTRATIVE PROCEDURE #10

CHANGE ORDERS FORM GSC-1

A. **General Information** - Any change to the Small GESA Contract must be documented by either a Field Order or a Change Order according to the conditions for each as defined below.

1. **Field Order** - any change to the Small GESA Contract which meets both of the following criteria:

   a The Small GESA Contractor and the Funding Agency field personnel agree that the change constitutes neither a net additional nor deductible cost to the Small GESA Contract; and

   b The change consists of a minor relocation, substitution, or revision to quantity of contract items which does not constitute a significant design change and does not need to be documented by revision to Project Drawings and/or Specifications.

   c Field Orders are issued by the Funding Agency field personnel describing the full scope of the work. The Small GESA Contractor shall request a Field Order in writing to the Funding Agency.

2. **Change Order -** any change to the Small GESA Contract which does not meet both of the Field Order criteria.

   a **The Funding Agency will only issue a debit change order for unforeseen conditions and Using Agency Request. No change orders will be issued unless it is for a credit.**

      i An unforeseen condition is a site condition discovered that could not have been determined by the Small GESA Contractor during the site investigation or a condition that did not occur until after the project was awarded.

3. **Emergency situation** - If a change order condition is an emergency, it is essential that the Funding Agency issue the Change Order and authorize the Small GESA Contractor to begin work as soon as possible.

B. Step By Step Instructions - This table lists actions from beginning to end for a Change Order. All actions are to be performed chronologically.

STEP	PARTY	ACTION
1	Small GESA Contractor	Identify Unforeseen Condition.
2	Small GESA Contractor	Complete SECTION 1 of GSC-1 with cost and scope and signed by Retained Professional and Small GESA Contractor. Attach itemized cost breakdown for review and verify that costs are within remaining project contingency. Email to Funding Agency and DGS Resource & Energy Office
3	Funding Agency & DGS	Review and approve. Sign and, if needed, obtain Sec. signature. Email to Small GESA Contractor.
4	Small GESA Contractor	Perform work upon receipt of GSC-1. When done, the Small GESA Contractor invoices the final determined cost. If cost is disputed, the Small GESA Contractor may pursue a Field Dispute.

C. General Comments on processing C/O.

1. **Small GESA Contractor and Retained Professional** - The Small GESA Contractor shall describe in detail the unforeseen condition or the Using Agency Request that constitutes a change from original contract. The description should include all reference drawings, sketches, and specification sections. Small GESA Contractor must provide a detailed cost breakdown of the actual costs. The Funding Agency will consider this cost to be the final binding cost for this Change Order unless an unforeseen change in scope occurs during the performance of the Change Order work. If any new work is being requested in lieu of specified contract work, the Small GESA Contractor should clearly define both the requested (new) and the superseded (specified) work. The description should also make reference to any Energy Conservation Measure impacted by the proposed change order.

2. **Field Personnel** - The Funding Agency field personnel shall check the detailed cost breakdown and verify its accuracy. Any inaccurate information discovered in the cost breakdown that may be corrected by the Funding Agency (such as math errors, incorrect application of overhead and profit, burden, and/or bond rate adjustment) should be adjusted in lieu of returning it to the Small GESA Contractor for correction. Any missing, incomplete, or improper information that cannot be corrected should be referred back to the Small GESA Contractor for correction.

D. Change Order Breakdown

1. **Material** - The Cost Breakdown shall list, as a minimum for each material item used, the material description, the unit and the quantity. The Cost Breakdown shall then include the total of all the individual cost totals which is defined as the pre-mark-up cost total. Any freight charges for specific materials listed must be included in the unit cost for the particular material. Funding Agency will not authorize payment of any separate line items in the Cost Breakdown for such freight charges. The Small GESA Contractor may claim 5% mark-up for material.

2. **Labor** - The Cost Breakdown shall include for each labor classification listed, the number of workers, duration of work for each worker, the total labor hours, the classification description, the hourly base wage rate paid (BR), the total hourly wage rate paid (WR), the base rate individual cost (H x BR) and the wage rate individual cost (H x WR). The Cost Breakdown shall then include the total of all the individual base rate costs (TBR) and the total of all the individual wage rate costs (TWR). The hourly base wage rate (BR) is defined as the rate of wages paid by the employer directly to the employee. The total hourly wage rate (WR) is defined as the total rate of wages paid by the employer including wages paid directly to the employee (BR) plus any employer participation or contribution to employee benefits paid on behalf of the employee. The Small GESA Contractor may claim 5% mark-up for labor. The Funding Agency will not authorize reimbursement of line items in the Small GESA Contractor's or Subcontractor's Cost Breakdown for items such as travel, lodging and per-diem.

3. **Equipment** - The Cost Breakdown shall include for each piece of equipment used to perform the work, the description of the piece of equipment used, the quantity of that particular piece used, the duration the piece of equipment was used, the rental rate for the duration used and the total rental cost. The Funding Agency expects the Small GESA Contractor to procure/provide the most economical rental rate available over the duration of the work performed. For example, if the piece of equipment was used over a four-week period, Small GESA may only use a monthly rate not a daily or weekly rate if the monthly rate is more economical than the other two rates. The Funding Agency will not authorize payment of equipment costs for any piece of equipment not specifically identified, or for any tools such as hand tools used in the everyday performance of contract work. The Small GESA Contractor may claim sales tax paid for any piece of equipment rented from an outside (non-Small GESA Contractor owned) rental agency provided that a receipt showing the sales tax paid amount accompanies the cost breakdown. The Funding Agency will disallow sales tax for any rental item without such proper verification. The

Small GESA Contractor may claim mark-up for overhead, general support and profit equal to 5% times the sum of the total rental costs plus the total applicable sales tax. The total rental costs are the sum of all the individual rental costs. The total applicable sales tax is the sum of all the individual verified sales taxes.

4. **Subcontractors** – A detailed cost breakdown from the Subcontractor is required from the Small GESA Contractor showing any Change Order work being performed by a Subcontractor. Include any costs for the Small GESA Contractor's Retained Professional as subcontract work. For those breakdowns containing work performed by one or more Subcontractors, the Small GESA Contractor is responsible for clarifying somewhere in the breakdown, the exact scope of work being performed by each Subcontractor. The Small GESA Contractor may claim mark-up for overhead, general support and profit equal to 5% times the sum of the total costs realized by the Small GESA Contractor's Subcontractor in performance of the work.

5. **Summary** - At the end of the detailed cost breakdown, the Small GESA Contractor shall list individually the total costs of material, labor, equipment, sub-contracts and deductions. The Small GESA Contractor shall then apply the adjustment to contract bond which is equal to the Small GESA Contractor's bond rate times the Change Order cost subtotal. The Funding Agency considers the appropriate bond adjustment rate to be equal to the percentage rate used by the Small GESA Contractor to establish the contract bond amount shown on the Small GESA Contractor's original cost breakdown GSC-30 previously approved by the Funding Agency.

6. **Change Order Approval Letter** (see example format provided in this manual section) will be issued to the Small GESA Contractor by the Funding Agency upon review and approval of every Change Order. This letter authorizes the Small GESA Contractor to perform the subject work, and upon completion of work, invoice for that work in a cost amount equal to the final determined cost which has been agreed to by the Small GESA Contractor and Funding Agency.

7. **Disputed Change Order** - A Disputed Change Order Approval Letter may be issued to the Small GESA Contractor by the Funding Agency on any Change Order which contains a Small GESA Contractor's cost proposal being disputed by the Funding Agency. The letter authorizes the Small GESA Contractor to perform the work, and upon completion of work, invoice for that work in a cost amount equal to the final cost as determined by the Funding Agency and in conflict with the Small GESA Contractor's proposed cost. The letter will establish the Funding Agency's determined cost and the Small GESA Contractors rejected proposed cost. If the Small GESA Contractor disputed the Funding Agency's cost, additional compensation may be pursued after completion of the Change Order work by pursuing a Field Dispute Resolution.

Small GESA Contractor: _____ **GESA CHANGE ORDER** _ Project: G –
Agency: _____
Locale: _____

CHANGE ORDER #: _____

SECTION 1 Small GESA Contractor's Retained Professional's Scope of Work (Complete and email to DGS)

The description of this construction change (including reference to drawings/sketches to define scope) is as follows:

Small GESA Contractor agrees to furnish and or delete labor and materials in order to complete the construction included within the scope of this Change Order to contract plans and specifications for the net ___ additional ___ deductible cost amount of :$ _____ in accordance with the attached cost breakdown. Small GESA Contractor further agrees that the completion date for construction as contained in the contract shall not be changed by approval of this Change Order without the submission of a request for an extension of time.

Small GESA Contractor Retained Professional Signature:

_____ **Date** _____

Small GESA Contractor Signature: **Date** _____

SECTION 2-RECOMMENDATION OF THE FUNDING AGENCY

☐ Small GESA Contractor's breakdown costs have been checked and are recommended.

☐ Small GESA Contractor's breakdown costs are not recommended. Region recommends cost of $_____. I have enclosed a separate breakdown.

Approval of this Change Order is ☐ is not ☐ recommended.

Funding Agency Signature: _____ **Date** _____

EXAMPLE COMPLETED COST

BREAKDOWN Small GESA CONTRACTOR'S NAME

MATERIAL

QTY. (Q)	UNIT (U)	DESCRIPTION	UNIT COST (MU)	COST TOTAL (Q x MU)	LABOR HOURS (OPTIONAL) HOURS/UNIT (HU)	TOTAL HOURS (Q x HU)
8000	S.F.	1/2" GYPSUM WALL BOARD	$0.15	$1,200.00	.008	64
15	EACH	DOUBLE HUNG WINDOWS	$120.00	$1,800.00	.800	12
		PRE-MARK-UP MAT'L. COST TOTAL		$3,000.00	TOTAL LABOR HRS.	76
		6% SALES TAX		$180.00		
		SUBTOTAL		$3,180.00		
		10% OVERHEAD, GEN. SUPT. & PROFIT(ON SUBTOTAL)		$318.00		
		TOTAL MATERIAL COST		$3,498.00		

LABOR

NUMBER OF WORKERS	DURATION	HOURS (H)	CLASSIFICATION	HOURLY BASE RATE (BR)	TOTAL HOURLY WAGE RATE (WR)	BASE RATE COSTS (H x BR)	WAGE RATE COST (H x WR)
2	38	76	CARPENTER	$20.27	$30.59	$1,540.52	$2,324.84
TOTAL LABOR HOURS		76		TOTAL BASE RATE COST (TBR)		$1,540.52	
					TOTAL WAGE RATE COST (TWR)		$2,324.84

RATE	MANDATED BURDEN		
7.65%	SOCIAL SECURITY (ON TOTAL TBR)	$117.85	
12.39%	UNEMPLOYMENT TAXES (ON TOTAL TBR)	$190.87	
8.90%	WORKMEN'S COMP. INS. (ON TOTAL TBR)	$137.11	
2.46%	PUBLIC LIABILITY INS. (ON TOTAL TBR)	$37.90	
	TOTAL MANDATED BURDEN (TMB)	$483.73	$483.73
	SUBTOTAL LABOR COSTS (TWR + TMB)		$2,808.57
	15% OVERHEAD, GEN. SUPT. & PROFIT(ON SUBTOTAL)		$421.29
	TOTAL LABOR COST		$3,229.86

EQUIPMENT

DURATION	QTY.	EQUIPMENT	RENTAL RATE FOR DURATION	RENTAL COST
N/A	1	N/A	N/A	N/A
			% SALES TAX (IF RENTED)	
			SUBTOTAL EQUIPMENT COST	
			10% OVERHEAD, GEN. SUPT. & PROFIT(ON SUBTOTAL)	
			TOTAL EQUIPMENT COST	$0

SUBCONTRACTORS (IF APPLICABLE)

COMPANY	*Total Cost From Attached Subcontractor's Detailed Breakdown	*TOTAL COST
XYZ Paving		$31,973.26
	SUBTOTAL	$31,973.26
	10% OVERHEAD, GEN. SUPT. & PROFIT(ON SUBTOTAL)	$3,197.33
	TOTAL SUBCONTRACTS	$35,170.59

SUMMARY

TOTAL MATERIAL	$3,498.00
TOTAL LABOR	$3,229.86
TOTAL EQUIPMENT	N/A
TOTAL SUBCONTRACTS	$35,170.59
LESS DEDUCTS (Explain Separately)	N/A
SUBTOTAL	$41,898.45
2.0% BOND COST ADJUSTMENT(ON SUBTOTAL)	$837.97
TOTAL PROPOSAL	$42,736.42

Small GESA Contractor's Signature

CHANGE ORDER APPROVAL LETTER

Date: _____

Small GESA Contractor Name
Small GESA Contractor Address

Re: Change Order No._____
Project G - _____
Title_____
Location_____

Gentlemen:

The Department of_____has issued the subject Change Order to your firm in the approved debit/credit amount of $_____to perform the following work scope:

This letter serves as the formal authorization and approval to perform the subject work and invoice for payment upon completion of the work. Enclosed is a copy of the approved Form GSC-1.

Sincerely.

Funding Agency

cc: Energy Engineer Funding Agency

DISPUTED CHANGE ORDER APPROVAL LETTER (EXAMPLE FORMAT)

Date: _____

Small GESA Contractor Name
Small GESA Contractor Address

Re: Change Order No._____
Project G -_____
Title_____
Location_____

Gentlemen:

The Department of_____has issued the subject Change Order to your firm in the approved debit/credit amount of $_____to perform the following work scope:

The Funding Agency determined that your original cost breakdown amount of $_____is too high. The discrepancy in cost is due to_____.

This letter serves as the formal authorization and approval to perform the subject work and invoice for payment upon completion of the work. Enclosed is a copy of the approved Form GSC-1.

If you disagree with this assessment and feel that the work involved is worth more than $_____, you may pursue a claim through the Field Dispute Review process.

Sincerely,

Funding Agency

cc: Funding Agency Energy Engineer

ADMINISTRATIVE PROCEDURE #11

REQUEST FOR EXTENSION OF TIME

FORM GSC-5

A. General Information

1. All Requests for an Extension of Time shall be prepared and processed by the Small GESA Contractor and the Funding Agency in accordance with the General Conditions of the Small GESA Contract, and this Administrative Procedure.

2. The Small GESA Contractor may download the GSC-5 from DGS' website.

3. The Small GESA Contractor must verbally inform the Funding Agency at the first Job Conference after any alleged delay it has encountered. No forms or correspondence are required at this time, however, the Small GESA Contractor should verify that the verbal notification of the alleged delay has been noted in the Job Conference Report. Within ten (10) days after the end of the alleged delay, the Small GESA Contractor must submit the Form GSC-5 to the Funding Agency. Failure to submit the form within ten days may result in the denial of the request.

4. The front of the form is for the Small GESA Contractor's use. The Small GESA Contractor must enter all required information and answer all questions to the best of its ability. Omission of data or failure to answer any of the questions will result in the form being returned to the Small GESA Contractor for completion. The Small GESA Contractor or its authorized representative is required to sign the Form GSC-5 in attestation of the submitted facts.

    a The Request Number will be assigned by the Funding Agency. A request number will not be assigned until a properly completed form is received.

    b Only one delay shall be submitted on a GSC-5 Form; multiple delays must be submitted on separate forms.

    c If the explanation of the delay is lengthy and/or the Small GESA Contractor wishes to attach additional documentation, it is permissible to indicate "see attached" in any appropriate area of the form. It is mandatory, however, that as much of a factual synopsis as possible be included on the form itself.

5. Claims for weather-related delays must be substantiated by Weather Data, which may be secured from local weather records and/or the National Oceanic & Atmospheric Administration, National Climatic Center, Asheville, North Carolina 28801.

6. The Small GESA Contractor should keep one copy of the form and email a signed copy to the Funding Agency.

7. The Funding Agency will review the form to ensure the provided the required information is provided and the form is signed.

    a If the information is incomplete, the Funding Agency will return the original form, with an appropriate explanation, to the Small GESA Contractor for correction and resubmission.

    b If the GSC-5 is in order, the Funding Agency will assign a sequential number, enter the received date, enter the acknowledged date and email a copy to the Small GESA Contractor.

8. Within five days of receipt, the Funding Agency shall review the extension request, Small GESA Contractor's supporting documentation, field documentation and all other sources of information required for evaluation by the Funding. The Funding Agency's recommendation shall be incorporated into the form in the appropriate area. Additional sheets may be attached as required. The Funding Agency shall also attach all pertinent information and documentation required to justify and support the recommendation. The form shall then be signed and dated by the Funding Agency. A complete copy of the GSC-5 Form and all supporting documentation should be retained by the Funding Agency.

9. The Funding Agency's recommendation will be emailed to the Deputy Secretary for the Funding Agency. The Deputy will review the packet and email a letter to the Small GESA Contractor, copy to Funding Agency personnel with the determination.

ADMINISTRATIVE PROCEDURE #12

SUBMISSION GUIDELINES FOR

STEEL CERTIFICATIONS PURSUANT TO THE

STEEL PRODUCTS PROCUREMENT ACT

73 P.S. §1881, et. seq. as amended

A. GENERAL INFORMATION CONCERNING THE STEEL PRODUCTS PROCUREMENT ACT AND STEEL CERTIFICATIONS

1. The Small GESA Contractor shall download the forms from the DGS website and submit the appropriate form to the Funding Agency assigned to the Project. Only one fully-executed certification form for each product must be submitted.

2. According to Section 1886 of the Steel Products Procurement Act (the Act), cast iron products are considered to be steel products. The appropriate certification form, therefore, is required to be submitted for cast iron products.

3. The North American Free Trade Agreement (NAFTA) does not supersede or preempt the Act.

4. Aluminum and brass products are not steel products; therefore, steel certification forms are not required for such items.

5. Pursuant to Section 1884(b)(2) of the Act, DGS has created a list of exempt machinery and equipment steel products, which is posted on the DGS website at www.dgs.state.pa.us If a product to be utilized on the project appears on the exemption list, steel certification forms are not required.

6. Modification or alteration of the Steel Certification forms is strictly prohibited. However, where the term "DGS" is written, it shall mean "Funding Agency."

7. If the entity executing an ST form has a corporate seal, that seal should be impressed in the signature area of the form. The signatures on the ST forms do not have to be notarized, but they must be original signatures. Signature stamps are not acceptable; a form submitted with such a stamp will be rejected.

8. Questions regarding steel certification submissions and/or compliance with the Act shall be submitted in writing to the Funding Agency as soon as possible after the Initial Job Conference. The Funding Agency will investigate and render a written response in a timely fashion.

9. **Nothing in this Administrative Procedure should be construed as relieving the Small GESA Contractor, Subcontractor, supplier or fabricator from complying with the requirements of the Act. Steel Certification forms must be submitted and approved before a steel product arrives on site. If the Small GESA Contractor enters into a purchase order for a "steel product" prior to submitting acceptable steel certification, the Small GESA Contractor does so at its own risk and faces penalties which include, but are not limited to, nonpayment, and/or replacement costs, and/or debarment. If steel products are incorporated into the Project prior to the submission of proper certification, the Small GESA Contractor assumes the full risk of nonpayment, replacement costs and/or debarment if the products are not certifiable.**

10. No Application for Release of Payment containing steel products will be processed until the appropriate steel certification form(s) has been approved by the Funding Agency.

11. **Domestic availability will be determined as of the date the ST-4 form is submitted for approval.**

12. The forms that follow ST-1 through ST-4 have been developed by the DGS of General Services for use on the GESA projects. The DGS assumes no responsibility or liability for any use of these forms on the public works projects of any other entity subject to the Act.

ST-1

This form must be filled out for each "steel product" on a project unless otherwise noted.

SECTION A

Line #1 This is the Small GESA Contractor's formal business name. If a sub's name appears on this form, the form must be rejected and resubmitted.

Line #2 This is the Small GESA Contractor's business address.

Line #3 This is the Small GESA Contractor's business phone number.

Line #4 This is the date the ST form is submitted to the Funding Agency.

Line #5 This is the contract number for the Project.

Line #6 This is the Project description.

Line #7 This is the "steel product" being certified, such as an I-beam, angle, bolt, channel, etc. The Small GESA Contractor may not fill in the line with a description like "structural steel", "heating unit" or "air conditioning system".

LINE #7 IS THE MOST CRITICAL PART OF THE FORM.
FAILURE TO PROPERLY FILL OUT LINE #7 MAKES THE ENTIRE FORM INVALID AND A NEW FORM MUST BE SUBMITTED.

NOTE: The Small GESA Contractor does not have to submit a form for each **piece** of steel which is being put into the Project. The Small GESA Contractor only has to submit an ST form for each **type** of steel product. For example, if the Project needs 56 I-Beams of varying lengths, the Small GESA Contractor must submit **1 ST form** for "steel I-Beams" with a listing of the various sizes covered by that ST form. The Small GESA Contractor **does not** submit 56 ST-1 forms. If, on the other hand, only 30 of the I-Beams are identifiable (stamped) structural steel, the Small GESA Contractor submits an ST-1 form with Section B(1) marked off. The other 26 I-Beams are non-identifiable structural steel, so the Small GESA Contractor must also submit an ST-1 with Section B(2) marked off and attach the appropriate supporting documentation.

If different suppliers are used, each supplier must submit the appropriate steel form.

Line #8 - This refers to the corresponding GSC-23 submittal number.

Line #9 - This is the fabricator or supplier of the product listed on Line #7.

SECTION B **ONLY ONE OF THESE ITEMS CAN BE CHECKED AS APPLICABLE**

_____ **1. Identifiable Steel Product**

This type of steel product is limited to products which are stamped "made in the USA" or otherwise identifiable as U.S. steel.

a) Supporting documentation: Small GESA Contractor only needs to submit the ST-1 form. Field personnel will verify the markings when product arrives on-site.

_____ **2. Non-identifiable Structural Steel Product**

This type of steel product is limited to items of structural steel which are not marked as made in USA.

a) Supporting documentation: Small GESA Contractor must also submit, attached to the ST-1 form, bills of lading, invoices and mill certificates.

3. Non-identifiable, Non-structural Steel Product

This type of steel product is every product which is non-structural steel, including, but not limited to, doors, doorframes, windows, machinery and equipment.

a) supporting documentation: Fully executed ST-2

b) NOTE: A steel product may not appear on any Application for Release of Payment until such time as the ST-1 and ST-2 are accepted by the Funding Agency.

SECTION C

1. Language - **No modifications, cross-outs or alterations of any type may be made to the language of this certification paragraph**.

2. Signature - Two signatures are required on the ST-1 form. The Small GESA Contractor's President/Vice President must sign on one line **and** the Secretary or Treasurer must sign as a witness. The names should be typed or printed beneath the signature lines. Failure to type in the names **does not** invalidate the ST form.

ST-2

This form must be filled out for non-identifiable, non-structural steel products.

SECTION A **To be filled out by the Purchaser, the firm that pays the Fabricator.**

Line #1 This is the name of the firm that is dealing directly with the Fabricator.

Line #2 This is the purchaser's mailing address.

Line #3 This is the purchaser's business phone.

Line #4 This is the date the ST-2 form is sent to the fabricator.

Line #5 This is the contract number for the Project.

Line #6 This is the Project description.

Line #7 **This is the "steel product" being certified, such as a chiller, condenser, hollow metal doors. The Small GESA Contractor may not fill in the line with a description like "structural steel", "heating unit" or "air conditioning unit". The model number, if any, of the steel product must be listed as indicated.**

LINE #7 IS THE MOST CRITICAL PART OF THE FORM.
FAILURE TO PROPERLY FILL OUT LINE #7 MAKES THE ENTIRE FORM INVALID AND A NEW FORM MUST BESUBMITTED.

Line #8 This refers to the corresponding GSC-23 submittal number.

SECTION B **To be filled out by the Fabricator, the firm that assembles the product listed on Line #7.**

Line #9 This is the Fabricator's name.

Line #10 This is the Fabricator's mailing address.

Line #11 This is the Fabricator's business phone.

Line #12 This is the date the Fabricator receives the ST-2 from the Purchaser.

Line #13 This is the Fabricator's Federal I.D. number.

SECTION C

1. Language - **No modifications, cross-outs or alterations of any type may be made to the language of this certification paragraph.**

2. Signature - Two signatures are required on the ST-2 form. The Small GESA Contractor's President/Vice President must sign on one line and the Secretary or Treasurer must sign as a witness. The names should be typed or printed beneath the signature lines. Failure to type in the names **does not** invalidate the ST form.

ST-3

2-STEP ELIGIBILITY ANALYSIS:

**BEFORE A Small GESA Contractor CAN SUBMIT AN ST-3,
THE FOLLOWING ANALYSIS MUST BE SATISFIED:**

STEP #1: The Small GESA Contractor must establish that the "product" **contains BOTH:**

• Steel melted in the USA

AND

• Foreign Steel

Note: Step #1 focuses upon the **content** of the "product".

Note: The % need not be close; it can be 99-1, so long as there is **both** foreign and domestic steel in the "product".

STEP #2: The Small GESA Contractor must establish that 75% of the **cost** of the "product" has been mined, produced or manufactured in the USA.

Note: Step #2 focuses upon the **cost** of the entire "product", not just the steel in it.

SECTION A

Line #1 This is the Small GESA Contractor's name.

Line #2 This is the Small GESA Contractor's business address.

Line #3 This is the Small GESA Contractor's phone number.
Line #4 This is the date the ST-3 is submitted to the fabricator.

Line #5 This is the contract number for the Project.

Line #6 This is the Project description.

Line #7 This is the "steel product" being certified, such as a chiller, condenser, hollow metal doors. The Small GESA Contractor may not fill in the line with a description like "structural steel", "heating unit" or "air conditioning unit". The model number, if any, of the steel product must be listed as indicated.

**LINE #7 IS THE MOST CRITICAL PART OF THE FORM.
FAILURE TO PROPERLY FILL OUT LINE #7 ON EACH ST FORM
MAKES THE ENTIRE FORM INVALID AND A NEW FORM MUST BE
SUBMITTED.**

Line #8 This refers to the corresponding GSC-23 submittal number.

SECTION B **To be filled out by the Fabricator/Manufacturer, the firm that fabricates the product listed on Line #7.**

Line #9 This is the Fabricator's name.

Line #10 This is the Fabricator's business address.

Line #11 This is the Fabricator's business phone.

Line #12 This is the date the Fabricator receives the ST-3 from the purchaser.

Line #13 This is the Fabricator's Federal I.D. number.

Line #14 The Fabricator must insert the percentage of the cost of the articles, materials and supplies mined, produced or manufactured in the U.S. for the product listed on Line #7.

SECTION C

1. Language - **No modifications, cross-outs or alterations of any type may be made to the language of this certification paragraph.**

2. Signature - Two signatures are required on the ST-3 form. The Fabricator's President/Vice President must sign on one line **and** the Secretary or Treasurer must sign as a witness. The names should be typed or printed beneath the signature lines. Failure to type in the names **does not** invalidate the ST form.

NOTES on ST-3 Forms:

- It is not necessary to submit an ST-1 with the ST-3.
- **The Funding reserves the right to request additional documentation to support the percentage specified on Line 14. If the Fabricator/manufacturer refuses to produce such documentation and/or Funding Agency deems it to be in the Commonwealth's best interests, the Funding Agency may request the Office of Inspector General to investigate the submission of the ST-3 form.**

ST-4

This form may be submitted in circumstances where the Small GESA Contractor believes that the "product" on Line #7 is not made in sufficient quantities to satisfy the requirements of the contract.

The information submitted by a Small GESA Contractor is subject to verification by the Funding Agency. Any Small GESA Contractor who executes a Purchase Order or other type of purchase agreement encompassing a "steel product" prior to receiving the Funding Agency's written determination that the "steel product" listed on Line #7 of the ST-4 form is not manufactured in sufficient quantity to meet the requirements of the Project does so at its own risk and faces penalties including, but not limited to, non-payment for the product; removal and replacement of the product at its own costs; and/or an Office of Inspector General investigation which may lead to debarment.

☞ **Domestic availability will be determined as of the date the ST-4 form is submitted to the Funding Agency for approval.**

Line #1 This is the Small GESA Contractor's formal business name.

Line #2 This is the Small GESA Contractor's business address.

Line #3 This is the Small GESA Contractor's business phone.

Line #4 This is the date the ST-4 form is submitted to DGS.

Line #5 This is the contract number for the Project.

Line #6 This is the Project description.

Line #7 This is the "steel product" being certified, such as a chiller, condenser, hollow metal doors. The Small GESA Contractor may not fill in the line with a description like "structural steel", "heating unit" or "air conditioning unit".

**LINE #7 IS THE MOST CRITICAL PART OF THE FORM.
FAILURE TO PROPERLY FILL OUT LINE #7 ON EACH ST FORM
MAKES THE ENTIRE FORM INVALID AND A NEW FORM MUST BE
SUBMITTED FOR APPROVAL.**

Line #8 This refers to the corresponding GSC-23 submittal number.

Line #9 These four lines, (a) through (d), are to be filled out completely by the Small GESA Contractor. At least four suppliers/manufacturers must be contacted by the Small GESA Contractor to ascertain if the "product" on Line #7 is manufactured with domestic steel.

CERTIFICATION

1. Language - **No modifications, cross-outs or alterations of any type may be made to the language of this certification paragraph.**

2. Signature - Two signatures are required on the ST-4 form. The Small GESA Contractor's President/Vice President must sign on one line **and** the Secretary or Treasurer must sign as a witness. The names should be typed or printed beneath the signature lines. Failure to type in the names **does not** invalidate the ST form.

NOTE ON ST-4 FORMS: It is not necessary to submit an ST-1 form with an ST-4 form.

ADMINISTRATIVE PROCEDURE #13

OCCUPANCY/UTILIZATION INSPECTION

FORM GSC-46 Certificate of Occupancy/Final Completion Inspection

FORM GSC-47 Certificate of Final Completions and Release of Final Payment

A. Occupancy/Utilization Inspection

1. The Funding Agency may use or permit the Funding Agency to use or occupy any completed or partially completed portion(s) of the work in accordance with the General Conditions of the Small GESA Contract and this Administrative Procedure.

2. The Funding Agency will establish the date and time for an Occupancy/Utilization Inspection and will invite the following:

   a Energy Engineer, optional
   b Energy Coordinator, optional
   c Small GESA Contractor
   d Small GESA Contractor's Retained Professional
   e Funding Agency personnel

3. The inspection will be conducted to evaluate the area(s) to be occupied or equipment to be utilized for conformity to the Contract Documents. The use and/or occupancy of the work does not constitute acceptance of any portion so taken or used. The Occupancy/Utilization Inspection must be attended by the Small GESA Contractor's Retained Professional, the Small GESA Contractor and a representative of the Funding Agency.

4. The Small GESA Contractor's Retained Professional shall conduct the inspection, unless another party is designated by the Funding. A report of the Occupancy/Utilization Inspection shall be prepared and emailed to attendees by the Construction Regional Director within five work days of the inspection. The Report shall include the following information:

   a Project Number
   b Name of Facility
   c Project Description
   d Area(s) and/or equipment to be occupied/utilized
   e Attendees along with their respective title and organization
   f The responsibilities of the Small GESA Contractor for maintenance, heat and utilities
   g A list of all items remaining to be completed or corrected in the area(s) to be occupied or equipment to be used
   h Form GSC-46, "Certificate of Occupancy/Utilization"

B. Form GSC-46, "Certificate of Occupancy/Utilization"

1. The Small GESA Contractor may download Form GSC-46 from DGS' website. The form must be prepared by the Small GESA Contractor's Retained Professional and emailed to the Funding Agency.

2. At the conclusion of the Occupancy/Utilization Inspection, the attendees shall review the responsibilities of the Small GESA Contractor for maintenance, heat and utilities, the remaining items to be completed or corrected and shall sign Form GSC-46 to indicate their concurrence with the items.

3. The work list, prepared by the Small GESA Contractor's Retained Professional, shall be appended directly to the Form GSC-46, additional sheets may be attached as required. The work list shall indicate, in detail, all items requiring completion or correction. The failure to include an item on the work list will not relieve the Small GESA Contractor of its responsibility to complete all work in accordance with the Contract Documents.

4. The Funding Agency shall, within five working days after receipt, review the Certificate of Occupancy/Utilization for completeness. If properly completed, the Funding Agency shall sign, date and email the Form GSC-46, with any attachments, in accordance with Administrative Procedure #1.

5. The Funding Agency shall not be permitted to occupy nor utilize any portion of the work until a fully executed copy of the Form GSC-46 has been received from the Funding Agency.

6. The date of the fully executed Form GSC-46 shall be the start date of any warranties or guarantees associated with the occupied area(s) or utilized equipment.

7. Any damage subsequent to the inspection due solely to the use and/or occupancy of the completed or partially completed portion of the work shall not be the responsibility of the Small GESA Contractor.

C. Final Completion Inspection

1. The Final Inspection shall be requested and conducted in accordance with the General Conditions of the Small GESA Contract and this Administrative Procedure. The Small GESA Contractor's request for a Final Inspection must be emailed to the Funding Agency.

2. Within thirty days of receipt of the request, the Funding shall establish a date and time for the Final Completion Inspection and will notify the following:

   a DGS Energy Engineer
   b Small GESA Contractor
   c Small GESA Contractor's Retained Professional
   d Funding Agency personnel

3. The Final Inspection must be attended by the Funding Agency, the Small GESA Contractor's Retained Professional, the Small GESA Contractor and a representative of the Funding Agency.

4. At the Final Inspection, the Small GESA Contractor shall submit a final Application for Release of Payment to the Funding Agency.

   a Line numbers 9, 10, 12 and 14 of the Form GSC-17, "Recapitulation of Small GESA Contractor Application for Release of Payment," should not be completed until the conclusion of the Final Inspection and all items requiring funds to be retained, as provided in the General Conditions of the Small GESA Contract have been determined. At that time, the Small GESA Contractor and the Funding Agency shall review the total amount to be retained, if any, and complete the applicable portions of the Form GSC-17. The Funding Agency shall then prepare and submit the final Application for Release of Payment to the Fiscal Division.

5. The Funding Agency shall conduct the Final Inspection. The inspection shall include all aspects of the Contract(s), including any areas or equipment previously occupied or

utilized by the Funding Agency. If the work is "substantially complete", in accordance with the General Conditions of the Small GESA Contract, a report of the Final Inspection shall be prepared and distributed in accordance with Administrative Procedure #1, by the Funding Agency within five work days of the inspection, and shall include the following information:

a Project Number and Contract Number(s)

b Name of Facility

c Project Description

d Project Location

e Attendees along with their respective title and organization

f A detailed list of all remaining work to be completed or corrected with a reasonable cost to complete each item and a statement that all items shall be completed within thirty days from the date of Final Inspection

g The status of any pending change orders and the status of the associated work

h The status of payment of approved change orders to include CO#, approval date, debit/credit and amount to be released for payment.

i The status of claims, if any, to include the request date and position within the Funding Agency

j The status of Requests for Extension of Time, if any, to include request date, number and position within the Funding Agency

k Liquidated damages, if any, to include the number of days overrun, amount per day and total amount to be withheld

l Recapitulation of retained amounts to include the following:

i Punch List Items, plus one and one-half times the aggregate value of the items
ii Credit Change Orders
iii Pending Claims
iv Liquidated Damages

m The status of SDB Commitments

n The status of Bonds, Guarantees, Warranties, Tests and Instructions still required, to include page and paragraph of the specifications

o The status of the as-built drawings

p The status of Small GESA Contractor's papers, Form GSC-24 ($500.00 shall be retained until properly submitted)

q General comments, if any

r Statement regarding the start date of all warranties and guarantees

s Statement that the Contract has been completed in accordance with the plans and specifications

t Statement that the Small GESA Contractor shall continue insurance coverage pending written permission to terminate by the Funding Agency

u Statement that the Report as written shall be deemed acceptable to all parties in receipt, unless written notification of objections is received by the Funding Agency within seven days of receipt of the Final Inspection Report

v Form GSC-47, "Certificate of Final Completion and Final Payment"

6. If through the course of the inspection, it is determined by the Small GESA Contractor's Retained Professional that the work is not "substantially complete", in accordance with the General Conditions of the Small GESA Contract, the Small GESA Contractor's Retained Professional shall not issue the Certificate of Final Completion and Final Payment.

D. Form GSC-47, "Certificate of Final Completion and Final Payment"

1. The Small GESA Contractor's Retained Professional shall download a copy of the Form GSC-47. The form must be prepared by the Small GESA Contractor's Retained Professional, signed and emailed to the Funding Agency.

2. At the conclusion of the Final Inspection, the attendees shall review all of the remaining responsibilities of the Small GESA Contractor, the remaining responsibilities of the Small GESA Contractor's Retained Professional, the status of all pending change orders, the status of all pending Requests for Extension of Time, the status of any pending claims against the Funding Agency and any other obligations of any party necessary to fulfill the requirements of the Contract Documents. Upon completion of this review the Small GESA Contractor, Small GESA Contractor's Retained Professional and the Funding Agency shall affix their signatures to the Form GSC-47, Certificate of Final Completion to indicate their concurrence with the remaining responsibilities of each party.

3. The Final Punch List, prepared by the Small GESA Contractor's Retained Professional shall be appended directly to the Form GSC-47; additional sheets may be attached as required. The punch list shall indicate, in detail, all items requiring completion or correction and a reasonable cost of completion plus one and one-half times the aggregate value of the items.

4. The Funding Agency shall, within five working days after receipt, review the Certificate of Final Completion and Final Payment for completeness and attach the Form GSC-47 to the Final Inspection Report.

ADMINISTRATIVE PROCEDURE #14

FIELD DISPUTE RESOLUTION

A. General Information on Dispute Process

1. The Dispute Process is set forth in detail in the Disputes Article of the General Conditions.

2. The Small GESA Contractor may download the Field Dispute Resolution form from the DGS website.

ADMINISTRATIVE PROCEDURE #15

SMALL DIVERSE BUSINESS PARTICIPATION

A. General Information:

1. The Small GESA Contractor must meet or exceed the participation percentages provided in the Small Diverse Business Submittal for Minority Business Enterprises (MBE), Women Business Enterprises (WBE), Veteran Business Enterprises (VBEs), and Service-Disabled Veteran Business Enterprises (SDVBEs) (together referred to hereinafter as Small Diverse Businesses) on the Project as follows:

2. The participation level for each ECM shall apply to the total ECM value.

3. The Small Diverse Business participation may include all tiers of design and/or construction.

B. Small GESA Contractor's Duty

1. The participation percentage for each ECM provided in the Small Diverse Business Submittal is to be maintained throughout the term of the Contract and shall apply to the ECM value.

2. The Small GESA Contractor shall submit a Small Diverse Business Utilization Report with each Application for Payment (See section C below).

3. The Small GESA Contractor has until the date of the Final Inspection to meet or exceed the participation percentage for the ECM. This will be tracked through the Small Diverse Business Utilization Report.

C. Small Diverse Business Utilization Report

1. This report must be submitted with each Application for Release of Payment.

2. Starting with either the first full month after the Orientation Meeting or the first Application for Release of Payment (whichever is earlier), the Small GESA Contractor must submit a Small Diverse Business Utilization Report. Thereafter, an updated Small Diverse Business Utilization Report shall be submitted with each Application for Release of Payment.

3. Each Small Diverse Business Utilization Report must have current data (totals to date) identifying at least each element as follows:

   a Detailed information including, but not limited to, any subcontracts and purchase orders documenting the dollar value commitments to Small Diverse Business firms to be used toward the satisfaction of the ECM participation percentages provided in the Small Diverse Business Submittal. All Small Diverse Businesses identified on the Utilization Report shall be retained on the Utilization Report throughout the duration of the Project.

b Detailed information regarding any work that is claimed to be self- performed by the GESA Contractor and therefore allegedly not eligible for subcontracting to a Small Diverse Business.

c Construction Subcontracts and Purchase Orders:

i All Subcontract/Purchase Orders awarded to date are $_____

ii Commitment total to Small Diverse Businesses to date:

iii $ _____

iv % _____

v For each subcontract and purchase order awarded since the previous Application for Release of Payment the:

- Identity and status of the Small Diverse Business as a MBE/WBE/VBE/SDVBE that will be performing the work; and
- The ECM for which the work will be performed; and
- The type of work/service/material to be performed/supplied; and
- The amount paid to date on each Small Diverse Business subcontract/purchase order this month.
- The designation of Small Diverse Business Stocking Suppliers as either a MEP (i.e., mechanical, electrical, and plumbing) Stocking Suppliers or a General Construction Stocking Supplier.
- The fee or commission paid to the Nonstocking Supplier. No credit will be given if the fee or commission is not listed and, the maximum credit shall not exceed 10 percent of the purchase order cost.

d Failure to submit a Small Diverse Business Utilization Report with each Application for Release of Payment will result in an incomplete Application for Release of Payment. Such incomplete Application will be returned to the Small GESA Contractor and no payment will be processed until a complete Application is submitted.

D. The Small GESA Contractor's Commitments Toward the Submitted Participation Levels will be Calculated and Credited as follows:

1. Only DGS-certified Small Diverse Businesses can be credited toward satisfying the participation percentages provided in the Small Diverse Business Submittal.

2. Small Diverse Business subcontractor performing at least sixty percent (60%) of the subcontract with their own employees will be credited toward the submitted percentage at 100 percent of the total dollar value of the subcontract/supply contract. Any Small Diverse Business subcontract, where the subcontractor performs less than 60% of the subcontract, will not be credited toward the submitted percentage.

3. Small Diverse Business stocking suppliers are credited at 60 percent of the total cost of the materials or supplies purchased. A stocking supplier is a regular dealer that owns, operates, or maintains a store, warehouse, or other establishment, in which the materials or supplies of the general character described by the specifications and required under the contract are bought, kept in stock, and regularly sold or leased to the public in the

usual course of business.

4. Small Diverse Business nonstocking suppliers are credited at only the amount of the fee or commission charged by the Small Diverse Business nonstocking supplier for assistance in the procurement of the materials and supplies provided the fees are reasonable and not excessive as compared with fees customarily allowed for similar services and under no circumstances shall the credit, for a Small Diverse Business nonstocking supplier, exceed 10% of the purchase order cost. A nonstocking supplier does not carry inventory but orders materials from a manufacturer, manufacturer's representative or a stocking supplier. In order for a nonstocking supplier to receive credit, it must perform a useful business function by engaging in meaningful work (i.e., negotiating price; AND determining quality and quantity; AND ordering materials; AND paying for the materials) and the fee or commission must be provided with the purchase order and the Small Diverse Business Utilization Report. Industry practices and other relevant factors will be considered.

5. Small Diverse Business manufacturers are credited at 100 percent of the total cost of the materials or supplies purchased.

6. The Small GESA Contractor is allowed to use contract amounts at any tier of supply or subcontracting; however the dollar value of any commitment to a Small Diverse Business cannot be double counted.

   a If the Small GESA Contractor or any of its non-Small Diverse Business Subcontractors or Suppliers makes a commitment to a Small Diverse Business, the credit for the subcontract/purchase order commitment, regardless of the level or tier, shall be calculated as indicated in Section D and credited toward the participation percentage provided in the Small Diverse Business Submittal.

   b In the event that the Small Diverse Business whose entire subcontract value is counted towards the Small GESA Contractor's Minimum Participation Level and then subcontracts a portion of the work or supplies associated with this subcontract to another Small Diverse Business, the dollar value of the subcontract with/to this lower tier Small Diverse Business is NOT counted in the Small GESA Contractor's Participation Level in order to prevent the duplicate counting of Small Diverse Business commitment dollars. In this case, the dollar value of this subsequent Small Diverse Business subcontract has already been included within the scope of work and dollar value of the Small Diverse Business commitment already counted as a part of the Small GESA Contractor's Minimum Participation Level.

7. All Small Diverse Businesses must present a photocopy of their current Small Diverse Business certificate from DGS to the Small GESA Contractor. The certificate must be current as of the subcontract / purchase order execution date, not revoked, lapsed or pending, in order to obtain credit for the commitment.

8. A Small GESA Contractor's Small Diverse Business participation level per ECM is calculated by adding all or a percentage of the dollar commitments (as described in this section D) to DGS-certified Small Diverse Business subcontractor s of all tiers, DGS-certified Small Diverse Business manufacturers, DGS-certified Small Diverse Business stocking suppliers, and the fee or commission paid to the DGS-certified nonstocking supplier and dividing that total amount by the total ECM price.

9. Upon receipt of the Small GESA Contractor Small Diverse Business Utilization Report, DGS will verify the certification status of the subcontractor, manufacturer, stocking supplier, or nonstocking supplier. Once reviewed by DGS, the dollar value of the subcontract or purchase order, or a percentage thereof, shall be calculated as part of the total dollar value of the Small Diverse Business participation level for the ECM.

E. Remedies

1. The DGS may, in accordance with the General Conditions for the GESA Contracts (Payments Withheld), decline to approve an Application for Release of Payment in whole or in part if the Small Diverse Business Utilization Report is not included and return the incomplete Application for Release of Payment.

2. If after the first three months following Contract execution, the Small GESA Contractor fails to progress in achieving the participation percentage provided in the Small Diverse Business Submittal (based upon the data supplied in the Small Diverse Business Utilization Report), the Funding Agency may withhold payments until the GESA Contractor and the Funding Agency discuss the reasons for lack of progress and achieve a resolution. The Small GESA Contractor is not entitled to interest on any funds withheld due to their failure to submit a properly completed Small Diverse Business Utilization Report or their failure to progress in achieving the participation level.

3. The Small GESA Contractor's compliance with requirements of the Small Diverse Business participation component, including the fulfillment of any Small Diverse Business commitments in all subcontracts and purchase orders is material to the contract between the GESA Contractor and the Funding Agency. Any failure to comply with these requirements constitutes a substantial breach of the Contract. It is further understood and agreed that in the event the Funding Agency determines that the Small GESA Contractor has failed to comply with these requirements, the Funding Agency may, in addition to any other rights and remedies the Funding Agency may have under the contract, any bond filed in connection therewith, or at law or in equity, impose remedies as applicable on the Small GESA Contractor. Remedies for breach of this component may include entry into the CRP, termination, suspension, default, penalties, and/or debarment from future contracting opportunities with the Commonwealth of Pennsylvania. The remedies enumerated herein are for the sole benefit of the Funding Agency and the Funding Agency's enforcement of any provision or the Funding Agency's indulgence of any non-compliance with any provision hereunder shall not operate as a waiver of any of the Funding Agency's rights in connection with the Contract, nor shall it give rise to actions by any third parties, including any Small Diverse Business enterprises.

Appendix J

Small GESA Project Design Manual

pennsylvania
DEPARTMENT OF GENERAL SERVICES

Small GESA Project
Design Manual

2014 Edition

BUREAU OF ENGINEERING AND ARCHITECTURE
SMALL GESA PROJECT DESIGN MANUAL

CHAPTER 1 - PROJECT ADMINISTRATION

SECTION	
100	Introduction
101	Reference and Standard Documents
102	Correspondence
103	Meetings, Minutes and Reports
104	Approvals and Compliances

CHAPTER 2 – INVESTMENT GRADE AUDIT ACTIVITIES

SECTION	
200	Site Visit
201	Survey of Existing Conditions
202	Codes and Permits
203	Land Survey
204	Subsurface and Related Site Investigation
205	Design Restrictions

CHAPTER 3 – CONSTRUCTION DOCUMENTS SUBMISSION

SECTION	
300	General
301	Construction Documents Submission
302	Regulatory Approvals and Permits
303	Approvals and Post-Conference Activities

CHAPTER 4 – DRAWINGS

SECTION	
400	General
401	Size, Format and Approvals
402	Symbols, References and Schedules
403	Miscellaneous

CHAPTER 5 – PROJECT SPECIFICATIONS

SECTION	
500	General
501	Project Manual Format
502	Instructions on Technical Specifications

CHAPTER 6 – DGS STANDARD DESIGN PRACTICES

SECTION	
600	General
601	Architectural
602	Civil/Structural
603	Heating, Ventilating and Air-Conditioning
604	Plumbing
605	Electrical
606	Vertical Transportation

CHAPTER 7 – CONSTRUCTION CONTRACT ADMINISTRATION

SECTION	
700	General
701	Project Representation

702	Documents
703	Project Close-Out

CHAPTER 8 – MISCELLANEOUS INSTRUCTIONS

SECTION	
800	Introduction
801	Quality Control and Quality Assurance Testing
802	Utility Requirements
803	Subsurface Investigation and Geotechnical Report
804	Special Site Investigation
805	Hazardous Materials
806	Subsurface Utility Engineering
807	Fuel Feasibility Study
808	Preparation of Standard Drawings and Project Manuals
809	Space Standard for DGS Projects
810	Archaeological and Historical Requirements

CHAPTER 9 – DGS SPECIFICATIONS REQUIREMENTS

SECTION	
900	Introduction
901	Division 1 – General Requirements
902	Earthwork Specifications
903	Cast-In-Place Concrete Specifications
904	Unit Masonry Assemblies Specifications
905	Structural Steel Specifications
906	Architectural Specifications
907	HVAC Specifications
908	Plumbing Specifications
909	Electrical Specifications
910	Hazardous Materials Specifications

CHAPTER 10 – PROJECT INFORMATION EXHIBITS

EXHIBIT	
Section A	**Submission Checklists**
A1	Construction Documents Submission Checklist
Section B	**Drawing Standards**
B1	Cover Sheet Layout
B2	Cover Sheet Title Block
B3	Standard Sheet Title Block
Section C	**Miscellaneous Items**
C1	List of Regulatory Approvals/Permits
C2	Boiler System Test Report
C3	Sample Electrical Panel Schedule
C4	Funding Agency Design Submission Approval Form
C5	Exceptions to L & I Special Inspections
Section D	**HazMat Protocol**
D1	Professional's Protocol Regarding Asbestos, Lead, PCB's/Mercury, Radon and Other Hazardous Materials

CHAPTER 1

PROJECT ADMINISTRATION

SECTION 100 - INTRODUCTION

100.1 PURPOSE. This Manual provides the Small GESA's Professional (**Inhouse or Retained Professional**) with a guideline of procedures and standards for the design and construction stages of the Department of General Services' Small GESA projects. The Manual's organization reflects the sequence in which services and submissions will normally occur. The Department of General Services is also referred to throughout this Manual as "DGS".

100.2 EXCEPTIONS. It is not the purpose of the Manual to establish inflexible rules that hinder practical performance. If a specific situation appears to justify a deviation from the guidelines, it should be brought to the attention of Project Coordinator. Prior written approval is to be obtained before making a deviation.

SECTION 101 - REFERENCE AND STANDARD DOCUMENTS

101.1 MANUAL INCORPORATED INTO SMALL GESA PROJECT DOCUMENTS. This Project Procedure Manual is incorporated into the Small GESA Contract documents and is complimentary to that Contract and documents incorporated therein.

SECTION 102 - CORRESPONDENCE

102.1 NUMBER OF COPIES. All correspondence on the Small GESA Project will be handled as set forth in the Administrative Procedures of the Small GESA Contract.

SECTION 103 - MEETINGS, MINUTES AND REPORTS

103.1 MINUTES. The Small GESA's Professional ("the Professional") is to furnish minutes of all meetings to DGS and the Funding Agency. The minutes are to be sent to the DGS Project Coordinator within one (1) week following the meeting. Minutes shall be emailed as set forth in the Administrative Procedures.

103.2 PROGRESS REPORTS. The Professional is to email DGS a Monthly Progress Report during the Design Stages as part of its monthly invoice. The Monthly Progress Report must be submitted to DGS and the Funding Agency even if an invoice is not submitted for that month. The Report must include at least the following information:

A. Percentage of design/document completion

B. Significant actions taken during the period

C. Anticipated circumstances that may affect schedule or cost

103.3 INSURANCE. No payment for any services will be made without a current certificate of Professional Liability Insurance and a current certificate of General Liability Insurance on file with the DGS Bureau of Professional Selection and Administrative Services. It is the Small GESA's Professional's responsibility to provide current certificates as soon as the previous certificates expire.

SECTION 104 - APPROVALS AND COMPLIANCES

104.1 DGS APPROVAL. The Department may choose to Approve / Conditionally Accept / or Reject a Design Submission. The Professional must receive DGS Conditional Acceptance or Approval of each separate Design Stage prior to proceeding to the next Stage. No compensation for wasted design or changes will be paid for work performed on subsequent Design Stages prior to receipt of approval of preceding Stages.

104.2 FUNDING AGENCY APPROVAL. The design submissions must, be approved by the Funding Agency at, or following, the Review Conference. The Professional is to secure the Funding Agency Head's approval in the form of a letter, prior to the Construction Documents Stage approval by DGS.

104.3 REGULATORY AGENCIES. The Professional must obtain the design approval of all Local, State, Federal and other regulatory agencies having jurisdiction over the Work of the Project. Permits and approvals required at various stages are covered in more detail in subsequent chapters of this manual. The Project costs shall include the cost of permits, filing fees or similar approvals obtained during the Design Stages. The Professional shall obtain the necessary Building Permit from Pa. Department of Labor and Industry under the PA UCC Code. Commonwealth projects are exempted from the local building permit approval. Where other permit applications are part of the codes approval process, the Small GESA's Professional shall make application and obtain permits.

A. 'Furnish': To supply and deliver to Project site, ready for unloading, unpacking, assembly, installation, and similar operations.

B. 'Install': Operations at the Project site, including unloading, temporarily storing, unpacking, assembling, erecting, placing, anchoring, applying, working to dimension, finishing, curing, protecting, cleaning and similar operations.

C. 'Funding Agency': The particular facility at which the work of the Project is located.

D. 'Provide': To furnish and install, complete and ready for the intended use.

E. 'Quality Assurance': Testing and inspection services provided by the Small GESA's Retained Professional as additional services, and performed by an independent Consultant, retained by the Small GESA's Professional and acting on behalf of the Funding Agency, to ensure a quality project.

F. 'Quality Control': Testing services required by the specifications, and performed by an agent of the Contractor.

CHAPTER 2

ENERGY AUDIT ACTIVITIES

SECTION 200 – SITE VISIT

200.1 The Small GESA's Professional shall visit the site during the project-specific RFP process and as needed during the investigation and preparation of the Energy Audit Report. These visits should provide the Small GESA's Professional the opportunity to review with the Funding Agency's and Funding Agency's representatives the Project Description, the Funding Agency's purpose, the Project feasibility, site location, special design or construction considerations and any available program information.

SECTION 201 - SURVEY OF EXISTING CONDITIONS

201.1 SITE VERIFICATION. The Small GESA's Professional shall investigate existing site conditions visually and by measurement, as well as by examining available records and drawings, to determine the location and nature of utility lines and all other manmade conditions as well as natural conditions, that may influence the project. As-Built records and any existing survey cannot be relied upon to adequately disclose the pertinent information.

201.2 EXISTING BUILDING CONDITIONS VERIFICATION. The Small GESA's Professional is to survey the existing conditions as needed to determine all existing conditions affecting the Small GESA project ECMs. The survey shall include HVAC, Plumbing, Electrical, and all other conditions necessary for the Energy Audit and appropriate recommendations for ECMs. As-Built drawings, if available, are

only intended as a guide. DGS assumes no responsibility for the accuracy of any As-Built drawings. Surveys of existing conditions include reasonable cutting of exploratory holes and other investigations to determine the location of existing elements as necessary for coordinating the design. The Funding Agency shall determine if the exploratory hole location is acceptable, considering the facility's operation and shall assist with relocation of property and personnel, if possible and reasonable. The Funding Agency is responsible for actual cutting and patching of the holes.

201.3 AS-BUILT RECORD DRAWINGS. Funding Agency may have As-Built Record Drawings for some of the projects constructed by the Funding Agency and the Former General State Authority (GSA). In addition, the DGS Bureau of Real Estate, Space Management Division may be able to provide the architectural plans for some DGS-controlled state office buildings on CAD. Small GESA's Professional should review the documents available at the Facility and determine their need for as-built drawings. If they exist, As-Built record drawings are available for viewing at DGS' offices in Harrisburg.

SECTION 202 - CODES AND PERMITS

202.1 PROFESSIONAL'S RESPONSIBILITY. The Small GESA's Professional shall design the Small GESA Project in compliance with all applicable Federal, State and Local Codes, ordinances, laws, and regulations.

202.2 VARIANCES. Variances to codes and ordinances are to be avoided unless absolutely necessary for the project. If a variance must be obtained, the issue must be presented and reviewed with DGS prior to submission of the variance. In no case is a variance application to be made without prior approval of DGS.

202.3 BUILDING CODES. The Project design and construction must conform to the Pennsylvania Uniform Construction Code (UCC) adopted under Act No. 45 of 1999.

A. The UCC adopts various standards and codes, including the International Building Code (IBC) for use throughout the Commonwealth of Pennsylvania. The Pa. Department of Labor and Industry will perform code enforcement and enforce the UCC. State-owned buildings are exempt from local (Municipal, Township) review of projects for a building permit.

   1. The PA Uniform Construction Code (UCC) is administered by the PA Department of Labor and Industry.

   2. All Commonwealth projects are exempted from fees for plan review and building permit application.

B. Other Building Codes and Standards (Local, State and Federal) not listed may also apply.

202.4 ZONING. DGS is required to comply with local land use, setback, height and other local zoning restrictions. The scope of work for the Small GESA's Professional includes making application and obtaining zoning approval and variances prior to Construction Documents Submission at no additional cost to the project.

202.5 SUBDIVISION AND LAND DEVELOPMENT APPROVAL. DGS will comply with local subdivision and land development ordinances. The scope of work for the Small GESA's Professional includes making application and obtaining those approvals if necessary.

202.6 PERMITS. The Small GESA's Professional shall obtain all other design approval permits, such as those issued by DEP, PHMC, Highway Occupancy permits, and permission to connect to utility systems.

SECTION 203 - LAND SURVEY

203.1 INITIAL INFORMATION. If necessary for the Small GESA Project, the Small GESA's Professional shall collect all available topographic and other site information available from the Funding Agency and DGS at the time of the initial site visit or shortly thereafter and review, analyze and determine completeness of Project Information.

203.2 OBTAINING A LAND SURVEY. An existing Property/Topographic survey, if within DGS' possession will be provided by DGS. If necessary for the Small GESA Project, the Small GESA's Professional should obtain confirmation from public records that all existing easements are shown on the land survey.

SECTION 204 - SUBSURFACE AND RELATED SITE INVESTIGATION

204.1 INTENT. If necessary for the Small GESA Project, the Small GESA's Professional, with a Civil/Structural Engineer, is to obtain data that will yield sufficient information for an accurate evaluation of the existing subsurface and related conditions for the following purposes:

A. Analysis, design and construction of foundation and substructure.

B. Analysis, design and construction of site work such as embankment, slopes, retaining structures, site and subsurface drainage, roads and pavements.

C. Soil Erosion and Sedimentation Control.

D. Analysis and cost estimation of rock and soil excavation and fill.

E. Wetlands and other land use evaluation.

F. Archaeological studies.

204.2 OBTAINING SUBSURFACE AND RELATED INFORMATION. The Small GESA's Professional, in collaboration with a Civil/Structural Engineer, is to gather available information from any previous studies or reports and by observing the site.

204.3 SUBSURFACE FUEL TANK INVESTIGATIONS. There are specific regulations regarding existing and new fuel storage systems. Unforeseen fuel systems, whether discovered during design or construction, shall be addressed by the Small GESA's Professional in the most appropriate manner so as not to impede the project. The Professional shall use due diligence to determine the presence of or lack of underground tank systems.

204.4 SUBSURFACE UTILITY INVESTIGATIONS. When it is necessary to locate unobservable utility lines, tanks or other objects due to complexity or special circumstances of the Project, the Small GESA's Professional may obtain the necessary information through the use of geophysical prospecting techniques.

204.5 SOILS ENVIRONMENTAL ASSESSMENT. The Funding Agency shall alert DGS and the Small GESA's Professional of any previous activity which could have created soil contamination problems. Where the likelihood of contamination is real, the Funding Agency and the Small GESA's Professional shall jointly determine if a soils environmental assessment is appropriate. Installing improvements on top of contaminated soil is to be avoided.

SECTION 205 - DESIGN RESTRICTIONS

205.1 STEEL PRODUCTS. Pursuant to the Steel Products Procurement Act, steel products including approved proprietary products must be composed of steel manufactured in the U.S. Products containing foreign steel are permitted only if 75% of the cost of the product is composed of articles or materials mined, produced or manufactured in the U.S. DGS may grant an exception to the prohibition if DGS

determines that the product is not manufactured of U.S. steel in sufficient quantity for the Project. The Professional shall not knowingly specify a prohibited product.

205.2 ENERGY SOURCE FOR SPACE HEATING. Heating systems or heating units installed in a facility owned by the Commonwealth shall be fueled by coal, consistent with Act 1990-28.

A. When an alternate fuel source is proposed, justification for not using coal is required. Information for the type of fuel proposed for this Project supporting the justification must be submitted to DGS for review.

B. Small GESA's Professional's written justification to use an alternative fuel source should include such considerations as:

1. Heating system first costs, and life cycle analysis.
2. Space considerations for handling and storage.
3. Space considerations for equipment.
4. Manpower requirements for operation and maintenance of a coal system.
5. State and Federal Air Quality considerations.
6. Aesthetic appeal of the site, building and/or facility.
7. Other information you consider appropriate.
8. Using natural gas from wells located in PA may be an appropriate justification.

C. Information must be specific enough to present a provable argument for using the proposed fuel in place of coal. An extensive report is not required; information can be presented in letter form addressing items listed above.

205.3 DEVIATION FROM CONSTRUCTION CONTRACT GENERAL CONDITIONS. DGS uses our standard General Conditions to the Construction Contract for all projects. The Small GESA's Professional may not deviate from the standard practices and procedures established in the General Conditions without specific prior written approval from DGS.

CHAPTER 3

CONSTRUCTION DOCUMENTS SUBMISSION

SECTION 300 - GENERAL

300.1 PURPOSE. The Construction Documents Submission ("CD") is to provide 100% complete final construction documents including drawings and specifications as required for construction. Upon receipt of written approval of the Energy Audit Report, the Small GESA's Professional shall proceed to prepare the CD submission as discussed in this Chapter.

300.2 SUBMISSION TO THE DGS BUREAU OF ENGINEERING/ARCHITECTURE. The Construction Documents shall be submitted on disc(s) to DGS' Bureau of Engineering& Architecture ("E/A") and the Funding Agency on or before the date established in the Small GESA Contract, unless another date has been approved by DGS. Delivery may be made in person or by commercial courier.

300.3 UCC APPLICATION FOR BUILDING PERMIT. If DGS determines that the Construction Documents Submission is adequate for building permit purposes, DGS will direct the Small GESA's Professional in writing to submit all the Construction Documents to the Pa. Department of Labor and Industry with a completed UCC Application for Building Permit. Commonwealth projects are exempt from UCC Building Permit Application fees.

300.4 REVIEW CONFERENCE. A conference to review the Construction Documents Submission with the Small GESA's Professional, the Funding Agency and E/A will be scheduled in E/A's Harrisburg Office approximately two (2) weeks after receipt of submission. The Small GESA's Professional, the Small GESA Contractor and any Consultants are required to attend the Conference.

SECTION 301 - CONSTRUCTION DOCUMENTS SUBMISSION

301.1 CONSTRUCTION DOCUMENTS SUBMISSION PACKAGE. On the scheduled date of the Construction Documents Submission, the Small GESA's Professional shall deliver a disc(s) containing the following information:

A. Construction Documents Submission Checklist duly checked and filled-in as appropriate.

B. One copy of the Code Review and Analysis.

C. One copy of the Construction Documents Submission Probable Construction Cost Summary for each ECM.

D. One copy of Project Specifications with the Small GESA's Professional's seal and signature on the Cover Page.

E. One complete set of all Construction Drawings, including the Cover Sheet, with the Small GESA's Professional's seals and signatures on all drawings. See Chapter 8 for the drawing format.

F. One copy of a Report Summarizing the Status of all Utilities required for the Project (Electric, Gas, Water, Sewer, Telephone, Cable TV, etc., as applicable). If applicable, provide a written estimate for the Utility Company's cost to extend service to the building.

G. One copy of the List of Regulatory Approvals/Permits – Status Report indicating the status of the submission/review/approval process for all required permits and approvals, with copies of all approvals/permits obtained to date. Completed applications for regulatory approvals/ permits must be submitted to appropriate agencies with copies to DGS at least thirty (30) days prior to Construction Documents Submission.

H. One copy of each of Final Engineering Calculations for civil, structural, HVAC, plumbing, fire protection and electrical computations as applicable to the project.

I. One copy of a CPM Construction Schedule , with recommended number of calendar days of construction and temporary heat requirements

301.2 SPECIFICATIONS. The Professional must submit the 100% complete specifications, including Cover Page, Table of Contents, List of Drawings, Division 1 – General Requirements, and technical specifications of all contracts, describing the type, quality and use of materials, equipment, processes and systems to be incorporated in the work. The Cover Page must bear the Small GESA's Professional's Seal and Signature.

301.3 DRAWINGS. Construction drawings are to be 100% complete dimensioned plans, elevations, sections, details, schedules and diagrams of all architectural, landscaping, civil, structural, HVAC, plumbing, electrical and other miscellaneous contract work. The Professional's seals and signatures must appear on all drawings.

A. The Professional's and respective Consultants' seals and signatures shall be affixed to all drawings.

B. Bind sets as indexed, with Cover Sheet.

C. All approvals from various regulatory agencies shall be noted on Cover Sheet of the drawings.

301.4 SITE PLAN DRAWING. The site development drawing should include the following:

A. General Construction: The CD Submission must include a site plan sheet showing the Limit of Contract line and locate staging areas, trailer locations, and the Small GESA Contractor parking area. The following information shall also be included as applicable to the project:
   1. Existing conditions plan with site demolition, if any.
   2. New improvements plan with all surface features indicated and detail cuts, if any.
   3. Site details of all conditions.
   4. Layout plan of new improvements with tie to control monuments, locations of easements and property lines near the work, floor elevations and source/date of survey with location/description of benchmarks.
   5. Grading and drainage plan with Stormwater Management system.
   6. Profiles of drainage lines with crossover pipes indicated.
   7. Common utility plan showing interrelationship of all utilities and the POC (Pennsylvania One Call) Serial Number. Include a 'Utility Contact Table' as required by Act 287.
   8. Landscape plans with details.
   9. Soil erosion and sedimentation plans and details with narrative.

B. After approval of the Construction Documents submission, for purposes of Land Title/Lease Confirmation by DGS Legal Unit, the Small GESA's Professional shall provide an electronic file of an 11" x 17" Site Plan, showing all property lines, easements, ROWs, and Limit of Contract line. Verify exact requirements with the DGS Project Coordinator.

301.5 ENGINEERING ANALYSIS AND COMPUTATIONS. The Small GESA's Professional must provide complete and orderly civil, structural, HVAC, plumbing (with fire protection), and electrical engineering analysis and computations. Clearly indicate all engineering processes used to develop and size all members, connections, equipment and systems. All design criteria with sketches and text to clarify analysis, assumptions and safety factors used must be included.

301.6 UTILITY SERVICES. The Small GESA's Professional shall provide a report summarizing the status of all utilities for the Project. The report shall indicate the nominal capacity of each service and confirm that each service is adequately sized to serve the Project. The report shall indicate what documents were provided for the DGS Legal to prepare easement agreements and the dates the documents were provided. The report shall also detail what actions are required to obtain services, when the actions are required, and who is to take the necessary actions.

301.7 CPM CONSTRUCTION SCHEDULE. The Small GESA's Professional shall furnish a CPM schedule of the envisioned construction sequence. This sheet shall indicate the significant construction activities and milestones (including long lead equipment times, etc.), and shall also contain the recommended number of calendar days of construction time

SECTION 302 - REGULATORY APPROVALS AND PERMITS

302.1 CONSTRUCTION/BUILDING PERMITS. The Small GESA's Professional shall obtain a UCC Building Permit from the Pa/ Department of Labor and Industry. DGS requires the Small GESA Contractor to obtain and pay for all other necessary permits, licenses and certificates required by law for proper execution and completion of its work.

302.2 SUBMISSION REQUIREMENTS. The Construction Documents Submission is to include a list of Regulatory Approval/Permits with current status of all required approvals and permits.

SECTION 303 - APPROVALS AND POST-CONFERENCE ACTIVITIES

303.1 FUNDING AGENCY APPROVAL. The Small GESA's Professional should obtain the Funding Agency's formal approval of the Construction Documents in the form of a letter to the Director of the Bureau of Engineering and Architecture signed by the Funding Agency's Secretary, or designee, with approval authority. This letter is required following the Construction Documents Review Conference, and prior to DGS Final Approval.

303.2 DGS APPROVAL. Official DGS approval is not given at the Review Conference. Construction Documents Submission approval, conditional acceptance, or rejection is issued by E/A in a letter following the Review Conference. Approval of the Construction Documents Submission by DGS is contingent on all changes requested or required being incorporated into the Construction Documents.

303.3 MINUTES. The Professional shall furnish minutes of the Construction Documents Review Conference to the Department and Funding Agency within five (5) days following the conference. Professional's post-conference comments, included with the meeting minutes, shall be identified as not a part of the meeting minutes.

CHAPTER 4

DRAWINGS

SECTION 400 - GENERAL

400.1 PURPOSE. This Chapter presents standards and guidelines for drawings prepared for Small GESA projects. Generally accepted professional practices are to be used, except where different DGS standards or practices are given.

400.2 WORKING DRAWINGS. Original drawings must be CADD-generated drawings. Line and lettering must be dark and large enough for microfilm 1/2 size reproduction. Lettering must be a minimum 3/32" height, and be legible on half-size prints. Signatures and code approvals must be in permanent ink. Except where drawings are diagrammatic, all drawings shall be drawn to scale.

400.3 INFORMATION. Final construction drawings on the disc shall contain adequate information, including schedules, details and pertinent information necessary to perform the work.

400.4 'AS-BUILT' RECORD DRAWINGS. Record drawings of the construction shall adhere to the industry standard for 'As-Built' Record Drawings in .pdf format

SECTION 401 - SIZE, FORMAT AND APPROVALS

401.1 COVER SHEET. All projects shall have a Cover Sheet. The Index to Drawings shall list each drawing by name, sheet number and descriptive title. Cover Sheet shall have all pertinent regulatory approval references. List all Consultants, indicating their discipline.

401.2 PROFESSIONAL SEAL AND SIGNATURE. For the Construction Documents Submission, the Small GESA's Professional Seal of the Registrant in charge of the work must appear on all drawings, specifications, plats and reports issued by the Small GESA's Professional. The Architect's Seal must appear on the architectural drawings, the Engineer's Seal must appear on the engineering drawings, etc. An embossed seal, a stamp of a design identical to the seal, or a reproduction of a stamp identical to the seal, may be used with the Registrant's signature applied near or across the seal.

SECTION 402 - SYMBOLS, REFERENCES AND SCHEDULES

402.1 SYMBOLS. A Legend showing all reference symbols and abbreviations with a clear explanation of each must be provided. Symbols utilized in the development of drawings shall be those commonly recognized by Professionals throughout the building industry as being both identifiable and universal in meaning.

402.2 REFERENCES. Industry-recognized reference standards must be used in the preparation of all Contract Drawings. The Department recognizes the following reference standards as the most commonly used reference publications available to the professional building industry. These reference standards are mentioned because of their universal acceptance. It is not the intention of the Department; however, to limit or restrict the use of other industry recognized standards or reference material in the preparation of the contract drawings.

A.	Ramsey/Sleeper -	Architectural Graphic Standards
B.	Time-Saver Standards for Architecture -	Design Data
C.	ASHRAE -	HVAC reference
D.	SMACNA -	Sheet Metal reference
E.	AIA Standard -	Numbering Drawings

402.3 SCHEDULES. The Department has no standard format for schedules. It is important to stress, however, that the development of accurate and complete schedules is essential to clear and concise documents. Do not include manufacturers or model numbers in the schedule unless permitted by the Department. Show these names and numbers in the appropriate specification sections. Schedules shall include as applicable to the project:

A. Door schedule, indicating door type, frame type, threshold, hardware set, and rating.

B. Finish schedules, indicating each wall, floor, ceiling, base, etc., with an integral or separate color schedule.

C. Window schedule.

D. Lintel schedule.

E. Hardware schedule shall be in the hardware specification of the Project Manual.

F. Beam and column, and other structural member schedules with design and construction loads and information.

G. Caisson and pile schedules with design and construction information, anticipated bearing elevations and loads.

H. Fixture schedules (all contracts), including design conditions, size of service connections. Fixtures must be identified on the drawings.

I. Equipment schedules (all contracts), including design conditions, size and capacity, motor horsepower and all electrical characteristics.

J. Electrical panel schedules.

SECTION 403 - MISCELLANEOUS

403.1 AS-BUILT CHANGES. At the completion of the Project, the Small GESA's Professional shall prepare and submit record 'As-Built' drawings as further discussed in the General Conditions of the Small GESA Contract. The Small GESA's Professional shall identify 'As-Built' changes using symbol and description key on the standard title block.

403.2 STRUCTURAL DRAWING REQUIREMENTS. As necessary or applicable to the project, the construction contract drawings shall include structural information describing, but not limited to, the following:

A. Design live loads, wind loads and other applicable loads, and show plan locations of special heavy loading areas.

B. Strength of structural materials with ASTM designations.

C. Required bearing capacity of bearing strata.

D. Required capacity of piles.

E. Structural design provisions included for future additions and alterations.

F. AISC type of construction.

G. Sufficient details to allow construction.

H. Criteria for removal of shoring and form work.

I. Requirements for special earthwork.

403.3 HVAC, PLUMBING AND ELECTRICAL DRAWING REQUIREMENTS. The following guidelines are to be used with accommodation for conditions of specific projects. HVAC, Plumbing and Electrical drawing criteria should be similar.

A. Water, Soil, Waste and Vent Piping:

1. 1/4” scale drawing of piping for all toilet rooms and kitchens.
2. Isometric drawing and/or riser diagrams.
3. Identify and number all stacks, rainwater conductors, hot and cold water risers, cleanouts and floor drains.
4. Detail of safe wastes for refrigerator drains, fountain equipment, coffee urns, vending machine, etc.
5. Clearly indicate all pipe sizes.
6. Show location of shock absorbers.

B. Condensate Drain Piping:

1. Drain line shall be run to a safe waste, slop sink, funnel drain, etc.
2. Detail of connection to drip pan.
3. Riser diagram.
4. Clearly indicate pipe sizes.

C. Fire Protection:

1. Fire protection systems shall be designed in accordance with the current requirements of the NFPA and National Board of Fire Underwriters shall be considered a part of the specifications.
2. Prepare detailed diagrams or drawings which may be required by the Department.
3. Riser diagram of standpipe system showing valved outlets at each floor.
4. Show location of all fire hose cabinets.
6. Show all sprinkler head locations.
7. Show all fire protection systems in the building.
8. Clearly indicate location and size of all sprinkler main and risers.

D. Gas Piping:

1. The entire design of gas piping shall be made in strict accordance with the recommendation of the local gas company and the ASME Code for Pressure Piping

ASA B 31.1-1955 and American Standard for Installation of Gas Piping and Gas Appliances in Building ASA 221.30.
2. Riser diagram.
3. Clearly indicate location and size of all gas piping.

E. Mechanical, Electrical, and Data Communications Equipment Rooms:

1. Show location and size of all equipment.
2. Show proper clearances of all equipment, conforming to Department of Labor & Industry, "Regulations for Boilers and Unfired Pressure Vessels".
3. Exit from equipment rooms shall be large enough to remove all equipment without dismantling.
4. Proper clearance for tube removal from all equipment.
5. Proper clearance for electrical equipment in accordance with NEC.
6. Proper clearance around all equipment for maintenance work.

F. Roof Plan:

1. Show location of all roof drains (furnished, installed and flashed by GC).
2. Show location of all roof penetrations, curbs, etc.
3. Show location and size of all rooftop equipment.

G. Equipment Pads and Structural Supports:

1. Show steel member sizes and details.
2. Show all dimensions.
3. Show reinforcing size and pattern.
4. Method of anchoring equipment.
5. Vibration eliminators and isolators.
6. Design to be checked by Structural Engineer.

H. HVAC Equipment, Ductwork and Piping:

1. Show all items of equipment including anchors and support structures and piping.
2. Show all ductwork preferably to scale with duct sizes shown and coordinated to avoid interference.

I. Electrical Equipment:

1. Show proper distribution riser diagrams.
2. Use DGS standard panelboard schedule.

J. Other Systems: Show location of all equipment and devices of other systems including building automation, temperature control, fire alarm, security, data and telecommunication, and lightning protection.

CHAPTER 5

PROJECT SPECIFICATIONS

SECTION 500 - GENERAL

500.1 CONSTRUCTION DOCUMENTS SUBMISSION. Final specifications must be 100% complete as of this submission.

SECTION 501 - PROJECT MANUAL FORMAT

501.1 CONSISTENCY. The preferred format is CSI Master Format/Section Format. The AIA 'Master Spec' or similar formats are acceptable. Any other format must be approved by DGS.

501.2 LIST OF DRAWINGS. This document is to be prepared by the Small GESA's Professional.

SECTION 502 - INSTRUCTIONS ON TECHNICAL SPECIFICATIONS

502.1 STANDARD SPECIFICATIONS. Commercially available pre-written generic specifications by CSI or AIA Master Spec or similar are acceptable with certain editing modifications using the latest available edition. All paragraphs and subparagraphs must be numbered. DGS Standard Specification Requirements must be incorporated into the contract specifications, as applicable.

502.2 EDITING. Specifications are to be created to suit the requirements of each individual project, editing specs to exclude all non-pertinent information. Procedures specified must not conflict with the DGS General Conditions.

502.3 REFERENCED STANDARDS. Entire published standards, such as PennDOT Form 408 or SMACNA are not to be referenced. If only a portion is required, include the applicable text from the standard in the specification.

502.4 TRADE NAMES. Trade names are to be used only to establish a standard of quality, appearance, design and function whenever possible. Trade names are not to appear on the drawings.

502.5 QUALITY CONTROL TESTING. Quality control tests to be done by the Small GESA Contractor are to be included in Section 01400 of the Project Specifications.

502.6 BASIC CODES/REGULATIONS. Reference to an edited list of the latest edition of design codes shall be made in each appropriate section of each contract specification, as applicable. The following is a partial list, as a guide:

A. Life Safety Code – NFPA 101

B. Labor & Industry – Uniform Construction Code (UCC)

C. Pennsylvania Code – Department of Health regulations

D. National Electrical Code – NFPA 70

E. National Electrical Safety Code – ANSI C2

F. ASHRAE

G. Pennsylvania Code – Elevators, lifts, escalators, dumbwaiters, hoists and tramways – Labor & Industry 34 Code Chapters 7 and 8

H. Safety Code for Elevators and Escalators – ASME/ANSI A 17.1

I. Accessibility Codes - UCC

J. City or Local Municipal Codes

CHAPTER 6

DGS STANDARD DESIGN PRACTICES

SECTION 600 - GENERAL

600.1 PURPOSE. This Chapter provides information concerning design and drawing standards adopted by DGS as standard for Small GESA projects. This section in no way limits the responsibilities of the Small GESA's Professional and its Consultants stated or implied elsewhere.

600.2 ACCEPTABLE DGS PRACTICES. The practices included are both those written by DGS and standards referenced from other agencies. It is not the intent of this Manual to furnish a complete and up-to-date list of all acceptable industry standards. Questions should be discussed with the DGS Project Coordinator.

SECTION 601 - ARCHITECTURAL

601.1 ROOF DESIGN. Roof designs must provide a positive slope to roof drains of at least 1/4" per foot. Crickets and similar fabrications shall be employed to eliminate ponding in valleys. In this regard:

A. Achieve the minimum slope by sloping the structural framing system, or justify other methods such as sloped insulation.

B. Roof drains are to be 4" minimum, unless justified otherwise,

C. Provide secondary drainage system as required by Code.

601.2 ROOF DECK. Metal roof decks, new or existing, shall not be used for suspension or support of ductwork, conduit, ceiling systems, lighting fixtures or any other miscellaneous equipment or items.

A. All suspended items shall be supported from the structural members or a suspension system supported by the structural members. Include the above provisions in the contract specifications.

B. When ponding occurs because of design of secondary drain system, the ponded water load should be included in the live load.

601.3 BUILDING JOINTS. Expansion and control joints are required in partitions, walls, and floors to control cracking. These must be specified and shown on the drawings. Expansion joints in exterior walls are to have a mechanical weatherstop, in addition to any compressible sealant used.

A. Structural members must be permitted free movement. It is preferred to keep the main structural members within the building insulation envelope to minimize its expansion and contraction.

601.4 FINISH CARPENTRY. The Quality Standards of the Architectural Woodwork Industry (AWI) are to be used for designing and specifying custom woodwork, cabinetry and finish carpentry.

601.5 WINDOWS. The standards of the Architectural Aluminum Manufacturers Association are to be used for designing and specifying aluminum windows. Specific trade requirements and standards will govern for other types of windows. All metal windows shall incorporate a thermal break. All windows shall have insulating glass. All operable windows shall have insect screens.

A. Rough-ins shall be stubbed at least 8" above floor, out of walls or down from ceiling, and pressure lines valved (waste lines capped), unless shown otherwise for particular reasons.

B. All wiring of equipment, both internal and external must be in accordance with the National Electric Code.

601.6 LIGHTING USE. Standards of design for illumination shall be Lumens Per Watt for equipment selection, except where special effect is sought.

601.7 FIRE EXTINGUISHERS. Fire extinguishers needed for occupancy of the Project (whether in cabinets or loose) are included in the costs for the project.

A. Bubble-face cabinets are preferred to flush or surface mounted cabinets.

B. Extinguishers are to be the type and size recommended by the National Board of Fire Underwriters' and shall bear the UL label.

601.8 PROVISIONS FOR FUTURE RADON PROTECTION. The following features should be included as recommended in EPA/625/R-92/016 dated January 1993:

A. Use a minimum 4" layer of #57 stone with a vapor barrier under all basement slabs on grade. Seal or detail slabs for future sealing of all joints and penetrations, including the perimeter. Include a suction void and stubbed up vacuum exhaust pipe for future connection.

B. If basement walls are made of concrete block they should be selected for minimum porosity and filled solid.

C. Where crawl spaces occur, install a vapor barrier over the earth and seal all floor penetrations. If a stone layer is installed under the vapor barrier, a future vacuum exhaust system can be installed.

D. HVAC systems should be designed to provide a positive pressure throughout the building.

E. Radon testing should be included in the air quality testing after the building is enclosed and nearly ready for occupancy.

SECTION 602 - CIVIL/STRUCTURAL

602.1 CIVIL. Site design shall be by a Civil Engineer Registered in the Commonwealth of Pennsylvania. Design shall comply with all codes and federal, state and local regulations and obtain required design approvals. Information shall include but not be limited to:

A. Drawings:

1. Existing site plan with all above ground and underground improvements, property line metes and bounds if the site borders property lines and site demolition, indicated and described in detail. Locate and describe two or preferably three benchmarks and indicate the source and date of the survey. Note PA One Call design notification serial number.
2. Site improvements indicating all visible surface improvements. Provide building layout dimensions from control points. Locate the Contract Limit Line and the Contractor staging and parking areas.
3. Grading and drainage with existing and new contours or point grades to allow construction. Show stormwater management system. Show all drainage structures with invert and top elevations; provide profiles with pipe crossings indicated.
4. Landscaping drawings.
5. Soil erosion and sedimentation drawings, and narrative.
6. Details of all work with section cuts on plans.

B. Specifications: The Civil Engineer shall write or review the specification sections governing all work that he has designed. Where specifications sections are provided in Division 2 for work (such as concrete paving) which is a sub-category of the main category subsequently specified (Concrete, in Division 3) they shall be fully coordinated, so that requirements of the main specification are required by reference.

602.2 STRUCTURAL. Structural design shall be by a Professional Engineer, licensed in the Commonwealth of Pennsylvania.

A. General: Design all primary and secondary structural elements and comply with all requirements of the Pennsylvania UCC. Commonwealth office buildings are to be designed for live load of 125 psf. Where renovating an existing building, the structural adequacy shall be analyzed for code compliance.

B. Drawings: Coordinate with the Architect and verify that all architectural details reflect structural design. Provide design notes with design load criteria and notes on all structural systems. Information shall be provided on drawings, which includes but is not limited to:

1. Foundation Systems: Following the recommendations of the Geotechnical Engineer Consultant, provide a complete design of foundation systems. Fully define the work, providing bearing elevations necessary to establish a clear scope of work for bidding. Consider ground water conditions and accommodate foundation drain and waterproofing systems. Drilled piers requiring inspection are to be a minimum of 30" diameter.
2. Concrete: Design in accordance with applicable current ACI specifications.
3. Structural Steel: Design in accordance with applicable current AISC specifications.
4. Steel Joists: Design in accordance with applicable current SJI specifications.
5. Steel Deck: Design in accordance with applicable current SDI specifications.
6. Cold-Formed Steel Framing: Design in accordance with applicable current AISI specifications.
7. Masonry: Design in accordance with applicable current ACI specifications.
8. Wood framing: Design in accordance with applicable current NDS specifications.
9. Other Systems: Other structural systems shall be designed in accordance with requirements of stated applicable specifications required by Code or, where no code governs, by engineering judgment.

C. Specifications: The Structural Engineer should write or review the specification sections governing the work he has designed. Specifications, not the drawings, are to contain testing requirements. Tests and inspections to occur are to be listed in Sections 01400 and 01401, not the technical sections. See Chapters 13-15 for instructions and details.

D. Performance-Specified Structural Systems: If a structural system or component is selected where the manufacturer or contractor (hereafter referred to as "manufacturer") does the design instead of the Project structural engineer, it must meet the following criteria:

1. The system must be selected because it is superior to other systems in quality, longevity, efficiency, cost or other features innate to the system. It is not to be selected simply to avoid the effort of design.
2. The Small GESA's Professional may base his design on that of a specific manufacturer/supplier of its choosing, and document that design on the Drawings and in the Specifications, as the "Basis of Design". The design must be detailed sufficiently by the Small GESA's Professional to clearly indicate intent and functionality. Other manufacturers are to be permitted only to substitute their technology, without changing the design configuration shown, unless specifically permitted.

3. The design criteria and loads must be fully defined in the Contract Documents, including specifics on locally applied loads. The system must be designed using best design practices and comply with all codes and regulations.
4. The system is not to be selected unless the Project structural engineer is capable of checking the manufacturer's shop drawings for structural adequacy, and when shop drawings are processed the Project structural engineer must state that he has approved the design of the manufacturer and checked it for structural adequacy. His approval need not be based on more analysis than he deems necessary to make this statement.
5. Where there is an industry association which exercises quality control over its members, membership should be required.
6. The manufacturer's design engineer must be licensed in the Commonwealth of Pennsylvania.
7. The system used as the "Basis of Design", and the equals named in the specifications, must be available to all bidders. At least three (3) manufacturers/suppliers must be specified.
8. If the system is a complete building system, the specified system and its equals must be available to all bidders.
9. The design of cold-formed studs and joists and other materials manufactured universally according to industry standards shall be by the Small GESA's Professional.

E. Metal Stud Bearing Walls: DGS policy does not allow Commonwealth buildings to be constructed with metal stud bearing walls.

F. Slabs On Grade Within Buildings: Slabs are to be designed to allow removal and replacement, without disturbing exterior walls or the supporting structure, unless specifically authorized.

SECTION 603 - HEATING, VENTILATING AND AIR-CONDITIONING

603.1 GENERAL. The HVAC system shall comply with all the state's UCC requirements, including ASHRAE standards and guidelines set forth herein and/or state and local codes, whichever is more stringent.

A. The number of air changes shall conform to recommendations established by ASHRAE standards and/or the PA and local Health Department.

B. The design and installation of air duct distribution exhaust and return systems shall conform with requirements of SMACNA standards.

C. Exhaust hoods for kitchens and laboratory facilities shall conform to NFPA requirements and bear the NSF seal of approval, and be UL listed or classified. Hoods shall adequately collect and exhaust air, fumes, smoke and vapors from the area in which the hood is installed. Provide outside air so that the room area is sufficiently ventilated, and maintains the required negative pressure.

D. Locate fire dampers to conform to NFPA 90A. Fire dampers are to comply with UL 555 and be so labeled by an approved testing or inspection agency.

603.2 STEAM AND HOT WATER HEATING SYSTEMS. All equipment used for steam or hot water heating systems shall be constructed and installed in accordance with requirements of the Department of Labor & Industry, Boiler Division and ASME Boiler and Pressure Vessel Codes.

A. See Chapter 2 for boiler fuel requirements.

B. Steam and HWS and HWR pipes shall be steel per ASTM A 53, A 106 or A 120 Schedule 40. Condensate return pipes shall be steel per ASTM A 53, Schedule 80.

C. All valves for hot water boilers, hot water pressure vessels, high and low pressure steam boilers and pressure reducing stations shall be marked in accordance with ASME, Boiler and Pressure Vessel Code indicating type of service, capacity of valve in BTU/HR or lbs. steam per hour and operating pressure. Pressure relief valve rating shall not exceed the maximum allowable working pressure of the boiler.

D. Pipe joints for steel piping shall be threaded up to and including 2" diameter. Pipes 2-1/2" diameter and over shall be joined by welding or flanged fittings. Copper tubing shall be joined by brazing or soldering. For 3" diameter or larger, mechanical couplings may be used for low pressure hot and cold water systems only in accessible locations. Seals for mechanical couplings shall be designed for the specified operating and type service.

E. Properly support all piping to permit expansion and contraction.

F. Piping for branches to baseboard radiation, fan coiled units and such other local heating equipment which may require servicing or replacement shall be provided with a union on each side of the device.

G. Connections to pumps, circulator, hot water heater and all other equipment which may require servicing or replacement shall be provided with a union on each side of the device.

H. Insulate all heating and cooling system pipes within the building with the minimum thickness as prescribed by the Thermal Insulation Manufacturers Association (TIMA). Pipe insulation and covering shall have a flame-spread rating not exceeding 25 and a smoke-developed rating not exceeding 50.

603.3 COAL-FIRED BOILERS. Coal fired boiler plants shall be fully equipped to provide for all coal and ash handling equipment, control panels, water treatment system and all other associate appurtenances.

A. File Permit application with DEP and other regulatory agencies prior to Construction Document Submission.

B. Provide appropriate equipment to conform to the requirements of DEP – Air Quality and Waste Management codes and regulations, in addition to the requirements of the Department of Labor & Industry Boiler Division.

C. The Boiler Capacity and Performance Test is under the supervision of the Small GESA's Professional and boiler operator personnel. The Funding Agency provides the fuel for the test.

603.4 INCINERATORS. Incinerators used for burning of trash or medical waste shall conform to the requirements of DEP, and/or the local Health Department. The Small GESA contractor must file a permit application with DEP and other regulatory agencies prior to the Construction Documents Submission.

603.5 TESTING, ADJUSTING AND BALANCING (TAB) AGENCY. The services of a qualified TAB agency shall be provided by the Small GESA Contractor. Such agency shall have in its employ a Professional Engineer registered in Pennsylvania. The TAB agency shall have a minimum of five (5) years experience in the testing, adjusting and balancing of all water, hydraulic and air systems.

A. The testing and recording of all dates shall in general conform to standards of AABC or NEBB or as may be approved by the Small GESA's Professional.

B. All TAB reports shall be certified by the testing agent and reviewed and approved by the Small GESA's Professional. The report shall make record of any and all deficiencies found by the testing agent prior to, during and after testing. The Professional, prior to approval,

shall provide to the DGS Bureau of Construction appropriate comments regarding such deficiencies indicating how such deficiency, if any, was corrected.

603.6 REFERENCE CODES AND STANDARDS. All codes and standards applicable to design, installation and material requirements shall be of the latest date of issue.

603.7 GEOTHERMAL HVAC SYSTEM DESIGN. To insure proper initial operation and ongoing serviceability, the following requirements shall be incorporated into all closed-loop geothermal piping systems.

A. Bring each borehole piping individually back to supply and return headers in the Mechanical Room. For a very large system (over 60 boreholes), a maximum of two (2) boreholes per circuit will still allow the potential to flush dirt and debris adequately.

B. Add shutoff/balancing valves at each header connection to allow breaking the borehole circuit for flushing.

C. Incorporate a duplex basket strainer somewhere on the return leg from the well field, before the pumps.

D. Add wording in Contract Specifications to require the Contractor to monitor the amount of grout pumped down each borehole to insure complete filling of all voids, which would impair heat transfer.

E. Utilize, to the extent possible, two-pipe, reverse-return piping configurations for house piping from headers to heat pumps.

F. Insulate house piping where it passes thru finished spaces, or where extremes in building temperatures could either cause condensation, or affect thermal performance of the equipment.

G. If aqueous glycol is proposed for the geothermal heat transfer fluid, specify and design around propylene glycol rather than ethylene glycol, for environmental reasons.

H. Install sufficient instrumentation in the geothermal piping system to enable maintenance personnel to monitor and troubleshoot individual borehole performance.

I. The Small GESA Contractor shall be responsible for installation of geothermal well field. This provides the Department a single point of responsibility in the event of performance issues with the system.

SECTION 604 - PLUMBING

604.1 GENERAL. The design and installation of plumbing systems, including sanitary and storm drainage, sanitary facilities, water supply, storm water and sewage disposal, shall comply with the requirements of Pennsylvania UCC and/or local municipal plumbing codes, whichever is the more stringent.

604.2 BASIC REQUIREMENTS. The following provides basic requirements for the design and construction of plumbing systems. This guide does not supersede any state, municipal or other governing agency's codes and regulations.

A. Toilet Fixtures:

1. All public toilet rooms shall be provided with wall hung lavatories, urinals (for men) and water closets using appropriate fixture carriers. Private toilet rooms may use floor mounted water closets. Provisions for handicapped fixtures shall conform to all applicable codes.

2. Lavatories shall be rectangular (20" x 18" minimum) with combination faucets and pop-up waste stoppers, except in state parks. Use screen guards in state parks. Provisions for lavatories for people with disabilities shall comply in number, position and fixture type, with all applicable codes.
3. The minimum number of fixtures. For the percentage of men and women occupants consult with the Funding Agency. Unless otherwise required for particular building types, the number of fixtures for each toilet room shall conform to applicable codes. In places of assembly, the number of fixtures shall be provided so that waiting time for use of the restroom facilities shall not be greater for women than for men.

B. Service Sinks: The number of service sinks required in any building should be determined by the janitorial requirements and the location of the building plumbing. Sinks will be installed in a separate janitor service closet.

C. Water Coolers and Drinking Fountains: Provide chilled drinking water in all buildings, except residences. Coolers are to be lead free in soldering and tank construction.

D. Special Temperature Controls: Hot water for baths and showers in all hospitals, health care centers and other such Institutions shall be provided with temperature-pressure controllers, so that the delivered hot water temperature does not exceed 110°F.

E. Emergency Showers and Eyewash Stations: Emergency showers and/or eyewash stations shall be provided and strategically located in all chemical laboratories and other facilities where individuals are exposed to chemical or fire harm. Emergency showers shall be supplied with tempered water.

F. Materials: Unless otherwise instructed, plumbing fixtures shall conform, as a minimum, to the following indicated standards. All fixtures shall be of a water conservation type and conform to applicable codes.

1. Toilet Fixtures: Water closets, urinals and lavatories shall be vitreous china.
2. Service Sinks and Bath Tubs: Shall be porcelain cast iron, or as approved by the Department.
3. Piping and Fittings:
   a) Water Service: Schedule 40 (Type A), galvanized steel per ASTM A 53 or ASTM A 120.
   b) Water Distribution: Copper tubing Type A or Type B per ASTM B 88.
4. Sanitary Drainage System and Vents:
   a) Aboveground: Type A, Type B or Type D (cast iron ASTM A 74 – service weight)
   b) Underground: Type C (cast iron ASTM A 74 – heavy weight) (Type D).
   c) Vents: Galvanized steel (per ASTM A 53 or cast iron per ASTM A 74 light weight). Vents through roof shall not be less than 3" diameter.
5. Rainwater Conductors: Type D (cast iron ASTM A 74 light weight).
   NOTE: Downspout and roof gutters are to be within the scope of work of the General Contractor.
6. Storm Sewer: Refer to National Plumbing Code and/or local codes.
7. Pipe Fittings: Malleable iron per ANSI B 16.3.
8. Acid Waste: Shall be a separate system and shall be neutralized before entering the sanitary sewer system. Pipe shall be high silicon alloy iron, or brass pipe and fittings. Borosilicate glass pipe and fittings may be used for acid waste lines within the building only, not below grade.
9. Vent Flashing: Coordinate with the General Contract for material required and Prime Contractor responsibility.
10. Solder: Shall be lead free, 95/5 solders.

11. Water and Fire Protection Piping: Mechanical fittings for pipe sizes 3" diameter or greater may be used in accessible locations, but shall not be used in inaccessible locations, above finished ceilings or light fixtures. Piping for fire protection systems shall conform to NFPA 13 and as may be modified by the Department and/or local codes.

604.3 REFERENCE CODES. All codes and standards applicable to design, installation and/or material requirements shall be the latest date of issue. Basic references are:

IPC	International Plumbing Code
ANSI	American National Standard Institute
ASSE	American Society of Sanitary Engineering
ASTM	American Society of Testing and Materials
MSS	Manufacturers Standardization Society of Valves and Fitting Industry
PDI	Plumbing and Drainage Institute
ASME	American Society of Mechanical Engineers

SECTION 605 - ELECTRICAL

605.1 REQUIREMENTS. Electrical design shall comply with all applicable codes, regulations and good engineering practices. Design and installation of electrical systems shall comply with the requirements of the National Electric Code (NEC), latest edition, and the Uniform Construction Code (UCC), whichever is more stringent.

605.2 MINIMUM DESIGN CRITERIA. Electrical design shall meet or exceed the following:

A. Lighting levels shall use Illuminating Engineering Society (IES) recommendations as maximum and 80% of IES standards as minimum, unless directed otherwise by the UCC or the Department. Construction stage lighting shall meet OSHA, Standards for Light Levels.

B. Voltage drop in feeders shall not exceed 2%.

C. Voltage drop in branch circuits shall not exceed 3%.

D. All specified equipment shall be designed to safety interrupt and/or carry the available fault current at the equipment.

E. Energy conservation shall be a prime consideration in all design. Dry type transformers shall be rated 150°C with 80°C rise.

F. All conduits, raceways, etc. shall be equipped with a green colored insulated grounding conductor. The conduit system shall not be relied upon as the only grounding path.

G. Set screw fittings are not acceptable on Electrical Metallic Tubing (EMT) – use compression fittings.

H. Specify security screws where required.

I. Specify 10% spare breakers in all panels where economically feasible.

J. Provide 15% provisions for installation of future breakers (not just space) in all panels.

K. Panelboard schedules shall include raceway and wire size and equipment ratings.

L. Conduct a thorough survey of existing conditions.

M. Coordinate electrical layouts and plans with layouts and plans of all other design disciplines.

N. Conduit measuring tape shall be included in all empty conduits.

O. Specify methods of controlling spread of fire and smoke. Specify fire-rated sealants and 'poke through' fittings.

P. Emergency lighting levels shall be in accordance with the UCC requirements.

Q. Maintain adequate working space around and in front of all electrical equipment.

R. Do not attach any electrical items to the metal roof deck.

S. If permission is given to run conductors exposed, specify that they shall be attached firmly to the building structure. They are not to be allowed to lie on the suspended ceiling.

T. Provide resistance heater strips in outside housed switchgear.

605.3 REGULATORY AGENCY AND UTILITY COMPANY APPROVALS. The Small GESA's Professional must meet standards and obtain approval of the following, for the Construction Documents Submission:

A. Emergency and Exit Lighting Systems.

B. Fire Alarm and Detection Systems.

C. Service Size, Location, etc.

D. Telephone and Data Communications and Computer Service Entry and Details.

E. Cable TV Service Entry Details.

F. Natural Gas or Propane to Emergency/Standby Generators – Service Location.

G. Diesel Fuel to Emergency/Standby Generators – Service Location.

H. The approval of local regulatory agencies where required.

SECTION 606 - VERTICAL TRANSPORTATION

606.1 REQUIREMENTS. Elevator, escalator, dumb-waiter, chair lift, etc. design shall comply with all applicable codes, regulations and engineering standards.

606.2 MINIMUM DESIGN CRITERIA. Vertical transportation design shall meet or exceed the following criteria:

A. Car sizes and speeds to comply with Funding Agency requests and applicable codes.

B. Light, switch and receptacle to be provided in all elevator pits.

C. Provisions for a sump to be made in all elevator pits.

D. Hole-less elevators are not to be specified without special permission.

E. Roller guides, not slide shoes, are to be specified.

F. Planed "tee" rails are to be specified, round rails are not acceptable.

G. Smoke detectors are to be installed at the top of each elevator shaft, in each elevator machine room, and in elevator lobbies.

H. Smoke detectors are to be tied to the building fire alarm system.

I. Fireman's control shall be provided where required by code.

J. Telephones shall be provided in all passenger elevators.

K. Physically handicapped accessibility standards shall be met.

L. Elevators shall be connected to normal and emergency power in all hospitals, health care facilities, office buildings, and other buildings where required by code.

M. Emergency power, where not required by code, may be provided to elevators upon request of the client agency, subject to budget constraints.

N. Provide hoist beams in all elevator shafts – coordinate with structural engineer.

O. Provide backup system lowering devices in hydraulic elevators not connected to emergency standby power.

P. Provide emergency lighting in all elevator cabs.

Q. Provide ladders in elevator pits).

R. Provide heating and ventilation in all elevator machine rooms, and cooling when equipment requires.

606.3 REGULATORY AGENCY APPROVALS. The Small GESA Contractor will obtain approval of the Vertical Transportation System(s) by all agencies having jurisdiction; however, the Small GESA's Professional must assure that what he designs and specifies is approvable.

CHAPTER 7

CONSTRUCTION CONTRACT ADMINISTRATION

SECTION 700 - GENERAL

700.1 GENERAL. The Small GESA's Professional's activities during the Construction Contract Administration Stage are presented in general terms. This Chapter should be used in concert with the Bureau of Construction's Administrative Procedures and the Construction Contract General Conditions.

700.2 OVERVIEW OF RESPONSIBILITIES. The Construction Phase commences when DGS issues a Notice to Proceed after reviewing the Funding Agency and DGS approve the Construction documents. After the Project is completed and formally accepted by DGS, the Small GESA's Professional shall execute a Certificate of Completion and revise the original Contract Documents, reflecting all changes recorded during the course of construction. Record As-Builts shall be delivered to DGS and be identified as "As-Built Record Drawings" in .pdf format.

700.3 ADMINISTRATION. The Funding Agency is the lead project administrator. The Resource and Energy Management Office is the lead DGS project administrator during the Construction Phase. The Department may, at its discretion, appoint a full-time Construction Manager to oversee the Construction Administration.

700.4 ROLE OF THE OFFICE OF RESOURCE AND ENERGY MANAGEMENT. The DGS Project Coordinator serves as an aid to the Funding Agency during construction. E/A should be copied on all design-related correspondence, shop drawings and product/material submittals.

700.5 JOB CONFERENCES. The Small GESA representative chairs regular bi-weekly Job Conferences at the site. Attendance by the Small GESA Contractor and the Small GESA's Professional is mandatory at all Job Conferences, whether it is a regularly scheduled bi-weekly conference or a special meeting called for by DGS.

SECTION 701 - PROJECT REPRESENTATION

701.1 BASIC SERVICES. The Small GESA's Professional shall visit the project site at least bi-weekly during periods of construction. In addition to bi-weekly visits to project sites, the Small GESA's Professional is required to attend, at the request of DGS, any/all project site conferences that may be necessary to clarify the Contract Documents.

701.2 CONSULTANTS. It shall be the duty of the Small GESA's Professional to have his Consultants visit the project site periodically during their respective disciplines' period of active construction, at least bi-weekly, or at such intervals as required by DGS to insure the progress and quality of the work and to determine if work is proceeding in accordance with the Contract Documents.

701.3 QUALIFICATIONS. The Small GESA's Professional's Representative (full time or not) must be qualified by training and experience to make decisions and interpretations of the Construction Documents. DGS reserves the right to request the replacement of any Project Representative assigned to the Project who is not performing satisfactorily.

SECTION 702 - DOCUMENTS

702.1 SUBMITTALS. The Small GESA's Professional must promptly review and accept/reject shop drawings, samples and other submissions of the Small GESA Contractor.

702.2 SUPPLEMENTAL DRAWINGS. Interpretations of the Contract Drawings and Project Manuals must be reviewed and approved by DGS prior to being issued to the Small GESA Contractor. Drawings issued to clarify the work must be marked as "SUPPLEMENTAL", followed by the date of issue.

702.3 TESTING PROCEDURES. The Small GESA Contractor is to be guided by manufacture, standard and best practices for testing procedures. Similar procedures must be used for all tests.

SECTION 703 - PROJECT CLOSE-OUT

703.1 DEPARTMENT OF LABOR AND INDUSTRY AS-BUILT RECORD DRAWINGS. The Small GESA's Professional is responsible for submitting to the Pa. Department of Labor and Industry a revised set of Construction Documents for approval for changes made during construction that are not in accordance with the approve Construction Documents. This revised set of Construction Documents shall be referred to as 'L&I As-Built Record Drawings' and shall be submitted in accordance with L&I UCC requirements.

703.2 DGS AS-BUILT RECORD DRAWINGS. Within ninety (90) days from the Final Inspection of the Project, the Small GESA's Professional shall submit Record Drawings on disc(s) showing all changes from the Construction Documents made during the course of construction. The Record Drawing shall indicate the vertical and horizontal alignment of concealed pipes, conduits and similar items. Recorded changes shall be obtained from clearly marked field prints provided by the Small GESA Contractor and field office. The As-Built Record Drawings shall be on disc(s) in .pdf format and shall be identified as "Record Drawings", shall be delivered to, and shall become the sole property of, the Department.

703.3 OPERATION/MAINTENANCE MANUAL. After Final Inspection the following should be collected from the Small GESA Contractor: all shop drawings, catalog data, manufacturer's operating and maintenance instructions, warranties, guaranties, certificates, test reports and other material pertinent to operating and maintaining the facility. They must be correlated and indexed, into an organized Operation/Maintenance Manual by the Small GESA Contractor. The Small GESA's Professional must review the Operation/ Maintenance Manual for completeness and accuracy. If unacceptable, it is to be returned to the Small GESA Contractor with specific criticisms. If accepted, forward to a copy of all discs to DGS and one copy of all discs to the Funding Agency with all the information in .pdf format.

703.4 CERTIFICATE OF OCCUPANCY. Inspections required by the code enforcement agencies to obtain Certificate of Occupancy must be arranged by the Small GESA's Professional. All permits needed to permit occupancy must be obtained.

CHAPTER 8

MISCELLANEOUS INSTRUCTIONS

SECTION 800 - INTRODUCTION

800.1 INTRODUCTION. This Chapter contains instructions to the Small GESA's Professional on specific topics for which the Department has standards that it wants the Small GESA's Professional to observe, if applicable. Applicability is determined by the nature of the Small GESA project.

SECTION 801 - QUALITY CONTROL AND QUALITY ASSURANCE TESTING

801.1 GENERAL. The Small GESA's Professional is to adopt the DGS system for specifying Quality Control (by Contractor's Quality Control Agency) and Quality Assurance (by the Small GESA's Professional's Quality Assurance Agency) testing and inspection. The Small GESA's Professional is to adopt DGS terminology and approach, with the end result of ensuring that all materials deemed to require testing are tested or inspected to ensure a quality project and to comply with requirements of the UCC, including Special Inspections in Chapter 17 of the IBC.

A. The Department requires that Small GESA's Professionals follow our strict guidelines regarding testing and inspection in the interest of uniformity of administration by our Construction Division. The Small GESA's Professional is to include our Sections 01400 - Quality Control Testing Services, and 01401- Quality Assurance Testing and Inspection Services for structural-related testing and inspections, adopt the Department's program and Project Manual format and terminology, and assign testing and inspection responsibilities to the recommended parties. Non-structural materials and systems which are to be independently tested or inspected are to have the testing specified within the appropriate technical specifications. The Department does not require shop testing during fabrication of structural components, when an appropriate trade association provides independent QC oversight, such as is provided for structural steel fabricators under the AISC Quality Certification Program. The Department does not ordinarily require testing of materials for which manufacturers can provide Certificates of Compliance from independent testing laboratories. These policies are not in conflict with IBC requirements.

801.2 SCOPE. All testing is to be Quality Control Testing (by the Small GESA Contractor's QC Agent) with random check testing under Quality Assurance (by Small GESA's Professional's QA Agent). Quality Control tests shall be required by specific type and frequency or quantity of tests. The exception to this is soils testing which is to be Quality Control with no specified quantities. The Small GESA Contractor is to do whatever testing is required, without limitation, to comply with specification standards. Construction monitoring of earthwork and soils testing is by the Small GESA's Professional's Geotechnical Engineer, who is acting as the QA Agent for soils work.

A. All Special Inspections required by IBC Chapter 17 are to be Quality Assurance (by Professional's QA Agent).

B. When structural Quality Control Testing is required, the technical specification shall refer to Section 01400 for all testing requirements, where types and frequencies of tests shall be listed in detail. Testing requirements shall not be stated on the Drawings, or in the technical specification sections. Detailed descriptions of testing may be included in the specifications where necessary.

C. When structural Quality Assurance Testing or Inspection is required the technical specification shall refer to Section 01401 for all testing and inspection requirements, where types of tests and inspections only shall be listed. Testing and inspection requirements shall not be stated in the technical specification sections.

801.3 QUALITY ASSURANCE TESTING AND INSPECTION SERVICES

A. If Quality Assurance Testing or Inspection is required, the Small GESA's Professional is responsible to provide this service. Based upon Project conditions, the Small GESA's Professional is to authorize check tests and inspection hours during construction as deemed necessary to assure the Small GESA's Professional of contract compliance and as required to comply with the IBC, including Chapter 17 of the IBC. Tests shall be standard tests that are identified by ASTM or other designation. Include any tests that might be taken in order to establish unit prices.

B. The Small GESA's Professional is responsible for directing the Quality Assurance program. It shall solicit advice from Consultants as it deems appropriate. It should direct the testing and inspection in accordance with need, based upon minimum documentation, Contractor performance, Quality Control Agent reports, quality of materials furnished Project conditions and UCC requirements.

C. The Funding Agency inspection staff shall be consulted prior to implementing any action by the Quality Assurance Agent. The purpose of this consultation shall be to bring areas of concern to the Department's attention and assure that all involved parties are aware of the rationale being used. The inspection staff shall also bring to the attention of the Small GESA's Professional any items that may be of concern that would require further review and supplemental testing. Implementation of the Quality Assurance Agent shall be a collective effort that must be closely coordinated between the Small GESA's Professional and the inspection staff.

D. When unsatisfactory test results occur, the Funding Agency Inspector(s) are to confer with the Small GESA's Professional and ensure that appropriate corrective action is initiated.

SECTION 802 - UTILITY REQUIREMENTS

802.1 PURPOSE. The purpose is to outline the procedure for providing utilities on a Small GESA project.

802.2 CONSTRUCTION DOCUMENTS. As soon as practical during the Construction Documents design phase, the Small GESA's Professional shall contact each utility company and obtain, in writing, a final scope of work for service installation, routing plan (includes right-of-way requirements), meter location, and the utility's cost to install its service. The Small GESA's Professional should forward this information along with the utility company point of contact to the DGS Project Coordinator for initiation of a utility agreement(s), which is reviewed and prepared as needed by DGS lawyers. Service arrangements must be completed prior to final submission of the design to DGS for review. The necessary drawings for DGS Legal to prepare easement documents shall be included.

A. Construction documents shall include any terms and conditions that the Small GESA Contractor must coordinate including costs to be paid to the utilities that are not incorporated in a utility agreement(s).

802.3 UTILITY EASEMENTS/AGREEMENTS. All information must go through the Project Coordinator for tracking purposes. The Small GESA's Professional shall provide the DGS Project Coordinator with the final utility company information, including a written legal description of each proposed easements, along with a drawing showing the location of each easement, with the metes and bounds, as well as any other information required by DGS Legal Unit. The Project Coordinator informs

the DGS Legal Unit that a utility easement/agreement(s) must be developed and discusses details and the project schedule, and transmits to Legal the utility company scope of work, the service routing plan (with right-of-way), utility company cost proposal and utility company point of contact. Using this information, Legal develops a utility easement/agreement.

802.4 CONSTRUCTION DOCUMENTS SUBMISSION. The Small GESA's Professional must follow the service requirements of each utility company described in its scope of work. The Professional should show all service work required by the Small GESA Contractor on the contract documents, as well as work provided by the utility company.

802.5 CONSTRUCTION. Service applications are applied for by the Small GESA Contractor on behalf of the Funding Agency, designating the initial payer of use charges according to requirements of the Construction Contract. The Funding Agency will authorize changing the name of the payer at the appropriate time.

SECTION 803 - SUBSURFACE INVESTIGATIONS AND GEOTECHNICAL REPORT

803.1 SCOPE. The Small GESA's Professional shall obtain assistance from its Civil/Structural Engineer as set forth in these instructions and be responsible for obtaining subsurface and related data that will yield sufficient information for an accurate evaluation of the existing subsurface and related conditions for the following purposes:

A. Analysis, design and construction of foundation and substructure.

B. Analysis, design and construction of site work, including embankments, slopes, retaining structures, underground structures, site and subsurface drainage, roads and pavements.

C. Soil erosion and sedimentation control.

D. Cost analysis and estimating of 'Unclassified' excavation.

E. Analysis of excavation and fill conditions.

803.2 CONTRACTING FOR GEOTECHNICAL SERVICES. Geotechnical Services shall include test borings and other subsurface investigation, the Geotechnical Report and Construction Monitoring which shall all be included in the cost of the Small GESA project.

A. Specifications for Test Borings and the Geotechnical Report shall be based upon best practices, and shall include a test-boring plan based upon the proposed footprint of the work and the expected foundation type to be used.

B. The Geotechnical Report shall include specific recommendations for designing structures, slabs on grade and paving.

C. The Geotechnical Consultant shall be required to submit with the Final submission a sealed statement to the effect that the design drawings and specifications are in accordance with his recommendations.

D. The Geotechnical Report shall not contain a broad disclaimer that excuses the consultant of responsibility.

803.3 SUBMISSION OF DOCUMENTS TO THE FUNDING AGENCY. The Final Geotechnical Report shall be prepared, signed and sealed by a Registered Pennsylvania Professional Engineer.

A. Upon completion of the boring contract, the Geotechnical Consultant shall submit to the Small GESA's Professional two (2) electronic copies of a complete report, covering the field work and laboratory testing, with complete analysis of each boring and with recommendations for soil and rock bearing capacities. The Small GESA's Professional shall retain one (1) copy, and submit the other copy to DGS.

803.4 CONSTRUCTION DOCUMENTS SUBMISSION. As part of the Construction Documents Submission, the Small GESA's Professional shall submit a letter stating that this Project was designed in accordance with the recommendations of the Geotechnical Consultant. If exceptions are taken, they must be justified.

SECTION 804 - SPECIAL SITE INVESTIGATIONS

804.1 WETLANDS IDENTIFICATION AND DELINEATION. The Small GESA's Professional's responsibility in site selection and site expansion includes the determination of the presence of wetlands by a qualified wetlands delineation specialist, familiar with state and federal criteria and regulations. DGS will accept a letter from the Small GESA's Professional stating that wetlands are not found on the site. If wetlands are present, the Small GESA's Professional shall submit two (2) copies of the completed study to the Funding Agency.

804.2 ENVIRONMENTAL IMPACT STUDIES. For all projects, the Small GESA's Professional shall make a preliminary Environmental Assessment (EA) to include any environmental and historic/archeological considerations for the Project. If more extensive investigation is required, then the Small GESA's Professional shall prepare an Environmental Impact Statement (EIS) in accordance with the requirements of NEPA. The Professional shall submit two (2) copies on disc of the completed study to the Funding Agency.

SECTION 805 - HAZARDOUS MATERIALS

805.1 PROFESSIONAL'S RESPONSIBILITIES. The Small GESA Project may encompass some kind of hazardous material (Asbestos, Lead, PCB, Radon, etc.) The Small GESA's Professional is responsible for addressing hazardous materials to the extent they may impact the Project, as more fully described in the project-specific RFP for each Small GESA project.

805.2 ACT 287, UTILITIES. The Small GESA's Professional shall comply with the current Act 287 (amended by Act 187 of 1996), and PA One Call provisions. The Small GESA's Professional shall contact the institutions and utility companies for location and identification of utilities on project site prior to survey. The surveyor shall identify and record PA One-Call paint marks on the survey.

SECTION 806 - SUBSURFACE UTILITY ENGINEERING

806.1 SCOPE. The Small GESA's Professional shall determine if Subsurface Utility Engineering is necessary for development of the Small GESA Project. If needed, Subsurface Utility Engineering shall be provided by the Small GESA's Professional to precisely locate all underground utilities on the construction drawings.

A. Appropriate geophysical prospecting techniques, including radio frequency electro-magnetic, magnetic, acoustic emission sonics, terrain conductivity and ground penetrating radar, shall be used to provide a comprehensive horizontal map and give an indication of vertical position. Select excavation may be used to determine precise depth when the Project requires.

SECTION 807 - FUEL FEASIBILITY STUDY

807.1 COAL FUEL NON-USE JUSTIFICATION. State Act 1990-28 requires that any heating system or heating unit installed in a Commonwealth-owned facility must use Pennsylvania coal as a

source of fuel. The following should also be addressed and expanded when a fuel other than coal is proposed:

A. Using coal as the fuel for the heating system or heating unit would violate existing or reasonably anticipated environmental laws or regulations.

B. Using coal as the fuel for the heating system or heating unit would not be cost effective when compared to using other forms of energy.

C. Using electricity generated primarily from the combustion of coal would be more cost effective when compared to using coal as the fuel for the heating system or heating unit.

D. The principle fuel for the heating system or heating unit would be natural gas from wells located in Pennsylvania or wood from forests located in Pennsylvania, if such fuels were at least as cost effective as using coal as the fuel.

SECTION 808 - PREPARATION OF STANDARD DRAWINGS AND PROJECT MANUALS

808.1 DRAWING STANDARDS. The Cover Sheet, Approval Blocks, and Title Blocks must have the proper names of the approving authorities, the correct names of the Small GESA's Professional and Consultant and the correct Project Number and Title, etc., entered in the appropriate places. Identify on the Cover Sheet the responsibilities of the Consultants.

808.2 PROJECT MANUAL STANDARDS. The Small GESA's Professional shall use DGS standards for Project Manual Cover Page, Table of Contents, List of Drawings, and Division 1 - General Requirements sections.

SECTION 809 - ARCHAEOLOGICAL AND HISTORICAL REQUIREMENTS

810.1 PHMC REVIEW. The Pennsylvania Historical and Museum Commission (PHMC) is required to review all renovation work on State-owned buildings for historical significance and all excavation work for Archaeological significance. All costs associated with this review is to be factored into the project cost. Prior to the Construction Document Submission, the Small GESA's Professional is requested to contact the PHMC for their review of the location and scope of the work.

A. Inquiries shall be directed to:

Bureau of Historic Preservation
Pennsylvania Historical & Museum Commission
400 North Street, Commonwealth Keystone Building, 2nd Floor
Harrisburg, Pennsylvania 17120-0093
Telephone: (717) 783-9926

B. Upon completion of their evaluation, PHMC will provide a response letter to the Small GESA's Professional, either indicating a finding of no significance, or requesting additional information.

809.2 ARCHAEOLOGICAL. For their archaeological review process, PHMC generally needs a map (preferably a portion of a geological survey map) showing the project location and a brief description of any ground-disturbing activity. Even an activity such as parking lot construction can be significant enough to disturb archaeological resources.

A. If PHMC's evaluation indicates a potential for archaeological resources, they may ask for a Phase I survey to identify any archaeological resources at the project location. The survey must be done by a person or persons whose qualifications meet certain requirements. PHMC has a list of some qualified people, but this list is not exclusive.

B. Based on the results of the Phase I survey, PHMC may ask for a more intensive Phase II survey to evaluate the archaeological resources at the project location. In some cases, PHMC may then ask for a Phase III survey to mitigate adverse effects to the site.

809.3 HISTORICAL. After initial contact with the applicant, PHMC checks whether the building is on or is eligible for the National Register. A survey form is used to determine eligibility. The Small GESA's Professional shall complete the form to the best of their ability; a historical analysis or survey is not required for this.

A. If National Registry eligibility is determined, PHMC reviews the Project based on the Secretary of the Interior's Standards for Rehabilitation. Each step in the review process may take up to thirty (30) days.

CHAPTER 9

DGS SPECIFICATIONS REQUIREMENTS

SECTION 900 – INTRODUCTION

900.1 PURPOSE. This Chapter contains technical guidelines and requirements documents for reference or use by the Small GESA's Professional. Follow the instructions preceding each document on the specific recommendations or requirements for use of that document.

SECTION 901 - DIVISION 1, GENERAL REQUIREMENTS

A. All Division 1 – General Requirements Sections may be downloaded from the DGS Internet website at www.dgs.state.pa.us.

B. The Small GESA's Professional must edit the sections to add, delete or modify provisions to suit the Small GESA project. Each Section, as presented here, includes notes to the specification writer. Remove 'Notes to Specification Writer' as part of the editing process. Do not make changes simply to have the Requirements conform to the Small GESA's Professional's own preferred format or content.

C. Adding/Deleting Sections: Delete Sections not applying to the Small GESA project. Add Sections to incorporate requirements needed for the project that are not covered in the standard Sections. Do not add requirements without verifying that the requirement is not covered in the General Conditions. Do not use Division 1 sections of other published specifications, which may have conflicts with the DGS standard General Conditions of Contract, Division 1 – General Requirements, and Bureau of Construction Administrative Procedures.

D. Do not edit sections to modify provisions of the General Conditions without specific authorization of DGS.

SECTION 902 - EARTHWORK SPECIFICATIONS

902.1 DGS REQUIREMENTS. There is to be only one earthwork specification in the Project Manual. Where Sitework or other General Construction specifications require earthwork, it should be specified by requiring compliance to the main earthwork specification. If there is any special earthwork or concrete work requirements not covered by the Earthwork specification, they should add these special requirements to their sections without nullifying the requirements of the Earthwork specification.

A. BASIS OF CONTRACT

1. Excavation for this Project shall be considered unclassified and shall include all types of earth and soil, any pebbles, boulders, and bedrock, municipal trash, rubbish and garbage and all types of debris of the construction industry such as wood, stone, concrete, plaster, brick, mortar, steel and iron shapes, pipe, wire, asphaltic materials, paper and glass. Unclassified excavation does not include unforeseen concrete foundations, walls, or slabs. All such materials encountered which are identified by this paragraph as unclassified shall be removed to the required widths and depths to create a finished product as shown and/or noted on the drawings and as written in the specifications. No additional compensation shall be made to the contractor for this unclassified excavation. The materials defined by this paragraph as unclassified will not be considered to be concealed conditions or unknown physical conditions below the surface of the ground for purposes of interpreting the language in the General Conditions of the Construction Contract.

B. SUBSURFACE INFORMATION

1. Any available data concerning subsurface materials or conditions based on soundings, test pits or test borings, has been obtained by the Funding Agency for its own use in designing this Project. The Test Boring logs contained within the Geotechnical Report are incorporated into the construction contract as a Contract Document. The remainder of the Geotechnical Report, with all other exhibits, is available for informational/guidance purposes only.
2. Test Boring logs reflect the conditions at the specific locations of each Test Boring only. The Funding Agencywill not be responsible in any way for the consequences of failure to conduct such investigation. Excavation for the Project is "Unclassified", as fully described in the Earthwork Section.

C. APPROVAL OF BEARING STRATA

1. The Small GESA Contractor shall furnish adequate advance notification to the Funding Agency and the Small GESA's Professional of times when footing excavations are to be completed, so that the bearing quality of bottoms may be inspected and/or tested and approved. Formwork and concreting shall follow only after this approval.
2. If the bearing at the levels indicated be found by the Small GESA's Professional and the Funding Agency to be inadequate, they may order the excavation carried down to sound bearing. If suitable bearing is found at a lesser depth than indicated, the Small GESA's Professional and the Funding Agency may order the reduction of excavation specified or shown on the drawings.

D. QUALITY CONTROL TESTING

1. The Small GESA Contractor shall perform all necessary Quality Control tests and procedures for the performance of the work in accordance with Section 01400 and this section, to produce end results specified. The Small GESA Contractor shall maintain clear and orderly records of such tests and procedures and make them available for field review and approval of the Small GESA's Professional and the Department.
2. Quality Control tests shall include tests on fill material, optimum moisture content and maximum density and field density tests of fill layers. The Q.C. Testing agent shall comment on the suitability of all subgrades, and the subgrades shall be acceptable to the Q.A. Agency.
3. Handwritten copies of field test reports shall be provided to the Contractor. They shall be given to the Contractor and inspector within two (2) hours of completion, but in no event shall the technician leave the site without providing the Contractor and inspector with a copy of the test results. This shall include density, % moisture, plan location, elevation, comments and any other relevant data. Comments shall include any condition that might have an adverse effect on the operations, including weather, drainage, etc.
4. The Small GESA Contractor shall request consultation with the Consulting Geotechnical Engineer on any problems that arise during construction. Copies of the daily in-place soil density tests shall be emailed to the consultant by the Contractor through the testing agency within twenty-four (24) hours of the time the tests are made.
5. The Small GESA Contractor shall approve each subgrade and each fill layer before proceeding to the next layer. Any area which does not meet density, % moisture or other requirements at any time, shall be suitably reworked and retested by the Contractor at his own expense.
6. The Professional and/or the Funding Agency will perform Quality Assurance tests in accordance with Section 01401 deemed necessary for the assurance of the Small GESA's Professional and/or the Funding Agency. This does not relieve the Contractor of his responsibilities.

E. Compaction standards are to be based on Modified Proctor standards, as defined by ASTM D1557.

SECTION 903 - CAST-IN-PLACE CONCRETE SPECIFICATIONS

903.1 DGS REQUIREMENTS. The cast-in-place concrete specification should be based upon requirements of ACI 301, except samples are to be taken and broken by the Quality Control Agent for each 50 cy. Slump tests and recording of temperature is to occur for each truckload. Air tests are to occur with each sampling that contains air. See recommended tests in table in Section 01400. As with earthwork, there is to be only one Cast-In-Place Concrete specification in the Project Manual. Follow the instructions in paragraph 1402.1 on adding a paragraph in Section 01040. Also, we want to include a

penalty for accepted under-strength concrete. Include the following language in the cast-in-place concrete specification:

> "If the structural members are accepted on the basis of tests other than the original cylinder tests, the Contractor shall compensate DGS for the Contractor's failure to meet specified strength requirements by paying to DGS one hundred ($100) dollars per cubic yard for each one hundred pounds per square inch below the specified strength. The original laboratory-cured 28 day test cylinder results only shall be used to determine the difference between specified and furnished strengths."

SECTION 904 - UNIT MASONRY ASSEMBLIES SPECIFICATIONS

904.1 DGS REQUIREMENTS. In order to avoid the requirement in Chapter 17 – Special Inspections of the IBC for "continuous" inspection of grout placement in CMU cores, the specifications shall require that the Small GESA Contractor mark in an approved manner the location of filled cores for the QA Agent to verify the presence of reinforcing steel using a rebar locator and the presence of grout using an ultrasound device.

SECTION 905 - STRUCTURAL STEEL SPECIFICATIONS

905.1 DGS REQUIREMENTS. In order to avoid the requirement in Chapter 17 – Special Inspections of the IBC for "continuous" inspection of high-strength bolting in slip-critical connections, the Small GESA's Professional shall require the Small GESA Contractor to use Direct Tension Indicator Washers or Twist-Off bolts or other systems providing visual verification of proper tightening. Require the Small GESA Contractor's QC Agent to provide field proof of appropriate tightening methods and calibration of the Contractor's equipment as necessary to ensure compliance. This shall be approved by the Small GESA's Professional and its QA Agent.

SECTION 906 - ARCHITECTURAL SPECIFICATIONS

906.1 PURPOSE. To specify construction materials, methods and/or contract requirements, determined to benefit the Funding Agency and required to be included in all applicable projects. The following provisions are to appear in all specifications, unless obviously inapplicable.

906.2 ROOFING WARRANTY. The Small GESA's Professional shall include the following paragraphs in the Roofing Section to specify DGS requirements regarding the Contractor's warranty for roofing work.

A. Quality Assurance:

1. Manufacturer Qualifications: The manufacturer shall have a minimum of ten (10) years experience in the production of the type of roofing herein specified, and shall be able to show experience with projects of similar size and complexity.
2. The Installer Qualifications: The installer shall have a minimum of five (5) years experience installing the type of roofing herein specified, on projects of similar size and complexity.

B. Small GESA Contractor's Warranty:

1. Small GESA Contractor's Responsibility: The Contractor shall take, or cause to have taken, any and all corrective measures necessary to keep the roofing system free of all defects, to the satisfaction of the Department, Funding Agency and to maintain the roofing system in a watertight condition. The Contractor shall have the responsibility for said corrective measures for two (2) years after the date of Final Inspection. The Contractor shall be responsible for the removal and replacement of the roofing system, if in the judgment of the Funding Agency, removal and replacement is necessary to keep

the roofing system free of all defects or to maintain the roofing system in a watertight condition. The Contractor shall also repair, or remove and replace, if the **Funding Agency** deems it to be necessary, any part of the building, including the interior, damaged as a result of leaks in the roofing system. The interior of the building includes, but is not limited to, the furnishings and fixtures. There shall be no limit to the Contractor's liability for fulfilling the aforementioned responsibilities.

a. Final Inspection shall include a statement, supplied by the Contractor and signed by an authorized representative of the roofing manufacturer, attesting to the fact that the roofing installation and finished condition is acceptable for warranty by that manufacturer.

2. Exclusions: The Small GESA Contractor shall not be responsible for repairs to, or replacement of, the roofing system, if repairs or replacement is necessary due to a natural disaster, such as lightning, flood, tornado or earthquake.

3. Notification: The Funding Agency will notify the Small GESA Contractor, as soon as reasonably possible, after it has knowledge of defects in the roofing system. Should the Contractor fail to promptly take corrective measures, the Funding Agency may undertake corrective measures. The Small GESA Contractor shall be responsible for any and all expenses incurred by the Funding Agency in undertaking the necessary corrective measures. In addition, the Funding Agency undertaking of corrective measures shall in no way relieve the Contractor of any of the aforementioned responsibilities.

C. Manufacturer's Warranty:

1. The Small GESA Contractor shall provide the Funding Agency with a twenty (20) year warranty, furnished by the manufacturer, which shall warrant that the said manufacturer will repair any leaks in the roofing system, not to exceed the original cost of the installed roof over the life of the warranty, installed by an applicator authorized by said manufacturer.

2. Leaks from the following causes shall be covered by the manufacturer's warranty:

a. Defects in the roofing system material.
b. Workmanship of the authorized applicator.

3. The following exclusions are permitted in the manufacturer's warranty:

a. Natural disasters such as lightning, hail, floors, tornadoes or earthquakes.
b. Damage from traffic or storage of materials on the roof.
c. Structural failure of roof deck, parapet or coping.
d. Infiltration of moisture in, through or around walls, coping or building structure.
e. Movement or deterioration of metal counterflashing or other metal components adjacent to the roof.
f. Damage to the building (other than roofing and insulation) or its components adjacent to the roof.

4. The warranty shall provide that in the event a leak should occur within the warranty period, and if such leak is within the coverage of the warranty, the warrantor will, at no expense to the Funding Agency, make or have made, all necessary repairs to put the roof membrane, base flashing and roof insulation in a dry and watertight condition, using the same materials and specifications as the original application. There will be no limit to the warrantor's liability for making such repairs over the period of the warranty.

5. The warranty shall provide that if, upon proper notification, the warrantor fails to promptly repair the roof, the Funding Agency may make temporary repairs to avoid damage to the facility. Such action shall not be considered a breach of the provisions of the warranty.

6. The Funding Agency shall be permitted to make alterations, additions and repairs to the roof, within the written approved guidelines of the warrantor without jeopardizing the unexpired portion of the warranty's original term.

7. Metal roofs and exposed fasteners shall be warranted against rust. Also, on metal roofs, the manufacturer, upon completion, inspection and written acceptance of the roof installation, shall furnish a warranty covering paint finish against cracking, checking, blistering, peeling, flaking and chipping for a period of twenty (20) years.

SECTION 907 - HVAC SPECIFICATIONS

907.1 PURPOSE. To provide information to assist the Small GESA's Professional in the preparation of contract drawings and specification for the Heating, Ventilating and Air Conditioning systems, and to assure consistency in contract documents to reduce errors of omission and/or commission.

907.2 GENERAL. The Small GESA's Professional shall follow these general guidelines in designing and documenting the HVAC work for all DGS projects.

A. The Professional shall comply with the latest applicable codes, standards and regulations:

1. ASHRAE Handbooks to be used as Industry Standards
2. ASHRAE Published Standards, as appropriate
3. ASHRAE 62 – Ventilation for Acceptable Indoor Air Quality
4. ASHRAE 15 – Safety Code for Mechanical Refrigeration
5. ASHRAE 34 – Number Designation and Safety Classification of Refrigeration
6. ASHRAE 90.1 – Energy Design New Buildings
7. Life Safety Code – NFPA 101
8. NFPA Published Standards, as appropriate
9. SMACNA Standards for Ductwork
10. International Energy Conservation Code
11. PA Air Quality Act, Title 5 (DEP)
12. Pennsylvania L&I Boiler Code
13. Pennsylvania Code – Health Department
14. PA UCC
15. City and Local Codes, as applicable
16. Other codes and regulations determined to be applicable

B. Energy Conservation – To assure energy conservation in design of space heating and cooling systems in new and renovated buildings, the design criteria set forth in ASHRAE Standard 90.1 and the International Energy Conservation Code shall be used, whichever is more stringent.

1. Heat conservation systems to be considered:

a. Heat Recovery Systems
b. Heat Pumps
c. Heat Storage Systems
d. Passive or Active Solar Heating
e. Wind
f. Geothermal

2. No air conditioning system should require a dedicated system for reheat, without approval of the Funding Agency.
3. Areas requiring twenty-four (24) hour cooling should be considered as separate systems.
4. All ductwork shall be specified with a 3% maximum leakage with external insulation.
5. Resistance type heating shall not exceed 40% of heating requirements. Combination systems must be used.
6. Heat pumps shall not provide less than 60% of design heat losses with SEER 11 or greater.
7. An energy analysis is required to assure that the systems and its components use minimum energy. Specifications should require this from equipment manufacturers.

C. Vibration and Sound Controls: The Professional is to design HVAC systems with vibration and sound controls as appropriate for the spaces involved. The ASHRAE HVAC Application Manual shall be used as a guide for Vibration and Sound Design Criteria. Use of air-conditioning system condensers, especially air cooled units, are to be discussed with the Funding Agency and the DGS relative to sound and vibration criteria. Professional is to monitor design and field changes during construction with the effect of changes on sound and vibration distribution. Contractor shall perform measurements and provide report to Professional for approval.

1. NOTE: The Professional shall consult with the Funding Agency and/or Funding Agency to determine requirements for special usage areas. Special attention shall be taken for such areas as auditoriums, conference rooms, classrooms and hospital patient rooms.

D. Seismic and Wind Restraint Design is required by Code and is to be designed using ASHRAE HVAC Application Manual for guidance.

E. The Professional shall present in his documents flow diagrams for all air systems, indicating hot and chilled water distribution, outside air, exhaust air, supply air and air movement within buildings and spaces. An air flow diagram is to be included in Construction Documents and all subsequent Submissions.

907.3 HVAC SPECIFICATION GUIDE. Guide information and direction may be distributed to the Small GESA's Professional by the E/A during design.

A. A complete HVAC specification outline shall be provided with the Construction Documents Submission. See Chapter 9 for more specification format information.

B. All engineering analysis and computations, drawings, specifications and other documents shall be prepared by a Registered Professional Engineer, or under the responsible supervision of a Professional Engineer, and must bear the Small GESA's Professional seal and signature of the Engineer.

C. The Professional is to design to good engineering practices. The Funding Agency reserves the right to direct the Small GESA's Professional to use materials, systems, performance characteristics, or equipment that it determines to be in the best interest of the Funding Agency, Project, and/or DGS even if beyond the code requirements.

907.4 BALANCING AND ADJUSTING HVAC SYSTEMS. The following paragraphs are intended to guide the Small GESA's Professional in preparing the Testing and Balancing (TAB) specifications.

A. The balancing firm's report shall include a section which will provide all information regarding all problems encountered prior to, during and remaining after test and what action should be taken to correct the problem(s).

B. The Professional must review and approve the final test report. Should problems remain to be resolved, the Small GESA's Professional shall submit the reports for DGS review, with comments as to the nature of the problem and acceptability of the system(s) and/or action which may need to be taken.

C. No Final Reports shall be submitted which indicate that the system(s) is incomplete, inoperative or that unresolved problems exist.

D. Specification for the testing shall include:

1. The Small GESA Contractor shall provide as part of this contract the services of an independent testing and balancing firm as listed by the Associated Air Balance Council (AABC), NEBB or a qualified firm as approved by the Funding Agency or the Small GESA's Professional. The Small GESA Contractor will be responsible for all balancing work.
2. The Small GESA Contractor and its selected and approved balancing firm shall report to and review the work required with the Small GESA's Professional prior to beginning of work. At least two (2) 1-day inspections of the Hydronic and Air Systems at appropriate times during construction shall be made by the balancing firm and it shall report its findings to the Small GESA's Professional and DGS in a written report. The Professional shall impose upon the Small GESA Contractor that all openings, pressure taps, wells and closures required, over and above those shown on the drawings, to perform the required test and adjustments shall be installed during or after construction at no additional cost to the Funding Agency.
3. The Small GESA Contractor shall furnish all services for a minimum of two (2) complete adjustments of water systems and air handling and exhaust systems, water and air distribution and controls, for the first cooling season and for the first heating season after the job is in complete operation under load conditions.
4. During all tests, it shall be demonstrated that the systems are free from leaks and that all parts of the system will operate correctly. The Balancing Firm shall make final adjustments to all equipment and controls as may be required for proper operation, maintaining correct temperatures in all parts of the building. Controls shall be adjusted by the control manufacturer's mechanics, on the advice of the balancing firm.
5. The final test report shall include appropriate reference to all problems regarding the system(s) encountered prior to, during and after testing and what action should be taken to correct the problem(s), including noise and vibration.
6. The following work shall be included in the project by the Small GESA Contractor:
    a. Supervise the balancing of all water circulation systems and parts thereof installed under this contract to obtain the water quantities and temperature drops in all parts of the system specified in the plans and in the specifications.
    b. Supervise the balancing of the air conditioning and ventilating systems to achieve the air quantities specified at each air inlet, outlet and damper shown on the plans at the proper conditions of static pressure and temperature differential. Conduct all leakage tests on ductwork in a manner acceptable to the Small GESA's Professional and the Funding Agency. Leakages shall not exceed 3% of total air to be delivered.
    c. Study and report on noise and vibration problems, which may develop in the course of system balancing.
    d. Submit reports on the cooling and heating water circulating systems, ATC system, and heating and ventilating systems. These reports shall certify test methods and instruments used, all readings obtained, temperature and pressure drops, rpm of equipment, amperage of all motors, air quantities at each outlet supply, return and air balancing problems encountered and suggestions. Reports

to be submitted to the Small GESA's Professional and the Funding Agency shall include data on all tests in the form normally used by AABC and NEBB. The reports must however, be varied to suit these specifications. Reports shall include fan and pump curves for the final speeds developed from the fan manufacturer's performance test data for all major equipment, and schematics for ALL systems tested. If the Funding Agency has contracted for Commissioning Services, the Contractor shall conform his forms and reports to the Commissioning Agents requirements. (See Chapter 13).

e. Perform tests on heating systems when the outside temperature is averaging less than 30°F and on cooling systems when the outside temperature is above 80°F.
f. Instruct the building maintenance employees for all shifts as required during the adjusting and balancing period. Obtain signed statements from each employee verifying this instruction has been received by each.
g. Carry out the 'start-up' of the various systems with the Contractor and with any necessary assistance of the equipment manufacturer's representative.
h. Furnish all instruments and provide all instrumentations required to perform the above work. The equipment and instrumentations shall remain the property of the balancing Subcontractor; however, all equipment must be first approved by the Small GESA's Professional before being used on the Project.

907.5 COAL-FIRED BOILERS. If proposing a new coal-fired boiler, contact the project coordinator for associated procedures and requirements.

907.6 PIPE AND DUCT PENETRATIONS. In compliance with the requirements of NFPA 90A, it is essential that the Small GESA's Professional determine and indicate locations of all horizontal and vertical fire separations and the hourly requirement of the separation on the contract floor plans and building services.

A. The Small GESA project plans shall show where ducts, pipes and conduits pierce required fire rated separations with standard symbols for:

1. Duct penetration of vertical separation.
2. Duct or shaft penetrations of horizontal separation.
3. Ceiling dampers for opening protection in a floor-ceiling or roof-ceiling assembly.
4. Location of duct fire dampers.
5. Location of duct smoke detectors.

B. A duct access door shall be specified at each fire damper, turning vane, and ATL sensor location, for inspection and resetting the fire damper. Typical detail(s) shall be shown on the drawings.

C. There may be occasion where ceiling or wall access panels need to be provided to reach duct access doors or above ceiling pipe valves. All access panels shall be shown on the construction drawings and the Small GESA Contractor shall provide the access panels.

D. Duct smoke detectors shall be furnishd, installed and wired by the Small GESA Contractor.

E. When dampers and detectors are to be controlled by a Central Fire Management System, including sprinkler system monitoring, the Small GESA Contractor shall install the dampers and detectors.

G. Approved fire and smoke sealant shall be used at all pipe penetrations of fire rated walls, floors and ceilings.

907.7 ELECTRICAL EQUIPMENT WIRING.

A. Wiring for Heating, Ventilating and Air-Conditioning:

1. All equipment for the heating, ventilating and air conditioning systems shall be furnished and installed under the Small GESA Contrac, including furnishing all labor and materials required for the installation and connection of all electrical power wiring to and for this equipment.
2. In general, all special control equipment required for the heating, ventilating and air conditioning equipment such as water chiller, condenser, condensing units, air handling units, water heaters, pumps and air compressor, will be furnished and installed under the temperature control section of the Small GESA contract.

B. Temperature Control Wiring:

1. All interlocking control wiring in connection with the temperature control system for all heating and air conditioning systems shall be furnished, installed and connected under the Small GESA contract, including providing a source of power and making final power connections at each air handling unit and at each apparatus control panel location where noted on the plans.

907.8 ABOVEGROUND STORAGE TANKS (AST) AND UNDERGROUND STORAGE TANKS (UST). The Pennsylvania Storage Tank and Spill Prevention Act of 1989 dictates all installation, modification, removal and inspection activities related to regulated aboveground and underground storage systems. Therefore, the Small GESA's Professional shall prepare associated specifications and drawings to assure that such storage tanks comply with Pennsylvania Act 1988-32.

A. All removal, installation and repair operations shall employ DEP certified Contractors as required.

B. Upon the discovery of fuel contamination, notify the Funding Agency for direction.

C. Stand-alone projects related to storage tanks shall be performed as a (.6) specialty contract.

D. All utility and regulatory permits, certifications and fees must be addressed and satisfied by the Contractor.

E. Adhere to the following requirements as a minimum:

1. Underground storage tank installation procedures shall in general conform to API recommended practices as well as DEP and PA Labor and Industry codes and regulations.
2. API Recommended Practice No. 1615 – Installation of USTs.
3. API Recommended Practice No. 1604 – Removal and Disposal of USTs.
   NOTE: Installation in Philadelphia County and Allegheny County shall further conform to their respective codes and regulations.
4. Provide STAGE I and STAGE II vapor recovery for gasoline.

F. Tank Requirements:

1. USTs shall be double-wall steel, 360° containment meeting the requirements of STI-P3 and UL 58 or double-wall fiberglass conforming to UL 1316, and be provided with a remote emergency shut off switch, corrosion protection of all ferrous components, vehicle protection, spill containment, and overfill protection and impervious surfaces at fill and dispensing ports.
2. All ASTs shall conform to UL 142 as a minimum and be provided with a remote emergency shut off switch, product line anti-siphon valves, vehicle collision protection, spill containment, protection fence, and overfill protection.

3. Steel USTs shall be protected from exterior corrosion with 125 mils of fiberglass reinforced polyester resin meeting the requirements of ACT 100 or ACT 100U.
4. USTs shall be anchored to an adequately sized reinforced concrete hold-down pad.
5. Containment sumps will be utilized on all UST's with submersible pumping systems.
6. Inventory and leak detection for USTs and piping shall be done electronically.
7. All product lines shall be non-metallic, sloped back to the sump and have secondary containment. Include a provision for leak detection and flow restrictors.
8. The UST interstitial space and dispenser sumps shall be monitored for leaks.
9. Provide drop tube overfill protection and spill containment at fill port.

G. Drawing Requirements – As a minimum, the following information shall be indicated:

1. Site Plan:

   a. Topographic survey of site must conform to the PA Labor and Industry's area requirement stated in the Application for Approval. The plan must further indicate the location of all physical features and utilities, aboveground and underground, relevant to the design, installation and demolition of the fuel facility.
   b. Indicate all USTs, associated piping/conduit systems and island/site facilities scheduled for removal or demolition.
   c. If a site assessment is necessary, develop an Environmental Boring Plan, from a copy of the Site Plan, indicating the location, depth and soil/ground sample tests for each environmental boring around the existing USTs.
   d. Adequate vehicle accessibility, stack-up and entrance/egress patterns must be demonstrated for all anticipated truck types, Commonwealth fleet vehicles and the fuel delivery truck.
   e. Indicate the location, size and content of each UST/AST and the associated excavation/foundation.
   f. Stormwater management must be accommodated with the area affected by excavation or facility construction.
   g. Property lines must be clearly represented.
   h. Indicate the location of any required existing or desired monitor/recovery wells.
   i. UST manholes and sumps should be out of the normal path of vehicle traffic, protected from surface water flooding and designed to be immune from snowplow damage.
   j. The extent and characteristics of all paving work shall be exhibited and defined.
   k. Identify and label all piping/conduit routes.
   l. Indicate all fencing modifications, gate installations and vehicle collision protection features.
   m. Identify apron/canopy size and dispenser island equipment. Slope apron to prevent surface water accumulation.
   n. Indicate the location of all ancillary equipment and systems required to support the location of the fuel facility.
   o. Identify the intended location of Contractor parking, equipment/material storage and excavated soil storage/remediation operations.
   p. Indicate a means for isolating escaped product within the stormwater system.

2. Detail Drawings:

   a. Provide an elevation detail of pipe/conduit penetration of wall/foundation/sumps; specify cross-over intersection and backfill requirements.
   b. Provide an elevation detail of excavation cross-sections indicating all dimensional and shoring/cutback requirements.

c. Provide uniform pea gravel backfill around USTs with a minimum 12" between the UST and the hold-down pad.
d. Provide elevation details of any required monitor/recovery wells.
e. Provide clear and precise details for canopy structure and island foundation.
f. Indicate accommodation for canopy rainwater runoff.
g. Provide elevation details of UST/hold-down pad attachment and pump sumps.
h. Provide an elevation section indicating fill, vent inventory/leak sensor locations, arrangement and interface without the UST/AST.
i. Locate the inventory sensor at the UST/AST midpoint.

3. Site Assessment Program: After accurate topographic and subsurface survey information is gained and integrated onto the Site Plan, the Small GESA's Professional may be asked to perform a site assessment, utilizing the results from laboratory analysis of soil/ground water samples, to determine the extent and constituents of soil/ groundwater fuel contamination. The site assessment program may consist of the following tasks as requested:

a. Development of an Environmental Boring Plan for the Funding Agency's review and approval.
b. On-site placement, direction and drilling of the environmental borings to ascertain the extent of soil and ground water contamination.
c. Professional on-site representation during the boring operations with the ability to perform additional discretionary environmental borings and monitor/recovery wells.
d. Applicable laboratory analysis of soil/ground water samples for specific constituents, existing MTBE and lead concentration from former leaded gasoline USTs. Consider full range target pollutant tests at the locations of new USTs.
e. Samples are not to be homogenized or taken at recurrent boring depths.
f. All results are to be recorded and submitted to the Funding Agency to serve as a baseline reference for the site.
g. Evaluation of current and seasonal high ground water elevations, gradient and soil recharge rates.
h. Provide a site assessment program summary report to include the results of the environmental tests, the testing methodology and an assurance plan from the testing laboratory.
i. If necessary develop DEP required Site Characterization Report and/or Remedial Action Plan based on contamination after report is complete.
j. Interim remedial actions shall be executed upon the confirmation of reportable contamination.
k. The specifications/drawings will direct the Contractor to dispose or remediate a finite amount of contaminated soil.
l. Dewatering the excavation and proper disposal of any captured water, whether contaminated or not, is the Contractor's responsibility.
m. The removal and disposal of contaminated soil and ground water will be supervised by the Small GESA's Professional.
n. Any contamination of an extensive nature, or from other sources, not covered by the drawings or specifications, shall be considered outside the scope of the project. The Professional shall notify DGS and the Funding Agency of the results.

H. Procedure Information:

1. See guide specifications. These shall be used and may be applicable for the specific project requirement.

2. Requirements:

a. Design Stage Procedure:

1) If applicable the Small GESA's Professional shall have the local or L & I Fire Marshal review and comment on proposed UST design and installation procedure with respect to Fire and Safety requirements. File Form SP-FP2 with Plan.
2) Such reviews and comments shall be filed with DGS with the Final Submission.
3) Such comments shall be incorporated into the contract documents.

b. Responsibility:

1) Professional may submit to Labor and Industry for review and comment, the proposed UST/AST design and installation procedure. Include in contract document complete requirement for UST/AST, regarding installation/ removal/registration, etc.
2) Contractor shall file for permit, for the Owner, with the Labor and Industry. The Owner is defined as the Funding Agency on whose property the UST will be installed.
3) Register UST removal, installation and upgrade with DEP and obtain a registration number for each UST.
4) Provide registered certification from tank fabricator.
5) Install/Remove USTs by a certified UST installer/remover.
6) Have inspected, tested and certified by a certified UST Installation Inspector.
7) Submit certified statement regarding compliance with requirements for the proper disposal of tanks required to be removed.

I. Specification Guide Information – The following information shall be incorporated into the UST specifications. The Professional shall review and modify, as necessary, to suit the specific project requirements.

1. The Storage Tank and Spill Prevention Act of 1989:

a. The Pennsylvania Storage Tank and Spill Prevention Act of 1989 regulates all installation, modification, removal and inspection activities related to aboveground and underground storage systems.
b. Each Contractor shall comply with the requirements of the Storage Tank and Spill Prevention Act as it applies to this project.
c. Each Contractor, prior to commencement of any work, regulated by the Act, shall provide to the Funding Agency proof of certification by the Department of Environmental Protection as a certified installer or remover.
d. Each Contractor, prior to commencement of any work, regulated by the Act, shall provide to the Funding Agency proof of certification by the Department of Environmental Protection for the required certified Inspector on this project.

2. Regulatory Submittals:

a. The certified tank installer shall be responsible for notification and/or submittals required by the Pennsylvania Department of Environmental Protection. All notifications and submittals shall be copied and turned over to the Bureau of Construction, which shall file copies with project records and forward copies to the Funding Agency for the purpose of record keeping required by DEP regulations.

b. The Pennsylvania Department of Environmental Protection, Bureau of Water Quality Management Regional Office for this project site is:

3. Soil Testing:

   a. The DEP certified installer shall conduct soil testing after removal of the storage tank(s) and pipe systems to measure for contamination which may have occurred during the operation of the system.
   b. The soil testing shall be conducted in compliance with all DEP and local regulations.
   c. The certified installer shall take separate samples of the soil and test for specific constituents.
   d. Samples shall be tested for presence of specific petroleum hydrocarbons, MTBE and lead at former leaded gas UST.
   e. The certified installer shall submit to DGS the laboratory test results, along with a copy of the methodology of testing, and a quality assurance plan from the testing laboratory.
   f. All analysis shall be conducted by DEP and EPA Methodology when available.

4. Contaminated Materials:

   a. The certified installer shall notify DEP and obtain approval for disposal of contaminated materials. Materials shall be disposed of in accordance with DEP requirements.
   b. The landfill area used for disposal of materials shall be certified to receive and bury materials contaminated by petroleum products. The Contractor shall obtain from DEP, a list of certified landfill sites. The certified installer shall make arrangements with and obtain approval from landfill manager prior to hauling material.
   c. Disposal of contaminated water, sludge, or unusable product (fuel, oil, gasoline) shall be done by a method approved by DEP and the EPA.
   d. The certified installer shall submit copies of all DEP permits, approvals and letters of notification to the Funding Agency.

SECTION 908 - PLUMBING SPECIFICATIONS

908.1 PURPOSE. The purpose is to provide guide information to assist the Small GESA's Professional in the preparation of contract drawings and specification for the various plumbing systems and fire protection system, and to assure consistency in specifications.

908.2 GENERAL INFORMATION. The work covered by this specification includes the Plumbing Contractor furnishing all labor, material, equipment and services and performing all operations in connection with the plumbing installation, complete, in strict accordance with this specification and the applicable drawings.

A. The work includes the following:

   1. A complete system of cold and hot water piping and equipment with valved connections to all water-consuming equipment.
   2. A complete sanitary drainage system with trapped connections to all fixtures and equipment with extensions to 5' beyond the building line.
   3. A complete rainwater drainage system with connections to all rainwater conductors within the building. Plumbing Contractor shall provide roof drains to General Contractor for installation. Roof drain selection shall be coordinated with the roof construction.

4. A complete fire protection system with valved connections, including as applicable; wet and dry standpipe system, sprinkler systems, hose racks, hose valve outlets, siamese connections, and exterior fire hydrants. The Professional shall include and coordinate all sprinkler risers, mains, branch piping, valve stations, and fire pump installations. Any sprinkler requirements that require special attention to layout and location of sprinkler heads shall be noted on the drawings. All hazard classification with flow and area requirements shall also be indicated on the drawings. Results of hydrant flow tests shall be listed on the drawings with the performance date.
5. A complete system of gas piping to all gas consuming fixtures and equipment, including extension to 5' beyond the building line.
6. A complete compressed air system including compressors, accumulators, piping and valved connections to indicated equipment.
7. A complete vacuum system including pumps, piping and valved connections to all vacuum equipment.
8. A complete air-conditioning condensate drainage system with connections to all equipment, with extensions and indirect connections to storm or sanitary sewer system. If the condensate drains are provided under the HVAC Contract, the Plumbing Contractor shall provide appropriate indirect waste connections.
9. Furnishing and installing plumbing fixtures.
10. Furnishing and installing special equipment, complete, including but not limited to water softening equipment, filtering equipment for swimming pools, hydrotherapy pool equipment, and sterilizing equipment.
11. Rough-in only for kitchen, laundry, laboratory and hospital equipment.
12. A complete distilled water system with water still, pumps, piping and valved connections to all distilled water outlets.
13. All screen chambers, oil, grease and lint interceptors and grease traps within the building.
14. Testing, disinfection of water system, adjusting and placing in operation all systems installed.

B. The Professional shall comply with the latest applicable codes and regulations:

1. PA UCC – Pennsylvania Uniform Construction Code.
2. Fire Protection Systems – NFPA
3. Sprinklers NFPA 13
4. Life Safety Code – NFPA 101
5. Accessibility – UCC
6. Pennsylvania Code – Health Department
7. Other codes, standards and regulations, as applicable

C. The Professional is to design to good engineering practices. The Funding Agency reserves the right to direct the Small GESA's Professional to use materials, systems, or equipment that it determines to be in the best interest of the Funding Agency, Project, and/or Commonwealth even if beyond the code requirements.

D. Electrical Equipment Wiring:

1. All equipment, unless otherwise indicated, for the plumbing system shall be furnished under the Plumbing Contract. The Electrical Contractor shall however, be responsible for furnishing all labor and materials required for the installation and connection of all electrical power wiring to and for this equipment.
2. In general, all starters and special control equipment required for electrically operated equipment furnished under the Plumbing Contract, such as the pumps and the electrical water heaters will be furnished and installed by the Plumbing Contractor.

SECTION 909 - ELECTRICAL SPECIFICATIONS

909.1 PURPOSE. To specify construction materials, methods and contract requirements, determined to benefit DGS included in all applicable projects.

909.2 APPLICABLE CODES AND REGULATIONS. Electrical design shall comply with the latest applicable codes:

A. National Electrical Code – NFPA 70

B. National Electrical Safety Code – ANSI C2

C. Life Safety Code – NFPA 10 1

D. Pennsylvania UCC

E. Pennsylvania Code, Department of Health Regulations

F. City or Local Codes, as applicable

G. Accessibility – UCC

H. Other codes, as applicable

909.3 SPREAD OF FIRE, OR PRODUCTS OF COMBUSTION. The design and specifications shall be developed in accordance with the following.

A. All lighting, power, control and fire alarm wiring shall be run in rigid metal conduit, intermediate electrical conduit, electrical metallic tubing, flexible metallic conduit, liquidtight flexible metal conduit, surface metallic raceways, or metal wireways within the parameters established by the National Electrical Code and applicable DGS design parameters.

B. Plastic conduit, which may produce toxic smoke or contribute to the spread of fire, shall not be used without permission from DGS. Plastic conduit installed underground or in concrete encasement will be acceptable.

C. Non-metallic sheathed cable or armored cable is not to be used, except with special permission.

D. All telephone, television, electronic data processing, sound and other telecommunication cables shall be run in conduit as specified above, except as follows:

1. Data processing cables installed under raised floors shall comply with NEC Article 645.
2. Plenum conductors shall be listed as having adequate fire resistant and low smoke producing characteristics. Conductors insulated with materials that produce toxic smoke are not acceptable. The manufacturer of the cable shall certify that its product complies with the above.

909.4 SURGE PROTECTION. All electrical systems susceptible to damage by lightning or other surges shall incorporate surge protection to protect the equipment. The equipment shall be protected from surges on the downstream side of the equipment as well as from surges on the incoming lines. Surge protection shall be specified as factory installed on all input and output terminals where the transmitting control panel is interconnected with other buildings for remote annunciation, alarm or data interface.

909.5 INSTALLATION OF EMERGENCY OR STANDBY GENERATORS. Contract responsibilities for the furnishing and installing of materials and equipment associated with emergency or

standby generators shall be broken down as described below. The project design and specifications shall be developed in accordance with the following.

A. Scope shall include:

1. Furnish and install concrete pad (minimum 6" high), vibration isolators and anchor bolts for the engine generator set(s).
2. Furnish and install the engine generator set(s).
3. Furnish and install the automatic transfer switch(s).
4. Furnish and install associated lighting and power panels, area protection monitors, etc.
5. Furnish pressure regulator(s) for natural gas or LP fueled engines to the HVAC Contractor for installation.
6. Provide day tank(s) for diesel-fueled generators in place. The HVAC Contractor shall do pipe installation, if not factory-installed.
7. Furnish, install and connect power and control wiring to the engine generator set(s) and all associated equipment.
8. Furnish exhaust mufflers to HVAC Contractor for installation.
9. Furnish and install all engine exhaust piping.
10. Install engine exhaust muffler(s) furnished by Electrical Contractor.
11. Insulate all muffler and exhaust line piping.
12. Furnish and install drip loop(s) in exhaust line piping.
13. Furnish and install LP fuel tank, and piping.
14. Furnish and install UST or AST diesel fuel tanks with levelometers and piping.**
15. Furnish, install and connect all natural gas or LP fuel lines; including flexible connectors.

OR

16. Furnish, install all diesel fuel lines, including flexible connectors.**
17. Provide all excavation and backfill required for installation of underground tanks and fuel lines.
18. Furnish motorized intake louver(s)* to General Contractor (GC) for installation. (Wired by Electrical Contractor)
19. Furnish exhaust air louver(s)* to General Contractor for installation.
20. Furnish and install all intake air and exhaust air duct work, including flexible connectors.

* Finishes to be coordinated by the Small GESA's Professional.

** Small GESA Contractor shall comply with the requirements of the Storage Tank and Spill Prevention Act of 1989 and shall be listed by the Department of Environmental Protection as a certified installer.

B. Proper specifications and installation will require close coordination between the Small GESA's Professional, its Consultants, and Project Reviewers of the various design disciplines.

909.6 EMERGENCY AND/OR STANDBY GENERATOR TESTING. Emergency or standby generators shall be tested at full load for four (4) hours using resistance banks.

A. Readings of all pertinent data shall be recorded at ten (10) minute intervals for the first two (2) hours, and at thirty (30) minute intervals for the remainder of the test.

B. In the event that it becomes necessary to abort the test, another full four (4) hour test shall be made after correction of the problem(s).

909.7 MEDIUM VOLTAGE SHIELDED POWER CABLE AND FUEL TESTING. Following are cable and field testing specifications for XLP and EPR cable. The selection of the cable type will be the responsibility of the Small GESA's Professional in concurrence with the Funding Agency.

A. EPR Cable:

1. General :

   a. Scope – This specification covers single conductor, ethylene propylene rubber insulated, shielded and jacketed power cable for use at 5,000 or 15,000 volts, 133% insulation level. Cable shall be rated at 90°C for normal operation; 130°C for short circuit conditions. Cables shall be UL listed and designated MV-90 in accordance with the National Electrical Code.
   b. Standards – The cable shall meet or exceed the industry standards of the latest edition of ICEA-NEMA Standard S-68-516, WC-8 and AEIC Standard CS-6.

2. Cable:

   a. Basic Construction – Cable shall have a single Class 'B' stranded bare copper conductor, extruded semi-conducting conductor screen, ethylene propylene rubber insulation, extruded semi-conducting insulation screen, copper tape shielding and extruded PVC jacket. The cable conductor screen, insulation and the insulation screen shall be manufactured by employing an in-line triple tandem extrusion process.
   b. Conductor – Annealed copper with concentric lay Class 'B' stranding conforming to ASTM B 8 and ICEA S-68-516, Part 2.
   c. Conductor Screen – Extruded layer of semi-conducting ethylene propylene rubber compound shall be applied over the conductor. The DC volume resistivity of the screen shall not exceed 50,000 ohm/cm at 90°C when tested in accordance with AEIC No. CS-6. The conductor screen shall be clean stripping from the conductor and inseparably bound to the overlying insulation.
   d. Insulation – Ethylene propylene rubber with physical and electrical characteristics that comply with the requirements of ICEA Standard S-68-516. The insulation thickness shall be as follows for 133% insulation level.

      5 KV - 115 Mils
      15KV- 220 Mils

      The thickness at any cross-section of the insulation shall not be less than 90% of the specified thickness.
   e. Insulation Screen – Extruded layer of semi-conducting ethylene propylene rubber compound shall be applied over the insulation. The DC volume of resistivity of the screen shall not exceed 50,000 ohm/cm at 90°C when tested in accordance with AEIC No. CS-6. Average thickness shall be in accordance with AEIC.
   f. Metallic Shield – Non-magnetic metallic conducting covering consisting of a 5 mil copper tape helically applied with a minimum overlap of not less than 12.5%.
   g. Cable Jacket – Polyvinylchloride jacket meeting the physical requirements of ICEA. The jacket shall have a minimum average thickness in accordance with ICEA S-68-516.
   h. Identification – The following information shall be permanently printed every 24" on the surface of the jacket.

      1) Manufacturer/Conductor Size
      2) And Type/Insulation Type and
      3) Thickness/% Insulation Level/
      4) Rated Voltage/MV-90/Year of Manufacture

3. Factory Testing and Certification:

a. DC Resistance Test – Conductor DC resistance shall meet the requirements of ICEA S-68-516.
b. AC and DC Voltage Tests – Each reel of cable shall be subjected to AC and DC tests in accordance with Part 6 of ICEA per the cable rated voltage for 133% insulation level. The cable shall be given a five (5) minute AC voltage withstanding test and fifteen (15) minute DC voltage withstand test.
c. Insulation Resistance – Insulation resistance shall be measured and recorded in megohms per 1,000 ft. and when corrected to 15.6^{o}C the series insulation resistance shall not be less the 50,000 megohms per 1,000 ft.
d. Corona Discharge – Each reel of cable shall be given a corona discharge test. The test shall be in accordance with AEIC No. CS-6, latest edition. An X-Y recording graph shall be furnished showing corona test results. The maximum partial discharge allowed is 5 pico coulombs.
e. Certification – For each reel of cable, a certified and notarized factory test report, reel numbers for cable identification with date of manufacturer and testing shall be submitted. Nine (9) copies of this certification and test report shall be submitted through the Project Inspector for approval.

B. XLP Cable:

1. General:

a. Scope – This specification covers single conductor, cross linked polyethylene insulated, shielded and jacketed power cable for use at 5,000 or 15,000 volts, 133% insulation level. Cable shall be rated at 90°C for normal operation; 130°C for emergency overload conditions; 250°C for short circuit conditions. Cables shall be UL listed and designated MV-90 in accordance with the National Electric Code.
b. Standards – The cable shall meet or exceed the industry standards of the latest edition of ICEA-NEMA Standard S-66-524, WC-7 and AEIC Standard CS-5.

2. Cable:

a. Basic Construction – Cable shall have a single Class ‘B’ stranded bare copper conductor, extruded semi-conducting conductor screen, cross-linked polyethylene insulation, extruded semi-conducting insulation screen, copper drain wire shielding and extruded PVC jacket. The cable conductor screen, insulation and the insulation screen shall be manufactured by employing an in-line triple tandem extrusion process.
b. Conductor – Annealed copper with concentric lay Class ‘B’ stranding conforming to ASTM B 8 and ICEA S-66-524, Part 2.
c. Conductor Screen – Extruded layer of semi-conducting cross-linked polyethylene compound shall be applied over the conductor. The DC volume resistivity of the screen shall not exceed 50,000 ohm/cm at 90°C when tested in accordance with AEIC No. CS-5. The conductor screen shall be clean stripping from the conductor and inseparably bound to the overlying insulation.
d. Insulation – Cross-linked polyethylene with physical and electrical characteristics that comply with the requirements of ICEA Standard S-66-524. The insulation thickness shall be as follows for 133% insulation level.

5 KV -	90 Mils
15KV-	220 Mils

The thickness at any cross-section of the insulation shall not be less than 90% of the specified thickness.

e. Insulation Screen – Extruded layer of semi-conducting cross-linked polyethylene compound shall be applied over the insulation. The DC volume of resistivity of the screen shall not exceed 50,000 ohm/cm at 90°C when tested in accordance with AEIC No. CS-5. Average thickness shall be in accordance AEIC.
f. Metallic Shield – Soft drawn uncoated copper wires helically applied over the insulation shield. The drain wire shield shall meet the requirements of ICEA S-66-524, Part 4 and UL 1072; minimum of 5,000 circular mils per inch of insulated conductor diameter. A non-metallic separator tape shall be helically applied over the metallic wire shield.
g. Cable Jacket – Polyvinylchloride jacket meeting the physical requirements of ICEA. The jacket shall have a minimum average thickness in accordance with ICEA S-66-524.
h. Identification – The following information shall be permanently printed every 24" on the surface of the jacket.

1) Manufacturer/Conductor Size
2) And Type/Insulation Type and
3) Thickness/% Insulation Level/
4) Rated Voltage/MV-90/Year of Manufacture

3. Factory Testing and Certification:

a. DC Resistance Test – Conductor DC resistance shall meet the requirements of ICEA S-66-524.
b. AC and DC Voltage Tests – Each reel of cable shall be subjected to AC and DC tests in accordance with Part 6 of ICEA per the cable rated voltage for 133% insulation level. The cable shall be given a five (5) minute AC voltage withstand test and a fifteen (15) minute DC voltage withstand test.
c. Insulation Resistance – Insulation resistance shall be measured and recorded in megohms per 1,000 ft. and when corrected to 15.6°C the series insulation resistance shall not be less than 50,000 megohms per 1,000 ft.
d. Corona Discharge – Each reel of cable shall be given a corona discharge test. The test shall be in accordance with AEIC No. CS-5, latest edition. An X-Y recording graph shall be furnished showing corona test results. The maximum partial discharge allowed is 5 pico coulombs.
e. Certification – For each real of cable, a certified and notarized factory test report, reel numbers for cable identification with date of manufacture and testing shall be submitted. Nine (9) copies of this certification and test report shall be submitted through the Project Inspector for approval.

C. Field Testing:

1. General:

a. Scope – Field testing cables, splices and terminations shall consist of a non-destructive, direct current, dielectric test for insulation of primary cable system using ICEA standard procedure.
b. The Electrical Contractor shall notify the Funding Agency two (2) weeks prior to the date of tests. Tests must be witnessed by representatives of the Funding Agency.
c. Testing shall be by an independent testing firm acceptable to the Funding Agency. Testing is not to be by the Electrical Contractor. All tests shall be made by a qualified field technician especially trained for dielectric testing and interpretation of results and regularly engaged in dielectric testing.

d. The Electrical Contractor shall be responsible for disconnecting and reconnecting existing equipment as required to make these tests.
e. If at any time during the test procedure, the test is stopped due to excessive readings, the installation shall be checked to locate the problems. Corrective measures shall be taken prior to continuing the test.

2. Cable, Splicing and Termination Testing:

a. Scope – All new cables, including all splices and termination, shall be tested after installation prior to being energized. All cables not under test shall be properly grounded and tied to the shield of the cable under test. If it is necessary to repeat a test, the capacitance and absorption current shall be discharged by grounding the conductor for sufficient time to allow complete drainage. If the cable has been energized prior to testing, the capacitance shall be completely discharged by grounding the conductor in an approved manner.
b. Field Testing – Tests performed and recorded shall be of the following types:
   1) Step Voltage Tests for New Cable Circuits
   2) Step Voltage and Time Resistance (Polarization Index) Tests for Existing Circuits
c. An installation having only new cable, splices and termination shall be tested as follows:
   1) 5 KV System – Test to 25 KV DC
   2) 15 KV System – Test to 55 KV DC* (*64 KV DC for cable only)
   3) Under no circumstances is the test voltage to exceed 80% of the manufacturer's original DC over-voltage acceptance test
d. An installation consisting of a combination of new and existing cables, splices and terminations shall be tested as follows:
   1) 5 KV System – Test to 20 KV DC provided the existing system passes the meggar test
   2) 15 KV System – Test to 35 KV DC provided the existing system passes the meggar test
   3) Lower test voltages may be used upon direction from the Funding Agency or DGS
   4) Under no circumstances is the test voltage to exceed 60% of the manufacturer's original DC over-voltage acceptance test
e. The results shall be plotted in the form of a curve on kilovolt-megohm paper.
f. In the step voltage tests, voltage shall be applied evenly to the insulation in ten (10) consecutive steps of a specified magnitude or steps equal to the kilovolt rating (whichever is the lower), starting at a pre-selected and specified initial value. Voltage shall be held at each step for one (1) minute and current readings shall be taken and recorded at the end of each one (1) minute period for each voltage step. For certain very long cables, the test current will not have stabilized at the end of one (1) minute. In these cases, each step shall be held for two (2) minutes or for sufficient time to allow for stabilization of the capacitance and absorption currents. In conducting the test, the voltage shall not be increased or decreased during the time period. At the completion of the step voltage test and when the maximum specified voltage is achieved, the voltage shall be held at this maximum for ten (10) minutes and current readings taken and recorded.
g. In the Polarization Index Test, a specified constant test voltage shall be applied for ten (10) minutes to each conductor, recording insulation resistance at 1/4, 1/2 and 3/4 and one (1) minute and every minute thereafter. The Polarization index (ratio of ten (10) minute insulation resistance to one (1) minute insulation resistance) shall be at least 1.00 to permit application of high potential in the step voltage test.

3. Test Results:

   a. Determination – A determination is to be made by the testing firm field technician as soon as the test is completed, as to whether or not the system should be energized.
   b. Distribution – Nine (9) certified copies of the field test reports shall be furnished to the Small GESA's Professional through the Project Inspector for approval, and shall include the following:

      1) All readings shall be recorded and plotted on kilvoltmegohm paper
      2) A written summary by the tester as to the conditions of the installation, and recommendations relative to the acceptability of the installation.

   c. In the event that the Funding Agency concludes that the test results are marginal, another test shall be run prior to the expiration of the one (1) year bonding period. The test shall be arranged for and paid for by the Electrical Contractor.

SECTION 910 - HAZARDOUS MATERIALS SPECIFICATION

910.1 PURPOSE. Based on past project experience, the Funding Agency has developed the "Protocol Regarding Asbestos, Lead, PCB's/Mercury, Radon and Other Hazardous Materials", which includes guidance specifications for handling of hazardous materials.

910.2 GUIDANCE SPECIFICATIONS. The Funding Agency's Protocol and Guidance Specifications for hazardous materials work include the following:

A. Professional's Responsibilities To The Funding Agency

B. Sample Hazardous Materials Survey RFP Letter

C. Sample Quality Assurance Hazmat Monitoring RFP Letter

D. Guidance Spec for Removal of Asbestos-Containing Materials*

E. Guidance Spec for Disturbance of Lead-Containing Surface Coatings*

F. Guidance Spec for Removal/Disposal of PCB and Mercury-Containing Materials*

G. Guidance Spec for Radon Testing and Mitigation Design*

H. Lead-Based Paint Guidance Note for Drawings*

* Sections D through H are available upon request; contact the DGS Project Coordinator.

910.3 EDITING. These specifications are provided for guidance only, and should not be copied verbatim. Edit specifications accordingly to suit project scope and field conditions. All guidance documents are provided to indicate the level of detail that the Funding Agency is expecting in the Construction Documents. The use of competent qualified individuals should be used for design.

CHAPTER 10

PROJECT INFORMATION EXHIBITS

EXHIBIT	TITLE
Section A	**Submission Checklists**
A1	Construction Documents Submission Checklist

Section B	**Drawing Standards**
B1	Cover Sheet Layout
B2	Cover Sheet Title Block
B3	Standard Sheet Title Block
Section C	**Miscellaneous Items**
C1	List of Regulatory Approvals/Permits – Status Report
C2	Boiler System Test Report
C3	Receipt for Test Boring Result Drawings
C4	Sample Electrical Panel Schedule
C5	Funding Agency Design Submission Approval Form
C6	Exceptions to L & I Special Inspections
Section D	**HazMat Protocol**
D1	Protocol Regarding Asbestos, Lead, PCB's/Mercury, Radon and Other Hazardous Materials

SMALL GESA PROJECT

CONSTRUCTION DOCUMENT SUBMISSION CHECKLIST

Project Number:_____ Submission Date: _____

Project Title: _____

_____

(The Professional shall submit 2 discs with each item listed; if not included, don't submit the disc.)

1	❑ Transmittal Letter (w/ this Construction Documents Submission Checklist attached)	
2	❑ Code Review and Analysis	
3	❑ Project Specifications (bound together as a Project Manual)	
4	❑ All Construction Drawings w/ Cover Sheet	
5	❑ Report Summarizing the Status of All Utilities	
6	❑ List of Required Regulatory Approvals/Permits – Status Report with copies of all applications/approvals	
7	❑ Geotechnical Report and All Other Reports (if applicable)	
8	❑ Letter From Small GESA Contractor's Professional, confirming compliance with Geotechnical Consultant's Recommendations	
9	❑ Final Engineering Calculations: ○ HVAC ○ Plumbing ○ Fire Protection ○ Electrical	
10	❑ Funding Agency's Final Design Approval Letter	

Submit Final Documents to L&I for UCC Review/Approval and Building Permit after you receive the Construction Documents Submission Acceptance Letter from the Funding Agency.

1 3/4" 3/4" 34 1/2" 5" 3/4"

COMMONWEALTH OF PENNSYLVANIA
DEPARTMENT OF GENERAL SERVICES

List Approval Numbers and Dates for each applicable Agency.

HARRISBURG, PENNSYLVANIA

Xxxxxx X. Xxxxxxx, Governor Xxxxxx X. Xxxxxxxx, Secretary

PROJECT NO. D.G.S. 578-12 PHASE 1
ERIE CIVIC HUMAN RESOURCES CENTER
ERIE, ERIE COUNTY, PENNSYLVANIA

(VOLUME OF)

COVER SHEET INSTRUCTIONS

- Cover Sheet layout may be varied as determined by the Project Professional; however, all pertinent information must be included with adjustments, as applicable to particular projects.
- Do not place lists of abbreviations, material legends or symbols on Cover Sheet.
- Include diagrammatic Project Location Map Vicinity Map, and Institutional Map or Campus Plan.

28 1/2"

ARCHITECT / PROFESSIONAL
RIVERSIDE ARCHITECTURAL PARTNERSHIP
1234 MAIN STREET
ERIE, PA

PHONE: (918) 246-3208

STRUCTURAL ENGINEERING CONSULTANT
BIRKENSTOCK ENGINEERS
7890 NORTH SECOND AVENUE
PITTSBURGH, PA

MECHANICAL ENGINEERING CONSULTANT
BUTTONDOWN ENGINEERS
7654 EAST 42ND STREET
JOHNSTOWN, PA

INDEX TO DRAWINGS

CS-1 Cover Sheet

General Construction
Contract No. DGS 578-12 Phase 1.1

CIVIL DWGS.
C-1
C-2

ARCHITECTURAL DWGS.
AHE-1
A-2
A-3

STRUCTURAL DWGS.
S-1
S-2
S-3

H.V.A.C. Construction
Contract No. DGS 578-12 Phase 1.2

HVAC DWGS.
AHE-1
H-2
H-3

Plumbing Construction
Contract No. DGS 578-12 Phase 1.3

PLUMBING DWGS.
P-1
P-2
P-3

FIRE PROTECTION DWGS.
FP-1
FP-2
FP-3

Electrical Construction
Contract No. DGS 578-12 Phase 1.4

ELECTRICAL DWGS.
AHE-1
E-2
E-3

Cover Sheet title block (See full scale sample)

3/4"

CODE APPROVALS

PROJECT LOCATION MAP

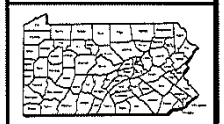

VICINITY MAP

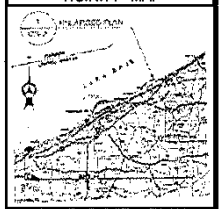

CAMPUS/KEY PLAN

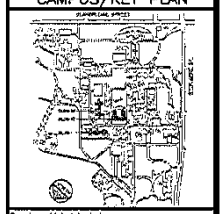

Drawings Listed in Index
APPROVED _____ DATE _____

SEAL

JOHN E. SMITH & ASSOCIATES
ARCHITECTS & ENGINEERS

COMMONWEALTH OF PENNSYLVANIA
DEPARTMENT OF GENERAL SERVICES
HARRISBURG, PENNSYLVANIA

PROJECT NO. D.G.S. XXXX-XX PHASE 1

PROJECT TITLE
PROJECT LOCATION
COUNTY, PENNSYLVANIA
(VOLUME OF)

COVER SHEET

CS-1

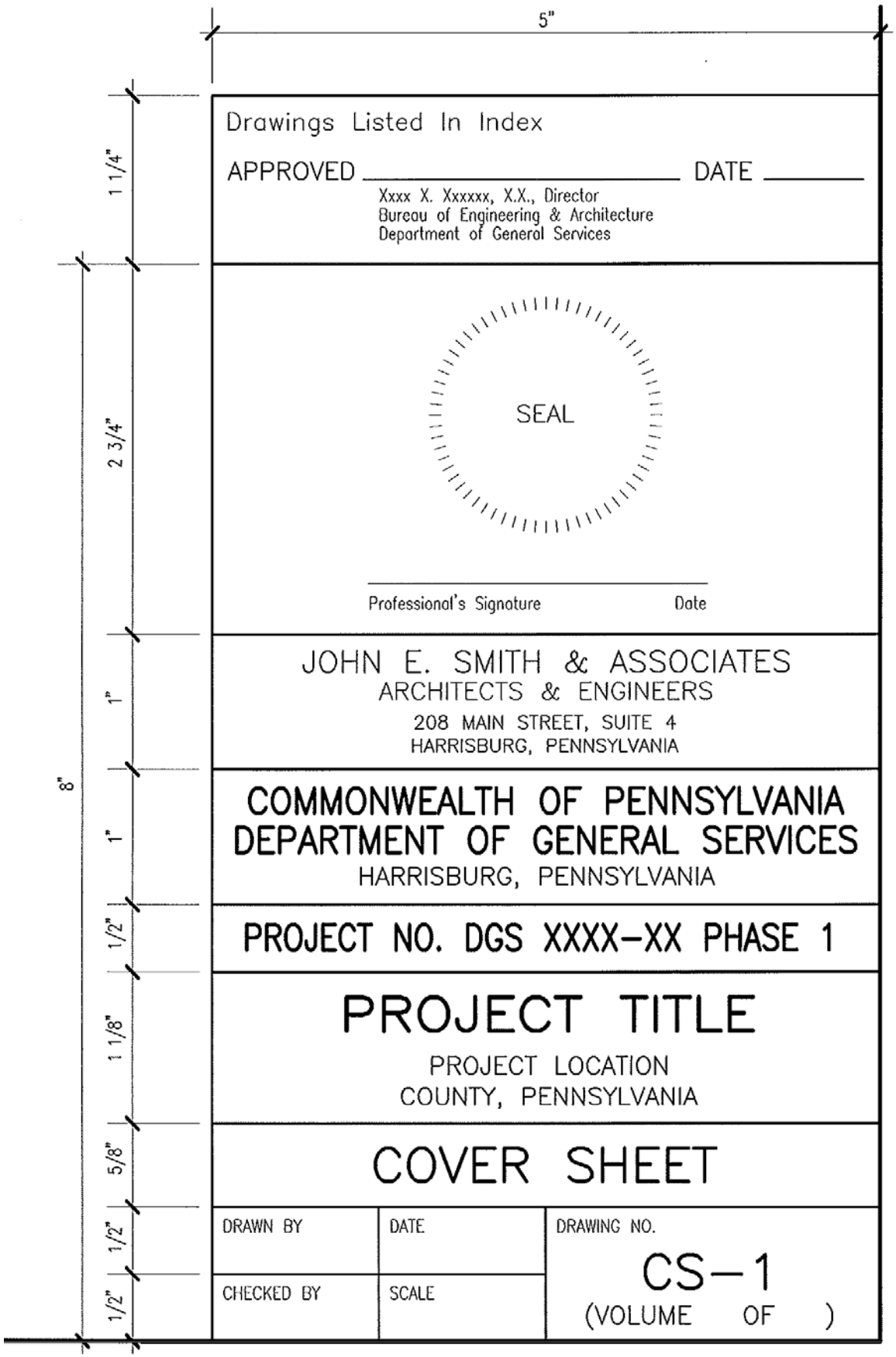

TITLE BLOCK: For use on the Cover Sheet, only. This is a sample. Edit with the correct information for Project No., Project Title and Location, Professional's Name & Address, Director's Name, Date, etc.

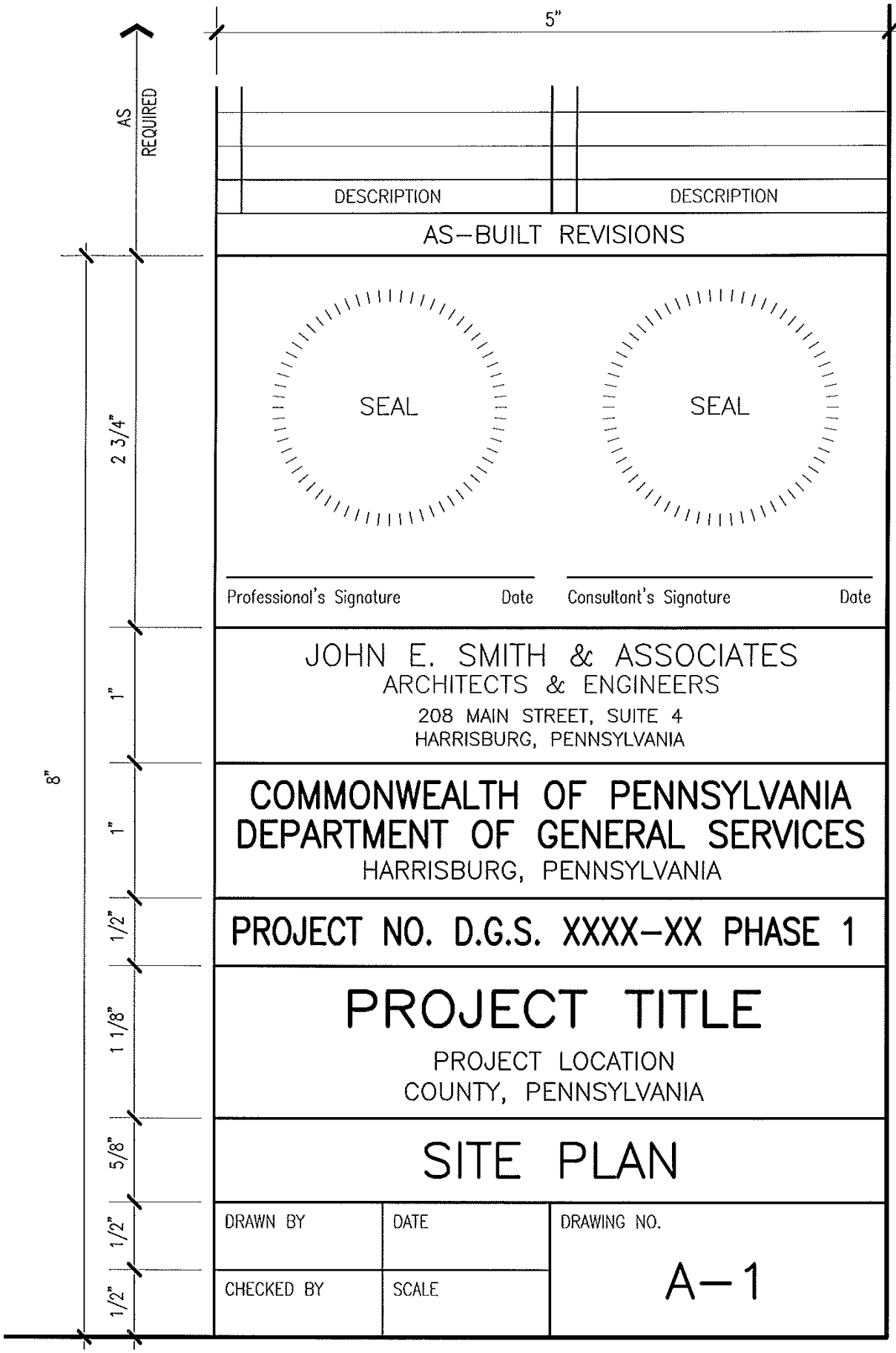

TITLE BLOCK: For all drawings other than the Cover Sheet. This is a sample. Edit with the correct information for Project No., Project Title and Location, Professional's Name & Address, Drawing Title, Drawing No., Date, etc.

LIST OF REGULATORY APPROVALS / PERMITS – Status Report

Project Number: _____ Time Period: _____

Project Location: _____ Funding Agency: _____

Professional Firm: _____

NO.	ITEM	GRANTING AUTHORITY	STATUS REPORT (Incl. anticipated approval date)
1	Local Approvals (as applicable)	Municipality	
2	Zoning Permit	Municipality	
3	Storm Water Mgt. Approval	Municipality/ County	
4	Soil Erosion and Sedimentation Control Permit	Municipality/ County	
5	Land Development Plan/ Subdivision Approval	Municipality/ County	
6	PA. UCC Approval (incl. Building Permit)	L & I	
7	Pa. Natural Diversity Index	D.C.N.R.	
8	Highway Occupancy Permit	PennDOT	
9	Sanitary Sewer Module	D.E.P.	
10	Underground Tanks Approval	L&I/ D.E.P.	
12	Flood Plain Approval	D.E.P.	
13	Wetlands Approval	D.E.P.	
14	Archaeological Approval	P.H.M.C.	
15	Historical Building Approval	P.H.M.C.	
16	NPDES Approval	D.E.P.	

Instructions to Professional: Add additional Permits/Approvals, as applicable, for complete list of all required for the Project.

.

Attach copies of all approval letters, as applicable.

Date: _____

BOILER SYSTEM TEST REPORT

PROJECT NO. D.G.S. _____

_____(Coal, Gas, Oil)_____Boiler

_____(Funding Agency)_____

PREPARED BY:

_____(Name)_____

_____(Representing)_____

REPORT DATE:

_____

SAMPLE GUIDE

Date: _____

REPORT OF BOILER SYSTEM TEST

The attached report of the Boiler System Test of Project Number D.G.S. _____, High Pressure Boiler, ____(Funding Agency and Location) _____, has been prepared for the Department of _____ by _____(Contractor)_____.

SAMPLE

Testing Agent: _____

Witnessed By: _____
(Department of _____)

Approved By: _____
(Professional)

Date: _____

Approved By: _____
(Department of - Agency -)

Date: _____

BOILER SYSTEM TEST REPORT

I. PROJECT IDENTIFICATION

Project No. D.G.S. _____

High Pressure Boiler

_____(Funding Agency)_____

_____(Location)_____

Test Dates: _____

Test Dates: _____

II. SYSTEM DESIGN

A. Equipment (*)

Boiler: (Provide description, model number(s) and serial number(s) of all equipment)

Instrumentation:

Fuel Oil Service Pump:

Chemical Feed System:

(*) For coal fired included all associated system equipment – See _____.

B. Predicted Performance – Boiler/Burner – No. 2 Fuel Oil

	MINIMUM [1]	**MAXIMUM HOUR PEAK**
Actual evaporation, lbs/hr	10,000	70,000
Operation pressure, psig	150	150
Steam quality, %	99.5	99.5
Steam temperature at nozzle, ^{o}F	366	366
Feedwater temperature, ^{o}F	212	212
CO^2 at boiler outlet, %	12.8*	13.4*
Gas temperature at boiler outlet, ^{o}F	410	505
Total weight of exit gas, lbs/hr	11,310	77,955
Fuel burning rate, lbs/hr	650	4,480
Draft loss through boiler, WG	0.17	5.75
BTU release/ft^3 gross furnace volume	7,540	52,160
Efficiency complete unit, %	81.3	82.3

* Air Atomization

SAMPLE

[1] Data is to be provided by the boiler manufacturer and to be included as part of Contractor's bid package – See _____ for coal-fired boiler.

C. Fuel Analysis

Fuel Oil No. 2	
Specific gravity, API	0.844
Viscosity, SSU, @ 60°F	40.6
Sulfur, Wt. %, Maximum	0.15
Weight, lbs/gal	7.030
BTU, as fired	136,544

(Data from Laboratory Analysis)

III. OPERATING DATA – (Data as Result of Test)

Fuel Oil No. 2	
Evaporation	
Maximum lbs/hr	62,000
Minimum lbs/hr	5,000
Average lbs/hr	21,160
Total lbs/96 hrs	2,031.330
Steam Conditions	
Drum pressure, psig	150
Outlet temperature, °F	401
Enthalpy, saturated steam, BTU/lbs	1195.6
Purity, calorimeter, %	99.5
Feedwater Conditions	
Temperature to boiler, °F	224
Enthalpy, feedwater, BTU/lbs	192.17
Blowdown, % (approximately)	10.0
Fuel	
Consumed, gallons	16,452
BTU/gallons	136,544

IV. EFFICIENCY CALCULATIONS (Calculated for Test Data)

A. Fuel Oil No.2

$$\% \text{ Eff.} = \frac{W_s (h - hf) + W_b \times hfl}{V_o \times H_v} \times 100$$

Ws	Weight steam produced, lbs
Wb	Weight blowdown, lbs
Vo	Volume oil, gallons
H	Enthalpy saturated steam, BTU/lbs
Hf	Enthalpy feedwater, BTU/lbs
Hv	Heating value fuel, BTU/gal
Hfl	Enthalpy blowdown, BTU/lbs

SAMPLE

$$\% \text{ Eff} = \frac{2{,}031{,}330\ (1195.6 - 192.17) + 20{,}313\ (173.83)}{16{,}452 \times 136{,}544} \times 100 = 90.7$$

V. OBSERVATIONS (Information Prepared by Testing Agent)

A. The boiler performance test was conducted on _____(Date)_____ and _____(Date)_____, in accordance with the Funding Agency's standard boiler system testing procedures. The primary interest of the test was to determine the ability of the boiler system components furnished and installed under Project No. D.G.S. _____, to satisfy the requirements of the system under normal institutional steam demand. No. 2 fuel oil was burned for the entire ninety-six (96) hour test.

B. A capacity test of approximately one (1) hour duration was run. Difficulty was experienced at peak of _____ lbs. per hour. The lack of sufficient quantity of boiler feedwater resulted in this limitation of capacity.

C. The ninety-six (96) hour test was started at 10:00 A.M. on ____(Date)_____, and ended at 10:00 A.M. on _____(Date)_____. No difficulties were encountered other than the limitation as detailed in Paragraph B.

D. The calculated overall boiler efficiency was 90.7%. This obviously high calculated efficiency is believed related to: (1) the steam flow recorder calibration factor and need to change orifice size and (2) an oil flow meter range below that recommended by the meter manufacturer.

E. Difficulty was experienced in feeding the boiler at near peak conditions while using the existing Funding Agency boiler feedwater system. Peak boiler steam capacity was not obtained.

F. The smoke density of combustion gases was satisfactory and in compliance with DEP regulations.

G. The boiler water chemical control was not satisfactory. Concentrations exceeded recommended control limits throughout the test.

H. The boiler chemical feed system failed on the third day of the test due to cutout of electrical overload in pump motor. Piping restrictions would cause such a condition.

I. The installation, operation and performance of the system components were satisfactory except as follows:

- ❖ Funnel drain to discharge overflow from injector was inadequately sized resulting in flooding boiler room floor. Drain piping size should be increased.

SAMPLE

- ❖ The orifice related to the Bailey steam flow recorder should be changed so as to have the recorded flow read direct without correction factor.

VI. SUMMARY (Information Prepared by Testing Agency)

A. The results of the test were satisfactory with the exception of items listed under VI above. Those items considered to be the responsibility of the Mechanical Contractor should be corrected promptly. Other items of a design nature are offered for consideration by the Authority. Some items are the responsibility of the Funding Agency. All safety controls and lockout devices were tested and found to be satisfactory.

VII. RECOMMENDATIONS (Provided by Design Engineer)

- ❖ Shall verify test results are proper.
- ❖ Shall comment as to action to be taken regarding any noted deficiencies, if any.
- ❖ Shall recommend acceptance or qualified rejection of boiler and provide action to be taken.
- ❖ For coal fired boilers, the Contractor shall obtain from DEP, Bureau of Air Quality Management 'Certification to Operate'. A copy shall be included in report.

VIII. ATTACHMENTS

A. Data sheets, Boiler System Test (for each test day)

B. Steam Flow Recorder Charts (for each test day)

C. Fuel Analysis

D. List of Representatives in Attendance (for each test day)

E. Copy of 'Certificate to Operate'

SAMPLE

SAMPLE ELECTRICAL PANEL SCHEDULE

PANEL NAME:	PANELBOARD "S"	NO. OF POLES:	30
LOCATION:	STORAGE	TYPE:	NQOD
VOLTAGE:	120 / 208V, 3 PHASE, 4 WIRE	BRACING:	10 KAIC SYM
AMPACITY:	100 AMP	MAINS:	100 M.L.O.

LOAD SERVED	COND.	GND.	WIRE SIZE	WIRE NO.	AMPS	POLES	POLE NO.	KW PER PHASE A	KW PER PHASE B	KW PER PHASE C	POLE NO.	POLES	AMPS	WIRE NO.	WIRE SIZE	GND.	COND.	LOAD SERVED
							1	1.0			2							
AHU-2	3/4	10	10	3	20	3	3		1.0		4	3	20	2	12	12	3/4	AHU-1
							5			0.8	6							
EC-1	3/4	12	12	2	20	1	7	1.0			8	1	20	2	12	12	3/4	EC-2
EC-3	3/4	12	12	2	20	1	9		5.5		10	1	20	2	12	12	3/4	EC-4
EXTERIOR RECEPTACLE	3/4	12	12	2	20	1	11			5.5	12	1	20	2	12	12	3/4	CHILLER HEAT TAPE
RECEPTACLES	3/4	12	12	2	20	1	13	5.5			14	1	20	2	12	12	3/4	RECEPTACLES
FOLDING DOOR POWER	3/4	12	12	2	20	1	15		0		16	1	20	2	12	12	3/4	GARAGE DOOR POWER
CLOCK POWER/LIGHT	3/4	12	12	2	20	1	17		1.0	0	18	1	20	2	12	12	3/4	PUMPS CP-2, CP-3
CANOPY LETTERS	3/4	12	12	2	20	1	19	0		0.8	20	1	20	2	12	12	3/4	EXT. LIGHT CONTROL
RECEPTACLES	3/4	12	12	2	20	1	21	1.2			22	1	20	2	12	12	3/4	RECEPTACLES
RECEPTACLES	3/4	12	12	2	20	1	23		1.2		24	1	20	2	12	12	3/4	RECEPTACLES
RECEPTACLES	3/4	12	12	2	20	1	25			1.2	26	1	20	2	12	12	3/4	RECEPTACLES
RECEPTACLES	3/4	12	12	2	20	1	27	0.8			28	1	20	2	12	12	3/4	RECEPTACLES
RECEPTACLES	3/4	12	12	2	20	1	29		5.5		30	1	20					SPARE
BOOKSTORE TRACK	3/4	12	12	2	20	1	31			5.5	32	1	20	2	12	12	3/4	BOOKSTORE TRACK
BOOKSTORE TRACK	3/4	12	12	2	20	1	33	5.5			34	1	20					SPARE
BOOKSTORE TRACK	3/4	12	12	2	20	1	35		0		36	1	20	2	12	12	3/4	LOBBY DISPLAY TRACK
LOBBY DISPLAY TRACK	3/4	12	12	2	20	1	37			0	38	1	20	2	12	12	3/4	LOBBY DISPLAY TRACK
LOBBY DISPLAY TRACK	3/4	12	12	2	20	1	39	0			40	1	20					SPARE
SPARE					20	1	41		0		42	1	20					SPARE
TOTAL KILOWATTS PER PHASE								7.3	6.5	6.3								
								2.0	1.4	1.0								

TOTAL A PHASE KILOWATTS =	9.0	TOTAL A PHASE AMPS =	75
TOTAL B PHASE KILOWATTS =	7.9	TOTAL B PHASE AMPS =	66
TOTAL C PHASE KILOWATTS =	7.3	TOTAL C PHASE AMPS =	61
TOTAL 3 PHASE KILOWATTS =	24.2	TOTAL 3 PHASE AMPS =	67

FUNDING AGENCY DESIGN SUBMISSION APPROVAL FORM

Project Number: _____ Phase _____ Part _____ Date: _____

Project Title: _____

_____

The _____ has completed its review of the Construction Document Submission on the Small GESA Project dated _____, for the above-referenced Project, and hereby accepts and approves the design of the project with comments, if any attached to this sheet

APPROVED BY: _____

Funding Agency Representative Date

_____

Title

cc: Project Coordinator

COMMONWEALTH OF PENNSYLVANIA
DEPARTMENT OF GENERAL SERVICES
HARRISBURG

April 18, 2007

Bureau of Occupational & Industrial Safety
UCC Plans Review Division
7th and Forster Street
Harrisburg, PA 17121
Attn: Mr. Ron Seiler

Re: Special Inspections

Dear Mr. Seiler:

Thank you for meeting with Ron Blauch and Dwight Herrmann on April 12th to discuss Special Inspections. We want to reassure you that we shall continue to demand of our Professionals full compliance with the Code, leading up to the final execution of the Special Inspections and Observations Statement indicating compliance with the approved plans and specifications and all applicable provisions of the UCC.

As discussed, we have summarized Special Inspections items appearing in the 2006 edition of the International Building Code for which we would like clarification of acceptable practice. We propose for your approval the following:

Table 1704.3 Item 2.b Inspection of bolt tightening for slip-critical Connections
If Direct Tension Indicator Washers or Twist-Off bolts or other systems providing visual verification of proper tightening are used, continuous inspection of bolt tightening is not required.

Table 1704.3 Item 5.a.1-3 Inspection of groove and fillet welds
If Liquid Penetrant, Magnetic Particle, Ultrasonic Contact, or Radiographic Examination is performed on fifteen (15) percent of critical welds, continuous inspection of the welding process is not required.

Table 1704.4 Item 3 Inspect embedded bolts where allowable loads have been increased per Para 1912.5
Continuous inspection is interpreted to mean inspection of all installed bolts prior to placing concrete.

Table 1704.4 Item 5 Making cylinders, performing slump and air tests and recording temperature of concrete
Qualified Contractor personnel, with oversight by the Special Inspector, may make cylinders; perform slump and air tests and record concrete temperature.

Table 1704.4 Item 6 Inspection of concrete placement
Inspection of every concrete pour is not mandatory, providing the inspector exercises oversight and approves application techniques. Shotcrete placement is to be continuously inspected.

Table 17041.5.1 Item 4 Inspection of grout and rebar placement in CMU
Continuous inspection of CMU grouting is not required if all grouted cores are marked and twenty (20) percent of the core columns are examined with a rebar locator and ultrasound or drilling to verify grout placement.

Bureau of Engineering & Architecture
Room 203, 18th & Herr Streets, Harrisburg, PA 17125
Phone (717) 787-3709 Fax (717) 772-2036

Table 1704.5 Item 4 Test compaction of controlled fill
The Contractor's independent Quality Control Agent may perform compaction tests under the oversight of the Special Inspector, providing the Special Inspector approves all results and operating procedures and performs random independent check tests.

It is our intent to distribute our final understanding to all parties involved in design or construction of Commonwealth projects who are involved with Special Inspections.

Sincerely,

Gary R. Taylor, P.E.
Director
Bureau of Engineering & Architecture

xc: Tom Rados
Ron Blauch
Dwight Herrmann
Directors File
Central File

Bureau of Engineering & Architecture
Room 203, 18th & Herr Streets, Harrisburg, PA 17125
Phone (717) 787-3709 Fax (717) 772-2036

LABOR & INDUSTRY

BUREAU OF OCCUPATIONAL AND INDUSTRIAL SAFETY
HARRISBURG, PA 17120

717-787-3806 Fax: 717-783-5002 www.dli.state.pa.us

May 07, 2007

Gary R. Taylor, P.E.
Director
Bureau of Engineering & Architecture
Room 203
18th & Herr Streets
Harrisburg, Pa. 17125

Re: Special Inspections

Dear Mr. Taylor,

Please be informed that upon a review of the Bureau of Engineering & Architecture's Special Inspection summary, submitted to this Department on April 18, 2007, we find no opposition to your special inspection program as presented.

It is our opinion that your inspection and test program, as summarized, meets both the spirit and the intent of the 2006 International Building Code chapter 17. However, be advised, that thru the adoption of future triennial code editions, we may have to revisit this matter if the testing and inspection requirements were to change.

If I can be of any further assistance please do not hesitate to contact me at 717-787-2525 of email at rseiler@state.pa.us.

Sincerely,

Ronald Seiler BCO
Chief
Buildings Plan Review Division

Cc: Edward Leister
File

Department of Conservation & Natural Resources

PROTOCOL REGARDING
ASBESTOS, LEAD, PCB'S/MERCURY,
RADON AND OTHER HAZARDOUS MATERIALS

SECTION	TITLE
A.	Small GESA's Professional's Responsibilities to DGS and DCNR
B.	Sample Hazardous Materials Survey RFP Letter
C.	Sample Quality Assurance Hazmat Monitoring RFP Letter
D.	Guidance Spec for Removal of Asbestos-Containing Materials
E.	Guidance Spec for Disturbance of Lead-Containing Surface Coatings
F.	Guidance Spec for Removal/Disposal of PCB and Mercury-Containing Materials
G.	Guidance Spec for Radon Testing and Mitigation Design
H.	Lead-Based Paint Guidance Note for Drawings

APPENDIX K

DCNR - Western Region - Energy Data

Forestry Utility Electricity by Forest District

FD	2012-13	2013-14	2014-15	Total SF	Cost Per SF
Forest Dist #4	$12,118.84	$17,519.47	$13,771.46	41,800	$0.33
Forest Dist #6	$6,687.55	$5,791.18	$5,240.95	16,467	$0.32
Forest Dist #8	$6,366.63	$6,709.87	$6,789.62	18,263	$0.37
Forest Dist #14	$3,468.12	$3,329.41	$2,839.50	16,818	$0.17

Forestry Utility Water & Sewer by Forest District

FD	2012-13	2013-14	2014-15	Total SF	Cost Per SF
Forest Dist #4	$1,784.65	$1,862.38	$1,948.57	41,800	$0.05
Forest Dist #6	$955.65	$812.60	$1,834.79	16,467	$0.11
Forest Dist #8	$1,418.92	$1,295.08	$1,394.93	18,263	$0.08
Forest Dist #14	$518.95	$610.99	$1,225.87	16,818	$0.07

Forestry Utility Heating Fuel by Forest District

FD	2012-13	2013-14	2014-15	Total SF	Cost Per SF
Forest Dist #4	$18,159.95	$18,644.21	$18,365.69	41,800	$0.43
Forest Dist #6	$7,143.63	$7,625.80	$8,408.41	16,467	$0.43
Forest Dist #8	$1,995.83	$1,993.31	$1,037.00	18,263	$0.11
Forest Dist #14	$2,867.40	$1,890.42	$615.39	16,818	$0.17

Forestry Utility Totals by Forest District

FD	Electric 2014-15	Water & Sewer 2014-15	Heating Fuel 2014-15	Total SF	Cost Per SF
Forest Dist #4	$13,771.46	$1,948.57	$18,365.69	41,800	$0.82
Forest Dist #6	$5,240.95	$1,834.79	$8,408.41	16,467	$0.94
Forest Dist #8	$6,789.62	$1,394.93	$1,037.00	18,263	$0.50
Forest Dist #14	$2,839.50	$1,225.87	$615.39	16,818	$0.28

State Park Utility Electricity by Park

State Park	2014 -15	Cabins/Cottages	Campground	WTP	STP	Total SF	Cost Per SF	
Clear Creek SP	$23,437.14	Yes	Yes	Yes	No	320	$73.24	Insufficient data
Cook Forest SP	$57,497.40							Insufficient data
Keystone SP	$34,851.85	Yes	Yes	Yes	Yes	34,320	$1.02	
Laurel Hill SP Com	$52,211.92	Yes	Yes	Yes	Yes	231,870	$2.66	
Moraine SP	$114,460.44	Yes	No	Yes	Yes	101,693	$1.13	
Ohiopyle SP	$66,950.68	Yes	Yes	No	Yes	14,223	$4.71	
Point SP	$144,198.27	No	No	No	No	9,300	$15.51	
Presque Isle SP	$154,648.01	No	No	No	Yes	121,281	$1.28	
Pymatuning SP	$124,013.84	Yes	Yes	Yes	Yes	113,855	$1.09	
Raccoon Creek SP	$74,970.86	Yes	Yes	Yes	Yes	124,378	$0.60	

Park Utility Water & Sewer by State Park

State Park	2012-13	2013-14	2014-15	Total SF	Cost Per SF	
Clear Creek SP						No data given
Cook Forest SP						No data given
Keystone SP	$13,199.57	$17,176.42	$15,460.85	12,289	$1.26	
Laurel Hill SP Com	$9,195.21			89,170	$0.10	
Moraine SP	$22,327.02	$25,094.66	$9,941.49	45,912	$0.22	
Ohiopyle SP	$33,842.99	$33,822.82	$31,487.36	0		No SF data
Point SP	$23,190.48	$18,047.28		0		No SF data
Presque Isle SP	$29,680.89	$33,973.73	$35,823.68	95,417	$0.38	
Pymatuning SP	$123,090.54	$140,529.97	$132,611.28	19,785	$6.70	
Raccoon Creek SP						No data given

Park Utility Heating Fuel by State Park

State Park	2012-13	2013-14	2014-15	Total SF	Cost Per SF	
Clear Creek SP	$14,451.83	$29,353.27	$24,332.01	19,416	$1.25	
Cook Forest SP	$7,269.69	$11,081.47	$11,291.61	8,400	$1.34	
Keystone SP	$2,844.80	$3,593.06	$3,355.50	12,289	$0.27	
Laurel Hill SP Com	$19,137.82	$34,851.40	$19,934.43	89,170	$0.22	
Moraine SP	$14,562.47	$15,484.84	$12,126.44	45,912	$0.26	
Ohiopyle SP	$13,215.43	$33,733.72	$11,281.98	0		No SF data
Point SP	$4,622.66	$3,777.14	$2,759.74	0		No SF data
Presque Isle SP	$41,786.21	$65,250.45	$50,340.85	95,417	$0.53	
Pymatuning SP	$23,881.70	$4,905.61	$16,105.69	19,785	$0.81	
Raccoon Creek SP	$22,531.66	$33,621.98	$11,411.32	53,641	$0.21	

State Park	Electric 2014-15	Water & Sewer 2014-15	Heating Fuel 2014-15	Total SF	Cost Per SF	
Clear Creek SP	$23,437.14	No data	$24,332.01	19,736	$2.42	
Cook Forest SP	$57,497.40	No data	$11,291.61	8,400	$8.19	
Keystone SP	$34,851.85	$15,460.85	$3,355.50	93,218	$0.58	
Laurel Hill SP Com	$52,211.92	$9,195.21	$19,934.43	321,040	$0.25	2012-2013 W&S
Moraine SP	$114,460.44	$9,941.49	$12,126.44	147,605	$0.92	
Ohiopyle SP	$66,950.68	$31,487.36	$11,281.98	14,223	$7.71	
Point SP	$144,198.27	$20,618.88	$2,759.74	9,300	$18.02	Average of previous years W&S
Presque Isle SP	$154,648.01	$35,823.68	$50,340.85	216,698	$1.11	
Pymatuning SP	$124,013.84	$132,611.28	$16,105.69	133,640	$2.04	
Raccoon Creek SP	$74,970.86	No data	$11,411.32	178,019	$0.49	

State Park	Electric 2014-15
Clear Creek SP	$23,437.14
Cook Forest SP	$57,497.40
Keystone SP	$34,851.85
Laurel Hill SP Com	$52,211.92
Moraine SP	$114,460.44
Ohiopyle SP	$66,950.68
Point SP	$144,198.27
Presque Isle SP	$154,648.01
Pymatuning SP	$124,013.84
Raccoon Creek SP	$74,970.86

State Park	Water & Sewer 2014-15
Clear Creek SP	No data
Cook Forest SP	No data
Keystone SP	$15,460.85
Laurel Hill SP Com	No data
Moraine SP	$9,941.49
Ohiopyle SP	$31,487.36
Point SP	No data
Presque Isle SP	$35,823.68
Pymatuning SP	$132,611.28
Raccoon Creek SP	No data

State Park	Heating Fuel 2014-15
Clear Creek SP	$24,332.01
Cook Forest SP	$11,291.61
Keystone SP	$3,355.50
Laurel Hill SP Com	$19,934.43
Moraine SP	$12,126.44
Ohiopyle SP	$11,281.98
Point SP	$2,759.74
Presque Isle SP	$50,340.85
Pymatuning SP	$16,105.69
Raccoon Creek SP	$11,411.32

State Park	Total SF
Clear Creek SP	19,736
Cook Forest SP	8,400
Keystone SP	93,218
Laurel Hill SP Com	321,040
Moraine SP	147,605
Ohiopyle SP	14,223
Point SP	9,300
Presque Isle SP	216,698
Pymatuning SP	133,640
Raccoon Creek SP	178,019

APPENDIX L

Energy Conservation Measures

APPENDIX L

Core Energy Conservation Measures

Note: All items listed below **must** be considered in the RFP response. For any measure that cannot be incorporated into the proposal or is determined infeasible, a detailed explanation must be provided that clearly outlines the financial and technical rationale behind the choice not to include the measure.

Tom Ridge Environmental Center (TREC)

1. Retrofit the building and parks lighting systems to LED.

2. Correct the excessive negative pressure in observation tower, eliminating or reducing the removal of treated air from within the TREC building.

3. Repair/replace the failed fan powered reheat boxes located in the underfloor plenums.

4. Determine the feasibility of adding individual private office temperature controls in lieu of shared controls.

5. Relocate thermostats located on outside walls to interior spaces. Utilize wireless devices where required.

6. Determine the existence of return air ductwork. If return air ductwork exists, optimize the systems to provide outside air only when occupied and in amounts needed to satisfy ventilation requirements.

7. Evaluate the energy intensive lab equipment and determine if energy saving retrofits are possible; consider flow control fume hoods.

8. Repair/replace the heat recovery wheels and ensure they are operating as designed, or

9. Replace the existing exterior central station air handling units that utilize boiler hot water with new gas-fired equipment and variable outside air controls. This will improve operating efficiency and reduce piping losses.

10. Implement occupied/unoccupied temperature control schedules and ensure the HVAC systems are controlled with setback temperatures and reduced outside air ventilation.

11. Replace the existing boilers with new, high efficiency units. The units are problematic and are likely costing the facility excessive service repair and operating costs. If the AHUs are replaced with gas fired heaters, downsize the boilers to provide only the required capacity for the load served.

Maintenance Building

1. Replace lighting with LED.

2. Install a gas-fired radiant tube heating system or bio mass boiler to eliminate the unit heaters.

3. Replace the existing boiler and add heating controls with occupied/unoccupied schedules.

Presque Isle Park – General

1. Consider LED lighting retrofits to all buildings, structures, and exteriors where lighting is used on a regular schedule.

2. Evaluate the individual wastewater treatment plant energy use and operating costs and determine if enough savings exist to help pay for installing pump stations and piping to a central wastewater treatment plant.

3. Evaluate the economic opportunity for wind power generation.

General ECM for the other Parks and Forestry facilities:

1. Retrofit the buildings, parks forestry lighting systems to LED including lighting controls when applicable.

2. Replace/install/upgrade HVAC controls.

3. Replace pumps/motors when applicable.

APPENDIX M

- Installment Purchase Agreement

Installment Purchase Agreement and Payment Schedule

Between

Energy Financial Provider

and

Department of XXXX

This **Installment Purchase Agreement and Payment Schedule** (hereinafter "Agreement") is dated as of the ____ day of _____, 20__ between the Energy Financial Provider [_____], a [State] corporation ("FINANCER") and the Commonwealth of Pennsylvania ("Commonwealth"), acting through the Department of XXXX ("Funding Agency").

WHEREAS, GESA Contractor and Commonwealth will enter into a Guaranteed Energy Savings Contract ("GESA Contract") (Exhibit A) for the implementation of the Energy Conservation Measures ("ECM") at Funding Agency facilities located at YYYY in XXXX County, Pennsylvania,: and

WHEREAS, the FINANCER will provide financing for the GESA Contract and receive payments from Funding Agency in accordance with this Agreement and the Payment Schedule; and

WHEREAS, the GESA Contractor will implement/construct the ECMs and adhere to all terms of the GESA Contract; and

WHEREAS, Funding Agency will approve payments to be made to the GESA Contractor for work satisfactorily completed by the GESA Contractor during the implementation/construction of the ECMs in accordance with the GESA Contract and make payments to the FINANCER in accordance with this Agreement and the Payment Schedule; and

NOW THEREFORE, in consideration of the mutual promises and convenants contained herein, the parties hereto, intending to be legally bound hereby convenant and agree as follows:

1. FUNDING AND PAYMENT FOR GESA CONTRACT

To assure the availability of moneys to pay the GESA Contractor the cost of the GESA Contract for, inter alia, the implementation/construction of the ECMs, the FINANCER has at the request of the Commonwealth, deposited $_____.00 (the "Acquisition Amount") into a segregated escrow account (the "Escrow Account") at _____, (the "Escrow Agent") to be held, invested, and disbursed by the Escrow Agent in accordance with the terms of that certain Escrow and Account Control Agreement dated as of _____ by and among the Financer, Funding Agency and the Escrow Agent (the "Escrow Agreement"). The ECMs will be implemented/constructed by the GESA Contractor at the location specified in the GESA Contract. The GESA Contractor will submit Applications for Payment in accordance with the GESA Contract, and once they are reviewed/approved by Funding Agency, Funding Agency will request disbursement from the Escrow Account for the payment of the cost of the ECMs. The FINANCER shall then make payments to the GESA Contractor for the amount specified by DGS. In the event that the amounts in the Escrow Account are insufficient to pay the costs of the ECMs, Funding Agency shall deposit additional funds into the Escrow Account to eliminate such insufficiency. In the event that the amount in the Escrow Account exceeds the cost of the ECMs (the "Excess Funds"), Funding Agency shall pay such Excess Funds to FINANCER in order for such Excess Funds to be applied as a principal prepayment to the first payment on the Payment Schedule and to each succeeding payment on the Payment Schedule until all of the Excess Funds have

been applied. Upon acceptance of all the ECMs, Funding Agency shall deliver to FINANCER an Acceptance Certificate in the form attached to this Agreement as Exhibit B.

2. TERM

This Agreement will become effective upon receipt of a fully-executed Agreement by all parties. This Agreement will, unless earlier terminated as expressly provided for in this Agreement, continue until all payments set forth in the Payment Schedule attached hereto have been made in full (hereinafter, the "Agreement Term").

3. PAYMENT

Funding Agency agrees to pay to FINANCER, or any assignee of the FINANCER, the payments including the interest portion as specified in the Payment Schedule (Exhibit C) at the office of FINANCER (or such other place as FINANCER or its assignee may from time to time designate in writing). Such payments will be made, commencing on, and thereafter on the dates set forth in the Payment Schedule. Except as otherwise provided in this paragraph, Funding Agency obligation to make the payments shall commence approximately twelve (12) months after the Final Payment has been paid to the GESA Contractor and shall be absolute and unconditional in all events except as expressly provided in Section 4 and Section 19.

Funding Agency reasonable believes that funds can be obtained sufficient to make all payments during the Agreement Term and hereby convenants that it will do all things lawfully within its power to obtain, maintain, and properly request and pursue funds from which the payments may be made, including making provisions for such payments to the extent necessary in each budget submitted for the purpose of obtaining funding, using its best efforts to have such portion of the budget approved and exhausted all available administrative reviews and appeals in the event such portion of the budget is not approved.

It is Funding Agency intent to make payment for the full Agreement Term if funds are legally available therefore and in that regard Funding Agency represents that the use of the ECMs is essential to its proper, efficient, and economic operation.

During the Agreement Term, Funding Agency will, upon the request of FINANCER, annually make available to FINANCER or its assignee current financial statements, budgets, proof of appropriation for the ensuing fiscal period, and such other financial information as may be requested by FINANCER or any assignee relating to the ability of Funding Agency to continue to make installment payments and other sums due under this Agreement.

If payment or other sums owed by Funding Agency hereunder is not paid when due, interest may accrue in accordance with State law.

4. NONAPPROPRIATION OF FUNDS

In the event no funds or insufficient funds are appropriated and budgeted in any Commonwealth Fiscal Period for payments due under this Agreement, then Funding Agency will immediately notify FINANCER or its assignee of such occurrence and this Agreement shall terminate on the last day of Commonwealth's Fiscal Period for which appropriations were received without penalty or expense to Funding Agency of any kind whatsoever. In the event of such termination, Funding Agency agrees to peaceable surrender possession of all ECMs requested by FINANCER in good operating condition, subject to normal wear and tear to FINANCER or its assignee on the date of such termination, packed for shipment in accordance with manufacturer's published specifications and with freight and insurance prepaid to FINANCER's or its assignee's nearest warehouse location in the United States, such location

to be specified by FINANCER or its assignee. FINANCER or its assignee will have all legal and equitable rights and remedies to take possession of the ECMs. Upon such termination, title to the ECMs will revert to FINANCER or its assignee.

If on the thirtieth (30th) day after the commencement of any Fiscal Period, sufficient funds have not been appropriated for the purpose of making all of the payments scheduled to be paid in such Fiscal Period, Funding Agency shall cause to be delivered written notice thereof (a "notice of nonappropriation") to FINANCER or its assignee within ten (10) calendar days after such thirtieth (30th) day. Upon FINANCER's receipt of a notice of nonappropriation this Agreement shall terminate, as of the end of the Fiscal Period just ended; provided, however, such termination shall not become effective as of the end of such Fiscal Period just ended if, within ten (10) calendar days of the thirtieth (30th) day after the end of such Fiscal Period just completed, Funding Agency shall cause to be delivered to FINANCER a written statement to the effect that it reasonably expects sufficient funds for the then-current Fiscal Period to be appropriated for this Agreement, and in such event the term shall continue into the then-current Fiscal Period so long, but only so long, as an appropriation becomes available from which to make the payments.

Notwithstanding the foregoing, Funding Agency agrees that it will not cancel this Agreement under the provisions of this paragraph if any funds are appropriated to it, or by it, for this Guaranteed Energy Saving Act project for the Fiscal Period following the Fiscal Period in which funds were appropriated.

5. AUTHORITY AND AUTHORIZATION

Commonwealth represents, convenants, and warrants that: (a) the execution, delivery, and performance by Commonwealth of this Agreement have been duly authorized by necessary action on the part of Commonwealth; (b) this Agreement has been duly executed and delivered on behalf of Commonwealth and constitutes a legal, valid, and binding obligation of Commonwealth enforceable in accordance with its terms; and (c) Commonwealth has complied with all bidding requirements, where necessary, and by due notification presented this Agreement for approval as a valid obligation on its part. Commonwealth agrees that: (i) Commonwealth will do or cause to be done all things necessary to preserve and keep the Agreement in full force and effect; (ii) Funding Agency has sufficient appropriations or other funds available to pay all amounts due hereunder for the current Fiscal Period; (iii) Funding Agency's obligations hereunder are not guaranteed by the United States of America or any agency or instrumentality thereof; (iv) Funding Agency has not established and will not establish any sinking fund, redemption fund, debt service fund, reserve fund, replacement fund, or similar fund to be used to pay principal or interest composing the payments due hereunder; (v) Funding Agency will take no action that would cause the interest portion of the payments due hereunder to become included in gross income of the recipient for federal income tax purposes under the Internal Revenue Code of 1986, as amended (the "Code"), and Treasury Regulations promulgated thereunder (the "Regulations"), and Funding Agency will take and will cause its officers, employees, and agents to take all affirmative actions legally within its power necessary to ensure that the interest portion of the payments due hereunder does not become included in gross income of the recipient for federal income tax purposes under the Code and Regulations, all as amended from time to time (including, without limitation, the calculation and payment of any rebate required to preserve such exclusion); and (vi) Funding Agency will sign and submit to FINANCER for filing with the Secretary of the Treasury information reporting statements and other information relating to this Agreement at the times and in the forms required by the Code and the Regulations.

6. TITLE

Upon final acceptance of the implemented/constructed ECMs by Commonwealth hereunder, title to the ECMs will vest in Commonwealth; provided however, that (i) in the event of termination of this

Agreement by Funding Agency pursuant to NONAPPROPRIATION OF FUNDS paragraph hereof and delivery of the ECMs to FINANCER or (ii) upon repossession of the ECMs in the event of a default, title will immediately vest in FINANCER or its assignee.

7. SECURITY INTEREST

In order to secure all of its obligation hereunder, Funding Agency hereby (i) grants to FINANCER a first priority security interest in any and all right, title, and interest of Funding Agency in the ECMs and in all additions, attachments, accessions and substitutions thereto, and on any proceeds therefrom; (ii) agrees that this Agreement may be filed as a financing statement evidencing such security interest; and (iii) agrees to execute and deliver all financing statements, certificates of title, and other instruments necessary or appropriate to evidence such security interest. Once all payments set forth on Payment Schedule have been made, then Funding Agency will own the ECMs free and clear of all liens or other encumbrances.

8. PERSONAL PROPERTY

The ECMs are, and will remain, personal property, and will not be deemed to be affixed to or be a part of the real estate on which it may be situated, notwithstanding that the ECMs or any part thereof may be or hereafter become in any manner physically affixed or attached to real estate or any building hereon.

9. MAINTENANCE

Funding Agency, at its own cost and expense, will maintain the ECMs in good operating condition for the duration of this Agreement and will not use or deal with the ECMs in any manner which is inconsistent with any laws or regulations. The ECMs will not be misused, abused, wasted, or be allowed to deteriorate except for ordinary wear and tear resulting from its intended use. Funding Agency agrees to cause the ECMs to be maintained pursuant to manufacturer's standard maintenance specifications and will provide proof of proper maintenance at FINANCER's request.

10. ALTERATIONS

Funding Agency will not make any alterations, additions, or improvement to the ECMs without FINANCER's prior written consent unless such alterations, additions, or improvement may be readily removed without damage to the ECMs.

11. LIENS AND ENCUMBRANCES

Commonwealth shall keep the ECMs free and clear of all levies, liens, and encumbrances except those created under this Agreement. Funding Agency shall pay, when due, all charges which may now or hereinafter be imposed upon the ownership, leasing, rental, sale, purchase, possession, or use of the ECMs, excluding, however, all taxes on or measured by FINANCER's income. If Funding Agency fails to pay said charges when due, FINANCER shall have a right, but shall not be obligated, to pay said charges. If FINANCER pays any charges for which Funding Agency is responsible or liable under this Agreement, Funding Agency shall reimburse FINANCER therefor.

12. RISK OF LOSS; DAMAGE; DESTRUCTION

Upon acceptance of the ECMs, Commonwealth and/or GESA Contractor, as per the terms of the GESA Contract, assumes all risks of loss or damage to the ECMs from any cause whatsoever, and no such loss of or damage to the ECMs or defect therein, or unfitness or obsolescence thereof shall relieve Funding

Agency of their obligation to make payments or to perform any other obligation under this Agreement. In the event of damage to any item or ECM, Funding Agency will immediately notify GESA Contractor and place the same in good repair. If Funding Agency determines that any item of ECMs is lost, stolen, destroyed or damaged beyond repair, Funding Agency will either: (a) replace the same with like ECMs in good repair; or (b) on the next payment Date following occurrence of loss, pay FINANCER or its assignee (i) all amounts for said lost, stolen, destroyed or damaged beyond repair ECM then owed by Funding Agency to FINANCER under this Agreement, including the payment for such item(s) due on such date, and (ii) the proportionate amount of applicable payment set forth in the PAYMENT SCHEDULE.

13. INSURANCE

GESA Contractor will insure against any or all risks in accordance with the GESA Contract. GESA Contractor shall demonstrate to the satisfaction of FINANCER or assignee that adequate insurance is provided. In the event of any loss, damage, injury, or accident involving the ECMs, Commonwealth will promptly provide GESA Contractor with written notice within ten (10) days thereof and make available to GESA Contractor all information and documentation relating thereto.

Upon final acceptance of ECMs and in accordance with Section 6 of this Agreement, title of the ECMs will vest with the Commonwealth. Commonwealth will then self-insure against any or all risks assumed in this Agreement. Commonwealth shall demonstrate to the satisfaction of FINANCER or assignee that adequate self-insurance is provided. In the event of any loss, damage, injury, or accident involving the ECM(s), Commonwealth will promptly provide GESA Contractor with written notice within ten (10) days thereof and make available to GESA Contractor all information and documentation relating thereto.

Upon Commonwealth self-insuring the ECMs, Commonwealth will assume all risks and liabilities for injury to or death of any person or damage to any property, in any manner arising out of possession, use, operation, custody, control, condition or storage of the ECMs by Commonwealth whether such injury or death be with respect to Commonwealth's property or the property of other; provided, however, that said damage or injury results from the negligence of Commonwealth, it agents or employees, and that either Commonwealth agrees to settle such claim or judgment has been obtained against Commonwealth. This Section shall not be construed to limit or waive in any way the sovereign immunity of Commonwealth, liability of which under the Section is limited to amounts in which Commonwealth is otherwise permitted or required to respond in accordance with applicable law.

14. PREPAYMENT OPTION

Upon thirty (30) days' prior written notice from Funding Agency to FINANCER, and provided that there is no Event of Default, or an event with which notice or lapse of time, or both, could become an Event of Default, then existing, Funding Agency will have the right to terminate Funding Agency's continued obligation to make payments as specified in the PAYMENT paragraph and Payment Schedule to FINANCER on the purchase of the ECMs. Under this paragraph, payments up to date of prepayment and the Purchase Price, along with any interest accrued from the date of the last payment will be due to FINANCER on the date of prepayment. Upon satisfaction by Funding Agency of such purchase conditions, FINANCER shall henceforth have no rights, title, and interest in the ECMs. No voluntary prepayment is permitted prior to the date of the first scheduled payment under the Payment Schedule.

15. ASSIGNMENTS

Without FINANCER's prior written consent, Commonwealth will not assign, transfer, pledge, or grant any security interest in or otherwise dispose of this Agreement, the ECMs, or any interest in this Agreement or the ECMs. FINANCER may assign its rights, title, and interest in and to this Agreement, the ECMs and any other documents executed with respect to this Agreement and/or grant or assign a security interest in this Agreement and the ECMs, in whole or in part. Any such assignee shall have all of the rights of FINANCER under this Agreement. Subject to the foregoing, this Agreement inures to the benefit of and is binding upon the heirs, executors, administrators, successors, and assigns of the parties hereto.

Upon assignment of FINANCER's interests herein, FINANCER will cause written notice of such assignment to be sent to Funding Agency which will be sufficient if it discloses the name of the assignee and address to which further payments hereunder should be made. No further action will be required by FINANCER or by Funding Agency to evidence the assignment, but Funding Agency will acknowledge such assignments in writing if so requested.

Notwithstanding the foregoing, no such assignments of FINANCER's interests shall be effective against Funding Agency unless Funding Agency receives notification in writing of said Agreement designating the name and address of any such assign. In compliance with Section 149(a) of the Internal Revenue Code, Commonwealth agrees to affix a copy of each notification of assignment to Commonwealth's counterpart of the Agreement.

NOT BEING THE MANUFACTURE OR VENDOR OF THE ECMs, ANY ASSIGNEE OF FINANCER SHALL BE DEEMED TO HAVE MADE NO WARRANTY OR REPRESENTATION, EITHER EXPRESS OR IMPLIED, AS TO THE VALUE, DESIGN, CONDITIONS, MERCHANTABILITY, OR FITNESS FOR A PARTICULAR PURPOSE OR FITNESS FOR USE OF THE ECMs. In no event shall any assignee be liable for any incidental, indirect, special, or consequential damage in connection with or arising out of this Agreement or the existence, furnishing, functioning, or Funding Agency's use of any item of ECMs or products or services provided for in this Agreement.

16. EVENTS OF DEFAULT BY FUNDING AGENCY

The term "Event of Default," as used in paragraphs 17 and 18, means the occurrence of any one of the following events:

(a) Funding Agency, in accordance with the GESA Contract, fails to make any payment as it becomes due in accordance with the terms of this Agreement, and any such failure continues for sixty (60) days after receipt of written notice of Default; or

(b) Funding Agency fails to perform or observe any other convenant, condition or agreement to be performed or observed by it hereunder and such failure is not cured within sixty (60) days after written notice thereof by FINANCER.

17. REMEDIES BY FINANCER

Upon the occurrence of an Event of Default, and as long as such Event of Default is continuing, FINANCER may at its option, exercise any one or more of the following remedies:

(a) By written notice to Funding Agency, with or without terminating this Agreement, declare an amount equal to all amounts then due under this Agreement, and all remaining payments due for

which funds have been appropriated, to be immediately due and payable, whereupon the same shall become immediately due and payable;

(b) By written notice to Funding Agency, request Funding Agency to, at Funding Agency's expense, promptly return the ECMs to FINANCER in the manner set forth in NONAPPROPRIATION OF FUNDS paragraph hereof, or FINANCER, at its option, may enter upon the premises where the ECM is located and take immediate possession of and remove the same, and Funding Agency hereby expressly waives any damages occasioned by such actions not caused by FINANCER's willful misconduct or negligence;

(c) Sell the ECMs and apply any proceeds of such disposition in the following order: (i) all costs incurred in securing possession of the ECMs; (ii) all expenses incurred in completing the disposition; (iii) any sales or transfer taxes; (iv) the applicable Payment; and (v) the balance of any payments owed by Funding Agency for which funds have been appropriated. Any disposition proceeds remaining after the requirements of clauses (i), (ii), (iii), (iv), and (v) have been met shall be paid to Funding Agency; and

(d) Exercise any other right, remedy or privilege which may be available to it under applicable laws of the Commonwealth of Pennsylvania or any other applicable law or proceed by appropriate court action to enforce the terms of this Agreement or to recover damages for the breach of this Agreement or to terminate this Agreement as to any or all of the ECMs. In addition, Funding Agency will remain liable to the extent not prohibited by law for all convenants under this Agreement and for all fees, other costs and expenses incurred by FINANCER with respect to the enforcement of any of the remedies listed above or any other remedy available to the FINANCER.

18. EVENTS OF DEFAULT BY FINANCER AND REMEDIES BY COMMONWEALTH

If FINANCER, fails to make any payment as it becomes due in accordance with the terms of this Agreement, and any such failure continues for sixty (60) days after receipt of written notice of Default then Commonwealth may pursue any right, remedy or privilege which may be available to it under applicable laws of the Commonwealth of Pennsylvania or any other applicable law or proceed by appropriate court action to enforce the terms of this Agreement or to recover damages for the breach of this Agreement.

19. NOTICES

All notices to be given under this Agreement shall be made in writing and mailed by certified mail, return receipt requested, to the other party at its address set forth herein or at such address as the party may provide in writing from time to time. Any such notice shall be deemed to have been received five (5) days after mailing.

20. NONDISCRIMINATION/SEXUAL HARASSMENT CLAUSE

During the term of this Agreement, the Contractor (i.e., FINANCER) agrees as follows:

(a) In the hiring of any employee(s) for the manufacture of supplies, performance of work, or any other activity required under the contract or any subcontract, the Contractor, each subcontractor, or any person acting on behalf of the Contractor or subcontractor shall not discriminate in violation of the *Pennsylvania Human Relations Act* (PHRA) and applicable federal laws against any citizen of this Commonwealth who is qualified and available to perform the work to which the employment relates.

(b) Neither the Contractor nor any subcontractor nor any person on their behalf shall in any manner discriminate in violation of the PHRA and applicable federal laws against or intimidate any employee involved in the manufacture of supplies, the performance of work, or any other activity required under the contract.

(c) The Contractor and each subcontractor shall establish and maintain a written nondiscrimination and sexual harassment policy and shall inform their employees of the policy. The policy must contain a provision that sexual harassment will not be tolerated and employees who practice it will be disciplined. Posting this Nondiscrimination/Sexual Harassment clause conspicuously in easily-accessible and well-lighted places customarily frequented by employees and at or near where the contract services are performed shall satisfy this requirement.

(d) The Contractor and each subcontractor shall not discriminate in violation of PHRA and applicable federal laws against any subcontractor or supplier who is qualified to perform the work to which the contract relates.

(e) The Contractor and each subcontractor represents that it is presently in compliance with and will maintain compliance with all applicable federal, state, and local laws and regulations relating to nondiscrimination and sexual harassment. The Contractor and each subcontractor further represents that it has filed a Standard Form 100 Employer Information Report ("EEO-1") with the U.S. Equal Employment Opportunity Commission ("EEOC") and shall file an annual EEO-1 report with the EEOC as required for employers subject to *Title VII* of the Civil Rights Act of 1964, as amended, that that have 100 or more employees and employers that have federal government contracts or first-tier subcontracts and have 50 or more employees. The Contractor and each subcontractor shall, upon request and within the time periods requested by the Commonwealth, furnish all necessary employment documents and records, including EEO-1 reports, and permit access to their books, records, and accounts by the contracting agency and the Bureau of Diversity, Inclusion and Small Business Opportunities, for purpose of ascertaining compliance with provisions of this Nondiscrimination/Sexual Harassment Clause.

(f) The contractor shall include the provisions of this Nondiscrimination/Sexual Harassment Clause in every subcontract so that those provisions applicable to subcontractors will be binding upon each subcontractor.

(g) The Contractor's and each subcontractor's obligations pursuant to these provisions are ongoing from and after the effective date of the contract through the termination date thereof. Accordingly, the Contractor and each subcontractor shall have an obligation to inform the Commonwealth if, at any time during the term of the contract, it becomes aware of any actions or occurrences that would result in violation of the provisions.

(h) The Commonwealth may cancel or terminate the contract and all money due or to become due under the contract may be forfeited for the violation of the terms and conditions of this Nondiscrimination/Sexual Harassment Clause. In addition, the agency may proceed with debarment or suspension and may place the Contractor in the Contractor Responsibility File.

21. CONTRACTOR INTEGRITY PROVISIONS

It is essential that those who seek to contract with the Commonwealth of Pennsylvania ("Commonwealth") observe high standards of honesty and integrity. They must conduct themselves in a manner that fosters public confidence in the integrity of the Commonwealth procurement process.

(a) DEFINITIONS. For purposes of these Contractor Integrity Provisions, the following terms shall have the meanings found in this Section:

1. "**Affiliate**" means two or more entities where (a) a parent entity owns more than fifty percent of the voting stock of each of the entities; or (b) a common shareholder or group of shareholders owns more than fifty percent of the voting stock of each of the entities; or (c) the entities have a common proprietor or general partner.
2. "**Consent**" means written permission signed by a duly authorized officer or employee of the Commonwealth, provided that where the material facts have been disclosed, in writing, by prequalification, bid, proposal, or contractual terms, the Commonwealth shall be deemed to have consented by virtue of the execution of this contract.
3. "**Contractor**" means the individual or entity, that has entered into this contract with the Commonwealth.
4. "**Contractor Related Parties**" means any affiliates of the Contractor and the Contractor's executive officers, Pennsylvania officers and directors, or owners of 5 percent or more interest in the Contractor.
5. "**Financial Interest**" means either:
    i. Ownership of more than a five percent interest in any business; or
    ii. Holding a position as an officer, director, trustee, partner, employee, or holding any position of management.
6. "**Gratuity**" means tendering, giving, or providing anything of more than nominal monetary value including, but not limited to, cash, travel, entertainment, gifts, meals, lodging, loans, subscriptions, advances, deposits of money, services, employment, or contracts of any kind. The exceptions set forth in the Governor's Code of Conduct, Executive Order 1980-18, the 4 Pa. Code §7.153(b), shall apply.
7. "**Non-bid Basis**" means a contract awarded or executed by the Commonwealth with Contractor without seeking bids or proposals from any other potential bidder or offeror.

(b) In furtherance of this policy, Contractor (i.e., FINANCER) agrees to the following:

1. Contractor shall maintain the highest standards of honesty and integrity during the performance of this contract and shall take no action in violation of state of federal laws or regulations or any other applicable laws or regulations, or other requirements applicable to Contractor or that govern contracting or procurement with the Commonwealth.
2. Contractor shall establish and implement a written business integrity policy, which includes, at a minimum, the requirements or these provisions as they relate to Contractor activity with the Commonwealth and Commonwealth employees and which is made known to all Contractor employees. Posting these Contractor Integrity Provisions conspicuously in easily-accessible and well-lighted places customarily frequented by employees and at or near where the contract services are performed shall satisfy this requirement.
3. Contractor, its affiliates, agents and employees and anyone in privity with Contractor shall not accept, agree to give, offer, confer, or agree to confer or promise to confer, directly or indirectly, any gratuity or pecuniary benefit to any person, or to influence or attempt to influence any person in violation of any federal or state law, regulation, executive order of the Governor of Pennsylvania, statement of policy, management directive or any other published standard of the Commonwealth in connection with performance of work under this contract, except as provided in this contract.
4. Contractor shall not have a financial interest in any other contractor, subcontractor, or supplier providing services, labor, or material under this contract, unless the financial interest is disclosed to the Commonwealth in writing and the Commonwealth consents to Contractor's financial interest prior to Commonwealth execution of the contract. Contractor

shall disclose the financial interest to the Commonwealth at the time of bid or proposal submission, or if no bids or proposals are solicited, no later than Contractor's submission of the contract signed by Contractor.

5. Contractor certifies to the best of its knowledge and belief that within the last five (5) years Contractor or Contractor Related Parties have not:
    - **i.** been indicted or convicted of a crime involving moral turpitude or business honesty or integrity in any jurisdiction;
    - **ii.** been suspended, debarred or otherwise disqualified from entering into any contract with any governmental agency;
    - **iii.** had any business license or professional license suspended or revoked;
    - **iv.** had any sanction or finding of fact imposed as a result of a judicial or administrative proceeding related to fraud, extortion, bribery, bid rigging, embezzlement, misrepresentation or anti-trust; and
    - **v.** been, and is not currently, the subject of a criminal investigation by any federal, state or local prosecuting or investigative agency and/or civil anti-trust investigation by any federal, state or local prosecuting or investigative agency.

If Contractor cannot so certify to the above, then it must submit along with its bid, proposal a written explanation (Exhibit D) of why such certification cannot be made and the Commonwealth will determine whether a contract may be entered into with the Contractor. The Contractor's obligation pursuant to this certification is ongoing from and after the effective date of the contract through the termination date thereof. Accordingly, the Contractor shall have an obligation to immediately notify the Commonwealth in writing if at any time during the term of the contract if becomes aware of any event which would cause the Contractor's certification or explanation to change. Contractor acknowledges that the Commonwealth may, in its sole discretion, terminate the contract for cause if it learns that any of the certifications made herein are currently false due to intervening factual circumstances or were false or should have been known to be false when entering into the contract.

6. Contractor shall comply with the requirements of the Lobbying Disclosure Act (65 Pa.C.S. §13A01 et seq.) regardless of the method of award. If this contract was awarded on a Non-bid Basis, Contractor must also comply with the requirements of the Section 1641 of the Pennsylvania Election Code (25 P.S. §3260a).
7. When Contractor has reason to believe that any breach of ethical standards as set forth in law, the Governor's Code of Conduct, or these Contractor Integrity Provisions has occurred or may occur, including but not limited to contact by a Commonwealth officer or employee which, if acted upon, would violate such ethical standards, Contractor shall immediately notify the Commonwealth contracting officer or the Office of the State Inspector General in writing.
8. Contractor, by submission of its bid or proposal and/or execution of this contract and by the submission of any bills, invoices or requests for payment pursuant to the contract, certifies and represents that it has not violated any of these Contractor Integrity Provisions in connection with the submission of the bid or proposal, during any contract negotiations or during the term of the contract, to include any extensions thereof. Contractor shall immediately notify the Commonwealth in writing of any actions for occurrences that would result in a violation of these Contractor Integrity Provisions. Contractor agrees to reimburse the Commonwealth for the reasonable costs of investigation incurred by the Office of the State Inspector General for investigations of the Contractor's compliance with the terms of this or any other agreement between the Contractor and the Commonwealth that results in the suspension or debarment of the Contractor. Contractor shall not be responsible for

investigative costs for investigations that do not result in the Contractor's suspension or debarment.

9. Contractor shall cooperate with the Office of the State Inspector General in its investigation of any alleged Commonwealth agency or employee breach of ethical standards and any alleged Contractor non-compliance with these Contractor Integrity Provisions. Contractor agrees to make identified Contractor employees available for interviews at reasonable times and places. Contractor, upon the inquiry or request of an Inspector General, shall provide, or if appropriate, make promptly available for inspection or copying, any information of any type or form deemed relevant by the Office of the State Inspector General to Contractor's integrity and compliance with these provisions. Such information may include, but shall not be limited to, Contractor's business or financial records, documents or files of any type or form that refer to or concern this contract. Contractor shall incorporate this paragraph in any agreement, contract or subcontract it enters into in the course of the performance of this contract/agreement solely for the purpose of obtaining subcontractor compliance with this provision. The incorporation of this provision in a subcontract shall not create privity of contract between the Commonwealth and any such subcontractor, and no third party beneficiaries shall be created thereby.

10. For violation of any of these Contractor Integrity Provisions, the Commonwealth may terminate this and any other contract with Contractor, claim liquidated damages in an amount equal to the value of anything received in breach of these Provisions, claim damages for all additional costs and expenses incurred in obtaining another contractor to complete performance under this contract, and debar and suspend Contractor from doing business with the Commonwealth. These rights and remedies are cumulative, and the use or non-use of any one shall not preclude the use of all or any other. These rights and remedies are in addition to those the Commonwealth may have under law, statute, regulation, or otherwise.

22. CONTRACTOR RESPONSIBILITY PROVISIONS

For the purpose of these provisions, the term contractor is defined as any person, including, but not limited to, a bidder, offeror, loan recipient, grantee or lessor, who has furnished or performed or seeks to furnish or perform, goods, supplies, services, leased space, construction or other activity, under a contract, grant, lease, purchase order or reimbursement agreement with the Commonwealth of Pennsylvania (Commonwealth). The term contractor includes a permittee, licensee, or any agency, political subdivision, instrumentality, public authority, or other public entity in the Commonwealth.

(a) The Contractor certifies, in writing, for itself and its subcontractors required to be disclosed or approved by the Commonwealth, that as of the date of its execution of this Bid/Contract, that neither the Contractor, nor any such subcontractors, are under suspension or debarment by the Commonwealth or any governmental entity, instrumentality, or authority and, if the Contractor cannot so certify, then it agrees to submit, along with its Bid/Contract, a written explanation of why such certification cannot be made.

(b) The Contractor also certifies, in writing, that as of the date of its execution of this Bid/Contract it has no tax liabilities or other Commonwealth obligations, or has filed a timely administrative or judicial appeal if such liabilities of obligations exist, or is subject to a duly approved deferred payment plan if such liabilities exist.

(c) The Contractor's obligations pursuant to these provisions are ongoing from and after the effective date of the Contract through the termination date thereof. Accordingly, the Contractor shall have an obligation to inform the Commonwealth if, at any time during the term of the Contract, it becomes delinquent in the payment of taxes, or other Commonwealth obligations, or if it or, to the best

knowledge of the Contractor, any of its subcontractors are suspended or debarred by the Commonwealth, the federal government, or any other state or governmental entity. Such notification shall be made within 15 days of the date of suspension or debarment.

(d) The failure of the Contractor to notify the Commonwealth of its suspension or debarment by the Commonwealth, any other state, or the federal government shall constitute an event of default of the Contract with the Commonwealth.

(e) The Contractor agrees to reimburse the Commonwealth for the reasonable costs of investigation incurred by the Office of State Inspector General for investigations of the Contractor's compliance with the terms of this or any other agreement between the Contractor and the Commonwealth that results in the suspension or debarment of the contractor. Such costs shall include, but shall not be limited to, salaries of investigators, including overtime; travel and lodging expenses; and expert witness and documentary fees. The Contractor shall not be responsible for investigative costs for investigations that do not result in the Contractor's suspension or debarment.

(f) The Contractor may obtain a current list of suspended and debarred Commonwealth contractors by either searching the Internet at **http://www.dgs.state.ps.us/** or contacting the :

Department of General Services
Office of Chief Counsel
603 North Office Building
Harrisburg, PA 17125
Telephone No: (717) 787-5599
FAX No. (717) 787-9138

23. AMERICANS WITH DISABILITIES ACT

(a) Pursuant to federal regulations promulgated under the authority of The Americans With Disabilities Act, 28 C.F.R. §35.101 et seq., FINANCER understands and agrees that it shall not cause any individual with a disability to be excluded from participation in this Agreement or from activities provided for under this Agreement on the basis of the disability. As a condition of accepting this Agreement, FINANCER agrees to comply with the "General Prohibitions Against Discrimination", 28 C.F.R. §35.130, and all other regulations promulgated under Title II of The Americans With Disabilities Act which are applicable to all benefits, services programs, and activities provided by the Commonwealth of Pennsylvania through the contracts with outside contractors.

(b) FINANCER shall be responsible for and agrees to indemnify and hold harmless the Commonwealth of Pennsylvania from all losses, damages, expenses, claims, demands, suits, and actions brought by any party against the Commonwealth of Pennsylvania as a result of FINANCER's failure to comply with the provisions of subparagraph above.

24. INDEMNIFICATION

Neither the FINANCER nor the Commonwealth assumes any liability for each other. As to liability to each other for injury or death to persons, or damages to property, the Commonwealth and the FINANCER do not waive any defenses as a result of entering into this Agreement. This provision shall not be construed to limit the Commonwealth's rights, claims or defenses which arise as a matter of law pursuant to any provisions of this Agreement. This provision shall not be construed to limit the sovereign immunity of the Commonwealth.

25. RIGHT-TO-KNOW

(a) The Pennsylvania Right-to-Know Law, 65 P.S. §§ 67.101-3104, ("RTKL") applies to this Contract. For the purpose of these provisions, the term "the Commonwealth" shall refer to the contracting Commonwealth agency.

(b) If the Commonwealth needs the Contractor's assistance in a matter arising out of the RTKL related to this Contract, it shall notify the Contractor using the legal contact information provided in this Contract. The Contractor, at any time, may designate a different contact for such purpose upon reasonable prior written notice to the Commonwealth.

(c) Upon written notification from the Commonwealth that it requires the Contractor's assistance in responding to a request under the RTKL for information related to this Contract that may be in the Contractor's possession, constituting, or alleged to constitute, a public record in accordance with the RTKL ("Requested Information"), the Contractor shall:

1. Provide the Commonwealth, within ten (10) calendar days after receipt of written notification, access to, and copies of, any document or information in the Contractor's possession arising out of this Contract that the Commonwealth reasonably believes is Requested Information and may be a public record under the RTKL; and

2. Provide such other assistance as the Commonwealth may reasonably request, in order to comply with the RTKL with respect to this Contract.

(d) If the Contractor considers the Requested Information to include a request for a Trade Secret or Confidential Proprietary Information, as those terms are defined by the RTKL, or other information that the Contractor considers exempt from production under the RTKL, the Contractor must notify the Commonwealth and provide, within seven (7) calendar days of receiving the written notification, a written statement signed by a representative of the Contractor explaining why the requested material is exempt from public disclosure under the RTKL.

(e) E. The Commonwealth will rely upon the written statement from the Contractor in denying a RTKL request for the Requested Information unless the Commonwealth determines that the Requested Information is clearly not protected from disclosure under the RTKL. Should the Commonwealth determine that the Requested Information is clearly not exempt from disclosure, the Contractor shall provide the Requested Information within five (5) business days of receipt of written notification of the Commonwealth's determination.

(f) If the Contractor fails to provide the Requested Information within the time period required by these provisions, the Contractor shall indemnify and hold the Commonwealth harmless for any damages, penalties, costs, detriment or harm that the Commonwealth may incur as a result of the Contractor's failure, including any statutory damages assessed against the Commonwealth.

(g) The Commonwealth will reimburse the Contractor for any costs associated with complying with these provisions only to the extent allowed under the fee schedule established by the Office of Open Records or as otherwise provided by the RTKL if the fee schedule is inapplicable.

(h) The contractor may file a legal challenge to any Commonwealth decision to release a record to the public with the Office of Open Records, or in the Pennsylvania Courts; however, the Contractor shall indemnify the Commonwealth for any legal expenses incurred by the Commonwealth as a result of such a challenge and shall hold the Commonwealth harmless for any damages, penalties, costs, detriment or harm that the Commonwealth may incur as a result of the Contractor's failure, including any statutory damages assessed against the Commonwealth, regardless of the outcome of such legal challenge. As between the parties, the Contractor agrees to waive all rights or remedies

that may be available to it as a result of the Commonwealth's disclosure of Requested Information pursuant to RTKL.

(i) The Contractor's duties relating to the RTKL are continuing duties that survive the expiration of this Contract and shall continue as long as the Contractor has Requested Information in its possession.

26. TAX LIABILITY CERTIFICATION

The Small GESA Contractor, by execution of the Audit Contract:

(a) Certifies that the Contractor has no outstanding tax liability to the Commonwealth of Pennsylvania;

(b) Authorizes the Department of Revenue to release information related to its tax liability to the Department of General Services; and

(c) Authorizes the Commonwealth to set off any state and local tax liabilities of the Contractor or any of its subsidiaries, as well as any other amount due to the Commonwealth from the Contractor, not being contested on appeal by the Contractor, against any payment due to the Contractor under a contract with the Commonwealth.

The certification of no outstanding tax liability is a material representation of fact upon which reliance is placed by the Department in entering into the contract. If it is later determined that the Contractor knowingly rendered an erroneous certification, the Department may find the Contractor in default and terminate the contract. Such erroneous certification may also be grounds for the initiation of civil or criminal proceedings.

27. GOVERNING LAW

This Agreement shall be construed in accordance with, and governed by the laws of, the Commonwealth of Pennsylvania.

28. PARAGRAPH HEADINGS

All section headings contained herein are for the convenience of reference only and are not intended to define or limit the scope of any provision of this Agreement.

29. COUNTERPARTS

This Agreement may be executed in one or more counterparts, each of which is an original, and all of which together are a single agreement.

30. DELIVERY OF RELATED DOCUMENTS

Commonwealth will execute or provide, as requested by FINANCER, such other documents and information as are reasonable necessary with respect to the transaction contemplated by this Agreement.

Commonwealth agrees that, pursuant to Section 149(a) of the Internal "Revenue Code of 1986, as amended (the "Code"), and any temporary and final income tax regulations promulgated thereunder, it shall file the applicable Internal Revenue Service Form 8039G or 8038GC (Information Return for Tax Exempt Governmental Bond Issues). Additionally, Commonwealth, pursuant to Section 149 (a) of the Code, hereby appoints the FINANCER, or any assignee thereof, as "Agent" of the Lessee to keep a record of the assignees who maintain an interest in this Lease. Commonwealth agrees that it shall remit to the Internal Revenue Service any rebates due as provided by the Code.

31. ENTIRE AGREEMENT; WAIVER

This Agreement, together with the Request for Bid Proposals for Financing, the FINANCER's Bid Proposal, the GESA Contract, the Payment Schedule, and the documents delivered pursuant to the requirements of Paragraph 27 of this Agreement, constitute the entire Agreement between the parties with respect to the financing of the GESA Contract, and this Agreement shall not be modified amended, altered, or changed except with the written consent of the FINANCER and the Commonwealth (DGS and Funding Agency). Any provision of this Agreement found to be prohibited by law shall be ineffective to the extent of such prohibition without invalidating the remainder of this Agreement. The waiver by the FINANCER and the Commonwealth (DGS and Funding Agency) of any breach by the other party of any term, covenant, or condition hereof shall not operate as a waiver of any subsequent breach thereof.

SIGNATURE PAGE IMMEDIATELY FOLLOWS

IN WITNESS WHEREOF the parties to this Agreement have executed it through their respective duly authorized officers, to be effective as of the date first above written. This Agreement will not be fully executed and binding on the parties unless and until all signatures are affixed hereto.

ATTEST:

_____
(FINANCER)

_____	**_____**
[NAME]	**[NAME]**
_____	**_____**
Signature	**Signature**
_____	**_____**
Title	**Title**

Federal Identification No. _____
Vender No._____

ATTEST:	**COMMONWEALTH OF PENNSYLVANIA** **Acting through the** **DEPARTMENT OF XXXX**
_____	**_____**
Signature	**Secretary**

APPROVED AS TO FORM AND LEGALITY:

_____	**_____**
Office of Chief Counsel – Funding Agency	**Office of General Counsel**
_____	**_____**
Office of Attorney General	**Comptroller Operations Date**

Exhibit A

Guaranteed Energy Savings Contract

Page Intentionally Left Blank

Exhibit B

Form of Acceptance Certificate

Page Intentionally Left Blank

FORM OF ACCEPTANCE CERTIFICATE

FINANCER ADDRESS
Attn: Contract Administration

Re: Installment Purchase Agreement and Payment Schedule (the "Agreement") dated as of _____ between _____ ("FINANCER") and the Commonwealth of Pennsylvania, Acting through the Department of General Services ("DGS")

Ladies and Gentlemen:

In accordance with the Agreement, the undersigned DGS hereby certifies and represents to, and agrees with Lessor as follows:

1. The implementation/construction of the ECMs (as defined in the Agreement) has been completed by the GESA Contractor (as defined in the Agreement) and such ECMs have been delivered, installed and accepted on the date hereof.

2. Funding Agency has conducted such inspection and/or testing of the ECMs as it deems necessary and appropriate and hereby acknowledges that it accepts the ECMs for all purposes.

3. Funding Agency is self-insured in accordance with Section 13 of the Agreement.

4. Funding Agency hereby reaffirms that the representations, warranties and covenants contained in the Agreement are true and correct as of the date hereof.

5. No event or condition that constitutes, or with notice or lapse of time, or both, would constitute, an Event of Default (as defined in the Agreement) exists at the date hereof under the Agreement.

Date: _____

Commonwealth of Pennsylvania, Acting through the Department of General Services ("DGS")

By: _____

Name: _____

Title: _____

(Seal)

Page Intentionally Left Blank

Exhibit C

Payment Schedule

Page Intentionally Left Blank

APPENDIX N

- Investment Grade Audit Report Contract

INVESTMENT GRADE AUDIT CONTRACT

FOR A SMALL GUARANTEED ENERGY SAVINGS ACT PROJECT

BETWEEN

THE DEPARTMENT OF [FUNDING AGENCY],

THE DEPARTMENT OF GENERAL SERVICES,

AND

THE SMALL GESA CONTRACTOR

This Investment Grade Audit Contract for a Small GESA Project (hereinafter "the Audit Contract"), executed this _____day of _____, 20_____, by and between the Funding Agency (" "),and the Department of General Services ("DGS"), both as executive agencies of the Commonwealth of Pennsylvania authorized to enter into Audit Contracts pursuant to 62 Pa. C. S. §§3751-3758, and

_____

_____

_____

a corporation incorporated under the Laws of the State of _____, its successors and assigns, hereinafter called "the Small GESA Contractor".

OR

This Investment Grade Audit Contract for a Small GESA Project (hereinafter "the Audit Contract") executed this _____day of _____, 20_____, by and between the "Funding Agency (" ") and the Department of General Services ("DGS"), both as executive agencies of the Commonwealth of Pennsylvania authorized to enter into Audit Contracts pursuant to 62 Pa. C. S. §§3751-3758, and

_____

_____

_____

their heirs, executors, administrators and assigns, hereinafter called "the Small GESA Contractor".

WHEREAS, in consideration of the mutual covenants and conditions herein provided, DGS and the Funding Agency do hereby retain the Small GESA Contractor to perform the Investment Grade Audit Report required to satisfactorily complete this portion of the Small GESA Project and the Small GESA Contractor agrees to expeditiously perform such required services and work. Further, the parties covenant and agree as follows:

ARTICLE 1 – THE AUDIT CONTRACT DOCUMENTS

The Audit Contract Documents shall consist of this Investment Grade Audit Contract and all Exhibits hereto, the Request for Proposal ("the RFP"), the Small GESA Contractor's proposal submitted in response to the RFP, all drawings created by or for the Small GESA Contractor and/or their Retained Professional, the specifications created by or for the Small GESA Contractor and/or their Retained Professional, the Scope of Work by ECM (Exhibit 1), and all bulletins and addenda issued prior to execution of the contract. All of these documents form the contract and are as fully part of the contract as if attached to this Audit Contract or repeated herein.

ARTICLE 2 – THE WORK

The Small GESA Contractor shall perform all the work required by the Audit Contract Documents as set forth in the RFP to provide the Investment Grade Audit Report.

ARTICLE 3 – TIME OF COMMENCEMENT AND COMPLETION

3.1 The contract duration for this Audit Contract is 45 calendar days and shall be commenced upon the effective date of the Audit Contract or upon issuance of a Letter of Intent to contract (62 Pa. C.S. § 906), whichever occurs first. This effective date is defined as the date upon which the last Commonwealth official who is required to execute the contract executes the contract.

3.2 The format and scope of the Investment Grade Audit Report shall be as set forth in the RFP.

A. If, after review of the Investment Grade Audit Report, DGS and the Funding Agency accept the Investment Grade Audit Report and mutually agree to terminate the project, the Funding Agency will pay the sum of_____dollars ($ .00) to the

Small GESA Contractor for the cost of the Investment Grade Audit Report and this Audit Contract will terminate upon said payment.

B. If, after review of the Investment Grade Audit Report, DGS and the Funding Agency accept the Investment Grade Audit Report and mutually agree to continue with the Small GESA project, DGS, the Funding Agency, Small GESA Contractor, and, if required, an Investment Grade Financing Provider will enter into other contract(s) to complete the Small GESA project as set forth in the RFP to implement the chosen ECMs.

3.3 Small GESA Contractor further agrees that the time is of the essence on this Audit Contract and that if it fails to complete the work within the time specified above, the Small GESA Contractor will pay the Funding Agency, as Liquidated Damages and not as a penalty for such failure, the sum of_____dollars ($ .00) per day for each and every calendar day after the completion date until the Work is completed and accepted. The DGS may extend the completion date of the Audit Contact for causes that, in fact, delay the completion of said work. If it appears the Investment Grade Audit Report will be delayed, the Small GESA Contractor shall immediately notify DGS and the Funding Agency, in writing, prior to the due date. The Small GESA Contractor shall include in the written notice the reason(s) for the Small GESA Contractor's inability to meet the completion date and a request that DGS extend the due date. In such case, Small GESA Contractor is liable for said Liquidated Damages only after the expiration of the extended period.

ARTICLE 4 – MISCELLANEOUS PROVISIONS

4.1. Terms used in this Audit Contract are defined in the project-specific RFP and have the meanings designated therein. The Standard Contract Provisions are attached as Exhibit 2.

4.2. The Small GESA Contractor agrees to abide by and be bound by the Laws of Pennsylvania including those relating to and regulating the hours and conditions of employment.

4.3. Nothing in this Audit Contract shall be deemed to waive or otherwise affect the sovereign immunity of the Commonwealth, and its agencies, officers, and employees, or to subject any Commonwealth party to any liability not expressly authorized by law.

4.4. The Small GESA Contractor agrees to defend, protect, indemnify, and hold harmless DGS and the Funding Agency from and against any and all liabilities, losses, damages, costs, expenses, reasonable attorney's fees, causes of action, suits, claims, demands, or judgments of any nature arising from a negligent act, error, or omission of the Small GESA Contractor, its employees, its agents or its consultants, arising out of the performance of services under this Audit Contract.

4.5. Any person, co-partnership, association or corporation furnishing labor, material, equipment, or renting equipment or rendering public utility services in connection with the performance of this Audit Contract has a right of action to recover the cost thereof from the Small GESA Contractor for such labor, material, equipment or equipment rental and for services rendered by public utility. The Small GESA Contractor shall include in all of its subcontracts or supply contracts a provision requiring that its subcontractors and suppliers notify, in writing, their subcontractors and suppliers of this requirement. It is hereby agreed that no third party rights arise against the Funding Agency or DGS for any reason under this Article, and the Small GESA Contractor hereby agrees to so inform all subcontractors and suppliers in writing.

4.6. The Small GESA Contractor, DGS, and the Funding Agency each binds itself, its partners, successors, legal representatives and assigns to the other party to this Audit Contract and to the partners, successors, legal representatives and assigns of such other party in respect to all covenants of this Audit Contract. The Small GESA Contractor shall not assign, sublet or transfer any interest in the whole or any part of this Audit Contract without the written consent of DGS and the Funding Agency. DGS and the Funding Agency may assign, sublet or transfer its interest in this Audit Contract explicitly under statutory authority. This provision does not prevent an assignment for financing purposes of amounts, due or to become due under this Audit Contract, nor the retaining, by the Small GESA Contract, on its own responsibility and at its own expense, of such specialized architects or engineers as may be necessary for the proper development of the Work.

4.7. This Audit Contract may be amended by an agreement of the parties, reduced to writing and executed by authorized representatives of the respective parties. The Small GESA Contractor hereby acknowledges receipt of notice that no person has any authority to

amend or modify this Audit Contract or waive any term or provision hereof except by written amendment hereto signed by the Secretary of the DGS or by the Deputy Secretary for Public Works of DGS and the Funding Agency.

4.8. This Audit Contract may be executed in one or more counterparts, each of which is an original, and all of which together are a single contract.

ARTICLE 5 – INSURANCE REQUIREMENTS

5.1 **GESA CONTRACTOR'S LIABILITY INSURANCE**. The GESA Contractor, during the progress of the Work and until the acceptance of the Work, shall purchase and maintain such insurance as will protect it from claims set forth below which may arise out of or result from the GESA Contractor's operations under the Audit Contract, whether such operations by itself or by any Subcontractor:

A. Claims under Worker's Compensation Disability Benefit and other similar employee benefit Acts; and

B. Claims for damages because of bodily injury, occupational sickness or disease, or death of its employees, and claims insured by usual personal injury liability coverage; and

C. Claims for damages because of bodily injury, sickness or disease, or death, of any person other than its employees, and claims insured by usual personal injury liability coverage; and

D. Claims for damages because of injury to or destruction of tangible property including loss of use resulting therefrom.

5.2 **INSURANCE LIMITS**. The insurance required by this Article shall be written for not less than any limits of liability specified in the RFP or required by Law.

5.3 **CERTIFICATES OF INSURANCE**. Certificates of Insurance acceptable to DGS shall be filed with DGS upon GESA Contractor's execution of the Audit Contract. These certificates shall contain a provision that coverages afforded under the policies shall not be canceled or changed until at least ninety (90) calendar days written notice has been given to the Department. Renewal certificates must be provided to DGS prior to the expiration of the prior policy as stated on the certificate. The insurance certificate shall also name the Commonwealth of Pennsylvania as an additional insured.

5.4 **COMPREHENSIVE GENERAL LIABILITY AND AUTOMOBILE LIABILITY INSURANCES.** The Small GESA Contractor's comprehensive general liability insurance and automobile liability insurance shall be in the amounts set forth in the RFP.

A. For Subcontractors, the Small GESA Contractor shall either:

1. Require each of its Subcontractors to procure and to maintain Subcontractors' comprehensive general liability, automobile liability, and property damage liability insurance of the type and in the same amounts as specified in this subsection for the life of its subcontract and/or until the acceptance of all of its on-site physical work, change order work, and/or demobilization;

OR

2. Insure the activity of its Subcontractors in its own policy.

B. The Small GESA Contractor must submit to the Department within ten (10) calendar days from the full execution of this Audit Contract, and prior to the beginning of on-site work, evidence that all subcontractors and sub-subcontractors are covered by insurance.

5.5 **PROPERTY INSURANCE.** The Small GESA Contractor shall, until all Work is complete, maintain insurance on all insurable work included in the Audit Contract against loss or damage by fire and lightning and those perils covered by the extended coverage endorsement. Insurable work includes work both inside and outside of any building. The insurance must be in the names of DGS and the Small GESA Contractor in full insurable value thereof as will fully protect the interests of DGS and the Commonwealth, the Small GESA Contractor, Subcontractors, and Sub-subcontractors.

SIGNATURE PAGE IMMEDIATELY FOLLOWS

REMAINDER OF PAGE INTENTIONALLY LEFT BLANK

IN WITNESS WHEREOF, the Department of_____, the Department of General Services, and the Small GESA Contractor, have caused this contract to be executed on the day and year above written.

Witness: [Small GESA Contractor]

_____ _____

Secretary/Treasurer Date: _____ President Date:_____

COMMONWEALTH OF PENNSYLVANIA
ACTING THROUGH THE DEPARTMENT
OF GENERAL SERVICES

Witness:

_____ _____

Date: _____ Secretary of DGS Date: _____

COMMONWEALTH OF PENNSYLVANIA
ACTING THROUGH THE DEPARTMENT
OF [Funding Agency]

Witness:

_____ _____

Date: _____ Secretary of [Funding Agency] Date: _____

APPROVED AS TO LEGALITY
AND FORM

I hereby certify that funds in the amount of
$_____
Are available under Appropriation Symbol

_____ _____

Office of Chief Counsel – DGS Comptroller Operations

_____

Office of Chief Counsel - Funding Agency

_____

Office of General Counsel

_____

Office of Attorney General

EXHIBIT 1

Scope of Work by ECM

EXHIBIT 2

RIGHT TO KNOW LAW
NONDISCRIMINATION / SEXUAL HARASSMENT CLAUSE
AMERICANS WITH DISABILITIES ACT
CONTRACTOR INTEGRITY PROVISIONS
CONTRACTOR RESPONSIBILITY PROVISIONS
TAX LIABILITY CERTIFICATION
STEEL PRODUCTS PROCUREMENT ACT
ENVIRONMENTAL STATEMENT

RIGHT TO KNOW LAW

A. The PA Right-to-Know Law, 65 P.S. §§ 67.101-3104, applies to this Audit Contract.

B. Unless the Small GESA Contractor provides the Commonwealth, in writing, with the name and contact information of another person, the agency shall notify the Small GESA Contractor using the Small GESA Contractor information provided by the Small GESA Contractor in SRM [*or* "the legal contact information provided in this Contract"] if the agency needs the Small GESA Contractor's assistance in any matter arising out of the Right to Know Law ("RTKL"). The Small GESA Contractor shall notify the agency in writing of any change in the name or the contact information within a reasonable time prior to the change.

C. Upon notification from the Commonwealth that the Commonwealth requires the Small GESA Contractor's assistance in responding to a RTKL request for records in the Small GESA Contractor's possession, the Small GESA Contractor shall provide the Commonwealth, within fourteen (14) calendar days after receipt of such notification, access to, and copies of, any document or information in the Small GESA Contractor's possession which arises out of the Contract that the Commonwealth requests ("Requested Information") and provide such other assistance as the Commonwealth may request in order to comply with the RTKL. If the Small GESA Contractor fails to provide the Requested Information within fourteen (14) calendar days after receipt of such request, the Small GESA Contractor shall indemnify and hold the Commonwealth harmless for any damages, penalties, detriment or harm that the Commonwealth may incur as a result of the Small GESA Contractor's failure, including any statutory damages assessed against the Commonwealth.

D. The Commonwealth's determination as to whether the Requested Information is a public record is dispositive of the question as between the parties. Small GESA Contractor agrees not to challenge the Commonwealth's decision to deem the Requested Information a Public Record. If the Small GESA Contractor considers the Requested Information to include a request for a Trade Secret or Confidential Proprietary Information, as those terms are defined by the RTKL, the Small GESA Contractor will immediately notify the Commonwealth, and will provide a written statement signed by a representative of the Small GESA Contractor explaining why the requested material is exempt from public disclosure under the RTKL within seven (7) calendar days of receiving the request. If, upon review of the Small GESA Contractor written statement, the Commonwealth still decides to provide the Requested Information, Small GESA Contractor will not challenge or in any way hold the Commonwealth liable for such a decision.

E. The Commonwealth will reimburse the Small GESA Contractor for any costs associated with complying with this provision only to the extent allowed under the fee schedule established by the Office of Open Records or as otherwise provided by the RTKL if the fee schedule is inapplicable.

F. Small GESA Contractor agrees to abide by any decision to release a record to the public made by the Office of Open Records, or by the Pennsylvania Courts. The Small GESA Contractor agrees to waive all rights or remedies that may be available to it as a result of the Commonwealth's disclosure of Requested Information pursuant to the RTKL. Small GESA Contractor's duties relating to the RTKL are continuing duties that survive the expiration of this Contract and shall continue as long as the Small GESA Contractor has Requested Information in its possession.

NONDISCRIMINATION/SEXUAL HARASSMENT CLAUSE

During the term of this Contract, Small GESA Contractor agrees as follows:

1. In the hiring of any employee(s) for the manufacture of supplies, performance of work, or any other activity required under the contract or any subcontract, the Contractor, each subcontractor, or any person acting on behalf of the Contractor or subcontractor shall not discriminate in violation of the Pennsylvania Human Relations Act (PHRA) and applicable federal laws against any citizen of this Commonwealth who is qualified and available to perform the work to which the employment relates.

2. Neither the Contractor nor any subcontractor nor any person on their behalf shall in any manner discriminate in violation of the PHRA and applicable federal laws against or intimidate any employee involved in the manufacture of supplies, the performance of work, or any other activity required under the contract.

3. The Contractor and each subcontractor shall establish and maintain a written nondiscrimination and sexual harassment policy and shall inform their employees of the policy. The policy must contain a provision that sexual harassment will not be tolerated and employees who practice it will be disciplined. Posting this Nondiscrimination/Sexual Harassment clause conspicuously in easily-accessible and well-lighted places customarily frequented by employees and at or near where the contract services are performed shall satisfy this requirement.

4. The Contractor and each subcontractor shall not discriminate in violation of PHRA and applicable federal laws against any subcontractor or supplier who is qualified to perform the work to which the contract relates.

5. The Contractor and each subcontractor represents that it is presently in compliance with and will maintain compliance with all applicable federal, state, and local laws and regulations relating to nondiscrimination and sexual harassment. The Contractor and each subcontractor further represents that it has filed a Standard Form 100 Employer Information Report ("EEO-1") with the U.S. Equal Employment Opportunity Commission ("EEOC") and shall file an annual EEO-1 report with the EEOC as required for employers subject to Title VII of the Civil Rights Act of 1964, as amended, that that have 100 or more employees and employers that have federal government contracts or first-tier subcontracts and have 50 or more employees. The Contractor and each subcontractor shall, upon

request and within the time periods requested by the Commonwealth, furnish all necessary employment documents and records, including EEO-1 reports, and permit access to their books, records, and accounts by the contracting agency and the Bureau of Small Business Opportunities (BSBO), for purpose of ascertaining compliance with provisions of this Nondiscrimination/Sexual Harassment Clause.

6. The contractor shall include the provisions of this Nondiscrimination/Sexual Harassment Clause in every subcontract so that those provisions applicable to subcontractors will be binding upon each subcontractor.

7. The Contractor's and each subcontractor's obligations pursuant to these provisions are ongoing from and after the effective date of the contract through the termination date thereof. Accordingly, the Contractor and each subcontractor shall have an obligation to inform the Commonwealth if, at any time during the term of the contract, it becomes aware of any actions or occurrences that would result in violation of the provisions.

8. The Commonwealth may cancel or terminate the contract and all money due or to become due under the contract may be forfeited for the violation of the terms and conditions of this Nondiscrimination/Sexual Harassment Clause. In addition, the agency may proceed with debarment or suspension and may place the Contractor in the Contractor Responsibility File.

AMERICANS WITH DISABILITIES ACT

During the term of this contract, Contractor agrees as follows:

1. Pursuant to federal regulations promulgated under the authority of The Americans with Disabilities Act, 28 C.F.R. § 35.101 et seq., the Contractor understands and agrees that no individual with a disability shall, on the basis of the disability, be excluded from participation in this contract or from activities provided for under this contract. As a condition of accepting and executing this contract, the contractor agrees to comply with the "General Prohibitions Against Discrimination," 28 C.F.R. § 35.130, and all other regulations promulgated under Title II of The Americans with Disabilities Act which are applicable to all benefits, services, programs, and activities provided by the Commonwealth through contracts with outside contractors.

2. The Contractor shall be responsible for and agrees to indemnify and hold harmless the Commonwealth from all losses, damages, expenses, claims, demands, suits, and actions brought by any party against the Commonwealth as a result of the Contractor's failure to comply with the provisions of paragraph 1 above.

CONTRACTOR INTEGRITY PROVISIONS

It is essential that those who seek to contract with the Commonwealth of Pennsylvania ("Commonwealth") observe high standards of honesty and integrity. They must conduct themselves in a manner that fosters public confidence in the integrity of the Commonwealth contracting and procurement process.

1. DEFINITIONS. For purposes of these Contractor Integrity Provisions, the following terms shall have the meanings found in this Section:

a. "Affiliate" means two or more entities where (a) a parent entity owns more than fifty percent of the

voting stock of each of the entities; or (b) a common shareholder or group of shareholders owns more than fifty percent of the voting stock of each of the entities; or (c) the entities have a common proprietor or general partner.

b. "Consent" means written permission signed by a duly authorized officer or employee of the Commonwealth, provided that where the material facts have been disclosed, in writing, by prequalification, bid, proposal, or contractual terms, the Commonwealth shall be deemed to have consented by virtue of the execution of this contract.

c. "Contractor" means the individual or entity, that has entered into this contract with the Commonwealth.

d. "Contractor Related Parties" means any affiliates of the Contractor and the Contractor's executive officers, Pennsylvania officers and directors, or owners of 5 percent or more interest in the Contractor.

e. "Financial Interest" means either:

(1) Ownership of more than a five percent interest in any business; or

(2) Holding a position as an officer, director, trustee, partner, employee, or holding any position of management.

f. "Gratuity" means tendering, giving, or providing anything of more than nominal monetary value including, but not limited to, cash, travel, entertainment, gifts, meals, lodging, loans, subscriptions, advances, deposits of money, services, employment, or contracts of any kind. The exceptions set forth in the Governor's Code of Conduct, Executive Order 1980-18, the 4 Pa. Code §7.153(b), shall apply.

g. "Non-bid Basis" means a contract awarded or executed by the Commonwealth with Contractor without seeking bids or proposals from any other potential bidder or offeror.

2. In furtherance of this policy, Contractor agrees to the following:

a. Contractor shall maintain the highest standards of honesty and integrity during the performance of this contract and shall take no action in violation of state or federal laws or regulations or any other applicable laws or regulations, or other requirements applicable to Contractor or that govern contracting or procurement with the Commonwealth.

b. Contractor shall establish and implement a written business integrity policy, which includes, at a minimum, the requirements of these provisions as they relate to the Contractor activity with the Commonwealth and Commonwealth employees and which is made known to all Contractor employees. Posting these Contractor Integrity Provisions conspicuously in easily-accessible and well-lighted places customarily frequented by employees and at or near where the contract services are performed shall satisfy this requirement.

c. Contractor, its affiliates, agents, employees and anyone in privity with Contractor shall not accept, agree to give, offer, confer, or agree to confer or promise to confer, directly or indirectly, any gratuity or pecuniary benefit to any person, or to influence or attempt to influence any person in violation of any federal or state law, regulation, executive order of the Governor of Pennsylvania, statement of policy, management directive or any other published standard of the Commonwealth in

connection with performance of work under this contract, except as provided in this contract.

d. Contractor shall not have a financial interest in any other contractor, subcontractor, or supplier providing services, labor, or material under this contract, unless the financial interest is disclosed to the Commonwealth in writing and the Commonwealth consents to Contractor's financial interest prior to Commonwealth execution of the contract. Contractor shall disclose the financial interest to the Commonwealth at the time of bid or proposal submission, or if no bids or proposals are solicited, no later than Contractor's submission of the contract signed by Contractor.

e. Contractor certifies to the best of its knowledge and belief that within the last five (5) years Contractor or Contractor Related Parties have not:

(1) been indicted or convicted of a crime involving moral turpitude or business honesty or integrity in any jurisdiction;

(2) been suspended, debarred or otherwise disqualified from entering into any contract with any governmental agency;

(3) had any business license or professional license suspended or revoked;

(4) had any sanction or finding of fact imposed as a result of a judicial or administrative proceeding related to fraud, extortion, bribery, bid rigging, embezzlement, misrepresentation or anti-trust; and

(5) been, and is not currently, the subject of a criminal investigation by any federal, state or local prosecuting or investigative agency and/or civil anti-trust investigation by any federal, state or local prosecuting or investigative agency.

If Contractor cannot so certify to the above, then it must submit along with its bid, proposal or contract a written explanation of why such certification cannot be made and the Commonwealth will determine whether a contract may be entered into with the Contractor. The Contractor's obligation pursuant to this certification is ongoing from and after the effective date of the contract through the termination date thereof. Accordingly, the Contractor shall have an obligation to immediately notify the Commonwealth in writing if at any time during the term of the contract if becomes aware of any event which would cause the Contractor's certification or explanation to change. Contractor acknowledges that the Commonwealth may, in its sole discretion, terminate the contract for cause if it learns that any of the certifications made herein are currently false due to intervening factual circumstances or were false or should have been known to be false when entering into the contract.

f. Contractor shall comply with the requirements of the Lobbying Disclosure Act (65 Pa.C.S. §13A01 et seq.) regardless of the method of award. If this contract was awarded on a Non-bid Basis, Contractor must also comply with the requirements of the Section 1641 of the Pennsylvania ElectionCode (25 P.S. §3260a).

g. When Contractor has reason to believe that any breach of ethical standards as set forth in law, the Governor's Code of Conduct, or these Contractor Integrity Provisions has occurred or may occur, including but not limited to contact by a Commonwealth officer or employee which, if acted upon, would violate such ethical standards, Contractor shall immediately notify the Commonwealth contracting officer or the Office of the State Inspector General in writing.

h. Contractor, by submission of its bid or proposal and/or execution of this contract and by the

submission of any bills, invoices or requests for payment pursuant to the contract, certifies and represents that it has not violated any of these Contractor Integrity Provisions in connection with the submission of the bid or proposal, during any contract negotiations or during the term of the contract, to include any extensions thereof. Contractor shall immediately notify the Commonwealth in writing of any actions for occurrences that would result in a violation of these Contractor Integrity Provisions. Contractor agrees to reimburse the Commonwealth for the reasonable costs of investigation incurred by the Office of the State Inspector General for investigations of the Contractor's compliance with the terms of this or any other agreement between the Contractor and the Commonwealth that results in the suspension or debarment of the Contractor. Contractor shall not be responsible for investigative costs for investigations that do not result in the Contractor's suspension or debarment.

i. Contractor shall cooperate with the Office of the State Inspector General in its investigation of any alleged Commonwealth agency or employee breach of ethical standards and any alleged Contractor non-compliance with these Contractor Integrity Provisions. Contractor agrees to make identified Contractor employees available for interviews at reasonable times and places. Contractor, upon the inquiry or request of an Inspector General, shall provide, or if appropriate, make promptly available for inspection or copying, any information of any type or form deemed relevant by the Office of the State Inspector General to Contractor's integrity and compliance with these provisions. Such information may include, but shall not be limited to, Contractor's business or financial records, documents or files of any type or form that refer to or concern this contract. Contractor shall incorporate this paragraph in any agreement, contract or subcontract it enters into in the course of the performance of this contract/agreement solely for the purpose of obtaining subcontractor compliance with this provision. The incorporation of this provision in a subcontract shall not create privity of contract between the Commonwealth and any such subcontractor, and no third party beneficiaries shall be created thereby.

j. For violation of any of these Contractor Integrity Provisions, the Commonwealth may terminate this and any other contract with Contractor, claim liquidated damages in an amount equal to the value of anything received in breach of these Provisions, claim damages for all additional costs and expenses incurred in obtaining another contractor to complete performance under this contract, and debar and suspend Contractor from doing business with the Commonwealth. These rights and remedies are cumulative, and the use or non-use of any one shall not preclude the use of all or any other. These rights and remedies are in addition to those the Commonwealth may have under law, statute, regulation, or otherwise.

CONTRACTOR RESPONSIBILITY PROVISIONS

For the purpose of these provisions, the term contractor is defined as any person, including, but not limited to, a bidder, offeror, loan recipient, grantee or lessor, who has furnished or performed or seeks to furnish or perform, goods, supplies, services, leased space, construction or other activity, under a contract, grant, lease, purchase order or reimbursement agreement with the Commonwealth of Pennsylvania (Commonwealth). The term contractor includes a permittee, licensee, or any agency, political subdivision, instrumentality, public authority, or other public entity in the Commonwealth.

1. The Contractor certifies, in writing, for itself and its subcontractors required to be disclosed or approved by the Commonwealth, that as of the date of its execution of this Bid/Contract, that neither the Contractor, nor any such subcontractors, are under suspension or debarment by the Commonwealth or any governmental

entity, instrumentality, or authority and, if the Contractor cannot so certify, then it agrees to submit, along with its Bid/Contract, a written explanation of why such certification cannot be made.

2. The Contractor also certifies, in writing, that as of the date of its execution of this Bid/Contract it has no tax liabilities or other Commonwealth obligations, or has filed a timely administrative or judicial appeal if such liabilities or obligations exist, or is subject to a duly approved deferred payment plan if such liabilities exist.

3. The Contractor's obligations pursuant to these provisions are ongoing from and after the effective date of the Contract through the termination date thereof. Accordingly, the Contractor shall have an obligation to inform the Commonwealth if, at any time during the term of the Contract, it becomes delinquent in the payment of taxes, or other Commonwealth obligations, or if it or, to the best knowledge of the Contractor, any of its subcontractors are suspended or debarred by the Commonwealth, the federal government, or any other state or governmental entity. Such notification shall be made within 15 days of the date of suspension or debarment.

4. The failure of the Contractor to notify the Commonwealth of its suspension or debarment by the Commonwealth, any other state, or the federal government shall constitute an event of default of the Contract with the Commonwealth.

5. The Contractor agrees to reimburse the Commonwealth for the reasonable costs of investigation incurred by the Office of State Inspector General for investigations of the Contractor's compliance with the terms of this or any other agreement between the Contractor and the Commonwealth that results in the suspension or debarment of the contractor. Such costs shall include, but shall not be limited to, salaries of investigators, including overtime; travel and lodging expenses; and expert witness and documentary fees. The Contractor shall not be responsible for investigative costs for investigations that do not result in the Contractor's suspension or debarment.

6. The Contractor may obtain a current list of suspended and debarred Commonwealth contractors by either searching the Internet at h**ttp://www.dgs.state.pa.us/** or contacting the:

Department of General Services
Office of Chief Counsel
603 North Office Building
Harrisburg, PA 17125
Telephone No: (717) 783-6472
FAX No: (717) 787-9138

TAX LIABILITY CERTIFICATION

The Small GESA Contractor, by execution of the Audit Contract:

a. Certifies that the Contractor has no outstanding tax liability to the Commonwealth of Pennsylvania;

b. Authorizes the Department of Revenue to release information related to its tax liability to the Department of General Services; and

c. Authorizes the Commonwealth to set off any state and local tax liabilities of the Contractor or any of its subsidiaries, as well as any other amount due to the Commonwealth from the Contractor, not being contested on appeal by the Contractor, against any payment due to the Contractor under a contract with the Commonwealth.

The certification of no outstanding tax liability is a material representation of fact upon which reliance is placed by the Department in entering into the contract. If it is later determined that the Contractor knowingly rendered an erroneous certification, the Department may find the Contractor in default and terminate the contract. Such erroneous certification may also be grounds for the initiation of civil or criminal proceedings.

STEEL PRODUCTS PROCUREMENT ACT – CERTIFICATIONS

In accordance with the Steel Products Procurement Act of March 3, 1978, P.L. 6 as amended (73 P.S. Sections 1881 et seq.), only steel products as defined in the Act shall be used or supplied in the performance of the contract or any subcontracts thereunder.

In the performance of the Contract the Contractor, subcontractors, materialmen or suppliers shall use only: 1) steel products, rolled, formed, shaped, drawn, extruded, forged, cast, fabricated, or otherwise similarly processed by a combination of two or more of such operations, from steel made in the United States by the open hearth, basic oxygen, electric furnace, bessemer or other steel making process; and 2) cast iron products made in the United States.

The Contractor shall certify that all steel and cast iron products to be used or supplied in the performance of the Contract comply with this Act. No payment will be made to the Contractor for steel and cast iron products until such certification has been received.

This section shall not apply in any case where the Deputy Secretary for Public Works of the Department, in writing, determines that steel and/or cast iron products as herein described are not produced in the United States in sufficient quantities to meet the Contract needs.

The Department shall not provide for, or make any payments to any person who has not complied with the Act. Any such payments made by the Department to anyone that should not have been made as a result of the Act, shall be recoverable directly from the Contractor, subcontractor, manufacturer or supplier that did not comply with the Act.

In addition to the withholding of payments, any person who willfully violates any of the provisions of the Act shall be prohibited from submitting any bids to any public agency for a period of five (5) years from the date of the determination that a violation has occurred. In the event the person who violates the provisions of the Act is a subcontractor, manufacturer or supplier, such person shall be prohibited from performing any work or supplying any materials to a public agency for a period of five (5) years from the date of the determination that a violation has occurred.

The Contractor shall include the provisions of the Steel Products Procurement Act in every subcontract and supply contract, so that the provisions of the Act shall be binding upon each subcontractor and supplier.

Where trade names, catalog numbers and manufacturers of material or equipment are specified, they are mentioned therein for the purpose of establishing a standard of quality, performance and appearance, and for establishing a standard of competitive bidding. The use of this descriptive information will not relieve the contractor from compliance with all aspects of the Act.

ENVIRONMENTAL STATEMENT

According to the Commonwealth Procurement Code, Act of May 15, 1998, P.L. 358, No. 57, 62 Pa. C.S. §§ 101-4509, all Requests for Proposals for construction projects issued by any government agency shall set forth any provision of Federal and State statutes, rules and regulations dealing with the prevention of environmental pollution and the preservation of public natural resources that affect the projects.

The Small GESA Contractor is hereby notified that this Project is subject to those statutes, rules and regulations shown on the following list, and the Work must be carried out in compliance with these statutes, rules and regulations.

STATE LAW

I. Purdon's Statutes - Title 3 (Agriculture)

Fertilizer Act, Act of Dec. 13, 2001, 3 Pa. C.S.A. § 6701, et seq.

Soil and Plant Amendment Act, Act of Dec. 13, 2001, 3 Pa. C.S.A. § 6901, et seq.

PA Pesticide Control Act of 1973, Act of March 1, 1974 as amended, 3 P.S. § 111.21, et seq.

Agricultural Liming Materials Act, Act of March 17, 1978, as amended, 3 P.S. § 132-1, et seq.

The PA Plant Pest Act of 1992, Act of December 16, 1992 as amended, 3 P.S. § 258.1, et seq.

Noxious Weed Control Law, Act of April 7, 1982 as amended, 3 P.S. § 255.1, et seq.

Conservation District Law, Act of May 15, 1945 as amended, 3 P.S. § 849, et seq.

(Relating to weather modification), Act of January 19, 1968, as amended, 3 P.S. § 1101, et seq.

II. Purdon's Statutes - Title 16 (Counties)

(Relating to land use), Act of January 13, 1966 as amended, 16 P.S. § 11941, et seq.

III. Purdon's Statutes - Title 18 (Crimes and Offenses)

The Crimes Code, Act of December 6, 1972, as amended, 18 Pa. C.S.A. § 101, et seq.

IV. Purdon's Statutes - Title 24 (Education)

Public School Code of 1949, Act of March 10, 1949, as amended, 24 P.S. § 7-731, et seq.

V. Purdon's Statutes - Title 30 (Fish)

The Fish and Boat Code, Act of October 16, 1980, as amended, 30 Pa. C.S.A. § 101, et seq.

VI. Purdon's Statutes - Title 32 (Forests, Waters and State Parks)

(Relating to water power and water supply permits), Act of June 14, 1923, as amended, 32 P.S. § 591, et seq.

Water Well Drillers License Act, Act of May 29, 1956, as amended, 32 P.S. § 645.1, et sec.

(Relating to Flood Control Districts), Act of August 7, 1936, as amended, 32 P.S. § 653, et seq.

Flood Plain Management Act, Act of October 4, 1978, as amended, 32 P.S. § 679.101, et seq.

Storm Water Management Act, Act of October 4, 1978, as amended, 32 P.S. § 680.1, et seq.

Dam Safety and Encroachments Act, Act of November 26, 1978, as amended, 32 P.S. § 693.1, et seq.

(Relating to Stream Clearance), Act of June 5, 1947, as amended, 32 P.S. § 701, et seq.

(Relating to Potomac River Pollution), Act of May 29, 1945 (P.L. 1134, § 1), as amended, 32 P.S. 741 et seq. *Repealed in Part*. Section 4 of Act 1981, May 1, P.L. 22 No. 9, repeals this section to "the extent it required one of the members of the Interstate Commission on the Potomic River Basin to be a member of the Pennsylvania Commission on Interstate Cooperation."

(Relating to Schuylkill River pollution), Act of June 4, 1945, as amend., 32 P.S. § 751.1, et seq.

(Relating to Delaware River pollution) Act of April 19, 1945 as amend.32 P.S. § 815.31, et seq.

Delaware River Basin Compact, Act of July 7, 1961, as amended, 32 P.S. § 815.101, et seq.

Ohio River Valley Water Sanitation Compact, Act of April 2, 1945, as amended, 32 P.S. § 816.1, et seq.

Great Lakes Basin Compact, Act of March 22, 1956, as amended, 32 P.S. § 817.1, et seq.

Brandywine River Valley Compact, Act of September 9, 1959, as amend. 32 P.S. § 818, et seq.

Wheeling Creek Watershed Protection and Flood Prevention District Compact, Act of August 2, 1967, as amended, 32 P.S. § 819.1, et seq.

Susquehanna River Basin Compact, Act of July 17, 1968, as amended, 32 P.S. § 820.1, et seq.

Chesapeake Bay Commission Agreement, Act of June 25, 1985, as amended, 32 P.S. § 820.11, et seq.

(Relating to Preservation and Acquisition of Land for Open Space Uses), Act of January 19, 1968, as amended, 32 P.S. § 5001, et seq.

Land and Water Conservation and Reclamation Act, Act of January 19, 1968, § 2), as amended, 32 P.S. § 5101, et seq.

Bluff Recession and Setback Act, Act of May 13, 1980, as amended, 32 P.S. § 5201, et seq.

Wild Resource Conservation Act, Act of June 23, 1982, as amended, 32 P.S. § 5301, et seq.

VII. Purdon's Statutes - Title 34 (Game)

The Game and Wildlife Code, Act of July 8, 1986, as amended, 34 Pa. C.S.A. § 101, et seq.

VIII. Purdon's Statutes - Title 35 (Health and Safety)

(Related to public eating and drinking places), Act of May 23, 1945, as amended, 35 P.S. 655.1 et seq. *Repealed in Part.* Section 6(b) of Act 1994, repealed this section in so far as it is inconsistent with said act (3 Pa. C.S.A. § 6501, et seq.). §§ 655.1 to 655.11. §§ 655.12a to 655.13a repealed by 2010, Nov. 23, P.L. 1039, No.106, § 8(2)(ii), effective in 60 days [Jan.24, 2011]

The Public Bathing Law, Act of June 23, 1931, as amended, 35 P.S. § 672, et seq.

The Clean Streams Law (Related to the protection of public water supply), Act of June 22, 1937, as amended, 35 P.S. § 691.1, et seq.

PA Safe Drinking Water Act, Act of May 1, 1984, as amended, 35 P.S. § 721.1, et seq.

PA Sewage Facilities Act, Act of January 24, 1966 as amended, 35 P.S. § 750.1, et seq. Repealed in Part. Section 15 of Act 1990, July 1, repealed this section insofar as it relates to fee payments.

PA Solid Waste-Resource Recovery Development Act, Act of July 20, 1974, as amended, 35 P.S. § 755.1, et seq.

(Related to pollution from abandoned coal mines), Act of December 15, 1965 as amended, 35 P.S. § 760.1, et seq.

Low-Level Radioactive Waste Disposal Act, Act of February 9, 1988, as amended, 35 P.S. § 7130.101, et seq.

(Related to Camp Regulation), Act of November 10, 1959 as amended 35 P.S. § 3001, et seq.

Air Pollution Control Act, Act of January 8, 1960, as amended 35 P.S. § 4001, et seq.

Solid Waste Management Act, Act of July 7, 1980 as amended, 35 P.S. § 6018.101, et seq. *Repealed in Part.* Section 905(b) of Act 1988, Feb. 9, the Low-Level Radioactive Waste Disposal Act (35 P.S. § 7130.101, et seq.), repealed this section insofar as it is inconsistent with said act.

Radiation Protection Act, Act of July 10, 1984, as amended, 35 P.S. 7110.101, et seq. *Repealed in Part*. Section 17(b) of Act 1992, Dec. 18, provides that this section is repealed insofar as it is inconsistent with said act. Section 6(3) of 2007, July 13, P.L. 95, No. 31, imd. Effective, provides that "[a]ll other acts and parts of acts are repealed insofar as they are inconsistent with this act.

Worker and Community Right-to-Know Act, Act of October 5, 1984 as amended, 35 P.S. § 7301, et seq.

IX. Purdon's Statutes - Title 36 (Highways and Bridges)

State Highway Law, Act of June 1, 1945, as amended, 36 P.S. § 670-101, et seq. *Repealed in Part*. Section 4 of Act 1985, July 3, repealed this act insofar as it's inconsistent with said act.

Junkyards and Automotive Recycler Screen Law, Act of July 28, 1966, as amended, 36 P.S. § 2719.1, et seq.

Highway Vegetation Control Act of December 20, 1983 as amended, 36 P.S. § 2720.1, et seq.

X. Purdon's Statutes – Title 37 APPENDIX (Historical & Museums)

History Code, Act of May 26, 1988, as amd, 37 Pa.C.S.A. § 101, et seq.

XI. Purdon's Statutes - Title 43 (Labor)

General Safety Law
(Related to General Safety), Act of May 18, 1937, as amended, 43 P.S. § 25-1, et seq.

Seasonal Farm Labor Act, Act of June 23, 1978, as amended, 43 P.S. § 1301.101, et seq.

XII. Purdon's Statutes - Title 52 (Mines and Mining)

Coal Refuse Disposal Control Act of September 24, 1968, as amended, 52 P.S. § 30.51, et seq.

Surface Mine Land Acquisition & Reclamation Law
(Related to Coal Land Improvement), Act of July 19, 1965, as amended, 52 P.S. § 30.101, et seq.

Mine Fire and Subsidence Remedial Project Indemnification Law
(Related to Mine Fires & Subsidence),Act of April 3,1968, as amd. 52 P.S. § 30.201, et seq.

PA Anthracite Coal Mine Act, Act of November 10, 1965 as amended, 52 P.S. § 70-101, et seq.

(Related to discharge of coal into streams), Act of June 27, 1913 as amended, 52 P.S. § 631, et seq.

(Caving-in, Collapse, Subsidence), Act of May 27, 1921, as amended, 52 P.S. § 661, et seq.

Anthracite Coal Mining Regulation Law
(Related to Subsidence), Act of September 20, 1961 as amended, 52 P.S. § 672.1, et seq.

Anthracite Strip Mining and Conservation Act, Act of June 27, 1947 as amended, 52 P.S. § 681.1, et seq. Repealed in Part. Section 16 of Act 1971, Nov. 30, provided that this section repealed insofar as it is inconsistent with Act No. 147.

Anthracite Mine Drainage Law
(Related to control and drainage of water from coal formations), Act of July 7, 1955 as amended, 52 P.S. § 682, et seq.

Bituminous Coal Mine Safety Act, Act of July 7, 2008, 52 P.S. § 690-101, et seq.

(Related to Abandoned Mines – abandoned mines; sealing entries and air shafts), Act of May 7, 1935, as amended, 52 P.S. § 809, et seq.

(Related to maps and plans of mines), Act of June 15, 1911, as amended, 52 P.S. § 823.

Surface Mining Conservation and Reclamation Act, Act of May 31, 1945 as amended, 52 P.S. § 1396.1 et seq. *Repealed in Part.* Section 27 of Act 1984, Dec. 19, provides that, except as provided in § 3304 of this title, this section "is repealed to the extent that it applies to the surface mining of minerals other than bituminous and anthracite coal."

The Bituminous Mine Subsidence and Land Conservation Act, Act of April 27, 1966, as amended, 52 P.S. § 1406.1, et seq

Bituminous Mine Subsidences in Counties of the Second Class. (Related to cave-in or subsidence of surface above mines), Act of July 2, 1937, as amended, 52 P.S. § 1407, et seq.

(Related to Coal Stripping – Coal stripping Operation Defined), Act of June 18, 1941 as amended, 52 P.S. § 1471, et seq.

(Related to Coal under State Lands – Easements and Rights of Way), Act of June 1, 1933 as amended, 52 P.S. § 1501, et seq.

(Related to Mining Safety Zones – Establishment of Safety Zones), Act of Dec. 22, 1959 as amended, 52 P.S. § 3101, et seq. *Repealed in Part* – Act 1959, Dec. 22, P.L. 1994, No. 729 [52 P.S. §§3101 TO 3109], is repealed to the extent applicable to bituminous coal mines by 2008, July 7, P.L. 654, No. 55, §3101(b)(3), effective in 180 days [Jan. 5, 2009]

(Coal and Clay Mine Coal Subsidence Insurance Fund Law), Act of August 23, 1961 as amended, 52 P.S. § 3201, et seq.

Interstate Mining Compact, Act of May 5, 1966 as amended, 52 P.S. § 3251, et seq.

Noncoal Surface Mining Conservation and Reclamation Act, Act of December 19, 1984, as amended, 52 P.S. § 3301, et seq.

XIII. Purdon's Statutes - Title 58 (Oil and Gas)

Oil and Gas Conservation Law, Act of July 25, 1961 as amended, 58 P.S. § 401, et seq.

PA Used Oil Recycling Act, Act of April 9, 1982, as amended, 58 P.S. § 471, et seq.

Coal & Gas Resource Coord.Act, Act of Dec.18, 1984, as amended, 58 P.S. § 501, et seq.

(Relates to oil and gas), Act of February 14, 2012, 58 Pa. C.S.A. § 3201, et seq.

XIV. Purdon's Statutes Title 63 (Professions and Occupations)

Water and Wastewater Systems Operators' Certification Act, Act of November 18, 1968 as amended, 63 P.S. § 1001, et seq.

XV. Purdon's Statutes - Title 64 (Public Lands)

PA Appalachian Trail Act, Act of April 28, 1978, as amended, 64 P.S. § 801, et seq.

XVI. Purdon's Statutes - Title 71 (State Government)

The Administrative Code of 1929, Act of April 9, 1929 as amended, 71 P.S. § 51, et seq.

XVII. Purdon's Statutes - Title 72 (Taxation and Fiscal Affairs)

Project 70 Land Acquisition and Borrowing Act, Act of June 22, 1964 as amended, 72 P.S. § 3946.1, et seq.

(Related to pollution control services), Act of March 4, 1971 as amended, 72 P.S. § 7602.1, et seq. Deleted Section 7602.5 by the Act 2000, May 24. *Repealed in Part.* Section 7602.3 of the Act 2007, Dec. 18, was repealed to effectuate the enactment of 35 P.S. § 6021.4.

XVIII. Purdon's Statutes - Title 73 (Trade and Commerce)

Infrastructure Development Act, Act of July 11, 1996, as amended, 73 P.S. § 393.21, et seq.

(Related to Explosives), Act of July 1, 1937 as amended, 73 P.S. § 151, et seq.; *Suspended in Part*. This section is suspended insofar as it is in conflict with the provisions of Reorganization Plan No. 8 of 1981. *See* 71 P.S. § 751-35.

(Related to Explosives), Act of July 10, 1957 as amended, 73 P.S. § 164, et seq. *Suspended in Part*. Section 164 is suspended insofar as it is in conflict with the provisions of Reorganization Plan No. 8 of 1981. *See* 71 P.S. § 751-35.

Purchase of Black Powder in Contiguous States
(Related to Black Powder), Act of May 31, 1974, 73 P.S. § 169 et seq.
(Related to excavation and demolition), Act of Dec.10, 1974 as amended, 73 P.S. § 176, et seq.

XIX. Purdon's Statutes - Title 75 (Vehicles)

Vehicle Code, Act of June 17, 1976, as amended., 75 Pa. C.S.A. § 101, et seq.
Snowmobile and All-Terrain Vehicle Law, Act of June 17, 1976, as amended, 75 Pa. C.S.A. § 7701, et seq.

(Related to hazardous materials transportation), Act of June 30, 1984, 75 Pa. C.S.A. § 8301, et seq.

XX. Purdon's Statutes - Title 77 (Workmen's Compensation)

Workers' Compensation Act, Act of June 2, 1915 as amended, 77 P.S. § 1, et seq.
PA Occupational Disease Act, Act of June 21, 1939, as amended, 77 P.S. § 1201, et seq.

XXI. . Other Statutes

Infectious and Chemotherapeutic Waste Disposal
(Relating to Medical Waste-Manifesting and Transporter Licensing), Act of July 13, 1988, 35 P.S. § 6019.1, et seq.

Municipal Waste Planning, Recycling and Waste Reduction Act, Act of July 28, 1988, 53 P.S. § 4000.1501.

Hazardous Sites Cleanup Act, Act of October 18, 1988, 35 P.S. § 6020.101. Repealed insofar as inconsistent with the Hazardous Sites Cleanup Fund Funding Act, 35 P.S. § 6021.1 ET SEQ., PURSUANT TO 2007, Dec. 18, P.L. 486, No. 77, § 18(b) imd. effective

XXII. . Pennsylvania Constitution - Article I, Section 27 (Adopted May 18, 1971)

FEDERAL LAW

Acid Precipitation Act of 1980 (42 U.S.C. § 8901-8912).

Act to Prevent Pollution from Ships (33 U.S.C. § 1901-1915).

Americans with Disabilities Act of 1990, (42 U.S.C. § 12101-12213 and 47 U.S.C. § 225 and 611).
Asbestos Hazard Emergency Response Act of 1986 [see Toxic Substances Control Act secs. 201-214 (15 U.S.C. § 2641-2656)].

Atomic Energy Act of 1954 (42 U.S.C. § 2014, 2021, 2021a, 2022, 2111, 2113, 2114).

Aviation Safety and Noise Abatement Act of 1979 (49 U.S.C. § 47501-47510).

Clean Air Act (42 U.S.C. § 7401-7642).

Clean Water Act [see Federal Water Pollution Control Act].

Coastal Zone Management Act of 1972 (16 U.S.C. § 1451-1466).

Comp.Env.Response, Compensation, and Liability Act of 1980 (42 U.S.C. § 9601-9675).

Emergency Planning and Community Right-to-Know Act of 1986 (42 U.S.C. § 11001-11050).

Energy Supply and Environmental Coordination Act of 1974 (15 U.S.C. § 791-798).

Environmental Quality Improvement Act of 1970 (42 U.S.C. § 4371-4375).

Federal Insecticide, Fungicide, and Rodenticide Act (7 U.S.C. § 136-136y).

Federal Land Policy and Management Act of 1976 (43 U.S.C. § 1701-1784).

Federal Water Pollution Control Act (33 U.S.C. § 1251-1387).

Geothermal Energy R& Development, Demonstration Act of 1974 (30 U.S.C. § 1101-1164).

Global Climate Protection Act of 1987 (15 U.S.C. § 2901 note).

Hazardous Substance Response Revenue Act 1980 (see 26 U.S.C. § 4611, 4612, 4661, 4662).

Low-Level Radioactive Waste Policy Act (42 U.S.C. § 2021b-2021d).

Marine Protection, Research, and Sanctuaries Act of 1972 (33 U.S.C. § 1401-1445)

National Climate Program Act (15 U.S.C. § 2901-2908).

National Environmental Policy Act of 1969 (42 U.S.C. § 4321-4370h).
Noise Control Act of 1972 (42 U.S.C. § 4901-4918).

Nuclear Waste Policy Act of 1982 (42 U.S.C. § 10101-10270).

Outer Continental Shelf Land Act Amendments of 1978 (43 U.S.C. § 1801-1866).

Public Health Service Act (42 U.S.C. § 300f-300j-11).

Safe Drinking Water Act [Public Health Service Act 1401-1451 (42 U.S.C. § 300f-300j-26)].

Soil and Water Resources Conservation Act of 1977 (16 U.S.C. § 2001-2009).

Solid Waste Disposal Act (42 U.S.C. § 6901-6991i).

Surface Mining Control and Reclamation Act of 1977 (30 U.S.C. § 1201-1328)

Toxic Substances Control Act (15 U.S.C. § 2601-2695d).
Uranium Mill Tailings Radiation Control Act of 1978 (42 U.S.C. § 7901-7942).

Water Resources Research Act of 1984 (42 U.S.C. § 10301-10309).

APPENDIX O

- Prevailing Wage Rates

BUREAU OF LABOR LAW COMPLIANCE
PREVAILING WAGES PROJECT RATES

Project Name:	DGS Small GESA-4
Awarding Agency:	DGS
Contract Award Date:	2/15/2017
Serial Number:	16-06461
Project Classification:	Heavy/Highway
Determination Date:	11/15/2016
Assigned Field Office:	Pittsburgh
Field Office Phone Number:	(412)565-5300
Toll Free Phone Number:	(877)504-8354
Project County:	Erie County

BUREAU OF LABOR LAW COMPLIANCE
PREVAILING WAGES PROJECT RATES

Project: 16-06461 - Building	Effective Date	Expiration Date	Hourly Rate	Fringe Benefits	Total
Asbestos & Insulation Workers	8/1/2015		$33.67	$23.20	$56.87
Boilermakers	6/1/2014		$40.90	$26.16	$67.06
Bricklayer	11/1/2016		$27.47	$19.53	$47.00
Carpenters, Drywall Hangers, Framers, Instrument Men, Lathers, Soft Floor Layers	5/1/2016		$28.86	$14.20	$43.06
Carpenters, Drywall Hangers, Framers, Instrument Men, Lathers, Soft Floor Layers	5/1/2017		$29.34	$14.78	$44.12
Cement Masons	5/1/2016		$25.66	$16.54	$42.20
Dockbuilder, Pile Drivers	1/1/2016		$32.03	$17.53	$49.56
Drywall Finisher	5/1/2016		$21.87	$16.70	$38.57
Electric Lineman	1/1/2016		$53.02	$20.78	$73.80
Electric Lineman	9/3/2017		$55.66	$22.25	$77.91
Electric Lineman	9/4/2016		$54.43	$21.39	$75.82
Electric Lineman	1/1/2017		$54.20	$21.63	$75.83
Electric Lineman	9/1/2014		$52.19	$17.09	$69.28
Electricians & Telecommunications Installation Technician	6/6/2016		$30.00	$23.13	$53.13
Elevator Constructor	1/1/2016		$44.80	$30.29	$75.09
Glazier	6/1/2016		$27.45	$8.20	$35.65
Iron Workers (Bridge, Structural Steel, Ornamental, Precast, Reinforcing)	6/1/2016		$28.70	$27.26	$55.96
Laborers (Class 01 - See notes)	5/1/2016		$21.23	$15.93	$37.16
Laborers (Class 02 - See notes)	5/1/2016		$21.73	$15.93	$37.66
Landscape Laborer	1/1/2016		$20.51	$13.49	$34.00
Landscape Laborer (Skilled)	1/1/2016		$20.93	$13.49	$34.42
Landscape Laborer (Tractor Operator)	1/1/2016		$21.23	$13.49	$34.72
Marble Finisher	6/1/2015		$22.55	$12.79	$35.34
Marble Mason	12/1/2014		$19.43	$10.00	$29.43
Millwright	6/1/2016		$38.91	$18.14	$57.05
Millwright	6/1/2017		$39.83	$18.57	$58.40
Operators (Class 01 - see notes)	5/1/2016		$29.00	$16.09	$45.09
Operators (Class 01 - see notes)	5/1/2017		$29.35	$16.59	$45.94
Operators (Class 02 -see notes)	5/1/2016		$28.33	$16.09	$44.42
Operators (Class 02 -see notes)	5/1/2017		$28.68	$16.59	$45.27
Operators (Class 03 - See notes)	5/1/2016		$24.75	$16.09	$40.84
Operators (Class 03 - See notes)	5/1/2017		$25.00	$16.59	$41.59
Operators (Class 04 - Surveying Instrument Man)	5/1/2017		$25.29	$16.59	$41.88
Operators (Class 04 - Surveying Instrument Man)	5/1/2016		$25.04	$16.09	$41.13
Operators (Class 04 - Surveying Instrument Man)	5/1/2015		$24.79	$15.59	$40.38
Operators (Class 04 - Surveying Party Chief)	5/1/2015		$25.52	$15.59	$41.11
Operators (Class 04 - Surveying Party Chief)	5/1/2017		$26.02	$16.59	$42.61
Operators (Class 04 - Surveying Party Chief)	5/1/2016		$25.77	$16.09	$41.86
Operators (Class 04 - Surveying Rodman/Chainman)	5/1/2015		$24.50	$15.59	$40.09
Operators (Class 04 - Surveying Rodman/Chainman)	5/1/2017		$25.00	$16.59	$41.59
Operators (Class 04 - Surveying Rodman/Chainman)	5/1/2016		$24.75	$16.09	$40.84
Painters (Brush and Roller)(Commercial)	5/1/2016		$21.62	$16.70	$38.32

BUREAU OF LABOR LAW COMPLIANCE
PREVAILING WAGES PROJECT RATES

Project: 16-06461 - Building	Effective Date	Expiration Date	Hourly Rate	Fringe Benefits	Total
Painters (Brush and Roller)(Commercial)	5/1/2015		$21.09	$16.33	$37.42
Painters (Spray and Sandblasting)(Commercial)	5/1/2015		$21.84	$16.33	$38.17
Painters (Spray and Sandblasting)(Commercial)	5/1/2016		$22.37	$16.70	$39.07
Painters Class 6 (see notes)	5/1/2016		$21.87	$16.70	$38.57
Pile Driver Divers (Building, Heavy, Highway)	1/1/2016		$48.10	$17.37	$65.47
Piledrivers	1/1/2016		$32.03	$17.37	$49.40
Plasterers	6/1/2016		$23.87	$14.18	$38.05
Plumbers	6/1/2016		$36.78	$21.02	$57.80
Plumbers	6/1/2017		$37.78	$21.02	$58.80
Pointers, Caulkers, Cleaners	6/1/2016		$29.25	$17.76	$47.01
Roofers	5/1/2016		$27.44	$14.27	$41.71
Roofers	5/1/2017		$28.59	$14.27	$42.86
Roofers	5/1/2013		$25.87	$12.60	$38.47
Sheet Metal Workers	7/1/2015		$33.50	$25.36	$58.86
Sheet Metal Workers	7/1/2018		$34.72	$27.83	$62.55
Sheet Metal Workers	7/1/2016		$33.76	$26.37	$60.13
Sheet Metal Workers	7/1/2017		$33.95	$27.49	$61.44
Sprinklerfitters	4/1/2018		$38.80	$22.74	$61.54
Sprinklerfitters	4/1/2017		$37.40	$21.74	$59.14
Sprinklerfitters	4/1/2016		$36.05	$21.02	$57.07
Steamfitters	6/1/2016		$38.51	$19.61	$58.12
Steamfitters	6/1/2017		$39.71	$19.01	$58.72
Stone Masons	12/1/2011		$30.97	$16.80	$47.77
Terrazzo Finisher	6/1/2016		$30.33	$14.75	$45.08
Terrazzo Mechanics	6/1/2016		$30.15	$16.48	$46.63
Tile Finisher	6/1/2016		$24.30	$14.18	$38.48
Tile Setter	6/1/2016		$30.08	$18.23	$48.31
Truckdriver class 1(see notes)	1/1/2016		$27.62	$16.60	$44.22
Truckdriver class 2 (see notes)	1/1/2016		$27.75	$16.69	$44.44
Truckdriver class 3 (see notes)	1/1/2016		$28.23	$16.98	$45.21

BUREAU OF LABOR LAW COMPLIANCE
PREVAILING WAGES PROJECT RATES

Project: 16-06461 - Heavy/Highway	Effective Date	Expiration Date	Hourly Rate	Fringe Benefits	Total
Carpenter Welder	1/1/2016		$32.38	$16.56	$48.94
Carpenters	1/1/2016		$31.68	$16.56	$48.24
Cement Finishers	1/1/2016		$29.75	$18.49	$48.24
Iron Workers (Bridge, Structural Steel, Ornamental, Precast, Reinforcing)	6/1/2016		$28.70	$27.26	$55.96
Laborers (Class 01 - See notes)	1/1/2016		$24.48	$20.02	$44.50
Laborers (Class 02 - See notes)	1/1/2016		$24.64	$20.02	$44.66
Laborers (Class 03 - See notes)	1/1/2016		$25.03	$20.02	$45.05
Laborers (Class 04 - See notes)	1/1/2016		$25.48	$20.02	$45.50
Laborers (Class 05 - See notes)	1/1/2016		$25.89	$20.02	$45.91
Laborers (Class 06 - See notes)	1/1/2016		$22.73	$20.02	$42.75
Laborers (Class 07 - See notes)	1/1/2016		$25.48	$20.02	$45.50
Laborers (Class 08 - See notes)	1/1/2016		$26.98	$20.02	$47.00
Operators (Class 01 - see notes)	1/1/2016		$30.19	$19.18	$49.37
Operators (Class 02 -see notes)	1/1/2016		$29.93	$19.18	$49.11
Operators (Class 03 - See notes)	1/1/2016		$26.28	$19.18	$45.46
Operators (Class 04 - See notes)	1/1/2016		$25.82	$19.18	$45.00
Operators (Class 05 - See notes)	1/1/2016		$25.57	$19.18	$44.75
Painters (Bridges, Stacks, Towers)	5/1/2016		$24.12	$16.70	$40.82
Painters (Brush and Roller)(Industrial)	5/1/2016		$22.12	$16.70	$38.82
Painters (Spray and Sandblasting)(Industrial)	5/1/2016		$22.87	$16.70	$39.57
Piledrivers	1/1/2016		$32.03	$17.37	$49.40
Steamfitters (Heavy and Highway - Gas Distribution)	5/1/2016		$39.62	$31.18	$70.80

WEEKLY PAYROLL CERTIFICATION FOR PUBLIC WORKS PROJECTS

☐ Contractor or ☐ Subcontractor (Please check one) ALL INFORMATION MUST BE COMPLETED

CONTRACTOR ADDRESS	SUBCONTRACTOR ADDRESS	LABOR & INDUSTRY BUREAU OF LABOR LAW COMPLIANCE PREVAILING WAGE DIVISION 7TH & FORSTER STREETS HARRISBURG, PA 17120 1-888-932-0665
PAYROLL NUMBER / WEEK ENDING DATE	PROJECT AND LOCATION PROJECT SERIAL # PROJECT #	

EMPLOYEE NAME	APPR. RATE (%)	WORK CLASSIFICATION	DAY AND DATE / HOURS WORKED EACH DAY	S-TIME O-TIME	BASE HOURLY RATE	TOTAL FRINGE BENEFITS (C=Cash) (FB=Contributions)*	TOTAL DEDUCTIONS	GROSS PAY FOR PREVAILING RATE JOB(S)	CHECK #
						C: FB:			
						C: FB:			
						C: FB:			
						C: FB:			
						C: FB:			

*SEE REVERSE SIDE PAGE NUMBER ___ ___ OF ___

LLC-25 REV 10-03 (Page 1)

THE NOTARIZATION MUST BE COMPLETED ON FIRST AND LAST SUBMISSIONS ONLY. ALL OTHER INFORMATION MUST BE COMPLETED WEEKLY.

*FRINGE BENEFITS EXPLANATION (FB): Bona fide benefits contribution, except those required by Federal or State Law (unemployment tax, workers' compensation, income taxes, etc.)

Please specify the type of benefits provided and contributions per hour:

1) Medical or hospital care _____
2) Pension or retirement _____
3) Life insurance _____
4) Disability _____
5) Vacation, holiday _____
6) Other (please specify) _____

CERTIFIED STATEMENT OF COMPLIANCE

1. The undersigned, having executed a contract with _____ (AWARDING AGENCY, CONTRACTOR OR SUBCONTRACTOR) _____ for the construction of the above-identified project, acknowledges that:
   (a) The prevailing wage requirements and the predetermined rates are included in the aforesaid contract.
   (b) Correction of any infractions of the aforesaid conditions is the contractor's or subcontractor's responsibility.
   (c) It is the contractor's responsibility to include the Prevailing Wage requirements and the predetermined rates in any subcontract or lower tier subcontract for this project.

2. The undersigned certifies that:
   (a) Neither he nor his firm, nor any firm, corporation or partnership in which he or his firm has an interest is debarred by the Secretary of Labor and Industry pursuant to Section 11(e) of the PA Prevailing Wage Act, Act of August 15, 1961, P.L. 987 as amended, 43 P.S.§ 165-11(e).
   (b) No part of this contract has been or will be subcontracted to any subcontractor if such subcontractor or any firm, corporation or partnership in which such subcontractor has an interest is debarred pursuant to the aforementioned statute.

3. The undersigned certifies that:
   (a) the legal name and the business address of the contractor or subcontractor are: _____
   (b) The undersigned is: ☐ a single proprietorship ☐ a corporation organized in the state of _____ ☐ a partnership ☐ other organization (describe) _____
   (c) The name, title and address of the owner, partners or officers of the contractor/subcontractor are:

NAME	TITLE	ADDRESS

The willful falsification of any of the above statements may subject the contractor to civil or criminal prosecution, provided in the PA Prevailing Wage Act of August 15, 1961, P.L. 987, as amended, August 9, 1963, 43 P.S. § 165.1 through 165.17.

_____ (DATE)

_____ (SIGNATURE)

_____ (TITLE)

_____ SEAL

Taken, sworn and subscribed before me this _____ Day of _____ A.D., _____

ASBESTOS REMOVAL -- ASBESTOS WORKER/LABORER

AMENDED FOR 11/21/97

The removal of asbestos containing materials should be handled as follows:

1. The removal of all insulation materials, whether they contain asbestos or not, from mechanical systems (pipes, boilers, ducts, flues, breachings, etc.) will be recognized as work to be classified as Asbestos Worker.
2. On all mechanical systems (pipes, boilers, ducts, flues, breachings, etc.) that are going to be scrapped, the removal of all insulating material, whether they contain asbestos or not, will be classified as Laborers.
3. The removal of all asbestos containing materials from walls, ceilings, floors, columns and all other non-mechanical structures and surfaces, etc., will be held to the classification of Laborers (with the exception of roofing materials).
4. The term "removal" shall not include sealing, labeling and dropping of scrap material into appropriate containers. After the drop, the final disposal will be classified as Laborers.
5. The loading at the designated area of all materials that have been removed, bagged and tagged, as well as clean-up and all unloading, burying and other work required at the disposal site should be classified as Laborers.

Copyright © 2010 Commonwealth of Pennsylvania

The following percentage[illegible] apprentices [illegible]
REGISTERED WITH THE COMMONWEALTH OF PENNSYLVANIA IN AN APPROVED PROGRAM.
The employer may also pay the apprentice the percentages listed in the state approved program under which the apprentice is registered.

The rates are listed in % of Journeyman rate and in six-month intervals.

Asbestos and Insulation Workers

45	45	48	50	55	60	65	70	75	80

Boilermakers

60	65	70	75	80	85	90	95		

Bricklayers

50	50	60	65	70	75	80	90		

Carpenters

35	40	45	50	60	65	75	80	85	90

Cement Finishers

50	50	75	75	90	90				

Dockbuilders/Piledrivers

60	65	70	75	80	85				

Drywall Finishers

40	50	60	70	80	90				

Electricians (1500 hour periods)

30	35	40	50	60	75				

Floor Layers

45	51	57	63	69	75	82	88		

Glaziers

35	40	50	55	60	70	80	90		

Iron Workers

55	55	65	65	75	75	85	85		

Building Laborers

50	60	70	80						

Painters

40	55	65	75	85	90				

Plasterers

50	60	65	70	75	80	85	90		

Plumbers

40	45	55	65	80	90				

Roofers

47	47	52	52	60	60	75	75		

Sheetmetal

40	45	50	55	60	65	70	80		

Sprinklerfitters

35	40	45	50	55	60	65	70	75	80

Steamfitters

34	39	44	48	53	58	63	68	73	80

Tile Layer

50	50	60	65	70	75	80	90		

APPENDIX P

- DCNR Western Region Site Plans

For site maps and directions to the DCNR Parks and Forest sites in this project please visit the DCNR website:
http://www.dcnr.state.pa.us/learn/interactivemapresources/index.htm

Contact Information for the sites:

DCNR GESA PROJECT PHASE ONE (ADMINISTERED BY DGS):

FOREST DISTRICTS:

1. FD # 4 Forbes
   Manager: Edward A. Callahan
   Phone: 724.238.1200

2. FD # 6 Gallitzin
   Manager: Robert Wetzel
   Phone: 814.472.1862

3. FD # 8 Clear Creek
   Manager: Gary L. Frank
   Phone: 814.226.1901

4. FD # 14 Cornplanter
   Manager: Cecile M. Stelter
   Phone: 814.723.0262

PARK REGION TWO:

1. Allegheny Islands State Park
   c/o Point State Park
   Manager: **Kevin Blair**
   Phone: 724-865-9849
   No Infrastructure

2. Clear Creek State Park
   Manager: **Ryan Borcz**
   Asst Mgr: **Jared Fencil**
   Phone: 814.752-2368

3. Cook Forest State Park
   Manager: **Ryan Borcz**
   Maint Supervisor 1: **Joseph Northey**
   Maint Supervisor 2: **Melvin (John) Sleppy**
   Phone: 814.744.8407

4. Erie Bluffs State Park
   c/o Presque Isle State Park
   Manager: **Mathew Greene**
   Phone: 814.833.7424
   Possibly no infrastructure

5. Hillman State Park
   c/o Raccoon Creek State Park
   Manager: **Al Wasilewski**
   Phone: 724.899.2200
   PGC property that we manage

6. Jennings Environmental Education Center
   Manager: Wilbur Taylor
   Phone: 724.794-2649

7. Keystone State Park
   Manager: Kris Baker
   Maint Supervisor 1: Jeff Gaul
   Phone: 724.668.2939

8. Kooser State Park
   Manager: **Michael Mumau**
   Assist Mgr: **James McCorkle**
   Phone: 814.445.7725 ex. 13

9. Laurel Hill State Park
   Manager: **Michael Mumau**
   Maint Supervisor 1: **Rick Shaulis**
   Maint Supervisor 2: **Edward Howard**
   Phone: 814.445.7725

10. Laurel Mountain State Park
    c/o Linn Run State Park
    Manager: **Douglas Finger**
    Phone: 724.238.6623

11. Laurel Ridge State Park
    Manager: **Michael Mumau**
    Phone: 724.455.3744

12. Laurel Summit State Park
    c/o Linn Run State Park
    Manager: **Douglas Finger**
    Phone: 724.238.6623

13. Linn Run State Park
    Manager: **Douglas Finger**
    Phone: 724.238.6623

14. Maurice K. Goddard State Park
    Manager: Bill Wasser
    Maint Supervisor 1: Daniel Freer
    Phone: 724.253.4833

15. McConnells Mill State Park
    c/o Moraine State Park
    Manager: **Dustin Drew**
    Asst. Mgr: **Jacob Weiland**
    Phone: 724.368.8811

16. Moraine State Park
    Manager: **Dustin Drew**
    Maint Supervisor 1: **Douglas Thompson**
    Maint Supervisor 2: **Greg Patterson**
    Phone: 724.368.8811

17. Ohiopyle State Park
    Manager: Kenneth Bisbee
    Maint Supervisor 2: Kevin Ravenscroft
    Phone: 724.329.8591

18. Oil Creek State Park
    Manager: David Hallman
    Maint Supervisor 1: Joseph Guthrie
    Phone: 814.676.5915

19. Point State Park
    Manager: Jake Weiland
    Phone: 412-565-2850
    Maint Supervisor 1:
    Andy Pelesky

20. Presque Isle State Park
    Manager: **Mathew Greene**
    Maint Supervisor 1: **Terry Dennis**
    Maint Supervisor 2: **Rick Zemanek**
    Phone: 814.833.7424

21. Pymatuning State Park
    Manager: Dan Bickel
    Maint Supervisor 1: Terry Hutchinson
    Maint Supervisor 2: Thomas Woodworth
    Phone: 724.932.3142

22. Raccoon Creek State Park
    Manager: **Al Wasilewski**
    Maint Supervisor 2 : **Curtis McDowell**
    Phone: 724.899.2200

23. Ryerson Station State
    Park Manager: Alan Johnson
    Phone: 724.428.4254
    Under redesigning of park

24. Yellow Creek State Park
    Manager: James Tweardy
    Maint Supervisor 1: Shawn Cole
    Phone: 724.357.7913
    Our Pilot Green Park

DATE OF ISSUE: DECEMBER 6, 2016

DEPARTMENT OF GENERAL SERVICES
RESOURCE AND ENERGY MANAGEMENT OFFICE
401 NORTH STREET
HARRISBURG, PENNSYLVANIA

BULLETIN NO. 1
on

Project No. Small GESA-4 – REQUEST FOR PROPOSALS FOR A GUARANTEED ENERGY SAVINGS PROJECT AT: DEPT. OF CONSERVATION AND NATURAL RESOURCES, PARKS AND FOREST, WESTERN PENNSYLVANIA, Department of General Services, Energy & Resource Management, 401 North Street, Room 403, Harrisburg, Pennsylvania, 17120.

PROPOSAL SUBMISSION DEADLINE, FRIDAY FEBRUARY 10, 2017
TIME OF OPENING: 11:00 AM

RFP CLARIFICATIONS/CHANGES

1. On page 3, next to "Proposal Results At…" change "www.dgs.state.pa.us, Construction and Public Works tab" to **"www.dgs.pa.gov Menu Path: State Government > Facilities & Space Management > Energy Savings Programs"**

2. On Page 24, in Section 1.36 "Calendar of Events" remove "DGS Corporate Board Room 18th & Herr Streets, Harrisburg, PA 17125" from the "Pre-Proposal Conference" box. A corrected "Calendar of Events" is on the next page.

REMAINDER OF PAGE INTENTIONALLY LEFT BLANK.

1.36 Calendar of Events:

Activity	Date
Notice to Proposers and RFP Issued	December 1, 2016
Pre-Proposal Conference	*11:00 AM on December 13, 2016*
Proposers' Deadline to Submit Questions	*January 25, 2017*
DGS' Deadline to Issue Bulletins	*February 1, 2017*
Proposal Submission Deadline Rebecca Tomlinson Issuing Officer 403 North Office Building 401 North Street Harrisburg, PA 17120	*By 11:00 a.m. on February 10, 2017*
Anticipated Date for Interviews with Proposers who received sufficient Technical Submission points	*February 23 & 24, 2017*
Anticipated Date for Announcement of Successful Proposer	*March 3, 2017*

R. Tomlinson

_____

Rebecca Tomlinson, RFP Coordinator
ENERGY & RESOURCE MANAGEMENT OFFICE

PLEASE ACKNOWLEDGE RECEIPT OF BULLETIN WITHIN 24 HOURS BY EMAIL RESPONSE TO REBECCA TOMLINSON AT retomlinso@pa.gov

NAME TITLE DATE

FIRM

DATE OF ISSUE: JANUARY 5, 2016

DEPARTMENT OF GENERAL SERVICES
RESOURCE AND ENERGY MANAGEMENT OFFICE
401 NORTH STREET
HARRISBURG, PENNSYLVANIA

BULLETIN NO. 2
on

Project No. Small GESA-4 – REQUEST FOR PROPOSALS FOR A GUARANTEED ENERGY SAVINGS PROJECT AT: DEPT. OF CONSERVATION AND NATURAL RESOURCES, PARKS AND FOREST, WESTERN PENNSYLVANIA, Department of General Services, Energy & Resource Management, 401 North Street, Room 403, Harrisburg, Pennsylvania, 17120.

PROPOSAL SUBMISSION DEADLINE, FRIDAY FEBRUARY 10, 2017
TIME OF OPENING: 11:00 AM

QUESTIONS/ANSWERS

1. Is there any way possible that a change to the Simple Payback requirements for the PA Small GESA program could be raised from 10 years to 14 or 15 years?

Answer: DGS will consider increasing the payback limitations if the ESCO discovers a savings opportunity that has a proven method and is desired by the funding agency.

R. Tomlinson

Rebecca Tomlinson, RFP Coordinator
ENERGY & RESOURCE MANAGEMENT OFFICE

PLEASE ACKNOWLEDGE RECEIPT OF BULLETIN WITHIN 24 HOURS BY EMAIL RESPONSE TO REBECCA TOMLINSON AT retomlinso@pa.gov

NAME TITLE DATE

FIRM

DATE OF ISSUE: JANUARY 13, 2017

DEPARTMENT OF GENERAL SERVICES
RESOURCE AND ENERGY MANAGEMENT OFFICE
401 NORTH STREET
HARRISBURG, PENNSYLVANIA

BULLETIN NO. 3
on

Project No. Small GESA-4 – REQUEST FOR PROPOSALS FOR A GUARANTEED ENERGY SAVINGS PROJECT AT: DEPT. OF CONSERVATION AND NATURAL RESOURCES, PARKS AND FOREST, WESTERN PENNSYLVANIA, Department of General Services, Energy & Resource Management, 401 North Street, Room 403, Harrisburg, Pennsylvania, 17120.

PROPOSAL SUBMISSION DEADLINE, FRIDAY FEBRUARY 10, 2017
TIME OF OPENING: 11:00 AM

REQUEST FOR INFORMATION

1. Please provide a list of all the Region 2 State Park buildings and their operating times as well as missing utility data from the remainder of the State Parks whose utility data was not originally included in the RFP.

   Answer: Please see the requested information on pages 2-40 of this bulletin.

R. Tomlinson

_____

Rebecca Tomlinson, RFP Coordinator
ENERGY & RESOURCE MANAGEMENT OFFICE

PLEASE ACKNOWLEDGE RECEIPT OF BULLETIN WITHIN 24 HOURS BY EMAIL RESPONSE TO REBECCA TOMLINSON AT retomlinso@pa.gov

NAME TITLE DATE

FIRM

Months of the Year

	Administrative							
Park Name	Administration Building	Office	Park Office	Forest District Office	Ranger Office	Marina Office	Resource Mgmt. Center	Control Comm. Center
Forest District 4 Forbes	12							
Forest District 6 Gallitzin				12	12			
Forest District 8 Clear Creek				12				
Forest District 14 Cornplanter		12		12				
Clear Creek State Park			8					
Cook Forest State Park	12		12		12			
Jennings Environmental Education Center		12						
Keystone State Park			12					
Kooser State Park			12					
Laurel Hill State Park			12					
Laurel Mountian State Park								
Laurel Ridge State Park								
Laurel Summit State Park								
Linn Run State Park								
Maurice K. Goddard State Park			12		8	7		
McConnells Mill State Park								
Moraine State Park			12			7		
Ohiopyle State Park			12		12			
Oil Creek State Park			12					
Point State Park	12							
Presque Isle State Park			12		12	7		
Pymatuning State Park			12		12			
Raccoon Creek State Park			12		12			
Ryerson Station State Park			12					
Yellow Creek State Park			12					

*Red numbers indicate a weighted average for multiple locations with different operating mo

Months of the Year

	Maintenance & Storage											
Park Name	Maintenance	Repair Garage	Garage	Cold Storage	Ice House	Hazardous Storage	Lumber Shed	Rescue Equipment Storage	Salt Storage	Shed	Vehicle Storage	Warehouse
Forest District 4 Forbes	12									12		
Forest District 6 Gallitzin	12	12				12				12		
Forest District 8 Clear Creek		12	12									
Forest District 14 Cornplanter	12	12	12									
Clear Creek State Park	12		12	12		12						
Cook Forest State Park	12		12			12	12			12		
Jennings Environmental Education Center	12						12					
Keystone State Park	12											
Kooser State Park												
Laurel Hill State Park	12	12										
Laurel Mountian State Park												
Laurel Ridge State Park	12											
Laurel Summit State Park												
Linn Run State Park												
Maurice K. Goddard State Park	12						12			12	12	
McConnells Mill State Park	12											
Moraine State Park	12		8									12
Ohiopyle State Park	12											
Oil Creek State Park	12		12									
Point State Park	12	12										
Presque Isle State Park	12	12					12			12		12
Pymatuning State Park	12	12	12	12						12	12	12
Raccoon Creek State Park	12	12	12			12	12					12
Ryerson Station State Park	12		12									
Yellow Creek State Park	12											

nths

						Bath, Toilet & Changing				
Park Name	Camper Storage Space	Ski Storage	Snowmobile Storage	Trailer	Sign Shop	Restroom	Bath/Shower/ Wash House	Changing/ Dressing Room	Comfort Station	Dressing Stockade
Forest District 4 Forbes										
Forest District 6 Gallitzin										
Forest District 8 Clear Creek										
Forest District 14 Cornplanter										
Clear Creek State Park						12	9		12	
Cook Forest State Park					12	12	9		12	
Jennings Environmental Education Center						12				
Keystone State Park						10	8	4		
Kooser State Park						8	12			
Laurel Hill State Park						12	8		12	
Laurel Mountian State Park										
Laurel Ridge State Park						12				
Laurel Summit State Park										
Linn Run State Park										
Maurice K. Goddard State Park					12	10.5				
McConnells Mill State Park									12	
Moraine State Park									8.5	
Ohiopyle State Park						8.5	8	8.5	12	
Oil Creek State Park										
Point State Park						6				
Presque Isle State Park					12	7.2	6			
Pymatuning State Park					12	12	8	6	8	6
Raccoon Creek State Park					12		4	4		
Ryerson Station State Park						12	5			
Yellow Creek State Park							7			

	Overnight										
Park Name	Cabin – Modern	Cabin – Rustic	Cottage	Camping Cottage	Inn	Chalet	Lodge	Hostel	Quonset Building	Yurt	YMCA Camp
Forest District 4 Forbes		12									
Forest District 6 Gallitzin											
Forest District 8 Clear Creek											
Forest District 14 Cornplanter											
Clear Creek State Park		12			12					12	
Cook Forest State Park		9			12						
Jennings Environmental Education Center											
Keystone State Park	12			8						8	
Kooser State Park	12	12									
Laurel Hill State Park				8			12				
Laurel Mountian State Park											
Laurel Ridge State Park											
Laurel Summit State Park											
Linn Run State Park											
Maurice K. Goddard State Park											
McConnells Mill State Park											
Moraine State Park	12										
Ohiopyle State Park				8.5						8.5	
Oil Creek State Park											
Point State Park											
Presque Isle State Park											
Pymatuning State Park	12										
Raccoon Creek State Park	12	4					12				
Ryerson Station State Park				12							
Yellow Creek State Park				7						7	

	Dwelling						Retail				
Park Name	Apartment	Barracks	Dormitory	Housing	Residence	Staff Quarters	Camp Store	Gift Shop	Rod & Gun Club	Golf Pro Shop	Trading Post
Forest District 4 Forbes											
Forest District 6 Gallitzin											
Forest District 8 Clear Creek											
Forest District 14 Cornplanter											
Clear Creek State Park					12						
Cook Forest State Park											
Jennings Environmental Education Center											
Keystone State Park					12						
Kooser State Park					12						
Laurel Hill State Park		5			12			4			
Laurel Mountian State Park											
Laurel Ridge State Park					12						
Laurel Summit State Park											
Linn Run State Park											
Maurice K. Goddard State Park					12						
McConnells Mill State Park											
Moraine State Park					12			8			
Ohiopyle State Park				12	12						
Oil Creek State Park					12						
Point State Park											
Presque Isle State Park					12			12			
Pymatuning State Park					12		8				
Raccoon Creek State Park	12			12	12						
Ryerson Station State Park					12						
Yellow Creek State Park					12						

Months of the Year

	Food & Beverage						
Park Name	Concession	Dining/Mess Hall	Kitchen	Ski Club	Clubhouse	BBQ Pit	Restaurant
Forest District 4 Forbes							
Forest District 6 Gallitzin							
Forest District 8 Clear Creek							
Forest District 14 Cornplanter							
Clear Creek State Park							
Cook Forest State Park							
Jennings Environmental Education Center							
Keystone State Park							
Kooser State Park							
Laurel Hill State Park	4	5					
Laurel Mountian State Park							
Laurel Ridge State Park	4						
Laurel Summit State Park							
Linn Run State Park							
Maurice K. Goddard State Park							
McConnells Mill State Park							
Moraine State Park	5						
Ohiopyle State Park	8						
Oil Creek State Park							
Point State Park	3						
Presque Isle State Park	4.3						12
Pymatuning State Park							
Raccoon Creek State Park	4						
Ryerson Station State Park							
Yellow Creek State Park							

	Historical & Demonstration											
Park Name	Blacksmith Shop	Carpentry Shop	Sawmill	Mill	Sugar Shack	Rifle Range	Carriage House	Lighthouse	Mansion	Memorial	Wayside Exhibit	Museum
Forest District 4 Forbes												
Forest District 6 Gallitzin												
Forest District 8 Clear Creek												
Forest District 14 Cornplanter												
Clear Creek State Park												
Cook Forest State Park												9
Jennings Environmental Education Center												
Keystone State Park												
Kooser State Park												
Laurel Hill State Park					2							
Laurel Mountian State Park												
Laurel Ridge State Park												
Laurel Summit State Park												
Linn Run State Park												
Maurice K. Goddard State Park												
McConnells Mill State Park				6								
Moraine State Park												
Ohiopyle State Park												
Oil Creek State Park												
Point State Park												12
Presque Isle State Park								6		12		
Pymatuning State Park												
Raccoon Creek State Park												
Ryerson Station State Park												
Yellow Creek State Park												

Park Name	Replica Power Station	Railroad Station	Iron Furnace	Limestone Kiln	Observatory	Chapel	Church	Temple
Forest District 4 Forbes								
Forest District 6 Gallitzin								
Forest District 8 Clear Creek								
Forest District 14 Cornplanter								
Clear Creek State Park								
Cook Forest State Park								
Jennings Environmental Education Center								
Keystone State Park								
Kooser State Park								
Laurel Hill State Park								
Laurel Mountian State Park								
Laurel Ridge State Park								
Laurel Summit State Park								
Linn Run State Park								
Maurice K. Goddard State Park								
McConnells Mill State Park								
Moraine State Park	0.4							
Ohiopyle State Park								
Oil Creek State Park		4						
Point State Park								
Presque Isle State Park								
Pymatuning State Park								
Raccoon Creek State Park								
Ryerson Station State Park								
Yellow Creek State Park								

	Agrarian						
Park Name	Barn	Chicken Coop	Horse Barn	Stable	Nursery	Pigpen	Corn Crib
Forest District 4 Forbes							
Forest District 6 Gallitzin							
Forest District 8 Clear Creek							
Forest District 14 Cornplanter							
Clear Creek State Park							
Cook Forest State Park							
Jennings Environmental Education Center							
Keystone State Park							
Kooser State Park							
Laurel Hill State Park							
Laurel Mountian State Park							
Laurel Ridge State Park							
Laurel Summit State Park							
Linn Run State Park							
Maurice K. Goddard State Park							
McConnells Mill State Park							
Moraine State Park							
Ohiopyle State Park	12						
Oil Creek State Park							
Point State Park							
Presque Isle State Park							
Pymatuning State Park							
Raccoon Creek State Park							
Ryerson Station State Park							
Yellow Creek State Park							

Months of the Year

	Information & Safety										
Park Name	Contact Station	First Aid Station	Ranger Station	Infirmary	Information Center	Kiosk	Lifeguard Building	Registration Building	Gatehouse	Fire Tower	Observation Tower
Forest District 4 Forbes											
Forest District 6 Gallitzin											
Forest District 8 Clear Creek											
Forest District 14 Cornplanter										4	
Clear Creek State Park											
Cook Forest State Park	5									12	
Jennings Environmental Education Center											
Keystone State Park						12					
Kooser State Park											
Laurel Hill State Park	6	3									
Laurel Mountian State Park											
Laurel Ridge State Park											
Laurel Summit State Park											
Linn Run State Park											
Maurice K. Goddard State Park											
McConnells Mill State Park											
Moraine State Park		5									
Ohiopyle State Park	8.5		12								
Oil Creek State Park											
Point State Park											
Presque Isle State Park											
Pymatuning State Park	8		12				6		12		
Raccoon Creek State Park	4	4					4				
Ryerson Station State Park							3				
Yellow Creek State Park											

Months of the Year

	Education				Arts						
Park Name	Environmental Education Center	Environmental Learning Center	Nature Center	Visitor Center	Stage	Theater	Theater Ticket Booth	Gymnasium	Amphitheater	Auditorium	Playhouse
Forest District 4 Forbes											
Forest District 6 Gallitzin											
Forest District 8 Clear Creek											
Forest District 14 Cornplanter											
Clear Creek State Park			5						0.3		
Cook Forest State Park									0.2		
Jennings Environmental Education Center	12										
Keystone State Park				12							
Kooser State Park											
Laurel Hill State Park				5							
Laurel Mountian State Park											
Laurel Ridge State Park											
Laurel Summit State Park											
Linn Run State Park											
Maurice K. Goddard State Park					0.2						
McConnells Mill State Park											
Moraine State Park											
Ohiopyle State Park											
Oil Creek State Park											
Point State Park											
Presque Isle State Park			3	12		12					
Pymatuning State Park		8							8		
Raccoon Creek State Park	12								4		
Ryerson Station State Park				12					9		
Yellow Creek State Park	8										

	Shelters										
Park Name	Nature Shelter	State Route Area Shelter	Turnpike Area Shelter	Backpacking Shelter	Host Shelter	Picnic Shelter	Rain Shelter	Trail Shelter	Warming Hut	Pavilion	Gazebo
Forest District 4 Forbes									4		
Forest District 6 Gallitzin											
Forest District 8 Clear Creek											
Forest District 14 Cornplanter											
Clear Creek State Park						0.7					
Cook Forest State Park						5					
Jennings Environmental Education Center											
Keystone State Park										8	
Kooser State Park										8	
Laurel Hill State Park										8	
Laurel Mountian State Park											
Laurel Ridge State Park										8	
Laurel Summit State Park											
Linn Run State Park											
Maurice K. Goddard State Park						7					
McConnells Mill State Park											
Moraine State Park						7					
Ohiopyle State Park									4		
Oil Creek State Park										12	
Point State Park											
Presque Isle State Park						11				8.5	
Pymatuning State Park						8				8	
Raccoon Creek State Park				12							
Ryerson Station State Park										12	
Yellow Creek State Park											

	Recreation						
Park Name	Youth Center	Recreation Hall	Camp Fire Girls Building	Ski Building	Ski Lift Station	Bike Rental	Climbing Tower
Forest District 4 Forbes							
Forest District 6 Gallitzin							
Forest District 8 Clear Creek							
Forest District 14 Cornplanter							
Clear Creek State Park							
Cook Forest State Park							
Jennings Environmental Education Center							
Keystone State Park							
Kooser State Park							
Laurel Hill State Park							
Laurel Mountian State Park							
Laurel Ridge State Park							
Laurel Summit State Park							
Linn Run State Park							
Maurice K. Goddard State Park							
McConnells Mill State Park							
Moraine State Park						7	
Ohiopyle State Park							
Oil Creek State Park							
Point State Park							
Presque Isle State Park							
Pymatuning State Park							
Raccoon Creek State Park		12					
Ryerson Station State Park							
Yellow Creek State Park							

	Water Recreation											
Park Name	Pool	Pool Filter Building	Pool Ticket Booth	Aquatics Building	Beach	Pier	Fish Cleaning	Boat House	Boat Launch	Boat Rental	Marina	Wet Slip
Forest District 4 Forbes												
Forest District 6 Gallitzin												
Forest District 8 Clear Creek												
Forest District 14 Cornplanter												
Clear Creek State Park												
Cook Forest State Park												
Jennings Environmental Education Center												
Keystone State Park					4					4.5		
Kooser State Park												
Laurel Hill State Park										4		
Laurel Mountian State Park												
Laurel Ridge State Park												
Laurel Summit State Park												
Linn Run State Park												
Maurice K. Goddard State Park												
McConnells Mill State Park												
Moraine State Park										5		
Ohiopyle State Park												
Oil Creek State Park												
Point State Park												
Presque Isle State Park				12		6				5		6
Pymatuning State Park					6	6	8		8	8	8	8
Raccoon Creek State Park					4			8	8	8		8
Ryerson Station State Park	3	3										
Yellow Creek State Park										4		

Months of the Year

					Fuel						
Park Name	Dry Slip	Oar House	Houseboat Mooring	Offshore Mooring	Gas House	Gas Pump Building	Gas Shed	Oil Shed	Oil	Natural Gas	Propane
Forest District 4 Forbes											
Forest District 6 Gallitzin											
Forest District 8 Clear Creek											
Forest District 14 Cornplanter											
Clear Creek State Park								12			12
Cook Forest State Park								12		12	
Jennings Environmental Education Center									12		12
Keystone State Park											
Kooser State Park											
Laurel Hill State Park											
Laurel Mountian State Park											
Laurel Ridge State Park											
Laurel Summit State Park											
Linn Run State Park											
Maurice K. Goddard State Park											
McConnells Mill State Park											
Moraine State Park						12					
Ohiopyle State Park											
Oil Creek State Park											
Point State Park											
Presque Isle State Park					12	12	12			12	
Pymatuning State Park				8							12
Raccoon Creek State Park	8						12				12
Ryerson Station State Park								12			12
Yellow Creek State Park											

Months of the Year

	Power						Communications		
Park Name	Powerhouse	Generator Building	Electric	Wind Turbine	Solar	Hydroelectric	Radio Shack	Radio Tower	Telecom
Forest District 4 Forbes									
Forest District 6 Gallitzin									
Forest District 8 Clear Creek									
Forest District 14 Cornplanter									
Clear Creek State Park			12						12
Cook Forest State Park			12					12	12
Jennings Environmental Education Center			12						
Keystone State Park									
Kooser State Park		12							
Laurel Hill State Park		12							
Laurel Mountian State Park									
Laurel Ridge State Park									
Laurel Summit State Park									
Linn Run State Park									
Maurice K. Goddard State Park									12
McConnells Mill State Park									
Moraine State Park									
Ohiopyle State Park								12	
Oil Creek State Park									
Point State Park									
Presque Isle State Park					12		12	12	
Pymatuning State Park				12				12	
Raccoon Creek State Park									
Ryerson Station State Park								12	
Yellow Creek State Park				12	12				

Months of the Year

	Water Supply & Control				Water Distribution					
Park Name	Gauge Station	Dam	Dam Control Tower	Weir	Pressure Station	Valve House	Water Distribution System	Potable Water	Pump House	Well House
Forest District 4 Forbes										
Forest District 6 Gallitzin										
Forest District 8 Clear Creek										
Forest District 14 Cornplanter										
Clear Creek State Park		12			12		12	12	12	12
Cook Forest State Park	12	9			12	12	12	12	12	12
Jennings Environmental Education Center								12		
Keystone State Park										
Kooser State Park										12
Laurel Hill State Park										12
Laurel Mountian State Park										
Laurel Ridge State Park							12			
Laurel Summit State Park										
Linn Run State Park										
Maurice K. Goddard State Park										12
McConnells Mill State Park										7
Moraine State Park										
Ohiopyle State Park							12		12	12
Oil Creek State Park										
Point State Park									8	
Presque Isle State Park										
Pymatuning State Park	12	12	12	12			12	12		12
Raccoon Creek State Park		12		12						
Ryerson Station State Park										
Yellow Creek State Park							8			

Months of the Year

	Potable Water				Potable Water Treatment			
Park Name	Tank Shed	Buried Storage Reservoir	Elevated Storage Reservoir	Free Water Surface Storage Reservoir	Chlorine Station	Water Treatment Building	Water Treatment Plant – Groundwater Source	Water Treatment Plant – Surface Water Source
Forest District 4 Forbes								
Forest District 6 Gallitzin								
Forest District 8 Clear Creek								
Forest District 14 Cornplanter								
Clear Creek State Park			9		12	12	12	
Cook Forest State Park	9		9		12	12	12	
Jennings Environmental Education Center								
Keystone State Park								
Kooser State Park						12		
Laurel Hill State Park						12		
Laurel Mountian State Park								
Laurel Ridge State Park					12			
Laurel Summit State Park								
Linn Run State Park								
Maurice K. Goddard State Park								
McConnells Mill State Park								
Moraine State Park								12
Ohiopyle State Park								
Oil Creek State Park						12		
Point State Park								
Presque Isle State Park								
Pymatuning State Park	12		12		12	12		
Raccoon Creek State Park			12		12	12		
Ryerson Station State Park								
Yellow Creek State Park								

Months of the Year

	Wastewater Treatment									
Park Name	Pump Station	Gravity Sewage Collection	Pressure Sewage Conveyance	Aeration/ Control Building	Wastewater Treatment Plant – Activated Sludge	Wastewater Treatment Plant – Lagoon	Wastewater	On-lot Septic – Conventional	On-lot Septic – Alternative	On-lot Septic – Experimental
Forest District 4 Forbes										
Forest District 6 Gallitzin										
Forest District 8 Clear Creek										
Forest District 14 Cornplanter										
Clear Creek State Park		12							12	12
Cook Forest State Park	12	12	12	12	12		12	12	12	
Jennings Environmental Education Center	12								12	
Keystone State Park	12				12					
Kooser State Park	12	12								
Laurel Hill State Park										
Laurel Mountian State Park										
Laurel Ridge State Park		12								
Laurel Summit State Park										
Linn Run State Park										
Maurice K. Goddard State Park	12									
McConnells Mill State Park										
Moraine State Park					12					
Ohiopyle State Park										
Oil Creek State Park										
Point State Park										
Presque Isle State Park	12							12		
Pymatuning State Park	12									
Raccoon Creek State Park	12			12	12			12		
Ryerson Station State Park					12					
Yellow Creek State Park										

	Other					
Park Name	Lease	Military Building	PennDOT Building	QR Multi-Use Building	Bridges	Other
Forest District 4 Forbes						12
Forest District 6 Gallitzin						
Forest District 8 Clear Creek						
Forest District 14 Cornplanter						12
Clear Creek State Park					12	
Cook Forest State Park					12	
Jennings Environmental Education Center						
Keystone State Park						
Kooser State Park						
Laurel Hill State Park	12					
Laurel Mountian State Park						
Laurel Ridge State Park	12					
Laurel Summit State Park						
Linn Run State Park						
Maurice K. Goddard State Park						
McConnells Mill State Park						
Moraine State Park						
Ohiopyle State Park						
Oil Creek State Park						
Point State Park						8
Presque Isle State Park						
Pymatuning State Park	12					
Raccoon Creek State Park					12	
Ryerson Station State Park					12	
Yellow Creek State Park						5

Hours of Operation

	Administrative							
Park Name	Administration Building	Office	Park Office	Forest District Office	Ranger Office	Marina Office	Resource Mgmt. Center	Control Comm. Center
Forest District 4 Forbes	8							
Forest District 6 Gallitzin				10	6			
Forest District 8 Clear Creek				9				
Forest District 14 Cornplanter		8		8				
Clear Creek State Park			8					
Cook Forest State Park	9		9		9			
Jennings Environmental Education Center		8.5						
Keystone State Park			8.5					
Kooser State Park			8					
Laurel Hill State Park			8					
Laurel Mountian State Park								
Laurel Ridge State Park								
Laurel Summit State Park								
Linn Run State Park								
Maurice K. Goddard State Park			8.5		8	14		
McConnells Mill State Park								
Moraine State Park			12.5			8		
Ohiopyle State Park			10		15			
Oil Creek State Park			14					
Point State Park	10							
Presque Isle State Park			8		24	11		
Pymatuning State Park			10		20			
Raccoon Creek State Park			12		12			
Ryerson Station State Park			8					
Yellow Creek State Park			8					

* measured in hours per day

Hours of Operation

	Maintenance & Storage											
Park Name	Maintenance	Repair Garage	Garage	Cold Storage	Ice House	Hazardous Storage	Lumber Shed	Rescue Equipment Storage	Salt Storage	Shed	Vehicle Storage	Warehouse
Forest District 4 Forbes	8									8		
Forest District 6 Gallitzin	8	8				8				8		
Forest District 8 Clear Creek		9	9									
Forest District 14 Cornplanter	8	8	8									
Clear Creek State Park	8		8	8		8						
Cook Forest State Park	8		8			8	8			8		
Jennings Environmental Education Center	8						8					
Keystone State Park	8											
Kooser State Park												
Laurel Hill State Park	8	8										
Laurel Mountian State Park												
Laurel Ridge State Park	8											
Laurel Summit State Park												
Linn Run State Park												
Maurice K. Goddard State Park	9						9			9	9	
McConnells Mill State Park	8											
Moraine State Park	8		8									24
Ohiopyle State Park	8											
Oil Creek State Park	9		9									
Point State Park	14	14										
Presque Isle State Park	9	8					9			9		9
Pymatuning State Park	8	8	8	8						8	8	8
Raccoon Creek State Park	24	24	24			24	24					24
Ryerson Station State Park	8		8									
Yellow Creek State Park	8											

Hours of Operation

						Bath, Toilet & Changing				
Park Name	Camper Storage Space	Ski Storage	Snowmobile Storage	Trailer	Sign Shop	Restroom	Bath/Shower/ Wash House	Changing/ Dressing Room	Comfort Station	Dressing Stockade
Forest District 4 Forbes										
Forest District 6 Gallitzin										
Forest District 8 Clear Creek										
Forest District 14 Cornplanter										
Clear Creek State Park						24	24		24	
Cook Forest State Park					8	24	24		24	
Jennings Environmental Education Center						10				
Keystone State Park						24	24	12		
Kooser State Park						24	24			
Laurel Hill State Park						24	24		24	
Laurel Mountian State Park										
Laurel Ridge State Park						24				
Laurel Summit State Park										
Linn Run State Park										
Maurice K. Goddard State Park					9	24				
McConnells Mill State Park									24	
Moraine State Park									24	
Ohiopyle State Park						24	24	9	24	
Oil Creek State Park										
Point State Park						13				
Presque Isle State Park					9	14	24			
Pymatuning State Park					8	24	12	12	24	12
Raccoon Creek State Park					24		12	12		
Ryerson Station State Park						24	10			
Yellow Creek State Park							24			

Hours of Operation

	Overnight										
Park Name	Cabin – Modern	Cabin – Rustic	Cottage	Camping Cottage	Inn	Chalet	Lodge	Hostel	Quonset Building	Yurt	YMCA Camp
Forest District 4 Forbes		8									
Forest District 6 Gallitzin											
Forest District 8 Clear Creek											
Forest District 14 Cornplanter											
Clear Creek State Park		24			24					24	
Cook Forest State Park		24			8.5						
Jennings Environmental Education Center											
Keystone State Park	24			24						24	
Kooser State Park	24	24									
Laurel Hill State Park				24			24				
Laurel Mountian State Park											
Laurel Ridge State Park											
Laurel Summit State Park											
Linn Run State Park											
Maurice K. Goddard State Park											
McConnells Mill State Park											
Moraine State Park	24										
Ohiopyle State Park				24						24	
Oil Creek State Park											
Point State Park											
Presque Isle State Park											
Pymatuning State Park	24										
Raccoon Creek State Park	24	24					24				
Ryerson Station State Park				24							
Yellow Creek State Park				24						24	

Hours of Operation

	Dwelling						Retail				
Park Name	Apartment	Barracks	Dormitory	Housing	Residence	Staff Quarters	Camp Store	Gift Shop	Rod & Gun Club	Golf Pro Shop	Trading Post
Forest District 4 Forbes											
Forest District 6 Gallitzin											
Forest District 8 Clear Creek											
Forest District 14 Cornplanter											
Clear Creek State Park					24						
Cook Forest State Park											
Jennings Environmental Education Center											
Keystone State Park					24						
Kooser State Park					24						
Laurel Hill State Park		24			24			6			
Laurel Mountian State Park											
Laurel Ridge State Park					24						
Laurel Summit State Park											
Linn Run State Park											
Maurice K. Goddard State Park					24						
McConnells Mill State Park											
Moraine State Park					24			9			
Ohiopyle State Park				24	24						
Oil Creek State Park					24						
Point State Park											
Presque Isle State Park					24			7			
Pymatuning State Park					24		12				
Raccoon Creek State Park	24			24	24						
Ryerson Station State Park					24						
Yellow Creek State Park					24						

Hours of Operation

	Food & Beverage											
Park Name	Concession	Dining/Mess Hall	Kitchen	Ski Club	Clubhouse	BBQ Pit	Restaurant	Blacksmith Shop	Carpentry Shop	Sawmill	Mill	Sugar Shack
Forest District 4 Forbes												
Forest District 6 Gallitzin												
Forest District 8 Clear Creek												
Forest District 14 Cornplanter												
Clear Creek State Park												
Cook Forest State Park												
Jennings Environmental Education Center												
Keystone State Park												
Kooser State Park												
Laurel Hill State Park	7	12										24
Laurel Mountian State Park												
Laurel Ridge State Park	8											
Laurel Summit State Park												
Linn Run State Park												
Maurice K. Goddard State Park												
McConnells Mill State Park											6	
Moraine State Park	8											
Ohiopyle State Park	9											
Oil Creek State Park												
Point State Park	7											
Presque Isle State Park	7.25						5					
Pymatuning State Park												
Raccoon Creek State Park	12											
Ryerson Station State Park												
Yellow Creek State Park												

Historical & Demonstration												
Park Name	Rifle Range	Carriage House	Lighthouse	Mansion	Memorial	Wayside Exhibit	Museum	Replica Power Station	Railroad Station	Iron Furnace	Limestone Kiln	Observatory
Forest District 4 Forbes												
Forest District 6 Gallitzin												
Forest District 8 Clear Creek												
Forest District 14 Cornplanter												
Clear Creek State Park												
Cook Forest State Park							12					
Jennings Environmental Education Center												
Keystone State Park												
Kooser State Park												
Laurel Hill State Park												
Laurel Mountian State Park												
Laurel Ridge State Park												
Laurel Summit State Park												
Linn Run State Park												
Maurice K. Goddard State Park												
McConnells Mill State Park												
Moraine State Park								24				
Ohiopyle State Park												
Oil Creek State Park									7			
Point State Park							9					
Presque Isle State Park			7		10							
Pymatuning State Park												
Raccoon Creek State Park												
Ryerson Station State Park												
Yellow Creek State Park												

Hours of Operation

				Agrarian						
Park Name	Chapel	Church	Temple	Barn	Chicken Coop	Horse Barn	Stable	Nursery	Pigpen	Corn Crib
Forest District 4 Forbes										
Forest District 6 Gallitzin										
Forest District 8 Clear Creek										
Forest District 14 Cornplanter										
Clear Creek State Park										
Cook Forest State Park										
Jennings Environmental Education Center										
Keystone State Park										
Kooser State Park										
Laurel Hill State Park										
Laurel Mountian State Park										
Laurel Ridge State Park										
Laurel Summit State Park										
Linn Run State Park										
Maurice K. Goddard State Park										
McConnells Mill State Park										
Moraine State Park										
Ohiopyle State Park				24						
Oil Creek State Park										
Point State Park										
Presque Isle State Park										
Pymatuning State Park										
Raccoon Creek State Park										
Ryerson Station State Park										
Yellow Creek State Park										

Hours of Operation

	Information & Safety										
Park Name	Contact Station	First Aid Station	Ranger Station	Infirmary	Information Center	Kiosk	Lifeguard Building	Registration Building	Gatehouse	Fire Tower	Observation Tower
Forest District 4 Forbes											
Forest District 6 Gallitzin											
Forest District 8 Clear Creek											
Forest District 14 Cornplanter										8	
Clear Creek State Park											
Cook Forest State Park	5									14	
Jennings Environmental Education Center											
Keystone State Park						24					
Kooser State Park											
Laurel Hill State Park	7	8									
Laurel Mountian State Park											
Laurel Ridge State Park											
Laurel Summit State Park											
Linn Run State Park											
Maurice K. Goddard State Park											
McConnells Mill State Park											
Moraine State Park		8									
Ohiopyle State Park	24		15								
Oil Creek State Park											
Point State Park											
Presque Isle State Park											
Pymatuning State Park	14		20				12		24		
Raccoon Creek State Park	24	24					12				
Ryerson Station State Park							8				
Yellow Creek State Park											

Hours of Operation

	Education				Arts						
Park Name	Environmental Education Center	Environmental Learning Center	Nature Center	Visitor Center	Stage	Theater	Theater Ticket Booth	Gym	Amphitheater	Auditorium	Playhouse
Forest District 4 Forbes											
Forest District 6 Gallitzin											
Forest District 8 Clear Creek											
Forest District 14 Cornplanter											
Clear Creek State Park			14						2		
Cook Forest State Park									2		
Jennings Environmental Education Center	8.5										
Keystone State Park				8							
Kooser State Park											
Laurel Hill State Park				6							
Laurel Mountian State Park											
Laurel Ridge State Park											
Laurel Summit State Park											
Linn Run State Park											
Maurice K. Goddard State Park					24						
McConnells Mill State Park											
Moraine State Park											
Ohiopyle State Park											
Oil Creek State Park											
Point State Park											
Presque Isle State Park			8	8		8					
Pymatuning State Park		12							12		
Raccoon Creek State Park	12								12		
Ryerson Station State Park				8					8		
Yellow Creek State Park	24										

Hours of Operation

	Shelters										
Park Name	Nature Shelter	State Route Area Shelter	Turnpike Area Shelter	Backpacking Shelter	Host Shelter	Picnic Shelter	Rain Shelter	Trail Shelter	Warming Hut	Pavilion	Gazebo
Forest District 4 Forbes									24		
Forest District 6 Gallitzin											
Forest District 8 Clear Creek											
Forest District 14 Cornplanter											
Clear Creek State Park						5					
Cook Forest State Park						5					
Jennings Environmental Education Center											
Keystone State Park										24	
Kooser State Park										12	
Laurel Hill State Park										12	
Laurel Mountian State Park											
Laurel Ridge State Park										12	
Laurel Summit State Park											
Linn Run State Park											
Maurice K. Goddard State Park						14					
McConnells Mill State Park											
Moraine State Park						24					
Ohiopyle State Park									10		
Oil Creek State Park										24	
Point State Park											
Presque Isle State Park						12				12	
Pymatuning State Park						12				12	
Raccoon Creek State Park				24							
Ryerson Station State Park										8	
Yellow Creek State Park											

Hours of Operation

	Recreation											
Park Name	Youth Center	Recreation Hall	Camp Fire Girls Building	Ski Building	Ski Lift Station	Bike Rental	Climbing Tower	Pool	Pool Filter Building	Pool Ticket Booth	Aquatics Building	Beach
Forest District 4 Forbes												
Forest District 6 Gallitzin												
Forest District 8 Clear Creek												
Forest District 14 Cornplanter												
Clear Creek State Park												
Cook Forest State Park												
Jennings Environmental Education Center												
Keystone State Park												12
Kooser State Park												
Laurel Hill State Park												
Laurel Mountian State Park												
Laurel Ridge State Park												
Laurel Summit State Park												
Linn Run State Park												
Maurice K. Goddard State Park												
McConnells Mill State Park												
Moraine State Park						10						
Ohiopyle State Park												
Oil Creek State Park												
Point State Park												
Presque Isle State Park											24	
Pymatuning State Park												12
Raccoon Creek State Park		24										12
Ryerson Station State Park								8	8			
Yellow Creek State Park												

Hours of Operation

	Water & Recreation										
Park Name	Pier	Fish Cleaning	Boat House	Boat Launch	Boat Rental	Marina	Wet Slip	Dry Slip	Oar House	Houseboat Mooring	Offshore Mooring
Forest District 4 Forbes											
Forest District 6 Gallitzin											
Forest District 8 Clear Creek											
Forest District 14 Cornplanter											
Clear Creek State Park											
Cook Forest State Park											
Jennings Environmental Education Center											
Keystone State Park					8						
Kooser State Park											
Laurel Hill State Park					8						
Laurel Mountian State Park											
Laurel Ridge State Park											
Laurel Summit State Park											
Linn Run State Park											
Maurice K. Goddard State Park											
McConnells Mill State Park											
Moraine State Park					10						
Ohiopyle State Park											
Oil Creek State Park											
Point State Park											
Presque Isle State Park	10				12		24				
Pymatuning State Park	12	12		12	12	24	24				24
Raccoon Creek State Park			12	12	12		12	12			
Ryerson Station State Park											
Yellow Creek State Park					9						

Hours of Operation

	Fuel							Power					
Park Name	Gas House	Gas Pump Building	Gas Shed	Oil Shed	Oil	Natural Gas	Propane	Powerhouse	Generator Building	Electric	Wind Turbine	Solar	Hydro-electric
Forest District 4 Forbes													
Forest District 6 Gallitzin													
Forest District 8 Clear Creek													
Forest District 14 Cornplanter													
Clear Creek State Park				8			24			24			
Cook Forest State Park				8		24				24			
Jennings Environmental Education Center					8.5		8			8.5			
Keystone State Park													
Kooser State Park									as needed				
Laurel Hill State Park									as needed				
Laurel Mountian State Park													
Laurel Ridge State Park													
Laurel Summit State Park													
Linn Run State Park													
Maurice K. Goddard State Park													
McConnells Mill State Park													
Moraine State Park		24											
Ohiopyle State Park													
Oil Creek State Park													
Point State Park													
Presque Isle State Park	24	24	24			24						24	
Pymatuning State Park							24				24		
Raccoon Creek State Park			24				24						
Ryerson Station State Park				24			24						
Yellow Creek State Park											24	24	

Hours of Operation

	Communications			Water Supply & Control				Water Distribution					
Park Name	Radio Shack	Radio Tower	Telecom	Gauge Station	Dam	Dam Control Tower	Weir	Pressure Station	Valve House	Water Distribution System	Potable Water	Pump House	Well House
Forest District 4 Forbes													
Forest District 6 Gallitzin													
Forest District 8 Clear Creek													
Forest District 14 Cornplanter													
Clear Creek State Park			24		24			24		24	24	24	24
Cook Forest State Park		24	24	24	24			24	24	24	24	24	24
Jennings Environmental Education Center											8.5		
Keystone State Park													
Kooser State Park													24
Laurel Hill State Park													24
Laurel Mountian State Park													
Laurel Ridge State Park										24			
Laurel Summit State Park													
Linn Run State Park													
Maurice K. Goddard State Park			24										24
McConnells Mill State Park													3
Moraine State Park													
Ohiopyle State Park		24								24		6	24
Oil Creek State Park													
Point State Park												16	
Presque Isle State Park	24	24											
Pymatuning State Park		24		24	24	24	24			24	24		24
Raccoon Creek State Park					24		24						
Ryerson Station State Park		24											
Yellow Creek State Park										24			

Hours of Operation

	Potable Water				Potable Water Treatment			
Park Name	Tank Shed	Buried Storage Reservoir	Elevated Storage Reservoir	Free Water Surface Storage Reservoir	Chlorine Station	Water Treatment Building	Water Treatment Plant – Groundwater Source	Water Treatment Plant – Surface Water Source
Forest District 4 Forbes								
Forest District 6 Gallitzin								
Forest District 8 Clear Creek								
Forest District 14 Cornplanter								
Clear Creek State Park			24		24	24	24	
Cook Forest State Park	24		24		24	24	24	
Jennings Environmental Education Center								
Keystone State Park								
Kooser State Park						24		
Laurel Hill State Park						24		
Laurel Mountian State Park								
Laurel Ridge State Park					24			
Laurel Summit State Park								
Linn Run State Park								
Maurice K. Goddard State Park								
McConnells Mill State Park								
Moraine State Park								24
Ohiopyle State Park								
Oil Creek State Park						24		
Point State Park								
Presque Isle State Park								
Pymatuning State Park	24		24		24	24		
Raccoon Creek State Park			24		24	24		
Ryerson Station State Park								
Yellow Creek State Park								

Hours of Operation

	Wastewater Treatment									
Park Name	Pump Station	Gravity Sewage Collection	Pressure Sewage Conveyance	Aeration/Control Building	Wastewater Treatment Plant – Activated Sludge	Wastewater Treatment Plant – Lagoon	Wastewater	On-lot Septic – Conventional	On-lot Septic – Alternative	On-lot Septic – Experimental
Forest District 4 Forbes										
Forest District 6 Gallitzin										
Forest District 8 Clear Creek										
Forest District 14 Cornplanter										
Clear Creek State Park		24							24	24
Cook Forest State Park	24	24	24	24	24		24	24	24	
Jennings Environmental Education Center	24								24	
Keystone State Park	24				24					
Kooser State Park	24	24								
Laurel Hill State Park										
Laurel Mountian State Park										
Laurel Ridge State Park		24								
Laurel Summit State Park										
Linn Run State Park										
Maurice K. Goddard State Park	24									
McConnells Mill State Park										
Moraine State Park					24					
Ohiopyle State Park										
Oil Creek State Park										
Point State Park										
Presque Isle State Park	24							24		
Pymatuning State Park	24									
Raccoon Creek State Park	24			24	24			24		
Ryerson Station State Park					24					
Yellow Creek State Park										

Hours of Operation

	Other					
Park Name	Lease	Military Building	PennDOT Building	QR Multi-Use Building	Bridges	Other
Forest District 4 Forbes						8
Forest District 6 Gallitzin						
Forest District 8 Clear Creek						
Forest District 14 Cornplanter						24
Clear Creek State Park					24	
Cook Forest State Park					14	
Jennings Environmental Education Center						
Keystone State Park						
Kooser State Park						
Laurel Hill State Park	24					
Laurel Mountian State Park						
Laurel Ridge State Park	24					
Laurel Summit State Park						
Linn Run State Park						
Maurice K. Goddard State Park						
McConnells Mill State Park						
Moraine State Park						
Ohiopyle State Park						
Oil Creek State Park						
Point State Park						16
Presque Isle State Park						
Pymatuning State Park	24					
Raccoon Creek State Park					24	
Ryerson Station State Park					24	
Yellow Creek State Park						24

	Electrical Power Co#1	$ rate	Electrical Power Co#2	$ rate	Electric Power Co. #3	$rate	Electric Power Co. #4	$rate	Electric Power Co. #5	$ Rate	Co-op Y/N		Natural Gas Company	NG Rate $	Heating Oil Co	HO Rate $	Water Co #1	rate $	Sewer Co	rate $	Notes
Clear Creek State Pa	United Electric Coop Inc	$0.15/kwh									Y				Glassmere	2.1319/gal					
Cook Forest State Pa	Pennsylvania Elec Co.	$0.16/kwh	United Electric Coop Inc.	$0.16/kwh	West Penn Power Co.						Y	Partially	Knox Energy	$0.71							
Jennings Env Ed Cen	West Penn Power Co.	$0.05.75/Kwh									N				Melzer's Fuel Service	$1.73/gal					
Keystone State Park	West Penn Power Co.	$0.0799/kwh									N				Glassmere	$1.73/gal	Municipal Authority of Westmoreland County	6" meter - $1283.20/quarterly min. // $427.73/monthly min. per 1000gal (next 237k gallons $7.49/1000gal)			.0799/KWH
Kooser State Park	Pennsylvania Elec. Co.										N										
Laurel Hill St Pk Co	Somerset Rural Elec. Co.										Y	Includes Laurel Ridge									
Linn Run St Pk Com	Pennsylvania Elec. Co.	bill sent to Harrisburg, unsure of rate	West Penn Power Co.	bill sent to Harrisburg, unsure of rate							N	Includes Laurel Summit	N/A	N/A			N/A	N/A	N/A	N/A	Multiple water wells, sewage tanks pumped as needed
Maurice K. Goddard S	Constellation Newenergy Inc		Pennsylvania Elec. Co.		Pennsylvania Power Co.	0.09957					N						Sandy Lake Borough	$35.00/month	Sandy Lake Borough	$30/month + anything over 3333 gallons/month = $5/1000 gallons	
McConnell's Mill St	Pennsylvania Power Co.	bill sent to Harrisburg, unsure of rate									N				Glassmere	1.73/gal					
Moraine St Pk Com	Central Elec. Coop. Inc.	0.135/Kwh	Talen Energy Marketing LLC	?	West Penn Power Co.	0.772/Kwh	Constellation New Energy	0.575/Kwh			Y	Partially	N/A		Glassmere	1.73/gal	Park Operated		Park Operated		
Ohiopyle State Park	Constellation Newenergy Inc.	.0575/KWH	First Energy Solution Corp	.0799/KWH?	Somerset Rural Elec. Co.	.01034/KWH	WGL	.06570/KWH	West Penn Power Co.	.06570/KWH	Y	One account only. Rest of park is West Penn Power.			Export Fuel	1.8239/gal	National Pike Water Authority * Indian Creek Valley Water Authority	2" meter - $155.25- 1st 10,000 gal - $5.75 per 1,000 gal next 10,000, $4.60 per 1,000 next 10,000, $3.86 per 1,000 next 10,000 gal * Ind Creek - water flat rate - $12-$96 - 5/8" to 2" meter	Indian Creek Valley Water Authority	5/8" - 2" meter - $45 - $600 flat fee	
Oil Creek State Park	Pennsylvania Elec. Co.			.0772/KWH							N		National Fuel	0.38911/ ccf							
Park Region #2 Office											N										
Point State Park	Talen Energy Marketing	$0.0657/KWH	Duquense Light	$.0662/KWH (PTC $.0635)							N		Peoples Natural Gas	$6.39/M CF (PTC $2.9889)							
Presque Isle State Pk	Pennsylvania Elec. Co.	.0669/KWH	Northwestern Rural Elec.	?							N		Open Flow	0.2547/c cf	Provanta (propane)	0.8998	Erie Water Works	3.62/ccf	Erie Water Works	2.52/ccf	
Pymatuning St Pk			Pennsylvania Power Co.	0.07084	Pennsylvania Elec. Co.	0.06339	Northwestern Rural Elec.	0.05193			Y	Partially			Melzer's Fuel Svc.	1.50/gal	Linesville Municipal Authority	0.0021	Linesville Pine Joint Municipal Authority/North & South Shenango Joint Municipal Authority	$4,000/mo during summer months/11.33% of operations & Maintenance (sewage agreement)	
Raccoon Creek St Pk	Constellation Newenergy Inc		Duquense Light								N										
Ryerson Station St P	West Penn Power Co.	$0.0571/KWH	N/A	N/A	N/A	N/A	N/A	N/A	N/A	N/A	N		N/A	N/A	N/A	N/A	Southwest PA Water Authority	Base Public - 2" = $120.00 / $.0047 per gallon	N/A	N/A	
Yellow Creek St Pk	REA Energy Coop.	$0.061/kWh									Y				Glassmere	$1.73/gal					

FORESTRY																					
FD 4 - Forbes	West Penn Power Co.	Bill goes to Harrisburg for payment.	Pennsylvania Elec Co	Bill goes to Harrisburg for payment.	Somerset Rural Elec. Co.	$0.103 per kwh up to 350 kwh / $0.086 per kwh over 350 kwh	NA	NA	NA	NA	Y	Somerset Rural Electric is a cooperative.	Peoples Natural Gas	$5.99 per MCF	Luther P. Miller	$1.75	Municipal Authority of Westmoreland	$.027 per Gallon	NA	NA	
FD 6 - Gallitzin	West Penn Power Co.	N/A	Pennsylvania Elec Co	invoices go to Harrisburg	Somerset Rural Elec. Co.	10.3 up to 350 KWH/ 8.6 after 350 KWH	REA Energy Coop	N/A			Y	Partially	Peoples Natural Gas	2.9887 MCF	Glassmere Fuel	1.1979/gallon	Borough of Ebensburg	47.00/5,000 gallons; 6.15/for every 1,000 +	Borough of Ebensburg	97.50/5,000 gallons; 8.75 for every 1,000 +	Borough of Ebensburg Stormwater 16.00/impermeable footage
FD 8 - Clear Creek	West Penn Power Co.	$432/mo.	United Elec. Coop. Inc.	$94/mo.									National Fuel	$102/mo.			PAWC	$69/mo.			
FD 14 - Cornplanter	Northwest Rural Elec.		Pennsylvania Elec Co	Pd by Hbg	Warren Elec. Coop. Inc	0.109							National Fuel	0.402353			Service Supplied by Warren State Hospital		Service Supplied by Warren State Hospital		

DATE OF ISSUE: JANUARY 23, 2017

DEPARTMENT OF GENERAL SERVICES
ENERGY AND RESOURCE MANAGEMENT OFFICE
401 NORTH STREET
HARRISBURG, PENNSYLVANIA

BULLETIN NO. 4
on

Project No. Small GESA-4 – REQUEST FOR PROPOSALS FOR A GUARANTEED ENERGY SAVINGS PROJECT AT: DEPT. OF CONSERVATION AND NATURAL RESOURCES, PARKS AND FOREST, WESTERN PENNSYLVANIA, Department of General Services, Energy & Resource Management, 401 North Street, Room 403, Harrisburg, Pennsylvania, 17120.

PROPOSAL SUBMISSION DEADLINE, FRIDAY FEBRUARY 10, 2017
TIME OF OPENING: 11:00 AM

REQUEST FOR INFORMATION

1. Please clarify whether or not the Forest District Regional Office located at 158 South Second Street, Clarion, PA 16214 is included in this RFP.

   Answer: Yes; although Clear Creek State Park and Clear Creek State Forest (FD #8) are separate entities, they are both included in this RFP. Please refer to pages 375 & 376 of the RFP for a complete list of sites included in the RFP. Also, please note that the correct address for the Clear Creek State Forest District Office (FD#8) is: 158 South Second *Avenue*, Clarion, PA 16214-1904.

R. Tomlinson
_____
Rebecca Tomlinson, RFP Coordinator
ENERGY & RESOURCE MANAGEMENT OFFICE

PLEASE ACKNOWLEDGE RECEIPT OF BULLETIN WITHIN 24 HOURS BY EMAIL RESPONSE TO REBECCA TOMLINSON AT retomlinso@pa.gov

NAME TITLE DATE

FIRM

DATE OF ISSUE: JANUARY 24, 2017

DEPARTMENT OF GENERAL SERVICES
ENERGY AND RESOURCE MANAGEMENT OFFICE
401 NORTH STREET
HARRISBURG, PENNSYLVANIA

BULLETIN NO. 5
on

Project No. Small GESA-4 – REQUEST FOR PROPOSALS FOR A GUARANTEED ENERGY SAVINGS PROJECT AT: DEPT. OF CONSERVATION AND NATURAL RESOURCES, PARKS AND FOREST, WESTERN PENNSYLVANIA, Department of General Services, Energy & Resource Management, 401 North Street, Room 403, Harrisburg, Pennsylvania, 17120.

PROPOSAL SUBMISSION DEADLINE, FRIDAY MARCH 10, 2017
TIME OF OPENING: 11:00 AM

QUESTIONS

1. Would it be possible to extend the PA Small GESA 4 DCNR due date by two weeks?

Answer: Yes; DGS will extend the proposal deadline by 4 weeks making the new due date Friday, March 10, 2017. Please see page 2 of this bulletin for the amended calendar of events.

R. Tomlinson

_____
Rebecca Tomlinson, RFP Coordinator
ENERGY & RESOURCE MANAGEMENT OFFICE

PLEASE ACKNOWLEDGE RECEIPT OF BULLETIN WITHIN 24 HOURS BY EMAIL RESPONSE TO REBECCA TOMLINSON AT retomlinso@pa.gov

NAME TITLE DATE

FIRM

1.36 Calendar of Events:

Activity	Date
Notice to Proposers and RFP Issued	December 1, 2016
Pre-Proposal Conference	*11:00 AM on December 13, 2016*
Proposers' Deadline to Submit Questions	*February 22, 2017*
DGS' Deadline to Issue Bulletins	*March 1, 2017*
Proposal Submission Deadline Rebecca Tomlinson Issuing Officer 403 North Office Building 401 North Street Harrisburg, PA 17120	*By 11:00 a.m. on March 10, 2017*
Anticipated Date for Interviews with Proposers who received sufficient Technical Submission points	*March 23 & 24, 2017*
Anticipated Date for Announcement of Successful Proposer	*March 31, 2017*

DATE OF ISSUE: FEBRUARY 7, 2017

DEPARTMENT OF GENERAL SERVICES
ENERGY AND RESOURCE MANAGEMENT OFFICE
401 NORTH STREET
HARRISBURG, PENNSYLVANIA

BULLETIN NO. 6
on

Project No. Small GESA-4 – REQUEST FOR PROPOSALS FOR A GUARANTEED ENERGY SAVINGS PROJECT AT: DEPT. OF CONSERVATION AND NATURAL RESOURCES, PARKS AND FOREST, WESTERN PENNSYLVANIA, Department of General Services, Energy & Resource Management, 401 North Street, Room 403, Harrisburg, Pennsylvania, 17120.

PROPOSAL SUBMISSION DEADLINE, FRIDAY MARCH 10, 2017
TIME OF OPENING: 11:00 AM

REQUEST FOR INFORMATION

1. Please provide the utility rates and consumption for electric, natural gas, oil, and propane for all the DCNR facilities.

   Answer: The Funding Agency has provided the attachments at the end of this bulletin. The Funding Agency is currently gathering utility invoices to provide via a future bulletin.

_____
Rebecca Tomlinson, RFP Coordinator
ENERGY & RESOURCE MANAGEMENT OFFICE

PLEASE ACKNOWLEDGE RECEIPT OF BULLETIN WITHIN 24 HOURS BY EMAIL RESPONSE TO REBECCA TOMLINSON AT retomlinso@pa.gov

Rate and consumption of utilities for DCNR Region 2 GESA (DGS Small GESA 4)

ANNUAL	Electricity		Water		Sewer		Natural Gas		Fuel Oil	
	Rate per kWh	Consumption/ Usage in kWh	Rate per gal or ccf	Consumption/ Usage in gal or ccf	Rate per gal or ccf	Consumption/ Usage in gal or ccf	Rate per ccf	Consumption/ Usage in ccf	Rate per gal	Consumption/ Usage in gal
Forest Dist #4	$0.103 to 350kWh $0.086 after 350 kWh	29,710	$0.027/gal	31,000	Verify on-site septic system		$0.5990	3,360	$1.7500	1,214
Forest Dist #6	$0.103 to 350kWh $0.086 after 350 kWh	20,911	$47.00/5,000 gallons $6.15/for every 1,000+	15,000	$97.50/5,000 gallons $8.75 for every 1,000+	15,000	$0.2989	4,859	$1.1979	1,867
Forest Dist #8	Estimated $0.0629	68,208	$0.9891/gal	18,900	$0.010073/gal	18,900	Estimated $0.8600	3,296	Not Applicable	Not applicable
Forest Dist #14	$0.1090	2,927	Supplied by Warren State Hospital		Supplied by Warren State Hospital		$0.4024	477	Not Applicable	Not Applicable
*Alleghany Islands SP	Possibly no infrastructure (Verify w/ Kevin Blair)			?	?	?	?	?	?	?
Clear Creek SP	$0.1500	204,994	Park Operated Water Treatment Plant		Park Operated Sewage Treatment Plant		Not applicable	Not applicable	Fuel Oil $2.1319 Propane $1.7900	Fuel Oil 2,808 Propane 10,999
Cook Forest State SP	$0.1600	496,566	Park Operated Water Treatment Plant		Park Operated Sewage Treatment Plant		$0.7100	10,999	Not Applicable	Not Applicable
*Erie Bluffs SP	No infrastructure									
Hillman State Park	No data on file/available (Verify w/ Al Wasilewski)			?	?	?	?	?	?	?
Jennings Env Ed Cen	$0.0575	72,589	Verify on-site well water		Verify on-site treatment system		Not applicable	Not applicable	Fuel Oil $1.7300 Propoane $3.5490	Fuel Oil 950 Propane 413
Keystone State Park	$0.0799	387,638	6" meter: $1283.20/quarter min. + $427.73/mo. min. per 1000 gal + next 237k gallons $7.49/1000 gal	1,626,000	Park Operated Sewage Treatment Plant	Gallons treated on-site: 1,849,863	Not applicable	Not applicable	Fuel Oil $1.7300 Propane $3.07	Fuel Oil 1,205 Propane 980
Kooser State Park	TEM $0.06339 Consellation $0.06107 WGL $0.04445	28,976	On-site well water	Not applicable	Septic/holding tanks	Not applicable	Not applicable	Not applicable	Not Applicable	Combined as part of Laurel Hill numbers
Laurel Hill State Park	$0.1233	553,705	On-site well water		On-site treatment system	Gallons treated on-site: 1,373,000	Not applicable	Not applicable	Fuel Oil $1.44/$1.15 Propane $1.79	Fuel Oil 3,283 Propane 579
Laurel Mtn State Park	Part of Linn Run Complex		On site well water	Not applicable	Septic/holding tanks	Not Applicable	Not applicable	Not applicable	Paid for by concessionaire	
Laurel Ridge SP	Part of Laurel Hill Complex		On-site well water	Not applicable	Septic/holding tanks	Not applicable	Not applicable	Not applicable	Not applicable	Combined as part of Laurel Hill numbers
Laurel Summit SP	Part of Linn Run Complex		On-site well water	Not applicable	Septic/holding tanks	Not applicable	Not applicable	Not applicable	Not applicable	Not applicable
Linn Run State Park	Constellation $0.0571	184,708	On-site well water	Not applicable	Septic/holding tanks	Not applicable	Not applicable	Not applicable	Fuel Oil $1.6291 Propane $1.5261	Fuel Oil 1,473.03 Propane 355.9
Maurice K. Goddard SP	$0.0996	132,234	$35.00/month	11,646 gals + 1,035 gals bottled water	$30/month up to 3333 + $5/1000 gallons after	1,340,000	Not applicable	Not applicable	Propane $1.2990	At Residence: **720.1 gals/yr** At Park Office: **18 gals/day**
McConnell's Mill SP	$0.0708	14,810	On-site well water		Septic/holding tanks	Not applicable	Not applicable	Not applicable	$1.7300	550

ANNUAL	Electricity		Water		Sewer		Natural Gas		Fuel Oil	
	Rate per kWh	Consumption/ Usage in kWh	Rate per gal or ccf	Consumption/ Usage in gal or ccf	Rate per gal or ccf	Consumption/ Usage in gal or ccf	Rate per ccf	Consumption/ Usage in ccf	Rate per gal	Consumption/ Usage in gal
Moraine State Park	Cent Elec: $0.135 West Penn: $0.0772 Constellation: $0.0575 TEM: ?	West Penn: 625,321 Cent Electric: 407,502 Park notified by West Penn that Constellation ended supplier contract for park accounts as of 20 Jan 2017	Park Operated Water Treatment Plant	Approx. 14 million gallons produced at water plant per year	Park Operated Sewage Treatment Plant	Average flow of 0.225 million gallons per day	Not applicable	Not applicable	$1.3600	2,600
Ohiopyle State Park	Constellation: $0.575 First Energy: $$0.0799 Somerset: $0.1034 WGL: $0.0657 West Penn: $0.0657	1,598,492	2" meter: $155.25-1st 10,000 gal + $5.75 per 1,000 gal next 10,000 + $4.60 per 1,000 gal next 10,000 + $3.86 per 1,000 gal next 10,000 * Indian Creek - water flat rate - $12-$96 -5/8" to 2" meter	1,433,780	5/8" - 2" meter $45 - $600 flat fee	382,800	Not applicable	Not applicable	$1.2900	$2,150.00
Oil Creek State Park	TEM $0.06339	43,824	Verify on-site wellwater		Verify on-site treatment system		$0.3891	3,083	Propane $1.0390	Propane 3,278
Point State Park	TEM: $0.0657 Duquense: $0.0662	135,981	Min 6" line = $1,601.63 + 1-1/2"line = $112.29 + $5.52 per 1,000 gal over 185,000	11,205,000	Min 6" line = $792.02 + 1-1/2"line = $45.26 + $3.89 per 1,000 gal over 185,000	434,281	$0.6390	28	Not Applicable	Not applicable
Presque Isle SP	Penn Elec: $0.0669 Northwestern: $0.0669	1,414,480	$3.62/ccf	8" line 9,577 4" line 1,147	$84/per $2,339 cf	8" line 9,577 4" line 1,147	$0.4500	32,901	Propane $0.8998	Propane 14,248.6
Pymatuning SP	PA Power: $0.07084 PA Elec: $0.06339 Northwstrn: $0.05193	693,001	$0.0021/gal	518,000	$4,000/mo during summer months/ 11.33% of O&M (sewage agreement)	Unknown	Not applicable	Not applicable	Fuel Oil $1.5000	Fuel Oil 6,384 Propane 2,873
Raccoon Creek SP	Constellation/ Duquense: $0.626 - $0.0783 (variable)	582,817	Verify on-site well water		Verify on-site treatment system		Not applicable	Not applicable	Fuel Oil $1.5850 Propane $1.0648	Fuel Oil 416.74 Propane 6538.7
Ryerson Station SP	Constellation $0.0571 WGL $ 0.059	153,263	2" mtr: $120.00/$0.0047 per gal	711, 960	Verify on-site treatment system		Not applicable	Not applicable	Propane $1.2800	Propane 6,427.80
Yellow Creek SP	$0.0610	186,697	Verify on-site well water		Verify on-site treatment system		Not applicable	Not applicable	Fuel Oil $1.7300 Propane $2.6290	Fuel Oil 678 Propane 970

PLEASE NOTE:
Prior DGS surveys, DGS's ERMA datbase and the SAP database have all been crossed-checked for the above information. A "**?**" represents information unavaliable from those previously investigated sources.

INSTRUCTIONS:

1. For each item marked above with a "**?**", DGS requires the actual associated information to be completed for the Region 2 and corresponding Forest District GESA (DGS Small GESA 4).
2. Where a "**?**" appears for a utility rate for your respective Forest District or State Park, please provide it in the format requested (i.e. $/kWh, $/gal or $/ccf) for the current rate.
3. Where a "**?**" appears for annual consumption/usage for your respective Forest District or State Park, please provide the total annual consumption/usage in the format requested (kWh, gal or ccf) for the most current year.
4. If an inaccuarcy appears, please provide the correct information and highlight it.
5. Since FDC will be compiling this info for DGS prior to handing it over to them, please return your completed portion to FDC by the beginning of the day on **February 1.**

Rate and consumption of utilities for DCNR Region 2 GESA (DGS Small GESA 4) *This sheet shown for cost data information only.*

LOCATION	YEAR											
	Electricity			Water & Sewer			Heating Fuel			Totals		
	2012-2013	2013-2014	2014-2015	2012-2013	2013-2014	2014-2015	2012-2013	2013-2014	2014-2015	2012-2013	2013-2014	2014-2015
Forest Dist #4	$12,118.84	$17,519.47	$13,771.46	$1,784.65	$1,862.38	$1,948.57	$18,365.69	$18,644.21	$18,159.95	$32,269.18	$38,026.06	$33,879.98
Forest Dist #6	$6,687.55	$5,791.18	$5,240.95	$955.65	$812.60	$1,834.79	$8,408.41	$7,625.80	$7,143.63	$16,051.61	$14,229.58	$14,219.37
Forest Dist #8	$6,366.63	$6,709.87	$6,789.62	$1,418.92	$1,295.08	$1,394.93	$1,037.00	$1,993.31	$1,995.83	$8,822.55	$9,998.26	$10,180.38
Forest Dist #14	$3,468.12	$3,329.41	$2,839.50	$518.95	$610.99	$1,225.87	$615.39	$1,890.42	$2,867.40	$4,602.46	$5,830.82	$6,932.77
*Alleghany Islands SP	Possibly no infrastructure (Verify w/ Kevin Blair)											
Clear Creek SP	$27,512.64	$25,091.34	$23,437.14	$0.00	$0.00	$0.00	$14,451.83	$29,353.27	$24,332.01	$41,964.47	$54,444.61	$47,769.15
Cook Forest State SP	$71,112.63	$61,014.10	$57,497.40	$0.00	$0.00	$0.00	$7,269.69	$11,081.47	$11,291.61	$78,382.32	$72,095.57	$68,789.01
*Erie Bluffs SP	Possibly no infrastructure (Verify w/ Mathew Greene)											
Hillman State Park	No data on file/available (Verify w/ Al Wasilewski)											
Jennings Env Ed Cen	$4,825.70	$5,459.66	$6,173.29	$0.00	$35.26	$0.00	$5,620.25	$4,259.91	$5,162.05	$10,445.95	$9,754.83	$11,335.34
Keystone State Park	$25,276.75	$36,432.09	$34,851.85	$13,199.57	$17,176.42	$15,460.85	$2,844.80	$3,593.06	$3,355.50	$41,321.12	$57,201.57	$53,668.20
Kooser State Park	$25,635.83	$26,258.46	$28,976.32	$0.00	$0.00	$0.00	$0.00	$0.00	$0.00	$25,635.83	$26,258.46	$28,976.32
Laurel Hill State Park	$53,816.60	$78,778.14	$52,211.92	$9,195.21	$0.00	$0.00	$19,137.82	$34,851.40	$19,934.43	$82,149.63	$113,629.54	$72,146.35
Laurel Mtn State Park	Possibly part of Laurel Hill State Park Complex (Verify w/ Michael Mumau)											
Laurel Ridge State Park	Possibly part of Laurel Hill State Park Complex (Verify w/ Michael Mumau)					$0.00	$3,114.00	$0.00	$0.00	$3,114.00	$0.00	$0.00
Laurel Summit SP	Possibly part of Linn Run State Park Complex (Verify w/ Michael Mumau)											
Linn Run State Park	$12,807.52	$14,603.23	$17,019.03	$0.00	$0.00	$0.00	$13,685.99	$17,785.79	$5,152.92	$26,493.51	$32,389.02	$22,171.95
Maurice K. Goddard SP	$11,089.99	$13,875.14	$14,739.67	$4,110.00	$4,825.00	$4,935.00	$14,185.76	$14,671.90	$2,547.80	$29,385.75	$33,372.04	$22,222.47
McConnell's Mill SP	$1,768.46	$2,021.69	$2,073.16	$0.00	$0.00	$0.00	$0.00	$0.00	$0.00	$1,768.46	$2,021.69	$2,073.16
Moraine State Park	$101,976.27	$120,224.63	$114,460.44	$22,327.02	$25,094.66	$9,941.49	$14,562.47	$15,484.84	$12,126.44	$138,865.76	$160,804.13	$136,528.37
Ohiopyle State Park	$46,318.28	$46,030.78	$66,950.68	$33,842.99	$33,822.82	$31,487.36	$13,215.43	$33,733.72	$11,281.98	$93,376.70	$113,587.32	$109,720.02
Oil Creek State Park	$4,757.92	$5,099.43	$5,406.72	$0.00	$0.00	$0.00	$0.00	$0.00	$0.00	$4,757.92	$5,099.43	$5,406.72
Point State Park	$80,576.05	$125,015.19	$144,198.27	$23,190.48	$18,047.28	$0.00	$4,622.66	$3,777.14	$2,759.74	$108,389.19	$146,839.61	$146,958.01
Presque Isle SP	$182,711.35	$169,450.26	$154,648.01	$29,680.89	$33,973.73	$35,823.68	$41,786.21	$65,250.45	$50,340.85	$254,178.45	$268,674.44	$240,812.54
Pymatuning SP	$115,651.46	$137,047.47	$124,013.84	$123,090.54	$140,529.97	$132,611.28	$23,881.70	$4,905.61	$16,105.69	$262,623.70	$282,483.05	$272,730.81
Raccoon Creek SP	$59,712.76	$65,971.66	$74,970.86	$0.00	$0.00	$0.00	$22,531.66	$33,621.98	$11,411.32	$82,244.42	$99,593.64	$86,382.18
Ryerson Station SP	$11,862.00	$19,289.67	$14,121.52	($474.56)	($1,151.03)	$435.42	$0.00	$0.00	$0.00	$11,387.44	$18,138.64	$14,556.94
Yellow Creek SP	$29,911.75	$30,016.35	$25,844.61	$0.00	$0.00	$0.00	$6,034.76	$17,121.75	$0.00	$35,946.51	$47,138.10	$25,844.61
Grand Total	**$895,965.10**	**$1,015,029.22**	**$990,236.26**	**$262,840.31**	**$276,935.16**	**$237,099.24**	**$235,371.52**	**$319,646.03**	**$205,969.15**	**$1,394,176.93**	**$1,611,610.41**	**$1,433,304.65**

DATE OF ISSUE: FEBRUARY 23, 2017

DEPARTMENT OF GENERAL SERVICES
ENERGY AND RESOURCE MANAGEMENT OFFICE
401 NORTH STREET
HARRISBURG, PENNSYLVANIA

BULLETIN NO. 7
on

Project No. Small GESA-4 – REQUEST FOR PROPOSALS FOR A GUARANTEED ENERGY SAVINGS PROJECT AT: DEPT. OF CONSERVATION AND NATURAL RESOURCES, PARKS AND FOREST, WESTERN PENNSYLVANIA, Department of General Services, Energy & Resource Management, 401 North Street, Room 403, Harrisburg, Pennsylvania, 17120.

PROPOSAL SUBMISSION DEADLINE, FRIDAY MARCH 10, 2017
TIME OF OPENING: 11:00 AM

QUESTIONS/ANSWERS

1. Because there are so many DCNR sites to manage in the project and so many tasks to complete is it OK for the "sample schedule" to consist of multiple fold-out 11 x 17 sheets and have them not be included in the total Technical Submission page count?

Answer: Yes, this will be fine.

RFP CHANGES

1. Replace *Part One, Sections 1.13- 1.15 Small Diverse Business Information* with the following:
   1.13 Small Diverse Business Information. DGS encourages participation by Small Diverse Businesses as prime contractors, and encourages all prime contractors to make significant commitments to use Small Diverse Businesses as subcontractors and suppliers. In order to be considered a Small Diverse Business, a business must meet the requirements of both a "Small Business" and "Small Diverse Business" set forth below:

   A Small Business must meet each of the following requirements:

   - The business must be a for-profit, United States business;
   - The business must be independently owned;
   - The business may not be dominant in its field of operation;

- The business may not employ more than 100 full-time or full-time equivalent employees;
- The business, by type, may not exceed the following three-year average gross sales:
  - Procurement Goods and Services: $20 million
  - Construction: $20 million
  - Building Design Services: $7 million
  - Information Technology Goods and Services: $25 million

For credit in the RFP scoring process, a Small Business must complete the DGS/BDISBO self-certification process. Additional information on this process can be found at:
http://www.dgs.pa.gov/Businesses/Small%20Business%20Contracting%20Program/Pages/default.aspx.

A Small Diverse Business is a DGS-verified minority-owned small business, woman-owned small business, veteran-owned small business, service-disabled veteran-owned small business, LGBT-owned small business, Disability-owned small business, or other small businesses as approved by DGS, that are owned and controlled by a majority of persons, not limited to members of minority groups, who have been deprived of the opportunity to develop and maintain a competitive position in the economy because of social disadvantages.

For credit in the RFP scoring process, a Small Diverse Business must complete the DGS verification process. Additional information on this process can be found at:
http://www.dgs.pa.gov/Businesses/Minority,%20Women%20and%20Veteran%20Businesses/Pages/default.aspx.

The Department's directory of self-certified Small Businesses and DGS/BDISBO-verified Small Diverse Businesses can be accessed from:
http://www.dgs.pa.gov/Businesses/Minority,%20Women%20and%20Veteran%20Businesses/Small-Diverse-Business-Verification/Pages/Finding-Small-Diverse-Businesses.aspx.

Questions regarding the Small Diverse Business and Small Business Programs, including questions about the self-certification and verification processes can be directed to:

Department of General Services
Bureau of Diversity, Inclusion and Small Business Opportunities (BDISBO)
Room 601, North Office Building
Harrisburg, PA 17125
Phone: (717) 783-3119
Fax: (717) 787-7052
Email: RA-BDISBOVerification@pa.gov

Website: www.dgs.pa.gov

1.14 Small Diverse Businesses that submit a Proposal as a Prime Proposal will not receive credit for their own status as a Small Diverse Businesses.
A Payments to Small Diverse Businesses that are subcontractors of any level to the Small GESA Contractor will count toward the Small Diverse Business participation total based upon the dollar value of their work.

1.15 BDISBO shall provide the awarded Proposer a Small Diverse Business Participation Plan (Plan) Form at the Initial Job Conference. The Plan, which will be completed by the awarded Proposer, shall include a list of proposed DGS-verified SDB subcontractors, manufacturers and suppliers the awarded Proposer will use on the project, along with the scope of work and/or supplies to be provided by each individual SDB. The awarded Proposer shall provide the completed Small Diverse Business Participation Plan to BDISBO within (30) days of the Initial Job Conference.

2. Replace *Part Two, Section 2.4 Small Diverse Business Submission* with the following:

2.4 Small Diverse Business Submission

Each Proposer shall submit one (1) copy of its Small Diverse Business Submission in a sealed envelope separate from the Technical and ECM/Cost Submissions. The SDB Submittal Form is provided as an appendix to this RFP. A value for each ECM with its associated Small Diverse Business participation percentage should be entered into the Small Diverse Business Submission Form. If no form is submitted or if the submitted form is left blank, DGS will presume that the value is 0% for each ECM and the submission will be scored accordingly. If a Proposer commits to 0%, the proposal will not be rejected as non-responsive, but the Proposer will receive 0 points for their Small Diverse Business Submission.

A. The Small Diverse Business Submission percentage per ECM represents the dollar value the Small GESA Contractor will pay to Small Diverse Businesses for that ECM in accordance with the calculation in section D below.

B. Small Diverse Businesses may provide a wide variety of services and supplies on any Small GESA project. Commitments include payments beyond the initial tier of subcontractors and suppliers (“trickle down” until payments are made to an SDB) and may also include design costs.

C. The Small Diverse Business Submission percentage for each Core ECM will apply to the value of each ECM included in the Small GESA Contract. Deletion of a core ECM will also delete that ECM’s SDB percentage. Any SBD commitments on non-core ECM’s will not count toward the overall commitment percentage.

D. The Proposer should recognize that:

1. Small Diverse Business subcontractors performing at least 60% of the subcontract with their own employees will be credited toward the provided Small Diverse Business percentage at 100% of the total dollar value of the subcontract/supply contract. Any Small Diverse Business

subcontract where the subcontractor performs less than 60% of the subcontract will not be credited.

2. Small Diverse Business manufacturers are credited at 100% of the total cost of the materials or supplies purchased.

3. For each Small Diverse Business which is a supplier, the Proposer shall specify whether that supplier is a stocking or non-stocking supplier.

a. Stocking suppliers will be credited at 60% of the total cost of the materials or supplies purchased.

b. Non-Stocking suppliers, are credited at only the amount of the fee or commission charged by the Small Diverse Business non-stocking supplier for assistance in the procurement of the materials and supplies provided the fees or commissions are reasonable and not excessive as compared with fees customarily allowed for similar services and with the understanding that under no circumstances shall the credit, for a Small Diverse Business non-stocking supplier, exceed 10% of the purchase order cost.

3. Replace *Part Three, Section 3.3 (C) Proposal Scoring Process, Point 3 (Small Diverse Business Submission Scoring) & Point 4 (Total Proposal Score and Recommendation Memo)* with the following:

3. Small Diverse Business Submission Scoring

a. Proposals shall be scored on an objective basis, based upon their individual commitments to Small Diverse Businesses. The Proposer with the highest Small Diverse Business (SDB) percentage will receive the most points. The other Proposers will receive points based upon the formula set forth below. Proposers acknowledge that this commitment percentage per ECM constitutes a material element of the scoring for this RFP and will be included as the binding percentages of the selected ECMs in the Small GESA Contract. Failure to meet or exceed each ECM percentage included in the Small GESA Contract may be deemed to be a breach of contract.

$$500 - \frac{(500 \times (\text{Highest Proposer's SDB \%} - \text{Proposer's SDB \%}))}{(\text{Highest Proposer's SDB \%})}$$

4. Total Proposal Score and Recommendation Memo

a. After BDISBO calculates the Small Diverse Business Submission scores, the Issuing Officer will calculate the Total Proposal Score using the Selection Formula set forth in this RFP.

4. Replace *Appendix I, Administrative Procedure #15 Small Diverse Business and Small Business Participation* with the attachment found at the end of this bulletin.

R. Tomlinson

Rebecca Tomlinson, RFP Coordinator
ENERGY & RESOURCE MANAGEMENT OFFICE

PLEASE ACKNOWLEDGE RECEIPT OF BULLETIN WITHIN 24 HOURS BY EMAIL RESPONSE TO REBECCA TOMLINSON AT retomlinso@pa.gov

REMAINDER OF PAGE INTENTIONALLY LEFT BLANK

ADMINISTRATIVE PROCEDURE #15

SMALL DIVERSE BUSINESS and SMALL BUSINESS

PARTICIPATION

A. General Information:

1. The Small GESA Contractor must meet or exceed the participation percentages provided in the Small Diverse Business Submittal for Minority Business Enterprises (MBE), Women Business Enterprises (WBE), Veteran Business Enterprises (VBEs), Service-Disabled Veteran Business Enterprises (SDVBEs), Disability-Owned Business Enterprise (DOBE), and LGBT Business Enterprise (LGBTBE) (together referred to hereinafter as Small Diverse Businesses) on the Project as follows:

2. The participation level for each ECM shall apply to the total ECM value.

3. The Small Diverse Business participation may include all tiers of design and/or construction.

B. Small GESA Contractor's Duty

1. The participation percentage for each ECM provided in the Small Diverse Business Submittal is to be maintained throughout the term of the Contract and shall apply to the ECM value.

2. The Small GESA Contractor shall submit a Small Diverse Business Utilization Report with each Application for Payment (See section C below).

3. The Small GESA Contractor has until the date of the Final Inspection to meet or exceed the participation percentage for the ECM. This will be tracked through the Small Diverse Business Utilization Report.

C. Small Diverse Business Utilization Report

1. This report must be submitted with each Application for Release of Payment.

2. Starting with either the first full month after the Initial Job Conference or the first Application for Release of Payment (whichever is earlier), the Small GESA Contractor must submit a Small Diverse Business Utilization Report. Thereafter, an updated Small Diverse Business Utilization Report shall be submitted with each Application for Release of Payment.

3. Each Small Diverse Business Utilization Report must have current data (totals to date) identifying at least each element as follows:

    a Detailed information including, but not limited to, any subcontracts and purchase orders documenting the dollar value commitments to Small Diverse Business firms to be used toward the satisfaction of the ECM participation percentages provided in the Small Diverse Business Submittal. All Small Diverse Businesses identified on the Utilization Report shall be retained on the Utilization Report throughout the duration of the Project.

b Detailed information regarding any work that is claimed to be self- performed by the GESA Contractor and therefore allegedly not eligible for subcontracting to a Small Diverse Business.

c Construction Subcontracts and Purchase Orders:

i All Subcontract/Purchase Orders awarded to date are $_____

ii Commitment total to Small Diverse Businesses to date:

iii $ _____

iv % _____

v For each subcontract and purchase order awarded since the previous Application for Release of Payment the:

- Identity and status of the Small Diverse Business as a MBE/WBE/VBE/SDVBE that will be performing the work; and
- The ECM for which the work will be performed; and
- The type of work/service/material to be performed/supplied; and
- The amount paid to date on each Small Diverse Business subcontract/purchase order this month.
- The designation of Small Diverse Business Stocking Suppliers as either a MEP (i.e., mechanical, electrical, and plumbing) Stocking Suppliers or a General Construction Stocking Supplier.
- The fee or commission paid to the Nonstocking Supplier. No credit will be given if the fee or commission is not listed and, the maximum credit shall not exceed 10 percent of the purchase order cost.

d Failure to submit a Small Diverse Business Utilization Report with each Application for Release of Payment will result in an incomplete Application for Release of Payment. Such incomplete Application will be returned to the Small GESA Contractor and no payment will be processed until a complete Application is submitted.

D. The Small GESA Contractor's Commitments Toward the Submitted Participation Levels will be Calculated and Credited as follows:

1. Only DGS-certified Small Diverse Businesses can be credited toward satisfying the participation percentages provided in the Small Diverse Business Submittal.

2. Small Diverse Business subcontractor performing at least sixty percent (60%) of the subcontract with their own employees will be credited toward the submitted percentage at 100 percent of the total dollar value of the subcontract/supply contract. Any Small Diverse Business subcontract, where the subcontractor performs less than 60% of the subcontract, will not be credited toward the submitted percentage.

4. Small Diverse Business stocking suppliers are credited at 60 percent of the total cost of the materials or supplies purchased. A stocking supplier is a regular dealer that owns, operates, or maintains a store, warehouse, or other establishment, in which the materials or supplies of the general character described by the specifications and required under the contract are bought, kept in stock, and regularly sold or leased to the public in the usual course of business.

5. Small Diverse Business nonstocking suppliers are credited at only the amount of the fee or commission charged by the Small Diverse Business nonstocking supplier for assistance in the procurement of the materials and supplies provided the fees are reasonable and not excessive as compared with fees customarily allowed for similar services and under no circumstances shall the credit, for a Small Diverse Business nonstocking supplier, exceed 10% of the purchase order cost. A nonstocking supplier does not carry inventory but orders materials from a manufacturer, manufacturer's representative or a stocking supplier. In order for a nonstocking supplier to receive credit, it must perform a useful business function by engaging in meaningful work (i.e., negotiating price; AND determining quality and quantity; AND ordering materials; AND paying for the materials) and the fee or commission must be provided with the purchase order and the Small Diverse Business Utilization Report. Industry practices and other relevant factors will be considered.

6. Small Diverse Business manufacturers are credited at 100 percent of the total cost of the materials or supplies purchased.

7. The Small GESA Contractor is allowed to use contract amounts at any tier of supply or subcontracting; however the dollar value of any commitment to a Small Diverse Business cannot be double counted.

    a If the Small GESA Contractor or any of its non-Small Diverse Business Subcontractors or Suppliers makes a commitment to a Small Diverse Business, the credit for the subcontract/purchase order commitment, regardless of the level or tier, shall be calculated as indicated in Section D and credited toward the participation percentage provided in the Small Diverse Business Submittal.

    b In the event that the Small Diverse Business whose entire subcontract value is counted towards the Small GESA Contractor's Minimum Participation Level and then subcontracts a portion of the work or supplies associated with this subcontract to another Small Diverse Business, the dollar value of the subcontract with/to this lower tier Small Diverse Business is NOT counted in the Small GESA Contractor's Participation Level in order to prevent the duplicate counting of Small Diverse Business commitment dollars. In this case, the dollar value of this subsequent Small Diverse Business subcontract has already been included within the scope of work and dollar value of the Small Diverse Business commitment already counted as a part of the Small GESA Contractor's Minimum Participation Level.

8. All Small Diverse Businesses must present a photocopy of their current Small Diverse Business certificate from DGS to the Small GESA Contractor**. The certificate must be current as of the subcontract / purchase order execution date, not revoked, lapsed or pending, in order to obtain credit for the commitment.**

9. A Small GESA Contractor's Small Diverse Business participation level per ECM is calculated by adding all or a percentage of the dollar commitments (as described in this section D) to DGS-certified Small Diverse Business subcontractor s of all tiers, DGS-certified Small Diverse Business manufacturers, DGS-certified Small Diverse Business stocking suppliers, and the fee or commission paid to the DGS-certified nonstocking supplier and dividing that total amount by the total ECM price.

10. Upon receipt of the Small GESA Contractor Small Diverse Business Utilization Report, DGS will verify the certification status of the subcontractor, manufacturer, stocking supplier, or nonstocking supplier. Once reviewed by DGS, the dollar value of the subcontract or purchase order, or a percentage thereof, shall be calculated as part of the total dollar value of the Small Diverse Business participation level for the ECM.

E. Remedies

10. The DGS may, in accordance with the General Conditions for the GESA Contracts (Payments Withheld), decline to approve an Application for Release of Payment in whole or in part if the Small Diverse Business Utilization Report is not included and return the incomplete Application for Release of Payment.

11. If after the first three months following Contract execution, the Small GESA Contractor fails to progress in achieving the participation percentage provided in the Small Diverse Business Submittal (based upon the data supplied in the Small Diverse Business Utilization Report), the Funding Agency may withhold payments until the GESA Contractor and the Funding Agency discuss the reasons for lack of progress and achieve a resolution. The Small GESA Contractor is not entitled to interest on any funds withheld due to their failure to submit a properly completed Small Diverse Business Utilization Report or their failure to progress in achieving the participation level.

12. The Small GESA Contractor's compliance with requirements of the Small Diverse Business participation component, including the fulfillment of any Small Diverse Business commitments in all subcontracts and purchase orders is material to the contract between the GESA Contractor and the Funding Agency. Any failure to comply with these requirements constitutes a substantial breach of the Contract. It is further understood and agreed that in the event the Funding Agency determines that the Small GESA Contractor has failed to comply with these requirements, the Funding Agency may, in addition to any other rights and remedies the Funding Agency may have under the contract, any bond filed in connection therewith, or at law or in equity, impose remedies as applicable on the Small GESA Contractor. Remedies for breach of this component may include entry into the CRP, termination, suspension, default, penalties, and/or debarment from future contracting opportunities with the Commonwealth of Pennsylvania. The remedies enumerated herein are for the sole benefit of the Funding Agency and the Funding Agency's enforcement of any provision or the Funding Agency's indulgence of any non-compliance with any provision hereunder shall not operate as a waiver of any of the Funding Agency's rights in connection with the Contract, nor shall it give rise to actions by any third parties, including any Small Diverse Business enterprises.

DATE OF ISSUE: FEBRUARY 28, 2017

DEPARTMENT OF GENERAL SERVICES
ENERGY AND RESOURCE MANAGEMENT OFFICE
401 NORTH STREET
HARRISBURG, PENNSYLVANIA

BULLETIN NO. 8
on

Project No. Small GESA-4 – REQUEST FOR PROPOSALS FOR A GUARANTEED ENERGY SAVINGS PROJECT AT: DEPT. OF CONSERVATION AND NATURAL RESOURCES, PARKS AND FOREST, WESTERN PENNSYLVANIA, Department of General Services, Energy & Resource Management, 401 North Street, Room 403, Harrisburg, Pennsylvania, 17120.

PROPOSAL SUBMISSION DEADLINE, FRIDAY MARCH 10, 2017
TIME OF OPENING: 11:00 AM

REQUEST FOR INFORMATION

All remaining utility invoices that were made available to DGS can be found on our website until March 10, 2017. Please go to www.dgs.pa.gov then navigate to State Government > Facilities & Space Management > Energy Savings Program.
To view the utility invoices, click on "SM GESA 4 - DCNR Western Region" under the "Current Projects" area.



_____

Rebecca Tomlinson, RFP Coordinator
ENERGY & RESOURCE MANAGEMENT OFFICE

PLEASE ACKNOWLEDGE RECEIPT OF BULLETIN WITHIN 24 HOURS BY EMAIL RESPONSE TO REBECCA TOMLINSON AT retomlinso@pa.gov



TECHNICAL SUBMISSION

Photo: Charlene Reinhart

PA SMALL GESA-4 PROJECT FOR DEPARTMENT OF GENERAL SERVICES
AT
DEPARTMENT OF CONSERVATION AND NATURAL RESOURCES
WESTERN REGION

ESG ENERGY SYSTEMS GROUP

Tony Prelec, Sales Account Executive

Harrisburg, PA | March 10, 2017

©2017 Energy Systems Group, LLC

TABLE OF CONTENTS

2.2 Technical Section

2.2-1 Project Management Team Overview

a. Organization Chart including assignment of tasks, reporting structure, specific roles, and subcontractor selection
b. Demonstration of successful history by core project team members
c. Description of specific and meaningful roles fulfilled by core team
d. Established history of working relationship between proposer, retained professional, & selected subcontractors on GESA projects

2.2-2 Work Plan for this Project

a. Proposal contains detailed description of how ESG will coordinate with DGS and Funding Agency
b. Proposal demonstrates thorough understanding of the design process and how ESG will coordinate with retained professional
c. Proposal demonstrates thorough understanding of the design process on Small GESA projects using DGS Procedure Manual
d. Proposal identifies design issues and describes how to manage and execute project
e. Proposal thoroughly describes construction challenges and proposed solutions
f. Proposal thoroughly describes a construction plan, including site operations, logistics, lay down areas and a detailed discussion about how to execute the project in a downtown location
g. Proposal demonstrates thorough understanding of scheduling and construction practices using DGS' General Conditions and Admin. Procedures
h. Proposal describes project safety plan and monitoring
i. Proposal describes an effective Quality Control Plan
j. Proposal clearly describes Proposer's methodology for Commissioning this project
k. Proposal describes training of Funding Agency personnel, manuals, occupancy permits, commissioning and final close-out approach
l. Proposal clearly describes Proposer's methodology for creating the appropriate Measurement and Verification plan

©2017 Energy Systems Group, LLC

2.2-3 Critical Path Schedule

a. Narrative clearly identifies and discusses critical aspects of schedule, associated risks and process to ensure achievement of critical milestone dates
b. CPM sets forth a logical progression of critical path, including at least Notice of Award, duration and submission date of Energy Audit Report, full execution of Energy Contracts and permit submission, durations of on-site work, commissioning and training
c. CPM integrates and coordinates construction with local utilities, subcontractors, equipment suppliers and Funding Agency facility personnel

2.2-4 Qualifications, Experience & Past Performance

a. Proposal clearly explains the qualifications and experience of all core members, including project specific roles and not generalized work performed on projects
b. Proposal provides a detailed explanation of qualifications and experience for core members on LED conversions and HVAC controls
c. Proposal clearly identifies the Retained Professional's individual core personnel and clearly establishes the Retained Professional's ability to complete energy projects involving LED conversion and HVAC controls
d. Proposal demonstrates the Retained Professional's readiness and commitment of personnel
e. Proposal clearly establishes Subcontractors' ability to complete Small GESA projects since 2010 with the team identified in this proposal
f. Subcontractor's Qualification demonstrates readiness and commitment of personnel

Cover image courtesy of Charlene Reinhart char@zbzoom.net

©2017 Energy Systems Group, LLC

2-2.1 Project Management Team Overview

a. Organization Chart including assignment of tasks, reporting structure, subcontractor selection

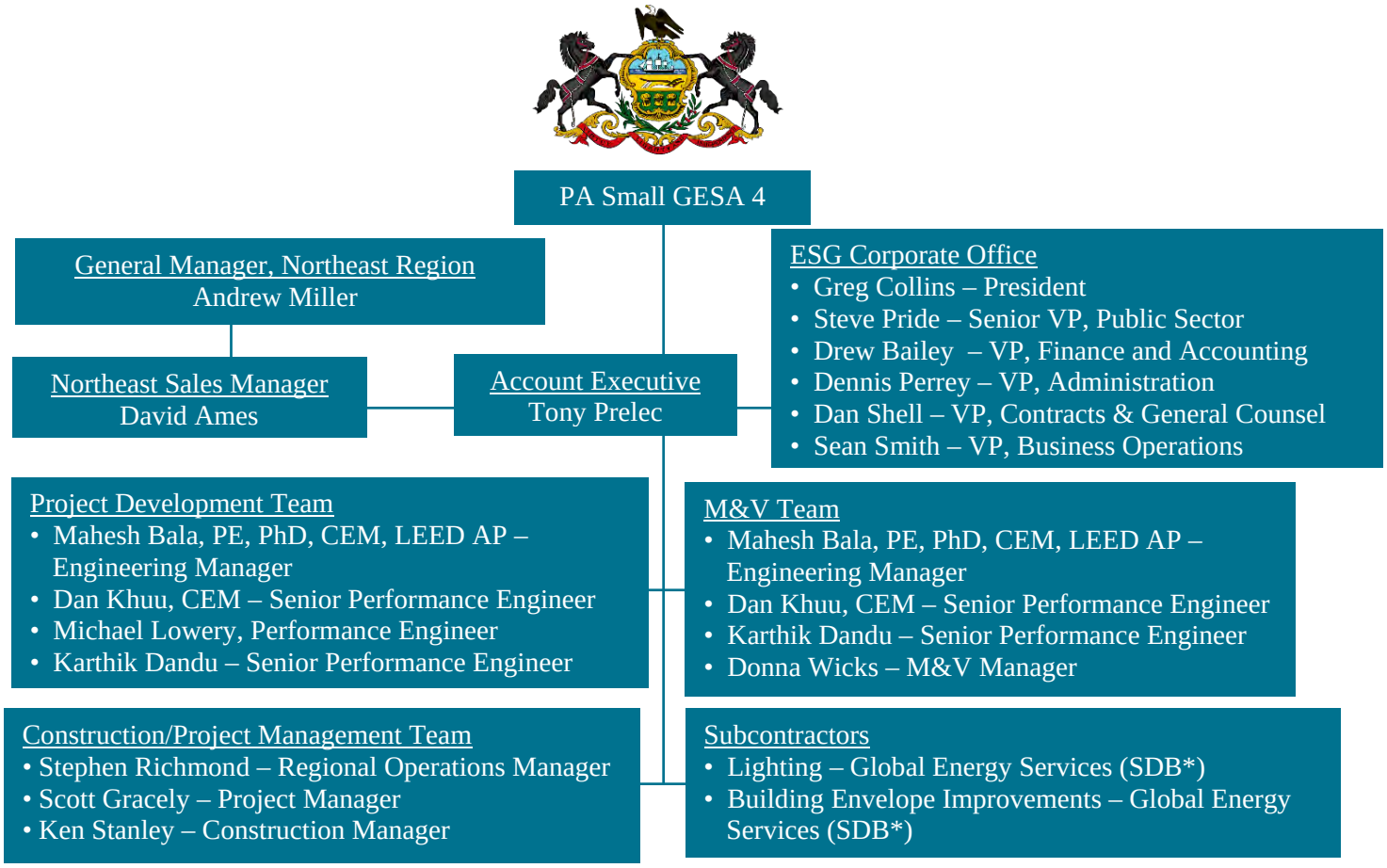

**SDB = Small Diverse Business*

b. Demonstration of successful history by core project team members

The ESG core project team members have collaborated on the successful implementation of numerous previous projects. Two of the most recent and noteworthy projects are the Pennsylvania SCI Dallas Large GESA Project and the City of Middletown Project, valued at $20M and $12M respectively. ESG's core project team, as identified on our organizational chart above, has continuously proven that its level of collaboration, knowledge, and creativity support the development and execution of highly successful energy savings projects.

Through the construction period alone, the SCI Dallas project has already generated approximately $5M in energy savings for the Commonwealth of Pennsylvania. Implementation of the SCI Dallas GESA project was overseen by Scott Gracely and Ken Stanley. ESG's Account Executive, Tony Prelec, worked meticulously with ESG's Development Team members and the Pennsylvania Department of Corrections to identify the most beneficial energy conservation measures (ECMs) for the project. The team initially identified 32 ECMs as suitable for

©2017 Energy Systems Group, LLC

implementation. In an effort to reduce the construction cycle time and realize a faster return on investment, ESG worked with Pennsylvania Department of Corrections and DGS, optimized the project to 6 large scale ECMs (LED lighting conversion, water conservation, boiler replacement, steam traps, kitchen equipment, WWTP upgrades).

The City of Middletown project highlights another successful project currently being implemented by the same core project team members. This $12M project consists of numerous complex ECMs ranging from LED lighting conversions, street light upgrades and transfer of street light ownership, to the complete replacement of all water meters throughout the community. The community has over seven thousand residences and will now incorporate a state-of-the-art water meter data collection system. In addition to the technical applications, the team identified several state funded incentive programs for the City of Middletown project. In total, over $280,000 in additional state-provided funding was captured to support the project. It is estimated that this project will generate $1.05M in energy and operational savings for the City of Middletown annually over the duration of the project.

c. Description of specific and meaningful roles fulfilled by core team

The meaningful roles fulfilled by the core project team supporting the Pennsylvania Small GESA 4 DCNR project are as follows:

Account Executive – Tony Prelec is responsible for monitoring the entire project and maintains accountability throughout all phases of the project. He manages the technical personnel and contract specialists to develop an accurate conception of the customer's requirements and concerns. In order to translate the customer's requests into a feasible, successfully installed solution, his primary role is to communicate with representatives of the Construction/Project Management and Project Development Teams: Performance Engineer, Mechanical Engineer, Electrical Engineer, Operations Manager, and Project Manager. Additionally, Tony has a wide knowledge base ranging from specialized energy reducing technologies to the business operations of GESA.

Northeast General Manager – Andrew Miller maintains direct interaction with the sales development and delivery teams from initiation to full implementation of ESG projects in the Northeast Region. His oversight reinforces our accountability to deliver the project according to the contractual agreement with a customer. Andrew works closely with the Teams to provide a compliant and responsive delivery. Finally, Andrew closely monitors project stability before, during and after project delivery.

Northeast Sales Manager – David Ames supports all phases of the sales process, leading the Sales Team throughout project development, implementation, and measurement/verification phases. David works closely with the Account Executive to discover and understand the customer's requirements, and works closely with the Project Development Team and other internal resources to translate those into feasible, installable solutions.

Northeast Engineering Manager – Mahesh Bala serves as a dedicated technical lead to the Project Development teams by coordinating engineering resources. Mahesh reviews the technical solution to ensure that it adequately addresses the mechanical- and energy-related challenges within the customer's facility. As required, Mahesh may also serve as a technical consultant for ESG's in-house staff on initiatives that include ECM innovation and investigations, equipment selection, savings calculations, and energy guarantee protocol development. He is engaged with every customer and their project from initial involvement with the operations team in the assessment, design, installation, and post-implementation.

©2017 Energy Systems Group, LLC

Regional Operations Manager – Stephen Richmond is the team coordinator for the project and is ultimately responsible for the delivery of the project. He also oversees all negotiations and contracts with subcontractors and vendors. Stephen works closely with the Account Executive to deliver a timely and logistically sound project. The Project Delivery Manager oversees and coordinates all project delivery. In the delivery of a project, Stephen oversees the Project Managers as an additional level of assurance that ESG and its subcontractors provide quality installations. Every effort is made to exceed customer expectations and promptly solve construction-related concerns in a timely, proactive manner.

Performance Engineers – Dan Khuu, Michael Lowery, and Karthik Dandu are responsible for identifying and focusing on the mechanical and energy-related improvements within a customer's facility. These performance engineers conduct site evaluations and collect information to develop comprehensive, cost-effective technical solutions that increase the operational efficiency of the site. The Performance Engineers are also responsible for providing ongoing technical support to the customer on the current and future energy and operating efficiencies. Their technical support includes appropriate equipment selection, proper installation, implementation of the ECMs as designed, and troubleshooting construction problems. Performance Engineers are customer facing. They are engaged from the outset with the Construction/Project Management Team in the design phase, the installation phase, and ongoing services. Finally, the Performance Engineers oversee the transition of the scopes for each ECM to the Project Development Team. Regular, detailed communication between the Performance Engineers and Account Executive guarantees a technically correct solution is delivered to the customer.

Project Manager Scott Gracely and Construction Manager (CM) Ken Stanley work closely with the Performance Engineer to advise and assist in estimating aspects of the project during the proposal development stage. Scott and Ken are in direct contact with the Electrical and Mechanical subcontractors, and the ESG Performance Engineers to obtain technical information and advice. The Project Manager is kept abreast of resource needs and, as their expertise relates to those resources, our management, finance, and accounting support departments are consulted.

Once the Small GESA 4 is under contract, Scott and Ken will work closely with the Department of Conservation and Natural Resources Parks & Forest in Western Pennsylvania to initiate the projects at each of its facilities in the scope of the project. Detailed coordination with each DCNR Park Manager will be critical to the success of the Project.

Measurement and Verification (M&V) Manager - Donna Wicks has the responsibility of monitoring the guarantee and reporting results to the funding agency, the Department of Conservation and Natural Resources, in a format that is clear and concise. With over 19 years of experience implementing M&V programs, Donna has the expertise to identify what factors affect energy savings and to calculate savings within varying parameters: some customers may prefer modified baselines showing monthly deviations, while others may prefer to see only savings based on initial verifications and measured equipment operation. Maintaining and tracking guaranteed energy savings over the length of the contract term is the final step of a Performance Contract.

©2017 Energy Systems Group, LLC

d. Established history of working relationship between proposer, retained professional and subcontractors on GESA

As one of the larger energy services companies (ESCOs) within the United States, ESG employs highly skilled and technically trained professionals. We do not retain independent professionals on a short-term contract basis. Key personnel[1] are all permanent employees with a vested interest in the success of ESG and its projects. The Retained Professionals, as referenced in the RFP, are the full time employees of ESG working in multiple and specialized capacities.

ESG employees work with numerous subcontractors, both union and nonunion, to fulfill our obligations to the customer. ESG utilizes Small Diverse Business qualified local subcontractors as much as possible and relies on existing subcontractor relationships, where they have proven cost-effective and reliable. Some of these relationships are key partnerships in specific geographic areas or with respect to specific trades. ESG has a rigorous subcontractor pre-qualification process that not only verifies the subcontractor's financial strength, but also their overall safety record and ability to efficiently deliver on the overall energy project.

The primary lighting, building envelope, and mechanical subcontractor we have selected for the Pennsylvania Small GESA-4 DCNR project is Global Energy Services (GES). GES has an excellent track record of providing multiple services for previous ESG Pennsylvania GESA projects, including the aforementioned SCI Dallas Large GESA Project. GES is also a certified Small Diverse Business (SDB) in the Commonwealth of Pennsylvania. ESG has implemented well over 30 energy projects within the past five years in partnership with GES. Each project has been completed on time and each one is yielding better-than-expected energy savings.

Our overarching goal is to select subcontractors that allow us to continually bring our projects to close on time or ahead of schedule, and within the projected energy savings commitment. ESG takes our selection process for subcontractors very seriously. Our subcontractors are an extension of our own workforce and share our commitment to exceed our customer's expectations.

[1] General Manager, Sales Manager, Engineering Manager, Operation Manager, Account Executives, Project Managers, Construction Managers, Energy Engineers, Mechanical Engineers, Electrical Engineers, Controls Engineers, Safety Managers, Commissioning Agents and Measurement & Verification Managers.

©2017 Energy Systems Group, LLC

2.2-2 Work Plan for This Project

Sites Visited
The ESG Team has toured **all** the DCNR sites listed within the RFP (see table below), as well as two additional DCNR sites within the region that are not listed in the RFP. The DCNR Region 2 Headquarters Office at Moraine State Park and the Regional Forestry Office Clarion were both included in our site visits and our proposal.

	Facility	Location
1.	Region 2 Regional Forestry Office	Clarion, PA
2.	Forest District #4	Laughlintown, PA
3.	Forest District #6 (2 maint. Garages only)	Ebensburg, PA
4.	Forest District #8	Sigel, PA
5.	Forest District #14	Warren, PA
6.	DCNR Region 2 Regional Office	Prospect, PA
7.	Clear Creek State Park	Sigel, PA
8.	Cooks Forest PA	Leeper, PA
9.	Jennings Environmental Education Center	Prospect, PA
10.	Keystone State Park	Derry, PA
11.	Kooser State Park	Somerset, PA
12.	Laurel Hill State Park	Somerset, PA
13.	Laurel Ridge State Park	Rockwood, PA
14.	Linn Run State Park	Rector, PA
15.	Maurice K. Goddard State Park	Sandy Lake, PA
16.	McConnells Mill State Park	Portersville, PA
17.	Moraine State Park	Prospect, PA
18.	Ohiopyle State Park	Ohiopyle, PA
19.	Oil Creek State Park	Oil Creek, PA
20.	Point State Park	Pittsburgh, PA
21.	Presque Isle State Park	Erie, PA
22.	Pymatuning State Park	Jamestown, PA
23.	Raccoon Creek State Park	Hookstown, PA
24.	Ryerson Station State Park	Graysville, PA
25.	Yellow Creek State Park	Penn Run, PA

©2017 Energy Systems Group, LLC

a. Proposal contains detailed description of how ESG will coordinate with DGS and Funding Agency

ESG understands the importance of good communication within and between all parties involved in this project. ESG will prepare design documents for agreed-upon energy conservation measures requiring design and engineering. Upon receiving the notice to proceed (NTP), ESG will present 30% submittals to DGS and DCNR for their review and acceptance, if required.. Once the 30% submittals are approved and accepted by DCNR and DGS, ESG will create the 100% final design documents for another review by all stakeholders, if required. All fixtures, materials, and equipment will be ordered following the approval by DGS and DCNR. ESG will also prepare weekly meeting minutes to document, communicate, and coordinate with main points of contact at DGS, DCNR and the assigned ESG project team. ESG will utilize our look ahead schedule process, which defines forecasted work and documents important milestone dates for all selected energy conservation measures (ECMs). ESG will not only be coordinating with DGS and DCNR management contacts, but will also collaborate with all DCNR site managers at remote locations throughout Western Pennsylvania. During our preliminary assessments, Park Managers requested that we keep them apprised of all project requirements, should ESG be selected as the ESCO of choice. Their interest and willingness to work in tandem with us is encouraging and certainly welcome.

b. Proposal demonstrates a thorough understanding of the design process and how ESG will coordinate with retained professional

ESG has assembled a seasoned team of engineering professionals on its staff. Thus, we do not need to hire retained professionals for this project. ESG is particularly familiar with the DGS GESA design process, most recently demonstrated in our delivery of the large GESA project at SCI Dallas. In addition to recent GESA experience, our engineers and project managers hold technical and engineering degrees from accredited engineering colleges, CEM, LEED AP, and PMP certifications, and most are licensed professional engineers. ESG's technical and engineering professionals, with the assistance of the management team, will work to provide the appropriate design and engineering services in accordance with DGS design manual guidelines.

c. Proposal demonstrates thorough understanding of design process on small GESA design projects using DGS Procedure Manual

ESG has read the requirements of the small GESA design process and recognize them as very similar to the large GESA design process we previously implemented. The notable difference is that DGS and DCNR will not have a state contracted energy engineering consultant as part of the small GESA and all design approvals will go directly to DGS and DCNR for their approval.

d. Proposal identifies design issues and describes how ESG will manage and execute the project

ESG is proposing the implementation of field-tested and proven ECMs for the Small GESA-4 DCNR project that will recover valuable financial resources by reducing overall energy costs. In accordance with the 10-year simple payback requirement under the Small GESA program, we anticipate providing LED lighting conversions, particularly building envelope upgrades, and hot water system upgrades. The design aspects of these particular ECMs are not complex and ESG has vast experience implementing these measures. ESG recognizes that successful design consists of proven engineering practices coupled with a comprehensive onsite audit of existing building components, review maintenance concerns or problems and operating conditions. ESG will provide solutions (i.e. ECMs) that are most suitable to the building type and the operational environment to maximize energy savings return. ESG's commitment with providing appropriate resources and expertise ensures that the proposed ECMs are developed and implemented to achieve and yield the savings denoted within the Comprehensive Energy Audit (CEA).

©2017 Energy Systems Group, LLC

A project with this many individual locations requires a customized approach in order to implement the project successfully. ESG's approach will be to have multiple crews responsible for lighting, building envelope, and mechanical upgrades. The roving crews will start at the northernmost DCNR site (Presque Isle State Park) and proceed southward, completing work at one DCNR location before moving on to the next closest location, until all DCNR Region 2 facilities have been upgraded with the ECMs identified in our contract. ESG has made arrangements with our material suppliers to have direct-drop delivery points throughout Region 2. This eliminates the costly expense of transporting materials from one central location to all other locations within the region.

e. Proposal thoroughly describes construction challenges and proposed solutions.

The challenge, while working with multiple DCNR locations spread over a vast area, will be the coordination of installation teams and logistics concerning material drops, material laydown areas, local accommodations and timing. To overcome this challenge, ESG has an experienced team who implemented other projects with the same requirements. We also have preferred suppliers positioned throughout Pennsylvania who can provide multiple material drop locations matching our team's needs and schedule. Our team has also spoken to various DCNR personnel during our initial site visits and has determined ideal material laydown areas at a majority of the DCNR facilities.

There are additional challenges that will require ESG to work very closely with the DCNR representative at each site: seasonal weather, remote locations, occupancy of specific buildings, site security, and light levels for security during afterhours. Our solution is to work closely with the main point of contact at each facility and review the proposed ECM scopes of work prior to implementation. ESG will work with DCNR's representatives to understand the operational procedures of each facility and develop an accurate schedule to fully abide to these requirements. A pre-construction meeting or conference call will be scheduled to determine the particulars of the timeline for the initial site coordination, date of the kick off and safety audit meetings, and the start and completion dates. The conference call will also determine dates of inspection and a forecast of the final acceptance timeline. ESG will maintain and distribute weekly schedule updates for tracking implementation progress and confirming future timelines and/or durations with proposed phases of each ECM at each DCNR site. We propose to manage the project by working with one primary subcontractor and performing weekly monitoring inspections during the duration of the project. Weekly implementation reports will be distributed and ESG will also provide a monthly Executive Project Report with each payment application submission.

f. Proposal thoroughly describes a construction plan, including site operations, logistics, lay down areas and a detailed discussion about how to execute a project in a downtown area

For this project, there are only two DCNR facilities located in downtown areas, Point State Park and the Regional Forestry Office. We do not foresee any issues working in these downtown environments.

ESG will conduct weekly progress meetings with the DCNR representatives at each site to review logistics and parameters with scheduling and performing installation phases of work. ESG will also review and define the scopes of work to be executed each week and confirm coordination issues or concerns with scheduled and/or completed work. ESG will then prepare meeting minutes and forecasted look ahead schedules for each weekly progress meeting. These documents will be distributed to DCNR and all representatives assigned to the project. ESG will also administrate required inspections and provide monthly documentation in accordance with administration procedures as directed by the Commonwealth of PA and DCNR.

ESG shall utilize offsite staging areas located throughout Region 2 to store the direct drop materials required for this project. Materials and equipment will be transported each working day and shall be stored within a defined and agreed upon location within a given building.

©2017 Energy Systems Group, LLC

While touring Point State Park our team discussed with Park Manager, Jake Weiland, and Maintenance Supervisor Andy Pelesky, where we could park vehicles and potentially lay down materials. We also discussed security and safety concerns and came to a mutual agreement as to what would be expected when we perform work at that particular park. The Regional Forestry Office in Clarion has ample room for contractor parking and space for a lay down area and minimal vehicle traffic.

g. Proposal demonstrates thorough understanding of scheduling and construction practices using DGS general conditions and administrative procedures

The ESG management and delivery teams have read and understand the Small GESA general conditions in Appendix H of the RFP and has paid very close attention to Article 5, Article 6, and Article 7. Our team, including our key subcontractors have also read over the administrative procedures and understand them as well. Our primary subcontractor, Global Energy Services (GES) has also worked on several PA GESA projects and is very familiar with the GESA procedures. GES provides a second layer of experience in this regard.

h. Proposal describes project safety plan and monitoring

Safety is the most important aspect of our business!

ESG's safety management program is supported by corporate management, administered by the company's project management team, and monitored by ESG's Corporate Safety Department. ESG will provide a safe work environment for our employees, subcontractors, and our customer's employees and visitors by incorporating safety into the planning, construction, and maintenance of the project site and equipment, and complying with applicable rules and regulations relating to federal, state, customer policies and ESG requirements.

Our Corporate Safety Department is authorized to provide training in 29 CFR 1926 OSHA construction industry regulations and 29 CFR 1910 OSHA general industry regulations to ESG employees. Project Delivery Team members are required to obtain at least a 10-hour OSHA outreach training course every 3-5 years, and participate in applicable job related safety training. The Corporate Safety Department oversees the Corporate Safety Program and policies. It also disseminates pertinent safety information to the project management team to keep a focus on safety. The department visits project sites periodically to provide guidance to project teams and subcontractors relative to potential hazards, education and training, and compliance with the applicable 29 CFR OSHA industry regulation.

Prior to a project starting, the Corporate Safety Department reviews subcontractor safety information and communicates the findings to the project team. The information reviewed includes, but is not limited to, Subcontractor Worker's Compensation Experience Modification Rate (EMR), OSHA Recordable Incident Rate, OSHA activity history, On-site Safety Meetings, and their Safety Program.

ESG Safety Record

Year	2016	2015	2014	2013
EMR Rate	0.66	0.66	0.67	0.71
Incident(s)	0	1	1	4
Lost Time Incident(s)	0	0	0	0
RIR Rate	0	0.37	0.42	1.83

©2017 Energy Systems Group, LLC

Experience Modification Rating compares worker's compensation claims experience to other companies similar in size who operate in the same industry. Most employers who have annual premiums in excess of $3,000 receive an Experience Modification Rate. Companies at the industry average have an EMR of 1.0. For companies better than industry average it is below 1.0.

ESG dedicates substantial effort to promoting safety awareness and accident prevention. Our safety program is characterized by sound management decisions, and the cooperation and support from all of our employees, subcontractors, and customers.

i. Proposal describes an effective quality control plan

The ESG Project Manager will have the following responsibilities with respect to quality control (QC):

- Ensure work is performed in compliance with savings plan, contract requirements, code requirements, and construction industry standards.
- Ensure that work is performed in accordance with facility, DGS, and ESG standards.
- Manage and coordinate QC activities, submittals, tests, samples, as-builts, and results.
- Ensure that periodic (weekly or bi-weekly) project briefings are held to discuss safety, security, quality, progress, and performance.
- Ensure that drawings are kept up to date with the proper revisions, and provided to the contractor.
- Inspect equipment to be installed and reject equipment if determined to be non-compliant with specifications or damaged during transportation or storage.
- Coordinate commissioning activities among ESG engineering team, DGS, DCNR, and Global Energy Services (GES).
- Investigate and resolve warranty problems and indicate the action taken on warranty reports.

©2017 Energy Systems Group, LLC

j. Proposal clearly describes Proposer's methodology for commissioning this project

For the proposed scope of work, the major objectives for implementing a commissioning process will be to:

- Ensure total system operation and functionality
- Optimize energy use in line with the ECM intent
- Lower operation and maintenance costs
- Extend life of assets
- Reduce asset life-cycle costs
- Improve indoor comfort

Commissioning takes place in five (5) phases: ECM development, design, construction, acceptance, and post acceptance. Due to the page limitations of this RFP response, we are providing a brief overview of the commissioning process. A detailed, system-specific commission plan will be included in the Comprehensive Energy Audit (CEA) and the design phase. ESG's commissioning steps throughout all five phases include Operational Acceptance Testing (OAT) and Functional Acceptance Testing (FAT). The primary goal of OAT and FAT is to optimize equipment operations and maximize the benefits.

The benefits of commissioning for this project include:

- ✓ *Strict adherence to owner design intent;*
- ✓ *Improved energy efficiency;*
- ✓ *Functional and reliable equipment operation;*
- ✓ *Reduced operation and maintenance costs;*
- ✓ *Improved indoor environmental quality and occupant comfort;*
- ✓ *Comprehensive training for operations and maintenance personnel;*
- ✓ *Integration of complex building systems; and,*
- ✓ *Consistency through design, construction and turnover.*

k. Proposal describes training of Funding Agency personnel, manuals, occupancy permits, commissioning and final close-out approach

ESG proposes training and monitoring as an integral part of this GESA project. An investment in continued technical training of the existing staff with respect to the utilization of the proposed systems in combination with continued systems monitoring will contribute to the proficiency of the staff and provide the required level of efficiencies designed in our solutions.

Technical support and flexibility are key ingredients for ESG's support services plan. Based on our assessment of the facilities, ESG's energy engineers and trainers will provide maintenance and operational training for the proposed building systems, LED lighting, Hot Water Systems, HVAC equipment, and other identified equipment. ESG will design and perform training programs (customized and based upon the expertise level of the DCNR staff) required to ensure proper maintenance of the installed equipment.

The training program will include skills development and knowledge transfer. The training curriculum will reflect skills required to perform the required maintenance and operations functions, and what specialized tools and/or instrumentation will be necessary.

Providing updated and comprehensive operations and maintenance (O&M) manuals is an important element of the project's success. The O&M manuals will be used during staff training sessions to address any questions and to reinforce their importance. ESG will provide copies of applicable operations and maintenance material for equipment in each building. Existing O&M material will then be combined with information for all new systems to create a master O&M manual. For the proposed scope of work, this will contain a summary of all equipment and systems within the facility, and will reference where to find additional information (if required) from the drawings and technical manuals.

©2017 Energy Systems Group, LLC

The master O & M manual will be used to help the on-site staff maintain equipment operations at a level that will ensure optimal energy efficiency.

Occupancy permits will be reviewed and issued in accordance with PA State guidelines.

l. Proposal clearly describes Proposer's methodology for creating the appropriate Measurement and Verification Plan

Measurement and Verification (M&V) is a vital component of any energy performance contract. ESG's M&V personnel will be involved with the project from conception to commissioning, and in every year of the contract term. M&V personnel are critical during the development phase to establish the most appropriate and cost effective M&V protocol. They play a crucial role in establishing corresponding plans and ensuring that post installation measurements are performed according to the chosen M&V protocol. Additionally, they ensure proper documentation and analysis of the measurements are performed. The Lead Engineer will serve as the contact point for M&V information and will utilize ESG's M&V resources to provide documentation that the installed systems are performing at or above the guaranteed levels. ESG's M&V team members have many years of M&V experience with applicable International Performance Measurement and Verification Protocol (IPMVP) standards.

ESG's core competencies and focus are on providing our customers with "Building Upgrades That Pay for Themselves." A key activity of our partnership with our customers is the measurement and verification of savings results. Our customers have always received timely, accurate, and easy to understand documentation of the savings results.

2010 IPMVP M&V Options

M&V OPTION	PERFORMANCE AND OPERATIONAL FACTORS	SAVINGS CALCULATIONS
Option A **Stipulated and measured factors**	Based on a combination of measured and stipulated factors. Measurements are spot or short term taken at the component or system level. The stipulated factor is supported by historical or manufacturer's data.	Engineering calculations, component or system models.
Option B **Measured factors**	Based on spot or short-term measurements taken at the component or system level when variations in factors are not expected. Based on continuous measurements taken at the component or system level when variations are expected.	Engineering calculations, component or system models.
Option C **Utility billing data analysis**	Based on long-term, whole-building utility meter, facility level, or sub-meter data.	Based on regression analysis of utility billing meter data.
Option D **Calibrated computer simulation**	Computer simulation inputs may be based on several of the following: engineering estimates; spot, short-, or long-term measurements of system components; and, long-term, whole-building utility meter data.	Based on computer simulation model calibrated with whole-building and end-use data.

©2017 Energy Systems Group, LLC

COMPLIANCE WITH CUSTOMER REQUIREMENTS

ESG will work with DCNR to define a customized approach for M&V that best reflects the goals of the project, is accurate, is fair to both parties, and is helpful in maximizing savings results for the term of this performance contract.

ADJUSTMENT FOR SHORTFALLS AND WINDFALLS

All savings above the project guarantee amount are entirely DCNRs to keep. Each year's annual savings must meet/exceed DCNRs debt service payments for that year. ESG will compensate and refund the full amount of any shortfall in the savings guaranteed, based on results of the annual energy audit, should savings not meet or exceed the guarantee.

Savings results for ESG customers have an average positive deviation of more than 10%, which clearly demonstrates our ability to accurately project and achieve the guaranteed savings.

REGULAR INTERVAL POST-INSTALLATION VERIFICATION

At regular intervals, ESG will verify that the installed equipment or systems have been properly maintained and are operating correctly. Although annual reports are required for establishing savings guarantees, reports will be prepared no less than semi-annually to ensure systems are working properly, allowing for fine-tuning of measures throughout the year based on operational feedback, depending upon customer preference for frequency.

BASELINE DEVELOPMENT

The core of all M&V is the appropriate development of the baseline. For this response, we have used the baseline data provided to us. However, upon selection, ESG will first begin a detailed review of utility bill data for the most recent three to four years of data.

MEASUREMENT AND VERIFICATION OPTIONS

M&V guidelines are grouped into four categories: Options A, B, C and D, as shown in the table on the preceding page. Having four options provides a range of approaches to determine energy savings with varying levels of uncertainty, costs, and methodology. A particular M&V option is chosen based on the complexity of the ECM while minimizing the risk of savings being achieved and keeping in mind the potential for operational changes between the baseline and the performance periods.

After the ECM or system is installed, energy savings are determined at a single occurrence, continuously or at regular intervals, as outlined in the contract. The savings calculation approach is generally dependent on the M&V option and method selected for the ECM. In some instances, a combined M&V option approach is best suited for the ECM. For example, for a building with multiple ECMs, a combination of Option A and Option B may be used for different ECMs.

Numerous factors can affect energy savings during the term of a contract. These factors include weather, occupancy, operating hours, equipment schedules, equipment maintenance, and equipment loads. How adjustments are made to the baseline if post-installation conditions are different than baseline conditions are dependent upon the M&V method option being implemented.

ESG Suggests Multiple M&V Options

Relative to the PA Small GESA 4 for DCNR, since the majority of energy conservation measures (ECMs) recommended for DCNR are proven technology and simplistic in nature, ESG proposes that **Option A** be utilized as the M&V plan for this project. Option C would be too costly for the ongoing M&V because there are multiple DCNR sites spread across hundreds of miles in Western Pennsylvania and numerous utility accounts to track the

©2017 Energy Systems Group, LLC

savings**. Option A will cost much less to implement, while still providing accurate savings projections and may also allow for more energy work to be included in the project.**

CONTINUOUS IMPROVEMENT

As part of this scope of services, ESG will constantly seek out the best ideas to further add value and effectiveness to our services and establish new levels of efficiency in the customer's facilities. ESG will work with DCNR to customize an M&V program that is the most economical while providing the best results to validate actual energy savings.

ENSURING LONG-TERM SAVINGS RESULTS

A proper operations and maintenance (O&M) plan is very important to sustaining long-term energy savings. ESG is exceeding our guaranteed savings results at each of our projects due in part to the job that our customer's in-house facilities personnel are doing to maintain and operate key energy-consuming systems. ESG is capable of providing consultative advice, as a minimum, or assuming total responsibility for HVAC operations and maintenance, or anything in between. ESG will work closely with DCNR to evaluate and determine the appropriate maintenance plan as needed.

GUARANTEE/ EFFICIENCY ANALYSIS SERVICES

In order to maintain and increase the savings results throughout the term, ESG provides the technical expertise to keep energy consumption to its absolute minimum. This requires ongoing monitoring and fine-tuning of all equipment, analysis of monthly energy costs, analysis of preventive maintenance strategies/implementation and the ability to identify opportunities for additional energy savings. ESG, with its staff of Certified Energy Managers and Analysts, will work together with the customer's facilities staff to reduce the utility cost from the mechanical and electrical equipment in each building.

FORMAL REPORTS TO CUSTOMER

We typically provide an annual guarantee reconciliation report, and we can customize the frequency as needed by DGS and DCNR.

©2017 Energy Systems Group, LLC

2.2-3 Critical Path Schedule

a. Narrative clearly identifies and discusses critical aspects of schedule, associated risks and process to ensure achievement of critical milestone dates.

The ESG project delivery team's approach and methodology is to control the project within the schedule by focusing on communication and teamwork within our projects. Our approach to constructions projects is not the typical "ground-up" approach. ESG is largely dependent on outdoor weather conditions and existing site location, and our process relies on our ability to gain access to buildings and equipment with minimal impact placed on the DCNR facilities. Some seasonal requirements will affect this project since the project involves occupancy in the spaces, and the installation of heating and cooling equipment. We are cognizant that DCNR must be able to operate their buildings and conduct business with minimal disruptions throughout the entire construction phase. Effective communication between ESG, DGS, and DCNR is critical and is the basis of seamless implementation.

As with any construction schedule, two of the most common risks are (1) failure to receive materials in a timely fashion, and (2) tasks that run over on time allocations. ESG can overcome these by (1) managing the project correctly by ensuring that materials are ordered well ahead of time, and (2) the time allotted to perform certain tasks is reasonable. A third risk is that unexpected circumstances that preclude our efforts to remain on schedule. No one can easily prepare for unexpected circumstances or acts of nature, however our ability to get back on track in similar circumstances has been stellar on previous projects.

ESG also has an excellent track record of creating and maintaining project schedules for various types of facilities. We focus on both understanding how we are impacting the client's working environment, and completing tasks within the timeframe of the construction period. ESG prides itself on being flexible and innovative to mitigate issues that could potentially impact project completion. Proper schedule management is the practice of our highly capable Project Manager who is focused on the following aspects during the development phase of the project:

- Clear and well-documented communication with the client and their goals and objectives.
- Partnering with the client to resolve issues expeditiously to maintain progress on the project.
- Careful planning—Since we are impacting the environment of employees and the public, ESG will aid in notifying all affected persons and will be eager to evaluate feedback and make any adjustments necessary to minimize disruptions. Some tasks on the proposed schedule can accommodate specific timelines in an effort to minimize occupant disturbances (nights, weekdays, off-peak hours).
- Flexibility in the schedule—We are prepared to encounter unexpected issues that may arise, for example, a client request that changes the scope, change of building use, change in future plans for the building. In every case, ESG has been able to work with the client to understand the issues and resolve them while proactively managing the schedule.

ESG's look ahead schedules are developed and administrated to assure specified milestone dates reflected in the CPM are either achieved or sustained with completing phases of work as required by DGS and DCNR. The CPM schedule will be updated at the end of each month and distributed to the project team.

Sections b. and c. are included in the Schedule-Critical Path Map (CPM)

©2017 Energy Systems Group, LLC

2.2-4 Qualifications, Experience and Past Performance

a. Proposal clearly explains the qualifications and experience of all core members, including project specific roles and not generalized work performed on projects.

QUALIFICATIONS AND EXPERIENCE BY TEAM MEMBER

Tony Prelec *Role-Account Executive*	Education: Parkway Technical College, Darden School of Business. Project Development: 25 years. Energy Savings Projects Development: 12 years. Total value of projects: $104M.
Andrew Miller *Role-General Manager*	Education: Towson State University School of Business. Project Experience: 33 years. Energy Savings Projects Development: 17 years. Total value of projects: $300M+.
David Ames *Role-Sales Manager*	Education: Virginia Military Institute and University of Richmond. Energy Savings Projects Development: 30+ years. Total value of projects: $116M+.
Mahesh Bala *Role-Engineering Manager*	Education: Virginia Tech, Ph.D. in Mechanical Engineering. Engineering experience: 30 years. Energy Savings Projects Development: 20 years. Total value of projects: $300M+.
Stephen Richmond *Role-Regional Operations Manager*	Education: Kean University, BS in Industrial Technology and specialization in Mechanical Contracting. Energy/mechanical/electrical construction: 30 years. Energy Savings Projects implemented: 100+.
Michael Lowery *Role- Lead Performance Engineer*	Education: Virginia Tech. Energy Savings Projects Development: 8 years. Total value of projects: $50M.
Dan Khuu *Role- Secondary Performance Engineer*	Education: Rochester Institute of Technology, Mechanical/Energy Engineering. Energy Performance Contracting: 25 years, Total value of projects: $200M.
Karthik Dandu *Role-Performance Engineer*	Education: West Virginia University, MA Mechanical Engineering. Engineering consulting and performance contracting: 5 years. Total value of projects: $40M.
Scott Gracely *Role-Project Manager*	Education: California University of Pennsylvania. Construction management experience: 33 years. Energy Savings Projects Development: 9 years. Total value of projects: $250M.

©2017 Energy Systems Group, LLC

Ken Stanley *Construction Manager*	Education: Community College of the U. S. Air Force towards Associates in Applied Science in Aerospace Ground Equipment Technology. Energy related experience: 35 years.
Donna Wicks *Measurement & Verification Manager*	Education: University of Southern Indiana and Indiana University. Measurement & Verification of Energy Savings Projects: 19 years.

PA SMALL GESA 4 DCNR-PROJECT SPECIFIC ROLES OF EACH TEAM MEMBER AND DESCRIPTION OF THEIR INVOLVEMENT

Tony Prelec *Role-Account Executive*	Client liaison, procurement, IGA work reviewer and post construction support.
Andrew Miller *Role-General Manager*	Procurement, financing, contracting.
David Ames *Role-Sales Manager*	Procurement, financing, contracting.
Mahesh Bala *Role-Engineering Manager*	Engineering work assignment and management during IGA and other project phases, and procurement.
Stephen Richmond *Role-Regional Operations Manager*	Overall project management responsibilities, construction management, commissioning and project turnover.
Michael Lowery, Karthik Dandu, Dan Khuu *Role-Performance Engineers*	IGA work, commissioning and diagnostic testing, design and review, Measurement & Verification and warranty services.
Scott Gracely *Role-Project Manager*	IGA work, procurement, construction management, training, post-construction support and warranty services.
Ken Stanley *Role-Construction Manager*	Procurement, construction management, training, post-construction support and warranty services.
Donna Wicks *Role-Measurement & Verification Manager*	Responsible for final development of Measurement & Verification plan and complete implementation of the plan for the duration of the project.

©2017 Energy Systems Group, LLC

b. Proposal provides a detailed explanation of qualifications and experience for core team members on LED conversions and HVAC controls.

ESG CONSTRUCTION TEAM MEMBERS LED CONVERSIONS AND HVAC CONTROLS QUALIFICATIONS AND EXPERIENCE

Stephen Richmond *Regional Operations Manager*	Over 30 years of HVAC experience. Worked through college as a sheetmetal / HVAC mechanic. Ten years of estimating and project management experience in the mechanical contracting industry. Over 20 years ESCO industry mechanical systems with extensive building automation (controls) expertise. Every project installed for the last 5 years has been LED.
Scott Gracely *Project Manager*	Over the 9 years, developed and implemented over $100M in a variety of Lighting Upgrade (LED) and HVAC Improvement (controls) projects. Worked within the Mid-Atlantic region and has experience with Federal, State and Local Governments, Healthcare, K12 and University energy savings projects.
Ken Stanley *Construction Manager*	Over 11 years LED conversion experience for $60M in energy related projects and 30 years HVAC Controls experience spread over $100M in construction projects.
Michael Lowery *Performance Engineer*	Developed over $15M in Energy Projects where LED lighting technologies were implemented. Spent 8 years designing and implementing building automation (controls) systems for various HVAC systems as well as developed over $60M in Energy Projects where HVAC systems were modified to more efficient standards.
Karthik Dandu *Performance Engineer*	In the past 4+ years, developed over $10M in Energy Projects where LED lighting technologies were implemented. Spent 5 years designing and upgrading HVAC systems (controls) in various K-12, Federal and State projects across the Country.
Dan Khuu *Sr. Performance Engineer*	Developed over $200M in Energy Projects in the last 25 years. $120M of those projects included LED lighting design, HVAC Controls and Energy Management System (EMS) control design. This experience, combined with multiple professional certifications, ensures a successful installation for DGS and DCNR projects relative to LED and HVAC controls applications.

©2017 Energy Systems Group, LLC

Matt Saboy *GES Vice President*	Over 13 years experience in auditing, designing and implementing over $80M in lighting for Guaranteed Energy Performance projects that included all types of lighting technologies. For the past 6 years, main focus has been on LED's lighting designs (Conversions from fluorescent systems). Graduate of several LED manufacturers design courses including Sylvania, GE, Cooper, and Acuity. Experience in re-designing existing lighting to LED lighting in multiple facility types ranging from state/federal/local prisons and municipalities, universities, hospitals, schools, private and government offices, manufacturing, and secure military and federal complexes.

c. Proposal clearly identifies the Retained Professional's individual core personnel and clearly establishes the Retained Professional's energy projects involving LED conversion.

ESG will self-perform the work of the retained professional and this work will be specifically managed by the team listed in detail in the two previous sections. Since ESG directly hires our professionals, rather than temporarily hiring retained professionals, we have fulfilled the obligation in previous sections explaining our professionals experience with energy projects containing LED conversions.

d. Proposal demonstrates the Retained Professional's readiness and commitment of personnel.

ESG directly hires professional engineers, project managers, construction managers and account managers. Therefore, we seldom have a need to temporarily hire retained professionals. ESG fully intends to utilize its fulltime and directly-employed professionals to implement this PA Small GESA project. ESG has the staff on hand to begin the Investment Grade Audit (IGA) and ultimately the construction as soon as the Notice to Proceed is issued.

e. Proposal clearly established Subcontractor's ability to complete Small GESA projects since 2010 with the team identified in the proposal.

Global Energy Services (GES) is a seasoned industry leader. Since 2009, it has been serving customers throughout North America, including Fortune 500, government, healthcare and educational institutions. GES has designed and installed over 1 million fixtures to date, including LED technology. The foundation of GES is based on 100% customer satisfaction and end to end project management accountability. They are fully licensed, bonded, and insured, as well as permitted in all 50 states. Certifications include: SDB Pennsylvania Certification #348437-2013-01-SB-WBE, MBE/DBE Maryland, SWaM Virginia, OMWBE Delaware, MBE/WBE New Jersey, and they are registered in the Central Contractor Registration (CCR) System. As you will see in the next section, GES has completed several Guaranteed Energy Savings Agreement (GESA) projects in Pennsylvania listed under their qualification.

©2017 Energy Systems Group, LLC

f. Subcontractor's Qualification demonstrates readiness and commitment of personnel.

Global Energy Services Statement of Readiness

GES is completely ready to commit to the services required for this unique project. GES has over 80 employees including installers, engineers, and project managers. We have the capacity and ability to complete the IGA, design, and installation process needed to deliver this project efficiently from start to finish on the following ECM's: Lighting, Building Envelope and Water Conservation. GES plans to implement small teams of installers with vans to drive with materials needed from the various park locations. Since the project consists of a number of small buildings that are vastly located throughout the parks, the mobility of smaller teams will allow us the ability to maximize efficiency throughout the project.

Global Energy Services Qualifications

Global Energy Services is a national full service turn-key energy savings company that specializes in lighting retrofits, controls & design, water conservation and building envelope. Global Energy Services is a seasoned industry leader with over 100 years combined experience and expertise within our auditing and engineering staff and over 60 installers working in the field. We are currently serving customers throughout North America. We have experience dealing with Fortune 500 companies, Federal & Local Government Agencies, Healthcare facilities, schools, Universities, Municipalities and Correctional Institutions.

(GES Qualifications continued next page.)

©2017 Energy Systems Group, LLC

(GES Qualifications continued.)

The following is a list of projects that Global Energy Services has implemented for PA GESA and other Performance Contracts:

Project Name	Owner/Performance Contract/Yrs	Owner Contact	State	GES Scope Totals
SCI Dallas	**GESA / 2015-2016**	**Mike Truchon –Facility Director**	**PA**	**$1,100,000**
Description of Work: This project is a Pennsylvania State Correctional Institute – This was a complete LED lighting retrofit and/or new fixture replacement throughout the prisons interior and exterior lighting. Special attention was made to the lighting levels due to security risk. Special photometric layouts completed for the exterior complex. This Project complete success, reducing the lighting consumption by 50%.				
City of Ocean City, MD	**Energy Systems Group / 2016**	**Terry McGean – City Engineer**	**MD**	**$1,684,994**
Description of Work: 18 buildings plus street lighting: This project is a performance contract – This was a complete LED lighting retrofit and/or new fixture replacement in conjunction with the Building Envelope improvements throughout 18 different building's (interior and exterior lighting). This project also included all city owned parking, street lighting and boardwalk lighting. Special attention was made to the lighting levels on the streets and boardwalks as well as properly directing the light so not to disturb marine life on the beach.				
HDC – Strawberry Square	**Siemens - 2015**		**PA**	**$3,128,179**
Description of Work: 3 buildings: This project is a performance contract – This was a complete custom design LED lighting retrofit and/or new fixture replacement & occupancy controls throughout 3 large office buildings and shopping mall (interior and exterior lighting). A large percentage of tenant space is occupied by Pennsylvania state agencies. Project was complete in 2015.				
PA State Police HQ	**JCI - 2017**		**PA**	**$202,502**
Description of Work: This project is a performance contract – The project consists of lighting controls, and some LED lighting retrofit interior and exterior lighting in selected locations. The water conservation portion of the project included 1.28GPF toilets, .126 GPF urinals, .5GPM aerators and 1.5 GPM shower heads throughout the facility.				
Delaware Army Natl Guard	**Siemens – 2017**		**DE**	**$569,726**
Description of Work: This project is a performance contract – The project consists of lighting controls, and LED lighting retrofit and new fixtures for the interior spaces.				
VA State Police	**Trane – 2016**		**DE**	**$819,424**
Description of Work: This project is a performance contract – The project consists of lighting controls, and LED lighting retrofit and new fixtures for the interior and exterior lighting for multiple locations across the state.				

©2017 Energy Systems Group, LLC

TABLE OF CONTENTS

2.3 Energy Conservation Measure/Cost Submittal

2.3-1 Energy Conservation Measures

- **a.** Every ECM described in Appendix document is either calculated into the project scope or the Proposer set forth a detailed justification for exclusion of the ECM
- **b.** Proposal provides a preliminary assessment of the ECMs, including a detailed estimate of implementation costs and energy cost savings (including detailed calculations) for each ECM
- **c.** Proposal thoroughly demonstrates the technical feasibility, suitability, reasonableness, comprehensiveness and acceptability of the proposed ECMs, including the proposed equipment and level of quality of the equipment for the proposed savings
- **d.** Proposal includes additional ECMs not already included in the project

2.3-2 Energy Audit

- **a.** Proposal clearly and thoroughly describes the scope of the Energy Audit, including systems covered, personnel, methodology and schedule milestones
- **b.** Proposal thoroughly discusses how the Proposer's approach to the Energy Audit will comply with DGS' Energy Audit format
- **c.** Proposer clearly and thoroughly describes a reasonable and transparent approach to pricing the costs to prepare an Energy Audit for this project

2.3-3 Costs

- **a.** Degree to which the proposed energy analysis demonstrates sound engineering principles and the reasonableness of the proposed savings
- **b.** Proposer established a reasonable cost for preparing an Energy Audit for this scope of work in compliance with the methodology discussed in the Cost Submission.
- **c.** Proposal provides annual financial projections for the length of the contract and each projection appears in the proper format listed in the RFP

©2017 Energy Systems Group, LLC

2.3-4 Measurement and Verification

a. Degree to which the proposed Measurement & Verification (M&V) plan adheres to all M&V protocol standards and demonstrates scalability for measurement and verification of the proposed energy baseline, adjustment factors and energy cost savings

b. Proposal clearly and thoroughly describes a reasonable and transparent approach to pricing the costs to measure and verify the guaranteed savings for the entire duration of the project

c. Proposal clearly indicates the M&V pricing is premised upon design and construction in compliance with DGS' Design Manual and General Conditions and also in compliance with the International Performance Measurement and Verification Protocol (IPMVP)

d. Proposal thoroughly describes the methods, schedule, scope and personnel who will be performing the Measurement & Verification

APPENDIX

Energy Calculations
Lighting Line-by-Line
Weatherization Line-by-Line
Equipment Cut Sheets
ESG Financials – Electronic Copy (Back Cover Sleeve)

Cover image courtesy of Charlene Reinhart char@zbzoom.net

©2017 Energy Systems Group, LLC

2.3-1 Energy Conservation Measures

a. Confirmation of ECMs in the Appendix or Why They Were Excluded

ESG has addressed all of the core Energy Conservation Measures (ECMs) listed in the Appendix L of the RFP. Details involving these ECMs are discussed in the following section of this proposal.

b. Preliminary Assessment of ECMs Including Implementation Costs and Energy Savings

The table below identifies each ECM and breaks down the cost of each. Detailed energy calculations are located in the Appendix.

PENNSYLVANIA - SMALL GESA-4 DCNR

ECM	Annual Guaranteed Energy and Cost Savings and Project Costs Summary						
	Electric (kWh/yr)	Electric ($/yr)	Heating Fuel (kBTU/yr)	Heating Fuel ($/yr)	Total Savings ($/yr)	Implementation Cost	Simple Payback (years)
Building Weatherization and Insulation Improvements	70,725	$ 6,304	2,247,465	$ 32,699	**$39,003**	**$383,210**	**9.8**
Controls Upgrades	71,463	$ 6,189	474,269	$ 6,900	**$13,089**	**$35,851**	**2.7**
Install Instantaneous Hot Water Heaters	72,790	$ 6,304	210,600	$ 3,064	**$9,368**	**$321,314**	**34.3**
Lighting Upgrades	1,829,279	$ 170,840	0	$ -	**$170,840**	**$1,466,098**	**8.6**
TOTAL (For ECMs Listed Above)	**2,044,257**	**$189,636**	**2,932,335**	**$42,664**	**$232,299**	**$2,206,473**	**9.5**

c. Technical Feasibility and Suitability of ECMs

ESG has performed a study of the technical feasibility and suitability of Energy Conservation Measures (ECMs) which would provide energy and cost savings to the Department of Conservation and Natural Resources (DCNR) facilities. This report provides a detailed preliminary assessment of the feasibility and cost effectiveness of such measures and indicates the potential for their implementation. The information used to develop the ECMs was obtained through building surveys to collect equipment information, interviews with operators and end users, and an inspection of the systems at the sites. The information obtained includes nameplate data, equipment age, condition, design of the system, actual load, operational practices, schedules, operations, and maintenance history. We divided the measures into separate categories to match Appendix L, "Core Energy Conservation Measures" in the RFP. In addition, we added two categories to include (1) ESG recommended ECMs that address DCNR's current needs and are cost effective to the overall project; and, (2) ECMs that will be considered during the Investment Grade Audit (IGA).

CORE ENERGY CONSERVATION MEASURES INDICATED IN THE RFP

TOM RIDGE ENVIRONMENTAL CENTER (TREC)

1. Retrofit the building and parks lighting systems to LED.
   ESG recommends converting many of the existing lighting fixtures to LED. Detail regarding the proposed lighting fixture upgrades can be found later in this section.

©2017 Energy Systems Group, LLC

2. Correct the excessive negative pressure in the observation tower, eliminating or reducing the removal of treated air from within the TREC building.
   When the observation deck door is open, there is the potential for a negative pressure on the tower which could result in infiltration of conditioned air from the main building. The observation tower was designed to be isolated from the main building so there would be minimal infiltration from the main building when there is a negative pressure in the tower. However, if the doors from the TREC to the tower are left open, or, if there is a large enough negative pressure, then there is conditioned air infiltration. ESG recommends the reconfiguration of the existing dampers and exhaust fans in the observation tower to minimize conditioned air infiltration.
3. Repair/replace the failed fan powered reheat boxes located in the underfloor plenum.
   This repair would result in no energy savings benefit to DCNR and would not be a good fit under the PA Small GESA Program.
4. Determine the feasibility of adding individual private office temperature controls in lieu of shared controls.
   Adding controls to individual offices would require the installation of additional Variable Air Volume (VAV) boxes with reheat. This would require a significant redesign of the existing mechanical systems and would provide virtually no energy savings benefit to DCNR. ESG does not foresee a cost-effective solution for this type of conversion under the Small GESA Program.
5. Relocate thermostats located on outside walls to interior spaces. Utilize wireless devices where required.
   ESG has reviewed the drawings for the TREC and has identified the thermostats we can relocate from exterior walls to interior locations. Relocating these thermostats will eliminate the possibility of the thermostats not recording accurate temperatures of the spaces and reduce the heating and cooling demand on the AHUs.
6. Determine the existence of return air ductwork, and optimize the systems to provide outside air only when occupied and in amounts needed to satisfy ventilation requirements.
   There are currently energy recovery systems on the AHUs to recover energy from exhaust air for preconditioning the outside (ventilation) air. These systems are not capable of any further reduction in outside air based on their current design. Since there is already the capability for energy recovery, reducing the outside air flow would not yield appreciable energy savings. ESG will investigate ventilation air schedule in the building automation system during the IGA.
7. Evaluate the energy intensive lab equipment and determine if energy saving retrofits are possible. Consider flow control fume hoods.
   The lab equipment in use at TREC is designed for specific research and design purposes. The sensitive and specific nature of this equipment does not allow for any energy savings retrofits. ESG does not recommend including this work in the Small GESA due to a longer than 10-year Simple Payback.
   The fume hoods currently do not operate unless a user activates a switch to open the exhaust and make up air dampers when needed. Installation of variable flow control on the fume hoods would require the installation of VAV terminal boxes for the exhaust and makeup air and a redesign of the ductwork and mechanical systems. Further investigation of this ECM will be done during the IGA to determine the frequency and duration of usage accurately.
8. Repair or replace the heat recovery wheels and ensure they are operating as designed.
   At the time of the site survey, we discovered DCNR has already approved and funded a task order to repair the heat recovery wheels, thus we did not include it in our proposal.

©2017 Energy Systems Group, LLC

9. Replace the existing exterior central station air handling units that utilize boiler water with new gas-fired equipment and variable outside air controls. This will improve the operating efficiency and reduce piping loses.
   Based on the current condition of the existing central station air handlers, ESG does not recommend upgrade or replacement to other technologies. The elimination of the heat losses through the insulated piping is minimal and the replacement of the equipment will not satisfy the financial requirements of a Small GESA.
10. Implement occupied/unoccupied temperature control schedules and ensure the HVAC systems are controlled with setback temperatures and reduced outside air ventilation.
    During our site survey we noted that the unoccupied controls within the current building automation system are not set properly The existing building automation system manufactured by TRANE is capable of performing advanced occupied and temperature setback controls, however, the system needs to be configured properly and recommissioned. ESG will implement the appropriate occupied/unoccupied schedules as well as temperature setback controls. This will result in energy savings by allowing the equipment to maintain unoccupied space conditions.
11. Replace the existing boilers with new, high efficiency units. The units are problematic and are likely costing the facility excessive service repair and operating costs. If the AHUs are replaced with gas fired heater, downsize the boilers to provide only the required capacity for the load served.
    At the time of the site survey, we discovered that DCNR had already approved and funded a task order to replace the existing boilers, and thus have not included them in this proposal.

MAINTENANCE BUILDING

1. Replace lighting with LED.
   ESG recommends converting many of the existing lighting fixtures to LED. Detail regarding the proposed lighting fixture upgrades can be found later in this section.
2. Install a gas-fired radiant tube heating system or bio mass boiler to eliminate the unit heaters.
   ESG does not recommend the installation of radiant tube heating systems, as this upgrade will not fit into the financial requirements of the Small GESA Program.
3. Replace the existing boiler and heating controls with occupied/unoccupied schedules.
   The boiler will be too costly to replace under Small GESA program as the Simple Payback will be well above the 10-year limit. The installation of HVAC controls is detailed further down in this document, after the detailed lighting table.

PRESQUE ISLE PARK – GENERAL

1. Consider LED lighting retrofits to all building, structures, and exteriors where lighting is used on a regular schedule.
   ESG recommends converting many of the existing lighting fixtures to LED. Detail regarding the proposed lighting fixture upgrades can be found later in this section.
2. Evaluate the individual wastewater treatment plant energy use and operating costs and determine if enough savings exist to help pay for installing pump stations and piping to a central wastewater treatment plant.
   At the time of the site survey, Presque Isle had already decommissioned the wastewater treatment plant and connected it to the local municipal wastewater system.

©2017 Energy Systems Group, LLC

3. Evaluate the economic opportunity for wind power generation.
   Presque Isle already has a wind turbine installed at the Stull Interpretive Center. A recent storm has damaged the wind turbine beyond repair: high winds broke all three blades off of the turbine. Presque Isle would be a good location for more wind power generation, however this upgrade will not fit into the financial requirements of the Small GESA Program.

GENERAL ECMs FOR THE OTHER PARKS AND FORESTRY FACILITIES

1. LIGHTING AND LIGHTING CONTROLS
   Retrofit the buildings, parks forestry lighting systems to LED including lighting controls when applicable.
   ESG has include LED retrofits for all DCNR locations. LED technologies benefit DCNR facilities by reducing energy consumption used by lighting by as much as 50% and reduce peak demand. Lighting represents a major portion of DCNR's electricity use. In addition, lighting retrofit projects often improve the aesthetic appeal by providing brighter, whiter light and operating more quietly than older lighting systems, and maintenance costs are reduced due to the longer life of the LED equipment. Improvements to lighting will reduce electrical use, while meeting or exceeding existing light levels. The costs of material to maintain the current systems will also be reduced since these renovations replace items (i.e., lamps and ballasts) that are near the end of their life cycle with components capable of a significantly longer life cycle.

   Interior- The interior lighting design we propose for DCNR's park administrative buildings, such as park offices, marinas, maintenance buildings, and Bath Houses, consists predominantly of a 28 watt T8 to LED retrofit (with a small amount of 32 watt T8 and T12 to LED retrofits existing as well). Existing linear 4' T8/T12 fixtures are to be retrofitted from fluorescent lamps and electronic ballast, to Direct wire 12.5 watt LED T8 lamps. This system will eliminate the ballast and have the power run directly to the socket to power the LED lamps. This will result in a wattage reduction of approximately 50% and will eliminate the ballast as a maintenance concern.

   Incandescent and compact fluorescent light (CFL) screw-in fixtures make up a sizeable portion of the existing lighting system as well, especially in cabins. These fixtures will be re-lamped with new LED screw-in lamps that are a suitable replacement for the existing lamp wattage and the fixture/area application. These lamps will result in wattage reductions ranging from 23%-93% based on the existing technology being replaced. With a rated life of 1,500 hours for incandescent and 10,000 hours for CFL, the 25,000+ hour rated life of LED screw-in lamps will result in significant maintenance savings, too. CFL plug-in lamps will be replaced with LED plug-in lamps with similar energy and maintenance savings.

   Exterior -The existing exterior lighting system across all of the DCNR buildings are made up of HID lighting fixtures. These fixtures will be replaced with new LED fixtures that provide equal or better light levels, attractive return on investment (ROI), and maintenance reductions, while still providing high a quality product. Wattage reductions from these fixture replacements will range from roughly 50% to well over 70% across all fixture types. With rated life of 100,000+ hours compared to 10,000 hours of a HID lamp, these fixture replacements will see the most significant maintenance savings of any replacements or retrofits on the project. The color consistency and even distribution of light levels from LED compared to HID technology will also result in a much more secure and visually appealing environment for each exterior space.

©2017 Energy Systems Group, LLC

Lighting Occupancy Controls
ESG recommends the installation of occupancy sensors in public spaces throughout the buildings. During our walk-through, we noted the lighting in individual spaces was fairly well controlled, but that significant savings could be generated by controlling the lighting with occupancy sensors in the common areas. The ESG energy analysis team has developed an occupancy sensor program for this proposal based on "Dual Technology" sensors which sense both motion and sound. ESG provided a facilities lighting upgrade to LED designed according to the following criteria:

- ESG specified superior product to maximize energy savings reduce maintenance requirements and provide the greatest warranty.
- ESG specified superior product to maximize Utility Rebate Incentives and provide the greatest life expectancy.
- This is a complete LED upgrade, with an exception to some places which already have LED retrofits.
- Standardized products utilized wherever possible in order to reduce inventory and ongoing maintenance costs.
- RFP specifications: Lighting levels shall be: Illuminating Engineering Society (IES) recommendations as maximum; and, 80% of IES standards as minimum. New fixtures shall be Energy Star rated.

The table on the following pages is a summary of the existing lighting conditions and the proposed solutions. A detailed lighting list can be found in the Appendix.

LIGHTING SUMMARY BY LOCATION

PARK AND BUILDING	EST. QTY.	EXISTING CONDITION	PROPOSED UPGRADE
CLEAR CREEK			
PARK OFFICE	55+	Linear 4' T12 fixture	Direct wire LED tube retrofit
		Incandescent screw in fixture	LED screw in lamps
		LED fixtures	No upgrade
MAINTENANCE BUILDING	40+	Linear 4' T12 fixtures	Direct wire LED tube retrofit
		Incandescent and CFL screw in fixtures	LED screw in lamps
		LED fixtures	No upgrade
WATER TREATMENT BUILDING	6	Incandescent screw in fixtures	LED screw in lamps
RESTROOMS, SHOWER HOUSES AND BATH HOUSES	50+	Linear 4' T8 fixtures	Direct wire LED tube retrofit
		Incandescent and CFL screw in fixtures	LED screw in lamps
		LED fixtures	No upgrade
CABINS	90+	Linear 4' T12 fixtures	Direct wire LED tube retrofit
		Incandescent and CFL screw in fixtures	LED screw in lamps
		HID fixtures	New LED fixture/LED retrofit
COOK FOREST			

©2017 Energy Systems Group, LLC

PARK AND BUILDING	EST. QTY.	EXISTING CONDITION	PROPOSED UPGRADE
PARK OFFICE	40+	Linear 4' T12 fixtures	Direct wire LED tube retrofit
		Incandescent screw in fixtures	LED screw in lamps
WATER TREATMENT BUILDING	6	Incandescent screw in fixtures	LED screw in lamps
COOKS INN	80+	Linear 4' T12 fixtures	Direct wire LED tube retrofit
		Incandescent screw in fixtures	LED screw in lamps
BATH HOUSE	20+	Linear 4' T12 and T8 fixtures	Direct wire LED tube retrofit
		Incandescent and CFL screw in fixtures	LED screw in lamps
CABINS	60+	CFL screw in fixtures	LED screw in lamps
JENNINGS ENVIRONMENTAL CENTER			
ENVIRONMENTAL CENTER	100+	Linear 2' and 4' T12 fixtures	Direct wire LED tube retrofit
		Incandescent screw in fixtures	LED screw in lamps
		LED fixtures	No upgrade
KEYSTONE			
VISITOR CENTER	140+	Linear 2' and 4' T12 and T8 fixtures	Direct wire LED tube retrofit
		Incandescent screw in fixtures	LED screw in lamps
		LED fixtures	No upgrade
MAINTENANCE BUILDING	30+	Linear 4' T12 and T8 fixtures	Direct wire LED tube retrofit
		Incandescent screw in fixtures	LED screw in lamps
		LED fixtures	No upgrade
PAVILION	20+	Linear 4' T8 fixtures	Direct wire LED tube retrofit
BATH HOUSES AND SHOWER HOUSES	90+	Linear 4' T8 fixtures	Direct wire LED tube retrofit
		Incandescent and CFL screw in fixtures	LED screw in lamps
CABINS	140+	CFL screw in fixtures	LED screw in lamps
KOOSER			
PARK OFFICE	20+	Linear 2' T12 fixtures	Direct wire LED tube retrofit
		Incandescent screw in fixtures	LED screw in lamps
BATHROOMS	40+	Linear 4' T8 fixtures	Direct wire LED tube retrofit
		CFL screw in fixtures	LED screw in lamps
CABINS	180+	Incandescent and CFL screw in fixtures	LED screw in lamps
LAUREL HILL			
PARK OFFICE	70+	Linear 4' T12 and T8 fixtures	Direct wire LED tube retrofit
		Incandescent screw in fixtures	LED screw in lamps
MAINTENANCE BUILDING	40+	Linear 4' T12 and T8 fixtures	Direct wire LED tube retrofit
		Incandescent screw in fixtures	LED screw in lamps
		LED fixtures	No upgrade
WELL HOUSE	4	CFL screw in fixtures	LED screw in lamps
VISITOR CENTER	110+	Linear 4' T8 and T5 fixtures	Direct wire LED tube retrofit
		Incandescent screw in fixtures	LED screw in lamps

©2017 Energy Systems Group, LLC

PARK AND BUILDING	EST. QTY.	EXISTING CONDITION	PROPOSED UPGRADE
RESTROOMS	90+	Incandescent screw in fixtures	LED screw in lamps
COTTAGES AND LODGE	150+	Linear and U lamp 2' and 4' T12 and T8 fixtures	Direct wire LED tube retrofit
		Incandescent screw in fixtures	LED screw in lamps
		LED fixtures	No upgrade
GROUP CAMPS	590+	Linear 4' T12 fixtures	Direct wire LED tube retrofit
		Incandescent screw in fixtures	LED screw in lamps
		LED fixtures	No upgrade
LAUREL RIDGE			
MAINTENANCE BUILDING	1	LED fixtures	No upgrade
LINN RUN			
PARK OFFICE	80+	Linear 2' and 4' T8 fixtures	Direct wire LED tube retrofit
		CFL screw in fixtures	LED screw in lamps
MAINTENANCE BUILDING	50+	Linear 2' and 4' T8 fixtures	Direct wire LED tube retrofit
		CFL screw in fixtures	LED screw in lamps
SHOWER HOUSE	15+	Incandescent and CFL screw in fixtures	LED screw in lamps
CABINS	50+	Linear 4' T8 fixtures	Direct wire LED tube retrofit
		CFL screw in fixtures	LED screw in lamps
MAURICE K GODDARD			
PARK OFFICE		LED fixtures	No upgrade
MAINTENANCE BUILDING		LED fixtures	No upgrade
WOOD SHOP	20+	Linear 4' T8 fixtures	Direct wire LED tube retrofit
		Incandescent and CFL screw in fixtures	LED screw in lamps
RESTROOM	70+	Incandescent screw in fixtures	LED screw in lamps
MCCONNELLS MILL			
MAINTENANCE BUILDING	50+	Linear 4' T8 fixtures	Direct wire LED tube retrofit
		CFL screw in fixtures	LED screw in lamps
MORAINE			
PARK OFFICE	60+	Linear U lamp, 2' and 4', T12 fixtures	Direct wire LED tube retrofit
		CFL screw in fixtures	LED screw in lamps
MAINTENANCE BUILDINGS	50	Linear 4' T12 and T8 fixtures	Direct wire LED tube retrofit
		Incandescent and CFL screw in fixtures	LED screw in lamps
WATER TREATMENT BUILDING	40+	Linear 4' T12 fixtures	Direct wire LED tube retrofit
		CFL screw in fixtures	LED screw in lamps
RESTROOMS AND SHOWER HOUSES	30+	Linear 2' and 4' T12 and T8 fixtures	Direct wire LED tube retrofit
		Incandescent screw in fixtures	LED screw in lamps
BOATHOUSE AND FIRST AID STATION	20+	Linear 4' T8 fixtures	Direct wire LED tube retrofit
		Incandescent screw in fixtures	LED screw in lamps
CABINS	60+	Linear 4' T8 fixtures	Direct wire LED tube retrofit
		Incandescent and CFL screw in fixtures	LED screw in lamps
OHIOPYLE			
	250+	Linear 4' T8 fixtures	Direct wire LED tube retrofit

©2017 Energy Systems Group, LLC

PARK AND BUILDING	EST. QTY.	EXISTING CONDITION	PROPOSED UPGRADE
MAIN OFFICE, EVIRONMENTAL CENTER		CFL screw in fixtures	LED screw in lamps
		LED fixtures	No upgrade
MAINTENANCE BUILDING	120+	Linear 2' and 4' T12 and T8 fixtures	Direct wire LED tube retrofit
		CFL screw in fixtures	LED screw in lamps
RANGER STATION	30+	LED fixtures	No upgrade
TRAIN STATION	15+	CFL screw in fixtures	LED screw in lamps
BATH HOUSES	80+	Linear 2' and 4' T8 fixtures	Direct wire LED tube retrofit
		CFL screw in fixtures	LED screw in lamps
CABINS	15+	CFL screw in fixtures	LED screw in lamps
OIL CREEK			
PARK OFFICE	30+	Linear 4' T12 and T8 fixtures	Direct wire LED tube retrofit
		Incandescent screw in fixtures	LED screw in lamps
MAINTENANCE BUILDING	50+	Linear 4' T12 and T8 fixtures	Direct wire LED tube retrofit
		Incandescent and CFL screw in fixtures	LED screw in lamps
TRAIN STATION	10+	Linear 4' T8 fixtures	Direct wire LED tube retrofit
		CFL screw in fixtures	LED screw in lamps
POINT			
PARK OFFICE AND MAINTENANCE	60+	Linear 4' T8 fixtures	Direct wire LED tube retrofit
BATHROOM AND PUMP HOUSE	70+	Linear 4' T8 fixtures	Direct wire LED tube retrofit
MUSEUM	500+	Linear 4' T12, T8, and T5 fixtures	Direct wire LED tube retrofit
		CFL plug in fixture	LED retrofit
		Incandescent and CFL screw in fixtures	LED screw in lamps
PRESQUE ISLE			
TOM RIDGE ENVIRONMENTAL CENTER	680+	Linear 4' T12 and T8 fixtures	Direct wire LED tube retrofit
		Incandescent and CFL screw in fixtures	LED screw in lamps
		LED Exit signs	No upgrade
MAINTENANCE BUILDING	40+	Linear 4' T12 fixtures	Direct wire LED tube retrofit
		Incandescent screw in fixtures	LED screw in lamps
RANGER STATION	80+	Linear 4' T12 and T8 fixtures	Direct wire LED tube retrofit
		Incandescent and CFL screw in fixtures	LED screw in lamps
STULL INTERPRATIVE CENTER	20+	Linear 4' T12 fixtures	Direct wire LED tube retrofit
		Incandescent screw in fixtures	LED screw in lamps
MARINA AND BOATHOUSE	160+	Linear 4' T12 and T8 fixtures	Direct wire LED tube retrofit
		Incandescent screw in fixtures	LED screw in lamps
BATH HOUSES	70+	Linear 4' T8 fixtures	Direct wire LED tube retrofit
		Incandescent and CFL screw in fixtures	LED screw in lamps
PYMATUNING			
PARK OFFICE	40+	Linear 2' and 4' T12 and T8 fixtures	Direct wire LED tube retrofit

©2017 Energy Systems Group, LLC

PARK AND BUILDING	EST. QTY.	EXISTING CONDITION	PROPOSED UPGRADE
		Incandescent screw in fixtures	LED screw in lamps
		Incandescent exit signs	LED exit sign
MAINTENANCE BUILDING	120+	Linear 2' and 4' T12 and T8 fixtures	Direct wire LED tube retrofit
		Incandescent and CFL screw in fixtures	LED screw in lamps
ENVIRONMENTAL LEARNING CENTER	70+	Linear 2' and 4' T12 fixtures	Direct wire LED tube retrofit
		Incandescent and CFL screw in fixtures	LED screw in lamps
		Incandescent exit signs	LED exit signs
LAUNDRY, RESTROOMS AND BATHHOUSES	150+	Linear 4' T12 and T8 fixtures	Direct wire LED tube retrofit
		Incandescent screw in fixtures	LED screw in lamps
CABINS	120+	LED fixtures	No upgrade
RACCOON CREEK			
PARK OFFICE	70+	Linear 2' and 4' T12 and T8 fixtures	Direct wire LED tube retrofit
		CFL screw in fixtures	LED screw in lamps
MAINTENANCE AND CARPENTRY SHOP	100+	Linear 2' and 4' T12 and T8 fixtures	Direct wire LED tube retrofit
		CFL screw in fixtures	LED screw in lamps
WATER TREATMENT BUILDING	20+	Linear 2' and 4' T12 and T8 fixtures	Direct wire LED tube retrofit
		CFL screw in fixtures	LED screw in lamps
REC CENTER	20+	Linear 4' T12 fixtures	Direct wire LED tube retrofit
		CFL screw in fixtures	LED screw in lamps
		LED fixtures	No upgrade
LODGE AND CABINS	40+	CFL screw in fixtures	LED screw in lamps
RYERSON STATION			
PARK OFFICE	70+	Linear 2' and 4' T12 and T8 fixtures	Direct wire LED tube retrofit
		Incandescent screw in fixtures	LED screw in lamps
MAINTENANCE BUILDING	60+	Linear 2' and 4' T12 and T8 fixtures	Direct wire LED tube retrofit
		Incandescent and CFL screw in fixtures	LED screw in lamps
WATER TREATMENT	2	Linear 4' T12 and T8 fixtures	Direct wire LED tube retrofit
PAVILION	7	Linear 2' and 4' T12 and T8 fixtures	Direct wire LED tube retrofit
		Incandescent screw in fixtures	LED screw in lamps
CABIN	22	Linear 2' and 4' T12 and T8 fixtures	Direct wire LED tube retrofit
		CFL screw in fixtures	LED screw in lamps
YELLOW CREEK			
PARK OFFICE	30+	Linear 4' T12 and T8 fixtures	Direct wire LED tube retrofit
		CFL screw in fixtures	LED screw in lamps
MAINTENANCE BUILDING	50+	Linear 4' T12 and T8 fixtures	Direct wire LED tube retrofit
		CFL screw in fixtures	LED screw in lamps

©2017 Energy Systems Group, LLC

PARK AND BUILDING	EST. QTY.	EXISTING CONDITION	PROPOSED UPGRADE
ENVIRONMENTAL LEARNING CENTER	30+	Linear 4' T12 and T8 fixtures	Direct wire LED tube retrofit
		CFL screw in fixtures	LED screw in lamps
BATHHOUSE	20+	Linear 4' T8 fixtures	Direct wire LED tube retrofit
COTTAGES AND YIRTS	50+	Linear 4' T12 and T8 fixtures	Direct wire LED tube retrofit
		Incandescent and CFL screw in fixtures	LED screw in lamps
FORBES FOREST DISTRICT FD#4			
OFFICE	110+	Linear 2' and 4' T12 and T5 fixtures	Direct wire LED tube retrofit
		CFL screw in fixtures	LED screw in lamps
MAINTENANCE GARAGES	320+	Linear 4' T12 fixtures	Direct wire LED tube retrofit
		Incandescent and CFL screw in fixtures	LED screw in lamps
GALLITZIN FOREST DISTRICT FD#6			
MAINTENANCE GARAGES	130+	Linear 4' T12 fixtures	Direct wire LED tube retrofit
		Incandescent screw in fixtures	LED screw in lamps
CLEAR CREEK FOREST DISTRICT FD#8			
MAINTENANCE GARAGES	60+	Linear 4' T12 and T8 fixtures	Direct wire LED tube retrofit
		Incandescent screw in fixtures	LED screw in lamps
COMPLANTER FOREST DISTRICT FD#14			
MAINTENANCE GARAGES	70+	Linear 4' T12 and T8 fixtures	Direct wire LED tube retrofit
		Incandescent screw in fixtures	LED screw in lamps
DCNR REGION 2 OFFICE			
OFFICE	100+	Linear 2' and 4' T12 and T5 fixtures	Direct wire LED tube retrofit
		CFL screw in fixtures	LED screw in lamps
MAINTENANCE BUILDING	50+	Linear 4' T12 fixtures	Direct wire LED tube retrofit
		Incandescent screw in fixtures	LED screw in lamps
EXTERIOR – ALL PARKS			
EXTERIOR	70+	Linear 4' T12 fixtures	Direct wire LED tube retrofit
		Incandescent and CFL screw in fixtures	LED screw in lamps
		HID fixtures	New LED fixture/LED retrofit

2. Replace/install/upgrade HVAC Controls

During ESG's preliminary audits of DCNR's parks and buildings, we noted that many of the Park Offices, Visitor Centers, Learning Centers, and other administrative spaces did not utilize programmable thermostats or the programming features had been disabled. Programmable thermostats allow for the ability to program schedules based on the time of day and/or the week so that the HVAC systems maintain comfortable space temperatures when the spaces are in use. This allows for energy savings to be obtained by maintaining different temperature setpoints during unoccupied hours.

ESG recommends installing a seven (7) day programmable thermostats for Park Offices, Visitor Centers, Learning Centers, and other administrative spaces. These spaces are typically occupied between 7 AM and 5 PM with a few exceptions.

The new thermostats will be programmed to maintain the following temperature schedule.

©2017 Energy Systems Group, LLC

TEMPERATURE SETPOINTS

Occupied Heating Setpoint	68° F
Un-Occupied Heating Setpoint	50° F
Occupied Cooling Setpoint	72° F
Un-Occupied Cooling Setpoint	80° F

3. Replace Pumps/Motors when applicable

Replacing old, inefficient motors and pumps that are greater than 5HP to high efficiency units is a good opportunity for energy savings. During our walkthrough we did not see any opportunity for pump or motor replacement. In locations where large pumps and motors greater than 5HP were located, the motor or pumps had already been replaced within the last 5 years or were a special application motor and replacement would not fit under the requirements of a small GESA.

d. Additional ECMs Recommended by ESG

1. Building Envelope and Building Weatherization Improvements

In buildings that are heated or cooled, significant energy losses can occur through poorly insulated walls, ceilings, and floors and through failing or missing seals around doors and windows. ESG noted locations at each park where seals and insulation can be improved. For locations where the spaces are heated and/or cooled, the following scope of work will be implemented:

- Use 2-part foam to seal roof-to-wall intersections.
- Install additional insulation on top of existing bat insulation adding R-Value.
- Replace and install weather stripping, sweeps, and astragals on single and double exterior doors.
- Use 1-part foam seal air leaks around windows, air conditioning units, and building penetrations.
- Replace and install weather stripping on garage doors.
- Install weather stripping and insulation around attic and roof hatches.

©2017 Energy Systems Group, LLC

SUMMARY OF BUILDING ENVELOPE ITEMS
TO BE INSTALLED AT ALL DCNR REGION 2 PARKS AND FACILITIES
A detailed line-by-line descriptioncan be found in Appendix.

Existing Condition	QTY	UOM	Proposed Improvement
Worn out entry door weather stripping	520	each	Repair/replace weather strip on entry doors
Worn out entry door sweep	526	each	Install sweeps on entry doors
Existing roof wall gaps – interior	2915	ln ft.	Seal interior roof/wall intersection as part of compartmentalization
Worn out garage door weather strip	112	each	Replace garage door weather stripping
Missing or worn windows sealing	22,176	sq ft.	Seal exterior window perimeters

Existing Condition	QTY	UOM	Proposed Improvement
Missing or worn air conditioner sealing	3	each	Seal gaps around window air conditioner
Unsealed penetrations	21	SQ FT.	Seal penetrations at various locations above the drop ceiling and in mechanical rooms
Roof vents seal	4	each	Inspect and seal roof vents
Blown-in insulation	58,280	SQ FT.	Raise R-values using blown-in or loose fill insulation
Worn/missing astragal	46	each	Install new astrigal
Worn out double door weather stripping	48	each	Repair/replace weather strip on double doors
Worn out double door sweep	48	each	Install sweeps on double doors
Worn out and uninsulated attic hatch	10	each	Seal and insulate attic hatch

2. Install Instantaneous Tankless style Water Heaters
   Tank style storage water heaters use energy to maintain water temperature, even when there is not any hot water being used. Even tanks with very good insulation will need to energize to maintain the hot water temperature so that it's available when needed. Replacing these tank style water heaters with an instantaneous hot water heater will reduce standby losses associated with conventional tank style water heaters. Instantaneous water heaters energize as soon as there is a call for hot water and supply on demand.

©2017 Energy Systems Group, LLC

ECMs REQUIRING FURTHER INVESTIGATION

1. Utilization of Existing Natural Gas Wells
   Presque Isle State Park and Keystone State Park have natural gas wells that could be utilized in each park. During the IGA, Energy Systems Group will investigate the possibility of utilizing these wells for heating fuel at those parks.

ECMS CONSIDERED BUT NOT RECOMMENDED

1. Water Conservation Measures. Most of the parks surveyed obtain water from on-site wells that is treated to the proper safety requirements. A survey of the current well water operations did not uncover any potential for savings at these parks. These parks also generally operate their own wastewater treatment plants. A survey of the current wastewater treatment operations did not uncover any potential for savings at these parks. The parks that utilize local municipalities for their water and sewer supply already utilize low flow fixtures and did not have any opportunity for savings.
2. Alternative Energy Sources. DCNR parks provide a good opportunity for the installation of alternative energy sources such as wind and solar power generation. However, the size of the systems required to provide benefit to DCNR will not fit into the maximum project size requirements of a Small GESA project.

©2017 Energy Systems Group, LLC

2.3-2 Energy Audit

a. Proposal clearly and thoroughly describes the scope of the Energy Audit, including systems covered, personnel, methodology and schedule milestones

Energy System Group's Investment Grade Audit (IGA) will thoroughly investigate building systems, compile results, and provide comprehensive costs and savings analysis. Our investigation will detail the most cost effective measures in conjunction with any specific facility needs and goals to be included in the final list of recommended Energy Conservation Measures (ECMs). We will also include ECMs that were excluded due to underperforming economics so that DGS will understand all of the measures that were evaluated.

At the commencement of the IGA, ESG will request a building inventory list, obtain utility costs and other baseline information, and discuss the buildings and potential projects with park personnel. This study will include analyzing the applicable utility bills and rate schedules, and determining the appropriate incremental costs to be used in our savings analyses.

ESG will assemble a highly qualified team for the project from its staff and subcontractors. In addition to the subcontractors, the key ESG personnel that will have varied roles in the audit phase are Dan Khuu, Mike Lowery, Tony Prelec, Mahesh Bala and Scott Gracely. The subcontractors ultimately selected to assist with the facility audits and analysis will depend on the project size, key energy systems involved, and any preferences identified by DGS and DCNR. ESG will conduct the IGA, keeping in mind that the actual measurements obtained will be a critical part of the baseline and the Measurement & Verification (M&V) plan.

b. Proposal thoroughly discusses how the Proposer's approach to the Energy Audit will comply with DGS' Energy Audit format

ESG's systematic approach to implementing the detailed IGA includes a preliminary site visit to evaluate baseline equipment operations and conditions (Small GESA Project Design Manual - Chapter 2, Section 201). Following the preliminary survey, a list of existing conditions, including deficiencies or upgrades, are identified and a measurement and/or metering plan devised.

Short-term measurements, in combination with drawings, manufacturer's data, and ESG experience, are utilized to develop baseline energy budgeting for various building systems, such as lighting, cooling, heating, pumps and fans (Chapter 2, Section 201). The baseline energy budgeting is a critical step to establishing boundaries for realizable energy savings expectations through various ECMs. The total building energy use (utility bills or, in the absence of utility bills, calculated from benchmark data for similar facilities or systems) is then compared to the aggregate energy budget number to further validate the baseline values. ESG will adhere to all code and permitting requirements (Chapter 2, Section 202). If land surveys are required, ESG will adhere to requirements listed in Chapter 2, Section 203. Subsurface and related site investigations will be handled in accordance with Chapter 2, Section 204 and any design restrictions will be addressed according to the guidelines laid out in Chapter 2, Section 205.

©2017 Energy Systems Group, LLC

c. Proposer clearly and thoroughly describes a reasonable and transparent approach to pricing the costs to prepare an Energy Audit for this project

ESG's approach to pricing the IGA is straightforward. We estimate the effort (man-hours) to perform all the necessary steps described above, the hourly rate for the individuals assigned, and any applicable per diem to develop a total projected labor cost for the IGA. Finally, we apply management labor, administrative labor, overhead and profit margin to determine the total cost of the IGA.

ESG is willing to share the cost breakdown with DGS prior to beginning the IGA to ensure agreement with the estimated man-hours and the time to perform the necessary functions. ESG's approach is totally transparent concerning pricing of the IGA for the PA Small GESA-4.

©2017 Energy Systems Group, LLC

2.3-3 Costs

a. Degree to which the proposed energy analysis demonstrates sound engineering principles and the reasonableness of the proposed savings

ESG's Proposed cost savings for the Small GESA 4 Project reduces the baseline annual utility expenses by $219,696, or over 18 percent. This is well in line with our experiences at similar facilities.

ANNUAL UTILITY USE AND SAVINGS SUMMARY							
	Base		Post		Savings		% Energy Savings
Utility	Unit	Costs	Unit	Costs	Unit	Costs	
Electric	7,631,839 kWh	$ 990,225	5,587,582 kWh	$ 813,192	2,044,257 kWh	$ 177,033	26.8%
Heating Fuel	14,036,479 kBTU	$ 204,221	11,104,144 kBTU	$ 161,558	2,932,335 kBTU	$ 42,664	20.9%
Subtotal		$ 1,194,446		$ 974,750		$ 219,696	**18.4%**

b. Proposer established a reasonable cost for preparing an Energy Audit for this scope of work in compliance with the methodology discussed in the Cost Submission

Based upon the large geographic area in which DCNR Region 2 encompasses, ESG expects that the Investment Grade Audit (IGA) will take between 30-45 days at a cost of $32,500. This cost will be rolled into the funding for the project, providing DGS and DCNR agrees to move forward with the GESA project following IGA. If, after the IGA, DGS and DCNR decline to move forward with the overall GESA project, then ESG would bill the Commonwealth for the $32,500, cost of the audit, net 30 days.

c. Proposer provides annual financial projection for the length of the contract and each projection appears in the proper format listed in the RFP

The cash flow for Small GESA-4 is provided in this section. ESG guarantees that the total energy savings projected in final scope of work will be at least 95% of the savings projected in the proposal, and the actual ECM costs will be within 10% of the costs listed in the ECM Cost table. The project will be self-funding over the financial term of 12 years, per the RFP.

©2017 Energy Systems Group, LLC

©2017 Energy Systems Group, LLC

PENNSYLVANIA - SMALL GESA-4 DCNR

ENERGY PERFORMANCE CONTRACT CASH FLOW

Financials Updated	3/8/2017
Interest Rate (LLC)	**3.00%**
Loan Value	**$2,206,473**
Loan Repayment Period (yrs)	**12**
Payment Frequency	**Annual**
Energy Cost Esc./yr	1.0%
M&V Term (years)	**3**

	A	B	C	D	E	F	G	I	J	K
Starting Contract Years	Annual Energy Costs **without** Improvements	Annual Energy Costs **with** Improvements	**Annual Energy Cost Savings**	**Agreed-Upon Operational Savings**	**Total Including Guaranteed Savings**	**Payments for Financing equipment**	**Payment for monitoring and maintenance services**	**Net Annual Benefit**	**Cumulative Cash Flow**	**Net Present Cash Flow**
Agreed Upon Construction Savings			$ -	$ -	$ -	$ -	$ -	$ -		$ -
1	$ 1,194,446	$ 974,750	$ 232,120	$ -	$ 232,120	$ 215,211	$ 10,326	$ 6,583	$ 6,583	$ 6,583
2	$ 1,206,391	$ 984,498	$ 234,441	$ -	$ 234,441	$ 215,211	$ 10,635	$ 8,595	$ 15,178	$ 14,277
3	$ 1,218,455	$ 994,343	$ 236,785	$ -	$ 236,785	$ 215,211	$ 10,955	$ 10,620	$ 25,799	$ 23,718
4	$ 1,230,639	$ 1,004,286	$ 239,153	$ -	$ 239,153	$ 215,211	$ -	$ 23,943	$ 49,741	$ 44,184
5	$ 1,242,946	$ 1,014,329	$ 241,545	$ -	$ 241,545	$ 215,211	$ -	$ 26,334	$ 76,076	$ 65,829
6	$ 1,255,375	$ 1,024,472	$ 243,960	$ -	$ 243,960	$ 215,211	$ -	$ 28,750	$ 104,825	$ 88,550
7	$ 1,267,929	$ 1,034,717	$ 246,400	$ -	$ 246,400	$ 215,211	$ -	$ 31,189	$ 136,014	$ 112,252
8	$ 1,280,608	$ 1,045,064	$ 248,864	$ -	$ 248,864	$ 215,211	$ -	$ 33,653	$ 169,668	$ 136,842
9	$ 1,293,414	$ 1,055,515	$ 251,352	$ -	$ 251,352	$ 215,211	$ -	$ 36,142	$ 205,810	$ 162,235
10	$ 1,306,349	$ 1,066,070	$ 253,866	$ -	$ 253,866	$ 215,211	$ -	$ 38,655	$ 244,465	$ 188,349
11	$ 1,319,412	$ 1,076,731	$ 256,405	$ -	$ 256,405	$ 215,211	$ -	$ 41,194	$ 285,659	$ 215,108
12	$ 1,332,606	$ 1,087,498	$ 258,969	$ -	$ 258,969	$ 215,211	$ -	$ 43,758	$ 329,417	$ 242,439
TOTAL	**$ 15,148,571**	**$ 12,362,273**	**$ 2,943,860**	**$ -**	**$ 2,943,860**	**$ 2,582,527**	**$ 31,916**	**$ 329,417**	**$ 329,417**	**$ 242,439**

2.3-4 Measurement and Verification

a. Degree to which the proposed Measurement and Verification (M&V) plan adheres to all M&V protocol standards and demonstrates scalability for measurement and verification of the proposed energy baseline, adjustment factors and energy cost savings

Energy Systems Group (ESG) follows industry-accepted methods and approaches for measurement and verification associated with energy, operations and maintenance (O&M), and water projects. ESG complies with the International Performance Measurement and Verification Protocol (IPMVP), which is prepared and updated by the Efficiency Valuation Organization. ESG is currently utilizing the IPMVP, September 2010 in our GESA projects.

The IPMVP is widely adopted by national and regional government agencies, and by industry organizations, to help manage their programs and enhance the credibility of their implemented energy projects and reported results.

PROPOSED ENERGY BASELINE APPROACH

Our energy guarantees are based on a proven track record and a wealth of experience in establishing and calculating the customer's energy, water, and O&M baselines. We typically analyze up to three years of data to establish a true baseline.

One important aspect of establishing an energy baseline is to analyze the utility bills and energy-use profiles. Utility baseline profiles provide a foundational understanding of utility use and seasonal patterns. In turn, these patterns yield the potential ECMs and their realistic magnitude of opportunity for cost savings. Analysis of the electric demand, electric load factor, electric power usage, and gas usage during peak and lowest use months provides a wealth of knowledge to the trained eyes of ESG's energy engineers. The method utilized for determining energy savings within most of our projects is based on a model that starts with the utility bills, paired with the adage that "*you can't save what you aren't paying*."

Utility Cost and Usage Foundation

Once an energy baseline is established, we utilize a number of data gathering tools and processes to obtain all the relevant information required to calculate energy use (pre- and post-implementation) in order to assess the economic impact of recommended facility improvements. Such improvements are discussed in the remainder of this section.

We use similar data analysis techniques as it relates to water, O&M, and other project savings opportunities. Whether it is energy, water, or O&M opportunities we are evaluating, we work with our customers to obtain documented costs, rates, invoices, records, etc. and develop trend graphs and other analysis/reporting tools. ESG performs a thorough and detailed analysis of actual bills and invoices to profile client energy expenses, understand applicable rates and tariffs, unit pricing, and energy use.

Adjustments to Baseline Methodology

Proper analysis and comparison can only be achieved if the environmental and facility parameters are comparable to those of the base year. Examples of factors that affect the environment and facility parameters are weather, energy rates, facility schedules and changes in equipment.

©2017 Energy Systems Group, LLC

b. Proposal clearly and thoroughly describes a reasonable and transparent approach to pricing the costs to measure and verify the guaranteed savings for the entire duration of the project

The pricing methodology utilized by ESG to determine the value of a M&V program for any Small GESA project is based on effort expended or value of resources utilized. Our typical nominal rates in Pennsylvania for personnel involved in measurement and verification are as follows:

Measurement and Verification Manager	$70.00 per hour
Energy Engineer	$95.00 per hour
Clerical	$45.00 per hour
Report Generator	$45.00 per hour

ESG estimates the manpower required to measure, calculate and report the savings based on factors such as type of ECMs, M&V protocol, number of meters and number of locations. For costing purposes, we also consider expenses such as travel, airfare, hotel, rental car, etc. for the staff. Once all these factors are calculated and costs are determined for the M&V program, Energy Systems Group applies 15% overhead and 10% profit to the costs to arrive at the total cost of the M&V program for each year M&V services are provided.

c. Proposal clearly indicates the M&V pricing is premised upon design and construction in compliance with DGS' Design Manual and General Conditions and also in compliance with the International Performance Measurement and Verification Protocol (IPMVP)

Our M&V program in Pennsylvania will follow all guidelines set forth in the DGS Design Manual, general conditions and administrative procedures, and the IPMVP.

As stated in Section b above, the M&V pricing is based on our estimated efforts for your given situation (i.e. types of ECMs and requirements of the PA Small GESA program).

Our guarantee ensures that ESG will pay any savings shortfalls, in full, directly to the customer. Any shortfall will be reconciled annually by ESG in an amount equal to the shortfall as calculated by the annual energy audit and accepted by our customer and their designated facilities representatives.

d. Proposal thoroughly describes the methods, schedule, scope and personnel who will be performing the Measurement and Verification

Measurement and Verification (M&V) is a vital component of any energy performance contract. ESG's M&V personnel will be involved with the project from conception to commissioning, and in every year of the contract term. M&V personnel are critical during the development phase to establish the most appropriate and cost effective M&V protocol. They play a crucial role in establishing corresponding plans and ensuring that post installation measurements are performed according to the chosen M&V protocol. Additionally, they ensure proper documentation and analysis of the measurements are performed. The Lead Engineer will serve as the contact point for M&V information and will utilize ESG's M&V resources to provide documentation that the installed systems are performing at or above the guaranteed levels. ESG's M&V team members have many years of M&V experience with applicable International Performance Measurement and Verification Protocol (IPMVP) standards.

The majority of our guarantees are based on utility bill comparisons (i.e., IPMVP Option C) and provide ongoing focus for our customers on operating their facilities in an energy-efficient manner. ESG guarantees energy savings using the most appropriate methodology for accuracy, customer risk mitigation and cost effectiveness. It is

©2017 Energy Systems Group, LLC

common for guarantee contracts to use multiple methodologies and data collection techniques to arrive at the best process for each facility.

ESG's core competencies and focus are on providing our customers with "Building Upgrades That Pay for Themselves." A key activity of our partnership with our customers is the measurement and verification of savings results. Our customers have always received timely, accurate, and easy to understand documentation of the savings results.

M & V Personnel: ESG Lead Engineer Michael Lowery will serve as the contact point for M&V information and will utilize ESG's M&V resources to provide documentation that the installed systems are performing to the guaranteed levels. ESG M&V Manager, Donna Wicks has many years of M&V experience with applicable International Performance Measurement and Verification Protocols (IPMVP). She will oversee all M&V activities to ensure the plan is executed correctly. ESG has nine other professionally trained M&V experts whom are Association of Engineers Certified with Measurement and Verification professional credentials.

ESG's savings results for our customers have an average positive deviation of more than 10%, which clearly demonstrates our ability to accurately project and achieve the savings we guarantee.

Compliance with Customer Requirements: ESG will work with DGS to define a customized approach for M&V that best reflects the goals of the project, is accurate, is fair to both parties and is also helpful in maximizing savings results for the term of this performance contract.

M&V Schedule: ESG will work with DGS to define an M&V program and schedule that is a best fit for the ECMs chosen for the project.

Adjustment for Shortfalls and Windfalls: All savings above the project guarantee amount are entirely DGS' to keep. Each year's annual savings must meet/exceed DGS' debt service payments for that year. Any shortfall will be reconciled annually by ESG in an amount equal to the shortfall as calculated by the annual energy audit and accepted by customer representatives.

Regular Interval Post-Installation Verification: At regular intervals, ESG will verify that the installed equipment or systems have been properly maintained and are operating correctly. Although annual reports are required for establishing savings guarantees, reports should be prepared at least semi-annually to ensure systems are working properly, allowing for fine-tuning of measures throughout the year based on operational feedback.

Baseline development: The strength and foundation of all M&V reporting is the appropriate development of the baseline. For this response we have used the baseline data provided to us. However, upon selection, ESG will first begin a detailed review of utility bill data for the most recent three to four years of data.

Formal reports to Customer: We typically provide annual guarantee reconciliation report, however ESG can also customize the frequency as required by DGS.

©2017 Energy Systems Group, LLC

Investment Grade Audit Submission



Photo: Charlene Reinhart

PA GESA-4 Project for Department of General Services
at
Department of Conservation and Natural Resources
Western Region

ESG ENERGY SYSTEMS GROUP

Tony Prelec, Sales Account Executive
Harrisburg, PA | January 2018

©2018 Energy Systems Group, LLC

TABLE OF CONTENTS

I. Executive Summary

II. Financials
A. GESA Project Cash Flow
B. Summary of Project Costs for each DCNR location

III. Scope of Work - ECM's
A. ECM Table
B. Lighting
C. Building Envelope
D. Water Conservation
E. Mechanical

IV. Measurement & Verification, Performance Assurance/Commissioning
A. M&V
B. Commissioning

V. Preventive Maintenance & Training
A. Preventive Maintenance
B. DCNR Staff Training

Appendices
- Energy Baseline
- Lighting Line by Line
- Building Envelope Line by Line
- Water Conservation Line by Line
- Energy Calculations
- Equipment Specification Sheets
- Drawings

©2013 Energy Systems Group, LLC

ESG ENERGY SYSTEMS GROUP



©2011 Energy Systems Group, LLC

www.energysystemsgroup.com

I – EXECUTIVE SUMMARY

The Energy Systems Group project team is pleased that DGS/DCNR has selected our company to prepare a $5.5M Guaranteed Energy Savings Agreement (GESA) project for the DCNR Western Region 2. The project consists of three base Energy Conservation Measures (ECMs) consisting of LED Lighting Upgrades, Building Envelope Improvements, and Water Conservation. The project also includes many of the "Wish List" items requested by DCNR during the development of the final project scope. The "Wish List" items are current infrastructure upgrades required by various DCNR facilities which will yield additional energy savings, but tend to have a higher simple payback verses the three base ECM's previously mentioned. The positive financial aspects of the project are as follows:

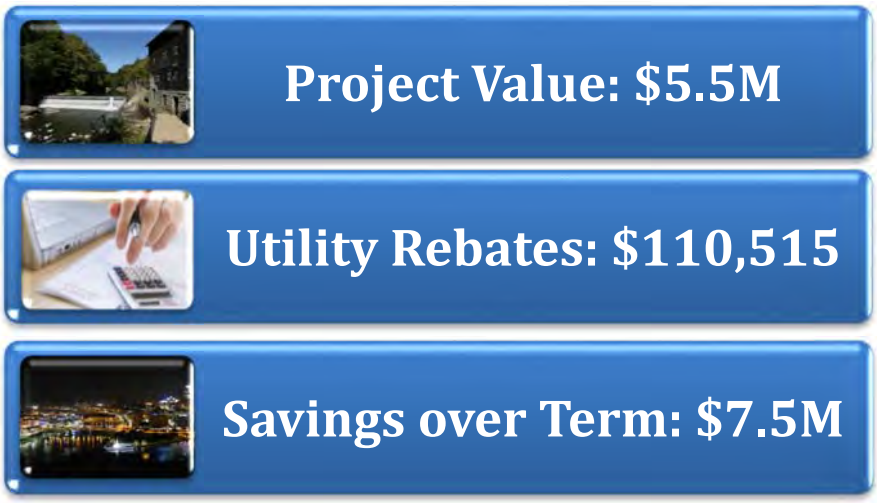

On the following page is a table which identifies each DCNR location included or excluded from the GESA project:

©2013 Energy Systems Group, LLC

PA GEGA - DCNR Western PA - REGION 2 Locations Included in the GESA Project			
#	**LOCATIONS**	**Included**	**Notes**
1	FD#4 Forbes Forest District, Laughlintown, PA	Yes	
2	FD#6 Gallitzin Forest District, Ebensburg, PA	Yes	Includes all buildings except Main Office
3	FD#8 Clear Creek Forest District, Clarion, PA	Yes	
4	FD#14 Cornplanter Forest District, Warren, PA	Yes	
5	DCNR Region 2 District Office 195 Park Road, Prospect, PA	Yes	District office is located in Moraine State Park
6	Allegheny Islands State Park	No	No Buildings
7	Clear Creek State Park	Yes	
8	Cook Forest State Park	Yes	
9	Erie Bluffs State Park	No	Limited Buildings
10	Hillman State Park	No	Limited Buildings
11	Jennings Environmental Education Center	Yes	
12	Keystone State Park	Yes	
13	Kooser State Park	Yes	
14	Laurel Hill State Park	Yes	
15	Laurel Mountain State Park	No	Ski Lodge managed by third party
16	Laurel Ridge State Park	Yes	
17	Laurel Summit State Park	No	Six acre picnic area
18	Linn Run State Park	Yes	
19	Maurice Goddard State Park	Yes	
20	McOnnells Mill State Park	Yes	
21	Moraine State Park	Yes	
22	Ohiopyle State Park	Yes	
23	Oil Creek State Park	Yes	
24	Point State Park	Yes	
25	Presque Isle State Park	Yes	
26	Pymatuning State Park	Yes	
27	Raccoon Creek State Park	Yes	
28	Ryerson Station State Park	Yes	
29	Yellow Creek State Park	Yes	

©2013 Energy Systems Group, LLC

Listed below are the positive environmental impacts of implementing the DCNR GESA Project for the State of Pennsylvania.

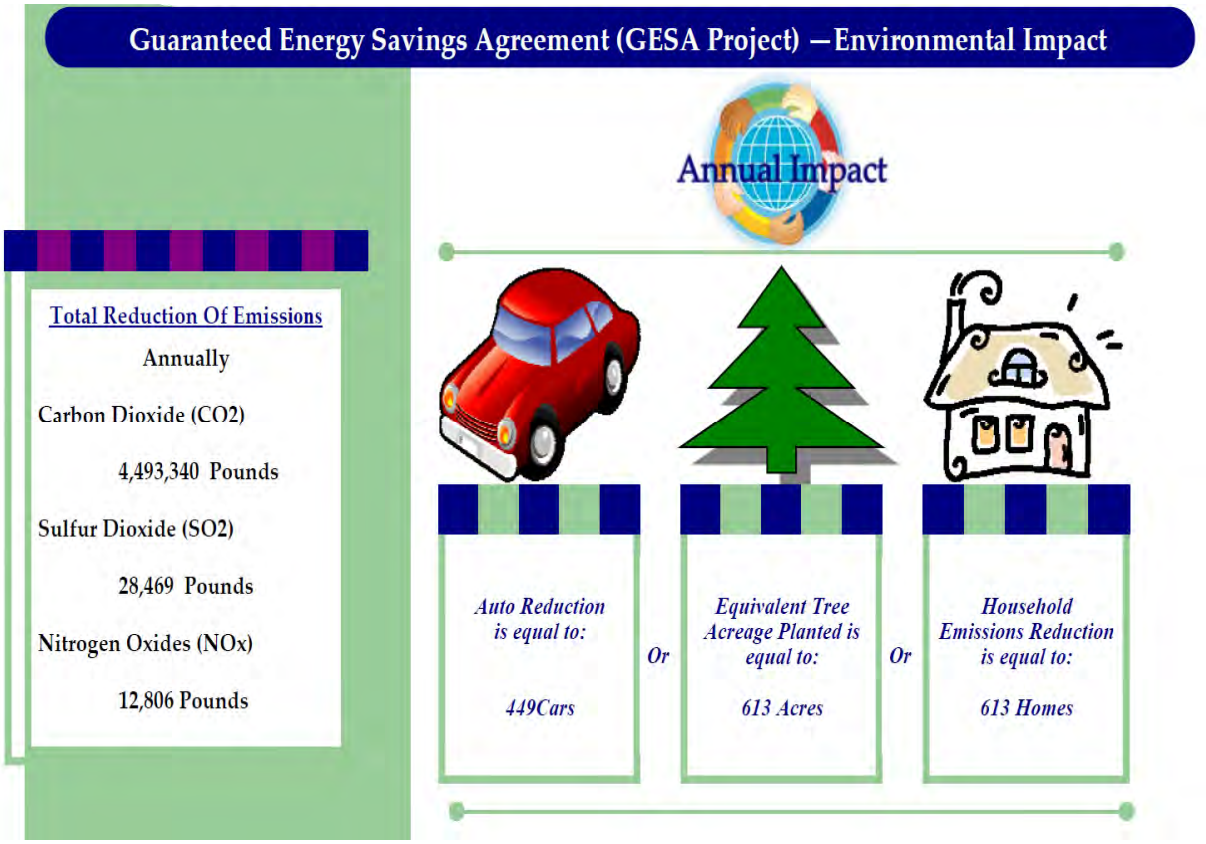

As you can see the positive environmental impact of this DCNR GESA project is quite substantial and best of all the GESA project will pay for itself from energy savings and will present no additional burden for Pennsylvania taxpayers.

ESG is looking forward to implementing another showcase Energy Project for the Commonwealth of Pennsylvania, just as we did for PA DOC at SCI Dallas. It will be a project that DCNR will be proud to showcase for other agencies considering GESA type projects. Thank you for selecting ESG as your energy service company.

©2013 Energy Systems Group, LLC

ESG ENERGY SYSTEMS GROUP









©2011 Energy Systems Group, LLC

www.energysystemsgroup.com

Project Financials

In this section are the Project Cash Flow for a 20 year GESA Project, Utility Rebates and Summary of Project Costs per DCNR location.

PA GESA - DCNR Western PA - Region 2 - 20 Year SPB
ENERGY PERFORMANCE CONTRACT CASH FLOW

Financials Updated	1/22/2018
Interest Rate (LLC)	3.00%
Total Project Value	$5,533,648
Other Costs	
Capital Contribution	$0
Rebate	$110,515
Loan Value	$5,423,134
Period (yrs)	20
Payment Frequency	Annual
Energy Cost Esc./yr	1.0%
Labor Cost Esc./yr	3.0%
Maintenance Cost Esc	1.0%
Construction Period (months)	12

			TOTAL COST SAVINGS	PROGRAM COSTS			FINANCIAL BENEFIT
Year	Total Annual Energy Savings	Maintenance Material Savings	Total Guaranteed Savings[1]	Lease Payment	ESG M&V Costs	Total Program Costs[2]	Excess Savings
Construction	$ 151,361.57	$ 0		$ 0	$ 0	$ 0	$ 0
1	$ 302,723	$ 31,183	$ 485,268	$ 477,000	$ 7,568	$ 484,568	$ 700
2	$ 305,750	$ 31,495	$ 337,245	$ 328,000	$ 7,795	$ 335,795	$ 1,450
3	$ 308,808	$ 31,810	$ 340,618	$ 331,000	$ 8,029	$ 339,029	$ 1,589
4	$ 311,896	$ 32,128	$ 344,024	$ 344,000		$ 344,000	$ 24
5	$ 315,015	$ 32,449	$ 347,464	$ 347,000		$ 347,000	$ 464
6	$ 318,165	$ 32,774	$ 350,939	$ 350,900		$ 350,900	$ 39
7	$ 321,347	$ 33,102	$ 354,448	$ 354,000		$ 354,000	$ 448
8	$ 324,560	$ 33,433	$ 357,993	$ 357,900		$ 357,900	$ 93
9	$ 327,806	$ 33,767	$ 361,573	$ 361,000		$ 361,000	$ 573
10	$ 331,084	$ 34,105	$ 365,188	$ 365,000		$ 365,000	$ 188
11	$ 334,395	$ 34,446	$ 368,840	$ 368,000		$ 368,000	$ 840
12	$ 337,739	$ 34,790	$ 372,529	$ 372,000		$ 372,000	$ 529
13	$ 341,116	$ 35,138	$ 376,254	$ 376,000		$ 376,000	$ 254
14	$ 344,527	$ 35,489	$ 380,017	$ 380,000		$ 380,000	$ 17
15	$ 347,972	$ 35,844	$ 383,817	$ 383,000		$ 383,000	$ 817
16	$ 351,452	$ 36,203	$ 387,655	$ 387,000		$ 387,000	$ 655
17	$ 354,967	$ 36,565	$ 391,531	$ 391,000		$ 391,000	$ 531
18	$ 358,516	$ 36,930	$ 395,447	$ 395,000		$ 395,000	$ 447
19	$ 362,102	$ 37,300	$ 399,401	$ 399,000		$ 399,000	$ 401
20	$ 365,723	$ 37,673	$ 403,395	$ 205,303		$ 205,303	$ 198,092
AGGREGATE	**$ 6,817,023**	**$ 686,624**	**$ 7,503,647**	**$ 7,272,103**	**$ 23,392**	**$ 7,295,496**	**$ 208,151**

Notes:
1. Construction or Year 0 savings are the result of an estimation of realized savings during the construction period prior to the commencement of the savings guarantee.
2. Maintenance savings is derived from material cost savings only and does not include any labor savings.
3. Interest rate and Escalation rates dictated by PA DGS.
4. ESG is an energy services and engineering company, not a financial advisor.
5. The cash flows shown are for illustration, and they are not intended as financial advice.
6. Lease Payment includes construction period financing.
7. Utility rebates are estimated and are not guaranteed.

©2013 Energy Systems Group, LLC

Rebates

ESG will work with each DCNR location manager to maximize and apply for any available rebates. ESG will also work with the DCNR to explore all available markets for utility rebates and incentives. There are a number of programs available to help incentivize utility customers to reduce their dependence on the grid and move towards more energy efficient technology.

Utility Rebates		
Program	**Estimated Incentive/ Rebate**	**Frequency**
ACT 129 – Utility Rebates	$110,515	One Time payment – Maximum per account

©2013 Energy Systems Group, LLC

PA GESA - DCNR Western PA - Region 2

SUMMARY OF PROJECT COSTS FOR EACH DCNR LOCATION

Location	Building ECM Group	ECM	TOTAL SAVINGS $/yr	ECM Budget	Simple Pay Back	Include Y=yes, N = No)
1	**Clear Creek State Park**		**$5,367**	**$79,962**	**14.9**	Y
		Lighting Improvements - LED Upgrades				Y
		Building Weatherization and Insulation Improvements				Y
		Domestic Water Improvements				N
2	**Cook Forest State Park**		**$24,413**	**$173,266**	**7.1**	Y
		Lighting Improvements - LED Upgrades				Y
		Building Weatherization and Insulation Improvements				Y
3	**Erie Bluffs State Park**		**$0**	**$0**	**N/A**	N
		Lighting Improvements - LED Upgrades				N
		Building Weatherization and Insulation Improvements				N
		Domestic Water Improvements				N
4	**Jennings Evironmental Center**		**$3,253**	**$39,519**	**12.1**	Y
		Lighting Improvements - LED Upgrades				Y
		Building Weatherization and Insulation Improvements				Y
		Domestic Water Improvements				N
5	**Keystone State Park**		**$7,390**	**$78,338**	**10.6**	Y
		Lighting Improvements - LED Upgrades				Y
		Building Weatherization and Insulation Improvements				Y
		Domestic Water Improvements				N
6	**Kooser State Park**		**$8,282**	**$42,296**	**5.1**	Y
		Lighting Improvements - LED Upgrades				Y
		Building Weatherization and Insulation Improvements				Y
		Domestic Water Improvements				N

ESG ENERGY SYSTEMS GROUP
Building Performance with Energy

PA GESA - DCNR Western PA - Region 2

SUMMARY OF PROJECT COSTS FOR EACH DCNR LOCATION

Location	Building ECM Group	ECM	TOTAL SAVINGS $/yr	ECM Budget	Simple Pay Back	Include Y=yes, N = No)
7	**Laurel Hill State Park**		**$23,789**	**$256,291**	**10.8**	Y
		Lighting Improvements - LED Upgrades				Y
		Building Weatherization and Insulation Improvements				Y
		Domestic Water Improvements				N
8	**Laurel Mountain State Park**		**$30,545**	**$289,053**	**9.5**	Y
		Lighting Improvements - LED Upgrades				Y
		Building Weatherization and Insulation Improvements				N
		Domestic Water Improvements				N
9	**Laurel Ridge State Park**		**$949**	**$25,755**	**27.1**	Y
		Lighting Improvements - LED Upgrades				N
		Building Weatherization and Insulation Improvements				Y
		Domestic Water Improvements				N
10	**Laurel Summit State Park**		**$0**	**$0**	**N/A**	N
		Lighting Improvements - LED Upgrades				N
		Building Weatherization and Insulation Improvements				N
		Domestic Water Improvements				N
11	**Linn Run State Park**		**$5,460**	**$61,829**	**11.3**	Y
		Lighting Improvements - LED Upgrades				Y
		Building Weatherization and Insulation Improvements				Y
		Domestic Water Improvements				N
12	**Maurice K Goddard State Park**		**$6,021**	**$73,429**	**12.2**	Y
		Lighting Improvements - LED Upgrades				Y
		Building Weatherization and Insulation Improvements				Y
		Domestic Water Improvements				N
13	**McConnells Mill State Park**		**$705**	**$11,423**	**16.2**	Y
		Lighting Improvements - LED Upgrades				Y
		Building Weatherization and Insulation Improvements				N
		Domestic Water Improvements				N

PA GESA - DCNR Western PA - Region 2

SUMMARY OF PROJECT COSTS FOR EACH DCNR LOCATION

Location	Building ECM Group	ECM	TOTAL SAVINGS $/yr	ECM Budget	Simple Pay Back	Include Y=yes, N = No)
14	**Moraine State Park**		**$23,873**	**$513,367**	**21.5**	Y
		Lighting Improvements - LED Upgrades				Y
		Building Weatherization and Insulation Improvements				Y
		Domestic Water Improvements				N
		Install remote Heating Control for 11 Modern Cabins				Y
		Replace Oil Furnace at Park Office				Y
		Replace Doors and Windows at 2 Maintenance Buildings				Y
		Install Instantaneous Hot Water Heaters at Modern Cabins				Y
15	**Ohiopyle State Park**		**$17,650**	**$200,543**	**11.4**	Y
		Lighting Improvements - LED Upgrades				Y
		Building Weatherization and Insulation Improvements				Y
		Domestic Water Improvements				N
16	**Oil Creek State Park**		**$2,203**	**$27,958**	**12.7**	Y
		Lighting Improvements - LED Upgrades				Y
		Building Weatherization and Insulation Improvements				Y
		Domestic Water Improvements				N
17	**Point State Park**		**$9,196**	**$112,697**	**12.3**	Y
		Lighting Improvements - LED Upgrades				Y
		Building Weatherization and Insulation Improvements				Y
		Domestic Water Improvements				Y
		Replace Upward Lighting in the Portal Bridge to LED				Y
		Remove the Four (4) 1000 Watt Metal Halide Lights and Retrofit with LED fixtures and Bath and Pump House				Y
		Remove Eighteen (18) Center Column 1000 Watt Halogen Lamps and Retrofit them with LED Lamps				Y

PA GESA - DCNR Western PA - Region 2

SUMMARY OF PROJECT COSTS FOR EACH DCNR LOCATION

Location	Building ECM Group	ECM	TOTAL SAVINGS $/yr	ECM Budget	Simple Pay Back	Include Y=yes, N = No)
18	**Presque Isle State Park**		**$63,896**	**$2,040,424**	**31.9**	Y
		Lighting Improvements - LED Upgrades				Y
		Building Weatherization and Insulation Improvements				Y
		Domestic Water Improvements				N
	II. Tom Ridge Environmental Center	Correct Excessive Pressure in Tower				Y
		Replace Failed Fan Powered Boxes				Y
		Adding individual Private Temperature Controls				Y
		Relocate Thermostats Located on Outside Walls				Y
		Demand Control Ventilation				N
		Evaluate Lab Equipment for Retrofit				N
		Replace Heat Recovery Wheels on AHU 1 and 2				Y
		Replace Exterior Air Handling Units-All Units				N
		Implement Occupied/Unoccupied Temperature Control				Y
		Replace Boilers in Mechanical Room				N
		Replace Failed Water Heater				Y
		Install New Radiant Tube Heating System and Replace Boiler Maintenance Building				N
		Install VFD on Pumps				Y
		Replace Exterior Air Handling Units-AHU 3 Only				Y
		Replace Heat Recovery Wheel on AHU 3				N
		Repair Failed Fan Powered Boxes				N
	III. Presque Isle	Tie Park Waste Water to Local Municipal WWTP				N
		Wind Power				N
		Replace Boiler and Install New Radiant Tube Heating System In Maintenance Building				Y

PA GESA - DCNR Western PA - Region 2

SUMMARY OF PROJECT COSTS FOR EACH DCNR LOCATION

Location	Building ECM Group	ECM	TOTAL SAVINGS $/yr	ECM Budget	Simple Pay Back	Include Y=yes, N = No)
19	**Pymatuning State Park**		**$16,661**	**$561,869**	**33.7**	Y
		Lighting Improvements - LED Upgrades				Y
		Building Weatherization and Insulation Improvements				Y
		Domestic Water Improvements				N
		Replace Oil Boiler with Propane Boiler at Jamestown Maintenance				Y
		Replace Oil Boiler with Propane Boiler at Park Office				Y
		Replace Electric Baseboard Heater with Convection Electric Wall Mount at Modern Cabins				N
		Install Propane Tankless Water Heaters at Jamestown and Linesville Bath Houses				N
20	**Raccoon Creek State Park**		**$11,158**	**$195,373**	**17.5**	Y
		Lighting Improvements - LED Upgrades				Y
		Building Weatherization and Insulation Improvements				Y
		Domestic Water Improvements				N
21	**Ryerson Station State Park**		**$4,317**	**$74,787**	**17.3**	Y
		Lighting Improvements - LED Upgrades				Y
		Building Weatherization and Insulation Improvements				Y
		Domestic Water Improvements				N
22	**Yellow Creek State Park**		**$10,733**	**$126,092**	**11.7**	Y
		Lighting Improvements - LED Upgrades				Y
		Building Weatherization and Insulation Improvements				Y
		Domestic Water Improvements				N

PA GESA - DCNR Western PA - Region 2

SUMMARY OF PROJECT COSTS FOR EACH DCNR LOCATION

Location	Building ECM Group	ECM	TOTAL SAVINGS $/yr	ECM Budget	Simple Pay Back	Include Y=yes, N = No)
23	**Forbes Forest District**		**$10,873**	**$293,749**	**27.0**	Y
		Lighting Improvements - LED Upgrades				Y
		Building Weatherization and Insulation Improvements				Y
		Domestic Water Improvements				N
		Install New Programmable Thermostats				Y
		Replace Boiler				Y
		Replace Existing Furnace and Install New Unit Heater				Y
24	**Gallitzin Forest District**		**$3,179**	**$48,244**	**15.2**	Y
		Lighting Improvements - LED Upgrades				Y
		Building Weatherization and Insulation Improvements				Y
		Domestic Water Improvements				N
25	**Clear Creek Forest District**		**$5,364**	**$71,025**	**13.2**	Y
		Lighting Improvements - LED Upgrades				Y
		Building Weatherization and Insulation Improvements				Y
		Domestic Water Improvements				N
26	**Cornplanter Forest District**		**$6,180**	**$119,825**	**19.4**	Y
		Lighting Improvements - LED Upgrades				Y
		Building Weatherization and Insulation Improvements				Y
		Domestic Water Improvements				N
		Replace Boiler in Office				Y
27	**DCNR Region 2 Office**		**$1,265**	**$16,530**	**13.1**	Y
		Lighting Improvements - LED Upgrades				N
		Building Weatherization and Insulation Improvements				Y
		Domestic Water Improvements				N
		TOTALS	**$302,723**	**$5,533,648**		

ESG ENERGY SYSTEMS GROUP
Building Performance with Energy

INNOVATIVE ENERGY SOLUTIONS

ESG ENERGY SYSTEMS GROUP

BENEFITS:

REDUCE OPERATING COSTS

REBUILD AGING INFRASTRUCTURE

MODERNIZE OLD BUILDINGS

IMPROVE COMFORT AND PRODUCTIVITY

BECOME ENERGY EFFICIENT

LOWER GREENHOUSE GAS EMISSIONS

REDUCE CARBON FOOTPRINTS

BECOME GREEN

WWW.ENERGYSYSTEMSGROUP.COM



GOVERNMENT



HIGHER EDUCATION



K-12 EDUCATION



COMMERCIAL



HEALTHCARE



RENEWABLE ENERGY

III - Scope of Work / ECMs

©2011 Energy Systems Group, LLC

SCOPE OF WORK AND GENERAL CONDITIONS

This document details the scope of work for the measures listed in the table below.

Overview
Energy Systems Group (Contractor) shall provide necessary engineering (mechanical, electrical, and structural), labor/subcontractors, supervision, equipment, material, start-up and commissioning, testing and balancing, and coordination between all trades, as required to accomplish the described work.

ESG's DCNR Project Team consists of highly-qualified and experienced project managers, construction managers, engineers, and installers in the energy services industry. Each member of this team has a diverse background in Guaranteed Energy Saving Agreement Projects (GESA Projects), construction, and customer satisfaction. This allows us to provide an experienced and process-oriented team committed to delivering quality projects with Customer satisfaction as their key focus.

Our project approach is to work closely with the facility security and maintenance personnel to understand the operational procedures of the facility and then develop an accurate schedule to fully abide by the safety and security requirements.

All work shall be performed using new materials, in a professional, workmanlike manner to provide a complete and operable installation. All materials provided shall be manufactured by a reputable organization regularly engaged in manufacturing said products.

All labor provided shall be by professionals, regularly performing work in their given trade. The Contractor shall immediately remove from the site any of its employees, or its subcontractors' employees that are deemed incompetent, careless, insubordinate or otherwise undesirable. The Contractor shall employ at all times a sufficient number of workmen with sufficient equipment and proper materials required to execute the work in a diligent and expeditious manner.

The Contractor shall be responsible for applicable safety, code and health standard compliance and shall provide and maintain a clean, safe working environment at all times. No hazardous conditions shall be permitted during or following any daily activity by the Subcontractors. The Contractor shall comply with OSHA and State-equivalent standards and requirements. The Contractors shall have a safety plan prior to starting work addressing the work involved.

The Contractor shall provide engineering plans and specifications as needed for the proposed work for the approval of DGS/DCNR prior to proceeding with the work.

The Contractor shall be responsible for coordinating with selected equipment manufacturers for rigging, piping and electrical layouts, connection points and requirements.

The Contractor shall provide off-site disposal as required to perform work outlined in this scope of work.

The Contractor shall provide all penetrations as required to install equipment and piping associated with the work outlined in this scope of work. All penetrations shall be performed in a professional, neat, and workmanlike manner. The Contractor shall provide all patching, fire stopping, painting, and repairs required to restore any areas worked upon or damaged to match surrounding conditions.

All work shall be performed in accordance with all applicable Local, State, and Federal codes, Policy and Procedure.

©2013 Energy Systems Group, LLC

The contractor is not responsible for correcting any precontract code issues. The contractor will notify Owner of any code violations discovered in the course of performing the work.

The Contractor shall develop a detailed schedule and shall meet with the Owner and to provide the necessary detailed information to properly depict activities, including progress and duration, prior to starting any work. This information will clearly identify associated dates of work required from another subcontractor or the Owner. Schedule shall be provided within thirty (30) days of Owners written notice to proceed. The Contractor may modify and change the schedule from time to time, as it deems appropriate, in accordance with actual performance conditions. The Project schedule shall be subject to Owner approval and may be adjusted per the Owner's requirements.

The Contractor shall provide its own equipment, including scaffolding, ladders, and hoists, do its own cleanup, and repair or replace damaged, defective and defaced work caused by its own negligence. The Contractor shall continuously clean up and remove from the site all of its rubbish, debris, etc. on a daily basis, unless the Owner directs otherwise. Upon completion of the Contractor's work, all Contractors' materials, equipment, etc. must be immediately removed from the job site by the Contractor. Upon completion of the work, the Contractor shall thoroughly clean all work areas, surfaces, and equipment and make ready for Owner occupancy.

The Contractor shall create, keep and maintain, on-site, complete installation engineering documents. The Contractor shall mark up the engineering documents to portray as-installed conditions, depicting routings, circuits, changes in the work, and interfacing with existing. Upon completion, the marked-up set of site documents shall be turned into as-built documents and submitted to the Owner.

Six (6) copies of Operation and Maintenance (O&M) manuals and electronic copies for all major material and equipment supplied by the Contractor and shall be provided upon project completion, and prior to final payment.

The Contractor shall provide all required permits, and provide, schedule, and attend all required inspections.

The Contractor shall provide demolition and disposal of old equipment and all associated pipe, conduit, wire, devices, etc.

The Contractor shall provide equipment receiving, storage (off-site if required), transportation from/to site, rigging into place, setting, housekeeping pads (new or modified as required) shall be provided where required.

Overall Assumptions and exclusions: Apply to all scopes
The following general assumptions and exclusions apply to all scopes, except where explicitly included in the scope of work.

- In the case of conflict between this scope of work and the ESG drawings, the written scope of work will govern.
- Existing air (e.g., duct) and water (e.g., piping) distribution systems are in good condition and are sized adequately to supply heating and cooling air/water from the proposed new units.
- Existing controls, valves, dampers, safeties and wiring, if reused, are assumed to be functional.
- Any scope not explicitly outlined is excluded.
- Any existing infrastructure we propose to reuse is assumed to be in good working condition and hence not included in the proposed scope of work.

©2013 Energy Systems Group, LLC

- Existing electrical system that is reused is adequate for new equipment and otherwise assumed to be in good condition and suitable for interconnection.
- ESG has not included, in the scope, replacement of defective electrical wiring or bringing any existing wiring up to current code, except where indicated.
- Unless specifically noted and included in the scope, ESG has assumed that existing structure and load bearing capability are adequate. Any structural evaluation or strengthening not specifically identified in scope has been excluded.
- ESG will cover HAZMAT abatement in immediate area of work being performed, as required to perform the ESG scope of work. Any abatement scope not specifically outlined is excluded from ESG's scope. Hazmat includes, but not limited to, mold, lead, asbestos, etc.

Warranty – General Condition
Energy Systems Group (ESG) hereby warrants to Owner that all materials and workmanship furnished by ESG, in connection with the Project, shall be in accordance with the general industry standards of the mechanical and electrical construction industry; shall be performed in a competent, good and workmanlike manner and in compliance with the Contract Documents, and all pertinent laws, rules and regulations; and, shall be free from any and all faults or defects in material and workmanship. ESG shall promptly remedy any and all defective materials or workmanship furnished by ESG or any of their subcontractors upon receipt of written notice thereof from Owner. If required by Owner, ESG shall furnish satisfactory evidence as to kind and quality of materials and equipment used in connection with the Project. All warranties assume the equipment is operated and maintained in accordance with the manufacturer's instructions.

The warranty set forth herein shall continue to be effective for a period of **one (1) year** from the Substantial Completion date except where noted otherwise. The owner shall give ESG written notice of all defective work, specifically detailing the deficiencies to be corrected, and ESG shall repair or otherwise remedy such defective work in an expeditious manner.

Manufacturer material warranties will be provided by the manufacturer on a pass-through basis.

ESG MAKES NO OTHER WARRANTIES, EXPRESS OR IMPLIED, INCLUDING BUT NOT LIMITED TO THE IMPLIED WARRANTIES OF MERCHANTABILITY OR FITNESS FOR A PARTICULAR PURPOSE.

The warranty information provided here is for information only. Final warranty terms and conditions will be in accordance with the O&M manual provided at the end of the construction phase.

©2013 Energy Systems Group, LLC

ENERGY CONSERVATION MEASURES INCLUDED IN PROJECT

Listed in the table below are the three Base Project Energy Conservation Measures (ECMs) (Lighting, Building Envelope and Water Conservation), as well as, the additional DCNR "Wish List" ECMs which DCNR wanted to include in the project:

DCNR GESA PROJECT ENERGY CONSERVATION MEASURES

Note: a more in-depth scope of work for each ECM listed above is provided in the following section:

Base Project		
#	**ECM**	**ECM Description**
1	Lighting Improvements - LED Upgrades	Upgrade existing light fixtures to LED - Replace linear fluorescent with linear LED - Replace incandescent with LED - Replace compact fluorescent with LED
2	Building Weatherization and Insulation Improvements	Weatherization - Replace weather-stripping on doors and windows in select buildings at 24 Parks Building insulation - Add or replace attic and wall insulation in select buildings at 14 Parks Mechanical insulation - Replace or add insulation on piping and ductwork in select buildings at 13 Parks
3	Water Conservation	Install water conserving fixtures at Presque Isle State Park and Point State Park
Tom Ridge Environmental Center		
#	**ECM**	**ECM Description**
TREC-1	Correct Excessive Air Pressure in Tower	Install static pressure differential sensor to monitor the static pressure of Observation Tower in relation to main building and modify control sequences to stage exhaust fans as needed for temperature control. In addition, install one (1) new 2-way control valve on unit heaters to control heating of the observation tower.
TREC-2	Replace Failed Fan Powered Boxes	Replace fifty-one (51) under-floor fan powered Variable Air Volume boxes.
TREC-3	Adding individual Private Temperature Controls	In select areas where multiple individual offices are conditioned by 1 Variable Air Volume Box, add thermostats to each office for better control of the VAV. Total of fifteen (15) new thermostats.
TREC-4	Relocate Thermostats Located on Outside Walls	Remove thermostats located on exterior walls and install seven (7) wireless thermostats.
TREC-7A	Replace Exterior Air Handling Unit-AHU 3 Only	Replace AHU 3 - 40 Ton Capacity - Replace Remote Condenser - Reuse existing fan which appears in good working order. - Modify ductwork as needed to accommodate design of new unit
TREC-7B	Replace Heat Recovery Wheels on AHU 1 and 2	Replace Heat Recovery Wheels on AHUs 1 and 2.
REC-8	Implement Occupied/Unoccupied Temperature Control	Implement and optimize AHU control schedule for AHUs 1 and 2.

©2013 Energy Systems Group, LLC

DCNR GESA PROJECT ECMs (CONT)

Tom Ridge Environmental Center		
#	**ECM**	**ECM Description**
TREC-9A	Replace Failed Water Heater	Replace water heater that has a burned out heat exchanger and correct exhaust vent issues
TREC-10	Install VFD on Pumps	Add Variable Frequency Drives to two (2) 10 HP hot water pumps and install differential pressure sensor for control.
Presque Isle State Park		
#	**ECM**	**ECM Description**
PISP-3	Replace Unit Heaters and Install New Radiant Tube Heating System In Maintenance Building	Replace two (2) existing unit heaters with infrared heaters.
Forbes Forest District		
#	**ECM**	**ECM Description**
FFD-1	Install New Programmable Thermostats	Install new programmable thermostats in Park office for 5 HVAC units. The thermostats will control forced air and baseboard heat.
FFD-2	Replace Boiler	Pondfield Maintenance Building - Replace existing boiler with new 133,000 MBH boiler - Install new exhaust to correct code issues
FFD-3	Replace Existing Furnace and Install New Unit Heater	Mt. Davis Maintenance Building - Replace existing oil fired furnace with new unit for office and shop area - Install new exhaust to correct code issues - Install new oil fired unit heaters in garage
Cornplanter Forest District		
#	**ECM**	**ECM Description**
CFD-1	Replace Boiler in Office	- Replace existing boiler - Install new exhaust to correct code issues
Point State Park		
#	**ECM**	**ECM Description**
PSP-1	Replace Upward Lighting in the Portal Bridge to LED	Replace upward lighting in the Portal Bridge to LED
PSP-2	Remove the Four (4) 1000 Watt Metal Halide Lights and Retrofit with LED fixtures at Bath and Pump House	Remove the four (4) 1000 Watt metal halide lights and retrofit with LED fixtures at Bath and Pump House
PSP-3	Remove Eighteen (18) Center Column 1000 Watt Halogen Lamps and Retrofit them with LED Lamps	Remove eighteen (18) center column 1000 Watt halogen lamps and retrofit them with LED lamps

©2013 Energy Systems Group, LLC

DCNR GESA PROJECT ECMs (CONT)

Moraine State Park		
#	**ECM**	**ECM Description**
MSP-1	Install Remote Heating Control for 11 Modern Cabins	Install WiFi Enabled Programable Thermostats on all electric baseboard heaters in eleven (11) Modern Cabins.
MSP-2	Replace Oil Furnace at Park Office	- Replace existing furnace - Install new exhaust to correct code issues
MSP-3	Replace Doors and Windows at two Maintenance Buildings	Replace doors and windows at two (2) maintenance buildings
MSP-4	Install Instantaneous Hot Water Heaters at Modern Cabins	Replace existing storage style hot water heaters in eleven (11) Modern Cabins with instantaneous water heaters.
Pymatuning State Park		
#	**ECM**	**ECM Description**
PYSP-1	Replace Oil Boiler with Propane Boiler at Jamestown Maintenance	- Remove existing boiler - Install concrete pad and piping for new propane tank location - Install new boiler in new location and connect piping to existing systems - Install new exhaust stack - Install new propane fired infrared heaters in garage bays
PYSP-2	Replace Oil Boiler with Propane Boiler at Park Office	- Remove existing boiler - Install concrete pad and piping for new propane tank location - Install new boiler in new location and connect piping to existing systems - Install new exhaust stack

Note: a more in-depth scope of work for each ECM listed above is provided in the following section

©2013 Energy Systems Group, LLC

ECM 1: LIGHTING IMPROVEMENTS – LED UPGRADES

Existing Conditions and ECM Description

ESG investigated the lighting system of each building. During this comprehensive investigation, it was found that a significant number of lighting fixtures utilize older lighting technologies and will benefit from upgrades. Improvements to lighting will reduce electrical consumption while maintaining or improving the quality of light. The costs of material and labor to maintain the current systems will also be reduced since these renovations will replace some items (i.e. lamps and ballasts) that are near the end of their life cycle with components capable of a longer life.

ESG recommends the installation of LED lighting, where appropriate. DCNR will benefit in the following areas:

- Enhanced lighting performance
- Energy savings
- Silent, flicker-free operation
- Cooler operation
- Five-year warranty
- Lower maintenance costs
- Capital cost avoidance

Cabin/Living Spaces – Lighting inCabin/Living Space areas is mixed with Compact Fluorescent/Incandescent (CFL) screw-in fixtures. These are recommended to be retrofited with LED screw-in lamps. The fluorescent tube fixtures are recommended to be retrofit with the Keystone LED T8 direct wire tubes unless there are damaged/missing lenses, where the fixtures will be replaced as needed. This retrofit will achieve between 50% and 80% energy savings over the existing T8/T12 lighting systems. There is also a fairly large amount of LED Screw-In fixtures as well. It is our recommendation that these fixtures be left entirely as-is and not retrofitted.

Maintenance – Existing lighting in Maintenance areas is mostly made up of T8/T12 fluorescent fixtures. The fluorescent tube fixtures are recommended to be retrofit with the Keystone LED T8 direct wire tubes unless there are damaged/missing lenses, where the fixtures will be replaced as needed. This retrofit will achieve between 50% and 80% energy savings over the existing T8/T12 lighting systems. These areas also contain additional CFL and incandescent screw-in lighting fixtures. These fixtures will also be retrofit with LED technology. There are also LED exit signs that are not recommended for retrofit.

Admin/Offices – Admin/Office lighting is primarily T8/T12 fluorescent fixtures. These fixtures are recommended to be retrofited with the Keystone LED T8 direct wire tubes. This retrofit will achieve between 50% and 80% energy savings over the existing T8/T12 lighting systems. There are also circline fixtures as well that cannot be retrofit with LED T8 direct wire tubes. In this case, the entire fixture will be removed, ballast and fluorescent tubes included, and replaced with a brand-new fixture that contains new LED lamps. These areas also contain additional CFL and incandescent screw-in lighting fixtures. These fixtures will also be retrofit with LED technology. There are also Incandescent and LED exit signs in these areas. The incandescent exit signs will be replaced with new LED exit signs, and the existing LED signs will not be retrofited.

©2013 Energy Systems Group, LLC

Comfort Station/Shower/Restroom Areas – Comfort Station, Shower, and Restroom areas are lit by a combination of CFL/incandescent Screw-In, LED and T8/T12 linear fluorescent fixtures. In the applications where linear T8/T12 fixtures exist, we are recommending the fixture be retrofitted with Keystone LED T8 direct wire tubes. This retrofitted will see energy savings of 50% or more. There are also circline fixtures as well that cannot be retrofitted with LED T8 direct wire tubes. In this case, the entire fixture will be removed, ballast and fluorescent tubes included, and replaced with a brand-new fixture that contains new LED T8 lamps. Damaged and fixtures missing lenses will be replaced as needed. The CFL/Incandescent fixtures will either be retrofitted with LED technology or replaced with a new LED fixture where necessary.

Retail/Food Areas – The Retail/Food areas are mostly made up are lit by a combination of CFL/Incandescent Screw-In, LED and T8/T12 linear fluorescent fixtures. In the applications where linear T8/T12 fixtures exist, we are recommending the fixture be retrofitted with Keystone LED T8 direct wire tubes. This retrofitted will see energy savings of 50% or more. There are also circline fixtures as well that cannot be retrofitted with LED T8 direct wire tubes. In this case, the entire fixture will be removed, ballast and fluorescent tubes included, and replaced with a brand-new fixture that contains new LED lamps. Damaged and fixtures missing lenses will be replaced as needed. The CFL/incandescent fixtures will either be retrofitted with LED technology or replaced with a new LED fixture where necessary. There are also Incandescent and LED exit signs in these areas. The incandescent exit signs will be replaced with new LED exit signs, and the existing LED signs will not be retrofitted.

Water/Recreation/Information Areas – Very similar to the Retail/Food Areas, the Water/Recreation/ Information areas are mostly made up of a mixture of CFL/Incandescent Screw-In, LED and T8/T12 linear fluorescent fixtures. In the applications where linear T8/T12 fixtures exist, we are recommending that the fixture be retrofitted with Keystone LED T8 direct wire tubes. This retrofitted will see energy savings of 50% or more. There are also circline fixtures as well that cannot be retrofitted with LED T8 direct wire tubes. In this case, the entire fixture will be removed, ballast and fluorescent tubes included, and replaced with a brand-new fixture that contains new LED lamps. Damaged fixtures and fixtures missing lenses will be replaced as needed. The CFL/Incandescent fixtures will either be retrofitted with LED technology or replaced with a new LED fixture where necessary. There are also Incandescent and LED exit signs in these areas. The Incandescent exit signs will be replaced with new LED exit signs and the existing LED signs will not be retorfitted.

Exterior – Exterior fixtures throughout the parks are primarily CFL/Incandescent Screw-Ins mixed with HID and LED fixtures. All existing LED fixtures and lamps will be left in place. Existing High Intensity Discharge (HID), CFL and incandescent fixtures will be replaced. CFL/incandescent screw-in fixtures will be re-lamped with LED A19 lamps. All shoebox fixtures will be replaced with a new LED area light resulting in 50% or greater energy savings across the board. In some cases, the energy savings for this replacement will see as high as a 68% reduction in consumption. Existing wall pack fixtures are recommended to be replaced with new LED fixtures resulting in 50% or greater energy savings. Existing flood fixtures are set to be replaced with new LED flood light fixtures.

These LED fixture replacements will not only result in a large electric consumption decrease, but they are all rated for 100,000 hours or more, resulting in incredible maintenance savings with no need to replace the fixtures or components for 10+ years. The superior photometry of LED versus older technologies of lighting, will create better light levels and a more consistent spread at the sites. This will greatly reduce shadowing and increase security at all the sites. Other fixtures such as downlights will be either retrofitted or re-lamped with the appropriate LED lamp or replaced with new fixture.

ESG ENERGY SYSTEMS GROUP
©2013 Energy Systems Group, LLC

Proposed Scope of Work

ESG will provide published prevailing wage electrical and construction labor and supervisory services necessary to install the lighting system upgrades as listed in the appendix. All material cut sheets for products are included in the appendix. ESG agrees to perform the proposed work in a skilled and professional manner in accordance with the highest standards of the industry by personnel skilled in their respective trades.

See Appendix for the detailed lighting line by line audit and proposed recommendations by building.

Existing Conditions & Assumptions

- This proposal assumes that the existing electrical wiring, grounding, existing circuit breakers, and lighting fixtures are in good operating condition and in compliance with existing building and electrical codes. Ungrounded conditions outside of the light fixture or immediate conduit are excluded from the scope of work and are to be corrected by others.

- Any major components or wiring discovered in need of repair shall be noted and submitted to the customer. Any such repairs will be the responsibility of the customer to remedy in a timely manner;

Special O&M Requirements

No additional O&M requirements will be required above current requirements.

- O&M requirements will be listed in the O&M manuals provided in the construction phase.
- Re-lamping and Re-ballasting will be required on a routine basis and are not included in this contract.
- Routine cleaning of fixture lenses to minimize light level depreciations due to dirt to be completed by owner.

Warranty:

- Please refer to the Warranty section of this report.
- All material installed will be covered under the manufacturer's warranties as outlined in their warranty policy and specifications.
- Labor and workmanship are warranted for one year from date of component installation and start of beneficial use (Substantial Completion).
- ESG will provide the manufacturer’s warranty certificates and policies in the Operations and Maintenance Manuals.
- All warranties will be offered on a pass-through basis.

Specific warranty terms and conditions will be in accordance with the O&M manual provided in the construction phase.

©2013 Energy Systems Group, LLC

ECM 2: BUILDING WEATHERIZATION

Existing Conditions
Given the age and use of many of the buildings within the DCNR Region 2, the seals around windows and doors are deteriorating. This is causing an increase in energy use.

ECM Description
ESG evaluated the buildings at the DCNR Region 2 to identify deficiencies in the building envelope. Areas were discovered where envelope upgrades would increase the performance of the existing building system, which in turn will create a more comfortable interior condition and reduce energy usage.

Heating and cooling energy losses occur due to exfiltration and infiltration through deficient building envelopes. Poor weather-stripping around doors and caulking around windows lead to both exfiltration of conditioned air and infiltration of unconditioned outside air which then must be conditioned. Control of air leakage involves the sealing of gaps, cracks and holes using appropriate materials such as fire retardant, polyurethane foam, caulks, and appropriate weather stripping materials.

Proposed Scope of Work
See the Appendix for detailed scope of work and Building Envelope Line by Line.

Special O&M Requirements
No additional O&M requirements will be required above current requirements.

Warranty
Please refer to the Warranty section in the beginning of this report. Specific warranty terms and conditions will be in accordance with the O&M manual provided during the construction phase.

©2013 Energy Systems Group, LLC

ECM 3: WATER CONSERVATION

Existing Conditions

There are only two parks within Region 2 that use water supplied by a local municipality, Point State Park and the Tom Ridge Environmental Center (TREC). The TREC is already using low flow fixtures on the domestic plumbing.

ECM Description

Often, the majority of a facility's water/sewer consumption is through domestic plumbing fixtures. Vast improvements have been made in the design and efficiency of these fixtures over the last decade. Installation of high efficiency toilets (HET), high efficiency urinals (HEU), and piston-type flush valves and other domestic plumbing fixtures can reduce water/sewer consumption by as much as 50-60%, depending on the existing conditions of current equipment.

Proposed Scope of Work

Install new low flow fixtures at Point State Park and Fort Pitt Museum.

See the Appendix for detailed scope of work and Water Conservation Line by Line.

Special O&M Requirements

No additional O&M requirements will be required above current requirements.

Warranty

Please refer to the Warranty section in the beginning of this report. Specific warranty terms and conditions will be in accordance with the O&M manual provided during the construction phase.

©2013 Energy Systems Group, LLC

ECM TREC-1: CORRECT EXCESSIVE PRESSURE IN OBSERVATION TOWER

Existing Conditions

The observation tower located at the Tom Ridge Environmental Center (TREC) is cooled by four exhaust fans that use outside air to maintain space temperature. The fans are located at the top of the tower and pull air through outside air dampers located at the base of the tower. To try to maintain comfortable temperatures in the tower, the fans are staged on, two at a time, based on the deviation of the space temperature from the set point.

One issue that is occurring is any time the fresh air dampers clog with debris such as leaves and grass clippings, the fans begin to pull air from the building instead of from outside. This is causing the first and second floor doors from the building to the tower to be pulled open from the static pressure imbalance and tempered air to be pulled from the main building.

It was also noted that the unit heaters located on the bottom level are controlled by staging the heater fans on and off based on a thermostat mounted on the unit.

ECM Description

ESG recommends that will control sequence be modified, to stage the fans one at a time, based on space temperature. There should also be a differential pressure sensor installed to monitor the pressure between the observation tower and the main building. This sensor will limit the number of fans that are staged on to prevent negative pressure in the tower.

Additionally, a control valve be placed on the hot water supply line that serves the unit heaters and controls the operation of the valve based on space temperature.

Proposed Scope of Work

- Eliminate the existing zone valve and dial thermostat control in each of five (5) heating units.
- Install new 2” motorized valve in main HW line to tower heating units with new wall thermostat control located on observation level.
- Install three (3) in-line fans; quantity one each located at each shaft, suspended above heating units. Each unit will include a supply duct to force air up the shaft with a separate intake duct located at ceiling above heaters.
- In-line fans will be controlled to come on when heat is energized.
- Change sequence of operation to stage fans based on the following table. If the pressure in the observation tower begins to go negative, the maximum number of fans should be lowered until the pressure is neutral to the main building.

Space Temperature Deviation from Set Point	Number of Fans
+1 Deg F	1
+3 Deg F	2
+6 Deg F	3
+10 Deg F	4

©2013 Energy Systems Group, LLC

Special O&M Requirements

Training will be provided to facility staff in order to review the new sequence of operation and to properly make adjustments if needed.

Implementing an optimized schedule will require that facility staff be properly trained to implement and adjust the schedule properly.

O&M requirements will be listed in the O&M manuals provided in the construction phase.

Regular inspections to confirm performance and maintenance of mechanical components are required.

Warranty

Please refer to the Warranty section in the beginning of this report. Specific warranty terms and conditions will be in accordance with the O&M manual provided during the construction phase.

©2013 Energy Systems Group, LLC

ECM TREC-2: REPLACE FAN POWERED VAV BOXES

Existing Conditions

The main exhibit hall and the 1st and 2nd floors of the office space are conditioned by Variable Air Volume (VAV) air handling units (AHUs). The air is distributed under a raised floor and the individual zone temperatures are maintained by VAV terminal units with hot water reheat coils located under the raised floor. Due to the age of the terminal units, many of them have required replacement of fan motors, damper actuators, and hot water valve actuators, due to the failure of these components. Access to these units requires the relocation of desks, partition walls, or exhibit displays. In addition in some cases the carpet sections must be removed before the 2' x 2' floor panels can be removed. These floor panels require a special tool to remove and weigh in excess of 10 pounds per panel. To access a single VAV unit for repair, 3-4 floor panels must be removed.

ECM Description

Due to the difficulty of access for maintenance and the failure rate of components, it is recommended that all older underfloor VAV units be replaced with new VAVs

Proposed Scope of Work

Existing VAV Box Quantity					
Unit Tag	**Qty**	**Manufacturer**	**Model**	**Fan CFM**	**Motor HP**
FPT-1	7	York	MFT-A	150	1/10
FPT-2	19	York	MFT-B	300	1/10
FPT-3	25	York	MFT-C	600	1/6

- Remove existing (51) VAV boxes.
- Install new (51) VAV boxes.
- Provide test and balancing of new VAV boxes.
- Connect to existing Building Automation System.

Special O&M Requirements

O&M requirements will be listed in the O&M manuals provided in the construction phase.

Warranty

Please refer to the Warranty section in the beginning of this report. Specific warranty terms and conditions will be in accordance with the O&M manual provided during the construction phase.

©2013 Energy Systems Group, LLC

ECM TREC-3: ADD INDIVIDUAL PRIVATE TEMPERATURE CONTROLS

Existing Conditions

There are several spaces in the office area where one VAV terminal unit, controlled by one thermostat, serves to condition multiple offices. In addition, there are several common areas where multiple VAV terminal units condition the area dependent upon one thermostat for total control. This often leaves offices and spaces with inadequate heating and cooling based on the location of the existing thermostats.

ECM Description

This ECM will add additional temperature sensors and thermostats to offices and common areas to provide better control of the VAV units.

Proposed Scope of Work

- For areas where one VAV unit serves multiple offices with one thermostat: Add additional room temperature sensors to other offices and sequence controls to use the average temperature of the spaces to control the respective VAV unit. Install wireless temperature sensors where required. To be performed for five VAV units (five additional temperature sensors).
- For areas where multiple VAV units serve common areas, all controlled with one thermostat: Add additional space temperature sensors so that each VAV unit is controlled from its own thermostat. Install wireless temperature sensors where required. To be performed for eight areas currently servied by 18 VAV units (ten additional temperature sensors).

Special O&M Requirements

O&M requirements will be listed in the O&M manuals provided in the construction phase.

Warranty

Please refer to the Warranty section in the beginning of this report. Specific warranty terms and conditions will be in accordance with the O&M manual provided during the construction phase.

©2013 Energy Systems Group, LLC

ECM TREC-4: RELOCATE THERMOSTATS LOCATED ON OUTSIDE WALLS

Existing Conditions
There are currently several areas where the thermostat is located on the outside wall of the building. This allows for the possibility of outside temperature to affect the temperature the thermostat reads.

ECM Description
Relocate thermostats located on outside walls to an interior space within the same control area.

This will allow for better temperature monitoring and control of the spaces.

Proposed Scope of Work
Relocate thermostats located on outside walls to interior spaces. In areas where the only suitable location is a steel column, wireless thermostats will be used. Total of seven thermostats will be relocated.

Special O&M Requirements
O&M requirements will be listed in the O&M manuals provided in the construction phase.
Regular inspections to confirm performance and maintenance of mechanical components are required.

Warranty
Please refer to the Warranty section in the beginning of this report. Specific warranty terms and conditions will be in accordance with the O&M manual provided during the construction phase.

©2013 Energy Systems Group, LLC

ECM TREC-7A: REPLACE EXTERIOR AIR HANDLING UNIT, AHU 3 ONLY

Existing Conditions

AHU 3 conditions the lab spaces in the basement of the TREC

AHU-3
Location: Behind exhibit hall.
Serves: Basement Lab area.
Manufacturer: AHU: SEMCO; DX cooling unit: Mammoth.
Capacity: 40 Ton.
Variable air Volume or Constant Air Volume: Constant air volume unit.
Heating type: Hot water coil with hot water being supplied by boilers located in basement mechanical room.
Cooling type: DX cooling coil with air cooled condensers. Compressors and condensor are separate from AHU.
Other: Contains heat recovery wheel to reclaim heat from exhaust air stream. Exhaust fan is a vertical high velocity discharge fan for exhaust of the lab hoods.
Condition: Fans, compressors, and cooling tower have been well maintained by TREC staff but the unit is at the end of its useful life. The heat recovery wheel is nonfunctional and is in need of complete replacement.

ECM Description

This ECM will replace AHU 3 with a newer, more efficient unit. The new unit shall be a SEMCO with an AAON Model CF Condenser or similar.

Proposed Scope of Work

- Replace existing SEMCO HVAC-3 unit and Mammoth 40 ton DX condenser unit with new SEMCO unit of same specification with new AAON 40 ton condenser unit or similar.
- Reconnect supply and return ducting with new insulated sheet metal ducting.
- Reconnect high voltage and control wiring to new units.
- Reconnect chilled water to new unit with new pipe, fittings and insulation.
- Install new insulated copper refrigerant lines to connect HVAC unit to new condenser unit.
- Reuse existing exhaust fan assembly.
- Perform air test and balance of new installed unit.

Special O&M Requirements

O&M requirements will be listed in the O&M manuals provided in the construction phase.
Regular inspections to confirm performance and maintenance of mechanical components are required.

Warranty

Please refer to the Warranty section in the beginning of this report. Specific warranty terms and conditions will be in accordance with the O&M manual provided during the construction phase.

©2013 Energy Systems Group, LLC

ECM TREC-7B: REPLACE HEAT RECOVERY WHEELS ON AHUs 1 AND 2

Existing Conditions

The heat recovery wheels on AHUs 1 and 2 have reached the end of their service life and are no longer operating as efficiently as they should.

AHU-1
Location: Behind exhibit hall.
Serves: Main exhibit hall.
Manufacturer: AAON.
Capacity: 70 Ton.
Variable air Volume or Constant Air Volume: VAV with variable frequency drive on fans.
Heating type: Hot water coil with hot water being supplied by boilers located in basement mechanical room.
Cooling type: DX cooling coil with water cooled condensers. Compressors and cooling tower are contained within the unit.
Other: Contains heat recovery wheel to reclaim heat from return air stream.
Condition: Fans, compressors, and cooling tower are well maintained and in good operating condition. The heat transfer media used in the heat recovery wheel has reached the end of its useful life and is need of replacement.

AHU-2
Location: Behind office building.
Serves: 1st and 2nd floor of office building.
Manufacturer: AAON.
Capacity: 45 Ton.
Variable air Volume or Constant Air Volume: VAV with variable frequency drive on fans.
Heating type: Hot water coil with hot water being supplied by boilers located in basement mechanical room.
Cooling type: DX cooling coil with water cooled condensers. Compressors and cooling tower are contained within the unit.
Other: Contains heat recovery wheel to reclaim heat from return air stream.
Condition: Fans, compressors, and cooling tower are well maintained and in good operating condition. The heat transfer media used in the heat recovery wheel has reached the end of its useful life and is need of replacement.

ECM Description

Replace the heat recovery wheels on AHUs 1 and 2. This will increase the heat transfer efficiency of the units.

Proposed Scope of Work

For each AHU

- Remove existing heat wheel.
- Replace with new heat wheel provided by AAON, or similar, to match unit.

Special O&M Requirements

O&M requirements will be listed in the O&M manuals provided in the construction phase.
Regular inspections to confirm performance and maintenance of mechanical components are required.

Warranty

Please refer to the Warranty section in the beginning of this report. Specific warranty terms and conditions will be in accordance with the O&M manual provided during the construction phase.

©2013 Energy Systems Group, LLC

ECM TREC-8: IMPLEMENT OCCUPIED/ UNOCCUPIED TEMPERATURE CONTROL

Existing Conditions

The existing Building Automation System (BAS) is manufactured by Johnson Controls Inc. (JCI). The current schedule has the AHUs with the following operating times.

Unit	Schedule
AHU-1	5 AM to 12 AM; 7 days a week
AHU-2	24 hours a day; 7 days a week
AHU-3	24 hours a day; 7 days a week

The current schedule also does not allow for system setback during holidays.

ECM Description

This ECM will implement a schedule for each AHU that will accommodate the temperature requirements for each space that each AHU serves. The BAS system has the capability to implement an optimized Start/Stop scheduling sequence. This algorithm analyzes the current indoor and outdoor conditions to determine when each AHU should be turned on in order to meet the temperature set point by the time the building is scheduled to be occupied.

Proposed Scope of Work

Implement an optimized start/stop schedule to accommodate the following space occupancy requirements.

Unit	Occupied Schedule
AHU-1	10 AM to 5 PM; 7 days a week
AHU-2	7:30 AM to 5 PM; 5 days a week
AHU-3	24 hours a day; 7 days a week

The schedule be programmed to operate to the following heating and cooling set points

Season	Occupied Set Point	Unoccupied Set Point
Heating	72 Deg F	65 Deg F
Cooling	74 Deg F	85 Deg F

Additionally, the BAS will be configured to account for holidays.

Coordination with the facility staff will be essential to ensure that schedules that are implemented meet the needs of the building

Special O&M Requirements

Implementing an optimized schedule will require that facility staff be properly trained to implement and adjust the schedule properly.
O&M requirements will be listed in the O&M manuals provided in the construction phase.
Regular inspections to confirm performance and maintenance of mechanical components are required.

Warranty

Please refer to the Warranty section in the beginning of this report. Specific warranty terms and conditions will be in accordance with the O&M manual provided during the construction phase.

©2013 Energy Systems Group, LLC

ECM TREC-9A: REPLACE FAILED WATER HEATER

Existing Conditions
The TREC has two (2) 100 gallon A.O. Smith natural gas fired water heaters for domestic water use, one of the which has a burned out heat exchanger and has been taken out of service.

ECM Description
The failed water heater will be replaced by an instantaneous natural gas fired hot water heater. This heater will utilize the existing hot water tank and hot water system.

Proposed Scope of Work
- Disconnect and remove failed hot water heater.
- Furnish and install a new instantaneous hot water heater capable of 15 GPM manufactured by A.O. Smith or similar
- Connect water heater to supply loop hot water piping.
- Install new exhaust flue

Special O&M Requirements
Training will be provided to facility staff to better understand the new sequence of operation and to properly make adjustments if needed.

O&M requirements will be listed in the O&M manuals provided in the construction phase.
Regular inspections to confirm performance and maintenance of mechanical components are required.

Typical Warranty
Please refer to the Warranty section of this report. Final warranty terms and conditions will be in accordance with the O&M manual provided during the construction phase.

©2013 Energy Systems Group, LLC

ECM TREC-10: INSTALL VARIABLE FREQUENCY DRIVES ON HOT WATER PUMPS

Existing Conditions

There are currently two (2) 10 horsepower pumps that circulate hot water to the AHUs and VAV terminal units throughout the TREC. These pumps currently operate at a constant speed. Only one pump is required for proper operation, with the second pump used as a backup. System pressure is maintained by a bypass valve located in the distribution network. All of the control valves on the AHUs and terminal units are 2-way valves.

ECM Description

This ECM will install a variable frequency drive (VFD) on both pumps. This will allow the pump speed to be modulated to accommodate the hot water flow requirement.

Proposed Scope of Work

- Install two (2) VFDs.
- Replace motors to accommodate new VFDs.
- Close and lock out existing bypass control valve.
- Program VFDs to modulate based on existing pressure sensor.
- VFDs will alternate to equalize run time.
- Perform system balance to determine required pressure set point required.

Special O&M Requirements

Training will be provided to facility staff to better understand the new sequence of operation and to properly make adjustments if needed.

O&M requirements will be listed in the O&M manuals provided in the construction phase.
Regular inspections to confirm performance and maintenance of mechanical components are required.

Warranty

Please refer to the Warranty section in the beginning of this report. Specific warranty terms and conditions will be in accordance with the O&M manual provided during the construction phase.

©2013 Energy Systems Group, LLC

ECM PISP-3: REPLACE UNIT HEATERS AT PARK MAINTENANCE BUILDING

Existing Conditions

The maintenance building at Presque Isle State Park has a large three-bay garage used for storing and maintaining the vehicles utilized by the park. There are currently two (2) natural gas unit heaters in the maintenance building. These heaters do not provide sufficient heat in the winter months. These unit heaters also cannot recover quickly enough when the garage doors are opened in the winter months.

ECM Description

Replace the existing unit heaters with new natural gas fired infrared (IR) unit heaters. This will increase the ability for the heat to recover from open garage doors in the winter as well as provide more energy efficient operation.

Proposed Scope of Work

- Disconnect and remove ceiling hung hot water unit heaters located in the Garage
- Furnish and install four (4) Robert Gordons Vantage Model CTH3-115-30 (115MBH), or similar Natural gas fired IR heaters suspended from ceiling.
- Furnish and install new gas piping from new meter location to new gas IR heaters.
- Furnish and install four (4) sets of new fresh intakes / exhausts for new IR heaters to the outside.
- Furnish and install four (4) Honeywell Wi-Fi programmable low voltage wall thermostats.
- Furnish and install new 110V electrical power wiring from existing unit heater wiring to new IR heaters.

Special O&M Requirements

O&M requirements will be listed in the O&M manuals provided in the construction phase.

Warranty

Please refer to the Warranty section in the beginning of this report. Specific warranty terms and conditions will be in accordance with the O&M manual provided during the construction phase.

©2013 Energy Systems Group, LLC

ECM FFD-1: INSTALL NEW PROGRAMMABLE THERMOSTATS AT FORBE FOREST DISTRICT OFFICE

Existing Conditions

The main office for Forbes Forest District is currently conditioned by five (5) split system HVAC units with natural gas heat and two (2) hot water boilers. The oldest part of the building uses the boilers for hot water radiant heating and one (1) of the split system HVAC units for additional heating load. The building addition that was added in 2005 is conditioned by the remaining four (4) HVAC units with natural gas heat.

During the building survey, several conditions are causing excessive energy and fuel usage. The first is the oldest part of the office. Each room has a thermostat that controls the hot water baseboard heat for that room while the HVAC unit serving that area has its own thermostat. Because the two systems do not share a common thermostat, it is possible to have excess simultaneous heating and cooling taking place at the same time. Also, each of the five HVAC units has an outside air damper that is open when the unit is operating. These dampers are allowing more outside air to enter the building than code requires. This high volume of outside air then needs to be conditioned by the HVAC to maintain set point and uses excess energy to do so.

ECM Description

It is recommended that new programmable thermostats be installed for the five (5) HVAC units. The hot water baseboard heaters should be reconfigured to be controlled by the thermostat for the HVAC unit that serves the same area. A test of the HVAC units should be done to determine the maximum position of the outside air dampers required to provide code level ventilation. This will reduce the simultaneous heating and cooling and reduce the energy needed to condition the outside air.

Proposed Scope of Work

- Install five (5) new programmable Honeywell thermostats.
- Balance five (5) HVAC units to determine maximum outside air damper position.

Special O&M Requirements

Training will be provided to facility staff to better understand the new sequence of operation and to properly make adjustments if needed.

Implementing an optimized schedule will require that facility staff be properly trained to implement and adjust the schedule properly.

O&M requirements will be listed in the O&M manuals provided in the construction phase.

Regular inspections to confirm performance and maintenance of mechanical components are required.

Warranty

Please refer to the Warranty section in the beginning of this report. Specific warranty terms and conditions will be in accordance with the O&M manual provided during the construction phase.

©2013 Energy Systems Group, LLC

ECM FFD-2: REPLACE BOILER AT PONDFIELD MAINTENANCE BUILDING

Existing Conditions

The Pondfield Maintenance building in Forbes Forest district is currently heated by an oil fired hot water boiler and hot water unit heaters. The boiler has reached the end of its service life and is in need of replacement. The current location of the boiler exhaust does not meet current codes and should be corrected.

ECM Description

It is recommended that the existing boiler be replaced with a new unit and install a new exhaust flue to meet current code requirements

Proposed Scope of Work

Shut off, drain and disconnect existing Pennco (120MBH input / 104MBH output) oil fired hot water heating boiler and properly disposed of.

- Furnish and Install Weil McLain model WGO-3 (133,000MBH input / 155MBh output, 85.3% AFUE) high efficiency oil fired hot water heating boiler, or similar.
- Furnish and install two (2) system circulators, new shut off valves, pipe and fittings.
- Furnish and install new 1" fiberglass insulation and fittings for new pipe, valves and fittings installed.
- Furnish and install two (2) new Honeywell Wi-Fi low voltage room thermostats, or similar.
- Furnish and install new expansion tank, automatic air eliminator, automatic water feeder / pressure relief and chemical feeder.
- Furnish and install new stainless steel, oil-fired rated chimney from new boiler up through roof using existing opening with new roof flashing and fittings. Properly flash new chimney flashing to the shingled roof.
- Reconnect existing hot water supply and return piping to new boiler circulators.
- Reconnect feedwater to new boiler.
- Reconnect electrical to new boiler with new shut off switch.
- Furnish and install new Tiger loop oil de-aerator / filter, or similar, to new boiler and reconnect existing oil lines.
- Set new boiler on existing concrete pad.
- Perform Bacharach combustion analysis upon start up for tuning burner to maximum efficiency.

Special O&M Requirements

Training will be provided to facility staff to better understand the new sequence of operation and properly make adjustments if needed.
O&M requirements will be listed in the O&M manuals provided in the construction phase.
Regular inspections to confirm performance and maintenance of mechanical components are required.

Warranty

Please refer to the Warranty section in the beginning of this report. Specific warranty terms and conditions will be in accordance with the O&M manual provided during the construction phase.

©2013 Energy Systems Group, LLC

ECM FFD-3: REPLACE OIL FIRED FURNACE AND INSTALL NEW UNIT HEATER AT MT. DAVIS MAINTENANCE BUILDING

Existing Conditions

The Mt. Davis maintenance building has two main areas, a shop area with office and bathroom, and a garage storage area. The shop area is heated by an oil-fired furnace with a wood burning furnace for back up and supplemental heat. Both of these furnaces are ducted together and the ductwork distributes the heat to the office, bathroom, and shop area. The garage storage area is heated by electric resistance heat with a small diffuser that is fed from the furnace serving the shop and office. The current furnace size is not large enough to adequately heat both sides of the building and the oil-fired furnace has reached the end of its service life. The exhaust flues from both furnaces are also connected to one chimney, which does not meet current building codes.

ECM Description

It is recommended that the existing oil fired furnace be replaced with a new oil fired furnace and install new exhaust flues for the new furnace and existing wood fired furnace. A new oil fired unit heater will be installed in the garage area.

Proposed Scope of Work

Shut off, drain and disconnect existing Pennco (120MBH input / 104MBH output) oil fired hot water heating boiler and properly dispose of and install new 140,000 MBH oil fired unit heater for storage bay.

- Furnish and install Weil McLain model WGO-3 (133,000MBH input / 155MBh output, 85.3% AFUE) high efficiency oil fired hot water heating boiler, or similar.
- Furnish and install two (2) system circulators, new shut off valves, pipe and fittings.
- Furnish and install new 1" fiberglass insulation and fittings for new pipe, valves and fittings installed.
- Furnish and install two (2) new Honeywell Wi-Fi low voltage room thermostats, or similar.
- Furnish and install new expansion tank, automatic air eliminator, automatic water feeder / pressure relief and chemical feeder.
- Furnish and install new stainless steel, oil fired rated chimney from new boiler up through roof using existing opening with new roof flashing and fittings. Properly flash new chimney flashing to the shingled roof.
- Reconnect existing hot water supply and return piping to new boiler circulators.
- Reconnect feedwater to new boiler.
- Reconnect electrical to new boiler with new shut off switch.
- Furnish and install new Tigerloop oil de-aerator / filter, or similar, to new boiler and reconnect existing oil lines.
- Set new boiler on existing concrete pad.
- Perform Bacharach combustion analysis upon start up for tuning burner to maximum efficiency.

Special O&M Requirements

Training will be provided to facility staff to better understand the new sequence of operation and properly make adjustments if needed.
O&M requirements will be listed in the O&M manuals provided in the construction phase.
Regular inspections to confirm performance and maintenance of mechanical components are required.

Warranty

Please refer to the Warranty section in the beginning of this report. Specific warranty terms and conditions will be in accordance with the O&M manual provided during the construction phase.

ESG ENERGY SYSTEMS GROUP
©2013 Energy Systems Group, LLC

ECM CFD-1: REPLACE FURNACES IN CORNPLANTER FORESTY OFFICE

Existing Conditions
The office building in Cornplanter Forest district is currently heated by three (3) forced air furnaces with split system DX coils for cooling. These units have reached the end of their useful life as well as the exhaust stacks which do not meet current code requirements

ECM Description
It is recommended that the existing furnaces be replaced with a new unit and to install a new exhaust flue to meet current code requirements

Proposed Scope of Work
Remove and replace the three (3) existing forced air furnaces.

- Qty. (3) 50MBH Input condensing upflow gas fired furnaces with one (1) 2 ton, one (1) 2.5 ton and one (1) 3 ton high efficiency condensers and evaporator coils.
- Furnish and install three (3) new automatic system humidifiers and (3) high efficiency media air cleaners.
- Furnish and install new PVC vented flue systems piped according to recommended manufacturers installation instructions.
- Furnish and install new condensate piping and pumps to replace existing.
- Reconnect gas lines, electric and low voltage wiring.
- Furnish and install new wall thermostat controls.

Special O&M Requirements
Training will be provided to facility staff to better understand the new sequence of operation and to properly make adjustments if needed.
O&M requirements will be listed in the O&M manuals provided in the construction phase.
Regular inspections to confirm performance and maintenance of mechanical components are required.

Warranty
Please refer to the Warranty section in the beginning of this report. Specific warranty terms and conditions will be in accordance with the O&M manual provided during the construction phase.

©2013 Energy Systems Group, LLC

ECM PSP-1: REPLACE UPWARD LIGHTING IN THE PORTAL BRIDGE TO LED

Existing Conditions

At Point State Park, there is a pedestrian tunnel under the interstate which connects downtown Pittsburgh to the Park. As part of this tunnel there is lighting located along walls that shine up onto the walls. This lighting is currently supplied by compact fluorescent lamps and fixtures.

ECM Description

This ECM would replace the existing lamps and fixtures with new LED Fixtures.

Proposed Scope of Work

- Remove six (6) existing low wattage compact fluorescent fixtures in upward lights under the bridge.
- Install six (6) new LED up lights.

Special O&M Requirements

O&M requirements will be listed in the O&M manuals provided in the construction phase.

Warranty

Please refer to the Warranty section in the beginning of this report. Specific warranty terms and conditions will be in accordance with the O&M manual provided during the construction phase.

©2013 Energy Systems Group, LLC

ECM PSP-2: REMOVE FOUR (4) 1000 WATT METAL HALIDE FLOOD LIGHTS AND REPLACE WITH LED FLOOD LIGHTS

Existing Conditions

On the building housing the public restrooms and on the pump house at Point State Park, there are a total of four (4) 1000 watt metal halide flood lights that provide light for common areas of the park.

ECM Description

This ECM will replace the four (4) metal halide flood lights with LED flood lamps that produce equivalent output. This will result in significant energy savings.

Proposed Scope of Work

- Remove four (4) existing 1000 watt metal halide flood lamps.
- Install four (4) LED flood lamps.

Special O&M Requirements

No additional O&M requirements will be required above current requirements.

Warranty

Please refer to the Warranty section in the beginning of this report. Specific warranty terms and conditions will be in accordance with the O&M manual provided during the construction phase.

©2013 Energy Systems Group, LLC

ECM PSP-3: REPLACE EIGHTEEN (18) 1000 WATT HALOGEN LAMPS IN CENTER OF FOUNTAIN WITH LED LAMPS

Existing Conditions

In the center of the fountain located in Point State Park, there are 1000 watt halogen lamps that illuminate the main jet of the fountain when the fountain is in operation. The other lighting in the remainder of the fountain has already been upgraded to LED with a control system that can change the color of those lights. The eighteen lamps on the main jet have not been upgraded to LED.

ECM Description

This ECM will replace the center 1000 watt halogen lamps to a white LED lamp with equivalent output.

Proposed Scope of Work

- Remove existing 1000 watt halogen lamps.
- Install new LED lamps compatible with existing lighting control system.
- Connect new lamps to lighting control system.

Special O&M Requirements

No additional O&M requirements will be required above current requirements.

Warranty

Please refer to the Warranty section in the beginning of this report. Specific warranty terms and conditions will be in accordance with the O&M manual provided during the construction phase.

©2013 Energy Systems Group, LLC

ECM MSP-1: INSTALL REMOTE HEATING CONTROL FOR 11 MODERN CABINS

Existing Conditions
Each of the eleven (11) modern cabins at Moraine State Park are heated by electric resistance baseboard heat. Each cabin contains 4-6 baseboard heaters, each with their own mechanical thermostat. The mechanical thermostats give the occupants complete control of the baseboard heat and they are often left on when the occupant checks out instead of setting them back to a lower temperature

ECM Description
ESG proposes to install a digital programmable thermostat for each electric baseboard heater. These thermostats can be WiFi enabled to connect to a wireless network for remote control. These thermostats can be locked out to limit the range the set point the occupants can set.

Proposed Scope of Work
- Remove existing high voltage thermostat on each baseboard heater in the modern cabins.
- Install low voltage relay control panel in each modern cabin. In each cabin, each thermostat will control a relay in the control panel to energize and de-energize the respective baseboard heater.
- Install a programmable Honeywell thermostat for each baseboard heater in the modern cabins.

Special O&M Requirements
Training will be provided to facility staff to better understand the new sequence of operation and to properly make adjustments if needed.

Implementing an optimized schedule will require that facility staff be properly trained to implement and adjust the schedule properly.

O&M requirements will be listed in the O&M manuals provided in the construction phase.

Regular inspections to confirm performance and maintenance of mechanical components are required.

Warranty
Please refer to the Warranty section in the beginning of this report. Specific warranty terms and conditions will be in accordance with the O&M manual provided during the construction phase.

©2013 Energy Systems Group, LLC

ECM MSP-2: REPLACE OIL FIRED FURNACE AT PARK OFFICE

Existing Conditions

The park office in Moraine State Park is currently heated by an oil-fired hot water boiler and hot coils in the Air Handling Units (AHUs). The boiler has reached the end of its service life and is need of replacement. The current location of the boiler exhaust does not meet current codes and should be corrected.

ECM Description

It is recommended that the existing boiler be replaced with a new unit and to install a new exhaust flue to meet current code requirements

Proposed Scope of Work

Shut off, drain and disconnect existing Pennco (120MBH input / 104MBH output) oil fired hot water heating boiler and properly dispose of.

- Furnish & install Weil McLain model WGO-3 (191,000 MBh output, 85.3% AFUE) high efficiency oil fired hot water heating boiler, or similar.
- Furnish and install two (2) system circulators, new shut off valves, pipe and fittings.
- Furnish and install new 1" fiberglass insulation and fittings for the new pipe, valves and fittings installed.
- Furnish and install two (2) new Honeywell Wi-Fi low voltage room thermostats, or similar.
- Furnish and install new expansion tank, automatic air eliminator, automatic water feeder / pressure relief and chemical feeder.
- Furnish and Install new stainless steel, oil-fired rated chimney from new boiler up through roof using existing opening with new roof flashing and fittings. Properly flash new chimney flashing to the shingled roof.
- Reconnect existing hot water supply and return piping to new boiler circulators.
- Reconnect feedwater to a new boiler.
- Reconnect electrical to the new boiler with new shut off switch.
- Furnish and install new Tiger loop oil de-aerator / filter, or similar, to new boiler and reconnect existing oil lines.
- Set new boiler on existing concrete pad.
- Perform Bacharach combustion analysis upon start up for tuning burner to maximum efficiency.

Special O&M Requirements

Training will be provided to facility staff to better understand the new sequence of operation and to properly make adjustments if needed.
O&M requirements will be listed in the O&M manuals provided in the construction phase.
Regular inspections to confirm performance and maintenance of mechanical components are required.

Warranty

Please refer to the Warranty section in the beginning of this report. Specific warranty terms and conditions will be in accordance with the O&M manual provided during the construction phase.

©2013 Energy Systems Group, LLC

ECM MSP-3: REPLACE DOORS AND WINDOWS AT TWO MAINTENANCE BUILDINGS

Existing Conditions
The doors and windows at the North and South Maintenance buildings in Moraine State Park are in poor condition and are in need of replacement or repair. The doors and windows no longer seal and the infiltration makes it difficult to heat buildings.

ECM Description
It is recommended that the windows at the North and South Maintenance buildings be replaced and new door sweeps installed on all doors. This will reduce the amount of heat lost during the winter months.

Proposed Scope of Work
- Replace 4 windows in the South Maintenance building.
- Replace and install door sweeps on 28 doors.

Special O&M Requirements
O&M requirements will be listed in the O&M manuals provided in the construction phase.

Warranty
Please refer to the Warranty section in the beginning of this report. Specific warranty terms and conditions will be in accordance with the O&M manual provided during the construction phase.

©2013 Energy Systems Group, LLC

ECM MSP-4: INSTALL INSTANTANEOUS WATER HEATERS IN MODERN CABINS

Existing Conditions
Each of the eleven (11) Modern Cabins at Moraine State Park contains a 30 gallon storage type electric water heater.

ECM Description
ESG recommends installing instantaneous electric water heaters to reduce the standby heat losses from the tank style water heaters

Proposed Scope of Work
- Remove existing water heaters. (typical for 11 Cabins).
- Install new instantaneous water heaters. (typical for 11 Cabins).
- Provide new electrical breaker and wiring required for the new water heaters.

Special O&M Requirements
O&M requirements will be listed in the O&M manuals provided in the construction phase.
Regular inspections to confirm performance and maintenance of mechanical components are required.

Warranty
Please refer to the Warranty section in the beginning of this report. Specific warranty terms and conditions will be in accordance with the O&M manual provided during the construction phase.

©2013 Energy Systems Group, LLC

ECM PYSP-1: REPLACE OIL BOILER WITH PROPANE AT JAMESTOWN MAINTENANCE

Existing Conditions

The Jamestown Maintenance building in Pymatuning State Park is currently heated by an oil fired hot water boiler and hot water unit heaters. The boiler has reached the end of its service life and is need of replacement.

ECM Description

It is recommended that the existing boiler be replaced with a new propane fired unit and to install a new exhaust flue to meet current code requirements. Replace the existing unit heaters with new natural gas fired infrared (IR) unit heaters. This will increase the ability for the heat to recover from open garage doors in the winter as well as provide more energy efficient operation.

Proposed Scope of Work

Shut off, drain and disconnect existing Pennco (120MBH input / 104MBH output) oil fired hot water heating boiler and properly dispose of.

- Furnish and install Weil McLain model WGO-3 (230 MBH input / 196 MBh output, 85.3% AFUE) high efficiency Propane fired hot water heating boiler, or similar.
- Furnish and install two (2) system circulators, new shut off valves, pipe and fittings.
- Furnish and install new 1" fiberglass insulation and fittings for all new pipe, valves and fittings installed.
- Furnish and install two (2) new Honeywell Wi-Fi low voltage room thermostats, or similar.
- Furnish and install new expansion tank, automatic air eliminator, automatic water feeder / pressure relief and chemical feeder.
- Furnish and install new stainless steel, oil fired rated chimney from new boiler up through roof using existing opening with new roof flashing and fittings. Properly flash new chimney flashing to the shingled roof.
- Construct concrete pad for new propane tank.
- Install new propane tank supply line from propane tank to boiler location.
- Reconnect existing hot water supply and return piping to new boiler circulators.
- Reconnect feedwater to a new boiler.
- Reconnect electrical to the new boiler with new shut off switch.
- Set new boiler on existing concrete pad.
- Perform Bacharach combustion analysis upon start up for tuning burner to maximum efficiency.
- Disconnect and remove ceiling hung hot water unit heaters located in the Garage.
- Furnish and install four (4) Robert Gordons Vantage Model CTH3-115-30 (115MBH) Natural gas fired infrared heaters (IR) suspended from ceiling, or similar.
- Furnish and install new gas piping from new meter location to new gas IR heaters.
- Furnish and install four (4) sets of new fresh air intakes / exhausts for new IR heaters to the outside.
- Furnish and install four (4) Honeywell Wi-Fi programmable low voltage wall thermostats, or similar.
- Furnish and install new 110V electrical power wiring from existing unit heater wiring to new IR heaters.

©2013 Energy Systems Group, LLC

Special O&M Requirements

Training will be provided to facility staff to better understand the new sequence of operation and to properly make adjustments if needed.
O&M requirements will be listed in the O&M manuals provided in the construction phase.
Regular inspections to confirm performance and maintenance of mechanical components are required.

Warranty

Please refer to the Warranty section in the beginning of this report. Specific warranty terms and conditions will be in accordance with the O&M manual provided during the construction phase.

©2013 Energy Systems Group, LLC

ECM PYSP-2: REPLACE OIL FIRED BOILER AT PARK OFFICE WITH PROPANE FIRED BOILER

Existing Conditions
The Park office in Pymatuning State Park is currently heated by an oil fired hot water boiler and hot water baseboard heaters. The boiler has reached the end of its service life and is need of replacement.

ECM Description
It is recommended that the existing boiler be replaced with a new propane fired unit and to install a new exhaust flue to meet current code requirements.

Proposed Scope of Work
Shut off, drain and disconnect existing Lennox (210MBH input / 178MBH output) oil fired hot water heating boiler DHW storage tank and properly dispose of. Remove smoke pipe up to roof and cap below the roof, leaving flashing and stack in place; ensure water tightness.

- Furnish and Install Weil McLain model UG-230 (230,000MBH input / 180MBh output, 94% AFUE, 5:1 Turndown) condensing, LP gas fired, wall mounted hot water heating boiler, or similar.
- NOTE: Existing location of the boiler and the hot water heater is not installed according to code for proper service accessibility and is too close to the electrical panel. Therefore, we are proposing to use the adjacent room next to boiler that houses the wind turbine power and gear. Existing Motorola device in the center of the floor will be relocated to where the boiler was located. The new boiler will be relocated to adjacent room and mounted to the wall with separate 30-gallon indirect domestic hot water tank.
- Furnish and install one (1) system circulator, new shut off valves, pipe and fittings.
- Furnish and install new 1" fiberglass insulation and fittings for all new pipe, valves and fittings installed.
- Furnish and install one (1) new Honeywell Wi-Fi low voltage room thermostat, or similar.
- Furnish and install new expansion tank, automatic air eliminator and automatic water feeder / pressure relief.
- Furnish and install new 4" PVC flue venting system to the outside for combustion air and exhaust with concentric vent termination kit. Seal off wall louver to outside.
- Furnish and install new gas piping from outside boiler mechanical room where gas meter is located in a new boiler.
- Reconnect existing hot water supply and return piping and domestic water piping to new boiler and circulator.
- Relocate feedwater piping to a new boiler.
- Furnish and install new electrical from the main panel to new boiler.

Special O&M Requirements
Training will be provided to facility staff to better understand the new sequence of operation and to properly make adjustments if needed.
O&M requirements will be listed in the O&M manuals provided in the construction phase.
Regular inspections to confirm performance and maintenance of mechanical components are required.

Warranty
Please refer to the Warranty section in the beginning of this report. Specific warranty terms and conditions will be in accordance with the O&M manual provided during the construction phase.

©2013 Energy Systems Group, LLC

ESG ENERGY SYSTEMS GROUP



©2011 Energy Systems Group, LLC

www.energysystemsgroup.com

ENERGY SAVINGS GUARANTEE AND M&V PLAN

This section is written and formatted as it is intended to appear in ESG's standard contract with the PA Department of General Services and PA Department of Conservation and Natural Resources. We understand that the M & V plan of the PA DGS GESA contract may be quite different and that the DGS M & V plan will take precedence.

1.0 DEFINITIONS

When used in this Agreement, the following capitalized words shall have the meanings ascribed to them below:

"Acceptance of Installation" means an authorized representative of the DCNR (CUSTOMER) has inspected and accepted that ESG installed Energy Conservation Measures are operational and comply with contract performance requirements and specifications. The CUSTOMER's acceptance shall not relieve ESG from responsibility for continued compliance with contract requirements during the contract term. The Acceptance of Installation shall occur after Substantial Completion.

"**Approval"** means the CUSTOMER has completed a review of submittals, deliverables or administrative documents (e.g., insurance certificates, installation schedules, planned utility interruptions, etc.) and has determined that the documents conform to contract requirements. The CUSTOMER's approval shall not relieve ESG from responsibility for complying with contract requirements.

"**Baseline Period**" is defined as the twelve month period generally from **July 2014 to June 2015** for electric, oil, natural gas, propane, and water.

"Energy Baseline" shall be the energy consumption and costs prior to the installation of the energy conservation measures at the facilities. The baseline will consist of all base year energy bills applicable to the meters in the project. It may also consist of any estimated usage for unmetered energy consumption.

"Energy Conservation Measure (ECM)" is defined as the installation of new equipment/facilities, modification and/or alteration of existing equipment/facilities or rate structures or revised operations and maintenance procedures intended to reduce energy consumption of facilities/energy systems, improve equipment efficiency or provide equipment that complies with existing standards.

"**Energy and Maintenance Savings**" is the sum of the Energy Savings and Operational Savings as defined herein.

©2013 Energy Systems Group, LLC

"**Energy Costs**" shall mean charges for fuel adjustments, base services, transmission, tariffs, and distributions. The Energy Costs will normally be derived or imputed from the facility's utility bills. This method allows for updating savings calculations with changing rate schedules. In the event of a utility rate decrease, the utility rate(s) used to assign dollar cost will not drop below that of the escalated Baseline Period.

"**Facilities**" shall mean those buildings and equipment from which the energy and maintenance cost savings will be realized.

"Final Acceptance Date" shall mean the date all of the ECMs or Measures comprising the Project (as defined in the Agreement) have been delivered, installed, and accepted by the CUSTOMER.

"**First Guarantee Year**" is defined as the period beginning on the first (1st) day of the month following the Final Acceptance Date and ending on the day prior to the first (1st) anniversary thereof.

"**Guarantee Period**" is defined as the period beginning on the first (1st) day of the First Guarantee Year and ending on the last day of the Term.

"**Guarantee Year**" is defined as each of the successive twelve (12) month periods commencing on the anniversary of the commencement of the First Guarantee Year throughout the Term of this Agreement.

"**Guaranteed Savings**" is defined as the amount of Energy and Maintenance Cost Savings.

"Installation Period" is from the date of award to Substantial Completion.

"**Maintenance Costs**" shall include the costs associated with operating and maintaining the Facilities. Examples include the cost of inside and outside labor to repair and maintain systems and equipment, the cost of replacement parts, the cost of deferred maintenance, the cost of lamp and ballast disposal, and the cost of new capital equipment.

"Reporting Period" – Energy Services Guarantee Reports will be provided in Guarantee Years (1 through 3). See Section 8.3 of this Section IV.

"Retrofit Isolation Method" (if applicable to this Project) refers to energy audit methodologies that require pre-retrofit and post-retrofit measurements to isolate energy consumption and costs of specific facility equipment and systems impacted exclusively by this Agreement.

"**Term**" shall be **"20"** years.

"**Total Guarantee Year Savings**" is defined as the amount of Energy and Maintenance Savings realized by Facilities in each Guarantee Year as a result of the Scope of Work in the 04-Section "Energy Conservation Measures"

©2013 Energy Systems Group, LLC

2.0 TERM AND TERMINATION

The Term of this Guarantee shall commence on the first (1st) day of the first month following the date of Final Acceptance of the Work installed pursuant to this Agreement, unless terminated earlier as provided for herein.

3.0 SAVINGS GUARANTEE

3.1 **Guarantee**. ESG guarantees to the CUSTOMER that the Facilities will realize in each Guarantee Year savings in Energy and Maintenance Costs (the "Energy and Maintenance Savings") collectively equal to the amounts shown on Table A below. At the end of the First Three Guarantee Years ESG will present the CUSTOMER with an annual report through the term of the M&V contract. Energy Savings Guarantee Report within ninety (90) days. If there is a shortfall of the Energy Savings in any year, ESG shall provide settlement within sixty (60) days of the acceptance of the report by the CUSTOMER. If the Energy Savings Guarantee has been met or exceeded in each of the first 3 Guarantee Years then the entire Guarantee will be considered met in full, and no further reporting shall be provided.

3.2 **Savings Report.** Within ninety (90) days following the end of each of the 1st three (3) Guarantee Years, ESG will provide the CUSTOMER with an annual report ("Energy Services Guarantee Report"). The CUSTOMER will assist ESG in generating the Energy Services Guarantee Report by authorizing ESG to contact utility companies directly for true copies of all bills pertaining to Energy Costs and Consumption together with access to the CUSTOMER's relevant accounting records, and facilities to monitor any installed equipment relating to such Energy Costs, Consumptions, and Savings pertaining to the Energy Guarantee. Data and calculations utilized by ESG in the preparation of its Cost Savings Energy Services Guarantee Report will be made available to the CUSTOMER, along with such explanations and clarifications as the CUSTOMER may reasonably request. In the event that ESG is not provided immediate access to utility bills from the Utility, ESG will contact a Representative from the CUSTOMER to obtain this information. If there is a delay in receiving the information the ninety (90) day period will be reasonably extended to gain said access.

3.2.2 **Maintenance Savings.** Maintenance savings have been reviewed and accepted by the CUSTOMER and are described in Table A - Savings Guarantee. No further verification is required for these savings. Maintenance savings will begin to accrue on the date of completion and acceptance of each ECM. Details and savings calculations are outlined in Section 9.0 of this Measurement & Verification Plan.

3.3 **Additional Savings.** ESG may identify other Energy and Maintenance Savings opportunities during the construction period or during any Guarantee Year. Additional Energy and Maintenance Savings that can be demonstrated as a result of ESG efforts that result in no additional costs to the CUSTOMER beyond the costs identified in this Agreement will be included in the annual Energy Services Guarantee Report for the applicable Guarantee Year(s).

©2013 Energy Systems Group, LLC

3.4 **Savings Prior to Final Acceptance Date.** All Energy and Maintenance Savings realized by the CUSTOMER that result from activities undertaken by ESG prior to Final Acceptance Date, including any utility rebates or other incentives earned as a direct result of the installed energy conservation measures provided by ESG, will be applied toward all savings shortfalls before payment is made. Energy Savings that are achieved by the upgrades and modifications in the Agreement prior to completion of the entire retrofit project (or construction savings) will be added to the First Guarantee Year Actual Energy Savings amount.

ESG and the CUSTOMER also agree that if the actual annual Energy Savings amount exceeds the Guaranteed Savings amount, such excess Energy Savings amounts will be either:

- Added to the savings for any future year before calculating the savings amount; or
- Billed back to the CUSTOMER up to any amounts paid by ESG for savings shortfalls in a previous year.

3.5 **Cumulation of Savings.** The Guaranteed Savings in each Guarantee Year are considered satisfied if the Total Guarantee Year Savings for such Guarantee Year equals or exceeds the amount identified and determined as set forth in Section 4.0 – Table A. Energy Savings that are achieved by the upgrades and modifications in the Agreement prior to completion of the entire retrofit project (or construction savings) will be added to the First Guarantee Year's actual Energy Savings amount. ESG and the CUSTOMER also agree that if the actual annual Energy Savings amount exceeds the Guaranteed Savings amount, such excess Energy Savings amounts will be either:

- Added to the savings for any future year before calculating the savings amount; or
- Billed back to the CUSTOMER up to any amounts paid by ESG for savings shortfalls in a previous year.

3.6 **Hours and Practices.** To achieve these energy savings, ESG and the CUSTOMER agreed upon the building operating hours located in Section 6.0 of this Exhibit.

3.7 **Activities and Events Adversely Impacting Savings.** The CUSTOMER shall promptly notify ESG of any activities known to the CUSTOMER, which adversely impact ESG's ability to realize the Guaranteed Savings. If this type of situation occurs over the Guarantee Period ESG shall be entitled to reduce its Guaranteed Savings, or make necessary adjustments to the Energy Baseline in order to quantify the changes in the facility. This will allow ESG and the CUSTOMER to recognize and document any such adverse impact to the extent that such adverse impact is beyond ESG's reasonable control.

©2013 Energy Systems Group, LLC

4.0 SAVINGS GUARANTEE

ESG guarantees that the Work will result in the following sum of Total Guaranteed Year Savings over the Term as outlined in Table A:

Table A – Guaranteed Savings

ANNUAL SAVINGS				
Period	Option A and Modified Option A Energy Savings	Agreed-Upon Energy Savings	Agreed-Upon Operational and Maintenance Savings	Total
Construction	$ -	$ 151,362	$ -	$ 151,362
1	$ 215,661	$ 87,062	$ 31,183	$ 333,906
2	$ 217,818	$ 87,933	$ 31,495	$ 337,245
3	$ 219,996	$ 88,812	$ 31,810	$ 340,618
4	$ 222,196	$ 89,700	$ 32,128	$ 344,024
5	$ 224,418	$ 90,597	$ 32,449	$ 347,464
6	$ 226,662	$ 91,503	$ 32,774	$ 350,939
7	$ 228,929	$ 92,418	$ 33,102	$ 354,448
8	$ 231,218	$ 93,342	$ 33,433	$ 357,993
9	$ 233,530	$ 94,276	$ 33,767	$ 361,573
10	$ 235,865	$ 95,218	$ 34,105	$ 365,188
11	$ 238,224	$ 96,171	$ 34,446	$ 368,840
12	$ 240,606	$ 97,132	$ 34,790	$ 372,529
13	$ 243,012	$ 98,104	$ 35,138	$ 376,254
14	$ 245,443	$ 99,085	$ 35,489	$ 380,017
15	$ 247,897	$ 100,075	$ 35,844	$ 383,817
16	$ 250,376	$ 101,076	$ 36,203	$ 387,655
17	$ 252,880	$ 102,087	$ 36,565	$ 391,531
18	$ 255,408	$ 103,108	$ 36,930	$ 395,447
19	$ 257,963	$ 104,139	$ 37,300	$ 399,401
20	$ 260,542	$ 105,180	$ 37,673	$ 403,395
TOTAL TERM	**$ 4,748,644**	**$ 2,068,380**	**$ 686,624**	**$ 7,503,647**

Note: The Guaranteed Energy Savings is for total dollars saved not by Option, fuel type, or building. Escalated Annually based on Table C

©2013 Energy Systems Group, LLC

Table B – Baseline Information

Table B-1 Electric Utilities

Electric Consumption and Cost				
Location	**Building Area**	**kWh Consumption**	**Cost**	**Burdened Electric Rate ($/kWh)**
Clear Creek State Park	25,203	204,994	$23,437.14	$0.1143
Cook Forest State Park	8,400	496,566	$57,497.40	$0.1158
Jennings Environmental Education Center	7,280	72,589	$6,173.29	$0.0850
Keystone State Park	35,609	387,638	$34,851.85	$0.0899
Kooser State Park	16,466	28,976	$28,976.32	$1.0000
Laurel Hill State Park	187,848	553,705	$52,211.92	$0.0943
Laurel Mountain State Park				
Laurel Ridge State Park	17,169			
Laurel Summit State Park	800			
Linn Run State Park	18,913	184,708	$17,019.03	$0.0921
Maurice K Goddard State Park	19,193	132,234	$14,739.67	$0.1115
McConnells Mill State Park	2,990	14,810	$2,073.16	$0.1400
Moraine State Park	96,136	1,032,823	$114,460.44	$0.1108
Ohiopyle State Park	39,113	1,598,482	$66,950.68	$0.0419
Oil Creek State Park	15,399	43,824	$5,406.72	$0.1234
Point State Park	7,200	135,981	$144,198.27	$1.0604
Presque Isle State Park	95,417	1,414,480	$154,648.01	$0.1093
Pymatuning State Park	19,785	693,001	$124,013.84	$0.1790
Raccoon Creek State Park	126,107	582,817	$74,970.86	$0.1286
Ryerson Station State Park	20,419	153,263	$14,121.52	$0.0921
Yellow Creek State Park	49,799	186,697	$25,844.61	$0.1384
Forbes Forest District (FD4)	41,800	29,710	$13,771.46	$0.4635
Gallitzin Forest District (FD6)	16,467	20,911	$5,240.95	$0.2506
Clear Creek Forest District (FD8)	18,263	68,208	$6,789.62	$0.0995
Cornplanter Forest District (FD14)	16,818	2,927	$2,839.50	$0.9701

Notes:
- Laurel Mountain State Park and Laurel Summit State Park are billed to Linn Run State Park
- Laurel Ridge State Park is billed to Laurel Hill State Park
- Baseline data is from July 2014 to June 2015

©2013 Energy Systems Group, LLC

Table B-2 Heating Fuel Utilities

Heating Fuel Consumption and Cost				
Parks	**Building Area**	**Heating Fuel Consumption (kBTU)**	**Heating Fuel Cost ($)**	**Burdened Fuel Rate ($/KBTU)**
Clear Creek State Park	25,203	1,399,412	$24,332.01	$0.0174
Cook Forest State Park	8,400	1,125,198	$11,291.61	$0.0100
Jennings Environmental Education Center	7,280	169,096	$5,162.05	$0.0305
Keystone State Park	35,609	256,450	$3,355.50	$0.0131
Kooser State Park	16,466			
Laurel Hill State Park	187,848	506,322	$19,934.43	$0.0394
Laurel Mountain State Park				
Laurel Ridge State Park	17,169			
Laurel Summit State Park	800			
Linn Run State Park	18,913	236,021	$5,152.92	$0.0218
Maurice K Goddard State Park	19,193	215,289	$2,547.80	$0.0118
McConnells Mill State Park	2,990	75,900		$0.0000
Moraine State Park	96,136	358,800	$12,126.44	$0.0338
Ohiopyle State Park	39,113	296,700	$11,281.98	$0.0380
Oil Creek State Park	15,399	616,967		$0.0000
Point State Park	7,200	2,864	$2,759.74	$0.9635
Presque Isle State Park	95,417	4,676,644	$50,340.85	$0.0108
Pymatuning State Park	19,785	1,145,308	$16,105.69	$0.0141
Raccoon Creek State Park	126,107	659,071	$11,411.32	$0.0173
Ryerson Station State Park	20,419	591,358		$0.0000
Yellow Creek State Park	49,799	182,804	$0.00	$0.0000
Forbes Forest District (FD4)	41,800	511,260	$18,365.69	$0.0359
Gallitzin Forest District (FD6)	16,467	754,722	$8,408.41	$0.0111
Clear Creek Forest District (FD8)	18,263	337,181	$1,037.00	$0.0031
Cornplanter Forest District (FD14)	16,818	48,797	$615.39	$0.0126

Notes:
- Laurel Mountain State Park and Laurel Summit State Park are billed to Linn Run State Park
- Laurel Ridge State Park and Kooser State Park is billed to Laurel Hill State Park
- Baseline data is from July 2014 to June 2015
- Conversion rates based on 102.3 kBTU/CCF for Natural Gas; 138 kBTU/Gallon of #2 Fuel Oil; 92 kBTU/Gallon of Propane

©2013 Energy Systems Group, LLC

Table B-3 Utility Rates

Utility Rates		
Electric	0.092	$/kWh
Heating Fuel	0.0145	$/kBTU

Baseline utility rates used for the energy savings calculations were determined according to the following methods:

Electric Rates: Baseline utility rates were determined by dividing the total annual electric costs by the total annual electric consumed (kWh) and then reduced by 25% to account for fixed costs associated with the utility providing electric service.

Heating Fuel Rates: All heating fueled consumed was converted to kBTU based on the following conversion rates

Natural Gas: 102.3 kBTU/CCF
#2 Fuel Oil: 138 kBTU/Gallon
Propane: 92 kBTU/Gallon

The baseline utility rate was determined by dividing the total annual heating fuel costs to the total annual heating fuel consumed (kBTU).

©2013 Energy Systems Group, LLC

4.1 **Adjustments to the Guarantee.** The Guaranteed Savings will be adjusted to account for material changes, where material is defined as any change or changes that may increase or decrease the energy consumption of the Facilities by more than 1% annually, including, but not limited to the following

a. Changes in the hours of operation of any buildings constituting any part of the Facilities.
b. Changes in the occupancy of the buildings constituting any part of the Facilities.
c. Changes in the structure of buildings constituting any part of the Facilities, such as architectural features or building components.
d. Modifications or renovations to the buildings constituting any part of the Facilities, which may or may not change the conditioned space.
e. Changes to the ECMs.
f. Changes in utility prices and/or rate structure.
g. Change in utility suppliers
h. Change in the method of utility billing or purchasing with respect to the Facilities.
i. Addition or deletion of energy consuming equipment at the site.
j. Weather variance from base year to current year.
k. CUSTOMER's failure to adhere to operating and maintenance responsibilities as defined by the equipment manufacturer.
l. Adjustments necessary to account for lighting burnouts as documented before retrofit.
m. New outside air ventilation needed to bring any buildings constituting any part of the Facilities up to state government code.
n. Required increases in light levels to bring any buildings constituting any part of the Facilities up to state government code.
o. Any condition, which affects the energy demand or consumption of Facilities, caused by CUSTOMER or its agents.

CUSTOMER will be responsible for providing ESG notice of actual or proposed material changes to the site and its anticipated effect on energy usage and consumption. CUSTOMER must notify ESG no less than thirty (30) days before a planned material change occurs, or within seventy-two (72) hours of an emergency or unplanned material change.

CUSTOMER agrees to:

a. Not make any changes to the initial building control's system program without prior notice to ESG.
b. Not place the building control system in a permanent 'on' status, nor will CUSTOMER manually operate or override any part of the building control system except upon equipment failure or emergency conditions.
c. Provide access for the **ESG** to adjust the ECMs to ensure optimal operation and maximum energy savings.
d. Maintain the space temperature settings for heating between 68°F and 72°F during occupied hours. Maintain space temperature settings for cooling between 72°F and 76°F during occupied hours. A heating setback temperature of 55°F and a cooling setback temperature of 80°F are to be used during non-occupied hours.

©2013 Energy Systems Group, LLC

4.1.1 **Escalation Rates.** The annual Escalation Rates listed below are agreed upon as part of the Guaranteed Energy and Maintenance Savings listed in Table A and for the O&M costs listed in the financial section of the proposal. ESG and CUSTOMER agree to the escalation rates listed in Table C below:

Table C – Escalation Rates

Escalation Rates	
Energy Cost Calculations/Yr	1%
Mainatenance Cost Escalation/yr	1%

The above escalation rates were provided by the CUSTOMER and will be applied in the Energy Services Guarantee Report

The escalation rates include the general rate of inflation. The escalation of Baseline Energy Costs for utility and maintenance rates begins the year following the end of the Baseline Period for this project.

5.0 **BASELINE UNIT ENERGY COSTS** – Are outlined in Section 4.0 – Table B-1 through B-4 and were used for all calculations made for the first Guarantee Year under this Exhibit.

©2013 Energy Systems Group, LLC

5.1 ECM TABLE – The ECM table below lists each ECM and the M&V protocol for each.

Table D – ECM list with M&V Approach Designated

Base Project			
ECM	**Description**	**M&V Option**	**Measured Variable**
1	Lighting Improvements - LED Upgrades	A	Pre and Post Watts Measurement
2	Building Weatherization and Insulation Improvements	Agreed Upon	
3	Water Conservation	Modified Option A	Calculated
Tom Ridge Environmental Center			
ECM	**Description**	**M&V Option**	**Measured Variable**
TREC-1	Correct Excessive Pressure in Tower	Modified Option A	Building Pressure
TREC-2	Replace Failed Fan Powered Boxes	N/A	
TREC-3	Adding individual Private Temperature Controls	N/A	
TREC-4	Relocate Thermostats Located on Outside Walls	N/A	
TREC-7A	Replace Exterior Air Handling Units-AHU 3 Only	Modified Option A	Manufacters Published Energy Efficiency Ratings with Calculated Hours of Operation
TREC-7B	Repair Heat Recovery Wheels on AHU 1 and 2	N/A	
TREC-8	Implement Occupied/Unoccupied Temperature Control	Agreed Upon	Engineer Calculations
TREC-9A	Replace Failed Water Heater	N/A	
TREC-10	Install VFD on Pumps	Option A	Motor KW
Presque Isle State Park			
ECM	**Description**	**M&V Option**	**Measured Variable**
PISP-3	Replace Boiler and Install New Radiant Tube Heating System In Maintenance Building	Modified Option A	Pre and Post Combustion Test and Calculated Hours of Operation
Forbes Forest District			
ECM	**Description**	**M&V Option**	**Measured Variable**
FFD-1	Install New Programmable Thermostats	Agreed Upon	
FFD-2	Replace Boiler	Modified Option A	Pre and Post Combustion Test and Calculated Hours of Operation
FFD-3	Replace Existing Furnace and Install New Unit Heater	Modified Option A	Pre and Post Combustion Test and Calculated Hours of Operation
Cornplanter Forest District			
ECM	**Description**	**M&V Option**	**Measured Variable**
CFD-1	Replace Boiler in Office	Modified Option A	Pre and Post Combustion Test and Calculated Hours of Operation
Point State Park			
ECM	**Description**	**M&V Option**	**Measured Variable**
PSP-1	Replace Up Lighting in the Portal Bridge to LED	A	Pre and Post Watts Measurement
PSP-2	Remove the Four (4) 1000 Watt Metal Halide Lights and Retrofit with LED fixtures and Bath and Pump House	A	Pre and Post Watts Measurement
PSP-3	Remove Eighteen (18) Center Column 1000 Watt Halogen Lamps and Retrofit them with LED Lamps	A	Pre and Post Watts Measurement
Moraine State Park			
ECM	**Description**	**M&V Option**	**Measured Variable**
MSP-1	Install remote Heating Control for 11 Modern Cabins	Agreed Upon	
MSP-2	Replace Oil Furnace at Park Office	Modified Option A	Pre and Post Combustion Test and Calculated Hours of Operation
MSP-3	Replace Doors and Windows at 2 Maintenance Buildings	Agreed Upon	
MSP-4	Install Instantaneous Hot Water Heaters at Modern Cabins	Modified Option A	Calculated
Pymatuning State Park			
ECM	**Description**	**M&V Option**	**Measured Variable**
PYSP-1	Replace Oil Boiler with Propane Boiler at Jamestown Maintenance	Modified Option A	Pre and Post Combustion Test and Calculated Hours of Operation
PYSP-2	Replace Oil Boiler with Propane Boiler at Park Office	Modified Option A	Pre and Post Combustion Test and Calculated Hours of Operation

©2013 Energy Systems Group, LLC

6.0 HOURS OF USE

The hours of operation for the Guarantee are set forth in table E-1 below and were used for all calculations made in this Attachment. These hours were determined from data supplied to ESG by DCNR. These hours were agreed upon between the CUSTOMER and ESG.

©2013 Energy Systems Group, LLC

Table E-1 – Hours of Use for Lighting

Area Description	Annual Hours
AUDITORIUM	2088
CONFERENCE ROOM	2088
CLASSROOM, HIGH SCHOOL	2284
CLASSROOM, MIDDLE SCHOOL	2055
CLASSROOM, ELEM SCHOOL	1827
FITNESS CENTER	2704
GYMNASIUM	3640
GYM LOCKER ROOMS	3863
HALLWAY	3863
JANITOR CLOSET	728
JANITOR CLOSET - EXISITNG OCC SENSOR	418
KITCHEN	1827
CAFETERIA	2268
LOCKER ROOM	3863
MECHANICAL ROOM	3863
MECHANICAL ROOM - EXISTING OCC SENSOR	3090
OFFICE	2248
OFFICE - EXISTING OCC SENS	1872
EXTENDED OFFICE HOURS 12HR DAY	4380
MEDIA CENTER	2088
RESTROOM	3863
RESTROOM - EXISTING OCC SENSOR	1159
PRIVATE RESTROOM	522
PRIVATE RESTROOM - EXISTING OCC SENSOR	418
STORAGE	1000
STORAGE - EXISTING OCC SENSOR	700
VACANT	8760
VENDING MACHINES	8760
24 HOURS 7 DAYS - EXISTING SENSOR	6132
WAREHOUSE - OCC SENS	1827
EXTERIOR	4380
24 HOURS 7 DAYS	8760
EXTENDED OFFICE HOURS 12HR DAY EXISTING SENSOR	3066
FOREST DISTRICT 8 - CLEAR CREEK	3276
FOREST DISTRICT 4 - FORBES OFFICES	2080
FOREST DISTRICT 4 - FORBES	3261
JENNINGS ENVIRONMENTAL EDUCATION CENTER	2210
ENVIRONMENT EDUCATION	2210
MAINTENANCE/STORAGE HOURS	2601
EXTERIOR - 4 MONTHS OF OPERATION	1440
EXTERIOR - 8 MONTHS OF OPERATION	2880
EXTERIOR - 10 MONTHS OF OPERATION	3600
WATER/RECREATION HOURS	2760
BATH/TOILET HOURS	4581
SHELTER HOURS	3704
MILL HOURS	1000
EXTERIOR - 6 MONTHS OF OPERATION	2160
RETAIL HOURS	1440

©2013 Energy Systems Group, LLC

7.0 M&V APPROACH

IPMVP (September 2010) Option A, Modified Option A and Agreed Upon Savings are the approaches used in the M&V process for verifying savings related to this project. Option A & Modified Option A Savings are being used with consideration of the characteristics of the specific ECMs, acceptable accuracy, and reasonable cost.

Option A

The verification techniques for Option A for electrical savings, "Retrofit Isolation: Key Parameter Measurement" savings are determined by partial field measurement of the energy use of the system(s) to which an ECM was applied, separated from the energy use of the rest of the facility. Measurement may be either short term or "continuous". In this approach, some but not all parameters may be stipulated fairly to represent the probable actual value. This approach is the least expensive with acceptable accuracy.

Option A, Retrofit Isolation: Key Parameter Measurement includes procedures for verifying that:

- ☑ Baseline conditions are properly defined
- ☑ Equipment and/or systems contracted to be installed have been installed
- ☑ Installed equipment/systems meet specifications
- ☑ Pre and post measurement of kW for lighting
- ☑ Installed equipment is operating and fully functional
- ☑ Installed equipment continues to operate as planned throughout the term of the contract

Option A will be used in the verification of the Electrical and Fuel Savings for this contract. The verification of savings will be done by utilizing a one-time pre and post measurement, agreed upon hours of operation, manufacturer's data and engineering calculations. The savings will be carried through the Guarantee Years (2 through 20), escalating annually as listed in Table-C "Escalation Rates". The calculations for savings are as follows:

Lighting Upgrades (including Interior, Exterior and Lighting Controls)- ESG will take one-time watt readings on sample fixtures before and after upgrade to insure savings. Hours of operations for the facilities were stipulated based on lighting logger data and are agreed upon. Savings calculations will be reviewed and accepted by both parties and will be validated as required. The methodology, inputs and assumptions presented for the lighting retrofit savings calculations are stipulated for the contract term. The calculations for lighting are as follows:

*Kilowatt hours (kWh) Saved = Total Kilowatts Saved * Hours per Year*

*$ Saved = Kilowatt hours Saved * utility unit cost*

Baseline and post-retrofit wattage values for various lighting fixtures are presented in Appendix "Lighting Line by Line". The methodology, inputs and assumptions presented for the lighting retrofit savings calculations are stipulated for the contract term.

©2013 Energy Systems Group, LLC

Modified Option A

The verification techniques for Modified Option A for savings are determined by partial field measurement of the energy use of the system(s) OR manufacturer certified efficiency ratings to which an ECM was applied, separated from the energy use of the rest of the facility. In this approach, some but not all parameters may be stipulated fairly to represent the probable actual value. This approach is the least expensive with acceptable accuracy.

Modified Option A, includes procedures for verifying that:

- ☑ Baseline conditions are properly defined
- ☑ Equipment and/or systems contracted to be installed have been installed
- ☑ Installed equipment/systems meet specifications
- ☑ Installed equipment is operating and fully functional
- ☑ Installed equipment continues to operate as planned throughout the term of the contract

Modified Option A Savings – Boiler Replacement

Baseline energy consumption based on collected field data and combustion efficiency of existing boilers. Post installation energy consumption based on combustion efficiency of new boilers.

Pre M&V: Energy Systems Group will take a combustion efficiency test to verify the efficiency of existing boilers and estimate the fuel consumption of existing boilers based on collected field data and utility bills.

Post M&V: Energy Systems Group will take a combustion efficiency test to verify the efficiency of new boilers.

Efficiency Upgrade Heating Fuel Savings: Savings for the new boilers will be determined using the base heating load and the difference in efficiencies between the existing burners and new burners.

Efficiency Upgrade Heating Fuel Savings = Existing Baseline Fuel Usage x (Measured Existing burners efficiency- New burners efficiency)

Efficiency Upgrade Savings Dollars = Efficiency Upgrade Heating Fuels Savings x Avoided Base Fuel Cost (escalated according to Table C).

The Efficiency Upgrade Savings Dollars equation captures the dollars saved as DCNR is no longer purchasing this quantity of fuel oil.

©2013 Energy Systems Group, LLC

Modified Option A Savings – AHU Replacement

Baseline energy consumption based on collected field data and equipment efficiency rating of the existing AHU. Post installation energy consumption based on equipment efficiency rating of the existing AHU

Pre M&V: Energy Systems Group will take a Full Load KW reading of the compressors and the temperature difference across the DX coil for the new AHU

Post M&V: Energy Systems Group will take a Full Load KW reading of the compressors and the temperature difference across the DX coil for the new AHU.

Efficiency Upgrade Savings: Savings for the new boilers will be determined using the base heating load and the difference in efficiencies between the AHU and new AHU.

Energy Savings = Pre-retrofit energy use – Post-retrofit energy use

Pre-retrofit energy use = Heating/Cooling energy use of building / efficiency of existing unit

Post-retrofit energy use = Heating/Cooling energy use of building / efficiency of proposed unit

$ Saved = Energy Savings x cost per energy unit escalated annually according to Table C or current Cost per Energy unit, whichever is higher

Modified Option A Savings – VFD

Baseline energy consumption based on collected field data and measured Motor KW. Post installation energy consumption based on measured Motor KW.

Pre M&V: Energy Systems Group will take a Full Load KW reading of the motor prior to VFD installation.

Post M&V: Energy Systems Group will take a Full Load KW reading of the motor after to VFD installation.

Efficiency Upgrade Savings: Savings for the new boilers will be determined using the base heating load and the difference in existing motor KW and new Motor with VFD.

Energy Savings = Pre-retrofit energy use – Post-retrofit energy use

Pre-retrofit energy use = Electric power (kW) x load fraction x time of use (h)

Post-retrofit energy use = Electric power (kW) x load fraction x time of use (h)

$ Saved = Energy Savings x cost per energy unit escalated annually according to Table C or current Cost per Energy unit, whichever is higher

©2013 Energy Systems Group, LLC

Modified Option A Thermal Savings – Lavatory Sink Aerators (Thermal Savings Only)

Higher heat loss from higher water flow can be reduced through lowering the water flow through water fixtures ESG will document the completed scope to verify the areas water fixtures are installed. The governing concept for calculating the energy savings for this measure is outlined below:

Efficiency Upgrade Heating Fuel Savings = heat loss/gain x flow x time of use / system efficiency

Efficiency Upgrade Savings Dollars =Efficiency Upgrade Heating Fuel Savings x Avoided Base Fuel Cost escalated annually according to Table C or current Cost per Energy unit, whichever is higher. The Efficiency Upgrade Savings Dollars equation captures the dollars saved as DCNR is no longer purchasing this quantity of fuel oil.

Agreed Upon Energy Savings:
The verification techniques for Agreed Upon Energy Savings by providing documentation that verifies the sequence of operation and/or efficiency of a system before and after the retrofit, and multiplying the difference by agreed upon or "calculated" factors. The Guarantee Year Period will utilize manufacturer data for existing equipment as well as for new equipment and use calculated baseline utility use to determine savings. Changes in equipment parameters such as equipment efficiency, equipment run time, and changes in insulation, based on existing and post installation conditions will be used to determine the savings. The Pre and Post installation changes will be used in the calculations to determine the first year savings. The savings will then be escalated over the course of the guarantee term in accordance with the Section C of this M&V Plan.

The table below outlines the source of the Agreed Upon Energy Savings as reduction to the accepted electric baseline adjustment. Upon final acceptance of the project all values presented in this Table will also be accepted as the final savings values for year requiring no further verification or reporting. These savings will escalate annually as outlined in Section 4.1.1

Table F – Agreed Upon Energy Savings

Year 1 Agreed Upon Energy Savings		
ECMs	**Description**	**Annual Savings**
TREC-1, TREC-3, TREC-4, TREC-9, FFD-1, MSP-1	Control Upgrades	$ 5,498
2, MSP-3	Building Weatherization	$ 83,340

©2013 Energy Systems Group, LLC

Agreed Upon Energy Savings (Electric) - Control Strategies Implementation – Direct Digital Controls (DDC)

The calculations attached in Appendix "Savings Calculations" include inputs, assumptions and standard calculation methodologies, all of which are part of the energy calculations, and are stipulated for the contract term. The verification techniques for Guarantee Year will be determine savings by providing documentation that verifies the sequence of operation and/or efficiency of a system before and after the retrofit, and multiplying the difference by agreed upon or "calculated" factors. Guarantee Year will utilize manufacturer data for existing equipment as well as for new equipment and use calculated baseline utility use to determine savings. Changes in equipment parameters such as equipment efficiency, equipment run time, and changes in insulation, based on existing and post installation conditions will be used to determine the savings.

The Pre and Post installation changes will be used in the calculations to determine the first year savings. The savings will then be escalated over the course of the guarantee term in accordance with the Table C of this M&V Plan

The energy use (or loss) has multiple factors. For example, in the case of unoccupied period temperature setback, infiltration as well as heat loss (or gain) through the building envelope contributes to the energy use. In order to avoid claiming the energy savings twice, we assumed that the spaces are 'tight', as defined by ASHRAE in terms of infiltration. This is especially a valid assumption, when building envelope enhancements are implemented, resulting in a tighter building envelope.

Non-Measured: Savings are from the reduced fuel consumption of the thermal load as the result of reduced air infiltration.

Pre M&V: Current operating schedule

Post M&V: Verification that schedule in implemented and Active.

Efficiency Upgrade Heating Fuel Savings: Savings are from the reduced fuel consumption of the thermal load.

©2013 Energy Systems Group, LLC

Agreed Upon Energy Savings – Building Weatherization

The calculations attached in Appendix "Savings Calculations" include inputs, assumptions and standard calculation methodologies, all of which are part of the energy calculations, and are stipulated for the contract term. The verification techniques for Guarantee Year will be determine savings by providing documentation that verifies the sequence of operation and/or efficiency of a system before and after the retrofit, and multiplying the difference by agreed upon or "calculated" factors. Guarantee Year will utilize manufacturer data for existing equipment as well as for new equipment and use calculated baseline utility use to determine savings. Changes in equipment parameters such as equipment efficiency, equipment run time, and changes in insulation, based on existing and post installation conditions will be used to determine the savings.

The Pre and Post installation changes will be used in the calculations to determine the first year savings. The savings will then be escalated over the course of the guarantee term in accordance with the Table C of this M&V Plan

Non-Measured: Savings are from the reduced fuel consumption of the thermal load as the result of reduced air infiltration.

Pre M&V: Inspection and measurement of existing conditions

Post M&V: Verification that weatherization measures have been implemented.

Efficiency Upgrade Heating Fuel Savings: Savings are from the reduced fuel consumption of the thermal load.

©2013 Energy Systems Group, LLC

BASELINE PERIOD ADJUSTMENTS

Proper analysis and comparison can only be achieved if the environmental and facility parameters are equal to those of the base year. Examples of factors that affect the environment and facility parameters are weather, energy rates, facility schedules, and changes in equipment. The baseline may need to be adjusted to equalize the parameters of the current year so that an accurate analysis can be performed and valid savings can be measured. In essence, the adjustment process shows what the costs and usage would have been in the base year, under the current conditions, for an 'apples to apples' comparison. These adjustments typically cover:

- ☑ Standardize for the Number of Days in a Billing Period
- ☑ Normalize the Differences in Outdoor Temperature Through Degree Days
- ☑ Changes in Facility Occupancy and Use
- ☑ Additions or Deletions of Energy Using Equipment
- ☑ Additions or Deletions of Square Footage
- ☑ Changes in Energy Prices and / or Rate Structures

Savings calculations may also be adjusted for new outside air ventilation requirements; changes in operational modes (i.e. – addition of air conditioning); and changes to comfort levels. The CUSTOMER will notify ESG within fifteen (15) business days of any significant changes in facility operations, occupancy levels, hours of operation, structure, equipment or any other changes that are reasonably expected to affect energy use by more than 1%. The impact of such changes on the guarantee energy savings amount will be monitored through the energy monitoring systems and savings calculated through engineering analysis by ESG.

The consumption energy unit cost for each specific energy type is the total consumption related cost found on the respective utility bill, including charges for consumption, service, power factor, fuel adjustment, etc., divided by total consumption OR the stipulated energy cost given in Section 4. Late payment charges will not be included in this calculation.

Seasonal Characteristics

- Heating Season begins October 1st and ends May 1st.

Heating Occupied Hours – 70 Deg F, M-F (5 AM to 10AM)
Heating Un-Occupied Hours – 65 Deg F, M-F (10PM to 5AM)

©2013 Energy Systems Group, LLC

8.0 GLOBAL ASSUMPTIONS

8.1 Energy Prices.

Either the Baseline Period utility unit cost escalating as outlined in Section 4.1 or the current period utility unit cost, whichever is greater, will be used in determining the adjusted base period utility unit cost. In no case, however, shall the unit cost used to calculate the Guaranteed Energy Savings be lower than the escalated Baseline Period utility unit costs rate.

8.2 Guarantee Year Utility Rate Adjustment Factors, if applicable.

Generally, ESG is not responsible for any utility rate changes other than those defined in the post-installation energy policy. A rate adjustment factor will be applied to calculate actual savings regarding the changes of the utility rates. The actual energy cost savings will be the product of the calculated energy savings from defined rates and the utility adjustment factor when applicable. In no case, however, shall the rate used to calculate the Guaranteed Energy Savings be lower than base year utility rate.

8.3. Schedule of Verification Reporting Activities.

Table G – Reporting Activities		
Item	**Time for Submission**	**Owner's Review & Acceptance Period**
Annual Report	90 days after annual Guarantee Year period for years 1-3; subsequent years to be negotiated as needed	* 30 days

* Owner's Acceptance becomes automatic if not provided by the end of the Owner's Review & Acceptance Period.

8.3.1 Content and Format of Reports.

ESG is responsible for the periodic Energy Services Guarantee Report as outlined in Section 3.2.

©2013 Energy Systems Group, LLC

9.0 MAINTENANCE SAVINGS

The maintenance cost savings for this project are negotiated and agreed upon by ESG and accepted by the CUSTOMER. There is no need to verify the agreed upon maintenance savings. The table below outlines the source of the Maintenance savings as reduction to the accepted baseline adjustment. Upon final acceptance of the project all values presented in this table will also be accepted as the final savings values for year requiring no further verification or reporting. These savings will escalate annually as outlined in Section 4.1.1

Table H – Maintenance Savings		
ECM	**Description**	**Annual Savings**
Base Project-	Lighting Upgrades	$28,650
TREC-2	Replace VAV Boxes	$1,680
TREC-7A	Replace AHU 3	$688

10.0 DOCUMENTATION FOR SECTION 179D TAX DEDUCTION

As a result of ESG's implementation of the Work associated with this Project, certain annual federal income tax deductions under Section 179D of the Internal Revenue Code may be available to ESG as the party primarily responsible for designing the energy efficient improvements to the Owner's Facilities.

The Owner agrees to cooperate with ESG by executing annually, if necessary, a written allocation and declaration required by Section 179D related to the Measures, or property, placed in service under the parties' Agreement during each applicable calendar year.

ESG will prepare, and is responsible for the accuracy of, the declaration and all accompanying documentation for the Owner's signature. ESG alone will be designated the party primarily responsible for designing the energy efficient commercial building property and thus the party to whom the Section 179D deduction is allocated.

©2013 Energy Systems Group, LLC

11.0 ASSIGNMENT OF ENVIRONMENTAL ATTRIBUTES

As a result of the implementation of this Project, certain Environmental Attributes may be available, either now or in the future. This section specifies the process whereby the Owner will assign such Environmental Attributes to ESG.

"Environmental Attributes" means any and all credits, deductions, benefits, emission reductions, incentives, offsets, and allowances, howsoever entitled, attributable to and arising from the implementation of this Project, whether such Environmental Attributes now exist or are developed in the future. Environmental Attributes include but are not limited to: (1) Any avoided emissions of pollutants to the air, soil, or water; (2) Any avoided emissions of carbon dioxide (CO_2), methane (CH_4) and other greenhouse gases (GHGs); (3) Section 45 credits; (4) green tags; (5) renewable energy credits; and (6) The reporting rights to these avoided emissions such as White Tag Reporting Rights. Environmental Attributes also include any energy, capacity, reliability, or other energy reduction attributes that result from the implementation of this Project.

All Environmental Attributes arising from the implementation of this Project shall be owned by ESG. Owner agrees to execute all required documentation to assign all Environmental Attributes to ESG. If any filings are required with the Internal Revenue Service or some other governmental entity to obtain the benefits of the Environmental Attributes, Owner hereby instructs ESG to prepare and file such documents.

©2013 Energy Systems Group, LLC

12.0 PROJECT INFORMATION:

CUSTOMER NAME: **Department of General Services**

Customer Contact: *Rebecca Tomlinson*
Address of Customer: *401 North Street, Room 403 North Office Building, Harrisburg, PA 17125*
Phone: *(717) 705-5946*
Fax: *(717) 705-2887*
E-mail: *Retomlinso@pa.gov*

ESCO Name: ***Energy Systems Group (ESG)***

ESG Contact M&V: Donna Wicks
Street Address: 9877 Eastgate Court | Newburgh, IN 47630
Phone: (812) 492-3714
Fax: (812) 475-2544
E-mail: Dwicks@EnergySystemsGroup.com

Customer Contact for M&V:

Customer Contact: *Rebecca Tomlinson*
Address of Customer: *401 North Street, Room 403 North Office Building, Harrisburg, PA 17125*
Phone: *(717) 705-5946*
Fax: *(717) 705-2887*
E-mail: *Retomlinso@pa.gov*

13.0 DISPUTE RESOLUTION

The M&V plan has been reviewed and accepted by **CUSTOMER**. It is the primary document for the M&V process. If a dispute arises under this M&V agreement, the parties shall promptly attempt in good faith to resolve the dispute by negotiation. If not settled by negotiation, this M&V plan will be referred to as the means to solve related disputes.

©2013 Energy Systems Group, LLC

14.0 POST-INSTALLATION DATA COLLECTED

Owner will provide access to site locations at reasonable times to perform on-site tests to verify performance, changes in use, and to verify modification of facilities as necessary. ***ESG*** will not unreasonably interfere with **CUSTOMER's** operation on the site.

ESG will collect one-time before and after construction measurements for applicable Option A and/or Modified Option A ECMs as described in Section 7.0 of this M&V Plan. As an example in the case of lighting, pre and post sample measurements will be taken on fixture wattage and/or voltage, amperes and power factor. The sampling will follow the protocol outlined in IPMVP or other industry standards. The sampling data will be compared to the nominal wattage values used in the energy calculations. If the average measured wattage value for a fixture type is within ±5%, the nominal wattage value, the nominal wattage value will be used in the M&V calculations. If the measured values are beyond the ±5% limit, then the measured wattage value will be used in the M&V calculations. The wattage data will be used in conjunction with the agreed upon hours of operation and applicable unit utility rates.

All devices employed to meter electric power use shall be capable of metering continuous RMS power at accuracy of +/-5.0% actual value, over the entire load range; Metering of poly-phase loads shall include independent measurement of each phase. ESG proposes to use Fluke 345 PQ, or equal, for the measurements discussed above.

15.0 COST OF M&V ACTIVITIES

For **CUSTOMER's** project, the M&V plan is intended to continue for the first three years of the project term. Year 3 M&V activities will fulfill the contract obligation for proving savings provided the energy savings are realized in full. **CUSTOMER**, at their discretion may choose to discontinue the M&V plan. Proper notification procedures must be followed if such action is considered. During the term of the Agreement, Owner may cancel the annual Energy Services Guarantee Report by providing written notice to ESG at least 30 days prior to the beginning of the next Guarantee Year. If Owner makes such request to cancel the annual Report, the parties agree that ESG will no longer be obligated to perform the remaining Energy Services Guarantee Reports, and the Energy Savings guaranteed by ESG during any remainder of the Term of the Agreement shall be considered fully satisfied and the Guarantee and any associated Support Services Agreement shall terminate.

Customer acknowledges and agrees that if, for any reason, it (i) cancels or terminates receipt of M&V Services, (ii) fails to pay for M&V Services**,** (iii) fails to fulfill any of its responsibilities necessary to enable ESG to complete the Work and provide the M&V Services, or (iv) otherwise cancels, terminates or materially breaches this Agreement, the Guarantee shall automatically terminate and ESG shall have no liability hereunder.

The amount to be paid annually by **CUSTOMER** for the M&V services provided by ***ESG*** as listed in table below. Billed annually at the beginning of the guarantee year.

©2013 Energy Systems Group, LLC

Table I - M&V Annual Costs	
Guarantee Year	**ESG M&V Costs**
1	$8,441
2	$8,694
3	$8,955
Total	**$26,089**

Department Name

By: _____

Its: _____

ENERGY SYSTEMS GROUP, LLC

By: _____
Gregory F. Collins

Its: President

©2013 Energy Systems Group, LLC

PERFORMANCE ASSURANCE

Commissioning

Upon completion of construction, ESG will ensure proper operation of the installed systems through a systematic start-up and testing. The final piece of the installation phase is the system commissioning phase. The equipment and systems in the scope of the project will be tested through the entire length of their operating ranges to confirm their functionality.

ESG believes that a well-executed commissioning program is essential to ensure that systems operate at their optimum level not only when they are first started up, but over the life of the system. ESG has established a commissioning program for all ECMs to ensure that equipment and systems are operating as designed before ECM acceptance.

ESG develops its commissioning process in order to achieve a number of goals:

- To protect our investments in the improvements to the DCNR facilities. The future earnings depend on each ECM meeting the guaranteed savings targets; therefore, the completed installation must perform efficiently over the long term.
- To supplement the training of client staff and to complete the documentation (as-built) process, e.g., design/build or build/own/operate projects.
- To meet conditions imposed by financing sources, government agencies, and our parent company regarding quality assurance standards.

Commissioning Team

Effective commissioning requires a team effort. ESG assembles each commissioning team based on the needs of the specific project. ESG's commissioning team includes ESG's Project Manager, Construction Manager, design engineers, contractors, equipment manufacturers and another appropriate client (site) representatives.

ESG's Project Manager (PM) facilitates the commissioning process by reviewing and approving commissioning plans, managing commissioning schedules and client communication, assigning commissioning resources, resolving problems, and approving final equipment performance test reports, as-built documentation, and O&M manuals.

ESG's PM is the presiding onsite commissioning/start-up "authority." The PM is responsible for communicating with DCNR, DGS and onsite maintenance personnel regarding all commissioning and start-up activities. ESG's PM or a person assigned to him/her will sign off on applicable testing documents, final equipment performance, as-built documentation, and O&M manuals. ESG's Construction Manager provides logistical support to the PM by coordinating onsite start-up activities.

©2013 Energy Systems Group, LLC

The other members of the team contribute as follows:

- ESG's Design Team is responsible for the design verification of each system and component after installation. The Design Team also provides support as needed to resolve design issues and answer design-related questions.

- Contractors include the general contractor, mechanical contractor, electrical contractor, instrumentation, water/waste water and controls contractors, etc. Contractors are responsible for scheduling and implementing pre-functional testing of all systems and equipment installed by them. Contractors also provide ESG with start-up, commissioning activities and support as needed.

- Manufacturers provide equipment installation and start-up documentation. For large or complex equipment, manufacturer representatives are responsible for installation inspection, start-up, commissioning, and performance verification for their equipment.

The DCNR, state project management, or engineer help to facilitate the commissioning process, acts as a liaison with onsite operating personnel, approves the commissioning plans, witnesses commissioning activities, and signs off on functional and equipment performance tests.

While ESG will utilize internal resources for the commissioning of the DCNR project, as noted above, our subcontractors play a critical role in installing the equipment and, as such, they will also be involved in its commissioning. However, ESG will retain complete control and responsibility for the commissioning of each proposed ECM. ESG anticipates that both DCNR and its Central Office will also be an integral part of the commissioning process, both as an observer and a participant.

©2013 Energy Systems Group, LLC

ESG ENERGY SYSTEMS GROUP









©2011 Energy Systems Group, LLC

www.energysystemsgroup.com

PREVENTATIVE MAINTENANCE

ESG will provide training on newly installed assets to ensure that existing staff can provide the preventative maintenance, to ensure the assets operate effectively and efficiently. Please refer to the Training Section below for further details on types of training.

Based on discussions with DCNR and DGS staff, ESG has not included any preventative maintenance services to be provided by ESG. The maintenance services will be provided for the new assets by DCNR maintenance staff and/or a third party contractor at DCNR's choosing and direction.

Once the equipment is installed and operational, DCNR will be responsible for the operations, preventive maintenance and upkeep of the equipment and/or systems.

Timely and proper preventative maintenance, in line with equipment manufacturer's recommendations, is vital to the sustained performance and life of the installed assets as well as to maintaining the energy savings. DCNR Maintenance Staff will be instructed on proper documentation of maintenance performed on the assets installed under the energy performance contract to insure that the equipment is operating at higher efficiency levels.

©2013 Energy Systems Group, LLC

TRAINING

ESG has a successful record of providing valuable technical training in support of GESA projects. ESG utilizes highly-skilled internal and third party training staff depending on training requirements. Some areas of the training is standardized, though much of the supplied instruction is customized and tailored to be directly associated to the energy conservation measures (ECMs) implemented during construction. ESG works closely with all key facility personnel to deliver educational training and seminars on the proper operation of equipment specific to the GESA Project Energy Conservation Measures (ECMs) as new assets are installed.

This customized and continual training program ensures correct operation and maintenance of equipment, optimal efficiency, and maximum extension of equipment life throughout the term of the agreement. What has worked well for ESG with previous clients is to combine on-site system specific training with equipment sponsored classroom training. We have always found the training that occurs on-site on the specific equipment installed, is more meaningful than classroom work. The result of this training will be maintenance staff members capable of continually improving and sustaining operating efficiency.

ESG's comprehensive training program includes five (5) major components:

- Customized maintenance staff training and cross training
- Energy cost reduction training
- Manufacturer training
- On-site training
- Association of Energy Engineers training center classes

Customized Maintenance Staff Training and Cross Training:

Personal interviews of maintenance staff are conducted by ESG as an integral part of the maintenance staff training program to determine skill levels based on professional experience, education, and prior training. Utilizing the information gathered in these interviews, and with input provided from the DCNR staff, the ESG Training Specialist selects appropriate classroom educational modules and develops custom training tailored to the needs and skill levels of the staff. A typical program could contain three classroom days of instruction and two days of hands-on training on actual ECM equipment and/or systems for each staff member. The interviews are conducted before the project installation begins and provides an opportunity to educate the maintenance staff about the project, as well as obtain their support and assistance from the beginning of the project. ESG will work with DCNR personnel to evaluate individual capabilities and propose tailored training programs that meet the needs of the facilities. Many of these training classes are video and audio recorded, thus allowing the DCNR staff and maintenance personnel to maintain a library for either refresher courses or new employee orientation.

Program Objective

The main objective of any training program is to improve existing operational efficiency of building energy systems and enhance facility environmental comfort by training and cross training the maintenance staff in the basics of HVAC as well as electrical theory and operation.

©2013 Energy Systems Group, LLC

Program Topics

- Domestic Water Heaters
- Energy Recovery AHU
- Boiler and Boiler Controls

Energy Cost Reduction Training

ESG has significant in-house resources and advanced technical capabilities to provide the DCNR staff with a better understanding of energy conservation technologies and their usage. The complete understanding of overall facility operations and energy consumption that ESG incorporates into its energy cost reduction training will be of great benefit to DCNR. The use of in-house ESG personnel for this component of the training, and their extensive experience in identifying and implementing energy conservation methods, will ensure that DCNR realizes proposed project energy and operational savings.

ESG regularly conducts a wide range of seminars to assist customers in effectively reducing energy costs. These seminars are adapted to each project and include training manuals, educational CDs, and instructional videotapes that reinforce the training.

Energy Cost Reduction Training will be performed on-site to eliminate staff downtime, and will include the information itemized above, as well as information and instruction covering system architecture, operational requirements, and control strategies that can be employed to ensure energy savings.

Manufacturer Training

ESG is vendor and product neutral, with no vested interest in any particular vendor or manufacturer. This impartiality allows us to incorporate the training from the appropriate manufacturer or service provider as the situation warrants. Most manufacturer's offer excellent training, but the training is often focused solely on their product lines. ESG incorporates an annual training allowance, paid for from guaranteed savings, which allows DCNR staff to take advantage of the expertise of multiple manufactures that can provide both an application and theory overview for the DCNR personnel.

ESG will coordinate and organize vendor training on proper equipment operation for DCNR personnel, and will work with the manufacturer of each major piece of equipment to develop training manuals and a core curriculum that includes disassembly/reassembly instructions, troubleshooting tips, and parts lists.

This training will include operation, maintenance, and troubleshooting for all major equipment items.

©2013 Energy Systems Group, LLC

On-Site Training

ESG provides on-site training for all equipment installed under the GESA project. Our research indicates that the most effective training takes place when performed on the actual equipment. Additionally, on-site training allows for smaller class size, customized curriculum, and less downtime for maintenance personnel.

Training is performed throughout the term of the contract in order to update skills, provide the latest information, and train new personnel. Training programs are taped as a reference tool for personnel and new staff.

ESG will prepare tutorials and other training materials (including videos, CD's, and text) that will assist the DCNR in training new staff, as well as providing a library of training materials for existing personnel.

Part of the on-site training involves monitoring strategies to ensure that DCNR personnel are knowledgeable of how to properly monitor the performance of all equipment installed as part of the project, as well as other related systems involved in the savings to be produced.

ESG's integrated training programs address the purpose and operation of each piece of equipment, how that equipment interacts with other ECMs, and its effects on the performance of other building systems. This training component also provides critical and relevant information on system interactions and integrated performance in an effort to optimize savings.

ESG recognizes that proper training of personnel can influence operating and energy savings for the DCNR facilities, and has significant resources in place to meet this objective.

©2013 Energy Systems Group, LLC

INNOVATIVE ENERGY SOLUTIONS

ESG ENERGY SYSTEMS GROUP

BENEFITS:

REDUCE OPERATING COSTS

REBUILD AGING INFRASTRUCTURE

MODERNIZE OLD BUILDINGS

IMPROVE COMFORT AND PRODUCTIVITY

BECOME ENERGY EFFICIENT

LOWER GREENHOUSE GAS EMISSIONS

REDUCE CARBON FOOTPRINTS

BECOME GREEN

WWW.ENERGYSYSTEMSGROUP.COM



GOVERNMENT



HIGHER EDUCATION



K-12 EDUCATION



COMMERCIAL



HEALTHCARE



RENEWABLE ENERGY

©2011 Energy Systems Group, LLC

APPENDIX

REGION 2 BUILDING SCOPE

Region 2 State Park Building Total Square Footage

State Park	# of Buildings	Total Building Area
Clear Creek State Park	53	28,373
Cook Forest State Park	60	45,756
Erie Bluffs State Park	1	0
Jennings Environmental Education Center	9	10,160
Keystone State Park	37	36,656
Kooser State Park	36	18,440
Laurel Hill State Park	297	207,683
Laurel Mountain State Park	14	
Laurel Ridge State Park	69	27,840
Laurel Summit State Park	3	1,040
Linn Run State Park	26	18,993
Maurice K. Goddard State Park	22	25,496
McConnells Mill State Park	7	6,631
Moraine State Park	129	132,891
Ohiopyle State Park	219	40,263
Oil Creek State Park	43	20,871
Point State Park	7	9,300
Presque Isle State Park	44	131,594
Pymatuning State Park	158	135,377
Raccoon Creek State Park	188	147,334
Ryerson Station State Park	24	25,516
Yellow Creek State Park	76	57,295
Total	**1522**	**1,127,509**

©2013 Energy Systems Group, LLC

Region 2 Forest District Building Total Square Footage

Forest District	# of Buildings	Total Building Area
Clear Creek	8	18,263
Cornplanter	15	16,818
Forbes	26	41,800
Gallitzin	14	16,287
Total	**63**	**93,168**

©2013 Energy Systems Group, LLC

BASELINE ENERGY CONSUMPTION BY PARK

ELECTRIC ENERGY USAGE

Electric Consumption and Cost				
Location	Building Area	kWh Consumption	Cost	Burdened Electric Rate ($/kWh)
Clear Creek State Park	25,203	204,994	$23,437.14	$0.1143
Cook Forest State Park	8,400	496,566	$57,497.40	$0.1158
Jennings Environmental Education Center	7,280	72,589	$6,173.29	$0.0850
Keystone State Park	35,609	387,638	$34,851.85	$0.0899
Kooser State Park	16,466	28,976	$28,976.32	$1.0000
Laurel Hill State Park	187,848	553,705	$52,211.92	$0.0943
Laurel Mountain State Park				
Laurel Ridge State Park	17,169			
Laurel Summit State Park	800			
Linn Run State Park	18,913	184,708	$17,019.03	$0.0921
Maurice K Goddard State Park	19,193	132,234	$14,739.67	$0.1115
McConnells Mill State Park	2,990	14,810	$2,073.16	$0.1400
Moraine State Park	96,136	1,032,823	$114,460.44	$0.1108
Ohiopyle State Park	39,113	1,598,482	$66,950.68	$0.0419
Oil Creek State Park	15,399	43,824	$5,406.72	$0.1234
Point State Park	7,200	135,981	$144,198.27	$1.0604
Presque Isle State Park	95,417	1,414,480	$154,648.01	$0.1093
Pymatuning State Park	19,785	693,001	$124,013.84	$0.1790
Raccoon Creek State Park	126,107	582,817	$74,970.86	$0.1286
Ryerson Station State Park	20,419	153,263	$14,121.52	$0.0921
Yellow Creek State Park	49,799	186,697	$25,844.61	$0.1384
Forbes Forest District (FD4)	41,800	29,710	$13,771.46	$0.4635
Gallitzin Forest District (FD6)	16,467	20,911	$5,240.95	$0.2506
Clear Creek Forest District (FD8)	18,263	68,208	$6,789.62	$0.0995
Cornplanter Forest District (FD14)	16,818	2,927	$2,839.50	$0.9701

Notes:
- Laurel Mountain State Park and Laurel Summit State Park are billed to Linn Run State Park
- Laurel Ridge State Park is billed to Laural Hill State Park
- Baseline data is from July 2014 to June 2015

©2013 Energy Systems Group, LLC

HEATING FUEL USAGE

Heating Fuel Consumption and Cost							
Parks	Building Area	Natural Gas (CCF)	Fuel Oil (Gal)	Propane (gal)	Heating Fuel Consumption (kBTU)	Heating Fuel Cost ($)	Burdened Fuel Rate ($/KBTU)
Clear Creek State Park	25,203		2,808	10,999	1,399,412	$24,332.01	$0.0174
Cook Forest State Park	8,400	10,999			1,125,198	$11,291.61	$0.0100
Jennings Environmental Education Center	7,280		950	413	169,096	$5,162.05	$0.0305
Keystone State Park	35,609		1,205	980	256,450	$3,355.50	$0.0131
Kooser State Park	16,466						
Laurel Hill State Park	187,848		3,283	579	506,322	$19,934.43	$0.0394
Laurel Mountain State Park							
Laurel Ridge State Park	17,169						
Laurel Summit State Park	800						
Linn Run State Park	18,913		1,473	356	236,021	$5,152.92	$0.0218
Maurice K Goddard State Park	19,193			2,340	215,289	$2,547.80	$0.0118
McConnells Mill State Park	2,990		550		75,900		$0.0000
Moraine State Park	96,136		2,600		358,800	$12,126.44	$0.0338
Ohiopyle State Park	39,113		2,150		296,700	$11,281.98	$0.0380
Oil Creek State Park	15,399	3,083		3,278	616,967		$0.0000
Point State Park	7,200	28			2,864	$2,759.74	$0.9635
Presque Isle State Park	95,417	32,901		14,249	4,676,644	$50,340.85	$0.0108
Pymatuning State Park	19,785		6,384	2,873	1,145,308	$16,105.69	$0.0141
Raccoon Creek State Park	126,107		417	6,539	659,071	$11,411.32	$0.0173
Ryerson Station State Park	20,419			6,428	591,358		$0.0000
Yellow Creek State Park	49,799		678	970	182,804	$0.00	$0.0000
Forbes Forest District (FD4)	41,800	3,360	1,214		511,260	$18,365.69	$0.0359
Gallitzin Forest District (FD6)	16,467	4,859	1,867		754,722	$8,408.41	$0.0111
Clear Creek Forest District (FD8)	18,263	3,296			337,181	$1,037.00	$0.0031
Cornplanter Forest District (FD14)	16,818	477			48,797	$615.39	$0.0126

Notes:
- Laurel Mountain State Park and Laurel Summit State Park are billed to Linn Run State Park
- Laurel Ridge State Park and Kooser State Park is billed to Laural Hill State Park
- Baseline data is from July 2014 to June 2015
- Conversion rates based on 102.3 kBTU/CCF for Natural Gas; 138 kBTU/Gallon of #2 Fuel Oil; 92 kBTU/Gallon of Propane

ESG ENERGY SYSTEMS GROUP
©2013 Energy Systems Group, LLC

LIGHTING SURVEY

LINE BY LINE SURVEY

©2013 Energy Systems Group, LLC

PA State Parks

DETAILED SCOPE OF WORK FOR LIGHTING

EXISTING FIXTURE DESCRIPTION	PROPOSED RETROFIT DESCRIPTION	QUANTITY
0	Retrofit with (2) 18 Watt LED T8 U-Lamps; Direct Wire to Socket	1
10 Watt Metal Halide Post Top Fixture; Silver	New 26 Watt LED Spider Mount Post Top Fixture; Silver	4
100 Watt 2-Lamp Quartz Flood Fixture	(2) New 18 Watt LED Flood Fixtures	2
100 Watt High Pressure Sodium 12" Downlight Fixture	Retrofit with 23 Watt LED 12" Downlight	2
100 Watt High Pressure Sodium Canopy Fixture	Re-Lamp with (1) 27 Watt LED Omni-Cob Lamp; Hardwire Ballast	7
100 Watt High Pressure Sodium Cylinder Fixture	New 40 Watt LED Cylinder Fixture	24
100 Watt High Pressure Sodium Dusk to Dawn Fixture	New 26 Watt LED Dusk to Dawn Barnyard Fixture	4
100 Watt High Pressure Sodium Fixture	Re-Lamp with (1) 27 Watt LED Omni-Cob Lamp; Hardwire Ballast	1
100 Watt High Pressure Sodium Flood Fixture	New 26 Watt LED Flood Fixture	2
100 Watt High Pressure Sodium Shoebox Fixture	New 50 Watt LED Shoebox Fixture	2
100 Watt High Pressure Sodium Wall Pack Fixture	New 24 Watt LED Wall Pack Fixture; Non-Dark Sky	56
100 Watt Incandescent 12" Downlight Fixture	Re-Lamp with (1) 17 Watt LED BR40	4
100 Watt Incandescent 2-Lamp A-Lamp	Re-Lamp with (2) 18 Watt LED A21	19
100 Watt Incandescent 2-Lamp A-Lamp; PAR Holder	Re-Lamp with (2) 17 Watt LED PAR38	1
100 Watt Incandescent 2-Lamp PAR38	Re-Lamp with (2) 17 Watt LED PAR38	1
100 Watt Incandescent 3-Lamp Fixture	Re-Lamp with (3) 18 Watt LED A21	10
100 Watt Incandescent 4-Lamp Fixture	Re-Lamp with (4) 18 Watt LED A21	5
100 Watt Incandescent 6-Lamp A-Lamp Fixture	Relamp with (6) 18 Watt LED A21	2
100 Watt Incandescent A-Lamp & 13 Watt Compact Fluorescent	Re-Lamp with (2) 10 Watt LED A19	7
100 Watt Incandescent A-Lamp Downlight Fixture	Re-Lamp with (1) 17 Watt LED BR40	24
100 Watt Incandescent A-Lamp Fixture	Re-Lamp with (1) 18 Watt LED A21	334
100 Watt Incandescent A-Lamp Jelly Jar Fixture	Re-Lamp with (1) 18 Watt LED A21	31
100 Watt Incandescent A-Lamp; PAR Holder	Re-Lamp with (1) 17 Watt LED PAR38	1
100 Watt Incandescent Cylinder Fixture	Re-Lamp with (1) 17 Watt LED BR40	3
100 Watt Incandescent Drun Fixture; Damaged	New 12" Round 14 Watt LED Drum Fixture	1
100 Watt Incandescent Explosion Proof Fixture	Relamp with (1) 18 Watt LED A21; Difficult Access	3
100 Watt Incandescent G40 Fixture	Relamp with (1) 14 Watt LED G40	12
100 Watt Incandescent PAR38 Fixture	Re-Lamp with (1) 17 Watt LED PAR38	2
100 Watt Incandescent RLM; Difficult Access	Relamp with (1) 18 Watt LED A21; Difficult Access	1
100 Watt Incandescent Wall Pack Fixture	New 24 Watt LED Wall Pack Fixture; Non-Dark Sky	2
100 Watt Jelly Jar Fixture; Damaged	New 18 Watt LED A21 Jelly Jar Fixture	8
100 Watt Mercury Vapor Dusk to Dawn Fixture	New 26 Watt LED Dusk to Dawn Barnyard Fixture	2
100 Watt Mercury Vapor Wall Pack Fixture	New 24 Watt LED Wall Pack Fixture; Non-Dark Sky	3
100 Watt Metal Halide 10" Downlight Fixture	Retrofit with 23 Watt LED 10" Downlight	14
100 Watt Metal Halide 12" Downlight Fixture	Retrofit with 23 Watt LED 12" Downlight	4
100 Watt Metal Halide Canopy Fixture	Re-Lamp with (1) 27 Watt LED Omni-Cob Lamp; Hardwire Ballast	2
100 Watt Metal Halide Cylinder Fixture	New 40 Watt LED Cylinder Fixture	4
100 Watt Metal Halide Dusk to Dawn Fixture	New 26 Watt LED Dusk to Dawn Barnyard Fixture	3
100 Watt Metal Halide Fixture	Re-Lamp with (1) 27 Watt LED Omni-Cob Lamp; Hardwire Ballast	2
100 Watt Metal Halide Flood Fixture	New 26 Watt LED Flood Fixture	3
100 Watt Metal Halide Flood Fixture; Trunion	New 26 Watt LED Flood Fixture; Trunion	3
	New 300 Watt LED Flood Fixture; Trunion	1
100 Watt Metal Halide Jelly Jar Fixture	New 26 Watt LED Jelly Jar Fixture	13
100 Watt Metal Halide Recessed Fixture	Re-Lamp with (1) 27 Watt LED Omni-Cob Lamp; Hardwire Ballast	14
100 Watt Metal Halide Wall Pack Fixture	New 24 Watt LED Wall Pack Fixture; Non-Dark Sky	34
100 Watt Metal Halide Wall Pack Fixture; Decorative	Re-Lamp with (1) 27 Watt LED Omni-Cob Lamp; Hardwire Ballast	29
100 Watt Metal Halide Wall Pack Fixture; Difficult Access	New 24 Watt LED Wall Pack Fixture; Non-Dark Sky	1
100 Watt Quartz Flood Fixture	New 26 Watt LED Flood Fixture	1
1000 Watt Metal Halide 2-Head Sports Light Flood Fixture	(2) New 350 Watt LED Sports Flood Fixtures	1
1000 Watt Metal Halide 4-Head Sports Light Flood Fixture	(4) New 350 Watt LED Sports Flood Fixtures	3
1000 Watt Metal Halide Flood Fixture	New 300 Watt LED Flood Fixture	4
120 Watt Incandescent R40 Fixture	Re-Lamp with (1) 17 Watt LED BR40	12
13 Watt Compact Fluorescent 2-Lamp Canopy	Re-Lamp with (2) 10 Watt LED A19	5
	New 10 Watt LED Canopy Fixture	1
13 Watt Compact Fluorescent 2-Lamp Fixture	Re-Lamp with (2) 10 Watt LED A19	157
13 Watt Compact Fluorescent 2-Lamp R30 Fixture	Relamp with (2) 10 Watt LED BR30	1
13 Watt Compact Fluorescent 3-Lamp Fixture	Re-Lamp with (3) 10 Watt LED A19	43
	Relamp with (3) 10 Watt LED A19	1
13 Watt Compact Fluorescent 4-Lamp Fixture	Re-Lamp with (4) 10 Watt LED A19	23
13 Watt Compact Fluorescent Canopy Fixture	New 10 Watt LED Canopy Fixture	5
13 Watt Compact Fluorescent Downlight	Re-Lamp with (1) 10 Watt LED BR30	49
	Retrofit with 9 Watt LED 6" Downlight	18
13 Watt Compact Fluorescent Downlight; Difficult Access	Relamp with (1) 10 Watt LED BR30; Difficult Access	8
13 Watt Compact Fluorescent Fixture	Re-Lamp with (1) 10 Watt LED A19	478
13 Watt Compact Fluorescent Goose Neck Fixture	Re-Lamp with (1) 10 Watt LED A19	2
13 Watt Compact Fluorescent Jelly Jar Fixture; Damaged	New 10 Watt LED A19 Jelly Jar	6
13 Watt Compact Fluorescent R20 Fixture	Re-Lamp with (1) 8 Watt LED BR20	19
13 Watt Compact Fluorescent; PAR Holder	Re-Lamp with (1) 10 Watt LED PAR30	4
13 Watt Compact Fluroescent 2-Lamp Fixture	New 1x2 2-Lamp Vanity Fixture with (2) 10 Watt LED 2' Lamps; Direct Wire to Socket	2
13 Watt Compact Fluroescent 5-Lamp Fixture	Re-Lamp with (5) 10 Watt LED A19	10
13 Watt Compact Fluroescent 6-Lamp Fixture	Relamp with (6) 10 Watt LED A19	1
13 Watt Compact Fluroescent Globe Fixture	Re-Lamp with (1) 8 Watt LED G25 Globe	4
13 Watt Plug-In CFL 2-Lamp Downlight Fixture	Retrofit with 9 Watt LED 6" Downlight	27

©2013 Energy Systems Group, LLC

EXISTING FIXTURE DESCRIPTION	PROPOSED RETROFIT DESCRIPTION	QUANTITY
13 Watt Plug-In CFL Downlight Fixture	Retrofit with 9 Watt LED 6" Downlight	3
13 Watt Plug-In CFL Jelly Jar	New 13 Watt LED Jelly Jar Fixture	10
15 Watt Compact Fluorescent 4-Lamp Fixture	Re-Lamp with (4) 10 Watt LED A19	1
15 Watt Incandescent Step Light Fixture	Re-Lamp with (1) 7 Watt LED A19	8
150 Watt High Pressure Sodium Dusk to Dawn Fixture	New 26 Watt LED Dusk to Dawn Barnyard Fixture	3
150 Watt High Pressure Sodium Fixture	Re-Lamp with (1) 36 Watt LED Omni-Cob Lamp; Hardwire Ballast	6
150 Watt High Pressure Sodium Flood Fixture	New 52 Watt LED Flood Fixture	4
150 Watt High Pressure Sodium Flood Fixture; Trunion	New 26 Watt LED Flood Fixture; Trunion	6
150 Watt High Pressure Sodium Wall Pack Fixture	New 37 Watt LED Wall Pack Fixture; Non-Dark Sky	19
150 Watt Incandescent A-Lamp Fixture	Re-Lamp with (1) 18 Watt LED A21	33
150 Watt Incandescent G40	Relamp with (1) 14 Watt LED G40	4
150 Watt Incandescent Jelly Jar	Re-Lamp with (1) 18 Watt LED A21	5
150 Watt Mercury Vapor Dusk to Dawn Fixture	New 26 Watt LED Dusk to Dawn Barnyard Fixture	3
150 Watt Mercury Vapor Fixture	Re-Lamp with (1) 36 Watt LED Omni-Cob Lamp; Hardwire Ballast	1
150 Watt Metal Halide 2-Head Flood Fixture	(2) New 52 Watt LED Flood Fixtures	2
150 Watt Metal Halide Canopy Fixture	New 20 Watt LED Canopy Fixture	2
150 Watt Metal Halide Dusk to Dawn Fixture	New 26 Watt LED Dusk to Dawn Barnyard Fixture	4
150 Watt Metal Halide Flood Fixture; Trunion	New 39 Watt LED Flood Fixture; Trunion	4
150 Watt Metal Halide Post Top Fixture	New 52 Watt LED Spider Mount Post Top Fixture	7
150 Watt Metal Halide Shoebox Fixture	New 50 Watt LED Shoebox Fixture	11
150 Watt Metal Halide Shoebox Fixture; Wall Mount	New 50 Watt LED Shoebox Fixture; Wall Mount	1
150 Watt Metal Halide Wall Pack Fixture	New 37 Watt LED Wall Pack Fixture; Non-Dark Sky	22
150 Watt Quartz 2-Head Flood Fixture	(2) New 26 Watt LED Flood Fixtures	7
150 Watt Quartz Flood Fixture	New 26 Watt LED Flood Fixture	13
16 Watt Compact Fluorescent Fixture	Re-Lamp with (1) 10 Watt LED A19	1
16 Watt Compact Fluorescent PAR38	Re-Lamp with (1) 17 Watt LED PAR38	1
175 Watt High Pressure Sodium Dusk to Dawn Fixture	New 26 Watt LED Dusk to Dawn Barnyard Fixture	1
175 Watt Mercury Vapor Dusk to Dawn Fixture	New 26 Watt LED Dusk to Dawn Barnyard Fixture	34
175 Watt Mercury Vapor Shoebox Fixture	New 78 Watt LED Shoebox Fixture	7
175 Watt Mercury Vapor Wall Pack Fixture	New 37 Watt LED Wall Pack Fixture; Non-Dark Sky	3
175 Watt Metal Halide 3-Head Shoebox	(3) New 78 Watt LED Shoebox Fixtures	1
175 Watt Metal Halide Cylinder Fixture	New 40 Watt LED Cylinder Fixture	11
175 Watt Metal Halide Dusk to Dawn Fixture	New 26 Watt LED Dusk to Dawn Barnyard Fixture	15
175 Watt Metal Halide Flood Fixture	New 52 Watt LED Flood Fixture	1
175 Watt Metal Halide Flood Fixture; Trunion	New 39 Watt LED Flood Fixture; Trunion	2
175 Watt Metal Halide Low Bay Fixture	New 40 Watt LED Canopy Fixture	4
175 Watt Metal Halide Shoebox Fixture	New 78 Watt LED Shoebox Fixture	32
175 Watt Metal Halide Wall Pack Fixture	New 37 Watt LED Wall Pack Fixture; Non-Dark Sky	10
18 Watt Compact Fluorescent 2-Lamp Fixture	Re-Lamp with (2) 10 Watt LED A19	1
	New 1x2 2-Lamp Vanity Fixture with (2) 10 Watt LED 2' Lamps; Direct Wire to Socket	1
18 Watt Compact Fluorescent 2-Lamp Globe Fixture	Re-Lamp with (2) 8 Watt LED G25 Globe	1
18 Watt Compact Fluorescent 2-Lamp PAR30 Fixture	Re-Lamp with (2) 10 Watt LED PAR30	1
18 Watt Compact Fluorescent 3-Lamp Fixture	Re-Lamp with (3) 10 Watt LED A19	2
18 Watt Compact Fluorescent Canopy Fixture	Re-Lamp with (1) 10 Watt LED A19	2
18 Watt Compact Fluorescent Downlight Fixture	Re-Lamp with (1) 10 Watt LED BR30	2
18 Watt Compact Fluorescent Fixture	Re-Lamp with (1) 10 Watt LED A19	111
18 Watt Compact Fluorescent Fixture; Very Difficult Access	Relamp with (1) 10 Watt LED A19; Very Difficult Access	2
18 Watt Compact Fluorescent Jelly Jar	Re-Lamp with (1) 10 Watt LED A19	25
18 Watt Compact Fluorescent Jelly Jar Fixture; Damaged	New 10 Watt LED A19 Jelly Jar	11
18 Watt Compact Fluorescent Wall Pack Fixture	New 12 Watt LED Wall Pack Fixture	9
18 Watt Compat Fluorescent 4-Lamp Fixture	Re-Lamp with (4) 10 Watt LED A19	2
20 Watt Incandescent 6-Lamp Globe Fixture	Relamp with (6) 8 Watt LED G25	1
20 Watt Incandescent MR11	Re-Lamp with (1) 2 Watt LED MR11 Elevator Lamp	4
200 Watt Incandescent A-Lamp Fixture	Re-Lamp with (1) 18 Watt LED A21	11
200 Watt Incandescent Jelly Jar	Re-Lamp with (1) 18 Watt LED A21	11
	New 26 Watt LED Jelly Jar Fixture	1
200 Watt Incandescent RLM Fixture	Re-Lamp with (1) 18 Watt LED A21	13
200 Watt Incandescent RLM; Difficult Access	Relamp with (1) 18 Watt LED A21; Difficult Access	1
22 Watt Incandescent A-Lamp Fixture	Re-Lamp with (1) 7 Watt LED A19	2
23 Wat Compact Fluorescent 3-Lamp Fixture	Re-Lamp with (3) 10 Watt LED A19	6
23 Watt Comapct Fluorescent	Re-Lamp with (1) 10 Watt LED A19	4
23 Watt Compact Fluorescent 2-Lamp Fixture	Re-Lamp with (2) 10 Watt LED A19	64
23 Watt Compact Fluorescent 2-Lamp Fixture; Very Difficult Access	Relamp with (2) 10 Watt LED A19 Lamps; Very Difficult Access	2
23 Watt Compact Fluorescent 2-Lamp PAR38	Re-Lamp with (2) 17 Watt LED PAR38	17
23 Watt Compact Fluorescent 2-Lamp R30	Relamp with (2) 10 Watt LED BR30	1
23 Watt Compact Fluorescent 2-Lamp R40 Fixture	Relamp with (2) 17 Watt LED BR40	3
23 Watt Compact Fluorescent 4-Lamp Fixture	Re-Lamp with (4) 10 Watt LED A19	1
23 Watt Compact Fluorescent 5-Lamp Fixture	Re-Lamp with (5) 10 Watt LED A19	5
23 Watt Compact Fluorescent Canopy Fixture	Re-Lamp with (1) 10 Watt LED A19	25
	New 10 Watt LED Canopy Fixture	26
23 Watt Compact Fluorescent Downlight	Re-Lamp with (1) 10 Watt LED BR30	23
	Retrofit with 9 Watt LED 6" Downlight	2
23 Watt Compact Fluorescent Drum Fixture; Damaged	Re-Lamp with (1) 10 Watt LED A19	1
23 Watt Compact Fluorescent Explosion Proof Fixture	Relamp with (1) 10 Watt LED A19; Difficult Access	1
23 Watt Compact Fluorescent Fixture	Re-Lamp with (1) 10 Watt LED A19	644
23 Watt Compact Fluorescent Fixture; Difficult Access	Relamp with (1) 10 Watt LED A19; Difficult Access	1
23 Watt Compact Fluorescent Goose Neck Fixture	Re-Lamp with (1) 10 Watt LED A19	1

©2013 Energy Systems Group, LLC

EXISTING FIXTURE DESCRIPTION	PROPOSED RETROFIT DESCRIPTION	QUANTITY
23 Watt Compact Fluorescent Jelly Jar	Re-Lamp with (1) 10 Watt LED A19	62
23 Watt Compact Fluorescent PAR38 Fixture	Re-Lamp with (1) 17 Watt LED PAR38	1
23 Watt Compact Fluorescent R30	Re-Lamp with (1) 10 Watt LED BR30	2
23 Watt Compact Fluorescent R40	Re-Lamp with (1) 17 Watt LED BR40	3
23 Watt Compact Fluorescent Step Light Fixture	Re-Lamp with (1) 10 Watt LED A19	1
23 Watt Compact Fluorescent Wall Pack Fixture	New 24 Watt LED Wall Pack Fixture; Non-Dark Sky	28
23 Watt Compact Fluroescent Globe Fixture	Re-Lamp with (1) 10 Watt LED A19	3
	Re-Lamp with (1) 8 Watt LED G25 Globe	2
23 Watt Compct Fluorescent Jelly Jar Fixture; Damaged	New 10 Watt LED A19 Jelly Jar	1
25 Watt Incandescent 2-Lamp A-Lamp	Re-Lamp with (2) 7 Watt LED A19	1
25 Watt Incandescent 2-Lamp Candelabra	Re-Lamp with (1) 5 Watt LED Candelabra	1
25 Watt Incandescent 2-Lamp Exit Sign	New 3 watt LED Exit Sign	47
25 Watt Incandescent 3-Lamp A-Lamp	Re-Lamp with (3) 7 Watt LED A19	1
25 Watt Incandescent 3-Lamp Candelabra	Re-Lamp with (3) 5 Watt LED Candelabra	1
25 Watt Incandescent 4-Lamp Globe Fixture	Re-Lamp with (4) 8 Watt LED G25 Globe	1
25 Watt Incandescent 5-Lamp Fixture	Re-Lamp with (5) 7 Watt LED A19	1
25 Watt Incandescent A-Lamp	Re-Lamp with (1) 7 Watt LED A19	1
250 Watt High Pressure Sodium 2-Head Flood	(2) New 125 Watt LED Flood Fixtures	2
250 Watt High Pressure Sodium Dusk to Dawn Fixture	New 26 Watt LED Dusk to Dawn Barnyard Fixture	6
250 Watt High Pressure Sodium Flood Fixture	New 125 Watt LED Flood Fixture	12
250 Watt Mercury Vapor Cobra Head Fixture	New 95 Watt LED Cobra Head Fixture	3
250 Watt Mercury Vapor Dusk to Dawn Fixture	New 26 Watt LED Dusk to Dawn Barnyard Fixture	5
250 Watt Mercury Vapor Shoebox Fixture	New 125 Watt LED Shoebox Fixture	12
250 Watt Metal Halide 2-Head Flood Fixture; Trunion	(2) New 125 Watt LED Flood Fixtures; Trunion	2
250 Watt Metal Halide 2-Head Shoebox Fixture	(2) New 125 Watt LED Shoebox Fixtures	1
250 Watt Metal Halide 2-Head Shoebox Fixture; White	(2) New 125 Watt LED Shoebox Fixtures; White	12
250 Watt Metal Halide 3-Head Flood Fixture	(3) New 125 Watt LED Flood Fixtures	1
250 Watt Metal Halide Canopy Fixture	New 52 Watt LED Canopy Fixture	2
250 Watt Metal Halide Cobra Head Fixture	New 64 Watt LED Cobra Head Fixture	1
250 Watt Metal Halide Flood Fixture	New 125 Watt LED Flood Fixture	3
250 Watt Metal Halide Flood Fixture; Trunion	New 125 Watt LED Flood Fixture; Trunion	5
250 Watt Metal Halide Shoebox Fixture	New 125 Watt LED Shoebox Fixture	20
250 Watt Metal Halide Wall Pack Fixture	New 55 Watt LED Wall Pack Fixture; Non-Dark Sky	3
26 Watt Compact Fluorescent 12" Downlight Fixture	Retrofit with 12 Watt LED 12" Downlight	2
26 Watt Compact Fluorescent 2-Lamp Fixture	Re-Lamp with (2) 10 Watt LED A19	35
26 Watt Compact Fluorescent 3-Lamp Fixture	Re-Lamp with (3) 10 Watt LED A19	14
26 Watt Compact Fluorescent 4-Lamp Fixture	Re-Lamp with (4) 10 Watt LED A19	3
26 Watt Compact Fluorescent 5-Lamp Fixture	Re-Lamp with (5) 10 Watt LED A19	13
26 Watt Compact Fluorescent Canopy Fixture	Re-Lamp with (1) 10 Watt LED A19	11
	New 10 Watt LED Canopy Fixture	16
26 Watt Compact Fluorescent Downlight	Re-Lamp with (1) 10 Watt LED BR30	15
26 Watt Compact Fluorescent Fixture	Re-Lamp with (1) 10 Watt LED A19	120
26 Watt Compact Fluorescent Jelly Jar Fixture; Damaged	New 10 Watt LED A19 Jelly Jar	6
26 Watt Compact Fluorescent Wall Pack	New 24 Watt LED Wall Pack Fixture; Non-Dark Sky	12
26 Watt Plug-In CFL 2-Lamp 7" Downlight	Retrofit with 13 Watt LED 6" Downlight Kit	3
26 Watt Plug-In CFL 2-Lamp 8" Downlight	Retrofit with 13 Watt LED 8" Downlight	1
	Retrofit with 13 Watt LED 6" Downlight Kit	1
26 Watt Plug-In CFL 2-Lamp Canopy Fixture	New 10 Watt LED Canopy Fixture	2
26 Watt Plug-In CFL 4" Downlight Fixture	Retrofit with 13 Watt LED 4" Downlight	6
26 Watt Plug-In CFL Bollard Fixture	New 12 Watt LED Bollard Fixture	4
26 Watt Plug-In CFL Jelly Jar	New 13 Watt LED Jelly Jar Fixture	1
26 Watt Plug-In CFL Wall Pack Fixture	New 24 Watt LED Wall Pack Fixture; Non-Dark Sky	9
30 Watt Incandescent A-Lamp Fixture	Re-Lamp with (1) 7 Watt LED A19	3
300 Watt Incandescent A-Lamp Fixture	Re-Lamp with (1) 27 Watt LED Omni-Cob Lamp; Hardwire Ballast	12
300 Watt Incandescent Jelly Jar	New 26 Watt LED Jelly Jar Fixture	1
300 Watt Quartz Flood Fixture	New 52 Watt LED Flood Fixture	8
32 Watt Compact Fluorescent 2-Lamp Fixture	Re-Lamp with (2) 10 Watt LED A19	1
32 Watt Compact Fluorescent Fixture	Re-Lamp with (1) 10 Watt LED A19	6
35 Watt High Pressure Sodium Wall Pack Fixture	New 12 Watt LED Wall Pack Fixture	3
40 Watt Compact Fluorescent Dusk-to-Dawn Fixture	New 26 Watt LED Dusk to Dawn Barnyard Fixture	1
40 Watt Incandescent 2-Lamp Candelabra Fixture	Re-Lamp with (2) 5 Watt LED Candelabra	5
40 Watt Incandescent 2-Lamp Fixture	Re-Lamp with (2) 7 Watt LED A19	8
40 Watt Incandescent 3-Lamp Candelabra Fixture	Re-Lamp with (3) 5 Watt LED Candelabra	17
40 Watt Incandescent 3-Lamp Fixture	Re-Lamp with (3) 7 Watt LED A19	5
40 Watt Incandescent 4-Lamp Candelabra Fixture	Re-Lamp with (4) 5 Watt LED Candelabra	8
40 Watt Incandescent 4-Lamp Fixture	Re-Lamp with (3) 7 Watt LED A19	2
	Re-Lamp with (4) 7 Watt LED A19	11
40 Watt Incandescent 4-Lamp Globe	Re-Lamp with (4) 8 Watt LED G25 Globe	3
40 Watt Incandescent 5-Lamp A-Lamp	Re-Lamp with (5) 7 Watt LED A19	4
40 Watt Incandescent 6-Lamp Globe Fixture	Relamp with (6) 8 Watt LED G25	6
40 Watt Incandescent A-Lamp Fixture	Re-Lamp with (1) 7 Watt LED A19	13
40 Watt Incandescent Candelabra Fixture	Re-Lamp with (1) 5 Watt LED Candelabra	21
40 Watt Incandescent Globe Fixture	Re-Lamp with (1) 8 Watt LED G25 Globe	13
40 Watt Incandescent R20	Re-Lamp with (1) 8 Watt LED BR20	4
40 Watt Incandescent S14	Relamp with (1) 5 Watt LED S14	30
400 Watt High Pressure Sodium 3-Head Flood Fixture; Trunion	(3) New 150 Watt LED Flood Fixtures; Trunion	1
400 Watt High Pressure Sodium Flood Fixture	New 150 Watt LED Flood Fixture	6

©2013 Energy Systems Group, LLC

EXISTING FIXTURE DESCRIPTION	PROPOSED RETROFIT DESCRIPTION	QUANTITY
400 Watt High Pressure Sodium Flood Fixture; Trunion	New 150 Watt LED Flood Fixture; Trunion	7
400 Watt High Pressure Sodium High Bay Fixture; Plug & Cord	New 150 Watt LED High Bay Fixture	9
400 Watt Mercury Vapor Shoebox Fixture	New 150 Watt LED Shoebox Fixture	7
400 Watt Metal Halide 2-Head Shoebox Fixture	(2) New 150 Watt LED Shoebox Fixtures	5
400 Watt Metal Halide Flood Fixture; Trunion	New 150 Watt LED Flood Fixture; Trunion	177
	(3) New 150 Watt LED Flood Fixtures; Trunion	2
400 Watt Metal Halide Highbay Fixture	New 150 Watt LED High Bay Fixture	1
400 Watt Metal Halide Shoebox Fixture	New 150 Watt LED Shoebox Fixture	17
42 Watt Compact Fluorescent 10" Downlight Fixture	Re-Lamp with (1) 17 Watt LED BR40	18
42 Watt Compact Fluorescent 12" Downlight Fixture	Re-Lamp with (1) 17 Watt LED BR40	58
42 Watt Compact Fluorescent Canopy Fixture	Re-Lamp with (1) 18 Watt LED A21	4
42 Watt Compact Fluorescent Downlight Fixture	Retrofit with 22 Watt LED 6" Downlight	10
42 Watt Compact Fluorescent Downlight Fixture; Very Difficult Access	Retrofit with 22 Watt LED 6" Downlight; Very Dificult Access	10
42 Watt Compact Fluorescent Fixture	Re-Lamp with (1) 18 Watt LED A21	20
42 Watt Compact Fluorescent Wall Pack Fixture	Re-Lamp with (1) 18 Watt LED A21	1
	New 24 Watt LED Wall Pack Fixture; Non-Dark Sky	1
42 Watt Plug-In CFL 2-Lamp Canopy Fixture	New 10 Watt LED Canopy Fixture	2
42 Watt Plug-In CFL 2-Lamp Downlight Fixture	Retrofit with 22 Watt LED 6" Downlight	2
42 Watt Plug-In CFL 2-Lamp Wall Pack Fixture	New 24 Watt LED Wall Pack Fixture; Non-Dark Sky	14
42 Watt Plug-In CFL Downlight Fixture	Retrofit with 9 Watt LED 6" Downlight	3
42 Watt Plug-In CFL Wall Pack Fixture	New 24 Watt LED Wall Pack Fixture; Non-Dark Sky	4
43 Watt Compact Fluorescent Fixture	Re-Lamp with (1) 18 Watt LED A21	1
50 Watt High Pressure Sodium 8" Downlight Fixture	Retrofit with 13 Watt LED 8" Downlight	5
50 Watt High Pressure Sodium Recessed Fixture	Re-Lamp with (1) 19 Watt LED Omni-Cob Lamp; Hardwire Ballast	1
50 Watt Incandescent 5-Lamp Candelabra Fixture	Re-Lamp with (5) 5 Watt LED Candelabra	1
50 Watt Incandescent MR16 Fixture	Re-Lamp with (1) 7 Watt LED MR16	97
50 Watt Incandescent PAR20	Re-Lamp with (1) 8 Watt LED PAR20	4
50 Watt Incandescent PAR20 6-Lamp Fixture	Relamp with (6) 8 Watt LED PAR20	12
50 Watt Incandescent PAR30 Fixture	Re-Lamp with (1) 10 Watt LED PAR30	6
50 Watt Incandescent R20 Fixture	Re-Lamp with (1) 8 Watt LED BR20	6
50 Watt Metal Halide 8" Downlight	Retrofit with 13 Watt LED 8" Downlight	1
50 Watt Metal Halide Bollard Fixture	New 12 Watt LED Bollard Fixture	7
50 Watt Metal Halide Downlight Fixture	Retrofit with 9 Watt LED 6" Downlight	14
50 Watt Metal Halide Wall Pack Fixture	New 24 Watt LED Wall Pack Fixture; Non-Dark Sky	28
	Re-Lamp with (1) 19 Watt LED Omni-Cob Lamp; Hardwire Ballast	10
500 Watt 2-Head Quartz Flood	(2) New 52 Watt LED Flood Fixtures	1
500 Watt Quartz Flood Fixture	New 52 Watt LED Flood Fixture	3
52 Watt Incandescent 2-Lamp A-Lamp	Re-Lamp with (2) 10 Watt LED A19	9
52 Watt Incandescent 5-Lamp A-Lamp	Re-Lamp with (5) 10 Watt LED A19	1
52 Watt Incandescent A-Lamp	Re-Lamp with (1) 10 Watt LED A19	21
52 Watt Incandescent Globe Fixture	Re-Lamp with (1) 8 Watt LED G25 Globe	2
60 Watt A-Lamp; Par Holder	Re-Lamp with (1) 10 Watt LED PAR30	6
60 Watt Comapct Fluorescent	Re-Lamp with (1) 27 Watt LED Omni-Cob Lamp; Hardwire Ballast	2
60 Watt Compact Fluorescent RLM Fixture	Re-Lamp with (1) 27 Watt LED Omni-Cob Lamp; Hardwire Ballast	1
60 Watt Incandescent 2-Lamp Candelabra Fixture	Re-Lamp with (2) 10 Watt LED A19	2
	Re-Lamp with (1) 5 Watt LED Candelabra	1
60 Watt Incandescent 2-Lamp Canopy	Re-Lamp with (2) 10 Watt LED A19	1
	New 10 Watt LED Canopy Fixture	8
60 Watt Incandescent 2-Lamp Fixture	Re-Lamp with (2) 10 Watt LED A19	73
60 Watt Incandescent 2-Lamp Globe Fixture	Re-Lamp with (2) 8 Watt LED G25 Globe	2
60 Watt Incandescent 3-Lamp Candelabra	Re-Lamp with (3) 10 Watt LED A19	1
	Re-Lamp with (3) 5 Watt LED Candelabra	3
60 Watt Incandescent 3-Lamp Fixture	Re-Lamp with (3) 10 Watt LED A19	25
60 Watt Incandescent 4" Downlight Fixture	Re-Lamp with (1) 10 Watt LED BR30	3
60 Watt Incandescent 4-Lamp Candelabra	Re-Lamp with (4) 5 Watt LED Candelabra	1
60 Watt Incandescent 4-Lamp Fixture	Re-Lamp with (4) 10 Watt LED A19	13
60 Watt Incandescent 4-Lamp Globe Fixture	Re-Lamp with (4) 8 Watt LED G25 Globe	1
60 Watt Incandescent 5-Lamp A-Lamp Fixture	Re-Lamp with (5) 10 Watt LED A19	5
60 Watt Incandescent 5-Lamp Candelabra	Re-Lamp with (5) 5 Watt LED Candelabra	4
60 Watt Incandescent 6-Lamp A-Lamp Fixture	Relamp with (6) 10 Watt LED A19	8
60 Watt Incandescent 6-Lamp Candelabra	Relamp with (6) 5 Watt LED Candelabra Lamps	14
60 Watt Incandescent A-Lamp Downlight Fixture	Re-Lamp with (1) 10 Watt LED BR30	32
60 Watt Incandescent A-Lamp Fixture	Re-Lamp with (1) 10 Watt LED A19	839
60 Watt Incandescent A-Lamp Goose Neck Fixture	Re-Lamp with (1) 10 Watt LED A19	1
60 Watt Incandescent A-Lamp Jelly Jar Fixture	Re-Lamp with (1) 10 Watt LED A19	92
60 Watt Incandescent A-Lamp; Damaged Keyless	New 12" Round 14 Watt LED Drum Fixture	1
60 Watt Incandescent A-Lamp; Difficult Access	Relamp with (1) 10 Watt LED A19; Difficult Access	1
60 Watt Incandescent Candelabra Fixture	Re-Lamp with (1) 5 Watt LED Candelabra	2
60 Watt Incandescent Canopy Fixture	New 10 Watt LED Canopy Fixture	22
60 Watt Incandescent Explosion Proof Fixture	Relamp with (1) 10 Watt LED A19; Difficult Access	1
60 Watt Incandescent Globe Fixture	Re-Lamp with (1) 8 Watt LED G25 Globe	34
60 Watt Incandescent Jelly Jar Fixture; Damaged	New 10 Watt LED A19 Jelly Jar	2
60 Watt Incandescent Jelly Jar Fixture; Red	Re-Lamp with (1) 10 Watt LED A19	2
60 Watt Incandescent PAR30 2-Lamp Fixture	Re-Lamp with (2) 10 Watt LED PAR30	1
60 Watt Incandescent PAR30 Fixture	Re-Lamp with (1) 10 Watt LED PAR30	18
60 Watt Incandescent R40	Re-Lamp with (1) 17 Watt LED BR40	5
60 Watt Incandescent Wall Pack Fixture	Re-Lamp with (1) 10 Watt LED A19	4

©2013 Energy Systems Group, LLC

EXISTING FIXTURE DESCRIPTION	PROPOSED RETROFIT DESCRIPTION	QUANTITY
60 Watt Incandescent Wall Pack Fixture	New 24 Watt LED Wall Pack Fixture; Non-Dark Sky	20
65 Watt Incandescent 2-Lamp Fixture	Re-Lamp with (2) 10 Watt LED A19	1
65 Watt Incandescent 2-Lamp PAR30	Re-Lamp with (2) 10 Watt LED PAR30	2
65 Watt Incandescent 3-Lamp Fixture	Relamp with (3) 10 Watt LED A19	1
65 Watt Incandescent PAR30 Fixture	Re-Lamp with (1) 10 Watt LED PAR30	6
65 Watt Incandescent PAR38	Re-Lamp with (1) 17 Watt LED PAR38	30
65 Watt Incandescent PAR38 2-Lamp Fixture	Re-Lamp with (2) 17 Watt LED PAR38	1
65 Watt Incandescent R30 2-Lamp Fixture	Relamp with (2) 10 Watt LED BR30	1
65 Watt Incandescent R30 3-Lamp Fixture	Relamp with (3) 10 Watt LED BR30	4
65 Watt Incandescent R30 Downlight Fixture	Re-Lamp with (1) 10 Watt LED BR30	36
65 Watt Incandescent R30 Fixture	Re-Lamp with (1) 10 Watt LED BR30	106
65 Watt Incandescent R30 RLM Fixture	Re-Lamp with (1) 10 Watt LED A19	10
70 Watt High Pressure Sodium 8" Downlight Fixture	Retrofit with (1) 42 Watt 8" LED Downlight	2
70 Watt High Pressure Sodium Canopy Fixture	New 20 Watt LED Canopy Fixture	9
70 Watt High Pressure Sodium Dusk to Dawn Fixture	New 26 Watt LED Dusk to Dawn Barnyard Fixture	14
70 Watt High Pressure Sodium Recessed	Re-Lamp with (1) 27 Watt LED Omni-Cob Lamp; Hardwire Ballast	5
70 Watt High Pressure Sodium Wall Pack Fixture	New 24 Watt LED Wall Pack Fixture; Non-Dark Sky	33
70 Watt Metal Halide Cylinder Fixture; Wall Mount	New 40 Watt LED Cylinder Fixture; Wall Mount	2
70 Watt Metal Halide Dusk to Dawn Fixture	New 26 Watt LED Dusk to Dawn Barnyard Fixture	2
70 Watt Metal Halide Flood Fixture	New 18 Watt LED Flood Fixture	1
70 Watt Metal Halide Wall Pack Fixture	New 24 Watt LED Wall Pack Fixture; Non-Dark Sky	5
70 Watt Metal Halide Wall Pack Fixture; Silver	New 24 Watt LED Wall Pack Fixture; Non-Dark Sky; Difficult Access	4
75 Watt Incandescent 2-Lamp Fixture	Re-Lamp with (2) 10 Watt LED A19	1
75 Watt Incandescent 3-Lamp Fixture	Re-Lamp with (3) 10 Watt LED A19	1
75 Watt Incandescent 5-Lamp Globe Fixture	Re-Lamp with (5) 8 Watt LED G25 Globe	1
75 Watt Incandescent A-Lamp Downlight Fixture	Re-Lamp with (1) 10 Watt LED BR30	2
75 Watt Incandescent A-Lamp Fixture	Re-Lamp with (1) 10 Watt LED A19	64
75 Watt Incandescent A-Lamp Jelly Jar Fixture	Re-Lamp with (1) 10 Watt LED A19	24
75 Watt Incandescent A-Lamp; PAR Holder	Re-Lamp with (1) 10 Watt LED PAR30	2
75 Watt Incandescent Canopy	New 10 Watt LED Canopy Fixture	1
75 Watt Incandescent Explosion Proof Fixture	Relamp with (1) 10 Watt LED A19; Difficult Access	1
75 Watt Incandescent Jelly Jar Fixture; Damaged	New 18 Watt LED A21 Jelly Jar Fixture	3
75 Watt Incandescent PAR30 Fixture	Re-Lamp with (1) 10 Watt LED PAR30	11
75 Watt Incandescent PAR38	Re-Lamp with (1) 17 Watt LED PAR38	52
75 Watt Incandescent PAR38 2-Lamp	Re-Lamp with (2) 17 Watt LED PAR38	19
75 Watt Incandescent PAR38 3-Lamp Fixture	Relamp with (3) 17 Watt LED PAR38	8
80 Watt Compact Fluorescent	Re-Lamp with (1) 36 Watt LED Omni-Cob Lamp; Hardwire Ballast	8
9 Watt Compact Fluorescent 2-Lamp Fixture	Re-Lamp with (2) 7 Watt LED A19	20
9 Watt Compact Fluorescent 3-Lamp Fixture	Re-Lamp with (3) 7 Watt LED A19	10
9 Watt Compact Fluorescent 4-Lamp Fixture	Re-Lamp with (4) 7 Watt LED A19	10
9 Watt Compact Fluorescent Fixture	Re-Lamp with (1) 7 Watt LED A19	10
90 Watt Incandescent 3-Lamp PAR38 Fixture	Relamp with (3) 17 Watt LED PAR38	4
90 Watt Incandescent A-Lamp Fixture	Re-Lamp with (1) 18 Watt LED A21	2
90 Watt Incandescent PAR38 2-Lamp Fixture	Re-Lamp with (2) 17 Watt LED PAR38	37
90 Watt Incandescent PAR38 Fixture	Re-Lamp with (1) 17 Watt LED PAR38	65
90 Watt Incandescent R40	Re-Lamp with (1) 17 Watt LED PAR38	12
95 Watt Incandescent PAR38 2-Lamp Fixture	Re-Lamp with (2) 17 Watt LED PAR38	5
95 Watt Incandescent PAR38 Fixture	Re-Lamp with (1) 17 Watt LED PAR38	1
Circline Fixture; Damaged	New 16" Round 22 Watt LED Drum Fixture	1
Incandescent Exit Sign; Combo Emergency Heads	New 3 watt LED Exit Sign with Emergency Combo Heads	69
Incandescent Exit Sign; Green	New 3 watt LED Exit Sign	6
T12 1x3 2-Lamp Vanity Fixture; Damaged	Socket	1
T12 1x4 1-Lamp Strip Fixture	Retrofit with (1) 12.5 Watt LED T8 4' Lamps; Direct Wire to Socket	4
T12 1x4 1-Lamp Vanity Fixture	Retrofit with (1) 12.5 Watt LED T8 4' Lamps; Direct Wire to Socket	4
T12 1x4 1-Lamp Vaportight Fixture	Retrofit with (1) 12.5 Watt LED T8 4' Lamps; Direct Wire to Socket	1
T12 1x4 1-Lamp Wrap Fixture	Retrofit with (1) 12.5 Watt LED T8 4' Lamps; Direct Wire to Socket	1
T12 1x4 2-Lamp Fixture	Retrofit with (2) 12.5 Watt LED T8 4' Lamps; Direct Wire to Socket	16
T12 1x4 2-Lamp Egg Crate Fixture	Socket	9
T12 1x4 2-Lamp Industrial Strip Fixture	Retrofit with (2) 12.5 Watt LED T8 4' Lamps; Direct Wire to Socket	268
T12 1x4 2-Lamp Industrial Strip Fixture; Damaged	Socket	1
T12 1x4 2-Lamp Industrial Strip Fixture; Turret	Socket	62
	Socket	3
T12 1x4 2-Lamp Industrial Strip Fixture; Turret; Difficult Access	Socket	36
T12 1x4 2-Lamp Industrial; Difficult Access	Retrofit with (2) 12.5 Watt LED T8 4' Lamps; Direct Wire to Socket; Difficult Access	2
T12 1x4 2-Lamp Strip Fixture	Retrofit with (2) 12.5 Watt LED T8 4' Lamps; Direct Wire to Socket	142
T12 1x4 2-Lamp Surface Mount Fixture	Retrofit with (2) 12.5 Watt LED T8 4' Lamps; Direct Wire to Socket	1
T12 1x4 2-Lamp Vanity Fixture	Retrofit with (2) 12.5 Watt LED T8 4' Lamps; Direct Wire to Socket	16
T12 1x4 2-Lamp Vanity Fixture; Damaged	Socket	23
T12 1x4 2-Lamp Vaportight Fixture	Retrofit with (2) 12.5 Watt LED T8 4' Lamps; Direct Wire to Socket	257
T12 1x4 2-Lamp Vaportight Fixture; Damaged	Socket	32
T12 1x4 2-Lamp Wrap Fixture	Retrofit with (2) 12.5 Watt LED T8 4' Lamps; Direct Wire to Socket	270
T12 1x4 2-Lamp Wrap Fixture; Damaged	Socket	64
T12 1x4 2-Lamp Wrap Fixture; Difficult Access	Retrofit with (2) 12.5 Watt LED T8 4' Lamps; Direct Wire to Socket; Difficult Access	8
T12 1x4 3-Lamp Troffer Fixture	Retrofit with (3) 12.5 Watt LED T8 4' Lamps; Direct Wire to Socket	14
T12 1x4 3-Lamp Wrap Fixture	Retrofit with (3) 12.5 Watt LED T8 4' Lamps; Direct Wire to Socket	2
T12 1x4 4-Lamp Direct/Indirect Fixture	Retrofit with (4) 12.5 Watt LED T8 4' Lamps; Direct Wire to Socket	4
T12 1x4 4-Lamp Egg Crate Fixture	Socket	7

©2013 Energy Systems Group, LLC

EXISTING FIXTURE DESCRIPTION	PROPOSED RETROFIT DESCRIPTION	QUANTITY
T12 1x4 4-Lamp Strip Fixture	Retrofit with (4) 12.5 Watt LED T8 4' Lamps; Direct Wire to Socket	2
T12 1x4 4-Lamp Troffer Fixture	Retrofit with (4) 12.5 Watt LED T8 4' Lamps; Direct Wire to Socket	13
T12 1x4 4-Lamp Wrap Fixture	Retrofit with (4) 12.5 Watt LED T8 4' Lamps; Direct Wire to Socket	98
T12 1x4 4-Lamp Wrap Fixture; Damaged	Socket	33
T12 1x8 1-Lamp Industrial Fixture; Turret	Socket	9
T12 1x8 1-Lamp Wrap Fixture with 60 Watt Lamps	Socket	2
T12 1x8 2-Lamp Egg Crate Fixture	Socket	2
T12 1x8 2-Lamp Industrial Strip Fixture with 60 Watt Lamps	Direct Wire to Socket	69
T12 1x8 2-Lamp Industrial Strip Fixture with 75 Watt Lamps	Direct Wire to Socket	12
T12 1x8 2-Lamp Industrial Strip Fixture; Difficult Access	Direct Wire to Socket; Difficult Access	12
T12 1x8 2-Lamp Strip Fixture with 60 Watt Lamps	Socket	80
T12 1x8 2-Lamp Strip Fixture with 75 Watt Lamps	Socket	9
T12 1x8 2-Lamp Vaportight Fixture with 60 Watt Lamps	Socket	7
T12 1x8 2-Lamp Vaportight Fixture with 75 Watt Lamps	Socket	6
T12 1x8 2-Lamp Wrap Fixture with 60 Watt Lamps	Socket	2
T12 1x8 2-Lamp Wrap Fixture; Damaged	Socket	16
T12 1x8 3-Lamp Industrial Strip Fixture; Turret	Wire to Socket	10
T12 1x8 4-Lamp Industrial Fixture; Turret	Socket	7
T12 2x2 1-Lamp Strip Fixture	Retrofit with (1) 10 Watt LED T8 2' Lamp; Direct Wire to Socket	2
T12 2x2 1-Lamp Troffer Fixture	Retrofit with (1) 10 Watt LED T8 2' Lamp; Direct Wire to Socket	3
T12 2x2 2-Lamp Strip Fixture	Retrofit with (2) 10 Watt LED T8 2' Lamps; Direct Wire to Socket	3
T12 2x2 2-Lamp U-Lamp Troffer Fixture with 6" Lamps	Direct Wire to Socket	63
T12 2x2 2-Lamp Vanity Fixture	Retrofit with (2) 10 Watt LED T8 2' Lamps; Direct Wire to Socket	12
T12 2x2 2-Lamp Wrap Fixture	Retrofit with (2) 10 Watt LED T8 2' Lamps; Direct Wire to Socket	4
T12 2x2 4-Lamp Surface Mount Fixture	Retrofit with (4) 10 Watt LED T8 2' Lamps; Direct Wire to Socket	4
T12 2x3 1-Lamp Strip Fixture	Retrofit with (1) 12 Watt LED T8 3' Lamp; Direct Wire to Socket	1
T12 2x3 1-Lamp Troffer Fixture	Retrofit with (1) 12 Watt LED T8 3' Lamp; Direct Wire to Socket	1
T12 2x3 2-Lamp Strip Fixture	Retrofit with (2) 12 Watt LED T8 3' Lamps; Direct Wire to Socket	2
T12 2x3 2-Lamp Vanity Fixture	Retrofit with (2) 12 Watt LED T8 3' Lamps; Direct Wire to Socket	1
T12 2x4 2-Lamp Surface Mount Fixture	Retrofit with (2) 12.5 Watt LED T8 4' Lamps; Direct Wire to Socket	71
T12 2x4 2-Lamp Surface Mount Fixture; Difficult Access	Retrofit with (2) 12.5 Watt LED T8 4' Lamps; Direct Wire to Socket	6
T12 2x4 2-Lamp Troffer Fixture	Retrofit with (2) 12.5 Watt LED T8 4' Lamps; Direct Wire to Socket	105
T12 2x4 2-Lamp Volumetric Troffer Fixture	Retrofit with (2) 12.5 Watt LED T8 4' Lamps; Direct Wire to Socket	53
T12 2x4 3-Lamp Troffer Fixture	Retrofit with (3) 12.5 Watt LED T8 4' Lamps; Direct Wire to Socket	4
T12 2x4 4-Lamp Surface Mount Fixture	Retrofit with (4) 12.5 Watt LED T8 4' Lamps; Direct Wire to Socket	65
T12 2x4 4-Lamp Surface Mount Fixture; Damaged	Socket	2
T12 2x4 4-Lamp Surface Mount Fixture; Difficult Access	Retrofit with (4) 14 Watt LED T8 4' Lamps and (2) Dimming Driver	1
T12 2x4 4-Lamp Troffer Fixture	Retrofit with (4) 12.5 Watt LED T8 4' Lamps; Direct Wire to Socket	226
T12 2x4 4-Lamp Troffer Fixture; Damaged	to Socket	10
T12HO 1x8 2-Lamp Industrial Fixture; Turret	Socket	1
T12HO 1x8 2-Lamp Industrial Fixture; Turret; Difficult Access	Socket; Difficult Access	8
T12HO 1x8 2-Lamp Industrial Strip Fixture with 110 Watt Lamps	Direct Wire to Socket	23
T12HO 1x8 2-Lamp Industrial Strip Fixture with 95 Watt Lamps	Direct Wire to Socket	8
T12HO 1x8 2-Lamp Strip Fixture with 110 Watt Lamps	Socket	45
T12HO 1x8 2-Lamp Strip Fixture with 95 Watt Lamps	Socket	9
T12HO 1x8 3-Lamp Indsutrial Strip Fixture; Turret	Wire to Socket	5
T12VHO 1x8 2-Lamp Industrial Strip Fixture; Turret	Wire to Socket	7
T12VHO 1x8 2-Lamp Strip Fixture	Wire to Socket	4
T5 1x4 4-Lamp Wrap Fixture	Retrofit with (4) 13 Watt LED T5 4' Lamps; Direct Wire to Socket	3
T5 2x2 2-Lamp Surface Mount Fixture	Retrofit with (2) 9 Watt LED 2' T5 Lamps; Direct Wire to Socket	41
T5 2x2 2-Lamp Troffer Fixture	Retrofit with (2) 9 Watt LED 2' T5 Lamps; Direct Wire to Socket	12
T5HO 2x4 6-Lamp High Bay Fixture	New 150 Watt LED High Bay Fixture	6
T8 1x2 2-Lamp Vanity Fixture	Retrofit with (2) 10 Watt LED T8 2' Lamps; Direct Wire to Socket	41
T8 1x2 2-Lamp Wrap Fixture; Damaged	Socket	1
T8 1x3 2-Lamp Strip Fixture; Difficult Access	Retrofit with (2) 12 Watt LED T8 3' Lamps; Direct Wire to Socket; Difficult Access	4
T8 1x3 3-Lamp Strip Fixture; Difficult Access	Retrofit with (3) 12 Watt LED T8 3' Lamps; Direct Wire to Socket	6
T8 1x4 1-Lamp Strip Fixture	Retrofit with (1) 12.5 Watt LED T8 4' Lamps; Direct Wire to Socket	3
T8 1x4 1-Lamp Vanity Fixture	Retrofit with (1) 12.5 Watt LED T8 4' Lamps; Direct Wire to Socket	13
T8 1x4 1-Lamp Vaportight Fixture	Retrofit with (1) 12.5 Watt LED T8 4' Lamps; Direct Wire to Socket	1
T8 1x4 1-Lamp Wrap Fixture	Retrofit with (1) 12.5 Watt LED T8 4' Lamps; Direct Wire to Socket	21
T8 1x4 2-Lamp Angle Fixture	Retrofit with (2) 12.5 Watt LED T8 4' Lamps; Direct Wire to Socket	11
T8 1x4 2-Lamp Direct/Indirect Linear Fixture	Retrofit with (2) 12.5 Watt LED T8 4' Lamps; Direct Wire to Socket	123
T8 1x4 2-Lamp Direct/Indirect Linear Fixture; Dimming	Retrofit with (2) 14 Watt LED T8 4' Lamps and (1) Dimming Driver	1
T8 1x4 2-Lamp Industrial Strip Fixture	Retrofit with (2) 12.5 Watt LED T8 4' Lamps; Direct Wire to Socket	81
T8 1x4 2-Lamp Industrial Strip Fixture; Turret	Socket	125
T8 1x4 2-Lamp Strip Fixture	Retrofit with (2) 12.5 Watt LED T8 4' Lamps; Direct Wire to Socket	74
T8 1x4 2-Lamp Strip Fixture; Difficult Access	Retrofit with (2) 12.5 Watt LED T8 4' Lamps; Direct Wire to Socket; Difficult Access	4
T8 1x4 2-Lamp Strip Fixture; Dimming; Difficult Access	Retrofit with (2) 14 Watt LED T8 4' Lamps and (1) Dimming Driver; Difficult Access	12
T8 1x4 2-Lamp Troffer Fixture	Retrofit with (2) 12.5 Watt LED T8 4' Lamps; Direct Wire to Socket	3
T8 1x4 2-Lamp Troffer Fixture with 28 Watt Lamps	Retrofit with (2) 12.5 Watt LED T8 4' Lamps; Direct Wire to Socket	2
T8 1x4 2-Lamp Vanity Fixture	Retrofit with (2) 12.5 Watt LED T8 4' Lamps; Direct Wire to Socket	166
T8 1x4 2-Lamp Vanity Fixture; Damaged	New 1x2 2-Lamp Vanity Fixture with (2) 10 Watt LED 2' Lamps; Direct Wire to Socket	1
T8 1x4 2-Lamp Vaportight Fixture	Retrofit with (2) 12.5 Watt LED T8 4' Lamps; Direct Wire to Socket	303
T8 1x4 2-Lamp Vaportight Fixture; Damaged	Socket	6
T8 1x4 2-Lamp Vaportight Fixture; Difficult Access	Retrofit with (2) 12.5 Watt LED T8 4' Lamps; Direct Wire to Socket; Difficult Access	32
T8 1x4 2-Lamp Vaportight Fixture; Very Difficult Access	Access	2
T8 1x4 2-Lamp Wrap Fixture	Retrofit with (2) 12.5 Watt LED T8 4' Lamps; Direct Wire to Socket	283

©2013 Energy Systems Group, LLC

EXISTING FIXTURE DESCRIPTION	PROPOSED RETROFIT DESCRIPTION	QUANTITY
T8 1x4 2-Lamp Wrap Fixture; Damaged	Socket	5
T8 1x4 2-Lamp Wrap Fixture; Difficult Access	Retrofit with (2) 12.5 Watt LED T8 4' Lamps; Direct Wire to Socket; Difficult Access	5
T8 1x4 3-Lamp Industrial Strip Fixture	Retrofit with (3) 12.5 Watt LED T8 4' Lamps; Direct Wire to Socket	17
T8 1x4 3-Lamp Vaportight Fixture	Retrofit with (3) 12.5 Watt LED T8 4' Lamps; Direct Wire to Socket	3
T8 1x4 3-Lamp Wrap Fixture	Retrofit with (3) 12.5 Watt LED T8 4' Lamps; Direct Wire to Socket	8
T8 1x4 3-Lamp Wrap Fixture; Difficult Access	Retrofit with (3) 12.5 Watt LED T8 4' Lamps; Direct Wire to Socket; Difficult Access	4
T8 1x4 4-Lamp Direct/Indirect Fixture with 28 Watt Lamps	Retrofit with (4) 12.5 Watt LED T8 4' Lamps; Direct Wire to Socket	16
T8 1x4 4-Lamp Direct/Indirect Linear Fixture	Retrofit with (4) 12.5 Watt LED T8 4' Lamps; Direct Wire to Socket	12
T8 1x4 4-Lamp Direct/Indirect Linear Fixture; Dimming	Retrofit with (4) 14 Watt LED T8 4' Lamps and (2) Dimming Driver	14
T8 1x4 4-Lamp Industrial Strip Fixture	Retrofit with (4) 12.5 Watt LED T8 4' Lamps; Direct Wire to Socket	1
T8 1x4 4-Lamp Industrial Strip Fixture; Turret	Socket	3
T8 1x4 4-Lamp Vanity Fixture	Retrofit with (4) 12.5 Watt LED T8 4' Lamps; Direct Wire to Socket	2
T8 1x4 4-Lamp Wrap Fitxture; Difficult Access	Retrofit with (4) 14 Watt LED T8 4' Lamps and (2) Dimming Driver	8
T8 1x4 4-Lamp Wrap Fixture	Retrofit with (4) 12.5 Watt LED T8 4' Lamps; Direct Wire to Socket	153
T8 1x8 1-Lamp Vanity Fixture	Socket	10
T8 1x8 2-Lamp Strip Fixture with 59 Watt Lamps	Socket	51
T8 1x8 4-Lamp Indsutrial Strip Fixture; Turret	Socket	6
T8 1x8 4-Lamp Industrial Strip Fixture	Retrofit with (4) 12.5 Watt LED T8 4' Lamps; Direct Wire to Socket	8
T8 1x8 4-Lamp Strip Fixture	Retrofit with (4) 12.5 Watt LED T8 4' Lamps; Direct Wire to Socket	18
T8 1x8 4-Lamp Vaportight Fixture	Retrofit with (4) 12.5 Watt LED T8 4' Lamps; Direct Wire to Socket	16
T8 1x8 6-Lamp Industrial Strip Fxiture	Retrofit with (6) 12.5 Watt LED T8 4' Lamps; Direct Wire to Socket	3
T8 1x8 6-Lamp Vaportight Fixture	Retrofit with (6) 12.5 Watt LED T8 4' Lamps; Direct Wire to Socket	11
T8 2x2 1-Lamp Vanity Fixture	Retrofit with (1) 10 Watt LED T8 2' Lamp; Direct Wire to Socket	69
T8 2x2 2-Lamp Industrial Strip Fixture	Retrofit with (2) 10 Watt LED T8 2' Lamps; Direct Wire to Socket	2
T8 2x2 2-Lamp Troffer Fixture	Retrofit with (2) 10 Watt LED T8 2' Lamps; Direct Wire to Socket	16
T8 2x2 2-Lamp U-Lamp Troffer Fixture with 1-5/8" Lamps	Direct Wire to Socket	16
T8 2x2 2-Lamp U-Lamp Troffer Fixture with 6" Lamps	Direct Wire to Socket	19
T8 2x2 2-Lamp Wrap Fixture	Retrofit with (2) 10 Watt LED T8 2' Lamps; Direct Wire to Socket	4
T8 2x2 3-Lamp Surface Mount Fixture	Retrofit with (3) 10 Watt LED T8 2' Lamps; Direct Wire to Socket	7
T8 2x2 3-Lamp Troffer Fixture	Retrofit with (3) 10 Watt LED T8 2' Lamps; Direct Wire to Socket	9
T8 2x3 1-Lamp Strip Fixture	Retrofit with (1) 12 Watt LED T8 3' Lamp; Direct Wire to Socket	2
T8 2x3 2-Lamp Industrial Strip Fixture	Retrofit with (2) 12 Watt LED T8 3' Lamps; Direct Wire to Socket	2
T8 2x3 2-Lamp Strip Fixture	Retrofit with (2) 12 Watt LED T8 3' Lamps; Direct Wire to Socket	2
T8 2x3 2-Lamp Troffer Fixture	Retrofit with (2) 12 Watt LED T8 3' Lamps; Direct Wire to Socket	6
T8 2x3 2-Lamp Vanity Fixture	Retrofit with (2) 12 Watt LED T8 3' Lamps; Direct Wire to Socket	4
T8 2x4 2-Lamp Surface Mount Fixture	Retrofit with (2) 12.5 Watt LED T8 4' Lamps; Direct Wire to Socket	41
T8 2x4 2-Lamp Troffer Fixture	Retrofit with (2) 12.5 Watt LED T8 4' Lamps; Direct Wire to Socket	54
T8 2x4 2-Lamp Volumetric Fixture; Dimming	Retrofit with (2) 14 Watt LED T8 4' Lamps and (1) Dimming Driver	12
T8 2x4 3-Lamp Surface Mount Fixture	Retrofit with (3) 12.5 Watt LED T8 4' Lamps; Direct Wire to Socket	6
T8 2x4 3-Lamp Troffer Fixture	Retrofit with (3) 12.5 Watt LED T8 4' Lamps; Direct Wire to Socket	5
T8 2x4 3-Lamp Troffer Fixture; Parabolic	Retrofit with (3) 12.5 Watt LED T8 4' Lamps; Direct Wire to Socket	64
T8 2x4 4-Lamp Surface Mount Fixture	Retrofit with (4) 12.5 Watt LED T8 4' Lamps; Direct Wire to Socket	18
T8 2x4 4-Lamp Surface Mount Fixture; Damaged	Socket	1
T8 2x4 4-Lamp Troffer Fixture	Retrofit with (4) 12.5 Watt LED T8 4' Lamps; Direct Wire to Socket	110
T8 2x4 4-Lamp Troffer Fixture; Damaged	to Socket	12
T8 2x4 6-Lamp High Bay Fixture	New 150 Watt LED High Bay Fixture	2
T8HO 1x4 2-Lamp Strip Fixture	New 40 Watt LED Canopy Fixture	5
TT5 2x2 2-Lamp FT40 Troffer Fixture with 40 Watt Biax Lamps	Retrofit with (2) 17 Watt LED FT40; Direct Wire to Socket	150
Grand Total		**11006**

©2013 Energy Systems Group, LLC

EXISTING FIXTURES												PROPOSED FIXTURE UPGRADE				
Park/Building Name	Building	Building #	Phase	Floor	Room Description	Qty	Description	Watts	kW	kWh	Qty	Description	Watts	kW	kWh
MORAINE PARK	BUILDING 1	12	INTERIOR		CARPENTER #12 SHOP	2	T12 1x4 4-Lamp Wrap Fixture; Damaged	144	0.288	749	2	New 1x8 2-Lamp Wrap Fixture with (4) 12.5 Watt LED T8 4' Lamps; Direct Wire to Socket	50	0.100	260
MORAINE PARK	BUILDING 1	12	INTERIOR		CARPENTER #12 SHOP	1	T12 1x8 2-Lamp Strip Fixture with 60 Watt Lamps	123	0.123	320	1	Retrofit with (4) 12.5 Watt LED T8 4' Lamps and (1) 1x8 4-Lamp Strip Kit; Direct Wire to Socket	50	0.050	130
MORAINE PARK	BUILDING 1	12	INTERIOR		CARPENTER #12 SHOP	1	75 Watt Incandescent A-Lamp Fixture	75	0.075	195	1	Re-Lamp with (1) 10 Watt LED A19	10	0.010	26
MORAINE PARK	BUILDING 1	12	INTERIOR		CARPENTER #12 SHOP	1	T12 1x8 2-Lamp Vaporlight Fixture with 60 Watt Lamps	123	0.123	320	1	New 1x8 2-Lamp Vaporlight Fixture with (4) 12.5 Watt LED T8 4' Lamps; Direct Wire to Socket	50	0.050	130
MORAINE PARK	BUILDING 1	12	INTERIOR		CARPENTER #12 SHOP	2	T12 1x4 4-Lamp Strip Fixture	144	0.288	749	2	Retrofit with (4) 12.5 Watt LED T8 4' Lamps; Direct Wire to Socket	50	0.100	260
MORAINE PARK	BUILDING 1	12	INTERIOR		CARPENTER #12 SHOP	1	90 Watt Incandescent PAR38 Fixture	90	0.090	394	1	Re-Lamp with (1) 17 Watt LED PAR38	17	0.017	74
MORAINE PARK	BUILDING 2	12	INTERIOR		CARPENTER SHOP GARAGE	2	300 Watt Incandescent A-Lamp Fixture	300	0.600	1,561	2	Re-Lamp with (1) 27 Watt LED Omni-Cob Lamp; Hardwire Ballast	27	0.054	140
MORAINE PARK	BUILDING 3	12	INTERIOR		GARAGE	2	300 Watt Incandescent A-Lamp Fixture	300	0.600	1,561	2	Re-Lamp with (1) 27 Watt LED Omni-Cob Lamp; Hardwire Ballast	27	0.054	140
MORAINE PARK	BUILDING 3	12	INTERIOR		GARAGE	3	100 Watt Incandescent A-Lamp Fixture	100	0.300	780	3	Re-Lamp with (1) 18 Watt LED A21	18	0.054	140
MORAINE PARK	BUILDING 4	12	INTERIOR		GARAGE	4	100 Watt Incandescent A-Lamp Fixture	100	0.400	1,040	4	Re-Lamp with (1) 18 Watt LED A21	18	0.072	187
MORAINE PARK	COMFORT STATION 114	114	INTERIOR		RESTROOMS	2	T8 1x4 2-Lamp Vaporlight Fixture; Very Difficult Access	62	0.124	568	2	Retrofit with (2) 12.5 Watt LED T8 4' Lamps; Direct Wire to Socket; Very Difficult Access	25	0.050	229
MORAINE PARK	COMFORT STATION 114	114	EXTERIOR		EXTERIOR	2	70 Watt High Pressure Sodium Wall Pack Fixture	90	0.180	518	2	New 24 Watt LED Wall Pack Fixture; Non-Dark Sky	25	0.050	144
MORAINE PARK	PADDLE BOAT BAY BUILDING 32	32	INTERIOR		GARAGE	2	75 Watt Incandescent A-Lamp Fixture	75	0.150	414	2	Re-Lamp with (1) 10 Watt LED A19	10	0.020	55
MORAINE PARK	PADDLE BOAT BAY BUILDING 32	32	INTERIOR		GARAGE	1	75 Watt Incandescent Jelly Jar Fixture; Damaged	75	0.075	207	1	New 18 Watt LED A21 Jelly Jar Fixture	15	0.015	41
MORAINE PARK	36 PV FIRST AID	36	INTERIOR		FIRST AID	1	Cannot Locate Building/Areas; Area(s) Not Included in Scope/Pricing	0	0.000	0	1	No Retrofit	0	0.000	0
MORAINE PARK	LIFT STATION 137	137	INTERIOR		LIFT STATION	4	23 Watt Compact Fluorescent Jelly Jar	23	0.092	254	4	Re-Lamp with (1) 10 Watt LED A19	10	0.040	110
MORAINE PARK	LIFT STATION 137	137	INTERIOR		LIFT STATION	2	T8 1x4 2-Lamp Wrap Fixture	62	0.124	342	2	Retrofit with (2) 12.5 Watt LED T8 4' Lamps; Direct Wire to Socket	25	0.050	138
MORAINE PARK	GENERATOR SHED 132	132	INTERIOR		GENERATOR SHED	2	100 Watt Incandescent A-Lamp Jelly Jar Fixture	100	0.200	520	2	Re-Lamp with (1) 18 Watt LED A21	18	0.036	94
MORAINE PARK	GENERATOR SHED 132	132	INTERIOR		GENERATOR SHED	1	23 Watt Compact Fluorescent Jelly Jar	23	0.023	60	1	Re-Lamp with (1) 10 Watt LED A19	10	0.010	26
MORAINE PARK	LIFT STATION 2 - 135	135	INTERIOR		PUMP ROOM	5	T8 1x4 2-Lamp Vaporlight Fixture	62	0.310	856	5	Retrofit with (2) 12.5 Watt LED T8 4' Lamps; Direct Wire to Socket	25	0.125	345
MORAINE PARK	PARK MANAGER RESIDENCE 15	15	INTERIOR	1	FRONT ROOM	1	60 Watt Incandescent 2-Lamp Fixture	120	0.120	444	1	Re-Lamp with (2) 10 Watt LED A19	20	0.020	74
MORAINE PARK	PARK MANAGER RESIDENCE 15	15	INTERIOR	1	KITCHEN	1	40 Watt Incandescent 3-Lamp Fixture	120	0.120	444	1	Re-Lamp with (3) 7 Watt LED A19	21	0.021	78
MORAINE PARK	PARK MANAGER RESIDENCE 15	15	INTERIOR	1	KITCHEN	6	13 Watt Compact Fluorescent Downlight	13	0.078	289	6	Re-Lamp with (1) 10 Watt LED BR30	10	0.060	222
MORAINE PARK	PARK MANAGER RESIDENCE 15	15	INTERIOR	1	KITCHEN	1	13 Watt Compact Fluorescent 2-Lamp Fixture	26	0.026	96	1	Re-Lamp with (2) 10 Watt LED A19	20	0.020	74
MORAINE PARK	PARK MANAGER RESIDENCE 15	15	INTERIOR	1	LAUNDRY	2	13 Watt Compact Fluorescent Fixture	13	0.026	96	2	Re-Lamp with (1) 10 Watt LED A19	10	0.020	74
MORAINE PARK	PARK MANAGER RESIDENCE 15	15	INTERIOR	1	LAUNDRY	1	13 Watt Compact Fluorescent 2-Lamp Fixture	26	0.026	96	1	Re-Lamp with (2) 10 Watt LED A19	20	0.020	74

©2013 Energy Systems Group, LLC

EXISTING FIXTURES												PROPOSED FIXTURE UPGRADE				
Park/Building Name	Building	Building #	Phase	Floor	Room Description	Qty	Description	Watts	kW	kWh	Qty	Description	Watts	kW	kWh
MORAINE PARK	PARK MANAGER RESIDENCE 15	15	INTERIOR	1	CLOSET	2	23 Watt Compact Fluorescent Downlight	23	0.046	170	2	Re-Lamp with (1) 10 Watt LED BR30	10	0.020	74
MORAINE PARK	PARK MANAGER RESIDENCE 15	15	INTERIOR	1	LIVING ROOM	1	23 Watt Compact Fluorescent Fixture	23	0.023	85	1	Re-Lamp with (1) 10 Watt LED A19	10	0.010	37
MORAINE PARK	PARK MANAGER RESIDENCE 15	15	INTERIOR	1	BEDROOM	1	13 Watt Compact Fluorescent 4-Lamp Fixture	52	0.052	193	1	Re-Lamp with (4) 10 Watt LED A19	40	0.040	148
MORAINE PARK	PARK MANAGER RESIDENCE 15	15	INTERIOR	1	BEDROOM CLOSET	1	13 Watt Compact Fluorescent Fixture	13	0.013	48	1	Re-Lamp with (1) 10 Watt LED A19	10	0.010	37
MORAINE PARK	PARK MANAGER RESIDENCE 15	15	INTERIOR	1	RESTROOM	1	25 Watt Incandescent 5-Lamp Fixture	125	0.125	463	1	Re-Lamp with (5) 7 Watt LED A19	35	0.035	130
MORAINE PARK	PARK MANAGER RESIDENCE 15	15	INTERIOR	1	RESTROOM	1	26 Watt Compact Fluorescent Fixture	26	0.026	96	1	Re-Lamp with (1) 10 Watt LED A19	10	0.010	37
MORAINE PARK	PARK MANAGER RESIDENCE 15	15	INTERIOR	1	RESTROOM	1	40 Watt Incandescent 4-Lamp Globe	160	0.160	593	1	Re-Lamp with (4) 8 Watt LED G25 Globe	32	0.032	119
MORAINE PARK	PARK MANAGER RESIDENCE 15	15	INTERIOR	1	BEDROOM	1	26 Watt Compact Fluorescent 3-Lamp Fixture	78	0.078	289	1	Re-Lamp with (3) 10 Watt LED A19	30	0.030	111
MORAINE PARK	PARK MANAGER RESIDENCE 15	15	INTERIOR	1	BEDROOM CLOSET	1	100 Watt Incandescent A-Lamp Fixture	100	0.100	370	1	Re-Lamp with (1) 18 Watt LED A21	18	0.018	67
MORAINE PARK	PARK MANAGER RESIDENCE 15	15	INTERIOR	1	BEDROOM	1	13 Watt Compact Fluorescent 4-Lamp Fixture	52	0.052	193	1	Re-Lamp with (4) 10 Watt LED A19	40	0.040	148
MORAINE PARK	PARK MANAGER RESIDENCE 15	15	INTERIOR	1	BEDROOM CLOSET	1	13 Watt Compact Fluorescent Fixture	13	0.013	48	1	Re-Lamp with (1) 10 Watt LED A19	10	0.010	37
MORAINE PARK	PARK MANAGER RESIDENCE 15	15	INTERIOR	1	HALLWAY	1	13 Watt Compact Fluorescent Fixture	13	0.013	48	1	Re-Lamp with (1) 10 Watt LED A19	10	0.010	37
MORAINE PARK	PARK MANAGER RESIDENCE 15	15	INTERIOR	2	BEDROOM	1	60 Watt Incandescent 3-Lamp Fixture	180	0.180	667	1	Re-Lamp with (3) 10 Watt LED A19	30	0.030	111
MORAINE PARK	PARK MANAGER RESIDENCE 15	15	INTERIOR	2	BEDROOM	2	Existing LED Fixture; No Retrofit	10	0.020	74	2	No Retrofit	10	0.020	74
MORAINE PARK	PARK MANAGER RESIDENCE 15	15	INTERIOR	2	BEDROOM	1	23 Watt Compact Fluorescent Fixture	23	0.023	85	1	Re-Lamp with (1) 10 Watt LED A19	10	0.010	37
MORAINE PARK	PARK MANAGER RESIDENCE 15	15	INTERIOR	2	CLOSET	1	100 Watt Incandescent A-Lamp Fixture	100	0.100	370	1	Re-Lamp with (1) 18 Watt LED A21	18	0.018	67
MORAINE PARK	PARK MANAGER RESIDENCE 15	15	INTERIOR	2	HALLWAY	2	75 Watt Incandescent A-Lamp Downlight Fixture	75	0.150	556	2	Re-Lamp with (1) 10 Watt LED BR30	10	0.020	74
MORAINE PARK	PARK MANAGER RESIDENCE 15	15	INTERIOR	2	HALLWAY CLOSET	2	60 Watt Incandescent A-Lamp Fixture	60	0.120	120	2	Re-Lamp with (1) 10 Watt LED A19	10	0.020	20
MORAINE PARK	PARK MANAGER RESIDENCE 15	15	INTERIOR	2	HALLWAY CLOSET	5	60 Watt Incandescent A-Lamp Fixture	60	0.300	300	5	Re-Lamp with (1) 10 Watt LED A19	10	0.050	50
MORAINE PARK	PARK MANAGER RESIDENCE 15	15	INTERIOR	2	HALLWAY CLOSET	3	18 Watt Compact Fluorescent Fixture	18	0.054	54	3	Re-Lamp with (1) 10 Watt LED A19	10	0.030	30
MORAINE PARK	PARK MANAGER RESIDENCE 15	15	EXTERIOR		EXTERIOR	1	90 Watt Incandescent PAR38 2-Lamp Fixture	180	0.180	788	1	Re-Lamp with (2) 17 Watt LED PAR38	34	0.034	149
MORAINE PARK	PARK MANAGER RESIDENCE 15	15	EXTERIOR		EXTERIOR	2	13 Watt Compact Fluorescent 2-Lamp Fixture	26	0.052	228	2	Re-Lamp with (2) 10 Watt LED A19	20	0.040	175
MORAINE PARK	COMFORT STATION 528 LAUNCH 141	141	INTERIOR		MECHANICAL	2	T12 1x4 2-Lamp Vaportight Fixture	72	0.144	397	2	Retrofit with (2) 12.5 Watt LED T8 4' Lamps; Direct Wire to Socket	25	0.050	138
MORAINE PARK	COMFORT STATION 528 LAUNCH 141	141	INTERIOR		MENS RESTROOM	3	T12 1x4 2-Lamp Vaportight Fixture	72	0.216	596	3	Retrofit with (2) 12.5 Watt LED T8 4' Lamps; Direct Wire to Socket	25	0.075	207
MORAINE PARK	COMFORT STATION 528 LAUNCH 141	141	INTERIOR		MENS RESTROOM	1	T12 2x2 2-Lamp Vanity Fixture	42	0.042	116	1	Retrofit with (2) 10 Watt LED T8 2' Lamps; Direct Wire to Socket	20	0.020	55
MORAINE PARK	COMFORT STATION 528 LAUNCH 141	141	INTERIOR		WOMENS RESTROOM	1	T12 2x2 2-Lamp Vanity Fixture	42	0.042	116	1	Retrofit with (2) 10 Watt LED T8 2' Lamps; Direct Wire to Socket	20	0.020	55

©2013 Energy Systems Group, LLC

EXISTING FIXTURES												PROPOSED FIXTURE UPGRADE				
Park/Building Name	Building	Building #	Phase	Floor	Room Description	Qty	Description	Watts	kW	kWh	Qty	Description	Watts	kW	kWh
MORAINE PARK	COMFORT STATION 528 LAUNCH 141	141	INTERIOR		WOMENS RESTROOM	2	T12 1x4 2-Lamp Vaporlight Fixture	72	0.144	397	2	Retrofit with (2) 12.5 Watt LED T8 4' Lamps; Direct Wire to Socket	25	0.050	138
MORAINE PARK	COMFORT STATION 528 LAUNCH 141	141	EXTERIOR		EXTERIOR	1	150 Watt High Pressure Sodium Flood Fixture	188	0.188	541	1	New 52 Watt LED Flood Fixture	54	0.054	156
MORAINE PARK	COMFORT STATION 528 LAUNCH 141	141	EXTERIOR		EXTERIOR	2	13 Watt Plug-In CFL 2-Lamp Downlight Fixture	26	0.052	150	2	Retrofit with 9 Watt LED 6" Downlight	9	0.018	52
MORAINE PARK	COMFORT STATION 528 LAUNCH 141	141	EXTERIOR		EXTERIOR	2	Existing LED Fixture; No Retrofit	20	0.040	115	2	No Retrofit	20	0.040	115
MORAINE PARK	REGIONAL 8 MAINTENANCE BUILDING	8	INTERIOR		OFFICE	3	Existing LED Fixture; No Retrofit	60	0.180	468	3	No Retrofit	60	0.180	468
MORAINE PARK	REGIONAL 8 MAINTENANCE BUILDING	8	INTERIOR		OFFICE	1	T12 1x4 4-Lamp Egg Crate Fixture	144	0.144	375	1	New 1x4 4-Lamp Wrap Fixture with (4) 12.5 Watt LED T8 4' Lamps; Direct Wire to Socket	50	0.050	130
MORAINE PARK	REGIONAL 8 MAINTENANCE BUILDING	8	INTERIOR		RESTROOM	1	100 Watt Incandescent A-Lamp Jelly Jar Fixture	100	0.100	260	1	Re-Lamp with (1) 18 Watt LED A21	18	0.018	47
MORAINE PARK	REGIONAL 8 MAINTENANCE BUILDING	8	INTERIOR		CLOSET	1	150 Watt Incandescent A-Lamp Fixture	150	0.150	150	1	Re-Lamp with (1) 18 Watt LED A21	18	0.018	18
MORAINE PARK	REGIONAL 8 MAINTENANCE BUILDING	8	INTERIOR		SHOP BAY	3	T12 1x4 4-Lamp Wrap Fixture; Damaged	144	0.432	1,124	3	New 1x8 2-Lamp Wrap Fixture with (4) 12.5 Watt LED T8 4' Lamps; Direct Wire to Socket	50	0.150	390
MORAINE PARK	REGIONAL 8 MAINTENANCE BUILDING	8	INTERIOR		SHOP BAY	6	100 Watt Incandescent A-Lamp Fixture	100	0.600	1,561	6	Re-Lamp with (1) 18 Watt LED A21	18	0.108	281
MORAINE PARK	REGIONAL 8 MAINTENANCE BUILDING	8	INTERIOR		STORAGE	1	100 Watt Incandescent A-Lamp Fixture	100	0.100	100	1	Re-Lamp with (1) 18 Watt LED A21	18	0.018	18
MORAINE PARK	REGIONAL 8 MAINTENANCE BUILDING	8	INTERIOR		CHEMICAL ROOM	1	150 Watt Incandescent Jelly Jar	150	0.150	150	1	Re-Lamp with (1) 18 Watt LED A21	18	0.018	18
MORAINE PARK	REGIONAL 8 MAINTENANCE BUILDING	8	INTERIOR		TOOL SHED	1	150 Watt Incandescent Jelly Jar	150	0.150	390	1	Re-Lamp with (1) 18 Watt LED A21	18	0.018	47
MORAINE PARK	REGIONAL 8 MAINTENANCE BUILDING	8	INTERIOR		TOOL ROOM	2	T12 1x8 2-Lamp Strip Fixture with 60 Watt Lamps	123	0.246	640	2	Retrofit with (4) 12.5 Watt LED T8 4' Lamps and (1) 1x8 4-Lamp Strip Kit; Direct Wire to Socket	50	0.100	260
MORAINE PARK	REGIONAL 8 MAINTENANCE BUILDING	8	INTERIOR		TOOL ROOM	1	T12 1x4 4-Lamp Wrap Fixture; Damaged	144	0.144	375	1	New 1x8 2-Lamp Wrap Fixture with (4) 12.5 Watt LED T8 4' Lamps; Direct Wire to Socket	50	0.050	130
MORAINE PARK	REGIONAL 8 MAINTENANCE BUILDING	8	INTERIOR		WORK BAY	3	T12 1x4 2-Lamp Strip Fixture	72	0.216	562	3	Retrofit with (2) 12.5 Watt LED T8 4' Lamps; Direct Wire to Socket	25	0.075	195
MORAINE PARK	REGIONAL 8 MAINTENANCE BUILDING	8	INTERIOR		WORK BAY	7	150 Watt Incandescent A-Lamp Fixture	150	1.050	2,731	7	Re-Lamp with (1) 18 Watt LED A21	18	0.126	328
MORAINE PARK	REGIONAL 8 MAINTENANCE BUILDING	8	INTERIOR		WORK BAY	2	23 Watt Compact Fluorescent Fixture	23	0.046	120	2	Re-Lamp with (1) 10 Watt LED A19	10	0.020	52
MORAINE PARK	REGIONAL 8 MAINTENANCE BUILDING	8	INTERIOR		MEZZANINE	3	150 Watt Incandescent A-Lamp Fixture	150	0.450	1,170	3	Re-Lamp with (1) 18 Watt LED A21	18	0.054	140
MORAINE PARK	REGIONAL 8 MAINTENANCE BUILDING	8	EXTERIOR		EXTERIOR	3	90 Watt Incandescent PAR38 2-Lamp Fixture	180	0.540	2,365	3	Re-Lamp with (2) 17 Watt LED PAR38	34	0.102	447
MORAINE PARK	REGIONAL 8 MAINTENANCE BUILDING	8	EXTERIOR		EXTERIOR	1	90 Watt Incandescent PAR38 Fixture	90	0.090	394	1	Re-Lamp with (1) 17 Watt LED PAR38	17	0.017	74
MORAINE PARK	REGIONAL 8 MAINTENANCE BUILDING	8	EXTERIOR		EXTERIOR	1	100 Watt Incandescent A-Lamp Jelly Jar Fixture	100	0.100	438	1	Re-Lamp with (1) 18 Watt LED A21	18	0.018	79
MORAINE PARK	OLD 422 COMFORT STATION 85	85	INTERIOR		MENS RESTROOM	1	23 Watt Compact Fluorescent Fixture	23	0.023	105	1	Re-Lamp with (1) 10 Watt LED A19	10	0.010	46
MORAINE PARK	OLD 422 COMFORT STATION 85	85	INTERIOR		WOMENS RESTROOM	1	23 Watt Compact Fluorescent Fixture	23	0.023	105	1	Re-Lamp with (1) 10 Watt LED A19	10	0.010	46
MORAINE PARK	OLD 422 COMFORT STATION 85	85	INTERIOR		MECHANICAL	1	23 Watt Compact Fluorescent Fixture	23	0.023	23	1	Re-Lamp with (1) 10 Watt LED A19	10	0.010	10
MORAINE PARK	OLD 422 COMFORT STATION 85	85	EXTERIOR		EXTERIOR	2	23 Watt Compact Fluorescent Wall Pack Fixture	23	0.046	132	2	New 24 Watt LED Wall Pack Fixture; Non-Dark Sky	25	0.050	144

©2013 Energy Systems Group, LLC

EXISTING FIXTURES												PROPOSED FIXTURE UPGRADE				
Park/Building Name	Building	Building #	Phase	Floor	Room Description	Qty	Description	Watts	kW	kWh	Qty	Description	Watts	kW	kWh
MORAINE PARK	MANAGER RESIDENCE 19	19	INTERIOR	1	BEDROOM	1	13 Watt Compact Fluorescent 4-Lamp Fixture	52	0.052	193	1	Re-Lamp with (4) 10 Watt LED A19	40	0.040	148
MORAINE PARK	MANAGER RESIDENCE 19	19	INTERIOR	1	BEDROOM CLOSET	1	75 Watt Incandescent A-Lamp Fixture	75	0.075	75	1	Re-Lamp with (1) 10 Watt LED A19	10	0.010	10
MORAINE PARK	MANAGER RESIDENCE 19	19	INTERIOR	1	RESTROOM	1	13 Watt Compact Fluorescent 3-Lamp Fixture	39	0.039	144	1	Re-Lamp with (3) 10 Watt LED A19	30	0.030	111
MORAINE PARK	MANAGER RESIDENCE 19	19	INTERIOR	1	HALLWAY	1	40 Watt Incandescent 4-Lamp Fixture	160	0.160	593	1	Re-Lamp with (4) 7 Watt LED A19	28	0.028	104
MORAINE PARK	MANAGER RESIDENCE 19	19	INTERIOR	1	HALLWAY CLOSET	1	100 Watt Incandescent A-Lamp Fixture	100	0.100	100	1	Re-Lamp with (1) 18 Watt LED A21	18	0.018	18
MORAINE PARK	MANAGER RESIDENCE 19	19	INTERIOR	1	KITCHEN	2	13 Watt Compact Fluorescent 4-Lamp Fixture	52	0.104	385	2	Re-Lamp with (4) 10 Watt LED A19	40	0.080	296
MORAINE PARK	MANAGER RESIDENCE 19	19	INTERIOR	1	KITCHEN	2	13 Watt Compact Fluorescent Downlight	13	0.026	96	2	Re-Lamp with (1) 10 Watt LED BR30	10	0.020	74
MORAINE PARK	MANAGER RESIDENCE 19	19	INTERIOR	1	LIVING ROOM	1	40 Watt Incandescent 2-Lamp Fixture	80	0.080	296	1	Re-Lamp with (2) 7 Watt LED A19	14	0.014	52
MORAINE PARK	MANAGER RESIDENCE 19	19	INTERIOR	1	LIVING ROOM	1	60 Watt Incandescent 3-Lamp Fixture	180	0.180	667	1	Re-Lamp with (3) 10 Watt LED A19	30	0.030	111
MORAINE PARK	MANAGER RESIDENCE 19	19	INTERIOR	1	LIVING ROOM	1	13 Watt Compact Fluorescent Fixture	13	0.013	48	1	Re-Lamp with (1) 10 Watt LED A19	10	0.010	37
MORAINE PARK	MANAGER RESIDENCE 19	19	INTERIOR	2	BEDROOM	8	65 Watt Incandescent R30 Downlight Fixture	65	0.520	1,926	8	Re-Lamp with (1) 10 Watt LED BR30	10	0.080	296
MORAINE PARK	MANAGER RESIDENCE 19	19	INTERIOR	2	HALLWAY	2	13 Watt Compact Fluorescent Fixture	13	0.026	96	2	Re-Lamp with (1) 10 Watt LED A19	10	0.020	74
MORAINE PARK	MANAGER RESIDENCE 19	19	INTERIOR	2	HALLWAY CLOSET	1	23 Watt Compact Fluorescent Fixture	23	0.023	23	1	Re-Lamp with (1) 10 Watt LED A19	10	0.010	10
MORAINE PARK	MANAGER RESIDENCE 19	19	INTERIOR	2	BEDROOM	1	13 Watt Compact Fluorescent 4-Lamp Fixture	52	0.052	193	1	Re-Lamp with (4) 10 Watt LED A19	40	0.040	148
MORAINE PARK	MANAGER RESIDENCE 19	19	INTERIOR	2	BEDROOM CLOSET	1	13 Watt Compact Fluorescent Fixture	13	0.013	13	1	Re-Lamp with (1) 10 Watt LED A19	10	0.010	10
MORAINE PARK	MANAGER RESIDENCE 19	19	INTERIOR	2	RESTROOM	2	26 Watt Compact Fluorescent 3-Lamp Fixture	78	0.156	578	2	Re-Lamp with (3) 10 Watt LED A19	30	0.060	222
MORAINE PARK	MANAGER RESIDENCE 19	19	INTERIOR	2	RESTROOM	1	13 Watt Compact Fluorescent Fixture	13	0.013	48	1	Re-Lamp with (1) 10 Watt LED A19	10	0.010	37
MORAINE PARK	MANAGER RESIDENCE 19	19	INTERIOR	2	RESTROOM	1	60 Watt Incandescent 4" Downlight Fixture	60	0.060	222	1	Re-Lamp with (1) 10 Watt LED BR30	10	0.010	37
MORAINE PARK	MANAGER RESIDENCE 19	19	INTERIOR	2	BEDROOM	1	13 Watt Compact Fluorescent 3-Lamp Fixture	39	0.039	144	1	Re-Lamp with (3) 10 Watt LED A19	30	0.030	111
MORAINE PARK	MANAGER RESIDENCE 19	19	INTERIOR	2	BEDROOM	1	60 Watt Incandescent A-Lamp Fixture	60	0.060	222	1	Re-Lamp with (1) 10 Watt LED A19	10	0.010	37
MORAINE PARK	MANAGER RESIDENCE 19	19	INTERIOR	2	ATTIC	2	75 Watt Incandescent A-Lamp Fixture	75	0.150	150	2	Re-Lamp with (1) 10 Watt LED A19	10	0.020	20
MORAINE PARK	MANAGER RESIDENCE 19	19	INTERIOR	2	BASEMENT	4	T12 1x4 2-Lamp Industrial Strip Fixture	72	0.288	1,067	4	Retrofit with (2) 12.5 Watt LED T8 4' Lamps; Direct Wire to Socket	25	0.100	370
MORAINE PARK	MANAGER RESIDENCE 19	19	INTERIOR	2	GARAGE	4	T12 1x4 2-Lamp Industrial Strip Fixture	72	0.288	288	4	Retrofit with (2) 12.5 Watt LED T8 4' Lamps; Direct Wire to Socket	25	0.100	100
MORAINE PARK	MANAGER RESIDENCE 19	19	INTERIOR	2	LAUNDRY	2	T12 2x3 2-Lamp Strip Fixture	73	0.146	541	2	Retrofit with (2) 12 Watt LED T8 3' Lamps; Direct Wire to Socket	24	0.048	178
MORAINE PARK	MANAGER RESIDENCE 19	19	INTERIOR	2	LAUNDRY	1	T12 2x2 2-Lamp Strip Fixture	42	0.042	156	1	Retrofit with (2) 10 Watt LED T8 2' Lamps; Direct Wire to Socket	20	0.020	74
MORAINE PARK	MANAGER RESIDENCE 19	19	INTERIOR	2	PLAY ROOM	1	13 Watt Compact Fluorescent Fixture	13	0.013	48	1	Re-Lamp with (1) 10 Watt LED A19	10	0.010	37

©2013 Energy Systems Group, LLC

EXISTING FIXTURES											PROPOSED FIXTURE UPGRADE				
Park/Building Name	Building	Building #	Phase	Floor	Room Description	Qty	Description	Watts	kW	kWh	Qty	Description	Watts	kW	kWh
MORAINE PARK	MANAGER RESIDENCE 19	19	EXTERIOR		EXTERIOR	4	13 Watt Compact Fluorescent Fixture	13	0.052	228	4	Re-Lamp with (1) 10 Watt LED A19	10	0.040	175
MORAINE PARK	MANAGER RESIDENCE 19	19	EXTERIOR		EXTERIOR	4	90 Watt Incandescent PAR38 Lamp Fixture	180	0.720	3,154	4	Re-Lamp with (2) 17 Watt LED PAR38	34	0.136	596
MORAINE PARK	150 PARK RESIDENCE 6	6	INTERIOR		KITCHEN	1	13 Watt Compact Fluorescent 2-Lamp Fixture	26	0.026	96	1	Re-Lamp with (2) 10 Watt LED A19	20	0.020	74
MORAINE PARK	150 PARK RESIDENCE 6	6	INTERIOR		DINING	1	13 Watt Compact Fluorescent 2-Lamp Fixture	26	0.026	96	1	Re-Lamp with (2) 10 Watt LED A19	20	0.020	74
MORAINE PARK	150 PARK RESIDENCE 6	6	INTERIOR		LIVING ROOM	1	13 Watt Compact Fluorescent 2-Lamp Fixture	26	0.026	96	1	Re-Lamp with (2) 10 Watt LED A19	20	0.020	74
MORAINE PARK	150 PARK RESIDENCE 6	6	INTERIOR		HALLWAY	2	13 Watt Compact Fluorescent 3-Lamp Fixture	39	0.078	289	2	Re-Lamp with (3) 10 Watt LED A19	30	0.060	222
MORAINE PARK	150 PARK RESIDENCE 6	6	INTERIOR		HALLWAY CLOSET	1	75 Watt Incandescent A-Lamp Fixture	75	0.075	75	1	Re-Lamp with (1) 10 Watt LED A19	10	0.010	10
MORAINE PARK	150 PARK RESIDENCE 6	6	INTERIOR		RESTROOM	1	13 Watt Compact Fluorescent 5-Lamp Fixture	65	0.065	241	1	Re-Lamp with (5) 10 Watt LED A19	50	0.050	185
MORAINE PARK	150 PARK RESIDENCE 6	6	INTERIOR		RESTROOM	1	13 Watt Compact Fluorescent Fixture	13	0.013	48	1	Re-Lamp with (1) 10 Watt LED A19	10	0.010	37
MORAINE PARK	150 PARK RESIDENCE 6	6	INTERIOR		BEDROOM	1	13 Watt Compact Fluorescent 2-Lamp Fixture	26	0.026	96	1	Re-Lamp with (2) 10 Watt LED A19	20	0.020	74
MORAINE PARK	150 PARK RESIDENCE 6	6	INTERIOR		BEDROOM	1	13 Watt Compact Fluorescent 3-Lamp Fixture	39	0.039	144	1	Re-Lamp with (3) 10 Watt LED A19	30	0.030	111
MORAINE PARK	150 PARK RESIDENCE 6	6	INTERIOR		BEDROOM	1	13 Watt Compact Fluorescent 2-Lamp Fixture	26	0.026	96	1	Re-Lamp with (2) 10 Watt LED A19	20	0.020	74
MORAINE PARK	150 PARK RESIDENCE 6	6	INTERIOR		CLOSET	1	75 Watt Incandescent A-Lamp Fixture	75	0.075	75	1	Re-Lamp with (1) 10 Watt LED A19	10	0.010	10
MORAINE PARK	150 PARK RESIDENCE 6	6	INTERIOR		CLOSET	1	75 Watt Incandescent A-Lamp Fixture	75	0.075	75	1	Re-Lamp with (1) 10 Watt LED A19	10	0.010	10
MORAINE PARK	150 PARK RESIDENCE 6	6	INTERIOR		CLOSET	5	13 Watt Compact Fluorescent Fixture	13	0.065	65	5	Re-Lamp with (1) 10 Watt LED A19	10	0.050	50
MORAINE PARK	150 PARK RESIDENCE 6	6	INTERIOR		RESTROOM	1	13 Watt Compact Fluorescent Fixture	13	0.013	48	1	Re-Lamp with (1) 10 Watt LED A19	10	0.010	37
MORAINE PARK	150 PARK RESIDENCE 6	6	INTERIOR		RESTROOM	6	Existing LED Fixture; No Retrofit	10	0.060	222	6	No Retrofit	10	0.060	222
MORAINE PARK	150 PARK RESIDENCE 6	6	INTERIOR		STAIRS	1	60 Watt Incandescent A-Lamp; Difficult Access	60	0.060	222	1	Relamp with (1) 10 Watt LED A19; Difficult Access	10	0.010	37
MORAINE PARK	150 PARK RESIDENCE 6	6	EXTERIOR		EXTERIOR	3	13 Watt Compact Fluorescent Downlight	13	0.039	171	3	Retrofit with 9 Watt LED 6" Downlight	9	0.027	118
MORAINE PARK	150 PARK RESIDENCE 6	6	INTERIOR		GARAGE	2	75 Watt Incandescent A-Lamp Fixture	75	0.150	150	2	Re-Lamp with (1) 10 Watt LED A19	10	0.020	20
MORAINE PARK	150 PARK RESIDENCE 6	6	INTERIOR		GARAGE	4	60 Watt Incandescent A-Lamp Fixture	60	0.240	240	4	Re-Lamp with (1) 10 Watt LED A19	10	0.040	40
MORAINE PARK	150 PARK RESIDENCE 6	6	INTERIOR		GARAGE	1	60 Watt Incandescent A-Lamp Jelly Jar Fixture	60	0.060	60	1	Re-Lamp with (1) 10 Watt LED A19	10	0.010	10
MORAINE PARK	150 PARK RESIDENCE 6	6	EXTERIOR		GARAGE	1	90 Watt Incandescent PAR38 Fixture	90	0.090	394	1	Re-Lamp with (1) 17 Watt LED PAR38	17	0.017	74
MORAINE PARK	GARAGE 16 RESIDENCE	16	INTERIOR		GARAGE	6	T12 1x8 2-Lamp Strip Fixture with 60 Watt Lamps	123	0.738	738	6	Retrofit with (4) 12.5 Watt LED T8 4' Lamps and (1) 1x8 4-Lamp Strip Kit; Direct Wire to Socket	50	0.300	300
MORAINE PARK	GARAGE 16 RESIDENCE	16	INTERIOR		GARAGE	4	T12 1x8 2-Lamp Vaporlight Fixture with 60 Watt Lamps	123	0.492	492	4	New 1x8 2-Lamp Vaporlight Fixture with (4) 12.5 Watt LED T8 4' Lamps; Direct Wire to Socket	50	0.200	200
MORAINE PARK	GARAGE 16 RESIDENCE	16	EXTERIOR		GARAGE	1	175 Watt Mercury Vapor Dusk to Dawn Fixture	210	0.210	920	1	New 26 Watt LED Dusk to Dawn Barnyard Fixture	26	0.026	114

©2013 Energy Systems Group, LLC

EXISTING FIXTURES												PROPOSED FIXTURE UPGRADE				
Park/Building Name	Building	Building #	Phase	Floor	Room Description	Qty	Description	Watts	kW	kWh	Qty	Description	Watts	kW	kWh
MORAINE PARK	CABN 9 - 102	102	INTERIOR		LIVING ROOM	1	18 Watt Compact Fluorescent Fixture	18	0.018	67	1	Re-Lamp with (1) 10 Watt LED A19	10	0.010	37
MORAINE PARK	CABN 9 - 102	102	INTERIOR		SINK	1	1-Lamp F15; No Retrofit	15	0.015	56	1	No Retrofit	15	0.015	56
MORAINE PARK	CABN 9 - 102	102	INTERIOR		DINING	1	26 Watt Compact Fluorescent 5-Lamp Fixture	130	0.130	482	1	Re-Lamp with (5) 10 Watt LED A19	50	0.050	185
MORAINE PARK	CABN 9 - 102	102	INTERIOR		HALLWAY	1	26 Watt Compact Fluorescent 2-Lamp Fixture	52	0.052	193	1	Re-Lamp with (2) 10 Watt LED A19	20	0.020	74
MORAINE PARK	CABN 9 - 102	102	INTERIOR		BEDROOM	1	26 Watt Compact Fluorescent 2-Lamp Fixture	52	0.052	193	1	Re-Lamp with (2) 10 Watt LED A19	20	0.020	74
MORAINE PARK	CABN 9 - 102	102	INTERIOR		BEDROOM	1	26 Watt Compact Fluorescent 2-Lamp Fixture	52	0.052	193	1	Re-Lamp with (2) 10 Watt LED A19	20	0.020	74
MORAINE PARK	CABN 9 - 102	102	INTERIOR		RESTROOM	1	26 Watt Compact Fluorescent 3-Lamp Fixture	78	0.078	289	1	Re-Lamp with (3) 10 Watt LED A19	30	0.030	111
MORAINE PARK	CABN 9 - 102	102	INTERIOR		RESTROOM	1	18 Watt Compact Fluorescent Fixture	18	0.018	67	1	Re-Lamp with (1) 10 Watt LED A19	10	0.010	37
MORAINE PARK	CABN 9 - 102	102	EXTERIOR		PORCH	1	26 Watt Compact Fluorescent Canopy Fixture	26	0.026	114	1	New 10 Watt LED Canopy Fixture	12	0.012	53
MORAINE PARK	CABN 9 - 102	102	INTERIOR		TABLE LAMPS	4	13 Watt Compact Fluorescent Fixture	13	0.052	193	4	Re-Lamp with (1) 10 Watt LED A19	10	0.040	148
MORAINE PARK	CABN 10 - 103	103	INTERIOR		LIVING ROOM	1	18 Watt Compact Fluorescent Fixture	18	0.018	67	1	Re-Lamp with (1) 10 Watt LED A19	10	0.010	37
MORAINE PARK	CABN 10 - 103	103	INTERIOR		SINK	1	1-Lamp F15; No Retrofit	15	0.015	56	1	No Retrofit	15	0.015	56
MORAINE PARK	CABN 10 - 103	103	INTERIOR		DINING	1	26 Watt Compact Fluorescent 5-Lamp Fixture	130	0.130	482	1	Re-Lamp with (5) 10 Watt LED A19	50	0.050	185
MORAINE PARK	CABN 10 - 103	103	INTERIOR		HALLWAY	1	26 Watt Compact Fluorescent 2-Lamp Fixture	52	0.052	193	1	Re-Lamp with (2) 10 Watt LED A19	20	0.020	74
MORAINE PARK	CABN 10 - 103	103	INTERIOR		BEDROOM	1	26 Watt Compact Fluorescent 2-Lamp Fixture	52	0.052	193	1	Re-Lamp with (2) 10 Watt LED A19	20	0.020	74
MORAINE PARK	CABN 10 - 103	103	INTERIOR		BEDROOM	1	26 Watt Compact Fluorescent 2-Lamp Fixture	52	0.052	193	1	Re-Lamp with (2) 10 Watt LED A19	20	0.020	74
MORAINE PARK	CABN 10 - 103	103	INTERIOR		BEDROOM	1	26 Watt Compact Fluorescent 2-Lamp Fixture	52	0.052	193	1	Re-Lamp with (2) 10 Watt LED A19	20	0.020	74
MORAINE PARK	CABN 10 - 103	103	INTERIOR		RESTROOM	1	26 Watt Compact Fluorescent 3-Lamp Fixture	78	0.078	289	1	Re-Lamp with (3) 10 Watt LED A19	30	0.030	111
MORAINE PARK	CABN 10 - 103	103	INTERIOR		RESTROOM	1	18 Watt Compact Fluorescent Fixture	18	0.018	79	1	Re-Lamp with (1) 10 Watt LED A19	10	0.010	44
MORAINE PARK	CABN 10 - 103	103	EXTERIOR		PORCH	1	26 Watt Compact Fluorescent Canopy Fixture	26	0.026	96	1	Re-Lamp with (1) 10 Watt LED A19	10	0.010	37
MORAINE PARK	CABN 10 - 103	103	INTERIOR		TABLE LAMPS	4	13 Watt Compact Fluorescent Fixture	13	0.052	193	4	Re-Lamp with (1) 10 Watt LED A19	10	0.040	148
MORAINE PARK	CABN 8 - 101	101	INTERIOR		LIVING ROOM	1	18 Watt Compact Fluorescent Fixture	18	0.018	67	1	Re-Lamp with (1) 10 Watt LED A19	10	0.010	37
MORAINE PARK	CABN 8 - 101	101	INTERIOR		SINK	1	1-Lamp F15; No Retrofit	15	0.015	56	1	No Retrofit	15	0.015	56
MORAINE PARK	CABN 8 - 101	101	INTERIOR		DINING	1	26 Watt Compact Fluorescent 5-Lamp Fixture	130	0.130	482	1	Re-Lamp with (5) 10 Watt LED A19	50	0.050	185
MORAINE PARK	CABN 8 - 101	101	INTERIOR		HALLWAY	1	26 Watt Compact Fluorescent 2-Lamp Fixture	52	0.052	193	1	Re-Lamp with (2) 10 Watt LED A19	20	0.020	74
MORAINE PARK	CABN 8 - 101	101	INTERIOR		BEDROOM	1	26 Watt Compact Fluorescent 2-Lamp Fixture	52	0.052	193	1	Re-Lamp with (2) 10 Watt LED A19	20	0.020	74
MORAINE PARK	CABN 8 - 101	101	INTERIOR		BEDROOM	1	26 Watt Compact Fluorescent 2-Lamp Fixture	52	0.052	193	1	Re-Lamp with (2) 10 Watt LED A19	20	0.020	74

©2013 Energy Systems Group, LLC



EXISTING FIXTURES											PROPOSED FIXTURE UPGRADE				
Park/Building Name	Building	Building #	Phase	Floor	Room Description	Qty	Description	Watts	kW	kWh	Qty	Description	Watts	kW	kWh
MORAINE PARK	CABIN 8 - 101	101	INTERIOR		RESTROOM	1	26 Watt Compact Fluorescent 3-Lamp Fixture	78	0.078	289	1	Re-Lamp with (3) 10 Watt LED A19	30	0.030	111
MORAINE PARK	CABIN 8 - 101	101	INTERIOR		RESTROOM	1	18 Watt Compact Fluorescent Fixture	18	0.018	67	1	Re-Lamp with (1) 10 Watt LED A19	10	0.010	37
MORAINE PARK	CABIN 8 - 101	101	EXTERIOR		PORCH	1	26 Watt Compact Fluorescent Canopy Fixture	26	0.026	114	1	New 10 Watt LED Canopy Fixture	12	0.012	53
MORAINE PARK	CABIN 8 - 101	101	INTERIOR		TABLE LAMPS	4	13 Watt Compact Fluorescent Fixture	13	0.052	193	4	Re-Lamp with (1) 10 Watt LED A19	10	0.040	148
MORAINE PARK	CABIN 6 - 99	99	INTERIOR		LIVING ROOM	1	18 Watt Compact Fluorescent Fixture	18	0.018	67	1	Re-Lamp with (1) 10 Watt LED A19	10	0.010	37
MORAINE PARK	CABIN 6 - 99	99	INTERIOR		SINK	1	1-Lamp F15; No Retrofit	15	0.015	56	1	No Retrofit	15	0.015	56
MORAINE PARK	CABIN 6 - 99	99	INTERIOR		DINING	1	26 Watt Compact Fluorescent 5-Lamp Fixture	130	0.130	482	1	Re-Lamp with (5) 10 Watt LED A19	50	0.050	185
MORAINE PARK	CABIN 6 - 99	99	INTERIOR		HALLWAY	1	26 Watt Compact Fluorescent 2-Lamp Fixture	52	0.052	193	1	Re-Lamp with (2) 10 Watt LED A19	20	0.020	74
MORAINE PARK	CABIN 6 - 99	99	INTERIOR		BEDROOM	1	26 Watt Compact Fluorescent 2-Lamp Fixture	52	0.052	193	1	Re-Lamp with (2) 10 Watt LED A19	20	0.020	74
MORAINE PARK	CABIN 6 - 99	99	INTERIOR		BEDROOM	1	26 Watt Compact Fluorescent 2-Lamp Fixture	52	0.052	193	1	Re-Lamp with (2) 10 Watt LED A19	20	0.020	74
MORAINE PARK	CABIN 6 - 99	99	INTERIOR		RESTROOM	1	26 Watt Compact Fluorescent 3-Lamp Fixture	78	0.078	289	1	Re-Lamp with (3) 10 Watt LED A19	30	0.030	111
MORAINE PARK	CABIN 6 - 99	99	INTERIOR		RESTROOM	1	18 Watt Compact Fluorescent Fixture	18	0.018	67	1	Re-Lamp with (1) 10 Watt LED A19	10	0.010	37
MORAINE PARK	CABIN 6 - 99	99	EXTERIOR		PORCH	1	26 Watt Compact Fluorescent Canopy Fixture	26	0.026	114	1	New 10 Watt LED Canopy Fixture	12	0.012	53
MORAINE PARK	CABIN 6 - 99	99	INTERIOR		TABLE LAMPS	4	13 Watt Compact Fluorescent Fixture	13	0.052	193	4	Re-Lamp with (1) 10 Watt LED A19	10	0.040	148
MORAINE PARK	CABIN 1 - 94	94	INTERIOR		LIVING ROOM	1	18 Watt Compact Fluorescent Fixture	18	0.018	67	1	Re-Lamp with (1) 10 Watt LED A19	10	0.010	37
MORAINE PARK	CABIN 1 - 94	94	INTERIOR		SINK	1	1-Lamp F15; No Retrofit	15	0.015	56	1	No Retrofit	15	0.015	56
MORAINE PARK	CABIN 1 - 94	94	INTERIOR		DINING	1	26 Watt Compact Fluorescent 5-Lamp Fixture	130	0.130	482	1	Re-Lamp with (5) 10 Watt LED A19	50	0.050	185
MORAINE PARK	CABIN 1 - 94	94	INTERIOR		HALLWAY	1	26 Watt Compact Fluorescent 2-Lamp Fixture	52	0.052	193	1	Re-Lamp with (2) 10 Watt LED A19	20	0.020	74
MORAINE PARK	CABIN 1 - 94	94	INTERIOR		BEDROOM	1	26 Watt Compact Fluorescent 2-Lamp Fixture	52	0.052	193	1	Re-Lamp with (2) 10 Watt LED A19	20	0.020	74
MORAINE PARK	CABIN 1 - 94	94	INTERIOR		BEDROOM	1	26 Watt Compact Fluorescent 2-Lamp Fixture	52	0.052	193	1	Re-Lamp with (2) 10 Watt LED A19	20	0.020	74
MORAINE PARK	CABIN 1 - 94	94	INTERIOR		RESTROOM	1	26 Watt Compact Fluorescent 3-Lamp Fixture	78	0.078	289	1	Re-Lamp with (3) 10 Watt LED A19	30	0.030	111
MORAINE PARK	CABIN 1 - 94	94	INTERIOR		RESTROOM	1	18 Watt Compact Fluorescent Fixture	18	0.018	67	1	Re-Lamp with (1) 10 Watt LED A19	10	0.010	37
MORAINE PARK	CABIN 1 - 94	94	EXTERIOR		PORCH	1	26 Watt Compact Fluorescent Canopy Fixture	26	0.026	114	1	New 10 Watt LED Canopy Fixture	12	0.012	53
MORAINE PARK	CABIN 1 - 94	94	INTERIOR		TABLE LAMPS	4	13 Watt Compact Fluorescent Fixture	13	0.052	193	4	Re-Lamp with (1) 10 Watt LED A19	10	0.040	148
MORAINE PARK	CABIN 3 - 96	96	INTERIOR		LIVING ROOM	1	18 Watt Compact Fluorescent Fixture	18	0.018	67	1	Re-Lamp with (1) 10 Watt LED A19	10	0.010	37
MORAINE PARK	CABIN 3 - 96	96	INTERIOR		SINK	1	1-Lamp F15; No Retrofit	15	0.015	56	1	No Retrofit	15	0.015	56

©2013 Energy Systems Group, LLC

EXISTING FIXTURES										PROPOSED FIXTURE UPGRADE				
Park/Building Name	Building	Building #	Phase	Floor	Room Description	Qty	Description	Watts	kW	kWh	Qty	Description	Watts	kW	kWh
MORAINE PARK	CABIN 3 - 96	96	INTERIOR		DINING	1	26 Watt Compact Fluorescent 5-Lamp Fixture	130	0.130	482	1	Re-Lamp with (5) 10 Watt LED A19	50	0.050	185
MORAINE PARK	CABIN 3 - 96	96	INTERIOR		HALLWAY	1	26 Watt Compact Fluorescent 2-Lamp Fixture	52	0.052	193	1	Re-Lamp with (2) 10 Watt LED A19	20	0.020	74
MORAINE PARK	CABIN 3 - 96	96	INTERIOR		BEDROOM	1	26 Watt Compact Fluorescent 2-Lamp Fixture	52	0.052	193	1	Re-Lamp with (2) 10 Watt LED A19	20	0.020	74
MORAINE PARK	CABIN 3 - 96	96	INTERIOR		BEDROOM	1	26 Watt Compact Fluorescent 2-Lamp Fixture	52	0.052	193	1	Re-Lamp with (2) 10 Watt LED A19	20	0.020	74
MORAINE PARK	CABIN 3 - 96	96	INTERIOR		RESTROOM	1	26 Watt Compact Fluorescent 3-Lamp Fixture	78	0.078	289	1	Re-Lamp with (3) 10 Watt LED A19	30	0.030	111
MORAINE PARK	CABIN 3 - 96	96	INTERIOR		RESTROOM	1	18 Watt Compact Fluorescent Fixture	18	0.018	67	1	Re-Lamp with (1) 10 Watt LED A19	10	0.010	37
MORAINE PARK	CABIN 3 - 96	96	EXTERIOR		PORCH	1	26 Watt Compact Fluorescent Canopy Fixture	26	0.026	114	1	New 10 Watt LED Canopy Fixture	12	0.012	53
MORAINE PARK	CABIN 3 - 96	96	INTERIOR		TABLE LAMPS	4	13 Watt Compact Fluorescent Fixture	13	0.052	193	4	Re-Lamp with (1) 10 Watt LED A19	10	0.040	148
MORAINE PARK	CABIN 2 - 95	95	INTERIOR		LIVING ROOM	1	18 Watt Compact Fluorescent Fixture	18	0.018	67	1	Re-Lamp with (1) 10 Watt LED A19	10	0.010	37
MORAINE PARK	CABIN 2 - 95	95	INTERIOR		SINK	1	1-Lamp F15; No Retrofit	15	0.015	56	1	No Retrofit	15	0.015	56
MORAINE PARK	CABIN 2 - 95	95	INTERIOR		DINING	1	26 Watt Compact Fluorescent 5-Lamp Fixture	130	0.130	482	1	Re-Lamp with (5) 10 Watt LED A19	50	0.050	185
MORAINE PARK	CABIN 2 - 95	95	INTERIOR		HALLWAY	1	26 Watt Compact Fluorescent 2-Lamp Fixture	52	0.052	193	1	Re-Lamp with (2) 10 Watt LED A19	20	0.020	74
MORAINE PARK	CABIN 2 - 95	95	INTERIOR		BEDROOM	1	26 Watt Compact Fluorescent 2-Lamp Fixture	52	0.052	193	1	Re-Lamp with (2) 10 Watt LED A19	20	0.020	74
MORAINE PARK	CABIN 2 - 95	95	INTERIOR		BEDROOM	1	26 Watt Compact Fluorescent 2-Lamp Fixture	52	0.052	193	1	Re-Lamp with (2) 10 Watt LED A19	20	0.020	74
MORAINE PARK	CABIN 2 - 95	95	INTERIOR		RESTROOM	1	26 Watt Compact Fluorescent 3-Lamp Fixture	78	0.078	289	1	Re-Lamp with (3) 10 Watt LED A19	30	0.030	111
MORAINE PARK	CABIN 2 - 95	95	INTERIOR		RESTROOM	1	18 Watt Compact Fluorescent Fixture	18	0.018	67	1	Re-Lamp with (1) 10 Watt LED A19	10	0.010	37
MORAINE PARK	CABIN 2 - 95	95	EXTERIOR		PORCH	1	26 Watt Compact Fluorescent Canopy Fixture	26	0.026	114	1	New 10 Watt LED Canopy Fixture	12	0.012	53
MORAINE PARK	CABIN 2 - 95	95	INTERIOR		TABLE LAMPS	4	13 Watt Compact Fluorescent Fixture	13	0.052	193	4	Re-Lamp with (1) 10 Watt LED A19	10	0.040	148
MORAINE PARK	CABIN 4 - 97	97	INTERIOR		LIVING ROOM	1	18 Watt Compact Fluorescent Fixture	18	0.018	67	1	Re-Lamp with (1) 10 Watt LED A19	10	0.010	37
MORAINE PARK	CABIN 4 - 97	97	INTERIOR		SINK	1	1-Lamp F15; No Retrofit	15	0.015	56	1	No Retrofit	15	0.015	56
MORAINE PARK	CABIN 4 - 97	97	INTERIOR		DINING	1	26 Watt Compact Fluorescent 5-Lamp Fixture	130	0.130	482	1	Re-Lamp with (5) 10 Watt LED A19	50	0.050	185
MORAINE PARK	CABIN 4 - 97	97	INTERIOR		HALLWAY	1	26 Watt Compact Fluorescent 2-Lamp Fixture	52	0.052	193	1	Re-Lamp with (2) 10 Watt LED A19	20	0.020	74
MORAINE PARK	CABIN 4 - 97	97	INTERIOR		BEDROOM	1	26 Watt Compact Fluorescent 2-Lamp Fixture	52	0.052	193	1	Re-Lamp with (2) 10 Watt LED A19	20	0.020	74
MORAINE PARK	CABIN 4 - 97	97	INTERIOR		BEDROOM	1	26 Watt Compact Fluorescent 2-Lamp Fixture	52	0.052	193	1	Re-Lamp with (2) 10 Watt LED A19	20	0.020	74
MORAINE PARK	CABIN 4 - 97	97	INTERIOR		RESTROOM	1	26 Watt Compact Fluorescent 3-Lamp Fixture	78	0.078	289	1	Re-Lamp with (3) 10 Watt LED A19	30	0.030	111
MORAINE PARK	CABIN 4 - 97	97	INTERIOR		RESTROOM	1	18 Watt Compact Fluorescent Fixture	18	0.018	67	1	Re-Lamp with (1) 10 Watt LED A19	10	0.010	37

©2013 Energy Systems Group, LLC

EXISTING FIXTURES											PROPOSED FIXTURE UPGRADE				
Park/Building Name	Building	Building #	Phase	Floor	Room Description	Qty	Description	Watts	kW	kWh	Qty	Description	Watts	kW	kWh
MORAINE PARK	CABIN 4 - 97	97	EXTERIOR		PORCH	1	26 Watt Compact Fluorescent Canopy Fixture	26	0.026	114	1	New 10 Watt LED Canopy Fixture	12	0.012	53
MORAINE PARK	CABIN 4 - 97	97	INTERIOR		TABLE LAMPS	4	13 Watt Compact Fluorescent Fixture	13	0.052	193	4	Re-Lamp with (1) 10 Watt LED A19	10	0.040	148
MORAINE PARK	CABIN 5 - 98	98	INTERIOR		LIVING ROOM	1	18 Watt Compact Fluorescent Fixture	18	0.018	67	1	Re-Lamp with (1) 10 Watt LED A19	10	0.010	37
MORAINE PARK	CABIN 5 - 98	98	INTERIOR		SINK	1	1-Lamp F15; No Retrofit	15	0.015	56	1	No Retrofit	15	0.015	56
MORAINE PARK	CABIN 5 - 98	98	INTERIOR		DINING	1	26 Watt Compact Fluorescent 5-Lamp Fixture	130	0.130	482	1	Re-Lamp with (5) 10 Watt LED A19	50	0.050	185
MORAINE PARK	CABIN 5 - 98	98	INTERIOR		HALLWAY	1	26 Watt Compact Fluorescent 2-Lamp Fixture	52	0.052	193	1	Re-Lamp with (2) 10 Watt LED A19	20	0.020	74
MORAINE PARK	CABIN 5 - 98	98	INTERIOR		BEDROOM	1	26 Watt Compact Fluorescent 2-Lamp Fixture	52	0.052	193	1	Re-Lamp with (2) 10 Watt LED A19	20	0.020	74
MORAINE PARK	CABIN 5 - 98	98	INTERIOR		BEDROOM	1	26 Watt Compact Fluorescent 2-Lamp Fixture	52	0.052	193	1	Re-Lamp with (2) 10 Watt LED A19	20	0.020	74
MORAINE PARK	CABIN 5 - 98	98	INTERIOR		RESTROOM	1	26 Watt Compact Fluorescent 3-Lamp Fixture	78	0.078	289	1	Re-Lamp with (3) 10 Watt LED A19	30	0.030	111
MORAINE PARK	CABIN 5 - 98	98	INTERIOR		RESTROOM	1	18 Watt Compact Fluorescent Fixture	18	0.018	67	1	Re-Lamp with (1) 10 Watt LED A19	10	0.010	37
MORAINE PARK	CABIN 5 - 98	98	INTERIOR		PORCH	1	26 Watt Compact Fluorescent Canopy Fixture	26	0.026	96	1	Re-Lamp with (1) 10 Watt LED A19	10	0.010	37
MORAINE PARK	CABIN 5 - 98	98	INTERIOR		TABLE LAMPS	4	13 Watt Compact Fluorescent Fixture	13	0.052	193	4	Re-Lamp with (1) 10 Watt LED A19	10	0.040	148
MORAINE PARK	CABIN 7 - 100	100	INTERIOR		LIVING ROOM	1	18 Watt Compact Fluorescent Fixture	18	0.018	67	1	Re-Lamp with (1) 10 Watt LED A19	10	0.010	37
MORAINE PARK	CABIN 7 - 100	100	INTERIOR		SINK	1	1-Lamp F15; No Retrofit	15	0.015	56	1	No Retrofit	15	0.015	56
MORAINE PARK	CABIN 7 - 100	100	INTERIOR		DINING	1	26 Watt Compact Fluorescent 5-Lamp Fixture	130	0.130	482	1	Re-Lamp with (5) 10 Watt LED A19	50	0.050	185
MORAINE PARK	CABIN 7 - 100	100	INTERIOR		HALLWAY	1	26 Watt Compact Fluorescent 2-Lamp Fixture	52	0.052	193	1	Re-Lamp with (2) 10 Watt LED A19	20	0.020	74
MORAINE PARK	CABIN 7 - 100	100	INTERIOR		BEDROOM	1	26 Watt Compact Fluorescent 2-Lamp Fixture	52	0.052	193	1	Re-Lamp with (2) 10 Watt LED A19	20	0.020	74
MORAINE PARK	CABIN 7 - 100	100	INTERIOR		BEDROOM	1	26 Watt Compact Fluorescent 2-Lamp Fixture	52	0.052	193	1	Re-Lamp with (2) 10 Watt LED A19	20	0.020	74
MORAINE PARK	CABIN 7 - 100	100	INTERIOR		RESTROOM	1	26 Watt Compact Fluorescent 3-Lamp Fixture	78	0.078	289	1	Re-Lamp with (3) 10 Watt LED A19	30	0.030	111
MORAINE PARK	CABIN 7 - 100	100	INTERIOR		RESTROOM	1	18 Watt Compact Fluorescent Fixture	18	0.018	67	1	Re-Lamp with (1) 10 Watt LED A19	10	0.010	37
MORAINE PARK	CABIN 7 - 100	100	EXTERIOR		PORCH	1	26 Watt Compact Fluorescent Canopy Fixture	26	0.026	114	1	New 10 Watt LED Canopy Fixture	12	0.012	53
MORAINE PARK	CABIN 7 - 100	100	INTERIOR		TABLE LAMPS	4	13 Watt Compact Fluorescent Fixture	13	0.052	193	4	Re-Lamp with (1) 10 Watt LED A19	10	0.040	148
MORAINE PARK	BIKE RENTAL - 72	72	INTERIOR		BIKE SHOP	9	100 Watt Incandescent A-Lamp Fixture	100	0.900	2,484	9	Re-Lamp with (1) 18 Watt LED A21	18	0.162	447
MORAINE PARK	BIKE RENTAL - 72	72	INTERIOR		OFFICE	6	T12 1x4 4-Lamp Wrap Fixture; Damaged	144	0.864	2,385	6	New 1x8 2-Lamp Wrap Fixture with (4) 12.5 Watt LED T8 4' Lamps; Direct Wire to Socket	50	0.300	828
MORAINE PARK	BIKE RENTAL - 72	72	INTERIOR		STORAGE	2	T12 1x4 2-Lamp Wrap Fixture	72	0.144	533	2	Retrofit with (2) 12.5 Watt LED T8 4' Lamps; Direct Wire to Socket	25	0.050	185
MORAINE PARK	BIKE RENTAL - 72	72	INTERIOR		WOMENS RESTROOM	3	T8 1x4 2-Lamp Wrap Fixture	62	0.186	513	3	Retrofit with (2) 12.5 Watt LED T8 4' Lamps; Direct Wire to Socket	25	0.075	207

©2013 Energy Systems Group, LLC

				EXISTING FIXTURES									PROPOSED FIXTURE UPGRADE				
Park/Building Name	Building	Building #	Phase	Floor	Room Description	Qty	Description	Watts	kW	kWh	Qty	Description	Watts	kW	kWh
MORAINE PARK	BIKE RENTAL - 72	72	INTERIOR		MENS RESTROOM	3	T8 1x4 2-Lamp Wrap Fixture	62	0.186	513	3	Retrofit with (2) 12.5 Watt LED T8 4' Lamps; Direct Wire to Socket	25	0.075	207
MORAINE PARK	BIKE RENTAL - 72	72	EXTERIOR		EXTERIOR	2	26 Watt Compact Fluorescent 12" Downlight Fixture	26	0.052	112	2	Retrofit with 12 Watt LED 12" Downlight	12	0.024	52
MORAINE PARK	DAM GATE CONTROL - BUILDING 57	57	EXTERIOR		EXTERIOR	6	100 Watt Incandescent A-Lamp Jelly Jar Fixture	100	0.600	2,628	6	Re-Lamp with (1) 18 Watt LED A21	18	0.108	473
MORAINE PARK	BIG RUN ROAD - RESIDENCE - 20	20	INTERIOR		HOUSE	1	Existing LED Fixture; No Retrofit	40	0.040	148	1	No Retrofit	40	0.040	148
MORAINE PARK	BIG RUN ROAD - RESIDENCE - 20	20	INTERIOR		GARAGE	1	13 Watt Compact Fluorescent Fixture	13	0.013	13	1	Re-Lamp with (1) 10 Watt LED A19	10	0.010	10
MORAINE PARK	BIG RUN ROAD - RESIDENCE - 20	20	INTERIOR		GARAGE	1	75 Watt Incandescent A-Lamp Fixture	75	0.075	75	1	Re-Lamp with (1) 10 Watt LED A19	10	0.010	10
MORAINE PARK	BIG RUN ROAD - RESIDENCE - 20	20	EXTERIOR		GARAGE	1	100 Watt 2-Lamp Quartz Flood Fixture	200	0.200	876	1	(2) New 18 Watt LED Flood Fixtures	36	0.036	158
MORAINE PARK	LAKE VIEW MAINTENANCE - CABIN POLE BUILDING 93	93	INTERIOR		LAKEVIEW MAINTENANCE	3	150 Watt Incandescent Jelly Jar	150	0.450	1,170	3	Re-Lamp with (1) 18 Watt LED A21	18	0.054	140
MORAINE PARK	LAKE VIEW MAINTENANCE - CABIN POLE BUILDING 93	93	INTERIOR		LAKEVIEW MAINTENANCE	3	26 Watt Compact Fluorescent Fixture	26	0.078	203	3	Re-Lamp with (1) 10 Watt LED A19	10	0.030	78
MORAINE PARK	LAKE VIEW BEACH HOUSE	78	INTERIOR		MECHANICAL	1	T8 1x4 2-Lamp Wrap Fixture	62	0.062	62	1	Retrofit with (2) 12.5 Watt LED T8 4' Lamps; Direct Wire to Socket	25	0.025	25
MORAINE PARK	LAKE VIEW BEACH HOUSE	78	INTERIOR		MECHANICAL	2	18 Watt Compact Fluorescent Fixture; Very Difficult Access	18	0.036	36	2	Relamp with (1) 10 Watt LED A19; Very Difficult Access	10	0.020	20
MORAINE PARK	LAKE VIEW BEACH HOUSE	78	INTERIOR		WOMENS RESTROOM	4	T12 1x4 2-Lamp Wrap Fixture; Difficult Access	72	0.288	1,067	4	Retrofit with (2) 12.5 Watt LED T8 4' Lamps; Direct Wire to Socket; Difficult Access	25	0.100	370
MORAINE PARK	LAKE VIEW BEACH HOUSE	78	INTERIOR		MENS RESTROOM	4	T12 1x4 2-Lamp Wrap Fixture; Difficult Access	72	0.288	1,067	4	Retrofit with (2) 12.5 Watt LED T8 4' Lamps; Direct Wire to Socket; Difficult Access	25	0.100	370
MORAINE PARK	LAKE VIEW BEACH HOUSE	78	EXTERIOR		EXTERIOR	3	26 Watt Compact Fluorescent Wall Pack	26	0.078	168	3	New 24 Watt LED Wall Pack Fixture; Non-Dark Sky	25	0.075	162
MORAINE PARK	LAKE VIEW BEACH CONCESSIONS	80	INTERIOR		STORAGE	1	T8 1x4 2-Lamp Vaportight Fixture	62	0.062	62	1	Retrofit with (2) 12.5 Watt LED T8 4' Lamps; Direct Wire to Socket	25	0.025	25
MORAINE PARK	LAKE VIEW BEACH CONCESSIONS	80	INTERIOR		MECHANICAL	1	T8 1x4 2-Lamp Vaportight Fixture	62	0.062	62	1	Retrofit with (2) 12.5 Watt LED T8 4' Lamps; Direct Wire to Socket	25	0.025	25
MORAINE PARK	LAKE VIEW BEACH CONCESSIONS	80	INTERIOR		HALLWAY	1	T8 1x4 2-Lamp Vaportight Fixture	62	0.062	171	1	Retrofit with (2) 12.5 Watt LED T8 4' Lamps; Direct Wire to Socket	25	0.025	69
MORAINE PARK	LAKE VIEW BEACH CONCESSIONS	80	INTERIOR		STORAGE	3	T8 1x4 2-Lamp Wrap Fixture	62	0.186	186	3	Retrofit with (2) 12.5 Watt LED T8 4' Lamps; Direct Wire to Socket	25	0.075	75
MORAINE PARK	LAKE VIEW BEACH CONCESSIONS	80	INTERIOR		KITCHEN	4	T8 1x4 2-Lamp Vaportight Fixture	62	0.248	684	4	Retrofit with (2) 12.5 Watt LED T8 4' Lamps; Direct Wire to Socket	25	0.100	276
MORAINE PARK	LAKE VIEW BEACH CONCESSIONS	80	EXTERIOR		EXTERIOR	6	26 Watt Compact Fluorescent Wall Pack	26	0.156	337	6	New 24 Watt LED Wall Pack Fixture; Non-Dark Sky	25	0.150	324
MORAINE PARK	DAVIS HOLLOW COMFORT RESTROOM WEST MARINA	65	INTERIOR		MENS RESTROOM	2	Existing LED Fixture; No Retrofit	30	0.060	166	2	No Retrofit	30	0.060	166
MORAINE PARK	DAVIS HOLLOW COMFORT RESTROOM WEST MARINA	65	INTERIOR		WOMENS RESTROOM	2	Existing LED Fixture; No Retrofit	30	0.060	166	2	No Retrofit	30	0.060	166
MORAINE PARK	DAVIS HOLLOW COMFORT RESTROOM WEST MARINA	65	EXTERIOR		SOFFIT	2	26 Watt Compact Fluorescent Fixture	26	0.052	112	2	Re-Lamp with (1) 10 Watt LED A19	10	0.020	43
MORAINE PARK	DAVIS HOLLOW COMFORT RESTROOM WEST MARINA	65	INTERIOR		MECHANICAL	1	26 Watt Compact Fluorescent Fixture	26	0.026	26	1	Re-Lamp with (1) 10 Watt LED A19	10	0.010	10
MORAINE PARK	DAVIS HOLLOW EAST RESTROOM COMFORT STATION	67	INTERIOR		MENS RESTROOM	2	Existing LED Fixture; No Retrofit	60	0.120	550	2	No Retrofit	60	0.120	550
MORAINE PARK	DAVIS HOLLOW EAST RESTROOM COMFORT STATION	67	INTERIOR		WOMENS RESTROOM	2	Existing LED Fixture; No Retrofit	60	0.120	550	2	No Retrofit	60	0.120	550

©2013 Energy Systems Group, LLC

EXISTING FIXTURES											PROPOSED FIXTURE UPGRADE				
Park/Building Name	Building	Building #	Phase	Floor	Room Description	Qty	Description	Watts	kW	kWh	Qty	Description	Watts	kW	kWh
MORAINE PARK	DAVIS HOLLOW EAST RESTROOM COMFORT STATION	67	EXTERIOR		SOFFIT	2	26 Watt Compact Fluorescent Fixture	26	0.052	112	2	Re-Lamp with (1) 10 Watt LED A19	10	0.020	43
MORAINE PARK	DAVIS HOLLOW EAST RESTROOM COMFORT STATION	67	INTERIOR		MECHANICAL	1	60 Watt Incandescent A-Lamp Fixture	60	0.060	60	1	Re-Lamp with (1) 10 Watt LED A19	10	0.010	10
MORAINE PARK	DAVIS HOLLOW MARINA OFFICE	66	INTERIOR		OFFICE	2	T12 2x4 2-Lamp Surface Mount Fixture	78	0.156	351	2	Retrofit with (2) 12.5 Watt LED T8 4' Lamps; Direct Wire to Socket	25	0.050	112
MORAINE PARK	DAVIS HOLLOW MARINA OFFICE	66	INTERIOR		OFFICE	4	26 Watt Compact Fluorescent Fixture	26	0.104	234	4	Re-Lamp with (1) 10 Watt LED A19	10	0.040	90
MORAINE PARK	DAVIS HOLLOW MARINA OFFICE	66	INTERIOR		OFFICE	1	T12 2x4 4-Lamp Surface Mount Fixture	144	0.144	324	1	Retrofit with (4) 12.5 Watt LED T8 4' Lamps; Direct Wire to Socket	50	0.050	112
MORAINE PARK	DAVIS HOLLOW MARINA OFFICE	66	INTERIOR		RESTROOM	1	60 Watt Incandescent A-Lamp Fixture	60	0.060	31	1	Re-Lamp with (1) 10 Watt LED A19	10	0.010	5
MORAINE PARK	DAVIS HOLLOW MARINA OFFICE	66	INTERIOR		GARAGE	4	T12 2x4 4-Lamp Surface Mount Fixture	144	0.576	576	4	Retrofit with (4) 12.5 Watt LED T8 4' Lamps; Direct Wire to Socket	50	0.200	200
MORAINE PARK	DAVIS HOLLOW MARINA OFFICE	66	INTERIOR		GARAGE	2	60 Watt Incandescent A-Lamp Fixture	60	0.120	120	2	Re-Lamp with (1) 10 Watt LED A19	10	0.020	20
MORAINE PARK	DAVIS HOLLOW MARINA OFFICE	66	EXTERIOR		EXTERIOR	2	13 Watt Compact Fluorescent Fixture	13	0.026	56	2	Re-Lamp with (1) 10 Watt LED A19	10	0.020	43
MORAINE PARK	DAVIS HOLLOW MARINA OFFICE	66	EXTERIOR		EXTERIOR	2	90 Watt Incandescent PAR38 2-Lamp Fixture	180	0.360	778	2	Re-Lamp with (2) 17 Watt LED PAR38	34	0.068	147
MORAINE PARK	DAVIS HOLLOW MARINA OFFICE	66	EXTERIOR		EXTERIOR	8	175 Watt Mercury Vapor Dusk to Dawn Fixture	210	1.680	3,629	8	New 26 Watt LED Dusk to Dawn Barnyard Fixture	26	0.208	449
MORAINE PARK	MCDANIELS PAVILION SHELTER 7	112	INTERIOR		ACTIVITY ROOM	8	T12 1x8 2-Lamp Strip Fixture with 60 Watt Lamps	123	0.984	2,716	8	Retrofit with (4) 12.5 Watt LED T8 4' Lamps and (1) 1x8 4-Lamp Strip Kit; Direct Wire to Socket	50	0.400	1,104
MORAINE PARK	MCDANIELS PAVILION SHELTER 7	112	EXTERIOR		EXTERIOR	1	90 Watt Incandescent 3-Lamp PAR38 Fixture	270	0.270	583	1	Relamp with (3) 17 Watt LED PAR38	51	0.051	110
MORAINE PARK	MAINTENANCE SHED		INTERIOR		SHED	2	T12 1x4 2-Lamp Industrial Strip Fixture	72	0.144	375	2	Retrofit with (2) 12.5 Watt LED T8 4' Lamps; Direct Wire to Socket	25	0.050	130
MORAINE PARK	MAINTENANCE SHED		EXTERIOR		SHED	1	90 Watt Incandescent PAR38 2-Lamp Fixture	180	0.180	788	1	Re-Lamp with (2) 17 Watt LED PAR38	34	0.034	149
MORAINE PARK	DAVIS HOLLOW MARINA SHED	68	INTERIOR		SHED	2	T12 1x4 2-Lamp Industrial Strip Fixture	72	0.144	375	2	Retrofit with (2) 12.5 Watt LED T8 4' Lamps; Direct Wire to Socket	25	0.050	130
MORAINE PARK	DAVIS HOLLOW MARINA SHED	68	INTERIOR		SHED	2	T12 1x4 2-Lamp Wrap Fixture	72	0.144	375	2	Retrofit with (2) 12.5 Watt LED T8 4' Lamps; Direct Wire to Socket	25	0.050	130
MORAINE PARK	MCDANIELS COMFORT STATION	107	INTERIOR		WOMENS RESTROOM	3	26 Watt Compact Fluorescent Canopy Fixture	26	0.078	357	3	Re-Lamp with (1) 10 Watt LED A19	10	0.030	137
MORAINE PARK	MCDANIELS COMFORT STATION	107	INTERIOR		MENS RESTROOM	3	26 Watt Compact Fluorescent Canopy Fixture	26	0.078	357	3	Re-Lamp with (1) 10 Watt LED A19	10	0.030	137
MORAINE PARK	MCDANIELS COMFORT STATION	107	INTERIOR		MECHANICAL	1	26 Watt Compact Fluorescent Fixture	26	0.026	119	1	Re-Lamp with (1) 10 Watt LED A19	10	0.010	46
MORAINE PARK	MCDANIELS COMFORT STATION	107	EXTERIOR		EXTERIOR	1	26 Watt Compact Fluorescent Canopy Fixture	26	0.026	75	1	New 10 Watt LED Canopy Fixture	12	0.012	35
MORAINE PARK	MCDANIELS COMFORT STATION	107	EXTERIOR		EXTERIOR	1	100 Watt Incandescent A-Lamp; PAR Holder	100	0.100	288	1	Re-Lamp with (1) 17 Watt LED PAR38	17	0.017	49
MORAINE PARK	MCDANIELS COMFORT STATION	107	EXTERIOR		EXTERIOR	1	100 Watt Incandescent 2-Lamp A-Lamp; PAR Holder	200	0.200	576	1	Re-Lamp with (2) 17 Watt LED PAR38	34	0.034	98
MORAINE PARK	MCDANIELS COMFORT STATION	107	EXTERIOR		EXTERIOR	1	175 Watt Mercury Vapor Dusk to Dawn Fixture; No Retrofit - Fixture is in contact with high voltage; Safety Risk to Replace	215	0.215	619	1	No Retrofit	215	0.215	619
MORAINE PARK	CRESCENT BAY GENERATOR LIFT - 7	139	INTERIOR		GENERATOR	3	100 Watt Incandescent A-Lamp Jelly Jar Fixture	100	0.300	780	3	Re-Lamp with (1) 18 Watt LED A21	18	0.054	140
MORAINE PARK	MUDDY CREEK OIL FIELD EXHIBIT	18	INTERIOR		LOCKED	1	No Access; Area(s) Not Included in Scope/Pricing	0	0.000	0	1	No Retrofit	0	0.000	0

©2013 Energy Systems Group, LLC

EXISTING FIXTURES												PROPOSED FIXTURE UPGRADE				
Park/Building Name	Building	Building #	Phase	Floor	Room Description	Qty	Description	Watts	kW	kWh	Qty	Description	Watts	kW	kWh
MORAINE PARK	MUDDY CREEK OIL FIELD EXHIBIT	18	EXTERIOR		EXTERIOR	1	175 Watt Mercury Vapor Dusk to Dawn Fixture	210	0.210	302	1	New 26 Watt LED Dusk to Dawn Barnyard Fixture	26	0.026	37
MORAINE PARK	PLEASANT VALLEY OIL SHED MAINTENANCE GARAGE	29	INTERIOR		MECHANICAL	2	100 Watt Incandescent A-Lamp Jelly Jar Fixture	100	0.200	520	2	Re-Lamp with (1) 18 Watt LED A21	18	0.036	94
MORAINE PARK	PLEASANT VALLEY OIL SHED MAINTENANCE GARAGE	29	EXTERIOR		EXTERIOR	1	100 Watt Incandescent A-Lamp Jelly Jar Fixture	100	0.100	438	1	Re-Lamp with (1) 18 Watt LED A21	18	0.018	79
MORAINE PARK	SEWAGE TREATMENT PLANT	134	INTERIOR		CONTROL BUILDING SEWER PLANT	1	Building set to be demolished for new construction. Area(s) Not Included in Scope/Pricing	0	0.000	0	1	No Retrofit	0	0.000	0
MORAINE PARK	SEWAGE TREATMENT PLANT	134	INTERIOR		NEW BUILDING	1	Existing LED Fixture; No Retrofit	40	0.040	104	1	No Retrofit	40	0.040	104
MORAINE PARK	SNYDERS MAINTENANCE	83	INTERIOR		HALLWAY	1	T12 1x4 2-Lamp Wrap Fixture	72	0.072	187	1	Retrofit with (2) 12.5 Watt LED T8 4' Lamps; Direct Wire to Socket	25	0.025	65
MORAINE PARK	SNYDERS MAINTENANCE	83	INTERIOR		OFFICE	4	T12 1x4 2-Lamp Wrap Fixture	72	0.288	749	4	Retrofit with (2) 12.5 Watt LED T8 4' Lamps; Direct Wire to Socket	25	0.100	260
MORAINE PARK	SNYDERS MAINTENANCE	83	INTERIOR		BREAK ROOM	4	T12 1x4 2-Lamp Wrap Fixture	72	0.288	749	4	Retrofit with (2) 12.5 Watt LED T8 4' Lamps; Direct Wire to Socket	25	0.100	260
MORAINE PARK	SNYDERS MAINTENANCE	83	INTERIOR		MECHANICAL	2	T12 1x4 2-Lamp Industrial Strip Fixture	72	0.144	144	2	Retrofit with (2) 12.5 Watt LED T8 4' Lamps; Direct Wire to Socket	25	0.050	50
MORAINE PARK	SNYDERS MAINTENANCE	83	INTERIOR		BACK HALLWAY	2	T12 1x4 2-Lamp Wrap Fixture	72	0.144	375	2	Retrofit with (2) 12.5 Watt LED T8 4' Lamps; Direct Wire to Socket	25	0.050	130
MORAINE PARK	SNYDERS MAINTENANCE	83	INTERIOR		RESTROOM	2	T12 1x4 2-Lamp Wrap Fixture	72	0.144	375	2	Retrofit with (2) 12.5 Watt LED T8 4' Lamps; Direct Wire to Socket	25	0.050	130
MORAINE PARK	SNYDERS MAINTENANCE	83	INTERIOR		GARAGE	9	T12 1x4 2-Lamp Industrial Strip Fixture	72	0.648	1,685	9	Retrofit with (2) 12.5 Watt LED T8 4' Lamps; Direct Wire to Socket	25	0.225	585
MORAINE PARK	SNYDERS MAINTENANCE	83	INTERIOR		GARAGE STORAGE	1	T12 1x4 2-Lamp Industrial Strip Fixture	72	0.072	72	1	Retrofit with (2) 12.5 Watt LED T8 4' Lamps; Direct Wire to Socket	25	0.025	25
MORAINE PARK	SNYDERS MAINTENANCE	83	INTERIOR		SHOP	6	T12 1x4 2-Lamp Industrial Strip Fixture	72	0.432	1,124	6	Retrofit with (2) 12.5 Watt LED T8 4' Lamps; Direct Wire to Socket	25	0.150	390
MORAINE PARK	SNYDERS MAINTENANCE	83	EXTERIOR		EXTERIOR	9	18 Watt Compact Fluorescent Wall Pack Fixture	18	0.162	710	9	New 12 Watt LED Wall Pack Fixture	14	0.126	552
MORAINE PARK	WATER TREATMENT PLANT	73	INTERIOR		PUMP ROOM	8	T12 1x4 2-Lamp Vaportight Fixture	72	0.576	1,498	8	Retrofit with (2) 12.5 Watt LED T8 4' Lamps; Direct Wire to Socket	25	0.200	520
MORAINE PARK	WATER TREATMENT PLANT	73	INTERIOR		MEZZANINE	8	T12 1x4 2-Lamp Vaportight Fixture	72	0.576	1,498	8	Retrofit with (2) 12.5 Watt LED T8 4' Lamps; Direct Wire to Socket	25	0.200	520
MORAINE PARK	WATER TREATMENT PLANT	73	INTERIOR		MEZZANINE STORAGE	2	100 Watt Incandescent Explosion Proof Fixture	100	0.200	200	2	Relamp with (1) 18 Watt LED A21; Difficult Access	15	0.030	30
MORAINE PARK	WATER TREATMENT PLANT	73	INTERIOR		MEZZANINE STORAGE	3	500 Watt Quartz Flood Fixture	500	1.500	1,500	3	New 52 Watt LED Flood Fixture	54	0.162	162
MORAINE PARK	WATER TREATMENT PLANT	73	INTERIOR		CHLORINE ROOM	1	23 Watt Compact Fluorescent Explosion Proof Fixture	23	0.023	23	1	Relamp with (1) 10 Watt LED A19; Difficult Access	10	0.010	10
MORAINE PARK	WATER TREATMENT PLANT	73	INTERIOR		MENS RESTROOM	1	Existing LED Fixture; No Retrofit	40	0.040	21	1	No Retrofit	40	0.040	21
MORAINE PARK	WATER TREATMENT PLANT	73	INTERIOR		MENS RESTROOM	1	T8 2x2 2-Lamp U-Lamp Troffer Fixture with 6' Lamps	62	0.062	32	1	Retrofit with (2) 10 Watt LED T8 2' Lamps and (1) 2x2 2-Lamp White Reflector Kit; Direct Wire to Socket	20	0.020	10
MORAINE PARK	WATER TREATMENT PLANT	73	INTERIOR		PUMP ROOM	17	23 Watt Compact Fluorescent Jelly Jar	23	0.391	1,017	17	Re-Lamp with (1) 10 Watt LED A19	10	0.170	442
MORAINE PARK	WATER TREATMENT PLANT	73	INTERIOR		PUMP ROOM	2	Existing LED Fixture; No Retrofit	20	0.040	104	2	No Retrofit	20	0.040	104
MORAINE PARK	WATER TREATMENT PLANT	73	INTERIOR		OFFICE	6	T12 2x4 4-Lamp Troffer Fixture	144	0.864	2,247	6	Retrofit with (4) 12.5 Watt LED T8 4' Lamps; Direct Wire to Socket	50	0.300	780
MORAINE PARK	WATER TREATMENT PLANT	73	INTERIOR		ELECTRICAL	3	T12 1x4 2-Lamp Vaportight Fixture	72	0.216	562	3	Retrofit with (2) 12.5 Watt LED T8 4' Lamps; Direct Wire to Socket	25	0.075	195

©2013 Energy Systems Group, LLC

EXISTING FIXTURES											PROPOSED FIXTURE UPGRADE				
Park/Building Name	Building	Building #	Phase	Floor	Room Description	Qty	Description	Watts	kW	kWh	Qty	Description	Watts	kW	kWh
MORAINE PARK	WATER TREATMENT PLANT	73	EXTERIOR		EXTERIOR	2	100 Watt High Pressure Sodium Wall Pack Fixture	125	0.250	1,095	2	New 24 Watt LED Wall Pack Fixture; Non-Dark Sky	25	0.050	219
MORAINE PARK	WATTS BAY COMFORT STATION	82	INTERIOR		WOMENS RESTROOM	3	T12 1x4 2-Lamp Wrap Fixture	72	0.216	989	3	Retrofit with (2) 12.5 Watt LED T8 4' Lamps; Direct Wire to Socket	25	0.075	344
MORAINE PARK	WATTS BAY COMFORT STATION	82	INTERIOR		MENS RESTROOM	1	T12 1x4 2-Lamp Wrap Fixture	72	0.072	330	1	Retrofit with (2) 12.5 Watt LED T8 4' Lamps; Direct Wire to Socket	25	0.025	115
MORAINE PARK	WATTS BAY COMFORT STATION	82	INTERIOR		MENS RESTROOM	2	T12 1x4 2-Lamp Wrap Fixture; Damaged	72	0.144	660	2	New 1x4 2-Lamp Wrap Fixture with (2) 12.5 Watt LED T8 4' Lamp; Direct Wire to Socket	25	0.050	229
MORAINE PARK	WATTS BAY COMFORT STATION	82	INTERIOR		MECHANICAL	2	23 Watt Compact Fluorescent Fixture	23	0.046	46	2	Re-Lamp with (1) 10 Watt LED A19	10	0.020	20
MORAINE PARK	WATTS BAY COMFORT STATION	82	EXTERIOR		EXTERIOR	4	23 Watt Compact Fluorescent Wall Pack Fixture	23	0.092	265	4	New 24 Watt LED Wall Pack Fixture; Non-Dark Sky	25	0.100	288
MORAINE PARK	WATTS BAY COMFORT STATION	82	EXTERIOR		EXTERIOR	1	175 Watt Mercury Vapor Dusk to Dawn Fixture	210	0.210	605	1	New 26 Watt LED Dusk to Dawn Barnyard Fixture	26	0.026	75
MORAINE PARK	BOY SCOUT WAREHOUSE	75	INTERIOR		STORAGE	2	23 Watt Compact Fluorescent Fixture	23	0.046	46	2	Re-Lamp with (1) 10 Watt LED A19	10	0.020	20
MORAINE PARK	BOY SCOUT WAREHOUSE	75	INTERIOR		STORAGE	4	100 Watt Incandescent A-Lamp Fixture	100	0.400	400	4	Re-Lamp with (1) 18 Watt LED A21	18	0.072	72
MORAINE PARK	BOY SCOUT WAREHOUSE	75	INTERIOR		BACK STORAGE	2	T12 1x8 2-Lamp Strip Fixture with 60 Watt Lamps	123	0.246	246	2	Retrofit with (4) 12.5 Watt LED T8 4' Lamps and (1) 1x8 4-Lamp Strip Kit; Direct Wire to Socket	50	0.100	100
MORAINE PARK	BOY SCOUT WAREHOUSE	75	INTERIOR		BACK STORAGE	10	150 Watt Incandescent A-Lamp Fixture	150	1.500	1,500	10	Re-Lamp with (1) 18 Watt LED A21	18	0.180	180
MORAINE PARK	BOY SCOUT WAREHOUSE	75	INTERIOR		MEZZANINE	3	23 Watt Compact Fluorescent Jelly Jar	23	0.069	179	3	Re-Lamp with (1) 10 Watt LED A19	10	0.030	78
MORAINE PARK	BOY SCOUT WAREHOUSE	75	INTERIOR		MEZZANINE	2	T8 1x4 2-Lamp Wrap Fixture	62	0.124	323	2	Retrofit with (2) 12.5 Watt LED T8 4' Lamps; Direct Wire to Socket	25	0.050	130
MORAINE PARK	BOY SCOUT WAREHOUSE	75	EXTERIOR		EXTERIOR	2	175 Watt Mercury Vapor Dusk to Dawn Fixture	210	0.420	1,840	2	New 26 Watt LED Dusk to Dawn Barnyard Fixture	26	0.052	228
MORAINE PARK	BOY SCOUT WAREHOUSE	75	EXTERIOR		EXTERIOR	1	100 Watt Jelly Jar Fixture; Damaged	100	0.100	438	1	New 18 Watt LED A21 Jelly Jar Fixture	15	0.015	66
MORAINE PARK	DAM HOUSE		INTERIOR		DAM HOUSE	1	No Access; Area(s) Not Included in Scope/Pricing	0	0.000	0	1	No Retrofit	0	0.000	0
MORAINE PARK	DAVIS HOLLOW PUBLIC LAUNCH COMFORT STATION	64	INTERIOR		MECHANICAL	1	75 Watt Incandescent A-Lamp Fixture	75	0.075	344	1	Re-Lamp with (1) 10 Watt LED A19	10	0.010	46
MORAINE PARK	DAVIS HOLLOW PUBLIC LAUNCH COMFORT STATION	64	INTERIOR		MENS RESTROOM	2	23 Watt Compact Fluorescent Fixture	23	0.046	211	2	Re-Lamp with (1) 10 Watt LED A19	10	0.020	92
MORAINE PARK	DAVIS HOLLOW PUBLIC LAUNCH COMFORT STATION	64	INTERIOR		WOMENS RESTROOM	2	23 Watt Compact Fluorescent Fixture	23	0.046	211	2	Re-Lamp with (1) 10 Watt LED A19	10	0.020	92
MORAINE PARK	DAVIS HOLLOW PUBLIC LAUNCH COMFORT STATION	64	EXTERIOR		EXTERIOR	1	175 Watt Mercury Vapor Dusk to Dawn Fixture	210	0.210	605	1	New 26 Watt LED Dusk to Dawn Barnyard Fixture	26	0.026	75
MORAINE PARK	PLEASANT VALLEY BEACH LIFE GUARD FIRST AID STATION	35	INTERIOR		OFFICE	4	26 Watt Compact Fluorescent Fixture	26	0.104	287	4	Re-Lamp with (1) 10 Watt LED A19	10	0.040	110
MORAINE PARK	PLEASANT VALLEY BEACH LIFE GUARD FIRST AID STATION	35	INTERIOR		CLOSET	1	100 Watt Incandescent A-Lamp Fixture	100	0.100	276	1	Re-Lamp with (1) 18 Watt LED A21	18	0.018	50
MORAINE PARK	PLEASANT VALLEY BEACH LIFE GUARD FIRST AID STATION	35	INTERIOR		CLOSET	1	100 Watt Incandescent A-Lamp Fixture	100	0.100	276	1	Re-Lamp with (1) 18 Watt LED A21	18	0.018	50
MORAINE PARK	PLEASANT VALLEY BEACH LIFE GUARD FIRST AID STATION	35	INTERIOR		CLOSET	1	100 Watt Incandescent A-Lamp Fixture	100	0.100	276	1	Re-Lamp with (1) 18 Watt LED A21	18	0.018	50
MORAINE PARK	PLEASANT VALLEY BEACH LIFE GUARD FIRST AID STATION	35	INTERIOR		CLOSET	1	100 Watt Incandescent A-Lamp Fixture	100	0.100	276	1	Re-Lamp with (1) 18 Watt LED A21	18	0.018	50
MORAINE PARK	PLEASANT VALLEY BEACH LIFE GUARD FIRST AID STATION	35	INTERIOR		RESTROOM	1	26 Watt Compact Fluorescent Fixture	26	0.026	72	1	Re-Lamp with (1) 10 Watt LED A19	10	0.010	28

©2013 Energy Systems Group, LLC

EXISTING FIXTURES											PROPOSED FIXTURE UPGRADE				
Park/Building Name	Building	Building #	Phase	Floor	Room Description	Qty	Description	Watts	kW	kWh	Qty	Description	Watts	kW	kWh
MORAINE PARK	PLEASANT VALLEY BEACH LIFE GUARD FIRST AID STATION	35	EXTERIOR		EXTERIOR	1	26 Watt Compact Fluorescent Fixture	26	0.026	37	1	Re-Lamp with (1) 10 Watt LED A19	10	0.010	14
MORAINE PARK	DAVIS HOLLOW CABIN	69	INTERIOR		DINING	1	40 Watt Incandescent 5-Lamp A-Lamp	200	0.200	741	1	Re-Lamp with (5) 7 Watt LED A19	35	0.035	130
MORAINE PARK	DAVIS HOLLOW CABIN	69	INTERIOR		SMALL KITCHEN	1	40 Watt Incandescent Globe Fixture	40	0.040	148	1	Re-Lamp with (1) 8 Watt LED G25 Globe	8	0.008	30
MORAINE PARK	DAVIS HOLLOW CABIN	69	INTERIOR		SMALL KITCHEN	2	40 Watt Incandescent A-Lamp Fixture	40	0.080	296	2	Re-Lamp with (1) 7 Watt LED A19	7	0.014	52
MORAINE PARK	DAVIS HOLLOW CABIN	69	INTERIOR		RESTROOM	1	40 Watt Incandescent Globe Fixture	40	0.040	148	1	Re-Lamp with (1) 8 Watt LED G25 Globe	8	0.008	30
MORAINE PARK	DAVIS HOLLOW CABIN	69	INTERIOR		LARGE KITCHEN	3	40 Watt Incandescent Globe Fixture	40	0.120	444	3	Re-Lamp with (1) 8 Watt LED G25 Globe	8	0.024	89
MORAINE PARK	DAVIS HOLLOW CABIN	69	INTERIOR		LIVING ROOM	1	40 Watt Incandescent 5-Lamp A-Lamp	200	0.200	741	1	Re-Lamp with (5) 7 Watt LED A19	35	0.035	130
MORAINE PARK	DAVIS HOLLOW CABIN	69	INTERIOR		LIVING ROOM	2	40 Watt Incandescent 4-Lamp Fixture	160	0.320	1,185	2	Re-Lamp with (4) 7 Watt LED A19	28	0.056	207
MORAINE PARK	DAVIS HOLLOW CABIN	69	INTERIOR		LIVING ROOM	6	13 Watt Compact Fluorescent Fixture	13	0.078	289	6	Re-Lamp with (1) 10 Watt LED A19	10	0.060	222
MORAINE PARK	DAVIS HOLLOW CABIN	69	INTERIOR		LIVING ROOM CLOSET	1	60 Watt Incandescent A-Lamp Fixture	60	0.060	60	1	Re-Lamp with (1) 10 Watt LED A19	10	0.010	10
MORAINE PARK	DAVIS HOLLOW CABIN	69	INTERIOR		STAIRS	1	23 Watt Compact Fluorescent Fixture	23	0.023	85	1	Re-Lamp with (1) 10 Watt LED A19	10	0.010	37
MORAINE PARK	DAVIS HOLLOW CABIN	69	INTERIOR		BEDROOM	1	40 Watt Incandescent 4-Lamp Fixture	160	0.160	593	1	Re-Lamp with (4) 7 Watt LED A19	28	0.028	104
MORAINE PARK	DAVIS HOLLOW CABIN	69	INTERIOR		BEDROOM	1	40 Watt Incandescent A-Lamp Fixture	40	0.040	148	1	Re-Lamp with (1) 7 Watt LED A19	7	0.007	26
MORAINE PARK	DAVIS HOLLOW CABIN	69	INTERIOR		RESTROOM	1	40 Watt Incandescent Globe Fixture	40	0.040	148	1	Re-Lamp with (1) 8 Watt LED G25 Globe	8	0.008	30
MORAINE PARK	DAVIS HOLLOW CABIN	69	INTERIOR		BEDROOM	2	40 Watt Incandescent Globe Fixture	40	0.080	296	2	Re-Lamp with (1) 8 Watt LED G25 Globe	8	0.016	59
MORAINE PARK	DAVIS HOLLOW CABIN	69	INTERIOR		BEDROOM	1	40 Watt Incandescent A-Lamp Fixture	40	0.040	148	1	Re-Lamp with (1) 7 Watt LED A19	7	0.007	26
MORAINE PARK	DAVIS HOLLOW CABIN	69	EXTERIOR		EXTERIOR	5	60 Watt Incandescent A-Lamp Jelly Jar Fixture	60	0.300	1,314	5	Re-Lamp with (1) 10 Watt LED A19	10	0.050	219
MORAINE PARK	DAVIS HOLLOW CABIN	69	EXTERIOR		EXTERIOR	2	75 Watt Incandescent PAR38	75	0.150	657	2	Re-Lamp with (1) 17 Watt LED PAR38	17	0.034	149
MORAINE PARK	DAVIS HOLLOW CABIN	69	EXTERIOR		EXTERIOR	1	75 Watt Incandescent PAR38 2-Lamp	150	0.150	657	1	Re-Lamp with (2) 17 Watt LED PAR38	34	0.034	149
MORAINE PARK	DAVIS HOLLOW CABIN	69	INTERIOR		BASEMENT	3	60 Watt Incandescent A-Lamp Fixture	60	0.180	667	3	Re-Lamp with (1) 10 Watt LED A19	10	0.030	111
MORAINE PARK	MCDANIELS GIFT SHOP BIRD BARN	130	INTERIOR		GIFT SHOP	12	13 Watt Plug-In CFL Track Fixture	14	0.168	242	12	No Retrofit	14	0.168	242
MORAINE PARK	MCDANIELS GIFT SHOP BIRD BARN	130	INTERIOR		GIFT SHOP	11	26 Watt Compact Fluorescent Downlight	26	0.286	412	11	Re-Lamp with (1) 10 Watt LED BR30	10	0.110	158
MORAINE PARK	MCDANIELS GIFT SHOP BIRD BARN	130	INTERIOR		GIFT SHOP	2	65 Watt Incandescent R30 Fixture	65	0.130	187	2	Re-Lamp with (1) 10 Watt LED BR30	10	0.020	29
MORAINE PARK	MCDANIELS GIFT SHOP BIRD BARN	130	INTERIOR		GIFT SHOP	2	T12 1x4 2-Lamp Wrap Fixture	72	0.144	207	2	Retrofit with (2) 12.5 Watt LED T8 4' Lamps; Direct Wire to Socket	25	0.050	72
MORAINE PARK	MCDANIELS GIFT SHOP BIRD BARN	130	INTERIOR		BARN OWL	2	26 Watt Compact Fluorescent Fixture	26	0.052	75	2	Re-Lamp with (1) 10 Watt LED A19	10	0.020	29
MORAINE PARK	MCDANIELS GIFT SHOP BIRD BARN	130	INTERIOR		STORAGE	1	75 Watt Incandescent A-Lamp Fixture	75	0.075	75	1	Re-Lamp with (1) 10 Watt LED A19	10	0.010	10

©2013 Energy Systems Group, LLC

EXISTING FIXTURES												PROPOSED FIXTURE UPGRADE				
Park/Building Name	Building	Building #	Phase	Floor	Room Description	Qty	Description	Watts	kW	kWh	Qty	Description	Watts	kW	kWh
MORAINE PARK	MCDANIELS GIFT SHOP BIRD BARN	130	INTERIOR		STORAGE	1	18 Watt Compact Fluorescent Fixture	18	0.018	18	1	Re-Lamp with (1) 10 Watt LED A19	10	0.010	10
MORAINE PARK	MCDANIELS GIFT SHOP BIRD BARN	130	INTERIOR		HALL/BACK ROOM	4	18 Watt Compact Fluorescent Fixture	18	0.072	104	4	Re-Lamp with (1) 10 Watt LED A19	10	0.040	58
MORAINE PARK	MCDANIELS GIFT SHOP BIRD BARN	130	INTERIOR		HALL/BACK ROOM	4	75 Watt Incandescent A-Lamp Fixture	75	0.300	432	4	Re-Lamp with (1) 10 Watt LED A19	10	0.040	58
MORAINE PARK	MCDANIELS GIFT SHOP BIRD BARN	130	INTERIOR		RESTROOM	1	T8 2x4 4-Lamp Troffer Fixture	106	0.106	153	1	Retrofit with (4) 12.5 Watt LED T8 4' Lamps; Direct Wire to Socket	50	0.050	72
MORAINE PARK	MCDANIELS GIFT SHOP BIRD BARN	130	INTERIOR		MECHANICAL/STORAGE	2	26 Watt Compact Fluorescent Fixture	26	0.052	52	2	Re-Lamp with (1) 10 Watt LED A19	10	0.020	20
MORAINE PARK	MCDANIELS GIFT SHOP BIRD BARN	130	INTERIOR		MECHANICAL/STORAGE	2	100 Watt Incandescent A-Lamp Fixture	100	0.200	200	2	Re-Lamp with (1) 18 Watt LED A21	18	0.036	36
MORAINE PARK	MCDANIELS GIFT SHOP BIRD BARN	130	INTERIOR		BARN OWL	1	26 Watt Compact Fluorescent Fixture	26	0.026	37	1	Re-Lamp with (1) 10 Watt LED A19	10	0.010	14
MORAINE PARK	MCDANIELS GIFT SHOP BIRD BARN	130	INTERIOR		BARN OWL	1	100 Watt Incandescent A-Lamp Fixture	100	0.100	144	1	Re-Lamp with (1) 18 Watt LED A21	18	0.018	26
MORAINE PARK	MCDANIELS GIFT SHOP BIRD BARN	130	INTERIOR		BARN OWL	1	100 Watt Incandescent A-Lamp Fixture	100	0.100	144	1	Re-Lamp with (1) 18 Watt LED A21	18	0.018	26
MORAINE PARK	MCDANIELS GIFT SHOP BIRD BARN	130	INTERIOR		BARN OWL	1	26 Watt Compact Fluorescent Fixture	26	0.026	37	1	Re-Lamp with (1) 10 Watt LED A19	10	0.010	14
MORAINE PARK	MCDANIELS GIFT SHOP BIRD BARN	130	EXTERIOR		EXTERIOR	1	175 Watt Mercury Vapor Dusk to Dawn Fixture	210	0.210	454	1	New 26 Watt LED Dusk to Dawn Barnyard Fixture	26	0.026	56
MORAINE PARK	MCDANIELS GIFT SHOP BIRD BARN	130	EXTERIOR		EXTERIOR	2	90 Watt Incandescent PAR38 2-Lamp Fixture	180	0.360	778	2	Re-Lamp with (2) 17 Watt LED PAR38	34	0.068	147
MORAINE PARK	MCDANIELS GIFT SHOP BIRD BARN	130	INTERIOR		BOAT LIFT	1	175 Watt Mercury Vapor Dusk to Dawn Fixture	210	0.210	454	1	New 26 Watt LED Dusk to Dawn Barnyard Fixture	26	0.026	56
MORAINE PARK	LIFT STATION 1 - BEAR RUN	136	INTERIOR		MECHANICAL	2	T8 1x4 2-Lamp Wrap Fixture	62	0.124	124	2	Retrofit with (2) 12.5 Watt LED T8 4' Lamps; Direct Wire to Socket	25	0.050	50
MORAINE PARK	LIFT STATION 1 - BEAR RUN	136	INTERIOR		MECHANICAL	1	100 Watt Incandescent A-Lamp Jelly Jar Fixture	100	0.100	100	1	Re-Lamp with (1) 18 Watt LED A21	18	0.018	18
MORAINE PARK	LIFT STATION 1 - BEAR RUN	136	EXTERIOR		EXTERIOR	1	175 Watt Mercury Vapor Dusk to Dawn Fixture	210	0.210	454	1	New 26 Watt LED Dusk to Dawn Barnyard Fixture	26	0.026	56
MORAINE PARK	LIFT STATION 7	133	INTERIOR		PUMP ROOM	6	T12 1x4 2-Lamp Vaportight Fixture	72	0.432	1,124	6	Retrofit with (2) 12.5 Watt LED T8 4' Lamps; Direct Wire to Socket	25	0.150	390
MORAINE PARK	REGIONAL OFFICE SHED	126	INTERIOR		SHED	1	100 Watt Jelly Jar Fixture; Damaged	100	0.100	260	1	New 18 Watt LED A21 Jelly Jar Fixture	15	0.015	39
MORAINE PARK	CRESCENT BAY BOAT AND RENTAL - MARINA CONCESSIONS	142	INTERIOR		STORE	5	T12 1x4 4-Lamp Wrap Fixture	144	0.720	1,987	5	Retrofit with (4) 12.5 Watt LED T8 4' Lamps; Direct Wire to Socket	50	0.250	690
MORAINE PARK	CRESCENT BAY BOAT AND RENTAL - MARINA CONCESSIONS	142	INTERIOR		STORAGE	2	T12 1x4 4-Lamp Wrap Fixture	144	0.288	795	2	Retrofit with (4) 12.5 Watt LED T8 4' Lamps; Direct Wire to Socket	50	0.100	276
MORAINE PARK	CRESCENT BAY BOAT AND RENTAL - MARINA CONCESSIONS	142	INTERIOR		STORAGE	1	100 Watt Incandescent A-Lamp Jelly Jar Fixture	100	0.100	276	1	Re-Lamp with (1) 18 Watt LED A21	18	0.018	50
MORAINE PARK	CRESCENT BAY BOAT AND RENTAL - MARINA CONCESSIONS	142	INTERIOR		STORAGE	1	25 Watt Incandescent 2-Lamp Exit Sign	50	0.050	438	1	New 3 watt LED Exit Sign	3	0.003	26
MORAINE PARK	CRESCENT BAY BOAT AND RENTAL - MARINA CONCESSIONS	142	INTERIOR		OFFICE	2	T12 1x4 4-Lamp Wrap Fixture	144	0.288	795	2	Retrofit with (4) 12.5 Watt LED T8 4' Lamps; Direct Wire to Socket	50	0.100	276
MORAINE PARK	CRESCENT BAY BOAT AND RENTAL - MARINA CONCESSIONS	142	INTERIOR		RESTROOM	1	T12 1x4 1-Lamp Vaportight Fixture	43	0.043	119	1	Retrofit with (1) 12.5 Watt LED T8 4' Lamps; Direct Wire to Socket	12.5	0.013	35
MORAINE PARK	CRESCENT BAY BOAT AND RENTAL - MARINA CONCESSIONS	142	INTERIOR		GARAGE	6	T12 1x4 2-Lamp Industrial Strip Fixture	72	0.432	1,192	6	Retrofit with (2) 12.5 Watt LED T8 4' Lamps; Direct Wire to Socket	25	0.150	414
MORAINE PARK	CRESCENT BAY BOAT AND RENTAL - MARINA CONCESSIONS	142	INTERIOR		GARAGE	2	25 Watt Incandescent 2-Lamp Exit Sign	50	0.100	876	2	New 3 watt LED Exit Sign	3	0.006	53

©2013 Energy Systems Group, LLC

EXISTING FIXTURES											PROPOSED FIXTURE UPGRADE				
Park/Building Name	Building	Building #	Phase	Floor	Room Description	Qty	Description	Watts	kW	kWh	Qty	Description	Watts	kW	kWh
MORAINE PARK	CRESCENT BAY BOAT AND RENTAL - MARINA CONCESSIONS	142	EXTERIOR		EXTERIOR	7	100 Watt High Pressure Sodium Wall Pack Fixture	125	0.875	1,890	7	New 24 Watt LED Wall Pack Fixture; Non-Dark Sky	25	0.175	378
MORAINE PARK	CRESCENT BAY BOAT AND RENTAL - MARINA CONCESSIONS	142	EXTERIOR		EXTERIOR	1	T8 1x4 1-Lamp Vaportight Fixture	30	0.030	65	1	Retrofit with (1) 12.5 Watt LED T8 4' Lamps; Direct Wire to Socket	12.5	0.013	27
MORAINE PARK	PLEASANT VALLEY BEACH CONCESSION STAND	38	INTERIOR		KITCHEN	6	26 Watt Compact Fluorescent Fixture	26	0.156	431	6	Re-Lamp with (1) 10 Watt LED A19	10	0.060	166
MORAINE PARK	PLEASANT VALLEY BEACH CONCESSION STAND	38	INTERIOR		KITCHEN HOOD	2	18 Watt Compact Fluorescent Fixture	18	0.036	99	2	Re-Lamp with (1) 10 Watt LED A19	10	0.020	55
MORAINE PARK	PLEASANT VALLEY BEACH CONCESSION STAND	38	INTERIOR		KITCHEN PREP	4	26 Watt Compact Fluorescent Fixture	26	0.104	287	4	Re-Lamp with (1) 10 Watt LED A19	10	0.040	110
MORAINE PARK	PLEASANT VALLEY BEACH CONCESSION STAND	38	INTERIOR		KITCHEN STORAGE	1	26 Watt Compact Fluorescent Fixture	26	0.026	72	1	Re-Lamp with (1) 10 Watt LED A19	10	0.010	28
MORAINE PARK	PLEASANT VALLEY BEACH CONCESSION STAND	38	INTERIOR		KITCHEN STORAGE	1	60 Watt Incandescent A-Lamp Fixture	60	0.060	166	1	Re-Lamp with (1) 10 Watt LED A19	10	0.010	28
MORAINE PARK	PLEASANT VALLEY BEACH CONCESSION STAND	38	INTERIOR		KITCHEN RESTROOM	1	100 Watt Incandescent A-Lamp Fixture	100	0.100	276	1	Re-Lamp with (1) 18 Watt LED A21	18	0.018	50
MORAINE PARK	PLEASANT VALLEY BEACH CONCESSION STAND	38	INTERIOR		KITCHEN CHASE	1	100 Watt Incandescent A-Lamp Fixture	100	0.100	276	1	Re-Lamp with (1) 18 Watt LED A21	18	0.018	50
MORAINE PARK	PLEASANT VALLEY BEACH CONCESSION STAND	38	EXTERIOR		EXTERIOR	5	26 Watt Compact Fluorescent Fixture	26	0.130	281	5	Re-Lamp with (1) 10 Watt LED A19	10	0.050	108
MORAINE PARK	PLEASANT VALLEY BEACH CONCESSION STAND	38	EXTERIOR		EXTERIOR	2	26 Watt Compact Fluorescent Fixture	26	0.052	112	2	Re-Lamp with (1) 10 Watt LED A19	10	0.020	43
MORAINE PARK	POINT LIFT STATION GENERATOR	3	INTERIOR		MECHANICAL	2	100 Watt Jelly Jar Fixture; Damaged	100	0.200	520	2	New 18 Watt LED A21 Jelly Jar Fixture	15	0.030	78
MORAINE PARK	POINT LIFT STATION GENERATOR	3	EXTERIOR		EXTERIOR	1	175 Watt Mercury Vapor Dusk to Dawn Fixture	210	0.210	920	1	New 26 Watt LED Dusk to Dawn Barnyard Fixture	26	0.026	114
MORAINE PARK	PLEASANT VALLEY CHANGE HOUSE-PV BEACH WEST	41	INTERIOR		MEN DRESSING ROOM	3	26 Watt Compact Fluorescent Fixture	26	0.078	357	3	Re-Lamp with (1) 10 Watt LED A19	10	0.030	137
MORAINE PARK	PLEASANT VALLEY CHANGE HOUSE-PV BEACH WEST	41	INTERIOR		WOMEN DRESSING ROOM	3	26 Watt Compact Fluorescent Fixture	26	0.078	357	3	Re-Lamp with (1) 10 Watt LED A19	10	0.030	137
MORAINE PARK	PLEASANT VALLEY CHANGE HOUSE-PV BEACH WEST	41	EXTERIOR		EXTERIOR	1	13 Watt Compact Fluorescent Fixture	13	0.013	28	1	Re-Lamp with (1) 10 Watt LED A19	10	0.010	22
MORAINE PARK	PLEASANT VALLEY BEACH RESTROOM WEST COMFORT STATION	33	INTERIOR		WOMENS RESTROOM	2	26 Watt Compact Fluorescent Fixture	26	0.052	144	2	Re-Lamp with (1) 10 Watt LED A19	10	0.020	55
MORAINE PARK	PLEASANT VALLEY BEACH RESTROOM WEST COMFORT STATION	33	INTERIOR		MENS RESTROOM	2	26 Watt Compact Fluorescent Fixture	26	0.052	144	2	Re-Lamp with (1) 10 Watt LED A19	10	0.020	55
MORAINE PARK	PLEASANT VALLEY BEACH RESTROOM WEST COMFORT STATION	33	EXTERIOR		SOFFIT	2	26 Watt Compact Fluorescent Fixture	26	0.052	150	2	Re-Lamp with (1) 10 Watt LED A19	10	0.020	58
MORAINE PARK	PLEASANT VALLEY BEACH RESTROOM WEST COMFORT STATION	33	EXTERIOR		SOFFIT	5	90 Watt Incandescent PAR38 Fixture	90	0.450	1,296	5	Re-Lamp with (1) 17 Watt LED PAR38	17	0.085	245
MORAINE PARK	PLEASANT VALLEY BEACH RESTROOM WEST COMFORT STATION	33	INTERIOR		MECHANICAL	1	26 Watt Compact Fluorescent Fixture	26	0.026	72	1	Re-Lamp with (1) 10 Watt LED A19	10	0.010	28
MORAINE PARK	PLEASANT VALLEY RESTROOM	34	INTERIOR		MENS RESTROOM	2	26 Watt Compact Fluorescent Fixture	26	0.052	144	2	Re-Lamp with (1) 10 Watt LED A19	10	0.020	55
MORAINE PARK	PLEASANT VALLEY RESTROOM	34	INTERIOR		WOMENS RESTROOM	2	26 Watt Compact Fluorescent Fixture	26	0.052	144	2	Re-Lamp with (1) 10 Watt LED A19	10	0.020	55
MORAINE PARK	PLEASANT VALLEY RESTROOM	34	INTERIOR		MECHANICAL	1	Existing LED Fixture; No Retrofit	10	0.010	10	1	No Retrofit	10	0.010	10
MORAINE PARK	PLEASANT VALLEY MAINTENANCE BUILDING	28	INTERIOR		REPAIR BAY	3	T12 1x4 4-Lamp Wrap Fixture; Damaged	144	0.432	1,124	3	New 1x8 2-Lamp Wrap Fixture with (4) 12.5 Watt LED T8 4' Lamps; Direct Wire to Socket	50	0.150	390
MORAINE PARK	PLEASANT VALLEY MAINTENANCE BUILDING	28	INTERIOR		REPAIR BAY	2	13 Watt Compact Fluorescent Fixture	13	0.026	68	2	Re-Lamp with (1) 10 Watt LED A19	10	0.020	52

©2013 Energy Systems Group, LLC

EXISTING FIXTURES												PROPOSED FIXTURE UPGRADE				
Park/Building Name	Building	Building #	Phase	Floor	Room Description	Qty	Description	Watts	kW	kWh	Qty	Description	Watts	kW	kWh
MORAINE PARK	PLEASANT VALLEY MAINTENANCE BUILDING	28	INTERIOR		REPAIR BAY	3	T8 1x4 2-Lamp Vaportight Fixture	62	0.186	484	3	Retrofit with (2) 12.5 Watt LED T8 4' Lamps; Direct Wire to Socket	25	0.075	195
MORAINE PARK	PLEASANT VALLEY MAINTENANCE BUILDING	28	INTERIOR		MEZZANINE	3	T8 1x4 2-Lamp Wrap Fixture	62	0.186	484	3	Retrofit with (2) 12.5 Watt LED T8 4' Lamps; Direct Wire to Socket	25	0.075	195
MORAINE PARK	PLEASANT VALLEY MAINTENANCE BUILDING	28	INTERIOR		REPAIR BAY	7	Existing LED Fixture; No Retrofit	30	0.210	546	7	No Retrofit	30	0.210	546
MORAINE PARK	PLEASANT VALLEY MAINTENANCE BUILDING	28	INTERIOR		RESTROOM	1	13 Watt Compact Fluorescent 2-Lamp Fixture	26	0.026	14	1	New 1x2 2-Lamp Vanity Fixture with (2) 10 Watt LED 2' Lamps; Direct Wire to Socket	14	0.014	7
MORAINE PARK	PLEASANT VALLEY MAINTENANCE BUILDING	28	INTERIOR		OFFICE	2	T8 1x4 2-Lamp Wrap Fixture	62	0.124	323	2	Retrofit with (2) 12.5 Watt LED T8 4' Lamps; Direct Wire to Socket	25	0.050	130
MORAINE PARK	PLEASANT VALLEY MAINTENANCE BUILDING	28	INTERIOR		OFFICE CLOSET	1	26 Watt Compact Fluorescent Fixture	26	0.026	26	1	Re-Lamp with (1) 10 Watt LED A19	10	0.010	10
MORAINE PARK	PLEASANT VALLEY MAINTENANCE BUILDING	28	INTERIOR		PAINT ROOM	2	26 Watt Compact Fluorescent Fixture	26	0.052	135	2	Re-Lamp with (1) 10 Watt LED A19	10	0.020	52
MORAINE PARK	PLEASANT VALLEY MAINTENANCE BUILDING	28	INTERIOR		PAINT ROOM	1	200 Watt Incandescent A-Lamp Fixture	200	0.200	520	1	Re-Lamp with (1) 18 Watt LED A21	18	0.018	47
MORAINE PARK	PLEASANT VALLEY MAINTENANCE BUILDING	28	INTERIOR		LUNCH ROOM	2	Existing LED Fixture; No Retrofit	10	0.020	52	2	No Retrofit	10	0.020	52
MORAINE PARK	PLEASANT VALLEY MAINTENANCE BUILDING	28	INTERIOR		LUNCH ROOM	3	Existing LED Fixture; No Retrofit	40	0.120	312	3	No Retrofit	40	0.120	312
MORAINE PARK	PLEASANT VALLEY BEACH RESTROOM EAST	39	INTERIOR		MENS RESTROOM	2	26 Watt Compact Fluorescent Fixture	26	0.052	144	2	Re-Lamp with (1) 10 Watt LED A19	10	0.020	55
MORAINE PARK	PLEASANT VALLEY BEACH RESTROOM EAST	39	INTERIOR		WOMENS RESTROOM	2	26 Watt Compact Fluorescent Fixture	26	0.052	144	2	Re-Lamp with (1) 10 Watt LED A19	10	0.020	55
MORAINE PARK	PLEASANT VALLEY BEACH RESTROOM EAST	39	EXTERIOR		SOFFIT	2	26 Watt Compact Fluorescent Fixture	26	0.052	150	2	Re-Lamp with (1) 10 Watt LED A19	10	0.020	58
MORAINE PARK	PLEASANT VALLEY ROAD - THE GREEN HOUSE RESIDENCE	24	INTERIOR		KITCHEN	1	Existing LED Fixture; No Retrofit	20	0.020	74	1	No Retrofit	20	0.020	74
MORAINE PARK	PLEASANT VALLEY ROAD - THE GREEN HOUSE RESIDENCE	24	INTERIOR		KITCHEN	1	Existing LED Fixture; No Retrofit	20	0.020	74	1	No Retrofit	20	0.020	74
MORAINE PARK	PLEASANT VALLEY ROAD - THE GREEN HOUSE RESIDENCE	24	INTERIOR		LIVING ROOM	1	13 Watt Compact Fluorescent 2-Lamp Fixture	26	0.026	96	1	Re-Lamp with (2) 10 Watt LED A19	20	0.020	74
MORAINE PARK	PLEASANT VALLEY ROAD - THE GREEN HOUSE RESIDENCE	24	INTERIOR		HALLWAY	1	Existing LED Fixture; No Retrofit	10	0.010	37	1	No Retrofit	10	0.010	37
MORAINE PARK	PLEASANT VALLEY ROAD - THE GREEN HOUSE RESIDENCE	24	INTERIOR		BEDROOM	1	Existing LED Fixture; No Retrofit	30	0.030	111	1	No Retrofit	30	0.030	111
MORAINE PARK	PLEASANT VALLEY ROAD - THE GREEN HOUSE RESIDENCE	24	INTERIOR		BEDROOM CLOSET	1	Existing LED Fixture; No Retrofit	10	0.010	10	1	No Retrofit	10	0.010	10
MORAINE PARK	PLEASANT VALLEY ROAD - THE GREEN HOUSE RESIDENCE	24	INTERIOR		BEDROOM	1	Existing LED Fixture; No Retrofit	20	0.020	74	1	No Retrofit	20	0.020	74
MORAINE PARK	PLEASANT VALLEY ROAD - THE GREEN HOUSE RESIDENCE	24	INTERIOR		RESTROOM	3	65 Watt Incandescent R30 Downlight Fixture	65	0.195	722	3	Re-Lamp with (1) 10 Watt LED BR30	10	0.030	111
MORAINE PARK	PLEASANT VALLEY ROAD - THE GREEN HOUSE RESIDENCE	24	INTERIOR		BEDROOM	1	Existing LED Fixture; No Retrofit	30	0.030	111	1	No Retrofit	30	0.030	111
MORAINE PARK	PLEASANT VALLEY ROAD - THE GREEN HOUSE RESIDENCE	24	INTERIOR		BEDROOM CLOSET	1	Existing LED Fixture; No Retrofit	10	0.010	10	1	No Retrofit	10	0.010	10
MORAINE PARK	PLEASANT VALLEY ROAD - THE GREEN HOUSE RESIDENCE	24	INTERIOR		BASEMENT	1	13 Watt Compact Fluorescent Fixture	13	0.013	48	1	Re-Lamp with (1) 10 Watt LED A19	10	0.010	37
MORAINE PARK	PLEASANT VALLEY ROAD - THE GREEN HOUSE RESIDENCE	24	INTERIOR		BASEMENT	1	Circline Fixture; No Retrofit	30	0.030	111	1	No Retrofit	30	0.030	111
MORAINE PARK	PLEASANT VALLEY ROAD - THE GREEN HOUSE RESIDENCE	24	INTERIOR		BASEMENT	2	Existing LED Fixture; No Retrofit	10	0.020	74	2	No Retrofit	10	0.020	74

©2013 Energy Systems Group, LLC

EXISTING FIXTURES											PROPOSED FIXTURE UPGRADE				
Park/Building Name	Building	Building #	Phase	Floor	Room Description	Qty	Description	Watts	kW	kWh	Qty	Description	Watts	kW	kWh
MORAINE PARK	PLEASANT VALLEY ROAD - THE GREEN HOUSE RESIDENCE	24	EXTERIOR		EXTERIOR	1	26 Watt Compact Fluorescent Fixture	26	0.026	114	1	Re-Lamp with (1) 10 Watt LED A19	10	0.010	44
MORAINE PARK	PLEASANT VALLEY ROAD - THE GREEN HOUSE RESIDENCE	24	EXTERIOR		EXTERIOR	1	75 Watt Incandescent A-Lamp Fixture	75	0.075	329	1	Re-Lamp with (1) 10 Watt LED A19	10	0.010	44
MORAINE PARK	PLEASANT VALLEY ROAD - THE GREEN HOUSE RESIDENCE	24	EXTERIOR		EXTERIOR	1	175 Watt Mercury Vapor Dusk to Dawn Fixture	210	0.210	920	1	New 26 Watt LED Dusk to Dawn Barnyard Fixture	26	0.026	114
MORAINE PARK	PLEASANT VALLEY ROAD - THE GREEN HOUSE RESIDENCE	24	INTERIOR		GARAGE	2	26 Watt Compact Fluorescent Fixture	26	0.052	52	2	Re-Lamp with (1) 10 Watt LED A19	10	0.020	20
MORAINE PARK	PLEASANT VALLEY ROAD - THE GREEN HOUSE RESIDENCE	24	EXTERIOR		GARAGE	1	90 Watt Incandescent PAR38 Fixture	90	0.090	394	1	Re-Lamp with (1) 17 Watt LED PAR38	17	0.017	74
MORAINE PARK	CABIN 11	110	INTERIOR		LIVING ROOM	1	18 Watt Compact Fluorescent Fixture	18	0.018	67	1	Re-Lamp with (1) 10 Watt LED A19	10	0.010	37
MORAINE PARK	CABIN 11	110	INTERIOR		KITCHEN SINK	1	1-Lamp F15; No Retrofit	15	0.015	56	1	No Retrofit	15	0.015	56
MORAINE PARK	CABIN 11	110	INTERIOR		DINING	1	26 Watt Compact Fluorescent 5-Lamp Fixture	130	0.130	482	1	Re-Lamp with (5) 10 Watt LED A19	50	0.050	185
MORAINE PARK	CABIN 11	110	INTERIOR		HALLWAY	1	26 Watt Compact Fluorescent 2-Lamp Fixture	52	0.052	193	1	Re-Lamp with (2) 10 Watt LED A19	20	0.020	74
MORAINE PARK	CABIN 11	110	INTERIOR		BEDROOM	1	26 Watt Compact Fluorescent 2-Lamp Fixture	52	0.052	193	1	Re-Lamp with (2) 10 Watt LED A19	20	0.020	74
MORAINE PARK	CABIN 11	110	INTERIOR		BEDROOM	1	26 Watt Compact Fluorescent 2-Lamp Fixture	52	0.052	193	1	Re-Lamp with (2) 10 Watt LED A19	20	0.020	74
MORAINE PARK	CABIN 11	110	INTERIOR		RESTROOM	1	26 Watt Compact Fluorescent 3-Lamp Fixture	78	0.078	289	1	Re-Lamp with (3) 10 Watt LED A19	30	0.030	111
MORAINE PARK	CABIN 11	110	INTERIOR		RESTROOM	1	18 Watt Compact Fluorescent Fixture	18	0.018	67	1	Re-Lamp with (1) 10 Watt LED A19	10	0.010	37
MORAINE PARK	CABIN 11	110	EXTERIOR		PORCH	1	26 Watt Compact Fluorescent Canopy Fixture	26	0.026	114	1	New 10 Watt LED Canopy Fixture	12	0.012	53
MORAINE PARK	CABIN 11	110	INTERIOR		TABLE LAMPS	4	13 Watt Compact Fluorescent Fixture	13	0.052	193	4	Re-Lamp with (1) 10 Watt LED A19	10	0.040	148
MORAINE PARK	SNYDER ASSISTANT MANAGER RESIDENCE	62	INTERIOR	1	BACK ROOM	1	40 Watt Incandescent 2-Lamp Fixture	80	0.080	296	1	Re-Lamp with (2) 7 Watt LED A19	14	0.014	52
MORAINE PARK	SNYDER ASSISTANT MANAGER RESIDENCE	62	INTERIOR	1	BACK ROOM	1	60 Watt Incandescent A-Lamp Fixture	60	0.060	222	1	Re-Lamp with (1) 10 Watt LED A19	10	0.010	37
MORAINE PARK	SNYDER ASSISTANT MANAGER RESIDENCE	62	INTERIOR	1	KITCHEN	1	T12 2x2 2-Lamp U-Lamp Troffer Fixture with 6" Lamps	72	0.072	267	1	Retrofit with (2) 10 Watt LED T8 2' Lamps and (1) 2x2 2-Lamp White Reflector Kit; Direct Wire to Socket	20	0.020	74
MORAINE PARK	SNYDER ASSISTANT MANAGER RESIDENCE	62	INTERIOR	1	KITCHEN	1	T12 2x2 2-Lamp U-Lamp Troffer Fixture with 6" Lamps	72	0.072	267	1	Retrofit with (2) 10 Watt LED T8 2' Lamps and (1) 2x2 2-Lamp White Reflector Kit; Direct Wire to Socket	20	0.020	74
MORAINE PARK	SNYDER ASSISTANT MANAGER RESIDENCE	62	INTERIOR	1	LIVING ROOM	2	60 Watt Incandescent A-Lamp Fixture	60	0.120	444	2	Re-Lamp with (1) 10 Watt LED A19	10	0.020	74
MORAINE PARK	SNYDER ASSISTANT MANAGER RESIDENCE	62	INTERIOR	1	HALLWAY	1	60 Watt Incandescent A-Lamp Fixture	60	0.060	222	1	Re-Lamp with (1) 10 Watt LED A19	10	0.010	37
MORAINE PARK	SNYDER ASSISTANT MANAGER RESIDENCE	62	INTERIOR	1	BEDROOM	3	60 Watt Incandescent 3-Lamp Fixture	180	0.540	2,000	3	Re-Lamp with (3) 10 Watt LED A19	30	0.090	333
MORAINE PARK	SNYDER ASSISTANT MANAGER RESIDENCE	62	INTERIOR	1	RESTROOM	1	25 Watt Incandescent 2-Lamp A-Lamp	50	0.050	185	1	Re-Lamp with (2) 7 Watt LED A19	14	0.014	52
MORAINE PARK	SNYDER ASSISTANT MANAGER RESIDENCE	62	INTERIOR	1	SHOWER	1	60 Watt Incandescent A-Lamp Fixture	60	0.060	222	1	Re-Lamp with (1) 10 Watt LED A19	10	0.010	37
MORAINE PARK	SNYDER ASSISTANT MANAGER RESIDENCE	62	INTERIOR	1	BEDROOM	1	60 Watt Incandescent A-Lamp Fixture	60	0.060	222	1	Re-Lamp with (1) 10 Watt LED A19	10	0.010	37
MORAINE PARK	SNYDER ASSISTANT MANAGER RESIDENCE	62	INTERIOR	2	HALLWAY	2	13 Watt Compact Fluorescent Fixture	13	0.026	96	2	Re-Lamp with (1) 10 Watt LED A19	10	0.020	74

©2013 Energy Systems Group, LLC

EXISTING FIXTURES												PROPOSED FIXTURE UPGRADE				
Park/Building Name	Building	Building #	Phase	Floor	Room Description	Qty	Description	Watts	kW	kWh	Qty	Description	Watts	kW	kWh
MORAINE PARK	SNYDER ASSISTANT MANAGER RESIDENCE	62	INTERIOR	2	CLOSET	2	26 Watt Compact Fluorescent Fixture	26	0.052	52	2	Re-Lamp with (1) 10 Watt LED A19	10	0.020	20
MORAINE PARK	SNYDER ASSISTANT MANAGER RESIDENCE	62	INTERIOR	2	BEDROOM	1	60 Watt Incandescent A-Lamp Fixture	60	0.060	222	1	Re-Lamp with (1) 10 Watt LED A19	10	0.010	37
MORAINE PARK	SNYDER ASSISTANT MANAGER RESIDENCE	62	INTERIOR	2	RESTROOM	2	60 Watt Incandescent A-Lamp Fixture	60	0.120	444	2	Re-Lamp with (1) 10 Watt LED A19	10	0.020	74
MORAINE PARK	SNYDER ASSISTANT MANAGER RESIDENCE	62	INTERIOR	2	RESTROOM	1	60 Watt Incandescent A-Lamp Fixture	60	0.060	222	1	Re-Lamp with (1) 10 Watt LED A19	10	0.010	37
MORAINE PARK	SNYDER ASSISTANT MANAGER RESIDENCE	62	INTERIOR	2	CLOSET	1	18 Watt Compact Fluorescent Fixture	18	0.018	18	1	Re-Lamp with (1) 10 Watt LED A19	10	0.010	10
MORAINE PARK	SNYDER ASSISTANT MANAGER RESIDENCE	62	INTERIOR	2	CLOSET	2	26 Watt Compact Fluorescent Fixture	26	0.052	52	2	Re-Lamp with (1) 10 Watt LED A19	10	0.020	20
MORAINE PARK	SNYDER ASSISTANT MANAGER RESIDENCE	62	INTERIOR	B	BASEMENT	3	Existing LED Fixture; No Retrofit	10	0.030	111	3	No Retrofit	10	0.030	111
MORAINE PARK	SNYDER ASSISTANT MANAGER RESIDENCE	62	INTERIOR	B	BASEMENT	1	60 Watt Incandescent A-Lamp Fixture	60	0.060	222	1	Re-Lamp with (1) 10 Watt LED A19	10	0.010	37
MORAINE PARK	SNYDER ASSISTANT MANAGER RESIDENCE	62	INTERIOR	B	BASEMENT	2	T12 1x4 2-Lamp Industrial Strip Fixture	72	0.144	533	2	Retrofit with (2) 12.5 Watt LED T8 4' Lamps; Direct Wire to Socket	25	0.050	185
MORAINE PARK	SNYDER ASSISTANT MANAGER RESIDENCE	62	EXTERIOR		EXTERIOR	1	150 Watt Quartz 2-Head Flood Fixture	300	0.300	1,314	1	(2) New 26 Watt LED Flood Fixtures	52	0.052	228
MORAINE PARK	SNYDER ASSISTANT MANAGER RESIDENCE	62	EXTERIOR		EXTERIOR	2	13 Watt Compact Fluorescent Fixture	13	0.026	114	2	Re-Lamp with (1) 10 Watt LED A19	10	0.020	88
MORAINE PARK	GARAGE	71	INTERIOR		GARAGE	3	T8HO 1x4 2-Lamp Strip Fixture	93	0.279	279	3	New 40 Watt LED Canopy Fixture	38	0.114	114
MORAINE PARK	GARAGE	71	EXTERIOR		GARAGE	1	90 Watt Incandescent PAR38 2-Lamp Fixture	180	0.180	788	1	Re-Lamp with (2) 17 Watt LED PAR38	34	0.034	149
MORAINE PARK	BEAR RUN BOAT LAUNCH RESTROOM COMFORT STATION	51	INTERIOR		MENS RESTROOM	1	T12 1x4 2-Lamp V Vaportight Fixture	72	0.072	199	1	Retrofit with (2) 12.5 Watt LED T8 4' Lamps; Direct Wire to Socket	25	0.025	69
MORAINE PARK	BEAR RUN BOAT LAUNCH RESTROOM COMFORT STATION	51	INTERIOR		MENS RESTROOM	1	T8 1x4 2-Lamp Vaportight Fixture	62	0.062	171	1	Retrofit with (2) 12.5 Watt LED T8 4' Lamps; Direct Wire to Socket	25	0.025	69
MORAINE PARK	BEAR RUN BOAT LAUNCH RESTROOM COMFORT STATION	51	INTERIOR		MECHANICAL	1	13 Watt Compact Fluorescent Fixture	13	0.013	36	1	Re-Lamp with (1) 10 Watt LED A19	10	0.010	28
MORAINE PARK	BEAR RUN BOAT LAUNCH RESTROOM COMFORT STATION	51	INTERIOR		WOMENS RESTROOM	2	T12 1x4 2-Lamp Vaportight Fixture	72	0.144	397	2	Retrofit with (2) 12.5 Watt LED T8 4' Lamps; Direct Wire to Socket	25	0.050	138
MORAINE PARK	BEAR RUN BOAT LAUNCH RESTROOM COMFORT STATION	51	EXTERIOR		EXTERIOR	1	26 Watt Compact Fluorescent Canopy Fixture	26	0.026	75	1	New 10 Watt LED Canopy Fixture	12	0.012	35
MORAINE PARK	BEAR RUN BOAT LAUNCH RESTROOM COMFORT STATION	51	EXTERIOR		EXTERIOR	2	26 Watt Compact Fluorescent Fixture	26	0.052	150	2	Re-Lamp with (1) 10 Watt LED A19	10	0.020	58
MORAINE PARK	BEAR RUN BOAT LAUNCH RESTROOM COMFORT STATION	51	EXTERIOR		EXTERIOR	1	175 Watt Mercury Vapor Dusk to Dawn Fixture	210	0.210	605	1	New 26 Watt LED Dusk to Dawn Barnyard Fixture	26	0.026	75
MORAINE PARK	LAKEVIEW LIFE GUARD BUILDING	79	INTERIOR		OFFICE	6	T12 1x4 2-Lamp Wrap Fixture	72	0.432	1,192	6	Retrofit with (2) 12.5 Watt LED T8 4' Lamps; Direct Wire to Socket	25	0.150	414
MORAINE PARK	LAKEVIEW LIFE GUARD BUILDING	79	INTERIOR		RESTROOM	1	60 Watt Incandescent A-Lamp Fixture	60	0.060	166	1	Re-Lamp with (1) 10 Watt LED A19	10	0.010	28
MORAINE PARK	LAKEVIEW LIFE GUARD BUILDING	79	INTERIOR		STORAGE	2	T12 1x4 2-Lamp Wrap Fixture	72	0.144	144	2	Retrofit with (2) 12.5 Watt LED T8 4' Lamps; Direct Wire to Socket	25	0.050	50
MORAINE PARK	LAKEVIEW LIFE GUARD BUILDING	79	INTERIOR		STORAGE	4	T12 1x4 2-Lamp Wrap Fixture	72	0.288	288	4	Retrofit with (2) 12.5 Watt LED T8 4' Lamps; Direct Wire to Socket	25	0.100	100
MORAINE PARK	LAKEVIEW LIFE GUARD BUILDING	79	INTERIOR		STORAGE	1	T12 1x4 2-Lamp Wrap Fixture	72	0.072	72	1	Retrofit with (2) 12.5 Watt LED T8 4' Lamps; Direct Wire to Socket	25	0.025	25
MORAINE PARK	LAKEVIEW LIFE GUARD BUILDING	79	EXTERIOR		EXTERIOR	3	26 Watt Compact Fluorescent Wall Pack	26	0.078	168	3	New 24 Watt LED Wall Pack Fixture; Non-Dark Sky	25	0.075	162

©2013 Energy Systems Group, LLC

EXISTING FIXTURES												PROPOSED FIXTURE UPGRADE				
Park/Building Name	Building	Building #	Phase	Floor	Room Description	Qty	Description	Watts	kW	kWh	Qty	Description	Watts	kW	kWh
MORAINE PARK	DAVIS HOLLOW DOCK HOUSE MARINA	104	INTERIOR		BOAT HOUSE	2	T12 2x4 4-Lamp Troffer Fixture	144	0.288	795	2	Retrofit with (4) 12.5 Watt LED T8 4' Lamps; Direct Wire to Socket	50	0.100	276
MORAINE PARK	DAVIS HOLLOW DOCK HOUSE MARINA	104	EXTERIOR		EXTERIOR	2	90 Watt Incandescent PAR38 2-Lamp Fixture	180	0.360	778	2	Re-Lamp with (2) 17 Watt LED PAR38	34	0.068	147
MORAINE PARK	BEAR RUN GENERATOR 1	128	INTERIOR		GENERATOR	2	100 Watt Incandescent A-Lamp Jelly Jar Fixture	100	0.200	200	2	Re-Lamp with (1) 18 Watt LED A21	18	0.036	36
MORAINE PARK	BEAR RUN GENERATOR 1	128	EXTERIOR		GENERATOR	1	23 Watt Compact Fluorescent Jelly Jar	23	0.023	50	1	Re-Lamp with (1) 10 Watt LED A19	10	0.010	22
MORAINE PARK	REGIONAL PARK OFFICE 2	106	INTERIOR	1	OFFICE REKICH	3	Existing LED Fixture; No Retrofit	30	0.090	234	3	No Retrofit	30	0.090	234
MORAINE PARK	REGIONAL PARK OFFICE 2	106	INTERIOR	1	OFFICE REKICH	1	T12 2x4 2-Lamp Troffer Fixture	78	0.078	175	1	Retrofit with (2) 12.5 Watt LED T8 4' Lamps; Direct Wire to Socket	25	0.025	56
MORAINE PARK	REGIONAL PARK OFFICE 2	106	INTERIOR	1	OFFICE	4	Existing LED Fixture; No Retrofit	30	0.120	270	4	No Retrofit	30	0.120	270
MORAINE PARK	REGIONAL PARK OFFICE 2	106	INTERIOR	1	OFFICE	3	T12 2x4 2-Lamp Troffer Fixture	78	0.234	526	3	Retrofit with (2) 12.5 Watt LED T8 4' Lamps; Direct Wire to Socket	25	0.075	169
MORAINE PARK	REGIONAL PARK OFFICE 2	106	INTERIOR	1	OFFICE	1	Existing LED Fixture; No Retrofit	30	0.030	67	1	No Retrofit	30	0.030	67
MORAINE PARK	REGIONAL PARK OFFICE 2	106	INTERIOR	1	OFFICE	2	Existing LED Fixture; No Retrofit	30	0.060	135	2	No Retrofit	30	0.060	135
MORAINE PARK	REGIONAL PARK OFFICE 2	106	INTERIOR	1	OFFICE	2	T12 2x4 2-Lamp Troffer Fixture	78	0.156	351	2	Retrofit with (2) 12.5 Watt LED T8 4' Lamps; Direct Wire to Socket	25	0.050	112
MORAINE PARK	REGIONAL PARK OFFICE 2	106	INTERIOR	1	OFFICE	2	T12 2x4 2-Lamp Troffer Fixture	78	0.156	351	2	Retrofit with (2) 12.5 Watt LED T8 4' Lamps; Direct Wire to Socket	25	0.050	112
MORAINE PARK	REGIONAL PARK OFFICE 2	106	INTERIOR	1	OFFICE	2	Existing LED Fixture; No Retrofit	30	0.060	135	2	No Retrofit	30	0.060	135
MORAINE PARK	REGIONAL PARK OFFICE 2	106	INTERIOR	1	OFFICE	4	T12 2x4 2-Lamp Troffer Fixture	78	0.312	701	4	Retrofit with (2) 12.5 Watt LED T8 4' Lamps; Direct Wire to Socket	25	0.100	225
MORAINE PARK	REGIONAL PARK OFFICE 2	106	INTERIOR	1	OFFICE	4	T12 2x4 2-Lamp Surface Mount Fixture	78	0.312	701	4	Retrofit with (2) 12.5 Watt LED T8 4' Lamps; Direct Wire to Socket	25	0.100	225
MORAINE PARK	REGIONAL PARK OFFICE 2	106	INTERIOR	1	OFFICE	3	T12 2x4 2-Lamp Surface Mount Fixture	78	0.234	526	3	Retrofit with (2) 12.5 Watt LED T8 4' Lamps; Direct Wire to Socket	25	0.075	169
MORAINE PARK	REGIONAL PARK OFFICE 2	106	INTERIOR	1	OFFICE	1	Existing LED Fixture; No Retrofit	30	0.030	67	1	No Retrofit	30	0.030	67
MORAINE PARK	REGIONAL PARK OFFICE 2	106	INTERIOR	1	COPY ROOM	4	T12 2x4 2-Lamp Surface Mount Fixture	78	0.312	701	4	Retrofit with (2) 12.5 Watt LED T8 4' Lamps; Direct Wire to Socket	25	0.100	225
MORAINE PARK	REGIONAL PARK OFFICE 2	106	INTERIOR	1	OFFICE	4	T12 2x4 2-Lamp Surface Mount Fixture	78	0.312	701	4	Retrofit with (2) 12.5 Watt LED T8 4' Lamps; Direct Wire to Socket	25	0.100	225
MORAINE PARK	REGIONAL PARK OFFICE 2	106	INTERIOR	1	OFFICE	2	T12 2x4 2-Lamp Surface Mount Fixture	78	0.156	351	2	Retrofit with (2) 12.5 Watt LED T8 4' Lamps; Direct Wire to Socket	25	0.050	112
MORAINE PARK	REGIONAL PARK OFFICE 2	106	INTERIOR	1	OFFICE	2	Existing LED Fixture; No Retrofit	30	0.060	135	2	No Retrofit	30	0.060	135
MORAINE PARK	REGIONAL PARK OFFICE 2	106	INTERIOR	1	HALL LOBBY	7	T12 2x2 2-Lamp U-Lamp Troffer Fixture with 6' Lamps	72	0.504	1,133	7	Retrofit with (2) 10 Watt LED T8 2' Lamps and (1) 2x2 2-Lamp White Reflector Kit; Direct Wire to Socket	20	0.140	315
MORAINE PARK	REGIONAL PARK OFFICE 2	106	INTERIOR	1	OFFICE	4	T12 2x4 2-Lamp Troffer Fixture	78	0.312	701	4	Retrofit with (2) 12.5 Watt LED T8 4' Lamps; Direct Wire to Socket	25	0.100	225
MORAINE PARK	REGIONAL PARK OFFICE 2	106	INTERIOR	1	OFFICE	4	T12 2x4 2-Lamp Troffer Fixture	78	0.312	701	4	Retrofit with (2) 12.5 Watt LED T8 4' Lamps; Direct Wire to Socket	25	0.100	225
MORAINE PARK	REGIONAL PARK OFFICE 2	106	INTERIOR	1	LOBBY	4	T12 1x4 4-Lamp Direct/Indirect Fixture	144	0.576	1,295	4	Retrofit with (4) 12.5 Watt LED T8 4' Lamps; Direct Wire to Socket	50	0.200	450
MORAINE PARK	REGIONAL PARK OFFICE 2	106	INTERIOR	1	OFFICE	3	T12 2x4 2-Lamp Troffer Fixture	78	0.234	526	3	Retrofit with (2) 12.5 Watt LED T8 4' Lamps; Direct Wire to Socket	25	0.075	169

©2013 Energy Systems Group, LLC

EXISTING FIXTURES												PROPOSED FIXTURE UPGRADE				
Park/Building Name	Building	Building #	Phase	Floor	Room Description	Qty	Description	Watts	kW	kWh	Qty	Description	Watts	kW	kWh
MORAINE PARK	REGIONAL PARK OFFICE 2	106	INTERIOR	1	OFFICE	1	Existing LED Fixture; No Retrofit	30	0.030	67	1	No Retrofit	30	0.030	67
MORAINE PARK	REGIONAL PARK OFFICE 2	106	INTERIOR	1	OFFICE	4	T12 2x4 2-Lamp Troffer Fixture	78	0.312	701	4	Retrofit with (2) 12.5 Watt LED T8 4' Lamps; Direct Wire to Socket	25	0.100	225
MORAINE PARK	REGIONAL PARK OFFICE 2	106	INTERIOR	1	OFFICE	4	T12 2x4 2-Lamp Troffer Fixture	78	0.312	701	4	Retrofit with (2) 12.5 Watt LED T8 4' Lamps; Direct Wire to Socket	25	0.100	225
MORAINE PARK	REGIONAL PARK OFFICE 2	106	INTERIOR	1	WOMENS RESTROOM	1	T12 2x4 2-Lamp Troffer Fixture	78	0.078	41	1	Retrofit with (2) 12.5 Watt LED T8 4' Lamps; Direct Wire to Socket	25	0.025	13
MORAINE PARK	REGIONAL PARK OFFICE 2	106	INTERIOR	1	MENS RESTROOM	1	T12 2x4 2-Lamp Troffer Fixture	78	0.078	41	1	Retrofit with (2) 12.5 Watt LED T8 4' Lamps; Direct Wire to Socket	25	0.025	13
MORAINE PARK	REGIONAL PARK OFFICE 2	106	INTERIOR	1	OFFICE	4	T12 2x4 2-Lamp Troffer Fixture	78	0.312	701	4	Retrofit with (2) 12.5 Watt LED T8 4' Lamps; Direct Wire to Socket	25	0.100	225
MORAINE PARK	REGIONAL PARK OFFICE 2	106	INTERIOR	1	OFFICE	4	Existing LED Fixture; No Retrofit	30	0.120	270	4	No Retrofit	30	0.120	270
MORAINE PARK	REGIONAL PARK OFFICE 2	106	INTERIOR	1	OFFICE	4	T12 2x4 2-Lamp Troffer Fixture	78	0.312	701	4	Retrofit with (2) 12.5 Watt LED T8 4' Lamps; Direct Wire to Socket	25	0.100	225
MORAINE PARK	REGIONAL PARK OFFICE 2	106	INTERIOR	1	OFFICE	4	T12 2x4 2-Lamp Troffer Fixture	78	0.312	701	4	Retrofit with (2) 12.5 Watt LED T8 4' Lamps; Direct Wire to Socket	25	0.100	225
MORAINE PARK	REGIONAL PARK OFFICE 2	106	INTERIOR	1	HALLWAY	5	T12 2x4 2-Lamp Surface Mount Fixture	78	0.390	877	5	Retrofit with (2) 12.5 Watt LED T8 4' Lamps; Direct Wire to Socket	25	0.125	281
MORAINE PARK	REGIONAL PARK OFFICE 2	106	INTERIOR	1	STAIRS	1	13 Watt Plug-In CFL Drum Fixture	26	0.026	58	1	No Retrofit	26	0.026	58
MORAINE PARK	REGIONAL PARK OFFICE 2	106	INTERIOR	1	STAIRS	1	T12 1x4 2-Lamp Industrial Strip Fixture; Turret	72	0.072	162	1	New 1x4 2-Lamp Industrial Fixture with (2) 12.5 Watt LED T8 4' Lamp; Direct Wire to Socket	25	0.025	56
MORAINE PARK	REGIONAL PARK OFFICE 2	106	INTERIOR	B	MECHANICAL	2	T12 1x4 2-Lamp Industrial Strip Fixture; Turret	72	0.144	144	2	New 1x4 2-Lamp Industrial Fixture with (2) 12.5 Watt LED T8 4' Lamp; Direct Wire to Socket	25	0.050	50
MORAINE PARK	REGIONAL PARK OFFICE 2	106	INTERIOR	B	MEETING ROOM	18	T12 2x4 2-Lamp Troffer Fixture	78	1.404	3,156	18	Retrofit with (2) 12.5 Watt LED T8 4' Lamps; Direct Wire to Socket	25	0.450	1,012
MORAINE PARK	REGIONAL PARK OFFICE 2	106	INTERIOR	B	FILE/STORAGE	3	T12 1x4 2-Lamp Industrial Strip Fixture; Turret	72	0.216	486	3	New 1x4 2-Lamp Industrial Fixture with (2) 12.5 Watt LED T8 4' Lamp; Direct Wire to Socket	25	0.075	169
MORAINE PARK	REGIONAL PARK OFFICE 2	106	INTERIOR	B	FILE ROOM	2	T12 1x4 2-Lamp Industrial Strip Fixture; Turret	72	0.144	324	2	New 1x4 2-Lamp Industrial Fixture with (2) 12.5 Watt LED T8 4' Lamp; Direct Wire to Socket	25	0.050	112
MORAINE PARK	REGIONAL PARK OFFICE 2	106	INTERIOR	B	KITCHEN	7	T12 1x4 2-Lamp Industrial Strip Fixture; Turret	72	0.504	1,133	7	New 1x4 2-Lamp Industrial Fixture with (2) 12.5 Watt LED T8 4' Lamp; Direct Wire to Socket	25	0.175	393
MORAINE PARK	REGIONAL PARK OFFICE 2	106	INTERIOR	B	KITCHEN	1	Existing LED Fixture; No Retrofit	30	0.030	67	1	No Retrofit	30	0.030	67
MORAINE PARK	REGIONAL PARK OFFICE 2	106	INTERIOR	B	RESTROOM	1	T12 1x3 2-Lamp Vanity Fixture; Damaged	73	0.073	164	1	New 1x3 2-Lamp Vanity Fixture with (2) 12 Watt LED T8 3' Lamps; Direct Wire to Socket	24	0.024	54
MORAINE PARK	REGIONAL PARK OFFICE 2	106	INTERIOR	B	STORAGE	1	T12 1x4 2-Lamp Industrial Strip Fixture; Turret	72	0.072	72	1	New 1x4 2-Lamp Industrial Fixture with (2) 12.5 Watt LED T8 4' Lamp; Direct Wire to Socket	25	0.025	25
MORAINE PARK	REGIONAL PARK OFFICE 2	106	INTERIOR	B	HALLWAY	3	T12 1x4 2-Lamp Industrial Strip Fixture; Turret	72	0.216	486	3	New 1x4 2-Lamp Industrial Fixture with (2) 12.5 Watt LED T8 4' Lamp; Direct Wire to Socket	25	0.075	169
MORAINE PARK	REGIONAL PARK OFFICE 2	106	INTERIOR	B	RESTROOM	1	T12 2x2 2-Lamp Vanity Fixture	42	0.042	22	1	Retrofit with (2) 10 Watt LED T8 2' Lamps; Direct Wire to Socket	20	0.020	10
MORAINE PARK	REGIONAL PARK OFFICE 2	106	INTERIOR	B	RESTROOM	1	250 Watt Incandescent R40 Heat Lamp; No Retrofit	250	0.250	131	1	No Retrofit	250	0.250	131
MORAINE PARK	REGIONAL PARK OFFICE 2	106	INTERIOR	B	STORAGE	3	Existing LED Fixture; No Retrofit	30	0.090	90	3	No Retrofit	30	0.090	90
MORAINE PARK	REGIONAL PARK OFFICE 2	106	INTERIOR	B	STORAGE	6	T12 1x4 2-Lamp Industrial Strip Fixture; Turret	72	0.432	432	6	New 1x4 2-Lamp Industrial Fixture with (2) 12.5 Watt LED T8 4' Lamp; Direct Wire to Socket	25	0.150	150
MORAINE PARK	REGIONAL PARK OFFICE 2	106	INTERIOR	B	STORAGE	2	T12 1x4 2-Lamp Industrial Strip Fixture; Turret	72	0.144	144	2	New 1x4 2-Lamp Industrial Fixture with (2) 12.5 Watt LED T8 4' Lamp; Direct Wire to Socket	25	0.050	50

©2013 Energy Systems Group, LLC

EXISTING FIXTURES											PROPOSED FIXTURE UPGRADE				
Park/Building Name	Building	Building #	Phase	Floor	Room Description	Qty	Description	Watts	kW	kWh	Qty	Description	Watts	kW	kWh
MORAINE PARK	REGIONAL PARK OFFICE 2	106	INTERIOR	B	STORAGE	4	T12 1x4 2-Lamp Industrial Strip Fixture	72	0.288	288	4	Retrofit with (2) 12.5 Watt LED T8 4' Lamps; Direct Wire to Socket	25	0.100	100
MORAINE PARK	REGIONAL PARK OFFICE 2	106	INTERIOR	B	STORAGE	1	100 Watt Incandescent A-Lamp Fixture	100	0.100	100	1	Re-Lamp with (1) 18 Watt LED A21	18	0.018	18
MORAINE PARK	REGIONAL PARK OFFICE 2	106	EXTERIOR		EXTERIOR	3	Existing LED Fixture; No Retrofit	40	0.120	259	3	No Retrofit	40	0.120	259
MORAINE PARK	REGIONAL PARK OFFICE 2	106	EXTERIOR		EXTERIOR	1	90 Watt Incandescent PAR38 Fixture	90	0.090	194	1	Re-Lamp with (1) 17 Watt LED PAR38	17	0.017	37
MORAINE PARK	REGIONAL PARK OFFICE 2	106	EXTERIOR		EXTERIOR	2	Existing LED Fixture; No Retrofit	10	0.020	43	2	No Retrofit	10	0.020	43
MORAINE PARK	REGIONAL PARK OFFICE 2	106	EXTERIOR		EXTERIOR	1	50 Watt High Pressure Sodium Recessed Fixture	70	0.070	151	1	Re-Lamp with (1) 19 Watt LED Omni-Cob Lamp; Hardwire Ballast	19	0.019	41
MORAINE PARK	REGIONAL PARK OFFICE 2	106	EXTERIOR		EXTERIOR	1	100 Watt Metal Halide Wall Pack Fixture; Difficult Access	125	0.125	270	1	New 24 Watt LED Wall Pack Fixture; Non-Dark Sky	25	0.025	54
MORAINE PARK	PARK OFFICE	27	INTERIOR		VESTIBULE	1	60 Watt Incandescent A-Lamp Fixture	60	0.060	135	1	Re-Lamp with (1) 10 Watt LED A19	10	0.010	22
MORAINE PARK	PARK OFFICE	27	INTERIOR		RECEPTION	1	Existing LED Fixture; No Retrofit	40	0.040	90	1	No Retrofit	40	0.040	90
MORAINE PARK	PARK OFFICE	27	INTERIOR		RECEPTION	1	T12 1x4 4-Lamp Wrap Fixture	144	0.144	324	1	Retrofit with (4) 12.5 Watt LED T8 4' Lamps; Direct Wire to Socket	50	0.050	112
MORAINE PARK	PARK OFFICE	27	INTERIOR		RECEPTION	4	13 Watt Plug-In CFL Downlight Fixture	13	0.052	117	4	No Retrofit	13	0.052	117
MORAINE PARK	PARK OFFICE	27	INTERIOR		RECEPTION	4	26 Watt Compact Fluorescent Downlight	26	0.104	234	4	Re-Lamp with (1) 10 Watt LED BR30	10	0.040	90
MORAINE PARK	PARK OFFICE	27	INTERIOR		WORK ROOM	10	T12 2x4 2-Lamp Surface Mount Fixture	78	0.780	1,753	10	Retrofit with (2) 12.5 Watt LED T8 4' Lamps; Direct Wire to Socket	25	0.250	562
MORAINE PARK	PARK OFFICE	27	INTERIOR		WORK ROOM	3	T12 2x2 2-Lamp U-Lamp Troffer Fixture with 6" Lamps	72	0.216	486	3	Retrofit with (2) 10 Watt LED T8 2' Lamps and (1) 2x2 2-Lamp White Reflector Kit; Direct Wire to Socket	20	0.060	135
MORAINE PARK	PARK OFFICE	27	INTERIOR		CLERK OFFICE	4	T12 2x4 2-Lamp Surface Mount Fixture	78	0.312	701	4	Retrofit with (2) 12.5 Watt LED T8 4' Lamps; Direct Wire to Socket	25	0.100	225
MORAINE PARK	PARK OFFICE	27	INTERIOR		LUNCH ROOM	4	T12 2x4 2-Lamp Surface Mount Fixture	78	0.312	701	4	Retrofit with (2) 12.5 Watt LED T8 4' Lamps; Direct Wire to Socket	25	0.100	225
MORAINE PARK	PARK OFFICE	27	INTERIOR		RESTROOM	1	T8 1x4 1-Lamp Vanity Fixture	30	0.030	16	1	Retrofit with (1) 12.5 Watt LED T8 4' Lamps; Direct Wire to Socket	12.5	0.013	7
MORAINE PARK	PARK OFFICE	27	INTERIOR		RESTROOM	1	T8 1x4 2-Lamp Wrap Fixture	62	0.062	32	1	Retrofit with (2) 12.5 Watt LED T8 4' Lamps; Direct Wire to Socket	25	0.025	13
MORAINE PARK	PARK OFFICE	27	INTERIOR		OFFICE	5	Existing LED Fixture; No Retrofit	30	0.150	337	5	No Retrofit	30	0.150	337
MORAINE PARK	PARK OFFICE	27	INTERIOR		OFFICE	1	T12 2x4 2-Lamp Surface Mount Fixture	78	0.078	175	1	Retrofit with (2) 12.5 Watt LED T8 4' Lamps; Direct Wire to Socket	25	0.025	56
MORAINE PARK	PARK OFFICE	27	INTERIOR		MECHANICAL	1	100 Watt Incandescent A-Lamp Fixture	100	0.100	100	1	Re-Lamp with (1) 18 Watt LED A21	18	0.018	18
MORAINE PARK	PARK OFFICE	27	INTERIOR		MECHANICAL	6	T12 2x4 2-Lamp Surface Mount Fixture	78	0.468	468	6	Retrofit with (2) 12.5 Watt LED T8 4' Lamps; Direct Wire to Socket	25	0.150	150
MORAINE PARK	PARK OFFICE	27	INTERIOR		WOMENS RESTROOM	1	Existing LED Fixture; No Retrofit	20	0.020	10	1	No Retrofit	20	0.020	10
MORAINE PARK	PARK OFFICE	27	INTERIOR		WOMENS RESTROOM	1	60 Watt Incandescent 2-Lamp Fixture	120	0.120	63	1	Re-Lamp with (2) 10 Watt LED A19	20	0.020	10
MORAINE PARK	PARK OFFICE	27	INTERIOR		JANITOR	1	13 Watt Compact Fluorescent Fixture	13	0.013	13	1	Re-Lamp with (1) 10 Watt LED A19	10	0.010	10
MORAINE PARK	PARK OFFICE	27	INTERIOR		MECHANICAL	1	13 Watt Compact Fluorescent Fixture	13	0.013	13	1	Re-Lamp with (1) 10 Watt LED A19	10	0.010	10

©2013 Energy Systems Group, LLC

EXISTING FIXTURES												PROPOSED FIXTURE UPGRADE				
Park/Building Name	Building	Building #	Phase	Floor	Room Description	Qty	Description	Watts	kW	kWh	Qty	Description	Watts	kW	kWh
MORAINE PARK	PARK OFFICE	27	INTERIOR		MANAGER OFFICE	8	T12 2x4 4-Lamp Surface Mount Fixture	144	1.152	2,590	8	Retrofit with (4) 12.5 Watt LED T8 4' Lamps; Direct Wire to Socket	50	0.400	899
MORAINE PARK	PARK OFFICE	27	INTERIOR		OFFICE	8	T12 2x4 4-Lamp Surface Mount Fixture	144	1.152	2,590	8	Retrofit with (4) 12.5 Watt LED T8 4' Lamps; Direct Wire to Socket	50	0.400	899
MORAINE PARK	PARK OFFICE	27	INTERIOR		RESTROOM	1	13 Watt Compact Fluorescent 2-Lamp Fixture	26	0.026	58	1	New 1x22-Lamp Vanity Fixture with (2) 10 Watt LED 2' Lamps; Direct Wire to Socket	14	0.014	31
MORAINE PARK	PARK OFFICE	27	INTERIOR		RESTROOM	1	Existing LED Fixture; No Retrofit	20	0.020	45	1	No Retrofit	20	0.020	45
MORAINE PARK	PARK OFFICE	27	INTERIOR		HALLWAY	1	Existing LED Fixture; No Retrofit	10	0.010	22	1	No Retrofit	10	0.010	22
MORAINE PARK	PARK OFFICE	27	EXTERIOR		EXTERIOR FLAG	1	90 Watt Incandescent PAR38 2-Lamp Fixture	180	0.180	389	1	Re-Lamp with (2) 17 Watt LED PAR38	34	0.034	73
MORAINE PARK	PARK OFFICE	27	EXTERIOR		EXTERIOR	2	60 Watt Incandescent A-Lamp Fixture	60	0.120	259	2	Re-Lamp with (1) 10 Watt LED A19	10	0.020	43
MORAINE PARK	PARK OFFICE	27	EXTERIOR		EXTERIOR	1	175 Watt Mercury Vapor Dusk to Dawn Fixture	210	0.210	454	1	New 26 Watt LED Dusk to Dawn Barnyard Fixture	26	0.026	56
MORAINE PARK	PARK OFFICE	27	EXTERIOR		EXTERIOR	1	60 Watt Incandescent A-Lamp Fixture	60	0.060	130	1	Re-Lamp with (1) 10 Watt LED A19	10	0.010	22
MCCONNELLS PARK	SEWAGE FILTER BUILDING	140	INTERIOR		MECHANICAL	7	T8 1x4 2-Lamp Vaportight Fixture	62	0.434	1,129	7	Retrofit with (2) 12.5 Watt LED T8 4' Lamps; Direct Wire to Socket	25	0.175	455
MCCONNELLS PARK	SEWAGE FILTER BUILDING	140	EXTERIOR		EXTERIOR	1	100 Watt High Pressure Sodium Wall Pack Fixture	125	0.125	548	1	New 24 Watt LED Wall Pack Fixture, Non-Dark Sky	25	0.025	110
MCCONNELLS PARK	MCCONNELLS MILLS OIL SHED	3	INTERIOR		OIL SHED	1	100 Watt Incandescent A-Lamp Fixture	100	0.100	100	1	Re-Lamp with (1) 18 Watt LED A21	18	0.018	18
MCCONNELLS PARK	MCCONNELLS MILL GRIST MILL	1	INTERIOR		MILL	12	23 Watt Compact Fluorescent Fixture	23	0.276	276	12	Re-Lamp with (1) 10 Watt LED A19	10	0.120	120
MCCONNELLS PARK	MCCONNELLS MILL GRIST MILL	1	INTERIOR		MILL	4	23 Watt Compact Fluorescent Fixture	23	0.092	92	4	Re-Lamp with (1) 10 Watt LED A19	10	0.040	40
MCCONNELLS PARK	MCCONNELLS MILL GRIST MILL	1	INTERIOR		OFFICE	4	23 Watt Compact Fluorescent Fixture	23	0.092	92	4	Re-Lamp with (1) 10 Watt LED A19	10	0.040	40
MCCONNELLS PARK	MCCONNELLS MILL GRIST MILL	1	INTERIOR		2ND	11	23 Watt Compact Fluorescent Fixture	23	0.253	253	11	Re-Lamp with (1) 10 Watt LED A19	10	0.110	110
MCCONNELLS PARK	MCCONNELLS MILL GRIST MILL	1	INTERIOR		LOWER LEVEL	15	23 Watt Compact Fluorescent Fixture	23	0.345	345	15	Re-Lamp with (1) 10 Watt LED A19	10	0.150	150
MCCONNELLS PARK	MCCONNELLS MILL GRIST MILL	1	INTERIOR		LOWER LEVEL	5	60 Watt Incandescent R40	60	0.300	300	5	Re-Lamp with (1) 17 Watt LED BR40	17	0.085	85
MCCONNELLS PARK	MCCONNELLS MILL GRIST MILL	1	INTERIOR		LOWER LEVEL	1	60 Watt Incandescent A-Lamp Fixture	60	0.060	60	1	Re-Lamp with (1) 10 Watt LED A19	10	0.010	10
MCCONNELLS PARK	MCCONNELLS MILL GRIST MILL	1	INTERIOR		BASEMENT	12	23 Watt Compact Fluorescent Fixture	23	0.276	276	12	Re-Lamp with (1) 10 Watt LED A19	10	0.120	120
MCCONNELLS PARK	MCCONNELLS MILL GRIST MILL	1	INTERIOR		BASEMENT	1	75 Watt Incandescent PAR38 2-Lamp	150	0.150	150	1	Re-Lamp with (2) 17 Watt LED PAR38	34	0.034	34
MCCONNELLS PARK	MCCONNELLS MILL GRIST MILL	1	INTERIOR		CLOSET	1	100 Watt Incandescent A-Lamp Fixture	100	0.100	100	1	Re-Lamp with (1) 18 Watt LED A21	18	0.018	18
MCCONNELLS PARK	MCCONNELLS MILL GRIST MILL	1	EXTERIOR		EXTERIOR	1	175 Watt Mercury Vapor Dusk to Dawn Fixture	210	0.210	920	1	New 26 Watt LED Dusk to Dawn Barnyard Fixture	26	0.026	114
MCCONNELLS PARK	MCCONNELLS MILLS MAINTENANCE	2	INTERIOR		OFFICE	2	T12 2x4 4-Lamp Troffer Fixture	144	0.288	749	2	Retrofit with (4) 12.5 Watt LED T8 4' Lamps; Direct Wire to Socket	50	0.100	260
MCCONNELLS PARK	MCCONNELLS MILLS MAINTENANCE	2	INTERIOR		RESTROOM	1	18 Watt Compact Fluorescent 2-Lamp Fixture	36	0.036	19	1	New 1x22-Lamp Vanity Fixture with (2) 10 Watt LED 2' Lamps; Direct Wire to Socket	14	0.014	7
MCCONNELLS PARK	MCCONNELLS MILLS MAINTENANCE	2	INTERIOR		RESTROOM	1	40 Watt Incandescent 2-Lamp Fixture	80	0.080	42	1	Re-Lamp with (2) 7 Watt LED A19	14	0.014	7

©2013 Energy Systems Group, LLC

EXISTING FIXTURES												PROPOSED FIXTURE UPGRADE				
Park/Building Name	Building	Building #	Phase	Floor	Room Description	Qty	Description	Watts	kW	kWh	Qty	Description	Watts	kW	kWh
MCCONNELLS PARK	MCCONNELLS MILLS MAINTENANCE	2	INTERIOR		MECHNICAL	1	23 Watt Compact Fluorescent Fixture	23	0.023	23	1	Re-Lamp with (1) 10 Watt LED A19	10	0.010	10
MCCONNELLS PARK	MCCONNELLS MILLS MAINTENANCE	2	INTERIOR		SHOP BAY	3	T12 1x4 2-Lamp Industrial Strip Fixture	72	0.216	562	3	Retrofit with (2) 12.5 Watt LED T8 4' Lamps; Direct Wire to Socket	25	0.075	195
MCCONNELLS PARK	MCCONNELLS MILLS MAINTENANCE	2	INTERIOR		SHOP BAY	4	23 Watt Compact Fluorescent Fixture	23	0.092	239	4	Re-Lamp with (1) 10 Watt LED A19	10	0.040	104
MCCONNELLS PARK	MCCONNELLS MILLS MAINTENANCE	2	INTERIOR		SHOP BAY	1	60 Watt Incandescent A-Lamp Fixture	60	0.060	156	1	Re-Lamp with (1) 10 Watt LED A19	10	0.010	26
MCCONNELLS PARK	MCCONNELLS MILLS MAINTENANCE	2	INTERIOR		BAY	6	23 Watt Compact Fluorescent Fixture	23	0.138	359	6	Re-Lamp with (1) 10 Watt LED A19	10	0.060	156
MCCONNELLS PARK	MCCONNELLS MILLS MAINTENANCE	2	INTERIOR		MEZZANNE	2	60 Watt Incandescent A-Lamp Fixture	60	0.120	312	2	Re-Lamp with (1) 10 Watt LED A19	10	0.020	52
MCCONNELLS PARK	MCCONNELLS MILLS MAINTENANCE	2	EXTERIOR		EXTERIOR	2	175 Watt Mercury Vapor Dusk to Dawn Fixture	210	0.420	1,840	2	New 26 Watt LED Dusk to Dawn Barnyard Fixture	26	0.052	228
MCCONNELLS PARK	MCCONNELLS MILLS MAINTENANCE	2	EXTERIOR		EXTERIOR	1	175 Watt Mercury Vapor Dusk to Dawn Fixture	210	0.210	920	1	New 26 Watt LED Dusk to Dawn Barnyard Fixture	26	0.026	114
MCCONNELLS PARK	MCCONNELLS MILLS COMFORT KILDO PICNIC	5	INTERIOR		MENS RESTROOM	3	26 Watt Plug-In CFL 2-Lamp 8" Downlight	58	0.174	644	3	No Retrofit	58	0.174	644
MCCONNELLS PARK	MCCONNELLS MILLS COMFORT KILDO PICNIC	5	INTERIOR		WOMENS RESTROOM	3	26 Watt Plug-In CFL 2-Lamp 8" Downlight	58	0.174	644	3	No Retrofit	58	0.174	644
MCCONNELLS PARK	MCCONNELLS MILLS COMFORT KILDO PICNIC	5	INTERIOR		MECHNICAL	1	T8 1x4 2-Lamp Vanity Fixture	62	0.062	62	1	Retrofit with (2) 12.5 Watt LED T8 4' Lamps; Direct Wire to Socket	25	0.025	25
MCCONNELLS PARK	MCCONNELLS MILLS COMFORT KILDO PICNIC	5	EXTERIOR		EXTERIOR	1	26 Watt Plug-In CFL 2-Lamp 8" Downlight	58	0.058	254	1	Retrofit with 13 Watt LED 8" Downlight	13	0.013	57
MCCONNELLS PARK	OJELL'S HOUSE	7	INTERIOR		OJELL HOUSE	1	100 Watt Incandescent A-Lamp Jelly Jar Fixture	100	0.100	370	1	Re-Lamp with (1) 18 Watt LED A21	18	0.018	67
CLEAR CREEK FOREST DISTRICT	MAINTENANCE HEADQUARTERS		INTERIOR		GARAGE	5	T12HO 1x8 2-Lamp Industrial Fixture, Turret; Difficult Access	230	1.150	2,991	5	New 1x8 4-Lamp Industrial Fixture with (4) 12.5 Watt LED T8 4' Lamps; Direct Wire to Socket; Difficult Access	50	0.250	650
CLEAR CREEK FOREST DISTRICT	MAINTENANCE HEADQUARTERS		INTERIOR		GARAGE	2	T12 1x4 2-Lamp Industrial Strip Fixture	72	0.144	375	2	Retrofit with (2) 12.5 Watt LED T8 4' Lamps; Direct Wire to Socket	25	0.050	130
CLEAR CREEK FOREST DISTRICT	MAINTENANCE HEADQUARTERS		INTERIOR		GARAGE	3	T12 1x4 2-Lamp Vanity Fixture; Damaged	72	0.216	562	3	New 1x4 2-Lamp Vanity Fixture with (2) 12.5 Watt LED T8 4' Lamp; Direct Wire to Socket	25	0.075	195
CLEAR CREEK FOREST DISTRICT	MAINTENANCE HEADQUARTERS		INTERIOR		GARAGE	2	60 Watt Incandescent A-Lamp Fixture	60	0.120	312	2	Re-Lamp with (1) 10 Watt LED A19	10	0.020	52
CLEAR CREEK FOREST DISTRICT	MAINTENANCE HEADQUARTERS		INTERIOR		UPSTAIRS STORAGE	4	T12 1x4 2-Lamp Wrap Fixture; Damaged	72	0.288	288	4	New 1x4 2-Lamp Wrap Fixture with (2) 12.5 Watt LED T8 4' Lamp; Direct Wire to Socket	25	0.100	100
CLEAR CREEK FOREST DISTRICT	MAINTENANCE HEADQUARTERS		INTERIOR		STORAGE	1	T12 1x4 2-Lamp Wrap Fixture	72	0.072	72	1	Retrofit with (2) 12.5 Watt LED T8 4' Lamps; Direct Wire to Socket	25	0.025	25
CLEAR CREEK FOREST DISTRICT	MAINTENANCE HEADQUARTERS		INTERIOR		GARAGE	2	T12 1x4 2-Lamp Industrial; Difficult Access	72	0.144	375	2	Retrofit with (2) 12.5 Watt LED T8 4' Lamps; Direct Wire to Socket; Difficult Access	25	0.050	130
CLEAR CREEK FOREST DISTRICT	MAINTENANCE HEADQUARTERS		INTERIOR		GARAGE	2	T12HO 1x8 2-Lamp Strip Fixture with 110 Watt Lamps	230	0.460	1,196	2	Retrofit with (4) 12.5 Watt LED T8 4' Lamps and (1) 44 Watt Strip Kit; Direct Wire to Socket	50	0.100	260
CLEAR CREEK FOREST DISTRICT	MAINTENANCE HEADQUARTERS		INTERIOR		GARAGE	1	T12HO 1x8 2-Lamp Industrial Fixture, Turret	230	0.230	598	1	New 1x8 2-Lamp Industrial Fixture with (4) 12.5 Watt LED T8 4' Lamps; Direct Wire to Socket	50	0.050	130
CLEAR CREEK FOREST DISTRICT	MAINTENANCE HEADQUARTERS		INTERIOR		GARAGE	3	T12HO 1x8 2-Lamp Industrial Fixture, Turret; Difficult Access	230	0.690	1,795	3	New 1x8 4-Lamp Industrial Fixture with (4) 12.5 Watt LED T8 4' Lamps; Direct Wire to Socket; Difficult Access	50	0.150	390
CLEAR CREEK FOREST DISTRICT	MAINTENANCE HEADQUARTERS		EXTERIOR		EXTERIOR WOOD STORAGE	1	75 Watt Incandescent PAR38 2-Lamp	150	0.150	657	1	Re-Lamp with (2) 17 Watt LED PAR38	34	0.034	149
CLEAR CREEK FOREST DISTRICT	MAINTENANCE HEADQUARTERS		EXTERIOR		EXTERIOR WOOD STORAGE	2	60 Watt Incandescent A-Lamp Fixture	60	0.120	526	2	Re-Lamp with (1) 10 Watt LED A19	10	0.020	88
CLEAR CREEK FOREST DISTRICT	MAINTENANCE HEADQUARTERS		EXTERIOR		EXTERIOR	1	60 Watt Incandescent A-Lamp Fixture	60	0.060	263	1	Re-Lamp with (1) 10 Watt LED A19	10	0.010	44

©2013 Energy Systems Group, LLC

EXISTING FIXTURES											PROPOSED FIXTURE UPGRADE				
Park/Building Name	Building	Building #	Phase	Floor	Room Description	Qty	Description	Watts	kW	kWh	Qty	Description	Watts	kW	kWh
CLEAR CREEK FOREST DISTRICT	MAINTENANCE HEADQUARTERS		EXTERIOR		EXTERIOR	1	250 Watt High Pressure Sodium Dusk to Dawn Fixture	300	0.300	1,314	1	New 26 Watt LED Dusk to Dawn Barnyard Fixture	26	0.026	114
CLEAR CREEK FOREST DISTRICT	MAINTENANCE HEADQUARTERS		EXTERIOR		EXTERIOR	1	100 Watt Incandescent A-Lamp Jelly Jar Fixture	100	0.100	438	1	Re-Lamp with (1) 18 Watt LED A21	18	0.018	79
CLEAR CREEK FOREST DISTRICT	MAINTENANCE HEADQUARTERS		INTERIOR		OFFICE	6	T12 2x4 2-Lamp Surface Mount Fixture, Difficult Access	72	0.432	971	6	Retrofit with (2) 12.5 Watt LED T8 4' Lamps; Direct Wire to Socket	25	0.150	337
CLEAR CREEK FOREST DISTRICT	MAINTENANCE HEADQUARTERS		INTERIOR		OFFICE	1	T12 1x4 2-Lamp Strip Fixture	72	0.072	162	1	Retrofit with (2) 12.5 Watt LED T8 4' Lamps; Direct Wire to Socket	25	0.025	56
CLEAR CREEK FOREST DISTRICT	WOOD SHOP		INTERIOR		GARAGE	1	T12 1x4 2-Lamp Industrial Strip Fixture	72	0.072	187	1	Retrofit with (2) 12.5 Watt LED T8 4' Lamps; Direct Wire to Socket	25	0.025	65
CLEAR CREEK FOREST DISTRICT	WOOD SHOP		INTERIOR		SHOP	4	T12 1x4 2-Lamp Vanity Fixture	72	0.288	749	4	Retrofit with (2) 12.5 Watt LED T8 4' Lamps; Direct Wire to Socket	25	0.100	260
CLEAR CREEK FOREST DISTRICT	WOOD SHOP		INTERIOR		SHOP	5	T12 1x4 2-Lamp Industrial Strip Fixture	72	0.360	936	5	Retrofit with (2) 12.5 Watt LED T8 4' Lamps; Direct Wire to Socket	25	0.125	325
CLEAR CREEK FOREST DISTRICT	WOOD SHOP		EXTERIOR		EXTERIOR	1	250 Watt High Pressure Sodium Dusk to Dawn Fixture	300	0.300	1,314	1	New 26 Watt LED Dusk to Dawn Barnyard Fixture	26	0.026	114
CLEAR CREEK FOREST DISTRICT	TRACTOR STORAGE		INTERIOR		GARAGE	5	60 Watt Incandescent A-Lamp Fixture	60	0.300	780	5	Re-Lamp with (1) 10 Watt LED A19	10	0.050	130
CLEAR CREEK FOREST DISTRICT	TRACTOR STORAGE		INTERIOR		GARAGE	3	60 Watt Incandescent A-Lamp Fixture	60	0.180	468	3	Re-Lamp with (1) 10 Watt LED A19	10	0.030	78
CLEAR CREEK FOREST DISTRICT	DISTRICT OFFICE		INTERIOR	1	WOMENS RESTROOM	1	100 Watt Incandescent 2-Lamp A-Lamp	200	0.200	450	1	Re-Lamp with (2) 18 Watt LED A21	36	0.036	81
CLEAR CREEK FOREST DISTRICT	DISTRICT OFFICE		INTERIOR	1	JANITOR	1	T12 2x2 2-Lamp U-Lamp Troffer Fixture with 6" Lamps	72	0.072	72	1	Retrofit with (2) 10 Watt LED T8 2' Lamps and (1) 2x2 2-Lamp White Reflector Kit; Direct Wire to Socket	20	0.020	20
CLEAR CREEK FOREST DISTRICT	DISTRICT OFFICE		INTERIOR	1	MENS RESTROOM	1	100 Watt Incandescent 2-Lamp A-Lamp	200	0.200	450	1	Re-Lamp with (2) 18 Watt LED A21	36	0.036	81
CLEAR CREEK FOREST DISTRICT	DISTRICT OFFICE		INTERIOR	1	FORRESTERS OFFICE	4	T12 2x4 4-Lamp Troffer Fixture	144	0.576	1,295	4	Retrofit with (4) 12.5 Watt LED T8 4' Lamps; Direct Wire to Socket	50	0.200	450
CLEAR CREEK FOREST DISTRICT	DISTRICT OFFICE		INTERIOR	1	CLOSET	1	T8 1x4 2-Lamp Wrap Fixture	62	0.062	62	1	Retrofit with (2) 12.5 Watt LED T8 4' Lamps; Direct Wire to Socket	25	0.025	25
CLEAR CREEK FOREST DISTRICT	DISTRICT OFFICE		INTERIOR	1	NETWORK CLOSET	2	T12 2x4 4-Lamp Troffer Fixture	144	0.288	288	2	Retrofit with (4) 12.5 Watt LED T8 4' Lamps; Direct Wire to Socket	50	0.100	100
CLEAR CREEK FOREST DISTRICT	DISTRICT OFFICE		INTERIOR	1	OFFICE FIRE	6	T12 2x4 4-Lamp Troffer Fixture	144	0.864	1,942	6	Retrofit with (4) 12.5 Watt LED T8 4' Lamps; Direct Wire to Socket	50	0.300	674
CLEAR CREEK FOREST DISTRICT	DISTRICT OFFICE		INTERIOR	1	CLOSET	1	T12 2x2 2-Lamp U-Lamp Troffer Fixture with 6" Lamps	72	0.072	72	1	Retrofit with (2) 10 Watt LED T8 2' Lamps and (1) 2x2 2-Lamp White Reflector Kit; Direct Wire to Socket	20	0.020	20
CLEAR CREEK FOREST DISTRICT	DISTRICT OFFICE		INTERIOR	1	CLOSET	1	T12 2x2 2-Lamp U-Lamp Troffer Fixture with 6" Lamps	72	0.072	72	1	Retrofit with (2) 10 Watt LED T8 2' Lamps and (1) 2x2 2-Lamp White Reflector Kit; Direct Wire to Socket	20	0.020	20
CLEAR CREEK FOREST DISTRICT	DISTRICT OFFICE		INTERIOR	1	OFFICE	3	T12 2x4 4-Lamp Troffer Fixture	144	0.432	971	3	Retrofit with (4) 12.5 Watt LED T8 4' Lamps; Direct Wire to Socket	50	0.150	337
CLEAR CREEK FOREST DISTRICT	DISTRICT OFFICE		INTERIOR	1	OFFICE DF	4	T12 2x4 4-Lamp Troffer Fixture	144	0.576	1,295	4	Retrofit with (4) 12.5 Watt LED T8 4' Lamps; Direct Wire to Socket	50	0.200	450
CLEAR CREEK FOREST DISTRICT	DISTRICT OFFICE		INTERIOR	1	CLOSET	1	T12 2x2 2-Lamp U-Lamp Troffer Fixture with 6" Lamps	72	0.072	72	1	Retrofit with (2) 10 Watt LED T8 2' Lamps and (1) 2x2 2-Lamp White Reflector Kit; Direct Wire to Socket	20	0.020	20
CLEAR CREEK FOREST DISTRICT	DISTRICT OFFICE		INTERIOR	1	CLOSET	1	T12 2x2 2-Lamp U-Lamp Troffer Fixture with 6" Lamps	72	0.072	72	1	Retrofit with (2) 10 Watt LED T8 2' Lamps and (1) 2x2 2-Lamp White Reflector Kit; Direct Wire to Socket	20	0.020	20
CLEAR CREEK FOREST DISTRICT	DISTRICT OFFICE		INTERIOR	1	OFFICE ADF	3	T12 2x4 4-Lamp Troffer Fixture	144	0.432	971	3	Retrofit with (4) 12.5 Watt LED T8 4' Lamps; Direct Wire to Socket	50	0.150	337
CLEAR CREEK FOREST DISTRICT	DISTRICT OFFICE		INTERIOR	1	COPY ROOM	4	T12 2x4 4-Lamp Troffer Fixture	144	0.576	1,295	4	Retrofit with (4) 12.5 Watt LED T8 4' Lamps; Direct Wire to Socket	50	0.200	450
CLEAR CREEK FOREST DISTRICT	DISTRICT OFFICE		INTERIOR	1	HALLWAY	14	T12 2x4 4-Lamp Troffer Fixture	144	2.016	4,532	14	Retrofit with (4) 12.5 Watt LED T8 4' Lamps; Direct Wire to Socket	50	0.700	1,574

©2013 Energy Systems Group, LLC

EXISTING FIXTURES											PROPOSED FIXTURE UPGRADE				
Park/Building Name	Building	Building #	Phase	Floor	Room Description	Qty	Description	Watts	kW	kWh	Qty	Description	Watts	kW	kWh
CLEAR CREEK FOREST DISTRICT	DISTRICT OFFICE		INTERIOR	1	HALLWAY	4	3 Watt LED 2-Lamp Exit Sign	3	0.012	105	4	No Retrofit	3	0.012	105
CLEAR CREEK FOREST DISTRICT	DISTRICT OFFICE		INTERIOR	1	VESTIBULE	1	42 Watt Plug-In CFL Downlight Fixture	42	0.042	94	1	No Retrofit	42	0.042	94
CLEAR CREEK FOREST DISTRICT	DISTRICT OFFICE		INTERIOR	1	VESTIBULE	1	3 Watt LED 2-Lamp Exit Sign	3	0.003	26	1	No Retrofit	3	0.003	26
CLEAR CREEK FOREST DISTRICT	DISTRICT OFFICE		INTERIOR	1	VESTIBULE	1	42 Watt Plug-In CFL Downlight Fixture	42	0.042	94	1	No Retrofit	42	0.042	94
CLEAR CREEK FOREST DISTRICT	DISTRICT OFFICE		INTERIOR	1	VESTIBULE	1	3 Watt LED 2-Lamp Exit Sign	3	0.003	26	1	No Retrofit	3	0.003	26
CLEAR CREEK FOREST DISTRICT	DISTRICT OFFICE		INTERIOR	1	OPEN AREA	4	42 Watt Plug-In CFL Downlight Fixture; Difficult Access	45	0.180	405	4	No Retrofit	45	0.180	405
CLEAR CREEK FOREST DISTRICT	DISTRICT OFFICE		INTERIOR	1	OPEN AREA	4	42 Watt Plug-In CFL Downlight Fixture; Difficult Access	45	0.180	405	4	No Retrofit	45	0.180	405
CLEAR CREEK FOREST DISTRICT	DISTRICT OFFICE		INTERIOR	1	OPEN AREA	2	3 Watt LED 2-Lamp Exit Sign	3	0.006	53	2	No Retrofit	3	0.006	53
CLEAR CREEK FOREST DISTRICT	DISTRICT OFFICE		INTERIOR	1	MENS RESTROOM	1	T8 2x2 2-Lamp Troffer Fixture	36	0.036	81	1	Retrofit with (2) 10 Watt LED T8 2' Lamps; Direct Wire to Socket	20	0.020	45
CLEAR CREEK FOREST DISTRICT	DISTRICT OFFICE		INTERIOR	1	WOMENS RESTROOM	1	T8 2x2 2-Lamp Troffer Fixture	36	0.036	81	1	Retrofit with (2) 10 Watt LED T8 2' Lamps; Direct Wire to Socket	20	0.020	45
CLEAR CREEK FOREST DISTRICT	DISTRICT OFFICE		INTERIOR	1	KITCHEN	4	T8 2x2 2-Lamp Troffer Fixture	36	0.144	324	4	Retrofit with (2) 10 Watt LED T8 2' Lamps; Direct Wire to Socket	20	0.080	180
CLEAR CREEK FOREST DISTRICT	DISTRICT OFFICE		INTERIOR	1	CONFERENCE	12	T8 2x4 2-Lamp Volumetric Fixture; Dimming	62	0.744	1,673	12	Retrofit with (2) 14 Watt LED T8 4' Lamps and (1) Dimming Driver	32	0.384	863
CLEAR CREEK FOREST DISTRICT	DISTRICT OFFICE		INTERIOR	1	CONFERENCE	1	3 Watt LED 2-Lamp Exit Sign	3	0.003	26	1	No Retrofit	3	0.003	26
CLEAR CREEK FOREST DISTRICT	DISTRICT OFFICE		INTERIOR	1	CLOSET	1	T8 2x2 2-Lamp Troffer Fixture	36	0.036	36	1	Retrofit with (2) 10 Watt LED T8 2' Lamps; Direct Wire to Socket	20	0.020	20
CLEAR CREEK FOREST DISTRICT	DISTRICT OFFICE		INTERIOR	B	VESTIBULE	1	T8 2x2 2-Lamp Troffer Fixture	36	0.036	81	1	Retrofit with (2) 10 Watt LED T8 2' Lamps; Direct Wire to Socket	20	0.020	45
CLEAR CREEK FOREST DISTRICT	DISTRICT OFFICE		INTERIOR	B	VESTIBULE	1	3 Watt LED 2-Lamp Exit Sign	3	0.003	26	1	No Retrofit	3	0.003	26
CLEAR CREEK FOREST DISTRICT	DISTRICT OFFICE		INTERIOR	B	HALLWAY	1	T8 2x2 2-Lamp Troffer Fixture	36	0.036	81	1	Retrofit with (2) 10 Watt LED T8 2' Lamps; Direct Wire to Socket	20	0.020	45
CLEAR CREEK FOREST DISTRICT	DISTRICT OFFICE		INTERIOR	B	HALLWAY	1	3 Watt LED 2-Lamp Exit Sign	3	0.003	26	1	No Retrofit	3	0.003	26
CLEAR CREEK FOREST DISTRICT	DISTRICT OFFICE		INTERIOR	B	HALLWAY	2	T8 2x2 2-Lamp Troffer Fixture	36	0.072	162	2	Retrofit with (2) 10 Watt LED T8 2' Lamps; Direct Wire to Socket	20	0.040	90
CLEAR CREEK FOREST DISTRICT	DISTRICT OFFICE		INTERIOR	B	MECHANICAL	3	T8 1x4 2-Lamp Vanity Fixture	62	0.186	186	3	Retrofit with (2) 12.5 Watt LED T8 4' Lamps; Direct Wire to Socket	25	0.075	75
CLEAR CREEK FOREST DISTRICT	DISTRICT OFFICE		INTERIOR		NEW GARAGE	10	T8 1x4 2-Lamp Wrap Fixture	62	0.620	1,613	10	Retrofit with (2) 12.5 Watt LED T8 4' Lamps; Direct Wire to Socket	25	0.250	650
CLEAR CREEK FOREST DISTRICT	DISTRICT OFFICE		INTERIOR		OLD GARAGE	9	T12 2x4 2-Lamp Troffer Fixture	78	0.702	1,826	9	Retrofit with (2) 12.5 Watt LED T8 4' Lamps; Direct Wire to Socket	25	0.225	585
CLEAR CREEK FOREST DISTRICT	DISTRICT OFFICE		INTERIOR		CLOSET	1	T12 2x2 2-Lamp U-Lamp Troffer Fixture with 6" Lamps	72	0.072	72	1	Retrofit with (2) 10 Watt LED T8 2' Lamps and (1) 2x2 2-Lamp White Reflector Kit; Direct Wire to Socket	20	0.020	20
CLEAR CREEK FOREST DISTRICT	DISTRICT OFFICE		INTERIOR		STORAGE	2	T12 2x4 2-Lamp Troffer Fixture	78	0.156	156	2	Retrofit with (2) 12.5 Watt LED T8 4' Lamps; Direct Wire to Socket	25	0.050	50
CLEAR CREEK FOREST DISTRICT	DISTRICT OFFICE		INTERIOR	B	MECHANICAL	1	T8 2x4 4-Lamp Troffer Fixture	106	0.106	106	1	Retrofit with (4) 12.5 Watt LED T8 4' Lamps; Direct Wire to Socket	50	0.050	50
CLEAR CREEK FOREST DISTRICT	DISTRICT OFFICE		INTERIOR	B	RESTROOM	1	100 Watt Incandescent 2-Lamp A-Lamp	200	0.200	450	1	Re-Lamp with (2) 18 Watt LED A21	36	0.036	81

©2013 Energy Systems Group, LLC



EXISTING FIXTURES											PROPOSED FIXTURE UPGRADE				
Park/Building Name	Building	Building #	Phase	Floor	Room Description	Qty	Description	Watts	kW	kWh	Qty	Description	Watts	kW	kWh
CLEAR CREEK FOREST DISTRICT	DISTRICT OFFICE		INTERIOR	B	RESTROOM	1	60 Watt Incandescent 4" Downlight Fixture	60	0.060	135	1	Re-Lamp with (1) 10 Watt LED BR30	10	0.010	22
CLEAR CREEK FOREST DISTRICT	DISTRICT OFFICE		INTERIOR	B	BRC OFFICE	10	T8 2x4 4-Lamp Troffer Fixture	106	1.060	2,383	10	Retrofit with (4) 12.5 Watt LED T8 4' Lamps; Direct Wire to Socket	50	0.500	1,124
CLEAR CREEK FOREST DISTRICT	DISTRICT OFFICE		INTERIOR		STAIRS	3	100 Watt Incandescent Cylinder Fixture	100	0.300	2,628	3	Re-Lamp with (1) 17 Watt LED BR40	17	0.051	447
CLEAR CREEK FOREST DISTRICT	DISTRICT OFFICE		INTERIOR		STAIRS	1	T12 2x4 4-Lamp Surface Mount Fixture; Difficult Access	144	0.144	1,261	1	Retrofit with (4) 14 Watt LED T8 4' Lamps and (2) Dimming Driver	50	0.050	438
CLEAR CREEK FOREST DISTRICT	DISTRICT OFFICE		EXTERIOR		EXTERIOR	6	42 Watt Plug-In CFL 2-Lamp Wall Pack Fixture	90	0.540	2,365	6	New 24 Watt LED Wall Pack Fixture; Non-Dark Sky	25	0.150	657
CLEAR CREEK FOREST DISTRICT	DISTRICT OFFICE		EXTERIOR		EXTERIOR	11	150 Watt Metal Halide Shoebox Fixture	180	1.980	8,672	11	New 50 Watt LED Shoebox Fixture	51	0.561	2,457
CLEAR CREEK FOREST DISTRICT	DISTRICT OFFICE		EXTERIOR		EXTERIOR	4	26 Watt Plug-In CFL Bollard Fixture	29	0.116	508	4	New 12 Watt LED Bollard Fixture	12	0.048	210
CLEAR CREEK FOREST DISTRICT	DISTRICT OFFICE		EXTERIOR		EXTERIOR	6	26 Watt Plug-In CFL 4" Downlight Fixture	29	0.174	762	6	Retrofit with 13 Watt LED 4" Downlight	13	0.078	342
CLEAR CREEK FOREST DISTRICT	BUILDING 8512		INTERIOR		GARAGE	8	T12 1x4 2-Lamp Strip Fixture	72	0.576	1,498	8	Retrofit with (2) 12.5 Watt LED T8 4' Lamps; Direct Wire to Socket	25	0.200	520
CLEAR CREEK FOREST DISTRICT	BUILDING 8512		INTERIOR		GARAGE	1	T12 2x2 2-Lamp Vanity Fixture	42	0.042	109	1	Retrofit with (2) 10 Watt LED T8 2' Lamps; Direct Wire to Socket	20	0.020	52
CLEAR CREEK FOREST DISTRICT	BUILDING 8512		INTERIOR		GARAGE	8	T12HO 1x8 2-Lamp Strip Fixture with 110 Watt Lamps	230	1.840	4,786	8	Retrofit with (4) 12.5 Watt LED T8 4' Lamps and (1) 1x8 4-Lamp Strip Kit; Direct Wire to Socket	50	0.400	1,040
CLEAR CREEK FOREST DISTRICT	BUILDING 8512		EXTERIOR		EXTERIOR	1	60 Watt Incandescent 4" Downlight Fixture	60	0.060	263	1	Re-Lamp with (1) 10 Watt LED BR30	10	0.010	44
CLEAR CREEK FOREST DISTRICT	BUILDING 8512		EXTERIOR		EXTERIOR	1	150 Watt Metal Halide Shoebox Fixture; Wall Mount	188	0.188	823	1	New 50 Watt LED Shoebox Fixture; Wall Mount	56	0.056	245
CLEAR CREEK FOREST DISTRICT	BUILDING 8512		EXTERIOR		EXTERIOR	1	60 Watt Incandescent A-Lamp Fixture	60	0.060	263	1	Re-Lamp with (1) 10 Watt LED A19	10	0.010	44
LINN RUN STATE PARK	PARK OFFICE		INTERIOR		RECEPTION	4	13 Watt Plug-In CFL 4-Lamp Drum Fixture	56	0.224	504	4	No Retrofit	56	0.224	504
LINN RUN STATE PARK	PARK OFFICE		INTERIOR		RECEPTION BEHIND COUNTER	4	13 Watt Plug-In CFL 3-Lamp Drum Fixture	42	0.168	378	4	No Retrofit	42	0.168	378
LINN RUN STATE PARK	PARK OFFICE		INTERIOR		RECEPTION BEHIND COUNTER	1	Existing LED Fixture; No Retrofit	40	0.040	90	1	No Retrofit	40	0.040	90
LINN RUN STATE PARK	PARK OFFICE		INTERIOR		RECEPTION BEHIND COUNTER	4	13 Watt Plug-In CFL 3-Lamp Drum Fixture	42	0.168	378	4	No Retrofit	42	0.168	378
LINN RUN STATE PARK	PARK OFFICE		INTERIOR		RECEPTION BEHIND COUNTER	1	15 Watt Compact Fluorescent 4-Lamp Fixture	60	0.060	135	1	Re-Lamp with (4) 10 Watt LED A19	40	0.040	90
LINN RUN STATE PARK	PARK OFFICE		INTERIOR		MECHANICAL	1	60 Watt Incandescent A-Lamp Fixture	60	0.060	60	1	Re-Lamp with (1) 10 Watt LED A19	10	0.010	10
LINN RUN STATE PARK	PARK OFFICE		INTERIOR		HALLWAY	3	13 Watt Plug-In CFL 3-Lamp Drum Fixture	42	0.126	283	3	No Retrofit	42	0.126	283
LINN RUN STATE PARK	PARK OFFICE		INTERIOR		HALLWAY	1	23 Watt Compact Fluorescent 5-Lamp Fixture	115	0.115	259	1	Re-Lamp with (5) 10 Watt LED A19	50	0.050	112
LINN RUN STATE PARK	PARK OFFICE		INTERIOR		HALLWAY	1	60 Watt Incandescent 4-Lamp Fixture	240	0.240	540	1	Re-Lamp with (4) 10 Watt LED A19	40	0.040	90
LINN RUN STATE PARK	PARK OFFICE		INTERIOR		CLOSET	2	60 Watt Incandescent A-Lamp Fixture	60	0.120	120	2	Re-Lamp with (1) 10 Watt LED A19	10	0.020	20
LINN RUN STATE PARK	PARK OFFICE		INTERIOR		KITCHEN	2	T8 1x4 2-Lamp Wrap Fixture	62	0.124	279	2	Retrofit with (2) 12.5 Watt LED T8 4' Lamps; Direct Wire to Socket	25	0.050	112
LINN RUN STATE PARK	PARK OFFICE		INTERIOR		CONFERENCE	6	Existing LED Fixture; No Retrofit	20	0.120	270	6	No Retrofit	20	0.120	270

©2013 Energy Systems Group, LLC

EXISTING FIXTURES												PROPOSED FIXTURE UPGRADE				
Park/Building Name	Building	Building #	Phase	Floor	Room Description	Qty	Description	Watts	kW	kWh	Qty	Description	Watts	kW	kWh
LINN RUN STATE PARK	PARK OFFICE		INTERIOR		CONFERENCE	2	26 Watt Compact Fluorescent 5-Lamp Fixture	130	0.260	584	2	Re-Lamp with (5) 10 Watt LED A19	50	0.100	225
LINN RUN STATE PARK	PARK OFFICE		INTERIOR		CONFERENCE	1	26 Watt Compact Fluorescent 4-Lamp Fixture	104	0.104	234	1	Re-Lamp with (4) 10 Watt LED A19	40	0.040	90
LINN RUN STATE PARK	PARK OFFICE		INTERIOR		LOCKED AREA	2	T8 1x4 2-Lamp Wrap Fixture	62	0.124	279	2	Retrofit with (2) 12.5 Watt LED T8 4' Lamps; Direct Wire to Socket	25	0.050	112
LINN RUN STATE PARK	PARK OFFICE		INTERIOR		RESTROOM	2	T12 2x2 2-Lamp U-Lamp Troffer Fixture with 6" Lamps	72	0.144	324	2	Retrofit with (2) 10 Watt LED T8 2' Lamps and (1) 2x2 Lamp Reflector Kit; Direct Wire to Socket	20	0.040	90
LINN RUN STATE PARK	PARK OFFICE		INTERIOR		OFFICE	2	26 Watt Plug-In CFL 3-Lamp Fixture	87	0.174	391	2	No Retrofit	87	0.174	391
LINN RUN STATE PARK	PARK OFFICE		INTERIOR		OFFICE	2	Existing LED Fixture; No Retrofit	20	0.040	90	2	No Retrofit	20	0.040	90
LINN RUN STATE PARK	PARK OFFICE		INTERIOR		COPY ROOM	1	13 Watt Compact Fluorescent 2-Lamp Fixture	26	0.026	58	1	Re-Lamp with (2) 10 Watt LED A19	20	0.020	45
LINN RUN STATE PARK	PARK OFFICE		INTERIOR		COPY ROOM	1	26 Watt Plug-In CFL 3-Lamp Fixture	87	0.087	196	1	No Retrofit	87	0.087	196
LINN RUN STATE PARK	PARK OFFICE		INTERIOR		COPY ROOM	2	26 Watt Compact Fluorescent 2-Lamp Fixture	52	0.104	234	2	Re-Lamp with (2) 10 Watt LED A19	20	0.040	90
LINN RUN STATE PARK	PARK OFFICE		EXTERIOR		EXTERIOR FRONT	2	13 Watt Compact Fluorescent Fixture	13	0.026	114	2	Re-Lamp with (1) 10 Watt LED A19	10	0.020	88
LINN RUN STATE PARK	PARK OFFICE		EXTERIOR		EXTERIOR FRONT	2	23 Watt Compact Fluorescent 2-Lamp PAR38	46	0.092	403	2	Re-Lamp with (2) 17 Watt LED PAR38	34	0.068	298
LINN RUN STATE PARK	PARK OFFICE		INTERIOR		PUBLIC RESTROOM	2	T8 1x4 2-Lamp Wrap Fixture	62	0.124	279	2	Retrofit with (2) 12.5 Watt LED T8 4' Lamps; Direct Wire to Socket	25	0.050	112
LINN RUN STATE PARK	PARK OFFICE		EXTERIOR		EXTERIOR BACK PORCH	4	13 Watt Compact Fluorescent Fixture	13	0.052	228	4	Re-Lamp with (1) 10 Watt LED A19	10	0.040	175
LINN RUN STATE PARK	NEW LUNCH ROOM FORGE		INTERIOR		LUNCH AREA	5	T12 1x4 2-Lamp Strip Fixture	72	0.360	1,333	5	Retrofit with (2) 12.5 Watt LED T8 4' Lamps; Direct Wire to Socket	25	0.125	463
LINN RUN STATE PARK	NEW LUNCH ROOM FORGE		INTERIOR		LOCKERS	1	T12 1x4 2-Lamp Strip Fixture	72	0.072	267	1	Retrofit with (2) 12.5 Watt LED T8 4' Lamps; Direct Wire to Socket	25	0.025	93
LINN RUN STATE PARK	NEW LUNCH ROOM FORGE		INTERIOR		RESTROOM	1	60 Watt Incandescent A-Lamp Fixture	60	0.060	222	1	Re-Lamp with (1) 10 Watt LED A19	10	0.010	37
LINN RUN STATE PARK	WHITE POLE BUILDING		INTERIOR		BARN	5	23 Watt Compact Fluorescent Fixture	23	0.115	426	5	Re-Lamp with (1) 10 Watt LED A19	10	0.050	185
LINN RUN STATE PARK	WHITE POLE BUILDING		EXTERIOR		EXTERIOR	1	175 Watt Metal Halide Dusk to Dawn Fixture	213	0.213	933	1	New 26 Watt LED Dusk to Dawn Barnyard Fixture	26	0.026	114
LINN RUN STATE PARK	SHOP STORAGE CARPENTRY	19	INTERIOR		SHOP	9	T12 1x8 2-Lamp Industrial Strip Fixture with 75 Watt Lamps	158	1.422	1,422	9	Retrofit with (4) 12.5 Watt LED T8 4' Lamps and (1) 1x8 4-Lamp Industrial Strip Kit; Direct Wire to Socket	50	0.450	450
LINN RUN STATE PARK	SHOP STORAGE CARPENTRY	19	EXTERIOR		EXTERIOR	1	60 Watt Incandescent A-Lamp Fixture	60	0.060	263	1	Re-Lamp with (1) 10 Watt LED A19	10	0.010	44
LINN RUN STATE PARK	SHOP STORAGE CARPENTRY	19	EXTERIOR		EXTERIOR	1	175 Watt Metal Halide Dusk to Dawn Fixture	213	0.213	933	1	New 26 Watt LED Dusk to Dawn Barnyard Fixture	26	0.026	114
LINN RUN STATE PARK	LIFT BUILDING		INTERIOR		SHOP	14	23 Watt Compact Fluorescent Fixture	23	0.322	838	14	Re-Lamp with (1) 10 Watt LED A19	10	0.140	364
LINN RUN STATE PARK	LIFT BUILDING		INTERIOR		LIFT AREA	6	23 Watt Compact Fluorescent Fixture	23	0.138	359	6	Re-Lamp with (1) 10 Watt LED A19	10	0.060	156
LINN RUN STATE PARK	LIFT BUILDING		INTERIOR		LIFT AREA	4	T12 2x2 4-Lamp Surface Mount Fixture	86	0.344	895	4	Retrofit with (4) 10 Watt LED T8 2' Lamps; Direct Wire to Socket	40	0.160	416
LINN RUN STATE PARK	RESIDENCE		INTERIOR		KITCHEN	1	13 Watt Compact Fluorescent 5-Lamp Fixture	65	0.065	241	1	Re-Lamp with (5) 10 Watt LED A19	50	0.050	185
LINN RUN STATE PARK	RESIDENCE		INTERIOR		KITCHEN	1	40 Watt Incandescent 4-Lamp Fixture	160	0.160	593	1	Re-Lamp with (4) 7 Watt LED A19	28	0.028	104

©2013 Energy Systems Group, LLC

EXISTING FIXTURES											PROPOSED FIXTURE UPGRADE				
Park/Building Name	Building	Building #	Phase	Floor	Room Description	Qty	Description	Watts	kW	kWh	Qty	Description	Watts	kW	kWh
LINN RUN STATE PARK	RESIDENCE		INTERIOR		KITCHEN	1	150 Watt Incandescent A-Lamp Fixture	150	0.150	556	1	Re-Lamp with (1) 18 Watt LED A21	18	0.018	67
LINN RUN STATE PARK	RESIDENCE		INTERIOR		DINING	1	40 Watt Incandescent 5-Lamp A-Lamp	200	0.200	741	1	Re-Lamp with (5) 7 Watt LED A19	35	0.035	130
LINN RUN STATE PARK	RESIDENCE		INTERIOR		LIVING ROOM	1	40 Watt Incandescent 2-Lamp Fixture	80	0.080	296	1	Re-Lamp with (2) 7 Watt LED A19	14	0.014	52
LINN RUN STATE PARK	RESIDENCE		INTERIOR		BACK SUN ROOM	1	13 Watt Compact Fluorescent 3-Lamp Fixture	39	0.039	144	1	Re-Lamp with (3) 10 Watt LED A19	30	0.030	111
LINN RUN STATE PARK	RESIDENCE		INTERIOR		ENTRYWAY	2	40 Watt Incandescent 3-Lamp Candelabra Fixture	120	0.240	889	2	Re-Lamp with (3) 5 Watt LED Candelabra	15	0.030	111
LINN RUN STATE PARK	RESIDENCE		INTERIOR		ENTRYWAY	1	60 Watt Incandescent A-Lamp Fixture	60	0.060	222	1	Re-Lamp with (1) 10 Watt LED A19	10	0.010	37
LINN RUN STATE PARK	RESIDENCE		INTERIOR		RESTROOM	1	40 Watt Incandescent 2-Lamp Fixture	80	0.080	296	1	Re-Lamp with (2) 7 Watt LED A19	14	0.014	52
LINN RUN STATE PARK	RESIDENCE		INTERIOR		RESTROOM	1	T12 2x2 2-Lamp U-Lamp Troffer Fixture with 6" Lamps	72	0.072	267	1	Retrofit with (2) 10 Watt LED T8 2' Lamps and (1) 2x2 2-Lamp White Reflector Kit; Direct Wire to Socket	20	0.020	74
LINN RUN STATE PARK	RESIDENCE		INTERIOR		STAIRS	1	40 Watt Incandescent 4-Lamp Fixture	160	0.160	593	1	Re-Lamp with (4) 7 Watt LED A19	28	0.028	104
LINN RUN STATE PARK	RESIDENCE		INTERIOR		BEDROOM	1	40 Watt Incandescent 5-Lamp A-Lamp	200	0.200	741	1	Re-Lamp with (5) 7 Watt LED A19	35	0.035	130
LINN RUN STATE PARK	RESIDENCE		INTERIOR		CLOSET	1	60 Watt Incandescent 2-Lamp Fixture	120	0.120	444	1	Re-Lamp with (2) 10 Watt LED A19	20	0.020	74
LINN RUN STATE PARK	RESIDENCE		INTERIOR		BEDROOM	1	60 Watt Incandescent 2-Lamp Fixture	120	0.120	444	1	Re-Lamp with (2) 10 Watt LED A19	20	0.020	74
LINN RUN STATE PARK	RESIDENCE		INTERIOR		CLOSET	1	40 Watt Incandescent A-Lamp Fixture	40	0.040	148	1	Re-Lamp with (1) 7 Watt LED A19	7	0.007	26
LINN RUN STATE PARK	RESIDENCE		INTERIOR		BEDROOM	1	40 Watt Incandescent 2-Lamp Fixture	80	0.080	296	1	Re-Lamp with (2) 7 Watt LED A19	14	0.014	52
LINN RUN STATE PARK	RESIDENCE		INTERIOR		CLOSET	1	40 Watt Incandescent 2-Lamp Fixture	80	0.080	296	1	Re-Lamp with (2) 7 Watt LED A19	14	0.014	52
LINN RUN STATE PARK	RESIDENCE		INTERIOR		RESTROOM	1	40 Watt Incandescent 4-Lamp Candelabra Fixture	160	0.160	593	1	Re-Lamp with (4) 5 Watt LED Candelabra	20	0.020	74
LINN RUN STATE PARK	RESIDENCE		INTERIOR		RESTROOM	1	40 Watt Incandescent 3-Lamp Fixture	120	0.120	444	1	Re-Lamp with (3) 7 Watt LED A19	21	0.021	78
LINN RUN STATE PARK	RESIDENCE		INTERIOR		RESTROOM	1	60 Watt Incandescent A-Lamp Fixture	60	0.060	222	1	Re-Lamp with (1) 10 Watt LED A19	10	0.010	37
LINN RUN STATE PARK	RESIDENCE		INTERIOR		BASEMENT	5	13 Watt Compact Fluorescent Fixture	13	0.065	241	5	Re-Lamp with (1) 10 Watt LED A19	10	0.050	185
LINN RUN STATE PARK	RESIDENCE		EXTERIOR		EXTERIOR	1	13 Watt Compact Fluorescent Fixture	13	0.013	57	1	Re-Lamp with (1) 10 Watt LED A19	10	0.010	44
LINN RUN STATE PARK	RESIDENCE		EXTERIOR		EXTERIOR	2	75 Watt Incandescent PAR38 3-Lamp Fixture	225	0.450	1,971	2	Relamp with (3) 17 Watt LED PAR38	51	0.102	447
LINN RUN STATE PARK	RESIDENCE		EXTERIOR		EXTERIOR	1	13 Watt Compact Fluorescent Fixture	13	0.013	57	1	Re-Lamp with (1) 10 Watt LED A19	10	0.010	44
LINN RUN STATE PARK	SHOWER HOUSE		INTERIOR		MENS RESTROOM	2	42 Watt Compact Fluorescent Canopy Fixture	42	0.084	385	2	Re-Lamp with (1) 18 Watt LED A21	18	0.036	165
LINN RUN STATE PARK	SHOWER HOUSE		INTERIOR		MENS RESTROOM	1	13 Watt Compact Fluorescent 2-Lamp Fixture	26	0.026	119	1	Re-Lamp with (2) 10 Watt LED A19	20	0.020	92
LINN RUN STATE PARK	SHOWER HOUSE		INTERIOR		WOMENS RESTROOM	2	42 Watt Compact Fluorescent Canopy Fixture	42	0.084	385	2	Re-Lamp with (1) 18 Watt LED A21	18	0.036	165
LINN RUN STATE PARK	SHOWER HOUSE		INTERIOR		WOMENS RESTROOM	1	13 Watt Compact Fluorescent 2-Lamp Fixture	26	0.026	119	1	Re-Lamp with (2) 10 Watt LED A19	20	0.020	92

©2013 Energy Systems Group, LLC

EXISTING FIXTURES											PROPOSED FIXTURE UPGRADE				
Park/Building Name	Building	Building #	Phase	Floor	Room Description	Qty	Description	Watts	kW	kWh	Qty	Description	Watts	kW	kWh
LINN RUN STATE PARK	SHOWER HOUSE		INTERIOR		LAUNDRY	1	13 Watt Compact Fluorescent 2-Lamp Fixture	26	0.026	119	1	Re-Lamp with (2) 10 Watt LED A19	20	0.020	92
LINN RUN STATE PARK	SHOWER HOUSE		EXTERIOR		EXTERIOR	1	13 Watt Compact Fluorescent Canopy Fixture	13	0.013	37	1	New 10 Watt LED Canopy Fixture	12	0.012	35
LINN RUN STATE PARK	SHOWER HOUSE		EXTERIOR		EXTERIOR	2	23 Watt Compact Fluorescent 2-Lamp PAR38	46	0.092	265	2	Re-Lamp with (2) 17 Watt LED PAR38	34	0.068	196
LINN RUN STATE PARK	SHOWER HOUSE		EXTERIOR		EXTERIOR	1	175 Watt Metal Halide Dusk to Dawn Fixture	213	0.213	613	1	New 26 Watt LED Dusk to Dawn Barnyard Fixture	26	0.026	75
LINN RUN STATE PARK	SHOWER HOUSE		INTERIOR		BASEMENT	2	13 Watt Compact Fluorescent Fixture	13	0.026	119	2	Re-Lamp with (1) 10 Watt LED A19	10	0.020	92
LINN RUN STATE PARK	SHOWER HOUSE		INTERIOR		BASEMENT	3	100 Watt Incandescent A-Lamp Fixture	100	0.300	1,374	3	Re-Lamp with (1) 18 Watt LED A21	18	0.054	247
LINN RUN STATE PARK	SHOWER HOUSE		INTERIOR		BASEMENT	2	42 Watt Compact Fluorescent Fixture	42	0.084	385	2	Re-Lamp with (1) 18 Watt LED A21	18	0.036	165
LINN RUN STATE PARK	SHOWER HOUSE		INTERIOR		MECHANICAL	2	42 Watt Compact Fluorescent Fixture	42	0.084	385	2	Re-Lamp with (1) 18 Watt LED A21	18	0.036	165
LINN RUN STATE PARK	LATRINE	9/10	INTERIOR		MENS RESTROOM	1	13 Watt Compact Fluorescent Fixture	13	0.013	60	1	Re-Lamp with (1) 10 Watt LED A19	10	0.010	46
LINN RUN STATE PARK	LATRINE	9/10	INTERIOR		WOMENS RESTROOM	1	13 Watt Compact Fluorescent 2-Lamp Fixture	26	0.026	119	1	Re-Lamp with (2) 10 Watt LED A19	20	0.020	92
LINN RUN STATE PARK	LATRINE	9/10	EXTERIOR		EXTERIOR	1	175 Watt Metal Halide Dusk to Dawn Fixture	213	0.213	933	1	New 26 Watt LED Dusk to Dawn Barnyard Fixture	26	0.026	114
LINN RUN STATE PARK	CABIN	9	INTERIOR		LIVING/KITCHEN	1	13 Watt Compact Fluorescent 2-Lamp Fixture	26	0.026	96	1	Re-Lamp with (2) 10 Watt LED A19	20	0.020	74
LINN RUN STATE PARK	CABIN	9	INTERIOR		LIVING/KITCHEN	1	T12 1x4 2-Lamp Wrap Fixture	72	0.072	267	1	Retrofit with (2) 12.5 Watt LED T8 4' Lamps; Direct Wire to Socket	25	0.025	93
LINN RUN STATE PARK	CABIN	9	INTERIOR		LIVING/KITCHEN	1	T12 2x2 2-Lamp Wrap Fixture	42	0.042	156	1	Retrofit with (2) 10 Watt LED T8 2' Lamps; Direct Wire to Socket	20	0.020	74
LINN RUN STATE PARK	CABIN	9	INTERIOR		BEDROOM	1	13 Watt Compact Fluorescent 2-Lamp Fixture	26	0.026	96	1	Re-Lamp with (2) 10 Watt LED A19	20	0.020	74
LINN RUN STATE PARK	CABIN	9	INTERIOR		BEDROOM	1	13 Watt Compact Fluorescent 2-Lamp Fixture	26	0.026	96	1	Re-Lamp with (2) 10 Watt LED A19	20	0.020	74
LINN RUN STATE PARK	CABIN	9	EXTERIOR		EXTERIOR	1	13 Watt Compact Fluorescent Fixture	13	0.013	57	1	Re-Lamp with (1) 10 Watt LED A19	10	0.010	44
LINN RUN STATE PARK	LATRINE	6	INTERIOR		MENS RESTROOM	1	23 Watt Compact Fluorescent Fixture	23	0.023	85	1	Re-Lamp with (1) 10 Watt LED A19	10	0.010	37
LINN RUN STATE PARK	LATRINE	6	INTERIOR		WOMENS RESTROOM	1	23 Watt Compact Fluorescent Fixture	23	0.023	85	1	Re-Lamp with (1) 10 Watt LED A19	10	0.010	37
LINN RUN STATE PARK	LATRINE	6	EXTERIOR		EXTERIOR	1	175 Watt Metal Halide Dusk to Dawn Fixture	213	0.213	933	1	New 26 Watt LED Dusk to Dawn Barnyard Fixture	26	0.026	114
LINN RUN STATE PARK	CABIN	10	INTERIOR		LIVING ROOM	1	Existing LED Fixture; No Retrofit	30	0.030	111	1	No Retrofit	30	0.030	111
LINN RUN STATE PARK	CABIN	10	INTERIOR		LIVING ROOM	2	Existing LED Fixture; No Retrofit	10	0.020	74	2	No Retrofit	10	0.020	74
LINN RUN STATE PARK	CABIN	10	INTERIOR		BEDROOM	1	13 Watt Compact Fluorescent 2-Lamp Fixture	26	0.026	96	1	Re-Lamp with (2) 10 Watt LED A19	20	0.020	74
LINN RUN STATE PARK	CABIN	10	INTERIOR		KITCHEN	5	Existing LED Fixture; No Retrofit	10	0.050	185	5	No Retrofit	10	0.050	185
LINN RUN STATE PARK	CABIN	10	INTERIOR		BEDROOM	1	Existing LED Fixture; No Retrofit	20	0.020	74	1	No Retrofit	20	0.020	74
LINN RUN STATE PARK	CABIN	10	EXTERIOR		EXTERIOR	1	13 Watt Compact Fluorescent Fixture	13	0.013	57	1	Re-Lamp with (1) 10 Watt LED A19	10	0.010	44

©2013 Energy Systems Group, LLC

EXISTING FIXTURES												PROPOSED FIXTURE UPGRADE			
Park/Building Name	Building	Building #	Phase	Floor	Room Description	Qty	Description	Watts	kW	kWh	Qty	Description	Watts	kW	kWh
LINN RUN STATE PARK	CABIN	7	INTERIOR		HALLWAY	1	13 Watt Compact Fluorescent Fixture	13	0.013	48	1	Re-Lamp with (1) 10 Watt LED A19	10	0.010	37
LINN RUN STATE PARK	CABIN	7	INTERIOR		BEDROOM	1	23 Watt Compact Fluorescent Fixture	23	0.023	85	1	Re-Lamp with (1) 10 Watt LED A19	10	0.010	37
LINN RUN STATE PARK	CABIN	7	INTERIOR		BATHROOM	1	23 Wat Compact Fluorescent 3-Lamp Fixture	69	0.069	256	1	Re-Lamp with (3) 10 Watt LED A19	30	0.030	111
LINN RUN STATE PARK	CABIN	7	INTERIOR		BATHROOM	1	23 Wat Compact Fluorescent 3-Lamp Fixture	69	0.069	256	1	Re-Lamp with (3) 10 Watt LED A19	30	0.030	111
LINN RUN STATE PARK	CABIN	7	INTERIOR		BATHROOM	1	13 Watt Compact Fluorescent 4-Lamp Fixture	52	0.052	193	1	Re-Lamp with (4) 10 Watt LED A19	40	0.040	148
LINN RUN STATE PARK	CABIN	7	INTERIOR		LIVING ROOM	2	13 Watt Compact Fluorescent 2-Lamp Fixture	26	0.052	193	2	Re-Lamp with (2) 10 Watt LED A19	20	0.040	148
LINN RUN STATE PARK	CABIN	7	INTERIOR		LIVING ROOM	1	13 Watt Compact Fluorescent 3-Lamp Fixture	39	0.039	144	1	Re-Lamp with (3) 10 Watt LED A19	30	0.030	111
LINN RUN STATE PARK	CABIN	7	INTERIOR		KITCHEN	1	13 Watt Compact Fluorescent 2-Lamp Fixture	26	0.026	96	1	Re-Lamp with (2) 10 Watt LED A19	20	0.020	74
LINN RUN STATE PARK	CABIN	7	INTERIOR		KITCHEN	2	13 Watt Compact Fluorescent Fixture	13	0.026	96	2	Re-Lamp with (1) 10 Watt LED A19	10	0.020	74
LINN RUN STATE PARK	CABIN	7	INTERIOR		KITCHEN	1	13 Watt Compact Fluorescent 4-Lamp Fixture	52	0.052	193	1	Re-Lamp with (4) 10 Watt LED A19	40	0.040	148
LINN RUN STATE PARK	CABIN	7	EXTERIOR		EXTERIOR	1	13 Watt Compact Fluorescent Fixture	13	0.013	57	1	Re-Lamp with (1) 10 Watt LED A19	10	0.010	44
LINN RUN STATE PARK	CABIN	5	INTERIOR		KITCHEN	1	T12 1x4 2-Lamp Wrap Fixture	72	0.072	267	1	Retrofit with (2) 12.5 Watt LED T8 4' Lamps; Direct Wire to Socket	25	0.025	93
LINN RUN STATE PARK	CABIN	5	INTERIOR		KITCHEN	1	T12 1x4 2-Lamp Wrap Fixture	72	0.072	267	1	Retrofit with (2) 12.5 Watt LED T8 4' Lamps; Direct Wire to Socket	25	0.025	93
LINN RUN STATE PARK	CABIN	5	INTERIOR		BEDROOM	1	13 Watt Compact Fluorescent 2-Lamp Fixture	26	0.026	96	1	Re-Lamp with (2) 10 Watt LED A19	20	0.020	74
LINN RUN STATE PARK	CABIN	4	INTERIOR		LIVING/KITCHEN	2	13 Watt Compact Fluorescent 2-Lamp Fixture	26	0.052	193	2	Re-Lamp with (2) 10 Watt LED A19	20	0.040	148
LINN RUN STATE PARK	CABIN	4	INTERIOR		HALL/BEDROOM	2	13 Watt Compact Fluorescent 2-Lamp Fixture	26	0.052	193	2	Re-Lamp with (2) 10 Watt LED A19	20	0.040	148
LINN RUN STATE PARK	CABIN	4	INTERIOR		BEDROOM	1	13 Watt Compact Fluorescent 2-Lamp Fixture	26	0.026	96	1	Re-Lamp with (2) 10 Watt LED A19	20	0.020	74
LINN RUN STATE PARK	CABIN	4	EXTERIOR		EXTERIOR	1	13 Watt Compact Fluorescent Fixture	13	0.013	57	1	Re-Lamp with (1) 10 Watt LED A19	10	0.010	44
LINN RUN STATE PARK	CABIN	8	INTERIOR		OCCUPIED - N/A	1	Occupied/No Access; Area(s) Not Included in Scope/Pricing	0	0.000	0	1	No Retrofit	0	0.000	0
LINN RUN STATE PARK	CABIN	6	INTERIOR		OCCUPIED - N/A	1	Occupied/No Access; Area(s) Not Included in Scope/Pricing	0	0.000	0	1	No Retrofit	0	0.000	0
LINN RUN STATE PARK	CABIN	3	INTERIOR		KITCHEN	1	23 Watt Compact Fluorescent 5-Lamp Fixture	115	0.115	426	1	Re-Lamp with (5) 10 Watt LED A19	50	0.050	185
LINN RUN STATE PARK	CABIN	3	INTERIOR		KITCHEN	1	13 Watt Compact Fluorescent 3-Lamp Fixture	39	0.039	144	1	Re-Lamp with (3) 10 Watt LED A19	30	0.030	111
LINN RUN STATE PARK	CABIN	3	INTERIOR		KITCHEN	1	13 Watt Compact Fluorescent 3-Lamp Fixture	39	0.039	144	1	Re-Lamp with (3) 10 Watt LED A19	30	0.030	111
LINN RUN STATE PARK	CABIN	3	INTERIOR		BEDROOM	1	13 Watt Compact Fluorescent 2-Lamp Fixture	26	0.026	96	1	Re-Lamp with (2) 10 Watt LED A19	20	0.020	74
LINN RUN STATE PARK	CABIN	3	EXTERIOR		EXTERIOR	1	13 Watt Compact Fluorescent Fixture	13	0.013	57	1	Re-Lamp with (1) 10 Watt LED A19	10	0.010	44
LINN RUN STATE PARK	CABIN	1	INTERIOR		LIVING/KITCHEN	2	23 Watt Compact Fluorescent 2-Lamp Fixture	46	0.092	341	2	Re-Lamp with (2) 10 Watt LED A19	20	0.040	148

©2013 Energy Systems Group, LLC

EXISTING FIXTURES											PROPOSED FIXTURE UPGRADE				
Park/Building Name	Building	Building #	Phase	Floor	Room Description	Qty	Description	Watts	kW	kWh	Qty	Description	Watts	kW	kWh
LINN RUN STATE PARK	CABIN	1	INTERIOR		BEDROOM	1	23 Watt Compact Fluorescent 2-Lamp Fixture	46	0.046	170	1	Re-Lamp with (2) 10 Watt LED A19	20	0.020	74
LINN RUN STATE PARK	CABIN	1	EXTERIOR		EXTERIOR	1	13 Watt Compact Fluorescent Fixture	13	0.013	57	1	Re-Lamp with (1) 10 Watt LED A19	10	0.010	44
LINN RUN STATE PARK	CABIN	3	INTERIOR		NO DATA	1	No Data: Area(s) Not Included in Scope/Pricing	0	0.000	0	1	No Retrofit	0	0.000	0
LINN RUN STATE PARK	CABIN	2	INTERIOR		LIVING&KITCHEN	2	23 Wat Compact Fluorescent 3-Lamp Fixture	69	0.138	511	2	Re-Lamp with (3) 10 Watt LED A19	30	0.060	222
LINN RUN STATE PARK	CABIN	2	INTERIOR		HALLWAY	1	13 Watt Compact Fluorescent 2-Lamp Fixture	26	0.026	96	1	Re-Lamp with (2) 10 Watt LED A19	20	0.020	74
LINN RUN STATE PARK	CABIN	2	INTERIOR		BEDROOM	1	13 Watt Compact Fluorescent 2-Lamp Fixture	26	0.026	96	1	Re-Lamp with (2) 10 Watt LED A19	20	0.020	74
LINN RUN STATE PARK	CABIN	2	INTERIOR		BEDROOM	1	13 Watt Compact Fluorescent 2-Lamp Fixture	26	0.026	96	1	Re-Lamp with (2) 10 Watt LED A19	20	0.020	74
LINN RUN STATE PARK	CABIN	2	EXTERIOR		EXTERIOR	1	13 Watt Compact Fluorescent Fixture	13	0.013	57	1	Re-Lamp with (1) 10 Watt LED A19	10	0.010	44
LINN RUN STATE PARK	BIG SHOP		INTERIOR	1	SHOP	7	T12 1x8 2-Lamp Strip Fixture with 60 Watt Lamps	123	0.861	2,239	7	Retrofit with (4) 12.5 Watt LED T8 4' Lamps and (1) 1x8 4-Lamp Strip Kit; Direct Wire to Socket	50	0.350	910
LINN RUN STATE PARK	BIG SHOP		INTERIOR	1	SHOP	2	23 Watt Compact Fluorescent Fixture	23	0.046	120	2	Re-Lamp with (1) 10 Watt LED A19	10	0.020	52
LINN RUN STATE PARK	BIG SHOP		INTERIOR	1	RESTROOM	1	23 Watt Compact Fluorescent Fixture	23	0.023	12	1	Re-Lamp with (1) 10 Watt LED A19	10	0.010	5
LINN RUN STATE PARK	BIG SHOP		INTERIOR	1	RESTROOM	1	23 Watt Compact Fluorescent 2-Lamp Fixture	46	0.046	24	1	Re-Lamp with (2) 10 Watt LED A19	20	0.020	10
LINN RUN STATE PARK	BIG SHOP		INTERIOR	1	GARAGE	2	23 Watt Compact Fluorescent Fixture	23	0.046	120	2	Re-Lamp with (1) 10 Watt LED A19	10	0.020	52
LINN RUN STATE PARK	BIG SHOP		INTERIOR	1	GARAGE	1	90 Watt Incandescent PAR38 2-Lamp Fixture	180	0.180	468	1	Re-Lamp with (2) 17 Watt LED PAR38	34	0.034	88
LINN RUN STATE PARK	BIG SHOP		INTERIOR	1	STAIRS	1	23 Watt Compact Fluorescent Fixture	23	0.023	60	1	Re-Lamp with (1) 10 Watt LED A19	10	0.010	26
LINN RUN STATE PARK	BIG SHOP		INTERIOR	2	CLOSET	1	T12 1x4 4-Lamp Wrap Fixture; Damaged	144	0.144	144	1	New 1x8 2-Lamp Wrap Fixture with (4) 12.5 Watt LED T8 4' Lamps; Direct Wire to Socket	50	0.050	50
LINN RUN STATE PARK	BIG SHOP		INTERIOR	2	MAIN STORAGE	5	T12 1x8 2-Lamp Strip Fixture with 60 Watt Lamps	123	0.615	615	5	Retrofit with (4) 12.5 Watt LED T8 4' Lamps and (1) 1x8 4-Lamp Strip Kit; Direct Wire to Socket	50	0.250	250
LINN RUN STATE PARK	BIG SHOP		INTERIOR	2	MAIN STORAGE	1	T12 2x4 4-Lamp Troffer Fixture	144	0.144	144	1	Retrofit with (4) 12.5 Watt LED T8 4' Lamps; Direct Wire to Socket	50	0.050	50
LINN RUN STATE PARK	BIG SHOP		INTERIOR	3	ATTIC	4	23 Watt Compact Fluorescent Fixture	23	0.092	92	4	Re-Lamp with (1) 10 Watt LED A19	10	0.040	40
LINN RUN STATE PARK	BIG SHOP		EXTERIOR		EXTERIOR	1	60 Watt Incandescent A-Lamp Fixture	60	0.060	263	1	Re-Lamp with (1) 10 Watt LED A19	10	0.010	44
LINN RUN STATE PARK	BIG SHOP		EXTERIOR		EXTERIOR	1	75 Watt Incandescent PAR38 2-Lamp	150	0.150	657	1	Re-Lamp with (2) 17 Watt LED PAR38	34	0.034	149
LINN RUN STATE PARK	ROADSIDE SPRING CHLORINATOR BUILDING		INTERIOR		ROADSIDE SPRING CHLORINATOR BUILDING	1	75 Watt Incandescent A-Lamp Fixture	75	0.075	195	1	Re-Lamp with (1) 10 Watt LED A19	10	0.010	26
LINN RUN STATE PARK	ADAM FALLS WELL BUILDING		INTERIOR		ADAM FALLS WELL BUILDING	1	75 Watt Incandescent A-Lamp Fixture	75	0.075	195	1	Re-Lamp with (1) 10 Watt LED A19	10	0.010	26
LINN RUN STATE PARK	LATRINE	15	INTERIOR		LATRINE	1	No Lights; Area(s) Not Included in Scope/Pricing	0	0.000	0	1	No Retrofit	0	0.000	0
LINN RUN STATE PARK	GROVE RUN LATRINE		INTERIOR		GROVE RUN LATRINE	1	No Lights; Area(s) Not Included in Scope/Pricing	0	0.000	0	1	No Retrofit	0	0.000	0
LINN RUN STATE PARK	PICNIC SHELTER		INTERIOR		PICNIC SHELTER	1	No Lights; Area(s) Not Included in Scope/Pricing	0	0.000	0	1	No Retrofit	0	0.000	0

©2013 Energy Systems Group, LLC

EXISTING FIXTURES											PROPOSED FIXTURE UPGRADE				
Park/Building Name	Building	Building #	Phase	Floor	Room Description	Qty	Description	Watts	kW	kWh	Qty	Description	Watts	kW	kWh
RACCOON CREEK PARK	CABINS OGC1	11-11	INTERIOR		UNIT 1 CABIN 11-11	1	23 Watt Compact Fluorescent Fixture	23	0.023	85	1	Re-Lamp with (1) 10 Watt LED A19	10	0.010	37
RACCOON CREEK PARK	CABINS OGC1	11-18	INTERIOR		UNIT 1 CABIN 11-18	1	23 Watt Compact Fluorescent Fixture	23	0.023	85	1	Re-Lamp with (1) 10 Watt LED A19	10	0.010	37
RACCOON CREEK PARK	CABINS OGC1	11-14	INTERIOR		UNIT 1 CABIN 11-14	1	23 Watt Compact Fluorescent Fixture	23	0.023	85	1	Re-Lamp with (1) 10 Watt LED A19	10	0.010	37
RACCOON CREEK PARK	CABINS OGC1	11-13	INTERIOR		UNIT 1 CABIN 11-13	1	23 Watt Compact Fluorescent Fixture	23	0.023	85	1	Re-Lamp with (1) 10 Watt LED A19	10	0.010	37
RACCOON CREEK PARK	CABINS OGC1	11-12	INTERIOR		UNIT 1 CABIN 11-12	1	23 Watt Compact Fluorescent Fixture	23	0.023	85	1	Re-Lamp with (1) 10 Watt LED A19	10	0.010	37
RACCOON CREEK PARK	CABINS OGC1	11-16	INTERIOR		UNIT 1 CABIN 11-16	1	23 Watt Compact Fluorescent Fixture	23	0.023	85	1	Re-Lamp with (1) 10 Watt LED A19	10	0.010	37
RACCOON CREEK PARK	CABINS OGC1	11-17	INTERIOR		UNIT 1 CABIN 11-17	1	23 Watt Compact Fluorescent Fixture	23	0.023	85	1	Re-Lamp with (1) 10 Watt LED A19	10	0.010	37
RACCOON CREEK PARK	CABINS OGC3	11-38	INTERIOR		UNIT 3 CABIN 11-38	1	23 Watt Compact Fluorescent Fixture	23	0.023	85	1	Re-Lamp with (1) 10 Watt LED A19	10	0.010	37
RACCOON CREEK PARK	CABINS OGC3	11-34	INTERIOR		UNIT 3 CABIN 11-34	1	23 Watt Compact Fluorescent Fixture	23	0.023	85	1	Re-Lamp with (1) 10 Watt LED A19	10	0.010	37
RACCOON CREEK PARK	CABINS OGC3	11-32	INTERIOR		UNIT 3 CABIN 11-32	1	23 Watt Compact Fluorescent Fixture	23	0.023	85	1	Re-Lamp with (1) 10 Watt LED A19	10	0.010	37
RACCOON CREEK PARK	CABINS OGC3	11-35	INTERIOR		UNIT 3 CABIN 11-35	1	23 Watt Compact Fluorescent Fixture	23	0.023	85	1	Re-Lamp with (1) 10 Watt LED A19	10	0.010	37
RACCOON CREEK PARK	CABINS OGC3	11-37	INTERIOR		UNIT 3 CABIN 11-37	1	23 Watt Compact Fluorescent Fixture	23	0.023	85	1	Re-Lamp with (1) 10 Watt LED A19	10	0.010	37
RACCOON CREEK PARK	CABINS OGC3	11-31	INTERIOR		UNIT 3 CABIN 11-31	1	23 Watt Compact Fluorescent Fixture	23	0.023	85	1	Re-Lamp with (1) 10 Watt LED A19	10	0.010	37
RACCOON CREEK PARK	CABINS OGC3	11-36	INTERIOR		UNIT 3 CABIN 11-36	1	23 Watt Compact Fluorescent Fixture	23	0.023	85	1	Re-Lamp with (1) 10 Watt LED A19	10	0.010	37
RACCOON CREEK PARK	CABINS OGC3	11-33	INTERIOR		UNIT 3 CABIN 11-33	1	23 Watt Compact Fluorescent Fixture	23	0.023	85	1	Re-Lamp with (1) 10 Watt LED A19	10	0.010	37
RACCOON CREEK PARK	MAINTENANCE WELD SHOP	2-7	INTERIOR		SHOP	8	23 Watt Compact Fluorescent Fixture	23	0.184	479	8	Re-Lamp with (1) 10 Watt LED A19	10	0.080	208
RACCOON CREEK PARK	MAINTENANCE WELD SHOP	2-7	INTERIOR		SHOP	1	T12 1x4 2-Lamp Industrial Strip Fixture	72	0.072	187	1	Retrofit with (2) 12.5 Watt LED T8 4' Lamps; Direct Wire to Socket	25	0.025	65
RACCOON CREEK PARK	MAINTENANCE WELD SHOP	2-7	INTERIOR		STORAGE	2	23 Watt Compact Fluorescent Fixture	23	0.046	46	2	Re-Lamp with (1) 10 Watt LED A19	10	0.020	20
RACCOON CREEK PARK	MAINTENANCE WELD SHOP	2-7	INTERIOR		STORAGE	1	90 Watt Incandescent PAR38 Fixture	90	0.090	90	1	Re-Lamp with (1) 17 Watt LED PAR38	17	0.017	17
RACCOON CREEK PARK	MAINTENANCE WELD SHOP	2-7	EXTERIOR		EXTERIOR	1	175 Watt Mercury Vapor Dusk to Dawn Fixture	210	0.210	920	1	New 26 Watt LED Dusk to Dawn Barnyard Fixture	26	0.026	114
RACCOON CREEK PARK	BEACH BATH HOUSE	8-2	INTERIOR		OFFICE	4	T12 1x4 2-Lamp Wrap Fixture	72	0.288	795	4	Retrofit with (2) 12.5 Watt LED T8 4' Lamps; Direct Wire to Socket	25	0.100	276
RACCOON CREEK PARK	BEACH BATH HOUSE	8-2	INTERIOR		OFFICE	2	23 Watt Compact Fluorescent Downlight	23	0.046	127	2	Re-Lamp with (1) 10 Watt LED BR30	10	0.020	55
RACCOON CREEK PARK	BEACH BATH HOUSE	8-2	INTERIOR		JANITOR	1	T12 1x4 2-Lamp Wrap Fixture	72	0.072	72	1	Retrofit with (2) 12.5 Watt LED T8 4' Lamps; Direct Wire to Socket	25	0.025	25
RACCOON CREEK PARK	BEACH BATH HOUSE	8-2	INTERIOR		LOCKERS	2	23 Watt Compact Fluorescent Downlight	23	0.046	127	2	Re-Lamp with (1) 10 Watt LED BR30	10	0.020	55
RACCOON CREEK PARK	BEACH BATH HOUSE	8-2	INTERIOR		RESTROOM	1	T12 1x4 2-Lamp Wrap Fixture	72	0.072	199	1	Retrofit with (2) 12.5 Watt LED T8 4' Lamps; Direct Wire to Socket	25	0.025	69
RACCOON CREEK PARK	BEACH BATH HOUSE	8-2	INTERIOR		BOAT BAY	2	23 Watt Compact Fluorescent Canopy Fixture	23	0.046	127	2	Re-Lamp with (1) 10 Watt LED A19	10	0.020	55

©2013 Energy Systems Group, LLC

EXISTING FIXTURES												PROPOSED FIXTURE UPGRADE				
Park/Building Name	Building	Building #	Phase	Floor	Room Description	Qty	Description	Watts	kW	kWh	Qty	Description	Watts	kW	kWh
RACCOON CREEK PARK	BEACH BATH HOUSE	8-2	INTERIOR		MENS RESTROOM	1	No Lights; Area(s) Not Included in Scope/Pricing	0	0.000	0	1	No Retrofit	0	0.000	0
RACCOON CREEK PARK	BEACH BATH HOUSE	8-2	INTERIOR		WOMENS RESTROOM	1	No Lights; Area(s) Not Included in Scope/Pricing	0	0.000	0	1	No Retrofit	0	0.000	0
RACCOON CREEK PARK	BEACH BATH HOUSE	8-2	EXTERIOR		EXTERIOR	6	23 Watt Compact Fluorescent Canopy Fixture	23	0.138	199	6	New 10 Watt LED Canopy Fixture	12	0.072	104
RACCOON CREEK PARK	OGC 3 WASH HOUSE	13-19	INTERIOR		WASH HOUSE	4	23 Watt Compact Fluorescent Fixture	23	0.092	421	4	Re-Lamp with (1) 10 Watt LED A19	10	0.040	183
RACCOON CREEK PARK	WASH HOUSE A/B LOOP	4-2	INTERIOR		MENS RESTROOM	2	T12 1x4 2-Lamp Vanity Fixture; Damaged	72	0.144	660	2	New 1x4 2-Lamp Vanity Fixture with (2) 12.5 Watt LED T8 4' Lamp; Direct Wire to Socket	25	0.050	229
RACCOON CREEK PARK	WASH HOUSE A/B LOOP	4-2	INTERIOR		MENS RESTROOM	2	T12 1x4 2-Lamp Vaportight Fixture; Damaged	72	0.144	660	2	New 1x4 2-Lamp Vaportight Fixture with (2) 12.5 Watt LED T8 4' Lamp; Direct Wire to Socket	25	0.050	229
RACCOON CREEK PARK	WASH HOUSE A/B LOOP	4-2	INTERIOR		MENS RESTROOM	2	23 Watt Compact Fluorescent 2-Lamp Fixture	46	0.092	421	2	Re-Lamp with (2) 10 Watt LED A19	20	0.040	183
RACCOON CREEK PARK	WASH HOUSE A/B LOOP	4-2	INTERIOR		MECHANICAL	4	23 Watt Compact Fluorescent Canopy Fixture	23	0.092	421	4	Re-Lamp with (1) 10 Watt LED A19	10	0.040	183
RACCOON CREEK PARK	WASH HOUSE A/B LOOP	4-2	INTERIOR		WOMENS RESTROOM	2	T12 1x4 2-Lamp Vanity Fixture; Damaged	72	0.144	660	2	New 1x4 2-Lamp Vanity Fixture with (2) 12.5 Watt LED T8 4' Lamp; Direct Wire to Socket	25	0.050	229
RACCOON CREEK PARK	WASH HOUSE A/B LOOP	4-2	INTERIOR		WOMENS RESTROOM	2	T12 1x4 2-Lamp Vaportight Fixture; Damaged	72	0.144	660	2	New 1x4 2-Lamp Vaportight Fixture with (2) 12.5 Watt LED T8 4' Lamp; Direct Wire to Socket	25	0.050	229
RACCOON CREEK PARK	WASH HOUSE A/B LOOP	4-2	EXTERIOR		EXTERIOR	2	23 Watt Compact Fluorescent Wall Pack Fixture	23	0.046	66	2	New 24 Watt LED Wall Pack Fixture; Non-Dark Sky	25	0.050	72
RACCOON CREEK PARK	WASH HOUSE A/B LOOP	4-2	EXTERIOR		EXTERIOR	2	23 Watt Compact Fluorescent Canopy Fixture	23	0.046	66	2	New 10 Watt LED Canopy Fixture	12	0.024	35
RACCOON CREEK PARK	WASH HOUSE E	4-5	INTERIOR		MENS RESTROOM	2	T12 1x4 2-Lamp Vanity Fixture; Damaged	72	0.144	660	2	New 1x4 2-Lamp Vanity Fixture with (2) 12.5 Watt LED T8 4' Lamp; Direct Wire to Socket	25	0.050	229
RACCOON CREEK PARK	WASH HOUSE E	4-5	INTERIOR		MENS RESTROOM	2	T12 1x4 2-Lamp Vaportight Fixture; Damaged	72	0.144	660	2	New 1x4 2-Lamp Vaportight Fixture with (2) 12.5 Watt LED T8 4' Lamp; Direct Wire to Socket	25	0.050	229
RACCOON CREEK PARK	WASH HOUSE E	4-5	INTERIOR		MENS RESTROOM	2	23 Watt Compact Fluorescent 2-Lamp Fixture	46	0.092	421	2	Re-Lamp with (2) 10 Watt LED A19	20	0.040	183
RACCOON CREEK PARK	WASH HOUSE E	4-5	INTERIOR		MECHANICAL	4	23 Watt Compact Fluorescent Canopy Fixture	23	0.092	421	4	Re-Lamp with (1) 10 Watt LED A19	10	0.040	183
RACCOON CREEK PARK	WASH HOUSE E	4-5	INTERIOR		WOMENS RESTROOM	2	T12 1x4 2-Lamp Vanity Fixture; Damaged	72	0.144	660	2	New 1x4 2-Lamp Vanity Fixture with (2) 12.5 Watt LED T8 4' Lamp; Direct Wire to Socket	25	0.050	229
RACCOON CREEK PARK	WASH HOUSE E	4-5	INTERIOR		WOMENS RESTROOM	2	T12 1x4 2-Lamp Vaportight Fixture; Damaged	72	0.144	660	2	New 1x4 2-Lamp Vaportight Fixture with (2) 12.5 Watt LED T8 4' Lamp; Direct Wire to Socket	25	0.050	229
RACCOON CREEK PARK	WASH HOUSE E	4-5	EXTERIOR		EXTERIOR	2	23 Watt Compact Fluorescent Wall Pack Fixture	23	0.046	66	2	New 24 Watt LED Wall Pack Fixture; Non-Dark Sky	25	0.050	72
RACCOON CREEK PARK	WASH HOUSE E	4-5	EXTERIOR		EXTERIOR	2	23 Watt Compact Fluorescent Canopy Fixture	23	0.046	66	2	New 10 Watt LED Canopy Fixture	12	0.024	35
RACCOON CREEK PARK	CONTACT STATION	4-1	INTERIOR		OFFICE	3	Existing LED Fixture; No Retrofit	45	0.135	373	3	No Retrofit	45	0.135	373
RACCOON CREEK PARK	CONTACT STATION	4-1	INTERIOR		RESTROOM	1	T8 1x4 2-Lamp Vanity Fixture	62	0.062	171	1	Retrofit with (2) 12.5 Watt LED T8 4' Lamps; Direct Wire to Socket	25	0.025	69
RACCOON CREEK PARK	CONTACT STATION	4-1	INTERIOR		DISPLAY	1	T8 1x4 1-Lamp Strip Fixture	30	0.030	83	1	Retrofit with (1) 12.5 Watt LED T8 4' Lamps; Direct Wire to Socket	12.5	0.013	35
RACCOON CREEK PARK	CONTACT STATION	4-1	INTERIOR		HALLWAY	4	Existing LED Fixture; No Retrofit	30	0.120	331	4	No Retrofit	30	0.120	331
RACCOON CREEK PARK	CONTACT STATION	4-1	INTERIOR		MECHANICAL	1	T8 1x4 2-Lamp Wrap Fixture	62	0.062	171	1	Retrofit with (2) 12.5 Watt LED T8 4' Lamps; Direct Wire to Socket	25	0.025	69
RACCOON CREEK PARK	CONTACT STATION	4-1	EXTERIOR		EXTERIOR	1	23 Wat Compact Fluorescent 3-Lamp Fixture	69	0.069	99	1	Re-Lamp with (3) 10 Watt LED A19	30	0.030	43

©2013 Energy Systems Group, LLC

EXISTING FIXTURES												PROPOSED FIXTURE UPGRADE				
Park/Building Name	Building	Building #	Phase	Floor	Room Description	Qty	Description	Watts	kW	kWh	Qty	Description	Watts	kW	kWh
RACCOON CREEK PARK	CONTACT STATION	4-1	EXTERIOR		EXTERIOR	5	Existing LED Fixture; No Retrofit	10	0.050	72	5	No Retrofit	10	0.050	72
RACCOON CREEK PARK	CONTACT STATION	4-1	EXTERIOR		EXTERIOR	2	Existing LED Fixture; No Retrofit	10	0.020	29	2	No Retrofit	10	0.020	29
RACCOON CREEK PARK	CONTACT STATION	4-1	EXTERIOR		EXTERIOR	1	Existing LED Fixture; No Retrofit	20	0.020	29	1	No Retrofit	20	0.020	29
RACCOON CREEK PARK	WASH HOUSE D	4-4	INTERIOR		MENS RESTROOM	2	T12 1x4 2-Lamp Vanity Fixture; Damaged	72	0.144	660	2	New 1x4 2-Lamp Vanity Fixture with (2) 12.5 Watt LED T8 4' Lamp; Direct Wire to Socket	25	0.050	229
RACCOON CREEK PARK	WASH HOUSE D	4-4	INTERIOR		MENS RESTROOM	2	T12 1x4 2-Lamp Vaportight Fixture; Damaged	72	0.144	660	2	New 1x4 2-Lamp Vaportight Fixture with (2) 12.5 Watt LED T8 4' Lamp; Direct Wire to Socket	25	0.050	229
RACCOON CREEK PARK	WASH HOUSE D	4-4	INTERIOR		MENS RESTROOM	2	23 Watt Compact Fluorescent 2-Lamp Fixture	46	0.092	421	2	Re-Lamp with (2) 10 Watt LED A19	20	0.040	183
RACCOON CREEK PARK	WASH HOUSE D	4-4	INTERIOR		MECHANICAL	4	23 Watt Compact Fluorescent Canopy Fixture	23	0.092	421	4	Re-Lamp with (1) 10 Watt LED A19	10	0.040	183
RACCOON CREEK PARK	WASH HOUSE D	4-4	INTERIOR		WOMENS RESTROOM	2	T12 1x4 2-Lamp Vanity Fixture; Damaged	72	0.144	660	2	New 1x4 2-Lamp Vanity Fixture with (2) 12.5 Watt LED T8 4' Lamp; Direct Wire to Socket	25	0.050	229
RACCOON CREEK PARK	WASH HOUSE D	4-4	INTERIOR		WOMENS RESTROOM	2	T12 1x4 2-Lamp Vaportight Fixture; Damaged	72	0.144	660	2	New 1x4 2-Lamp Vaportight Fixture with (2) 12.5 Watt LED T8 4' Lamp; Direct Wire to Socket	25	0.050	229
RACCOON CREEK PARK	WASH HOUSE D	4-4	EXTERIOR		EXTERIOR	2	23 Watt Compact Fluorescent Wall Pack Fixture	23	0.046	66	2	New 24 Watt LED Wall Pack Fixture; Non-Dark Sky	25	0.050	72
RACCOON CREEK PARK	WASH HOUSE D	4-4	EXTERIOR		EXTERIOR	2	23 Watt Compact Fluorescent Canopy Fixture	23	0.046	66	2	New 10 Watt LED Canopy Fixture	12	0.024	35
RACCOON CREEK PARK	WASH HOUSE C	4-3	INTERIOR		MENS RESTROOM	2	T12 1x4 2-Lamp Vanity Fixture; Damaged	72	0.144	660	2	New 1x4 2-Lamp Vanity Fixture with (2) 12.5 Watt LED T8 4' Lamp; Direct Wire to Socket	25	0.050	229
RACCOON CREEK PARK	WASH HOUSE C	4-3	INTERIOR		MENS RESTROOM	2	T12 1x4 2-Lamp Vaportight Fixture; Damaged	72	0.144	660	2	New 1x4 2-Lamp Vaportight Fixture with (2) 12.5 Watt LED T8 4' Lamp; Direct Wire to Socket	25	0.050	229
RACCOON CREEK PARK	WASH HOUSE C	4-3	INTERIOR		MENS RESTROOM	2	23 Watt Compact Fluorescent 2-Lamp Fixture	46	0.092	421	2	Re-Lamp with (2) 10 Watt LED A19	20	0.040	183
RACCOON CREEK PARK	WASH HOUSE C	4-3	INTERIOR		MECHANICAL	4	23 Watt Compact Fluorescent Canopy Fixture	23	0.092	421	4	Re-Lamp with (1) 10 Watt LED A19	10	0.040	183
RACCOON CREEK PARK	WASH HOUSE C	4-3	INTERIOR		WOMENS RESTROOM	2	T12 1x4 2-Lamp Vanity Fixture; Damaged	72	0.144	660	2	New 1x4 2-Lamp Vanity Fixture with (2) 12.5 Watt LED T8 4' Lamp; Direct Wire to Socket	25	0.050	229
RACCOON CREEK PARK	WASH HOUSE C	4-3	INTERIOR		WOMENS RESTROOM	2	T12 1x4 2-Lamp Vaportight Fixture; Damaged	72	0.144	660	2	New 1x4 2-Lamp Vaportight Fixture with (2) 12.5 Watt LED T8 4' Lamp; Direct Wire to Socket	25	0.050	229
RACCOON CREEK PARK	WASH HOUSE C	4-3	EXTERIOR		EXTERIOR	2	23 Watt Compact Fluorescent Wall Pack Fixture	23	0.046	66	2	New 24 Watt LED Wall Pack Fixture; Non-Dark Sky	25	0.050	72
RACCOON CREEK PARK	WASH HOUSE C	4-3	EXTERIOR		EXTERIOR	2	23 Watt Compact Fluorescent Canopy Fixture	23	0.046	66	2	New 10 Watt LED Canopy Fixture	12	0.024	35
RACCOON CREEK PARK	WASH HOUSE F	4-6	INTERIOR		MENS RESTROOM	2	T12 1x4 2-Lamp Vanity Fixture; Damaged	72	0.144	660	2	New 1x4 2-Lamp Vanity Fixture with (2) 12.5 Watt LED T8 4' Lamp; Direct Wire to Socket	25	0.050	229
RACCOON CREEK PARK	WASH HOUSE F	4-6	INTERIOR		MENS RESTROOM	2	T12 1x4 2-Lamp Vaportight Fixture; Damaged	72	0.144	660	2	New 1x4 2-Lamp Vaportight Fixture with (2) 12.5 Watt LED T8 4' Lamp; Direct Wire to Socket	25	0.050	229
RACCOON CREEK PARK	WASH HOUSE F	4-6	INTERIOR		MENS RESTROOM	2	23 Watt Compact Fluorescent 2-Lamp Fixture	46	0.092	421	2	Re-Lamp with (2) 10 Watt LED A19	20	0.040	183
RACCOON CREEK PARK	WASH HOUSE F	4-6	INTERIOR		MECHANICAL	4	23 Watt Compact Fluorescent Canopy Fixture	23	0.092	421	4	Re-Lamp with (1) 10 Watt LED A19	10	0.040	183
RACCOON CREEK PARK	WASH HOUSE F	4-6	INTERIOR		WOMENS RESTROOM	2	T12 1x4 2-Lamp Vanity Fixture; Damaged	72	0.144	660	2	New 1x4 2-Lamp Vanity Fixture with (2) 12.5 Watt LED T8 4' Lamp; Direct Wire to Socket	25	0.050	229
RACCOON CREEK PARK	WASH HOUSE F	4-6	INTERIOR		WOMENS RESTROOM	2	T12 1x4 2-Lamp Vaportight Fixture; Damaged	72	0.144	660	2	New 1x4 2-Lamp Vaportight Fixture with (2) 12.5 Watt LED T8 4' Lamp; Direct Wire to Socket	25	0.050	229
RACCOON CREEK PARK	WASH HOUSE F	4-6	EXTERIOR		EXTERIOR	2	23 Watt Compact Fluorescent Wall Pack Fixture	23	0.046	66	2	New 24 Watt LED Wall Pack Fixture; Non-Dark Sky	25	0.050	72

©2013 Energy Systems Group, LLC

EXISTING FIXTURES												PROPOSED FIXTURE UPGRADE				
Park/Building Name	Building	Building #	Phase	Floor	Room Description	Qty	Description	Watts	kW	kWh	Qty	Description	Watts	kW	kWh
RACCOON CREEK PARK	WASH HOUSE F	4-6	EXTERIOR		EXTERIOR	2	23 Watt Compact Fluorescent Canopy Fixture	23	0.046	66	2	New 10 Watt LED Canopy Fixture	12	0.024	35
RACCOON CREEK PARK	SHOWER HOUSE OGC 1 UNIT 3	11-39	INTERIOR		WOMENS RESTROOM	2	T12 1x4 2-Lamp Wrap Fixture	72	0.144	660	2	Retrofit with (2) 12.5 Watt LED T8 4' Lamps; Direct Wire to Socket	25	0.050	229
RACCOON CREEK PARK	SHOWER HOUSE OGC 1 UNIT 3	11-39	INTERIOR		WOMENS RESTROOM	1	T12 1x4 2-Lamp V-sportlight Fixture	72	0.072	330	1	Retrofit with (2) 12.5 Watt LED T8 4' Lamps; Direct Wire to Socket	25	0.025	115
RACCOON CREEK PARK	SHOWER HOUSE OGC 1 UNIT 3	11-39	INTERIOR		MENS RESTROOM	1	T12 1x4 2-Lamp V-sportlight Fixture	72	0.072	330	1	Retrofit with (2) 12.5 Watt LED T8 4' Lamps; Direct Wire to Socket	25	0.025	115
RACCOON CREEK PARK	SHOWER HOUSE OGC 1 UNIT 3	11-39	INTERIOR		MENS RESTROOM	2	T12 1x4 2-Lamp Wrap Fixture	72	0.144	660	2	Retrofit with (2) 12.5 Watt LED T8 4' Lamps; Direct Wire to Socket	25	0.050	229
RACCOON CREEK PARK	MESS HALL OGC2	12-3	INTERIOR		DINING	18	23 Watt Compact Fluorescent Fixture	23	0.414	931	18	Re-Lamp with (1) 10 Watt LED A19	10	0.180	405
RACCOON CREEK PARK	MESS HALL OGC2	12-3	INTERIOR		KITCHEN	6	23 Watt Compact Fluorescent Fixture	23	0.138	310	6	Re-Lamp with (1) 10 Watt LED A19	10	0.060	135
RACCOON CREEK PARK	MESS HALL OGC2	12-3	INTERIOR		KITCHEN HOOD	6	23 Watt Compact Fluorescent Jelly Jar	23	0.138	310	6	Re-Lamp with (1) 10 Watt LED A19	10	0.060	135
RACCOON CREEK PARK	MESS HALL OGC2	12-3	INTERIOR		STORAGE	1	23 Watt Compact Fluorescent Fixture	23	0.023	52	1	Re-Lamp with (1) 10 Watt LED A19	10	0.010	22
RACCOON CREEK PARK	MESS HALL OGC2	12-3	INTERIOR		HALLWAY	3	23 Watt Compact Fluorescent Fixture	23	0.069	155	3	Re-Lamp with (1) 10 Watt LED A19	10	0.030	67
RACCOON CREEK PARK	MESS HALL OGC2	12-3	INTERIOR		REFRIGERATION ROOM	2	23 Watt Compact Fluorescent Fixture	23	0.046	103	2	Re-Lamp with (1) 10 Watt LED A19	10	0.020	45
RACCOON CREEK PARK	MESS HALL OGC2	12-3	INTERIOR		STORAGE	1	23 Watt Compact Fluorescent Fixture	23	0.023	52	1	Re-Lamp with (1) 10 Watt LED A19	10	0.010	22
RACCOON CREEK PARK	MAINTENANCE BUILDING	2-3	INTERIOR		MAINTENANCE BUILDING	1	Existing LED Fixture; No Retrofit	0	0.000	0	1	No Retrofit	0	0.000	0
RACCOON CREEK PARK	FAMILY CABIN 2	11-52	INTERIOR		KITCHEN	1	23 Watt Compact Fluorescent Fixture	23	0.023	85	1	Re-Lamp with (1) 10 Watt LED A19	10	0.010	37
RACCOON CREEK PARK	FAMILY CABIN 2	11-52	INTERIOR		KITCHEN	1	13 Watt Compact Fluorescent 3-Lamp Fixture	39	0.039	144	1	Re-Lamp with (3) 10 Watt LED A19	30	0.030	111
RACCOON CREEK PARK	FAMILY CABIN 2	11-52	INTERIOR		SINK	1	1-Lamp F15 Undercabinet; No Retrofit	15	0.015	56	1	No Retrofit	15	0.015	56
RACCOON CREEK PARK	FAMILY CABIN 2	11-52	INTERIOR		HALLWAY	1	13 Watt Compact Fluorescent 2-Lamp Fixture	26	0.026	96	1	Re-Lamp with (2) 10 Watt LED A19	20	0.020	74
RACCOON CREEK PARK	FAMILY CABIN 2	11-52	INTERIOR		BEDROOM	1	13 Watt Compact Fluorescent 2-Lamp Fixture	26	0.026	96	1	Re-Lamp with (2) 10 Watt LED A19	20	0.020	74
RACCOON CREEK PARK	FAMILY CABIN 2	11-52	INTERIOR		BEDROOM	1	13 Watt Compact Fluorescent 2-Lamp Fixture	26	0.026	96	1	Re-Lamp with (2) 10 Watt LED A19	20	0.020	74
RACCOON CREEK PARK	FAMILY CABIN 2	11-52	INTERIOR		RESTROOM	1	13 Watt Compact Fluorescent 3-Lamp Fixture	39	0.039	144	1	Re-Lamp with (3) 10 Watt LED A19	30	0.030	111
RACCOON CREEK PARK	FAMILY CABIN 2	11-52	INTERIOR		SHOWER	1	13 Watt Compact Fluorescent Downlight	13	0.013	48	1	Re-Lamp with (1) 10 Watt LED BR30	10	0.010	37
RACCOON CREEK PARK	FAMILY CABIN 2	11-52	INTERIOR		SHOWER	1	13 Watt Compact Fluorescent Fixture	13	0.013	48	1	Re-Lamp with (1) 10 Watt LED A19	10	0.010	37
RACCOON CREEK PARK	FAMILY CABIN 2	11-52	INTERIOR		TABLE LAMPS	4	13 Watt Compact Fluorescent Fixture	13	0.052	193	4	Re-Lamp with (1) 10 Watt LED A19	10	0.040	148
RACCOON CREEK PARK	FAMILY CABIN 2	11-52	INTERIOR		PORCH	2	23 Watt Compact Fluorescent 2-Lamp Fixture	46	0.092	341	2	Re-Lamp with (2) 10 Watt LED A19	20	0.040	148
RACCOON CREEK PARK	FAMILY CABIN 1	11-51	INTERIOR		KITCHEN	1	23 Watt Compact Fluorescent Fixture	23	0.023	85	1	Re-Lamp with (1) 10 Watt LED A19	10	0.010	37
RACCOON CREEK PARK	FAMILY CABIN 1	11-51	INTERIOR		KITCHEN	1	13 Watt Compact Fluorescent 3-Lamp Fixture	39	0.039	144	1	Re-Lamp with (3) 10 Watt LED A19	30	0.030	111

©2013 Energy Systems Group, LLC

EXISTING FIXTURES												PROPOSED FIXTURE UPGRADE				
Park/Building Name	Building	Building #	Phase	Floor	Room Description	Qty	Description	Watts	kW	kWh	Qty	Description	Watts	kW	kWh
RACCOON CREEK PARK	FAMILY CABIN 1	11-51	INTERIOR		SINK	1	1-Lamp F15 Undercabinet; No Retrofit	15	0.015	56	1	No Retrofit	15	0.015	56
RACCOON CREEK PARK	FAMILY CABIN 1	11-51	INTERIOR		HALLWAY	1	13 Watt Compact Fluorescent 2-Lamp Fixture	26	0.026	96	1	Re-Lamp with (2) 10 Watt LED A19	20	0.020	74
RACCOON CREEK PARK	FAMILY CABIN 1	11-51	INTERIOR		BEDROOM	1	13 Watt Compact Fluorescent 2-Lamp Fixture	26	0.026	96	1	Re-Lamp with (2) 10 Watt LED A19	20	0.020	74
RACCOON CREEK PARK	FAMILY CABIN 1	11-51	INTERIOR		BEDROOM	1	13 Watt Compact Fluorescent 2-Lamp Fixture	26	0.026	96	1	Re-Lamp with (2) 10 Watt LED A19	20	0.020	74
RACCOON CREEK PARK	FAMILY CABIN 1	11-51	INTERIOR		RESTROOM	1	13 Watt Compact Fluorescent 3-Lamp Fixture	39	0.039	144	1	Re-Lamp with (3) 10 Watt LED A19	30	0.030	111
RACCOON CREEK PARK	FAMILY CABIN 1	11-51	INTERIOR		SHOWER	1	13 Watt Compact Fluorescent Downlight	13	0.013	48	1	Re-Lamp with (1) 10 Watt LED BR30	10	0.010	37
RACCOON CREEK PARK	FAMILY CABIN 1	11-51	INTERIOR		SHOWER	1	13 Watt Compact Fluorescent Fixture	13	0.013	48	1	Re-Lamp with (1) 10 Watt LED A19	10	0.010	37
RACCOON CREEK PARK	FAMILY CABIN 1	11-51	INTERIOR		TABLE LAMPS	4	13 Watt Compact Fluorescent Fixture	13	0.052	193	4	Re-Lamp with (1) 10 Watt LED A19	10	0.040	148
RACCOON CREEK PARK	FAMILY CABIN 1	11-51	EXTERIOR		EXTERIOR	2	23 Watt Compact Fluorescent 2-Lamp Fixture	46	0.092	403	2	Re-Lamp with (2) 10 Watt LED A19	20	0.040	175
RACCOON CREEK PARK	FAMILY CABIN 8	11-58	INTERIOR		KITCHEN	1	23 Watt Compact Fluorescent Fixture	23	0.023	85	1	Re-Lamp with (1) 10 Watt LED A19	10	0.010	37
RACCOON CREEK PARK	FAMILY CABIN 8	11-58	INTERIOR		KITCHEN	1	13 Watt Compact Fluorescent 3-Lamp Fixture	39	0.039	144	1	Re-Lamp with (3) 10 Watt LED A19	30	0.030	111
RACCOON CREEK PARK	FAMILY CABIN 8	11-58	INTERIOR		SINK	1	1-Lamp F15 Undercabinet; No Retrofit	15	0.015	56	1	No Retrofit	15	0.015	56
RACCOON CREEK PARK	FAMILY CABIN 8	11-58	INTERIOR		HALLWAY	1	13 Watt Compact Fluorescent 2-Lamp Fixture	26	0.026	96	1	Re-Lamp with (2) 10 Watt LED A19	20	0.020	74
RACCOON CREEK PARK	FAMILY CABIN 8	11-58	INTERIOR		BEDROOM	1	13 Watt Compact Fluorescent 2-Lamp Fixture	26	0.026	96	1	Re-Lamp with (2) 10 Watt LED A19	20	0.020	74
RACCOON CREEK PARK	FAMILY CABIN 8	11-58	INTERIOR		BEDROOM	1	13 Watt Compact Fluorescent 2-Lamp Fixture	26	0.026	96	1	Re-Lamp with (2) 10 Watt LED A19	20	0.020	74
RACCOON CREEK PARK	FAMILY CABIN 8	11-58	INTERIOR		RESTROOM	1	13 Watt Compact Fluorescent 3-Lamp Fixture	39	0.039	144	1	Re-Lamp with (3) 10 Watt LED A19	30	0.030	111
RACCOON CREEK PARK	FAMILY CABIN 8	11-58	INTERIOR		SHOWER	1	13 Watt Compact Fluorescent Downlight	13	0.013	48	1	Re-Lamp with (1) 10 Watt LED BR30	10	0.010	37
RACCOON CREEK PARK	FAMILY CABIN 8	11-58	INTERIOR		SHOWER	1	13 Watt Compact Fluorescent Fixture	13	0.013	48	1	Re-Lamp with (1) 10 Watt LED A19	10	0.010	37
RACCOON CREEK PARK	FAMILY CABIN 8	11-58	INTERIOR		TABLE LAMPS	4	13 Watt Compact Fluorescent Fixture	13	0.052	193	4	Re-Lamp with (1) 10 Watt LED A19	10	0.040	148
RACCOON CREEK PARK	FAMILY CABIN 8	11-58	EXTERIOR		EXTERIOR	2	23 Watt Compact Fluorescent 2-Lamp Fixture	46	0.092	403	2	Re-Lamp with (2) 10 Watt LED A19	20	0.040	175
RACCOON CREEK PARK	FAMILY CABIN	11-57	INTERIOR		KITCHEN	1	23 Watt Compact Fluorescent Fixture	23	0.023	85	1	Re-Lamp with (1) 10 Watt LED A19	10	0.010	37
RACCOON CREEK PARK	FAMILY CABIN	11-57	INTERIOR		KITCHEN	1	13 Watt Compact Fluorescent 3-Lamp Fixture	39	0.039	144	1	Re-Lamp with (3) 10 Watt LED A19	30	0.030	111
RACCOON CREEK PARK	FAMILY CABIN	11-57	INTERIOR		SINK	1	1-Lamp F15 Undercabinet; No Retrofit	15	0.015	56	1	No Retrofit	15	0.015	56
RACCOON CREEK PARK	FAMILY CABIN	11-57	INTERIOR		HALLWAY	1	13 Watt Compact Fluorescent 2-Lamp Fixture	26	0.026	96	1	Re-Lamp with (2) 10 Watt LED A19	20	0.020	74
RACCOON CREEK PARK	FAMILY CABIN	11-57	INTERIOR		BEDROOM	1	13 Watt Compact Fluorescent 2-Lamp Fixture	26	0.026	96	1	Re-Lamp with (2) 10 Watt LED A19	20	0.020	74
RACCOON CREEK PARK	FAMILY CABIN	11-57	INTERIOR		BEDROOM	1	13 Watt Compact Fluorescent 2-Lamp Fixture	26	0.026	96	1	Re-Lamp with (2) 10 Watt LED A19	20	0.020	74

©2013 Energy Systems Group, LLC

EXISTING FIXTURES											PROPOSED FIXTURE UPGRADE				
Park/Building Name	Building	Building #	Phase	Floor	Room Description	Qty	Description	Watts	kW	kWh	Qty	Description	Watts	kW	kWh
RACCOON CREEK PARK	FAMILY CABIN	11-57	INTERIOR		RESTROOM	1	13 Watt Compact Fluorescent 3-Lamp Fixture	39	0.039	144	1	Re-Lamp with (3) 10 Watt LED A19	30	0.030	111
RACCOON CREEK PARK	FAMILY CABIN	11-57	INTERIOR		SHOWER	1	13 Watt Compact Fluorescent Downlight	13	0.013	48	1	Re-Lamp with (1) 10 Watt LED BR30	10	0.010	37
RACCOON CREEK PARK	FAMILY CABIN	11-57	INTERIOR		SHOWER	1	13 Watt Compact Fluorescent Fixture	13	0.013	48	1	Re-Lamp with (1) 10 Watt LED A19	10	0.010	37
RACCOON CREEK PARK	FAMILY CABIN	11-57	INTERIOR		TABLE LAMPS	4	13 Watt Compact Fluorescent Fixture	13	0.052	193	4	Re-Lamp with (1) 10 Watt LED A19	10	0.040	148
RACCOON CREEK PARK	FAMILY CABIN	11-57	INTERIOR		BEDROOM	1	13 Watt Compact Fluorescent 2-Lamp Fixture	26	0.026	96	1	Re-Lamp with (2) 10 Watt LED A19	20	0.020	74
RACCOON CREEK PARK	FAMILY CABIN	11-57	EXTERIOR		EXTERIOR	1	23 Watt Compact Fluorescent 2-Lamp Fixture	46	0.046	201	1	Re-Lamp with (2) 10 Watt LED A19	20	0.020	88
RACCOON CREEK PARK	CABINS OGC2 UNIT 2	12-27	INTERIOR		CABIN	1	23 Watt Compact Fluorescent Fixture	23	0.023	85	1	Re-Lamp with (1) 10 Watt LED A19	10	0.010	37
RACCOON CREEK PARK	CABINS OGC2 UNIT 2	12-21	INTERIOR		CABIN	1	23 Watt Compact Fluorescent Fixture	23	0.023	85	1	Re-Lamp with (1) 10 Watt LED A19	10	0.010	37
RACCOON CREEK PARK	CABINS OGC2 UNIT 2	12-22	INTERIOR		CABIN	1	23 Watt Compact Fluorescent Fixture	23	0.023	85	1	Re-Lamp with (1) 10 Watt LED A19	10	0.010	37
RACCOON CREEK PARK	CABINS OGC2 UNIT 2	12-28	INTERIOR		CABIN	1	23 Watt Compact Fluorescent Fixture	23	0.023	85	1	Re-Lamp with (1) 10 Watt LED A19	10	0.010	37
RACCOON CREEK PARK	CABINS OGC2 UNIT 2	12-24	INTERIOR		CABIN	1	23 Watt Compact Fluorescent Fixture	23	0.023	85	1	Re-Lamp with (1) 10 Watt LED A19	10	0.010	37
RACCOON CREEK PARK	CABINS OGC2 UNIT 2	12-23	INTERIOR		CABIN	1	23 Watt Compact Fluorescent Fixture	23	0.023	85	1	Re-Lamp with (1) 10 Watt LED A19	10	0.010	37
RACCOON CREEK PARK	CABINS OGC2 UNIT 2	12-25	INTERIOR		CABIN	1	23 Watt Compact Fluorescent Fixture	23	0.023	85	1	Re-Lamp with (1) 10 Watt LED A19	10	0.010	37
RACCOON CREEK PARK	CABINS OGC2 UNIT 2	12-26	INTERIOR		CABIN	1	23 Watt Compact Fluorescent Fixture	23	0.023	85	1	Re-Lamp with (1) 10 Watt LED A19	10	0.010	37
RACCOON CREEK PARK	CABINS OGC2 UNIT 1	12-14	INTERIOR		CABIN	1	23 Watt Compact Fluorescent Fixture	23	0.023	85	1	Re-Lamp with (1) 10 Watt LED A19	10	0.010	37
RACCOON CREEK PARK	CABINS OGC2 UNIT 1	12-17	INTERIOR		CABIN	1	23 Watt Compact Fluorescent Fixture	23	0.023	85	1	Re-Lamp with (1) 10 Watt LED A19	10	0.010	37
RACCOON CREEK PARK	CABINS OGC2 UNIT 1	12-15	INTERIOR		CABIN	1	23 Watt Compact Fluorescent Fixture	23	0.023	85	1	Re-Lamp with (1) 10 Watt LED A19	10	0.010	37
RACCOON CREEK PARK	CABINS OGC2 UNIT 1	12-13	INTERIOR		CABIN	1	23 Watt Compact Fluorescent Fixture	23	0.023	85	1	Re-Lamp with (1) 10 Watt LED A19	10	0.010	37
RACCOON CREEK PARK	CABINS OGC2 UNIT 1	12-18	INTERIOR		CABIN	1	23 Watt Compact Fluorescent Fixture	23	0.023	85	1	Re-Lamp with (1) 10 Watt LED A19	10	0.010	37
RACCOON CREEK PARK	CABINS OGC2 UNIT 1	12-16	INTERIOR		CABIN	1	23 Watt Compact Fluorescent Fixture	23	0.023	85	1	Re-Lamp with (1) 10 Watt LED A19	10	0.010	37
RACCOON CREEK PARK	CABINS OGC2 UNIT 1	12-12	INTERIOR		CABIN	1	23 Watt Compact Fluorescent Fixture	23	0.023	85	1	Re-Lamp with (1) 10 Watt LED A19	10	0.010	37
RACCOON CREEK PARK	CABINS OGC2 UNIT 3	12-33	INTERIOR		CABIN	1	23 Watt Compact Fluorescent Fixture	23	0.023	85	1	Re-Lamp with (1) 10 Watt LED A19	10	0.010	37
RACCOON CREEK PARK	CABINS OGC2 UNIT 3	12-38	INTERIOR		CABIN	1	23 Watt Compact Fluorescent Fixture	23	0.023	85	1	Re-Lamp with (1) 10 Watt LED A19	10	0.010	37
RACCOON CREEK PARK	CABINS OGC2 UNIT 3	12-32	INTERIOR		CABIN	1	23 Watt Compact Fluorescent Fixture	23	0.023	85	1	Re-Lamp with (1) 10 Watt LED A19	10	0.010	37
RACCOON CREEK PARK	CABINS OGC2 UNIT 3	12-36	INTERIOR		CABIN	1	23 Watt Compact Fluorescent Fixture	23	0.023	85	1	Re-Lamp with (1) 10 Watt LED A19	10	0.010	37
RACCOON CREEK PARK	CABINS OGC2 UNIT 3	12-37	INTERIOR		CABIN	1	23 Watt Compact Fluorescent Fixture	23	0.023	85	1	Re-Lamp with (1) 10 Watt LED A19	10	0.010	37

©2013 Energy Systems Group, LLC

EXISTING FIXTURES												PROPOSED FIXTURE UPGRADE				
Park/Building Name	Building	Building #	Phase	Floor	Room Description	Qty	Description	Watts	kW	kWh	Qty	Description	Watts	kW	kWh
RACCOON CREEK PARK	CABINS OGC2 UNIT 3	12-34	INTERIOR		CABIN	1	23 Watt Compact Fluorescent Fixture	23	0.023	85	1	Re-Lamp with (1) 10 Watt LED A19	10	0.010	37
RACCOON CREEK PARK	CABINS OGC2 UNIT 3	12-35	INTERIOR		CABIN	1	23 Watt Compact Fluorescent Fixture	23	0.023	85	1	Re-Lamp with (1) 10 Watt LED A19	10	0.010	37
RACCOON CREEK PARK	CABINS OGC2 UNIT 3	12-31	INTERIOR		CABIN	1	23 Watt Compact Fluorescent Fixture	23	0.023	85	1	Re-Lamp with (1) 10 Watt LED A19	10	0.010	37
RACCOON CREEK PARK	CABINS OGC2 UNIT 4	12-45	INTERIOR		CABIN	1	23 Watt Compact Fluorescent Fixture	23	0.023	85	1	Re-Lamp with (1) 10 Watt LED A19	10	0.010	37
RACCOON CREEK PARK	CABINS OGC2 UNIT 4	12-48	INTERIOR		CABIN	1	23 Watt Compact Fluorescent Fixture	23	0.023	85	1	Re-Lamp with (1) 10 Watt LED A19	10	0.010	37
RACCOON CREEK PARK	CABINS OGC2 UNIT 4	12-46	INTERIOR		CABIN	1	23 Watt Compact Fluorescent Fixture	23	0.023	85	1	Re-Lamp with (1) 10 Watt LED A19	10	0.010	37
RACCOON CREEK PARK	CABINS OGC2 UNIT 4	12-44	INTERIOR		CABIN	1	23 Watt Compact Fluorescent Fixture	23	0.023	85	1	Re-Lamp with (1) 10 Watt LED A19	10	0.010	37
RACCOON CREEK PARK	CABINS OGC2 UNIT 4	12-47	INTERIOR		CABIN	1	23 Watt Compact Fluorescent Fixture	23	0.023	85	1	Re-Lamp with (1) 10 Watt LED A19	10	0.010	37
RACCOON CREEK PARK	CABINS OGC2 UNIT 4	12-41	INTERIOR		CABIN	1	23 Watt Compact Fluorescent Fixture	23	0.023	85	1	Re-Lamp with (1) 10 Watt LED A19	10	0.010	37
RACCOON CREEK PARK	CABINS OGC2 UNIT 4	12-42	INTERIOR		CABIN	1	23 Watt Compact Fluorescent Fixture	23	0.023	85	1	Re-Lamp with (1) 10 Watt LED A19	10	0.010	37
RACCOON CREEK PARK	CABINS OGC2 UNIT 4	12-43	INTERIOR		CABIN	1	23 Watt Compact Fluorescent Fixture	23	0.023	85	1	Re-Lamp with (1) 10 Watt LED A19	10	0.010	37
RACCOON CREEK PARK	OGC3 MESS HALL	13-3	INTERIOR		REFRIGERATION ROOM	2	23 Watt Compact Fluorescent Fixture	23	0.046	103	2	Re-Lamp with (1) 10 Watt LED A19	10	0.020	45
RACCOON CREEK PARK	OGC3 MESS HALL	13-3	INTERIOR		KITCHEN	6	23 Watt Compact Fluorescent Fixture	23	0.138	310	6	Re-Lamp with (1) 10 Watt LED A19	10	0.060	135
RACCOON CREEK PARK	OGC3 MESS HALL	13-3	INTERIOR		HOOD	4	23 Watt Compact Fluorescent Jelly Jar	23	0.092	207	4	Re-Lamp with (1) 10 Watt LED A19	10	0.040	90
RACCOON CREEK PARK	OGC3 MESS HALL	13-3	INTERIOR		HOOD	10	23 Watt Compact Fluorescent Fixture	23	0.230	517	10	Re-Lamp with (1) 10 Watt LED A19	10	0.100	225
RACCOON CREEK PARK	OGC3 MESS HALL	13-3	EXTERIOR		EXTERIOR	1	23 Watt Compact Fluorescent 2-Lamp PAR38	46	0.046	201	1	Re-Lamp with (2) 17 Watt LED PAR38	34	0.034	149
RACCOON CREEK PARK	OGC3 MESS HALL	13-3	EXTERIOR		EXTERIOR	1	23 Watt Compact Fluorescent Fixture	23	0.023	101	1	Re-Lamp with (1) 10 Watt LED A19	10	0.010	44
RACCOON CREEK PARK	OGC3 MESS HALL	13-3	EXTERIOR		EXTERIOR	1	23 Watt Compact Fluorescent Fixture	23	0.023	101	1	Re-Lamp with (1) 10 Watt LED A19	10	0.010	44
RACCOON CREEK PARK	OGC3 CABINS	13-21	INTERIOR		CABIN	1	23 Watt Compact Fluorescent Fixture	23	0.023	85	1	Re-Lamp with (1) 10 Watt LED A19	10	0.010	37
RACCOON CREEK PARK	OGC3 CABINS	13-25	INTERIOR		CABIN	1	23 Watt Compact Fluorescent Fixture	23	0.023	85	1	Re-Lamp with (1) 10 Watt LED A19	10	0.010	37
RACCOON CREEK PARK	OGC3 CABINS	13-13	INTERIOR		CABIN	1	23 Watt Compact Fluorescent Fixture	23	0.023	85	1	Re-Lamp with (1) 10 Watt LED A19	10	0.010	37
RACCOON CREEK PARK	OGC3 CABINS	13-28	INTERIOR		CABIN	1	23 Watt Compact Fluorescent Fixture	23	0.023	85	1	Re-Lamp with (1) 10 Watt LED A19	10	0.010	37
RACCOON CREEK PARK	OGC3 CABINS	13-23	INTERIOR		CABIN	1	23 Watt Compact Fluorescent Fixture	23	0.023	85	1	Re-Lamp with (1) 10 Watt LED A19	10	0.010	37
RACCOON CREEK PARK	OGC3 CABINS	13-15	INTERIOR		CABIN	1	23 Watt Compact Fluorescent Fixture	23	0.023	85	1	Re-Lamp with (1) 10 Watt LED A19	10	0.010	37
RACCOON CREEK PARK	OGC3 CABINS	13-11	INTERIOR		CABIN	1	23 Watt Compact Fluorescent Fixture	23	0.023	85	1	Re-Lamp with (1) 10 Watt LED A19	10	0.010	37
RACCOON CREEK PARK	OGC3 CABINS	13-18	INTERIOR		CABIN	1	23 Watt Compact Fluorescent Fixture	23	0.023	85	1	Re-Lamp with (1) 10 Watt LED A19	10	0.010	37

©2013 Energy Systems Group, LLC

EXISTING FIXTURES												PROPOSED FIXTURE UPGRADE				
Park/Building Name	Building	Building #	Phase	Floor	Room Description	Qty	Description	Watts	kW	kWh	Qty	Description	Watts	kW	kWh
RACCOON CREEK PARK	OGC3 CABINS	13-22	INTERIOR		CABIN	1	23 Watt Compact Fluorescent Fixture	23	0.023	85	1	Re-Lamp with (1) 10 Watt LED A19	10	0.010	37
RACCOON CREEK PARK	OGC3 CABINS	13-12	INTERIOR		CABIN	1	23 Watt Compact Fluorescent Fixture	23	0.023	85	1	Re-Lamp with (1) 10 Watt LED A19	10	0.010	37
RACCOON CREEK PARK	OGC3 CABINS	13-27	INTERIOR		CABIN	1	23 Watt Compact Fluorescent Fixture	23	0.023	85	1	Re-Lamp with (1) 10 Watt LED A19	10	0.010	37
RACCOON CREEK PARK	OGC3 CABINS	13-02	INTERIOR		CABIN	1	23 Watt Compact Fluorescent Fixture	23	0.023	85	1	Re-Lamp with (1) 10 Watt LED A19	10	0.010	37
RACCOON CREEK PARK	OGC3 CABINS	13-26	INTERIOR		CABIN	1	23 Watt Compact Fluorescent Fixture	23	0.023	85	1	Re-Lamp with (1) 10 Watt LED A19	10	0.010	37
RACCOON CREEK PARK	OGC3 CABINS	13-14	INTERIOR		CABIN	1	23 Watt Compact Fluorescent Fixture	23	0.023	85	1	Re-Lamp with (1) 10 Watt LED A19	10	0.010	37
RACCOON CREEK PARK	OGC3 CABINS	13-24	INTERIOR		CABIN	1	23 Watt Compact Fluorescent Fixture	23	0.023	85	1	Re-Lamp with (1) 10 Watt LED A19	10	0.010	37
RACCOON CREEK PARK	OGC3 CABINS	13-20	INTERIOR		CABIN	1	23 Watt Compact Fluorescent Fixture	23	0.023	85	1	Re-Lamp with (1) 10 Watt LED A19	10	0.010	37
RACCOON CREEK PARK	OGC3 CABINS	13-16	INTERIOR		CABIN	1	23 Watt Compact Fluorescent Fixture	23	0.023	85	1	Re-Lamp with (1) 10 Watt LED A19	10	0.010	37
RACCOON CREEK PARK	OGC3 CABINS	13-17	INTERIOR		CABIN	1	23 Watt Compact Fluorescent Fixture	23	0.023	85	1	Re-Lamp with (1) 10 Watt LED A19	10	0.010	37
RACCOON CREEK PARK	OGC 3 SHOWER HOUSE	13-29	INTERIOR		SHOWER HOUSE	4	23 Watt Compact Fluorescent Fixture	23	0.092	421	4	Re-Lamp with (1) 10 Watt LED A19	10	0.040	183
RACCOON CREEK PARK	STORAGE	2-2	INTERIOR		STORAGE	7	T12 1x8 4-Lamp Industrial Fixture; Turret	144	1.008	3,734	7	New 1x8 2-Lamp Industrial Fixture with (4) 12.5 Watt LED T8 4' Lamps; Direct Wire to Socket	50	0.350	1,296
RACCOON CREEK PARK	STORAGE	2-2	INTERIOR		STORAGE	1	T12 1x4 2-Lamp Industrial Strip Fixture	72	0.072	267	1	Retrofit with (2) 12.5 Watt LED T8 4' Lamps; Direct Wire to Socket	25	0.025	93
RACCOON CREEK PARK	STORAGE	2-2	INTERIOR		STORAGE	1	23 Watt Compact Fluorescent Fixture	23	0.023	85	1	Re-Lamp with (1) 10 Watt LED A19	10	0.010	37
RACCOON CREEK PARK	CARPENTER SHOP	2-5	INTERIOR		SHOP	6	T12 1x4 4-Lamp Egg Crate Fixture	144	0.864	2,247	6	New 1x4 4-Lamp Wrap Fixture with (4) 12.5 Watt LED T8 4' Lamp; Direct Wire to Socket	50	0.300	780
RACCOON CREEK PARK	CARPENTER SHOP	2-5	INTERIOR		SHOP	1	T8 1x4 2-Lamp Industrial Strip Fixture	62	0.062	161	1	Retrofit with (2) 12.5 Watt LED T8 4' Lamps; Direct Wire to Socket	25	0.025	65
RACCOON CREEK PARK	CARPENTER SHOP	2-5	INTERIOR		SHOP	1	23 Watt Compact Fluorescent Fixture	23	0.023	60	1	Re-Lamp with (1) 10 Watt LED A19	10	0.010	26
RACCOON CREEK PARK	CARPENTER SHOP	2-5	INTERIOR		RESTROOM	1	23 Watt Compact Fluorescent Fixture	23	0.023	60	1	Re-Lamp with (1) 10 Watt LED A19	10	0.010	26
RACCOON CREEK PARK	CARPENTER SHOP	2-5	EXTERIOR		EXTERIOR	1	Existing LED Fixture; No Retrofit	10	0.010	44	1	No Retrofit	10	0.010	44
RACCOON CREEK PARK	CARPENTER SHOP	2-5	EXTERIOR		EXTERIOR	1	Existing LED Fixture; No Retrofit	20	0.020	88	1	No Retrofit	20	0.020	88
RACCOON CREEK PARK	CARPENTER SHOP	2-5	EXTERIOR		EXTERIOR	1	175 Watt Mercury Vapor Dusk to Dawn Fixture	210	0.210	920	1	New 26 Watt LED Dusk to Dawn Barnyard Fixture	26	0.026	114
RACCOON CREEK PARK	REC HALL	11-7	INTERIOR		HALLWAY	5	23 Watt Compact Fluorescent Fixture	23	0.115	259	5	Re-Lamp with (1) 10 Watt LED A19	10	0.050	112
RACCOON CREEK PARK	REC HALL	11-7	INTERIOR		HALLWAY	2	Existing LED Fixture; No Retrofit	30	0.060	135	2	No Retrofit	30	0.060	135
RACCOON CREEK PARK	REC HALL	11-7	INTERIOR		MECHANICAL	1	23 Watt Compact Fluorescent Fixture	23	0.023	23	1	Re-Lamp with (1) 10 Watt LED A19	10	0.010	10
RACCOON CREEK PARK	REC HALL	11-7	INTERIOR		LAUNDRY	1	23 Watt Compact Fluorescent Fixture	23	0.023	52	1	Re-Lamp with (1) 10 Watt LED A19	10	0.010	22
RACCOON CREEK PARK	REC HALL	11-7	INTERIOR		ELECTRICAL ROOM	1	13 Watt Compact Fluorescent Fixture	13	0.013	13	1	Re-Lamp with (1) 10 Watt LED A19	10	0.010	10

©2013 Energy Systems Group, LLC

EXISTING FIXTURES											PROPOSED FIXTURE UPGRADE				
Park/Building Name	Building	Building #	Phase	Floor	Room Description	Qty	Description	Watts	kW	kWh	Qty	Description	Watts	kW	kWh
RACCOON CREEK PARK	REC HALL	11-7	INTERIOR		MENS RESTROOM	1	13 Watt Compact Fluorescent Fixture	13	0.013	29	1	Re-Lamp with (1) 10 Watt LED A19	10	0.010	22
RACCOON CREEK PARK	REC HALL	11-7	INTERIOR		WOMENS RESTROOM	1	13 Watt Compact Fluorescent Fixture	13	0.013	29	1	Re-Lamp with (1) 10 Watt LED A19	10	0.010	22
RACCOON CREEK PARK	REC HALL	11-7	INTERIOR		KITCHEN	1	T12 1x4 2-Lamp Wrap Fixture	72	0.072	162	1	Retrofit with (2) 12.5 Watt LED T8 4' Lamps; Direct Wire to Socket	25	0.025	56
RACCOON CREEK PARK	REC HALL	11-7	INTERIOR		KITCHEN	1	T12 1x4 2-Lamp Vaportight Fixture	72	0.072	162	1	Retrofit with (2) 12.5 Watt LED T8 4' Lamps; Direct Wire to Socket	25	0.025	56
RACCOON CREEK PARK	REC HALL	11-7	INTERIOR		KITCHEN	1	13 Watt Compact Fluorescent 3-Lamp Fixture	39	0.039	88	1	Re-Lamp with (3) 10 Watt LED A19	30	0.030	67
RACCOON CREEK PARK	REC HALL	11-7	EXTERIOR		EXTERIOR	2	Existing LED Fixture; No Retrofit	20	0.040	175	2	No Retrofit	20	0.040	175
RACCOON CREEK PARK	2ND WELD SHOP BLOCK HOUSE	2-1	INTERIOR		STORAGE	1	13 Watt Compact Fluorescent 2-Lamp Fixture	26	0.026	26	1	Re-Lamp with (2) 10 Watt LED A19	20	0.020	20
RACCOON CREEK PARK	2ND WELD SHOP BLOCK HOUSE	2-1	INTERIOR		STORAGE	1	23 Watt Compact Fluorescent Fixture	23	0.023	23	1	Re-Lamp with (1) 10 Watt LED A19	10	0.010	10
RACCOON CREEK PARK	2ND WELD SHOP BLOCK HOUSE	2-1	INTERIOR		STORAGE	1	23 Watt Compact Fluorescent Fixture	23	0.023	23	1	Re-Lamp with (1) 10 Watt LED A19	10	0.010	10
RACCOON CREEK PARK	2ND WELD SHOP BLOCK HOUSE	2-1	EXTERIOR		EXTERIOR	1	13 Watt Compact Fluorescent Fixture	13	0.013	57	1	Re-Lamp with (1) 10 Watt LED A19	10	0.010	44
RACCOON CREEK PARK	OGC 1 UNIT 1 LODGE	11-10	INTERIOR		LODGE	2	23 Watt Compact Fluorescent Fixture	23	0.046	170	2	Re-Lamp with (1) 10 Watt LED A19	10	0.020	74
RACCOON CREEK PARK	OGC 1 UNIT 1 LODGE	11-10	INTERIOR		LODGE	1	23 Watt Compact Fluorescent Fixture	23	0.023	85	1	Re-Lamp with (1) 10 Watt LED A19	10	0.010	37
RACCOON CREEK PARK	LAKESIDE LODGE	10-1	INTERIOR		MUD ROOM	1	13 Watt Compact Fluorescent 2-Lamp Fixture	26	0.026	96	1	Re-Lamp with (2) 10 Watt LED A19	20	0.020	74
RACCOON CREEK PARK	LAKESIDE LODGE	10-1	INTERIOR		KITCHEN	3	13 Watt Compact Fluorescent 2-Lamp Fixture	26	0.078	289	3	Re-Lamp with (2) 10 Watt LED A19	20	0.060	222
RACCOON CREEK PARK	LAKESIDE LODGE	10-1	INTERIOR		LAUNDRY	1	13 Watt Compact Fluorescent 2-Lamp Fixture	26	0.026	96	1	Re-Lamp with (2) 10 Watt LED A19	20	0.020	74
RACCOON CREEK PARK	LAKESIDE LODGE	10-1	INTERIOR		LIVING ROOM	2	13 Watt Compact Fluorescent 3-Lamp Fixture	39	0.078	289	2	Re-Lamp with (3) 10 Watt LED A19	30	0.060	222
RACCOON CREEK PARK	LAKESIDE LODGE	10-1	INTERIOR		HALLWAY	1	13 Watt Compact Fluorescent 2-Lamp Fixture	26	0.026	96	1	Re-Lamp with (2) 10 Watt LED A19	20	0.020	74
RACCOON CREEK PARK	LAKESIDE LODGE	10-1	INTERIOR		BEDROOM	1	13 Watt Compact Fluorescent 2-Lamp Fixture	26	0.026	96	1	Re-Lamp with (2) 10 Watt LED A19	20	0.020	74
RACCOON CREEK PARK	LAKESIDE LODGE	10-1	INTERIOR		BEDROOM	1	13 Watt Compact Fluorescent 2-Lamp Fixture	26	0.026	96	1	Re-Lamp with (2) 10 Watt LED A19	20	0.020	74
RACCOON CREEK PARK	LAKESIDE LODGE	10-1	INTERIOR		BEDROOM	1	13 Watt Compact Fluorescent 2-Lamp Fixture	26	0.026	96	1	Re-Lamp with (2) 10 Watt LED A19	20	0.020	74
RACCOON CREEK PARK	LAKESIDE LODGE	10-1	INTERIOR		BEDROOM	1	13 Watt Compact Fluorescent 2-Lamp Fixture	26	0.026	96	1	Re-Lamp with (2) 10 Watt LED A19	20	0.020	74
RACCOON CREEK PARK	LAKESIDE LODGE	10-1	INTERIOR		STAIRS	1	13 Watt Compact Fluorescent Fixture	13	0.013	48	1	Re-Lamp with (1) 10 Watt LED A19	10	0.010	37
RACCOON CREEK PARK	LAKESIDE LODGE	10-1	INTERIOR		RESTROOM	1	18 Watt Compact Fluorescent 4-Lamp Fixture	72	0.072	267	1	Re-Lamp with (4) 10 Watt LED A19	40	0.040	148
RACCOON CREEK PARK	LAKESIDE LODGE	10-1	INTERIOR		BASEMENT	6	23 Watt Compact Fluorescent Fixture	23	0.138	511	6	Re-Lamp with (1) 10 Watt LED A19	10	0.060	222
RACCOON CREEK PARK	LAKESIDE LODGE	10-1	EXTERIOR		EXTERIOR	1	13 Watt Compact Fluorescent Fixture	13	0.013	57	1	Re-Lamp with (1) 10 Watt LED A19	10	0.010	44
RACCOON CREEK PARK	LAKESIDE LODGE	10-1	EXTERIOR		EXTERIOR	1	18 Watt Compact Fluorescent 2-Lamp PAR30 Fixture	36	0.036	158	1	Re-Lamp with (2) 10 Watt LED PAR30	20	0.020	88

©2013 Energy Systems Group, LLC

EXISTING FIXTURES												PROPOSED FIXTURE UPGRADE				
Park/Building Name	Building	Building #	Phase	Floor	Room Description	Qty	Description	Watts	kW	kWh	Qty	Description	Watts	kW	kWh
RACCOON CREEK PARK	LAKESIDE LODGE	10-1	EXTERIOR		EXTERIOR	2	13 Watt Compact Fluorescent Fixture	13	0.026	114	2	Re-Lamp with (1) 10 Watt LED A19	10	0.020	88
RACCOON CREEK PARK	LAKESIDE LODGE	10-1	EXTERIOR		EXTERIOR	1	23 Watt Compact Fluorescent Downlight	23	0.023	101	1	Retrofit with 9 Watt LED 6" Downlight	9	0.009	39
RACCOON CREEK PARK	WATER TREATMENT	6-3	INTERIOR		MECHANICAL	6	T8 1x4 2-Lamp Vaportight Fixture	62	0.372	372	6	Retrofit with (2) 12.5 Watt LED T8 4' Lamps; Direct Wire to Socket	25	0.150	150
RACCOON CREEK PARK	WATER TREATMENT	6-3	INTERIOR		STORAGE	2	T8 1x4 2-Lamp Vaportight Fixture	62	0.124	124	2	Retrofit with (2) 12.5 Watt LED T8 4' Lamps; Direct Wire to Socket	25	0.050	50
RACCOON CREEK PARK	WATER TREATMENT	6-3	EXTERIOR		EXTERIOR	2	Existing LED Fixture; No Retrofit	40	0.080	350	2	No Retrofit	40	0.080	350
RACCOON CREEK PARK	SEWAGE TREATMENT PLANT	6-2	INTERIOR		OFFICE	3	T12 1x4 4-Lamp Wrap Fixture	144	0.432	1,124	3	Retrofit with (4) 12.5 Watt LED T8 4' Lamps; Direct Wire to Socket	50	0.150	390
RACCOON CREEK PARK	SEWAGE TREATMENT PLANT	6-2	INTERIOR		OFFICE	1	T12 1x4 4-Lamp Wrap Fixture; Damaged	144	0.144	375	1	New 1x8 2-Lamp Wrap Fixture with (4) 12.5 Watt LED T8 4' Lamps; Direct Wire to Socket	50	0.050	130
RACCOON CREEK PARK	SEWAGE TREATMENT PLANT	6-2	INTERIOR		RESTROOM	1	T12 1x4 4-Lamp Wrap Fixture	144	0.144	375	1	Retrofit with (4) 12.5 Watt LED T8 4' Lamps; Direct Wire to Socket	50	0.050	130
RACCOON CREEK PARK	SEWAGE TREATMENT PLANT	6-2	INTERIOR		RESTROOM	3	23 Watt Compact Fluorescent Fixture	23	0.069	179	3	Re-Lamp with (1) 10 Watt LED A19	10	0.030	78
RACCOON CREEK PARK	SEWAGE TREATMENT PLANT	6-2	INTERIOR		MECHANICAL	6	23 Watt Compact Fluorescent Fixture	23	0.138	138	6	Re-Lamp with (1) 10 Watt LED A19	10	0.060	60
RACCOON CREEK PARK	SEWAGE TREATMENT PLANT	6-2	INTERIOR		CHEMICAL ROOM	1	23 Watt Compact Fluorescent Fixture	23	0.023	23	1	Re-Lamp with (1) 10 Watt LED A19	10	0.010	10
RACCOON CREEK PARK	SEWAGE TREATMENT PLANT	6-2	EXTERIOR		EXTERIOR	2	150 Watt Metal Halide 2-Head Flood Fixture	376	0.752	3,294	2	(2) New 52 Watt LED Flood Fixtures	104	0.208	911
RACCOON CREEK PARK	SEWAGE TREATMENT PLANT	6-2	EXTERIOR		EXTERIOR	3	Existing LED Fixture; No Retrofit	40	0.120	526	3	No Retrofit	40	0.120	526
RACCOON CREEK PARK	SEWAGE TREATMENT PLANT	6-2	EXTERIOR		EXTERIOR	1	70 Watt High Pressure Sodium Wall Pack Fixture	90	0.090	394	1	New 24 Watt LED Wall Pack Fixture; Non-Dark Sky	25	0.025	110
RACCOON CREEK PARK	FOOD CONCESSION	8-1	INTERIOR		FOOD PREP	3	T12 1x4 4-Lamp Wrap Fixture	144	0.432	1,192	3	Retrofit with (4) 12.5 Watt LED T8 4' Lamps; Direct Wire to Socket	50	0.150	414
RACCOON CREEK PARK	FOOD CONCESSION	8-1	INTERIOR		RESTROOM	1	T12 1x1 1-Lamp Vanity Fixture	43	0.043	119	1	Retrofit with (1) 12.5 Watt LED T8 4' Lamps; Direct Wire to Socket	12.5	0.013	35
RACCOON CREEK PARK	FOOD CONCESSION	8-1	INTERIOR		MECHANICAL	1	23 Watt Compact Fluorescent Drum Fixture ; Damaged	23	0.023	23	1	Re-Lamp with (1) 10 Watt LED A19	10	0.010	10
RACCOON CREEK PARK	FOOD CONCESSION	8-1	INTERIOR		SERVING	6	T12 1x4 2-Lamp Wrap Fixture	72	0.432	1,192	6	Retrofit with (2) 12.5 Watt LED T8 4' Lamps; Direct Wire to Socket	25	0.150	414
RACCOON CREEK PARK	FOOD CONCESSION	8-1	EXTERIOR		EXTERIOR	4	23 Watt Compact Fluorescent Canopy Fixture	23	0.092	199	4	New 10 Watt LED Canopy Fixture	12	0.048	104
RACCOON CREEK PARK	FOOD CONCESSION	8-1	EXTERIOR		EXTERIOR	2	23 Watt Compact Fluorescent Wall Pack Fixture	23	0.046	99	2	New 24 Watt LED Wall Pack Fixture; Non-Dark Sky	25	0.050	108
RACCOON CREEK PARK	FOOD CONCESSION	8-1	INTERIOR		STORE	6	T12 1x4 2-Lamp Wrap Fixture	72	0.432	1,192	6	Retrofit with (2) 12.5 Watt LED T8 4' Lamps; Direct Wire to Socket	25	0.150	414
RACCOON CREEK PARK	FOOD CONCESSION	8-1	INTERIOR		RESTROOM	1	T12 1x4 2-Lamp Wrap Fixture	72	0.072	199	1	Retrofit with (2) 12.5 Watt LED T8 4' Lamps; Direct Wire to Socket	25	0.025	69
RACCOON CREEK PARK	FOOD CONCESSION	8-1	EXTERIOR		EXTERIOR	4	23 Watt Compact Fluorescent Canopy Fixture	23	0.092	199	4	New 10 Watt LED Canopy Fixture	12	0.048	104
RACCOON CREEK PARK	BOAT RENTAL COMFORT	5-9	INTERIOR		MENS RESTROOM	2	T 12 1x4 2-Lamp Vaportight Fixture; Damaged	72	0.144	397	2	New 1x4 2-Lamp Vaportight Fixture with (2) 12.5 Watt LED T8 4' Lamp; Direct Wire to Socket	25	0.050	138
RACCOON CREEK PARK	BOAT RENTAL COMFORT	5-9	INTERIOR		MENS RESTROOM	1	23 Watt Compact Fluorescent Canopy Fixture	23	0.023	63	1	Re-Lamp with (1) 10 Watt LED A19	10	0.010	28
RACCOON CREEK PARK	BOAT RENTAL COMFORT	5-9	INTERIOR		WOMENS RESTROOM	1	23 Watt Compact Fluorescent Canopy Fixture	23	0.023	63	1	Re-Lamp with (1) 10 Watt LED A19	10	0.010	28

©2013 Energy Systems Group, LLC

EXISTING FIXTURES												PROPOSED FIXTURE UPGRADE				
Park/Building Name	Building	Building #	Phase	Floor	Room Description	Qty	Description	Watts	kW	kWh	Qty	Description	Watts	kW	kWh
RACCOON CREEK PARK	BOAT RENTAL COMFORT	5-9	INTERIOR		WOMENS RESTROOM	2	T12 1x4 2-Lamp Vaportight Fixture; Damaged	72	0.144	397	2	New 1x4 2-Lamp Vaportight Fixture with (2) 12.5 Watt LED T8 4' Lamp; Direct Wire to Socket	25	0.050	138
RACCOON CREEK PARK	COMFORT STATION LAKE SIDE	5-11	INTERIOR		MENS RESTROOM	2	T12 1x4 2-Lamp Vaportight Fixture; Damaged	72	0.144	397	2	New 1x4 2-Lamp Vaportight Fixture with (2) 12.5 Watt LED T8 4' Lamp; Direct Wire to Socket	25	0.050	138
RACCOON CREEK PARK	COMFORT STATION LAKE SIDE	5-11	INTERIOR		WOMENS RESTROOM	2	T12 1x4 2-Lamp Vaportight Fixture; Damaged	72	0.144	397	2	New 1x4 2-Lamp Vaportight Fixture with (2) 12.5 Watt LED T8 4' Lamp; Direct Wire to Socket	25	0.050	138
RACCOON CREEK PARK	COMFORT STATION LAKE SIDE	5-11	EXTERIOR		EXTERIOR	2	23 Watt Compact Fluorescent Canopy Fixture	23	0.046	66	2	New 10 Watt LED Canopy Fixture	12	0.024	35
RACCOON CREEK PARK	WHITE BARN	17-3	INTERIOR		BARN	2	300 Watt Incandescent A-Lamp Fixture	300	0.600	1,561	2	Re-Lamp with (1) 27 Watt LED Omni-Cob Lamp; Hardwire Ballast	27	0.054	140
RACCOON CREEK PARK	WHITE BARN	17-3	INTERIOR		BARN	2	200 Watt Incandescent A-Lamp Fixture	200	0.400	1,040	2	Re-Lamp with (1) 18 Watt LED A21	18	0.036	94
RACCOON CREEK PARK	WHITE BARN	17-3	INTERIOR		BARN	3	23 Watt Compact Fluorescent Fixture	23	0.069	179	3	Re-Lamp with (1) 10 Watt LED A19	10	0.030	78
RACCOON CREEK PARK	WHITE BARN	17-3	INTERIOR		2ND LEVEL	3	150 Watt Incandescent A-Lamp Fixture	150	0.450	1,170	3	Re-Lamp with (1) 18 Watt LED A21	18	0.054	140
RACCOON CREEK PARK	WHITE BARN	17-3	EXTERIOR		EXTERIOR	2	23 Watt Compact Fluorescent 2-Lamp PAR38	46	0.092	403	2	Re-Lamp with (2) 17 Watt LED PAR38	34	0.068	298
RACCOON CREEK PARK	APARTMENT RANCH	17-2	INTERIOR		GARAGE	1	T12 1x4 2-Lamp Industrial Strip Fixture	72	0.072	72	1	Retrofit with (2) 12.5 Watt LED T8 4' Lamps; Direct Wire to Socket	25	0.025	25
RACCOON CREEK PARK	APARTMENT RANCH	17-2	INTERIOR		GARAGE	1	100 Watt Incandescent A-Lamp Fixture	100	0.100	100	1	Re-Lamp with (1) 18 Watt LED A21	18	0.018	18
RACCOON CREEK PARK	APARTMENT RANCH	17-2	INTERIOR		GARAGE	1	200 Watt Incandescent A-Lamp Fixture	200	0.200	200	1	Re-Lamp with (1) 18 Watt LED A21	18	0.018	18
RACCOON CREEK PARK	APARTMENT RANCH	17-2	INTERIOR		GARAGE	1	13 Watt Compact Fluorescent Fixture	13	0.013	13	1	Re-Lamp with (1) 10 Watt LED A19	10	0.010	10
RACCOON CREEK PARK	APARTMENT RANCH	17-2	INTERIOR		GARAGE	1	23 Watt Compact Fluorescent Fixture	23	0.023	23	1	Re-Lamp with (1) 10 Watt LED A19	10	0.010	10
RACCOON CREEK PARK	APARTMENT RANCH	17-2	INTERIOR		APARTMENT KITCHEN	1	100 Watt Incandescent 3-Lamp Fixture	300	0.300	1,111	1	Re-Lamp with (3) 18 Watt LED A21	54	0.054	200
RACCOON CREEK PARK	APARTMENT RANCH	17-2	INTERIOR		APARTMENT KITCHEN	1	100 Watt Incandescent 2-Lamp A-Lamp	200	0.200	741	1	Re-Lamp with (2) 18 Watt LED A21	36	0.036	133
RACCOON CREEK PARK	APARTMENT RANCH	17-2	INTERIOR		LIVING ROOM	3	13 Watt Compact Fluorescent Fixture	13	0.039	144	3	Re-Lamp with (1) 10 Watt LED A19	10	0.030	111
RACCOON CREEK PARK	APARTMENT RANCH	17-2	INTERIOR		HALLWAY	1	13 Watt Compact Fluorescent Fixture	13	0.013	48	1	Re-Lamp with (1) 10 Watt LED A19	10	0.010	37
RACCOON CREEK PARK	APARTMENT RANCH	17-2	INTERIOR		RESTROOM	1	13 Watt Compact Fluorescent 2-Lamp Fixture	26	0.026	96	1	Re-Lamp with (2) 10 Watt LED A19	20	0.020	74
RACCOON CREEK PARK	APARTMENT RANCH	17-2	INTERIOR		RESTROOM	2	60 Watt Incandescent 2-Lamp Fixture	120	0.240	889	2	Re-Lamp with (2) 10 Watt LED A19	20	0.040	148
RACCOON CREEK PARK	APARTMENT RANCH	17-2	INTERIOR		BEDROOM	1	60 Watt Incandescent 2-Lamp Fixture	120	0.120	444	1	Re-Lamp with (2) 10 Watt LED A19	20	0.020	74
RACCOON CREEK PARK	APARTMENT RANCH	17-2	INTERIOR		BEDROOM	1	60 Watt Incandescent 2-Lamp Fixture	120	0.120	444	1	Re-Lamp with (2) 10 Watt LED A19	20	0.020	74
RACCOON CREEK PARK	APARTMENT RANCH	17-2	EXTERIOR		EXTERIOR	2	23 Watt Compact Fluorescent 2-Lamp PAR38	46	0.092	403	2	Re-Lamp with (2) 17 Watt LED PAR38	34	0.068	298
RACCOON CREEK PARK	CHALET RANCE	17-1	INTERIOR		KITCHEN	1	Existing LED Fixture; No Retrofit	40	0.040	148	1	No Retrofit	40	0.040	148
RACCOON CREEK PARK	CHALET RANCE	17-1	INTERIOR		KITCHEN	1	23 Watt Compact Fluorescent 4-Lamp Fixture	92	0.092	341	1	Re-Lamp with (4) 10 Watt LED A19	40	0.040	148
RACCOON CREEK PARK	CHALET RANCE	17-1	INTERIOR		LIVING ROOM	2	13 Watt Compact Fluorescent 4-Lamp Fixture	52	0.104	385	2	Re-Lamp with (4) 10 Watt LED A19	40	0.080	296

©2013 Energy Systems Group, LLC

EXISTING FIXTURES												PROPOSED FIXTURE UPGRADE				
Park/Building Name	Building	Building #	Phase	Floor	Room Description	Qty	Description	Watts	kW	kWh	Qty	Description	Watts	kW	kWh
RACCOON CREEK PARK	CHALET RANCE	17-1	INTERIOR		LIVING ROOM	1	13 Watt Compact Fluorescent Fixture	13	0.013	48	1	Re-Lamp with (1) 10 Watt LED A19	10	0.010	37
RACCOON CREEK PARK	CHALET RANCE	17-1	INTERIOR		BASEMENT	7	100 Watt Incandescent A-Lamp Fixture	100	0.700	2,593	7	Re-Lamp with (1) 18 Watt LED A21	18	0.126	467
RACCOON CREEK PARK	CHALET RANCE	17-1	INTERIOR		BASEMENT	6	T12 2x4 2-Lamp Troffer Fixture	78	0.468	1,733	6	Retrofit with (2) 12.5 Watt LED T8 4' Lamps; Direct Wire to Socket	25	0.150	556
RACCOON CREEK PARK	CHALET RANCE	17-1	INTERIOR		BASEMENT	1	90 Watt Incandescent PAR38 Fixture	90	0.090	333	1	Re-Lamp with (1) 17 Watt LED PAR38	17	0.017	63
RACCOON CREEK PARK	CHALET RANCE	17-1	INTERIOR		BASEMENT	4	13 Watt Compact Fluorescent Fixture	13	0.052	193	4	Re-Lamp with (1) 10 Watt LED A19	10	0.040	148
RACCOON CREEK PARK	CHALET RANCE	17-1	INTERIOR		RESTROOM	1	13 Watt Compact Fluorescent 4-Lamp Fixture	52	0.052	193	1	Re-Lamp with (4) 10 Watt LED A19	40	0.040	148
RACCOON CREEK PARK	CHALET RANCE	17-1	INTERIOR		RESTROOM	1	23 Watt Compact Fluorescent Fixture	23	0.023	85	1	Re-Lamp with (1) 10 Watt LED A19	10	0.010	37
RACCOON CREEK PARK	CHALET RANCE	17-1	INTERIOR		PANTRY	1	13 Watt Compact Fluorescent Fixture	13	0.013	13	1	Re-Lamp with (1) 10 Watt LED A19	10	0.010	10
RACCOON CREEK PARK	CHALET RANCE	17-1	INTERIOR		PANTRY	1	13 Watt Compact Fluorescent 2-Lamp Fixture	26	0.026	26	1	Re-Lamp with (2) 10 Watt LED A19	20	0.020	20
RACCOON CREEK PARK	CHALET RANCE	17-1	INTERIOR		RESTROOM	2	13 Watt Compact Fluorescent Fixture	13	0.026	96	2	Re-Lamp with (1) 10 Watt LED A19	10	0.020	74
RACCOON CREEK PARK	CHALET RANCE	17-1	INTERIOR		RESTROOM	2	90 Watt Incandescent PAR38 Fixture	90	0.180	667	2	Re-Lamp with (1) 17 Watt LED PAR38	17	0.034	126
RACCOON CREEK PARK	CHALET RANCE	17-1	INTERIOR		HALLWAY	1	23 Watt Compact Fluorescent Fixture	23	0.023	85	1	Re-Lamp with (1) 10 Watt LED A19	10	0.010	37
RACCOON CREEK PARK	CHALET RANCE	17-1	INTERIOR		OFFICE	1	T12 1x4 2-Lamp Wrap Fixture	72	0.072	267	1	Retrofit with (2) 12.5 Watt LED T8 4' Lamps; Direct Wire to Socket	25	0.025	93
RACCOON CREEK PARK	CHALET RANCE	17-1	INTERIOR		BEDROOM	1	13 Watt Compact Fluorescent 4-Lamp Fixture	52	0.052	193	1	Re-Lamp with (4) 10 Watt LED A19	40	0.040	148
RACCOON CREEK PARK	CHALET RANCE	17-1	INTERIOR		BEDROOM	1	13 Watt Compact Fluorescent 4-Lamp Fixture	52	0.052	193	1	Re-Lamp with (4) 10 Watt LED A19	40	0.040	148
RACCOON CREEK PARK	CHALET RANCE	17-1	INTERIOR		BEDROOM	2	13 Watt Compact Fluorescent Fixture	13	0.026	96	2	Re-Lamp with (1) 10 Watt LED A19	10	0.020	74
RACCOON CREEK PARK	CHALET RANCE	17-1	INTERIOR		CLOSET	2	13 Watt Compact Fluorescent Fixture	13	0.026	26	2	Re-Lamp with (1) 10 Watt LED A19	10	0.020	20
RACCOON CREEK PARK	CHALET RANCE	17-1	INTERIOR		CLOSET	2	13 Watt Compact Fluorescent Fixture	13	0.026	26	2	Re-Lamp with (1) 10 Watt LED A19	10	0.020	20
RACCOON CREEK PARK	CHALET RANCE	17-1	EXTERIOR		EXTERIOR	5	13 Watt Compact Fluorescent Fixture	13	0.065	285	5	Re-Lamp with (1) 10 Watt LED A19	10	0.050	219
RACCOON CREEK PARK	CHALET RANCE	17-1	EXTERIOR		EXTERIOR	2	23 Watt Compact Fluorescent 2-Lamp PAR38	46	0.092	403	2	Re-Lamp with (2) 17 Watt LED PAR38	34	0.068	298
RACCOON CREEK PARK	INTERPRETIVE NATURE CENTER	16-2	INTERIOR		MEETING ROOM	3	Existing LED Fixture; No Retrofit	60	0.180	405	3	No Retrofit	60	0.180	405
RACCOON CREEK PARK	INTERPRETIVE NATURE CENTER	16-2	INTERIOR		MEETING ROOM	2	Existing LED Fixture; No Retrofit	30	0.060	135	2	No Retrofit	30	0.060	135
RACCOON CREEK PARK	INTERPRETIVE NATURE CENTER	16-2	INTERIOR		MEETING ROOM	4	T8 1x4 2-Lamp Wrap Fixture	62	0.248	558	4	Retrofit with (2) 12.5 Watt LED T8 4' Lamps; Direct Wire to Socket	25	0.100	225
RACCOON CREEK PARK	INTERPRETIVE NATURE CENTER	16-2	INTERIOR		OFFICE	3	Existing LED Fixture; No Retrofit	60	0.180	405	3	No Retrofit	60	0.180	405
RACCOON CREEK PARK	INTERPRETIVE NATURE CENTER	16-2	INTERIOR		MECHANICAL	1	23 Watt Compact Fluorescent Fixture; Difficult Access	23	0.023	23	1	Relamp with (1) 10 Watt LED A19; Difficult Access	10	0.010	10
RACCOON CREEK PARK	INTERPRETIVE NATURE CENTER	16-2	INTERIOR		BACK OFFICE	2	Existing LED Fixture; No Retrofit	30	0.060	135	2	No Retrofit	30	0.060	135

©2013 Energy Systems Group, LLC

EXISTING FIXTURES												PROPOSED FIXTURE UPGRADE				
Park/Building Name	Building	Building #	Phase	Floor	Room Description	Qty	Description	Watts	kW	kWh	Qty	Description	Watts	kW	kWh
RACCOON CREEK PARK	INTERPRETIVE NATURE CENTER	16-2	INTERIOR		COPY ROOM	2	Existing LED Fixture; No Retrofit	30	0.060	135	2	No Retrofit	30	0.060	135
RACCOON CREEK PARK	INTERPRETIVE NATURE CENTER	16-2	INTERIOR		ATTIC	3	23 Watt Compact Fluorescent Fixture	23	0.069	69	3	Re-Lamp with (1) 10 Watt LED A19	10	0.030	30
RACCOON CREEK PARK	INTERPRETIVE NATURE CENTER	16-2	INTERIOR		SIDE OFFICE	1	Existing LED Fixture; No Retrofit	30	0.030	67	1	No Retrofit	30	0.030	67
RACCOON CREEK PARK	INTERPRETIVE NATURE CENTER	16-2	INTERIOR		MENS RESTROOM	2	Existing LED Fixture; No Retrofit	10	0.020	45	2	No Retrofit	10	0.020	45
RACCOON CREEK PARK	INTERPRETIVE NATURE CENTER	16-2	INTERIOR		WOMENS RESTROOM	2	Existing LED Fixture; No Retrofit	10	0.020	45	2	No Retrofit	10	0.020	45
RACCOON CREEK PARK	INTERPRETIVE NATURE CENTER	16-2	EXTERIOR		EXTERIOR	3	Existing LED Fixture; No Retrofit	10	0.030	131	3	No Retrofit	10	0.030	131
RACCOON CREEK PARK	INTERPRETIVE NATURE CENTER	16-2	EXTERIOR		EXTERIOR	1	23 Watt Compact Fluorescent 2-Lamp PAR38	46	0.046	201	1	Re-Lamp with (2) 17 Watt LED PAR38	34	0.034	149
RACCOON CREEK PARK	INTERPRETIVE NATURE CENTER	16-2	EXTERIOR		EXTERIOR	1	Existing LED Fixture; No Retrofit	10	0.010	44	1	No Retrofit	10	0.010	44
RACCOON CREEK PARK	INTERPRETIVE NATURE CENTER	16-2	EXTERIOR		EXTERIOR	1	13 Watt Compact Fluorescent Fixture	13	0.013	57	1	Re-Lamp with (1) 10 Watt LED A19	10	0.010	44
RACCOON CREEK PARK	INTERPRETIVE NATURE CENTER	16-2	EXTERIOR		EXTERIOR	1	Existing LED Fixture; No Retrofit	40	0.040	175	1	No Retrofit	40	0.040	175
RACCOON CREEK PARK	WFR RESIDENCE	16-1	INTERIOR		KITCHEN	1	23 Watt Compact Fluorescent Fixture	23	0.023	85	1	Re-Lamp with (1) 10 Watt LED A19	10	0.010	37
RACCOON CREEK PARK	WFR RESIDENCE	16-1	INTERIOR		KITCHEN	3	23 Watt Compact Fluorescent Fixture	23	0.069	256	3	Re-Lamp with (1) 10 Watt LED A19	10	0.030	111
RACCOON CREEK PARK	WFR RESIDENCE	16-1	INTERIOR		KITCHEN	7	23 Watt Compact Fluorescent Downlight	23	0.161	596	7	Re-Lamp with (1) 10 Watt LED BR30	10	0.070	259
RACCOON CREEK PARK	WFR RESIDENCE	16-1	INTERIOR		LIVING ROOM	4	23 Watt Compact Fluorescent Downlight	23	0.092	341	4	Re-Lamp with (1) 10 Watt LED BR30	10	0.040	148
RACCOON CREEK PARK	WFR RESIDENCE	16-1	INTERIOR		DINING	2	23 Watt Compact Fluorescent Downlight	23	0.046	170	2	Re-Lamp with (1) 10 Watt LED BR30	10	0.020	74
RACCOON CREEK PARK	WFR RESIDENCE	16-1	INTERIOR		LAUNDRY	1	T12 1x4 2-Lamp Wrap Fixture	72	0.072	267	1	Retrofit with (2) 12.5 Watt LED T8 4' Lamps; Direct Wire to Socket	25	0.025	93
RACCOON CREEK PARK	WFR RESIDENCE	16-1	INTERIOR		RESTROOM	1	23 Watt Compact Fluorescent 3-Lamp Fixture	69	0.069	256	1	Re-Lamp with (3) 10 Watt LED A19	30	0.030	111
RACCOON CREEK PARK	WFR RESIDENCE	16-1	INTERIOR		STAIRS	2	23 Watt Compact Fluorescent 2-Lamp Fixture; Very Difficult Access	46	0.092	341	2	Relamp with (2) 10 Watt LED A19 Lamps; Very Difficult Access	20	0.040	148
RACCOON CREEK PARK	WFR RESIDENCE	16-1	INTERIOR		BASEMENT STORAGE	2	23 Watt Compact Fluorescent 2-Lamp Fixture	46	0.092	92	2	Re-Lamp with (2) 10 Watt LED A19	20	0.040	40
RACCOON CREEK PARK	WFR RESIDENCE	16-1	INTERIOR		RESTROOM	2	23 Watt Compact Fluorescent 2-Lamp Fixture	46	0.092	341	2	Re-Lamp with (2) 10 Watt LED A19	20	0.040	148
RACCOON CREEK PARK	WFR RESIDENCE	16-1	INTERIOR		STORAGE	2	T12 1x4 2-Lamp Wrap Fixture	72	0.144	144	2	Retrofit with (2) 12.5 Watt LED T8 4' Lamps; Direct Wire to Socket	25	0.050	50
RACCOON CREEK PARK	WFR RESIDENCE	16-1	INTERIOR		STORAGE	2	23 Watt Compact Fluorescent Fixture	23	0.046	46	2	Re-Lamp with (1) 10 Watt LED A19	10	0.020	20
RACCOON CREEK PARK	WFR RESIDENCE	16-1	INTERIOR		HALLWAY	1	23 Watt Compact Fluorescent 2-Lamp Fixture	46	0.046	170	1	Re-Lamp with (2) 10 Watt LED A19	20	0.020	74
RACCOON CREEK PARK	WFR RESIDENCE	16-1	INTERIOR		FRONT STORAGE	1	T12 1x4 4-Lamp Wrap Fixture	144	0.144	144	1	Retrofit with (4) 12.5 Watt LED T8 4' Lamps; Direct Wire to Socket	50	0.050	50
RACCOON CREEK PARK	WFR RESIDENCE	16-1	INTERIOR		FRONT STORAGE	3	T12 1x4 4-Lamp Wrap Fixture	144	0.432	432	3	Retrofit with (4) 12.5 Watt LED T8 4' Lamps; Direct Wire to Socket	50	0.150	150
RACCOON CREEK PARK	WFR RESIDENCE	16-1	INTERIOR		HALLWAY	1	23 Watt Compact Fluorescent Fixture	23	0.023	85	1	Re-Lamp with (1) 10 Watt LED A19	10	0.010	37

©2013 Energy Systems Group, LLC

EXISTING FIXTURES												PROPOSED FIXTURE UPGRADE				
Park/Building Name	Building	Building #	Phase	Floor	Room Description	Qty	Description	Watts	kW	kWh	Qty	Description	Watts	kW	kWh
RACCOON CREEK PARK	WFR RESIDENCE	16-1	INTERIOR		RESTROOM	2	23 Watt Compact Fluorescent Downlight	23	0.046	170	2	Re-Lamp with (1) 10 Watt LED BR30	10	0.020	74
RACCOON CREEK PARK	WFR RESIDENCE	16-1	INTERIOR		BEDROOM	1	23 Watt Compact Fluorescent 2-Lamp Fixture	46	0.046	170	1	Re-Lamp with (2) 10 Watt LED A19	20	0.020	74
RACCOON CREEK PARK	WFR RESIDENCE	16-1	INTERIOR		CLOSET	1	Circline Fixture; No Retrofit	30	0.030	30	1	No Retrofit	30	0.030	30
RACCOON CREEK PARK	WFR RESIDENCE	16-1	INTERIOR		BEDROOM	1	23 Watt Compact Fluorescent 2-Lamp Fixture	46	0.046	170	1	Re-Lamp with (2) 10 Watt LED A19	20	0.020	74
RACCOON CREEK PARK	WFR RESIDENCE	16-1	INTERIOR		BEDROOM	1	T8 1xt 4-Lamp Wrap Fixture	106	0.106	393	1	Retrofit with (4) 12.5 Watt LED T8 4' Lamps; Direct Wire to Socket	50	0.050	185
RACCOON CREEK PARK	WFR RESIDENCE	16-1	INTERIOR		BEDROOM	2	23 Watt Compact Fluorescent Fixture	23	0.046	170	2	Re-Lamp with (1) 10 Watt LED A19	10	0.020	74
RACCOON CREEK PARK	WFR RESIDENCE	16-1	EXTERIOR		EXTERIOR	2	23 Watt Compact Fluorescent Fixture	23	0.046	201	2	Re-Lamp with (1) 10 Watt LED A19	10	0.020	88
RACCOON CREEK PARK	WFR RESIDENCE	16-1	EXTERIOR		EXTERIOR	3	23 Watt Compact Fluorescent Fixture	23	0.069	302	3	Re-Lamp with (1) 10 Watt LED A19	10	0.030	131
RACCOON CREEK PARK	AMPHITHEATER	4-7	INTERIOR		AMPHITHEATER	2	23 Watt Compact Fluorescent Fixture	23	0.046	46	2	Re-Lamp with (1) 10 Watt LED A19	10	0.020	20
RACCOON CREEK PARK	AMPHITHEATER	4-7	EXTERIOR		AMPHITHEATER	2	23 Watt Compact Fluorescent 2-Lamp PAR38	46	0.092	132	2	Re-Lamp with (2) 17 Watt LED PAR38	34	0.068	98
RACCOON CREEK PARK	WFR GARAGE	16-4	INTERIOR		WFR GARAGE	4	23 Watt Compact Fluorescent Fixture	23	0.092	341	4	Re-Lamp with (1) 10 Watt LED A19	10	0.040	148
RACCOON CREEK PARK	WFR GARAGE	16-4	EXTERIOR		WFR GARAGE	1	23 Watt Compact Fluorescent 2-Lamp PAR38	46	0.046	201	1	Re-Lamp with (2) 17 Watt LED PAR38	34	0.034	149
RACCOON CREEK PARK	LINSLY RESIDENCE	14-4	INTERIOR		LIVING ROOM	1	40 Watt Incandescent 3-Lamp Fixture	120	0.120	444	1	Re-Lamp with (3) 7 Watt LED A19	21	0.021	78
RACCOON CREEK PARK	LINSLY RESIDENCE	14-4	INTERIOR		DINING	1	60 Watt Incandescent 3-Lamp Fixture	180	0.180	667	1	Re-Lamp with (3) 10 Watt LED A19	30	0.030	111
RACCOON CREEK PARK	LINSLY RESIDENCE	14-4	INTERIOR		KITCHEN	1	Existing LED Fixture; No Retrofit	40	0.040	148	1	No Retrofit	40	0.040	148
RACCOON CREEK PARK	LINSLY RESIDENCE	14-4	INTERIOR		KITCHEN	2	Existing LED Fixture; No Retrofit	40	0.080	296	2	No Retrofit	40	0.080	296
RACCOON CREEK PARK	LINSLY RESIDENCE	14-4	INTERIOR		MECHANICAL	2	23 Watt Compact Fluorescent Fixture	23	0.046	46	2	Re-Lamp with (1) 10 Watt LED A19	10	0.020	20
RACCOON CREEK PARK	LINSLY RESIDENCE	14-4	INTERIOR		HALLWAY	2	13 Watt Compact Fluorescent Fixture	13	0.026	96	2	Re-Lamp with (1) 10 Watt LED A19	10	0.020	74
RACCOON CREEK PARK	LINSLY RESIDENCE	14-4	INTERIOR		RESTROOM	1	18 Watt Compact Fluorescent 2-Lamp Globe Fixture	36	0.036	133	1	Re-Lamp with (2) 8 Watt LED G25 Globe	16	0.016	59
RACCOON CREEK PARK	LINSLY RESIDENCE	14-4	INTERIOR		RESTROOM	1	60 Watt Incandescent A-Lamp Fixture	60	0.060	222	1	Re-Lamp with (1) 10 Watt LED A19	10	0.010	37
RACCOON CREEK PARK	LINSLY RESIDENCE	14-4	INTERIOR		BEDROOM	1	100 Watt Incandescent A-Lamp Fixture	100	0.100	370	1	Re-Lamp with (1) 18 Watt LED A21	18	0.018	67
RACCOON CREEK PARK	LINSLY RESIDENCE	14-4	INTERIOR		CLOSET	1	Existing LED Fixture; No Retrofit	10	0.010	10	1	No Retrofit	10	0.010	10
RACCOON CREEK PARK	LINSLY RESIDENCE	14-4	INTERIOR		BEDROOM	1	60 Watt Incandescent Globe Fixture	60	0.060	222	1	Re-Lamp with (1) 8 Watt LED G25 Globe	8	0.008	30
RACCOON CREEK PARK	LINSLY RESIDENCE	14-4	INTERIOR		RESTROOM	1	60 Watt Incandescent 2-Lamp Globe Fixture	120	0.120	444	1	Re-Lamp with (2) 8 Watt LED G25 Globe	16	0.016	59
RACCOON CREEK PARK	LINSLY RESIDENCE	14-4	INTERIOR		RESTROOM	1	Existing LED Fixture; No Retrofit	10	0.010	37	1	No Retrofit	10	0.010	37
RACCOON CREEK PARK	LINSLY RESIDENCE	14-4	INTERIOR		RESTROOM	1	60 Watt Incandescent A-Lamp Fixture	60	0.060	222	1	Re-Lamp with (1) 10 Watt LED A19	10	0.010	37

©2013 Energy Systems Group, LLC

EXISTING FIXTURES												PROPOSED FIXTURE UPGRADE				
Park/Building Name	Building	Building #	Phase	Floor	Room Description	Qty	Description	Watts	kW	kWh	Qty	Description	Watts	kW	kWh
RACCOON CREEK PARK	LINSLY RESIDENCE	14-4	INTERIOR		BEDROOM	1	60 Watt Incandescent 2-Lamp Fixture	120	0.120	444	1	Re-Lamp with (2) 10 Watt LED A19	20	0.020	74
RACCOON CREEK PARK	LINSLY RESIDENCE	14-4	INTERIOR		CLOSET	1	Existing LED Fixture; No Retrofit	10	0.010	10	1	No Retrofit	10	0.010	10
RACCOON CREEK PARK	LINSLY RESIDENCE	14-4	INTERIOR		STORAGE	2	23 Watt Compact Fluorescent Fixture	23	0.046	46	2	Re-Lamp with (1) 10 Watt LED A19	10	0.020	20
RACCOON CREEK PARK	LINSLY RESIDENCE	14-4	INTERIOR		GARAGE	1	23 Watt Compact Fluorescent Fixture	23	0.023	23	1	Re-Lamp with (1) 10 Watt LED A19	10	0.010	10
RACCOON CREEK PARK	LINSLY RESIDENCE	14-4	INTERIOR		GARAGE OPENER	2	13 Watt Compact Fluorescent Fixture	13	0.026	26	2	Re-Lamp with (1) 10 Watt LED A19	10	0.020	20
RACCOON CREEK PARK	LINSLY RESIDENCE	14-4	INTERIOR		GARAGE	1	T12 1x4 2-Lamp Wrap Fixture	72	0.072	72	1	Retrofit with (2) 12.5 Watt LED T8 4' Lamps; Direct Wire to Socket	25	0.025	25
RACCOON CREEK PARK	LINSLY RESIDENCE	14-4	INTERIOR		STORAGE	1	100 Watt Incandescent A-Lamp Fixture	100	0.100	100	1	Re-Lamp with (1) 18 Watt LED A21	18	0.018	18
RACCOON CREEK PARK	LINSLY RESIDENCE	14-4	EXTERIOR		EXTERIOR	2	23 Watt Compact Fluorescent 2-Lamp PAR38	46	0.092	403	2	Re-Lamp with (2) 17 Watt LED PAR38	34	0.068	298
RACCOON CREEK PARK	LINSLY RESIDENCE	14-4	EXTERIOR		EXTERIOR	1	23 Watt Compact Fluorescent PAR38 Fixture	23	0.023	101	1	Re-Lamp with (1) 17 Watt LED PAR38	17	0.017	74
RACCOON CREEK PARK	LODGE OGC2 UNIT 2	12-20	INTERIOR		CABIN	2	23 Watt Compact Fluorescent Fixture	23	0.046	170	2	Re-Lamp with (1) 10 Watt LED A19	10	0.020	74
RACCOON CREEK PARK	LODGE OGC2 UNIT 2	12-20	EXTERIOR		EXTERIOR	2	23 Watt Compact Fluorescent Fixture	23	0.046	201	2	Re-Lamp with (1) 10 Watt LED A19	10	0.020	88
RACCOON CREEK PARK	LODGE OGC2 UNIT 1	12-10	INTERIOR		CABIN	2	23 Watt Compact Fluorescent Fixture	23	0.046	170	2	Re-Lamp with (1) 10 Watt LED A19	10	0.020	74
RACCOON CREEK PARK	LODGE OGC2 UNIT 1	12-10	EXTERIOR		EXTERIOR	2	23 Watt Compact Fluorescent Fixture	23	0.046	201	2	Re-Lamp with (1) 10 Watt LED A19	10	0.020	88
RACCOON CREEK PARK	LODGE OGC2 UNIT 3	12-30	INTERIOR		CABIN	2	23 Watt Compact Fluorescent Fixture	23	0.046	170	2	Re-Lamp with (1) 10 Watt LED A19	10	0.020	74
RACCOON CREEK PARK	LODGE OGC2 UNIT 3	12-30	EXTERIOR		EXTERIOR	2	23 Watt Compact Fluorescent Fixture	23	0.046	201	2	Re-Lamp with (1) 10 Watt LED A19	10	0.020	88
RACCOON CREEK PARK	LODGE OGC2 UNIT 4	12-40	INTERIOR		CABIN	2	23 Watt Compact Fluorescent Fixture	23	0.046	170	2	Re-Lamp with (1) 10 Watt LED A19	10	0.020	74
RACCOON CREEK PARK	LODGE OGC2 UNIT 4	12-40	EXTERIOR		EXTERIOR	2	23 Watt Compact Fluorescent Fixture	23	0.046	201	2	Re-Lamp with (1) 10 Watt LED A19	10	0.020	88
RACCOON CREEK PARK	LODGE OGC2 SHOWER HOUSE	12-49	INTERIOR		UNIT 4	3	23 Watt Compact Fluorescent Fixture	23	0.069	316	3	Re-Lamp with (1) 10 Watt LED A19	10	0.030	137
RACCOON CREEK PARK	OGC2 SHOWER HOUSE	12-39	INTERIOR		UNIT 3	3	23 Watt Compact Fluorescent Fixture	23	0.069	316	3	Re-Lamp with (1) 10 Watt LED A19	10	0.030	137
RACCOON CREEK PARK	OGC2 SHOWER HOUSE	12-29	INTERIOR		UNIT 2	3	23 Watt Compact Fluorescent Fixture	23	0.069	316	3	Re-Lamp with (1) 10 Watt LED A19	10	0.030	137
RACCOON CREEK PARK	OGC2 SHOWER HOUSE	12-19	INTERIOR		UNIT 1	3	23 Watt Compact Fluorescent Fixture	23	0.069	316	3	Re-Lamp with (1) 10 Watt LED A19	10	0.030	137
RACCOON CREEK PARK	OGC2 HELPS QUARTERS	12-2	INTERIOR		CABIN	6	23 Watt Compact Fluorescent Fixture	23	0.138	381	6	Re-Lamp with (1) 10 Watt LED A19	10	0.060	166
RACCOON CREEK PARK	OGC2 HELPS QUARTERS	12-2	EXTERIOR		EXTERIOR	1	23 Watt Compact Fluorescent Fixture	23	0.023	101	1	Re-Lamp with (1) 10 Watt LED A19	10	0.010	44
RACCOON CREEK PARK	OGC2 HELPS QUARTERS	12-2	EXTERIOR		EXTERIOR	1	23 Watt Compact Fluorescent Fixture	23	0.023	101	1	Re-Lamp with (1) 10 Watt LED A19	10	0.010	44
RACCOON CREEK PARK	OGC2 CENTRAL SHOWER HOUSE	12-4	INTERIOR		MENS RESTROOM	1	13 Watt Compact Fluorescent Fixture	13	0.013	36	1	Re-Lamp with (1) 10 Watt LED A19	10	0.010	28
RACCOON CREEK PARK	OGC2 CENTRAL SHOWER HOUSE	12-4	INTERIOR		MENS RESTROOM	2	23 Watt Compact Fluorescent Fixture	23	0.046	127	2	Re-Lamp with (1) 10 Watt LED A19	10	0.020	55

©2013 Energy Systems Group, LLC

EXISTING FIXTURES												PROPOSED FIXTURE UPGRADE				
Park/Building Name	Building	Building #	Phase	Floor	Room Description	Qty	Description	Watts	kW	kWh	Qty	Description	Watts	kW	kWh
RACCOON CREEK PARK	OGC2 CENTRAL SHOWER HOUSE	12-4	INTERIOR		WOMENS RESTROOM	2	23 Watt Compact Fluorescent Fixture	23	0.046	127	2	Re-Lamp with (1) 10 Watt LED A19	10	0.020	55
RACCOON CREEK PARK	OGC2 INFIRMARY	12-5	INTERIOR		ROOM	1	100 Watt Incandescent A-Lamp Fixture	100	0.100	225	1	Re-Lamp with (1) 18 Watt LED A21	18	0.018	40
RACCOON CREEK PARK	OGC2 INFIRMARY	12-5	INTERIOR		ROOM	1	23 Watt Compact Fluorescent Fixture	23	0.023	52	1	Re-Lamp with (1) 10 Watt LED A19	10	0.010	22
RACCOON CREEK PARK	FAMILY CABIN 6	11-56	INTERIOR		KITCHEN	1	23 Watt Compact Fluorescent Fixture	23	0.023	85	1	Re-Lamp with (1) 10 Watt LED A19	10	0.010	37
RACCOON CREEK PARK	FAMILY CABIN 6	11-56	INTERIOR		KITCHEN	1	13 Watt Compact Fluorescent 3-Lamp Fixture	39	0.039	144	1	Re-Lamp with (3) 10 Watt LED A19	30	0.030	111
RACCOON CREEK PARK	FAMILY CABIN 6	11-56	INTERIOR		SINK	1	1-Lamp F15 Undercabinet; No Retrofit	15	0.015	56	1	No Retrofit	15	0.015	56
RACCOON CREEK PARK	FAMILY CABIN 6	11-56	INTERIOR		HALLWAY	1	13 Watt Compact Fluorescent 2-Lamp Fixture	26	0.026	96	1	Re-Lamp with (2) 10 Watt LED A19	20	0.020	74
RACCOON CREEK PARK	FAMILY CABIN 6	11-56	INTERIOR		BEDROOM	1	13 Watt Compact Fluorescent 2-Lamp Fixture	26	0.026	96	1	Re-Lamp with (2) 10 Watt LED A19	20	0.020	74
RACCOON CREEK PARK	FAMILY CABIN 6	11-56	INTERIOR		BEDROOM	1	13 Watt Compact Fluorescent 2-Lamp Fixture	26	0.026	96	1	Re-Lamp with (2) 10 Watt LED A19	20	0.020	74
RACCOON CREEK PARK	FAMILY CABIN 6	11-56	INTERIOR		RESTROOM	1	13 Watt Compact Fluorescent 3-Lamp Fixture	39	0.039	144	1	Re-Lamp with (3) 10 Watt LED A19	30	0.030	111
RACCOON CREEK PARK	FAMILY CABIN 6	11-56	INTERIOR		SHOWER	1	13 Watt Compact Fluorescent Downlight	13	0.013	48	1	Re-Lamp with (1) 10 Watt LED BR30	10	0.010	37
RACCOON CREEK PARK	FAMILY CABIN 6	11-56	INTERIOR		SHOWER	1	13 Watt Compact Fluorescent Fixture	13	0.013	48	1	Re-Lamp with (1) 10 Watt LED A19	10	0.010	37
RACCOON CREEK PARK	FAMILY CABIN 6	11-56	INTERIOR		TABLE LAMPS	4	13 Watt Compact Fluorescent Fixture	13	0.052	193	4	Re-Lamp with (1) 10 Watt LED A19	10	0.040	148
RACCOON CREEK PARK	FAMILY CABIN 6	11-56	INTERIOR		BEDROOM	1	13 Watt Compact Fluorescent 2-Lamp Fixture	26	0.026	96	1	Re-Lamp with (2) 10 Watt LED A19	20	0.020	74
RACCOON CREEK PARK	FAMILY CABIN 6	11-56	EXTERIOR		PORCH	2	23 Watt Compact Fluorescent 2-Lamp Fixture	46	0.092	403	2	Re-Lamp with (2) 10 Watt LED A19	20	0.040	175
RACCOON CREEK PARK	FAMILY CABIN 4	11-54	INTERIOR		KITCHEN	1	23 Watt Compact Fluorescent Fixture	23	0.023	85	1	Re-Lamp with (1) 10 Watt LED A19	10	0.010	37
RACCOON CREEK PARK	FAMILY CABIN 4	11-54	INTERIOR		KITCHEN	1	13 Watt Compact Fluorescent 3-Lamp Fixture	39	0.039	144	1	Re-Lamp with (3) 10 Watt LED A19	30	0.030	111
RACCOON CREEK PARK	FAMILY CABIN 4	11-54	INTERIOR		SINK	1	1-Lamp F15 Undercabinet; No Retrofit	15	0.015	56	1	No Retrofit	15	0.015	56
RACCOON CREEK PARK	FAMILY CABIN 4	11-54	INTERIOR		HALLWAY	1	13 Watt Compact Fluorescent 2-Lamp Fixture	26	0.026	96	1	Re-Lamp with (2) 10 Watt LED A19	20	0.020	74
RACCOON CREEK PARK	FAMILY CABIN 4	11-54	INTERIOR		BEDROOM	1	13 Watt Compact Fluorescent 2-Lamp Fixture	26	0.026	96	1	Re-Lamp with (2) 10 Watt LED A19	20	0.020	74
RACCOON CREEK PARK	FAMILY CABIN 4	11-54	INTERIOR		BEDROOM	1	13 Watt Compact Fluorescent 2-Lamp Fixture	26	0.026	96	1	Re-Lamp with (2) 10 Watt LED A19	20	0.020	74
RACCOON CREEK PARK	FAMILY CABIN 4	11-54	INTERIOR		RESTROOM	1	13 Watt Compact Fluorescent 3-Lamp Fixture	39	0.039	144	1	Re-Lamp with (3) 10 Watt LED A19	30	0.030	111
RACCOON CREEK PARK	FAMILY CABIN 4	11-54	INTERIOR		SHOWER	1	13 Watt Compact Fluorescent Downlight	13	0.013	48	1	Re-Lamp with (1) 10 Watt LED BR30	10	0.010	37
RACCOON CREEK PARK	FAMILY CABIN 4	11-54	INTERIOR		SHOWER	1	13 Watt Compact Fluorescent Fixture	13	0.013	48	1	Re-Lamp with (1) 10 Watt LED A19	10	0.010	37
RACCOON CREEK PARK	FAMILY CABIN 4	11-54	INTERIOR		TABLE LAMPS	4	13 Watt Compact Fluorescent Fixture	13	0.052	193	4	Re-Lamp with (1) 10 Watt LED A19	10	0.040	148
RACCOON CREEK PARK	FAMILY CABIN 4	11-54	EXTERIOR		PORCH	2	23 Watt Compact Fluorescent 2-Lamp Fixture	46	0.092	403	2	Re-Lamp with (2) 10 Watt LED A19	20	0.040	175

©2013 Energy Systems Group, LLC

EXISTING FIXTURES												PROPOSED FIXTURE UPGRADE				
Park/Building Name	Building	Building #	Phase	Floor	Room Description	Qty	Description	Watts	kW	kWh	Qty	Description	Watts	kW	kWh
RACCOON CREEK PARK	FAMILY CABIN 10	11-60	INTERIOR		KITCHEN	1	23 Watt Compact Fluorescent Fixture	23	0.023	85	1	Re-Lamp with (1) 10 Watt LED A19	10	0.010	37
RACCOON CREEK PARK	FAMILY CABIN 10	11-60	INTERIOR		KITCHEN	1	13 Watt Compact Fluorescent 3-Lamp Fixture	39	0.039	144	1	Re-Lamp with (3) 10 Watt LED A19	30	0.030	111
RACCOON CREEK PARK	FAMILY CABIN 10	11-60	INTERIOR		SINK	1	1-Lamp F15 Undercabinet; No Retrofit	15	0.015	56	1	No Retrofit	15	0.015	56
RACCOON CREEK PARK	FAMILY CABIN 10	11-60	INTERIOR		HALLWAY	1	13 Watt Compact Fluorescent 2-Lamp Fixture	26	0.026	96	1	Re-Lamp with (2) 10 Watt LED A19	20	0.020	74
RACCOON CREEK PARK	FAMILY CABIN 10	11-60	INTERIOR		BEDROOM	1	13 Watt Compact Fluorescent 2-Lamp Fixture	26	0.026	96	1	Re-Lamp with (2) 10 Watt LED A19	20	0.020	74
RACCOON CREEK PARK	FAMILY CABIN 10	11-60	INTERIOR		BEDROOM	1	13 Watt Compact Fluorescent 2-Lamp Fixture	26	0.026	96	1	Re-Lamp with (2) 10 Watt LED A19	20	0.020	74
RACCOON CREEK PARK	FAMILY CABIN 10	11-60	INTERIOR		RESTROOM	1	13 Watt Compact Fluorescent 3-Lamp Fixture	39	0.039	144	1	Re-Lamp with (3) 10 Watt LED A19	30	0.030	111
RACCOON CREEK PARK	FAMILY CABIN 10	11-60	INTERIOR		SHOWER	1	13 Watt Compact Fluorescent Downlight	13	0.013	48	1	Re-Lamp with (1) 10 Watt LED BR30	10	0.010	37
RACCOON CREEK PARK	FAMILY CABIN 10	11-60	INTERIOR		SHOWER	1	13 Watt Compact Fluorescent Fixture	13	0.013	48	1	Re-Lamp with (1) 10 Watt LED A19	10	0.010	37
RACCOON CREEK PARK	FAMILY CABIN 10	11-60	INTERIOR		TABLE LAMPS	4	13 Watt Compact Fluorescent Fixture	13	0.052	193	4	Re-Lamp with (1) 10 Watt LED A19	10	0.040	148
RACCOON CREEK PARK	FAMILY CABIN 10	11-60	EXTERIOR		PORCH	2	23 Watt Compact Fluorescent 2-Lamp Fixture	46	0.092	403	2	Re-Lamp with (2) 10 Watt LED A19	20	0.040	175
RACCOON CREEK PARK	FAMILY CABIN 3	11-53	INTERIOR		KITCHEN	1	23 Watt Compact Fluorescent Fixture	23	0.023	85	1	Re-Lamp with (1) 10 Watt LED A19	10	0.010	37
RACCOON CREEK PARK	FAMILY CABIN 3	11-53	INTERIOR		KITCHEN	1	13 Watt Compact Fluorescent 3-Lamp Fixture	39	0.039	144	1	Re-Lamp with (3) 10 Watt LED A19	30	0.030	111
RACCOON CREEK PARK	FAMILY CABIN 3	11-53	INTERIOR		SINK	1	1-Lamp F15 Undercabinet; No Retrofit	15	0.015	56	1	No Retrofit	15	0.015	56
RACCOON CREEK PARK	FAMILY CABIN 3	11-53	INTERIOR		HALLWAY	1	13 Watt Compact Fluorescent 2-Lamp Fixture	26	0.026	96	1	Re-Lamp with (2) 10 Watt LED A19	20	0.020	74
RACCOON CREEK PARK	FAMILY CABIN 3	11-53	INTERIOR		BEDROOM	1	13 Watt Compact Fluorescent 2-Lamp Fixture	26	0.026	96	1	Re-Lamp with (2) 10 Watt LED A19	20	0.020	74
RACCOON CREEK PARK	FAMILY CABIN 3	11-53	INTERIOR		BEDROOM	1	13 Watt Compact Fluorescent 2-Lamp Fixture	26	0.026	96	1	Re-Lamp with (2) 10 Watt LED A19	20	0.020	74
RACCOON CREEK PARK	FAMILY CABIN 3	11-53	INTERIOR		RESTROOM	1	13 Watt Compact Fluorescent 3-Lamp Fixture	39	0.039	144	1	Re-Lamp with (3) 10 Watt LED A19	30	0.030	111
RACCOON CREEK PARK	FAMILY CABIN 3	11-53	INTERIOR		SHOWER	1	13 Watt Compact Fluorescent Downlight	13	0.013	48	1	Re-Lamp with (1) 10 Watt LED BR30	10	0.010	37
RACCOON CREEK PARK	FAMILY CABIN 3	11-53	INTERIOR		SHOWER	1	13 Watt Compact Fluorescent Fixture	13	0.013	48	1	Re-Lamp with (1) 10 Watt LED A19	10	0.010	37
RACCOON CREEK PARK	FAMILY CABIN 3	11-53	INTERIOR		TABLE LAMPS	4	13 Watt Compact Fluorescent Fixture	13	0.052	193	4	Re-Lamp with (1) 10 Watt LED A19	10	0.040	148
RACCOON CREEK PARK	FAMILY CABIN 3	11-53	EXTERIOR		PORCH	2	23 Watt Compact Fluorescent 2-Lamp Fixture	46	0.092	403	2	Re-Lamp with (2) 10 Watt LED A19	20	0.040	175
RACCOON CREEK PARK	FAMILY CABIN 9	11-59	INTERIOR		KITCHEN	1	23 Watt Compact Fluorescent Fixture	23	0.023	85	1	Re-Lamp with (1) 10 Watt LED A19	10	0.010	37
RACCOON CREEK PARK	FAMILY CABIN 9	11-59	INTERIOR		KITCHEN	1	13 Watt Compact Fluorescent 3-Lamp Fixture	39	0.039	144	1	Re-Lamp with (3) 10 Watt LED A19	30	0.030	111
RACCOON CREEK PARK	FAMILY CABIN 9	11-59	INTERIOR		SINK	1	1-Lamp F15 Undercabinet; No Retrofit	15	0.015	56	1	No Retrofit	15	0.015	56
RACCOON CREEK PARK	FAMILY CABIN 9	11-59	INTERIOR		HALLWAY	1	13 Watt Compact Fluorescent 2-Lamp Fixture	26	0.026	96	1	Re-Lamp with (2) 10 Watt LED A19	20	0.020	74

©2013 Energy Systems Group, LLC

EXISTING FIXTURES											PROPOSED FIXTURE UPGRADE				
Park/Building Name	Building	Building #	Phase	Floor	Room Description	Qty	Description	Watts	kW	kWh	Qty	Description	Watts	kW	kWh
RACCOON CREEK PARK	FAMILY CABIN 9	11-59	INTERIOR		BEDROOM	1	13 Watt Compact Fluorescent 2-Lamp Fixture	26	0.026	96	1	Re-Lamp with (2) 10 Watt LED A19	20	0.020	74
RACCOON CREEK PARK	FAMILY CABIN 9	11-59	INTERIOR		BEDROOM	1	13 Watt Compact Fluorescent 2-Lamp Fixture	26	0.026	96	1	Re-Lamp with (2) 10 Watt LED A19	20	0.020	74
RACCOON CREEK PARK	FAMILY CABIN 9	11-59	INTERIOR		RESTROOM	1	13 Watt Compact Fluorescent 3-Lamp Fixture	39	0.039	144	1	Re-Lamp with (3) 10 Watt LED A19	30	0.030	111
RACCOON CREEK PARK	FAMILY CABIN 9	11-59	INTERIOR		SHOWER	1	13 Watt Compact Fluorescent Downlight	13	0.013	48	1	Re-Lamp with (1) 10 Watt LED BR30	10	0.010	37
RACCOON CREEK PARK	FAMILY CABIN 9	11-59	INTERIOR		SHOWER	1	13 Watt Compact Fluorescent Fixture	13	0.013	48	1	Re-Lamp with (1) 10 Watt LED A19	10	0.010	37
RACCOON CREEK PARK	FAMILY CABIN 9	11-59	INTERIOR		TABLE LAMPS	4	13 Watt Compact Fluorescent Fixture	13	0.052	193	4	Re-Lamp with (1) 10 Watt LED A19	10	0.040	148
RACCOON CREEK PARK	FAMILY CABIN 9	11-59	EXTERIOR		PORCH	2	23 Watt Compact Fluorescent 2-Lamp Fixture	46	0.092	403	2	Re-Lamp with (2) 10 Watt LED A19	20	0.040	175
RACCOON CREEK PARK	FAMILY CABIN 5	11-55	INTERIOR		KITCHEN	1	23 Watt Compact Fluorescent Fixture	23	0.023	85	1	Re-Lamp with (1) 10 Watt LED A19	10	0.010	37
RACCOON CREEK PARK	FAMILY CABIN 5	11-55	INTERIOR		KITCHEN	1	13 Watt Compact Fluorescent 3-Lamp Fixture	39	0.039	144	1	Re-Lamp with (3) 10 Watt LED A19	30	0.030	111
RACCOON CREEK PARK	FAMILY CABIN 5	11-55	INTERIOR		SINK	1	1-Lamp F15 Undercabinet; No Retrofit	15	0.015	56	1	No Retrofit	15	0.015	56
RACCOON CREEK PARK	FAMILY CABIN 5	11-55	INTERIOR		HALLWAY	1	13 Watt Compact Fluorescent 2-Lamp Fixture	26	0.026	96	1	Re-Lamp with (2) 10 Watt LED A19	20	0.020	74
RACCOON CREEK PARK	FAMILY CABIN 5	11-55	INTERIOR		BEDROOM	1	13 Watt Compact Fluorescent 2-Lamp Fixture	26	0.026	96	1	Re-Lamp with (2) 10 Watt LED A19	20	0.020	74
RACCOON CREEK PARK	FAMILY CABIN 5	11-55	INTERIOR		BEDROOM	1	13 Watt Compact Fluorescent 2-Lamp Fixture	26	0.026	96	1	Re-Lamp with (2) 10 Watt LED A19	20	0.020	74
RACCOON CREEK PARK	FAMILY CABIN 5	11-55	INTERIOR		RESTROOM	1	13 Watt Compact Fluorescent 3-Lamp Fixture	39	0.039	144	1	Re-Lamp with (3) 10 Watt LED A19	30	0.030	111
RACCOON CREEK PARK	FAMILY CABIN 5	11-55	INTERIOR		SHOWER	1	13 Watt Compact Fluorescent Downlight	13	0.013	48	1	Re-Lamp with (1) 10 Watt LED BR30	10	0.010	37
RACCOON CREEK PARK	FAMILY CABIN 5	11-55	INTERIOR		SHOWER	1	13 Watt Compact Fluorescent Fixture	13	0.013	48	1	Re-Lamp with (1) 10 Watt LED A19	10	0.010	37
RACCOON CREEK PARK	FAMILY CABIN 5	11-55	INTERIOR		TABLE LAMPS	4	13 Watt Compact Fluorescent Fixture	13	0.052	193	4	Re-Lamp with (1) 10 Watt LED A19	10	0.040	148
RACCOON CREEK PARK	FAMILY CABIN 5	11-55	INTERIOR		BEDROOM	1	13 Watt Compact Fluorescent 2-Lamp Fixture	26	0.026	96	1	Re-Lamp with (2) 10 Watt LED A19	20	0.020	74
RACCOON CREEK PARK	FAMILY CABIN 5	11-55	EXTERIOR		PORCH	2	23 Watt Compact Fluorescent 2-Lamp Fixture	46	0.092	403	2	Re-Lamp with (2) 10 Watt LED A19	20	0.040	175
RACCOON CREEK PARK	LODGE OGC1 UNIT 3 LODGE	11-30	INTERIOR		LODGE ROOM	2	23 Watt Compact Fluorescent Fixture	23	0.046	170	2	Re-Lamp with (1) 10 Watt LED A19	10	0.020	74
RACCOON CREEK PARK	LODGE OGC1 UNIT 3 LODGE	11-30	INTERIOR		LODGE ROOM	1	43 Watt Compact Fluorescent Fixture	43	0.043	159	1	Re-Lamp with (1) 18 Watt LED A21	18	0.018	67
RACCOON CREEK PARK	LODGE OGC1 UNIT 3 LODGE	11-30	INTERIOR		LODGE ROOM	1	13 Watt Compact Fluorescent 3-Lamp Fixture	39	0.039	144	1	Re-Lamp with (3) 10 Watt LED A19	30	0.030	111
RACCOON CREEK PARK	SHOWER HOUSE OGC1 UNIT 1	11-19	INTERIOR		WOMENS RESTROOM	2	T12 1x4 2-Lamp Wrap Fixture	72	0.144	533	2	Retrofit with (2) 12.5 Watt LED T8 4' Lamps; Direct Wire to Socket	25	0.050	185
RACCOON CREEK PARK	SHOWER HOUSE OGC1 UNIT 1	11-19	INTERIOR		WOMENS RESTROOM	1	T12 1x4 2-Lamp Vaportight Fixture	72	0.072	267	1	Retrofit with (2) 12.5 Watt LED T8 4' Lamps; Direct Wire to Socket	25	0.025	93
RACCOON CREEK PARK	SHOWER HOUSE OGC1 UNIT 1	11-19	INTERIOR		MENS RESTROOM	1	T12 1x4 2-Lamp Vaportight Fixture	72	0.072	267	1	Retrofit with (2) 12.5 Watt LED T8 4' Lamps; Direct Wire to Socket	25	0.025	93
RACCOON CREEK PARK	SHOWER HOUSE OGC1 UNIT 1	11-19	INTERIOR		MENS RESTROOM	2	T12 1x4 2-Lamp Wrap Fixture	72	0.144	533	2	Retrofit with (2) 12.5 Watt LED T8 4' Lamps; Direct Wire to Socket	25	0.050	185

©2013 Energy Systems Group, LLC

EXISTING FIXTURES												PROPOSED FIXTURE UPGRADE				
Park/Building Name	Building	Building #	Phase	Floor	Room Description	Qty	Description	Watts	kW	kWh	Qty	Description	Watts	kW	kWh
RACCOON CREEK PARK	PARK OFFICE	1-4	INTERIOR		LOBBY	16	T8 1x4 4-Lamp Direct/Indirect Fixture with 28 Watt Lamps	95	1.520	3,417	16	Retrofit with (4) 12.5 Watt LED T8 4' Lamps; Direct Wire to Socket	50	0.800	1,798
RACCOON CREEK PARK	PARK OFFICE	1-4	INTERIOR		LOBBY	2	Existing LED Fixture; No Retrofit	10	0.020	45	2	No Retrofit	10	0.020	45
RACCOON CREEK PARK	PARK OFFICE	1-4	INTERIOR		VESTIBULE	1	Existing LED Fixture; No Retrofit	10	0.010	22	1	No Retrofit	10	0.010	22
RACCOON CREEK PARK	PARK OFFICE	1-4	INTERIOR		RESTROOM LOBBY	2	Existing LED Fixture; No Retrofit	10	0.020	45	2	No Retrofit	10	0.020	45
RACCOON CREEK PARK	PARK OFFICE	1-4	INTERIOR		WOMENS RESTROOM	1	Existing LED Fixture; No Retrofit	10	0.010	5	1	No Retrofit	10	0.010	5
RACCOON CREEK PARK	PARK OFFICE	1-4	INTERIOR		WOMENS RESTROOM	1	T12 2x2 2-Lamp Vanity Fixture	42	0.042	22	1	Retrofit with (2) 10 Watt LED T8 2' Lamps; Direct Wire to Socket	20	0.020	10
RACCOON CREEK PARK	PARK OFFICE	1-4	INTERIOR		MENS RESTROOM	1	T12 2x2 2-Lamp Vanity Fixture	42	0.042	22	1	Retrofit with (2) 10 Watt LED T8 2' Lamps; Direct Wire to Socket	20	0.020	10
RACCOON CREEK PARK	PARK OFFICE	1-4	INTERIOR		MENS RESTROOM	1	Existing LED Fixture; No Retrofit	10	0.010	5	1	No Retrofit	10	0.010	5
RACCOON CREEK PARK	PARK OFFICE	1-4	INTERIOR		BREAK ROOM	6	Existing LED Fixture; No Retrofit	40	0.240	540	6	No Retrofit	40	0.240	540
RACCOON CREEK PARK	PARK OFFICE	1-4	INTERIOR		BREAK ROOM	1	Existing LED Fixture; No Retrofit	10	0.010	22	1	No Retrofit	10	0.010	22
RACCOON CREEK PARK	PARK OFFICE	1-4	INTERIOR		BREAK ROOM	16	50 Watt Incandescent MR16 Fixture	50	0.800	1,798	16	Re-Lamp with (1) 7 Watt LED MR16	7	0.112	252
RACCOON CREEK PARK	PARK OFFICE	1-4	INTERIOR		OFFICE	4	Existing LED Fixture; No Retrofit	40	0.160	360	4	No Retrofit	40	0.160	360
RACCOON CREEK PARK	PARK OFFICE	1-4	INTERIOR		OFFICE	3	26 Watt Plug-In CFL Track Fixture	29	0.087	196	3	No Retrofit	29	0.087	196
RACCOON CREEK PARK	PARK OFFICE	1-4	INTERIOR		HALLWAY	2	T8 1x4 2-Lamp Troffer Fixture with 28 Watt Lamps	48	0.096	216	2	Retrofit with (2) 12.5 Watt LED T8 4' Lamps; Direct Wire to Socket	25	0.050	112
RACCOON CREEK PARK	PARK OFFICE	1-4	INTERIOR		COPY ROOM	2	T12 1x4 3-Lamp Troffer Fixture	126	0.252	566	2	Retrofit with (3) 12.5 Watt LED T8 4' Lamps; Direct Wire to Socket	37.5	0.075	169
RACCOON CREEK PARK	PARK OFFICE	1-4	INTERIOR		OFFICE	6	T12 1x4 3-Lamp Troffer Fixture	126	0.756	1,699	6	Retrofit with (3) 12.5 Watt LED T8 4' Lamps; Direct Wire to Socket	37.5	0.225	506
RACCOON CREEK PARK	PARK OFFICE	1-4	INTERIOR		OFFICE	2	T12 1x4 3-Lamp Troffer Fixture	126	0.252	566	2	Retrofit with (3) 12.5 Watt LED T8 4' Lamps; Direct Wire to Socket	37.5	0.075	169
RACCOON CREEK PARK	PARK OFFICE	1-4	INTERIOR		FILE ROOM	2	T12 1x4 3-Lamp Troffer Fixture	126	0.252	566	2	Retrofit with (3) 12.5 Watt LED T8 4' Lamps; Direct Wire to Socket	37.5	0.075	169
RACCOON CREEK PARK	PARK OFFICE	1-4	INTERIOR		WOMENS RESTROOM	1	Existing LED Fixture; No Retrofit	10	0.010	5	1	No Retrofit	10	0.010	5
RACCOON CREEK PARK	PARK OFFICE	1-4	INTERIOR		WOMENS RESTROOM	1	13 Watt Compact Fluorescent 4-Lamp Fixture	52	0.052	27	1	Re-Lamp with (4) 10 Watt LED A19	40	0.040	21
RACCOON CREEK PARK	PARK OFFICE	1-4	INTERIOR		WOMENS LOCKER ROOM	1	T12 1x4 3-Lamp Troffer Fixture	126	0.126	66	1	Retrofit with (3) 12.5 Watt LED T8 4' Lamps; Direct Wire to Socket	37.5	0.038	20
RACCOON CREEK PARK	PARK OFFICE	1-4	INTERIOR		WOMENS LOCKER SHOWER	1	13 Watt Plug-In CFL Downlight Fixture	13	0.013	7	1	No Retrofit	13	0.013	7
RACCOON CREEK PARK	PARK OFFICE	1-4	INTERIOR		MENS LOCKER ROOM	1	13 Watt Plug-In CFL Downlight Fixture	13	0.013	7	1	No Retrofit	13	0.013	7
RACCOON CREEK PARK	PARK OFFICE	1-4	INTERIOR		MENS LOCKER ROOM SHOWER	1	T12 1x4 3-Lamp Troffer Fixture	126	0.126	66	1	Retrofit with (3) 12.5 Watt LED T8 4' Lamps; Direct Wire to Socket	37.5	0.038	20
RACCOON CREEK PARK	PARK OFFICE	1-4	INTERIOR		MENS RESTROOM	1	T12 2x2 2-Lamp Vanity Fixture	42	0.042	22	1	Retrofit with (2) 10 Watt LED T8 2' Lamps; Direct Wire to Socket	20	0.020	10
RACCOON CREEK PARK	PARK OFFICE	1-4	INTERIOR		MENS RESTROOM	1	Existing LED Fixture; No Retrofit	10	0.010	5	1	No Retrofit	10	0.010	5

©2013 Energy Systems Group, LLC

EXISTING FIXTURES												PROPOSED FIXTURE UPGRADE				
Park/Building Name	Building	Building #	Phase	Floor	Room Description	Qty	Description	Watts	kW	kWh	Qty	Description	Watts	kW	kWh
RACCOON CREEK PARK	PARK OFFICE	1-4	INTERIOR		STORAGE/MECH	2	T12 1x4 2-Lamp Wrap Fixture	72	0.144	144	2	Retrofit with (2) 12.5 Watt LED T8 4' Lamps; Direct Wire to Socket	25	0.050	50
RACCOON CREEK PARK	PARK OFFICE	1-4	INTERIOR		JANITOR	1	T12 1x4 2-Lamp Fixture	72	0.072	72	1	Retrofit with (2) 12.5 Watt LED T8 4' Lamps; Direct Wire to Socket	25	0.025	25
RACCOON CREEK PARK	PARK OFFICE	1-4	INTERIOR		FILE ROOM	1	T12 1x4 2-Lamp Wrap Fixture	72	0.072	162	1	Retrofit with (2) 12.5 Watt LED T8 4' Lamps; Direct Wire to Socket	25	0.025	56
RACCOON CREEK PARK	PARK OFFICE	1-4	INTERIOR		HALLWAY	3	T12 1x4 2-Lamp Fixture	72	0.216	486	3	Retrofit with (2) 12.5 Watt LED T8 4' Lamps; Direct Wire to Socket	25	0.075	169
RACCOON CREEK PARK	PARK OFFICE	1-4	EXTERIOR		EXTERIOR	8	Existing LED Fixture; No Retrofit	10	0.080	350	8	No Retrofit	10	0.080	350
RACCOON CREEK PARK	PARK OFFICE	1-4	EXTERIOR		EXTERIOR FLAG	1	Existing LED Fixture; No Retrofit	20	0.020	88	1	No Retrofit	20	0.020	88
RACCOON CREEK PARK	STAFF OGC2	12-1	INTERIOR		STAFF	1	23 Watt Compact Fluorescent Fixture	23	0.023	52	1	Re-Lamp with (1) 10 Watt LED A19	10	0.010	22
RACCOON CREEK PARK	STAFF OGC2	12-1	INTERIOR		STAFF	3	13 Watt Compact Fluorescent Fixture	13	0.039	88	3	Re-Lamp with (1) 10 Watt LED A19	10	0.030	67
RACCOON CREEK PARK	LODGE OGC3	13-20	INTERIOR		CABIN	4	23 Watt Compact Fluorescent Fixture	23	0.092	207	4	Re-Lamp with (1) 10 Watt LED A19	10	0.040	90
RACCOON CREEK PARK	STAFF QUARTERS OGC3	13-5	INTERIOR		CABIN	2	23 Watt Compact Fluorescent Fixture	23	0.046	103	2	Re-Lamp with (1) 10 Watt LED A19	10	0.020	45
RACCOON CREEK PARK	STAFF QUARTERS OGC3	13-5	INTERIOR		CABIN	1	13 Watt Compact Fluorescent Fixture	13	0.013	29	1	Re-Lamp with (1) 10 Watt LED A19	10	0.010	22
RACCOON CREEK PARK	STAFF QUARTERS OGC3	13-5	EXTERIOR		EXTERIOR	1	13 Watt Compact Fluorescent 2-Lamp Fixture	26	0.026	114	1	Re-Lamp with (2) 10 Watt LED A19	20	0.020	88
RACCOON CREEK PARK	MAINTENANCE EQUIPMENT STORAGE	2-9	INTERIOR		EQUIPMENT STORAGE	2	23 Watt Compact Fluorescent Fixture	23	0.046	46	2	Re-Lamp with (1) 10 Watt LED A19	10	0.020	20
RACCOON CREEK PARK	MAINTENANCE EQUIPMENT STORAGE	2-9	INTERIOR		EQUIPMENT STORAGE	2	23 Watt Compact Fluorescent Fixture	23	0.046	46	2	Re-Lamp with (1) 10 Watt LED A19	10	0.020	20
RACCOON CREEK PARK	MAINTENANCE EQUIPMENT STORAGE	2-9	EXTERIOR		EQUIPMENT STORAGE	2	90 Watt Incandescent PAR38 2-Lamp Fixture	180	0.360	1,577	2	Re-Lamp with (2) 17 Watt LED PAR38	34	0.068	298
FORBES FOREST	POUND FIELD MAINTENANCE SHOP	1	INTERIOR		HALLWAY	2	T8 2x4 2-Lamp Surface Mount Fixture	62	0.124	258	2	Retrofit with (2) 12.5 Watt LED T8 4' Lamps; Direct Wire to Socket	25	0.050	104
FORBES FOREST	POUND FIELD MAINTENANCE SHOP	1	INTERIOR		HALLWAY	2	25 Watt Incandescent 2-Lamp Exit Sign	50	0.100	876	2	New 3 watt LED Exit Sign	3	0.006	53
FORBES FOREST	POUND FIELD MAINTENANCE SHOP	1	INTERIOR		OFFICE	2	T8 2x4 2-Lamp Surface Mount Fixture	62	0.124	258	2	Retrofit with (2) 12.5 Watt LED T8 4' Lamps; Direct Wire to Socket	25	0.050	104
FORBES FOREST	POUND FIELD MAINTENANCE SHOP	1	INTERIOR		OFFICE	2	T8 2x4 2-Lamp Surface Mount Fixture	62	0.124	258	2	Retrofit with (2) 12.5 Watt LED T8 4' Lamps; Direct Wire to Socket	25	0.050	104
FORBES FOREST	POUND FIELD MAINTENANCE SHOP	1	INTERIOR		OFFICE	2	T8 2x4 2-Lamp Surface Mount Fixture	62	0.124	258	2	Retrofit with (2) 12.5 Watt LED T8 4' Lamps; Direct Wire to Socket	25	0.050	104
FORBES FOREST	POUND FIELD MAINTENANCE SHOP	1	INTERIOR		ROGER CLAUSEN	2	T8 2x4 2-Lamp Surface Mount Fixture	62	0.124	258	2	Retrofit with (2) 12.5 Watt LED T8 4' Lamps; Direct Wire to Socket	25	0.050	104
FORBES FOREST	POUND FIELD MAINTENANCE SHOP	1	INTERIOR		HVAC ROOM	2	T8 1x4 2-Lamp Industrial Strip Fixture	62	0.124	124	2	Retrofit with (2) 12.5 Watt LED T8 4' Lamps; Direct Wire to Socket	25	0.050	50
FORBES FOREST	POUND FIELD MAINTENANCE SHOP	1	INTERIOR		OPEN AREA	7	T12 1x8 2-Lamp Industrial Strip Fixture with 60 Watt Lamps	123	0.861	1,791	7	Retrofit with (4) 12.5 Watt LED T8 4' Lamps and (1) x8 4-Lamp Industrial Strip Kit; Direct Wire to Socket	50	0.350	728
FORBES FOREST	POUND FIELD MAINTENANCE SHOP	1	INTERIOR		RESTROOM	2	T8 1x4 2-Lamp Troffer Fixture	62	0.124	65	2	Retrofit with (2) 12.5 Watt LED T8 4' Lamps; Direct Wire to Socket	25	0.050	26
FORBES FOREST	POUND FIELD MAINTENANCE SHOP	1	INTERIOR		RESTROOM	1	T12 1x4 2-Lamp Vanity Fixture	72	0.072	38	1	Retrofit with (2) 12.5 Watt LED T8 4' Lamps; Direct Wire to Socket	25	0.025	13
FORBES FOREST	POUND FIELD MAINTENANCE SHOP	1	INTERIOR		RESTROOM	1	25 Watt Incandescent 2-Lamp Exit Sign	50	0.050	438	1	New 3 watt LED Exit Sign	3	0.003	26

©2013 Energy Systems Group, LLC

EXISTING FIXTURES											PROPOSED FIXTURE UPGRADE				
Park/Building Name	Building	Building #	Phase	Floor	Room Description	Qty	Description	Watts	kW	kWh	Qty	Description	Watts	kW	kWh
FORBES FOREST	POUND FIELD MAINTENANCE SHOP	1	INTERIOR		SHOP	13	T12 1x8 2-Lamp Industrial Strip Fixture with 60 Watt Lamps	123	1.599	3,326	13	Retrofit with (4) 12.5 Watt LED T8 4' Lamps and (1) 1x8 4-Lamp Industrial Strip Kit; Direct Wire to Socket	50	0.650	1,352
FORBES FOREST	POUND FIELD MAINTENANCE SHOP	1	INTERIOR		LIFT ROOM	8	T12 1x8 2-Lamp Industrial Strip Fixture with 60 Watt Lamps	123	0.984	2,047	8	Retrofit with (4) 12.5 Watt LED T8 4' Lamps and (1) 1x8 4-Lamp Industrial Strip Kit; Direct Wire to Socket	50	0.400	832
FORBES FOREST	POUND FIELD MAINTENANCE SHOP	1	INTERIOR		LIFT ROOM	1	25 Watt Incandescent 2-Lamp Exit Sign	50	0.050	438	1	New 3 watt LED Exit Sign	3	0.003	26
FORBES FOREST	POUND FIELD MAINTENANCE SHOP	1	INTERIOR		LIFT ROOM	2	Incandescent Exit Sign; Combo Emergency Heads	50	0.100	876	2	New 3 watt LED Exit Sign with Emergency Combo Heads	3	0.006	53
FORBES FOREST	POUND FIELD MAINTENANCE SHOP	1	EXTERIOR		EXTERIOR	1	50 Watt Metal Halide Wall Pack Fixture	72	0.072	315	1	New 24 Watt LED Wall Pack Fixture; Non-Dark Sky	25	0.025	110
FORBES FOREST	POUND FIELD MAINTENANCE SHOP	1	INTERIOR		INTERIOR	7	Incandescent Exit Sign; Combo Emergency Heads	50	0.350	3,066	7	New 3 watt LED Exit Sign with Emergency Combo Heads	3	0.021	184
FORBES FOREST	POUND FIELD MAINTENANCE SHOP	1	EXTERIOR		EXTERIOR	2	250 Watt Metal Halide Flood Fixture	295	0.590	2,584	2	New 125 Watt LED Flood Fixture	133	0.266	1,165
FORBES FOREST	POUND FIELD MAINTENANCE SHOP	1	EXTERIOR		CANOPY	2	250 Watt Metal Halide Canopy Fixture	295	0.590	2,584	2	New 52 Watt LED Canopy Fixture	51	0.102	447
FORBES FOREST	POLE BARN 1	1	INTERIOR		OFFICE	4	T12 1x8 2-Lamp Strip Fixture with 60 Watt Lamps	123	0.492	1,023	4	Retrofit with (4) 12.5 Watt LED T8 4' Lamps and (1) 1x8 4-Lamp Strip Kit; Direct Wire to Socket	50	0.200	416
FORBES FOREST	POLE BARN 1	1	INTERIOR		OFFICE	2	T12 1x4 2-Lamp Wrap Fixture	72	0.144	300	2	Retrofit with (2) 12.5 Watt LED T8 4' Lamps; Direct Wire to Socket	25	0.050	104
FORBES FOREST	POLE BARN 1	1	INTERIOR		OFFICE	1	Incandescent Exit Sign; Combo Emergency Heads	50	0.050	438	1	New 3 watt LED Exit Sign with Emergency Combo Heads	3	0.003	26
FORBES FOREST	POLE BARN 1	1	EXTERIOR		EXTERIOR	1	250 Watt High Pressure Sodium Dusk to Dawn Fixture	300	0.300	1,314	1	New 26 Watt LED Dusk to Dawn Barnyard Fixture	26	0.026	114
FORBES FOREST	POLE BARN 1	1	INTERIOR		EXTERIOR	1	Incandescent Exit Sign; Combo Emergency Heads	50	0.050	438	1	New 3 watt LED Exit Sign with Emergency Combo Heads	3	0.003	26
FORBES FOREST	POLE BARN 2	1	INTERIOR		POLE BARN 2	4	Existing LED Fixture; No Retrofit	10	0.040	130	4	No Retrofit	10	0.040	130
FORBES FOREST	FIRE CABIN	1	INTERIOR		FIRE CABIN	2	100 Watt Incandescent A-Lamp Fixture	100	0.200	652	2	Re-Lamp with (1) 18 Watt LED A21	18	0.036	117
FORBES FOREST	LICKHOLLOW	2	INTERIOR		OFFICE	1	T12 1x4 2-Lamp Fixture	72	0.072	150	1	Retrofit with (2) 12.5 Watt LED T8 4' Lamps; Direct Wire to Socket	25	0.025	52
FORBES FOREST	LICKHOLLOW	2	INTERIOR		SHOP	4	T12 1x8 2-Lamp Strip Fixture with 60 Watt Lamps	123	0.492	1,023	4	Retrofit with (4) 12.5 Watt LED T8 4' Lamps and (1) 1x8 4-Lamp Strip Kit; Direct Wire to Socket	50	0.200	416
FORBES FOREST	LICKHOLLOW	2	INTERIOR		SHOP	1	T8 1x4 2-Lamp Strip Fixture	62	0.062	129	1	Retrofit with (2) 12.5 Watt LED T8 4' Lamps; Direct Wire to Socket	25	0.025	52
FORBES FOREST	LICKHOLLOW	2	INTERIOR		SHOP	1	100 Watt Incandescent A-Lamp Fixture	100	0.100	208	1	Re-Lamp with (1) 18 Watt LED A21	18	0.018	37
FORBES FOREST	LICKHOLLOW	2	EXTERIOR		EXTERIOR	1	250 Watt High Pressure Sodium Dusk to Dawn Fixture	300	0.300	1,314	1	New 26 Watt LED Dusk to Dawn Barnyard Fixture	26	0.026	114
FORBES FOREST	HELIPORT	3	INTERIOR		SHOP	1	100 Watt Incandescent A-Lamp Fixture	100	0.100	208	1	Re-Lamp with (1) 18 Watt LED A21	18	0.018	37
FORBES FOREST	HELIPORT	3	INTERIOR		OPEN AREA	4	T12 1x4 2-Lamp Wrap Fixture	72	0.288	599	4	Retrofit with (2) 12.5 Watt LED T8 4' Lamps; Direct Wire to Socket	25	0.100	208
FORBES FOREST	HELIPORT	3	INTERIOR		KITCHEN	2	100 Watt Incandescent A-Lamp Fixture	100	0.200	416	2	Re-Lamp with (1) 18 Watt LED A21	18	0.036	75
FORBES FOREST	HELIPORT	3	INTERIOR		BATHROOM	1	100 Watt Incandescent A-Lamp Fixture	100	0.100	52	1	Re-Lamp with (1) 18 Watt LED A21	18	0.018	9
FORBES FOREST	HELIPORT	3	INTERIOR		BATHROOM	5	100 Watt Incandescent A-Lamp Fixture	100	0.500	1,040	5	Re-Lamp with (1) 18 Watt LED A21	18	0.090	187
FORBES FOREST	HELIPORT	3	INTERIOR		TOWERS	2	100 Watt Incandescent A-Lamp Fixture	100	0.200	416	2	Re-Lamp with (1) 18 Watt LED A21	18	0.036	75

©2013 Energy Systems Group, LLC

EXISTING FIXTURES											PROPOSED FIXTURE UPGRADE				
Park/Building Name	Building	Building #	Phase	Floor	Room Description	Qty	Description	Watts	kW	kWh	Qty	Description	Watts	kW	kWh
JENNINGS ENVIRONMENTAL CENTER			INTERIOR		STORAGE	1	T12 1x4 2-Lamp Strip Fixture	72	0.072	72	1	Retrofit with (2) 12.5 Watt LED T8 4' Lamps; Direct Wire to Socket	25	0.025	25
JENNINGS ENVIRONMENTAL CENTER			INTERIOR		WOMENS RESTROOM	4	Existing LED Fixture; No Retrofit	10	0.040	88	4	No Retrofit	10	0.040	88
JENNINGS ENVIRONMENTAL CENTER			INTERIOR		STORAGE	1	T12 1x4 2-Lamp Strip Fixture	72	0.072	72	1	Retrofit with (2) 12.5 Watt LED T8 4' Lamps; Direct Wire to Socket	25	0.025	25
JENNINGS ENVIRONMENTAL CENTER			INTERIOR		MENS RESTROOM	1	Existing LED Fixture; No Retrofit	10	0.010	22	1	No Retrofit	10	0.010	22
JENNINGS ENVIRONMENTAL CENTER			INTERIOR		STORAGE	1	T12 1x4 2-Lamp Wrap Fixture	72	0.072	72	1	Retrofit with (2) 12.5 Watt LED T8 4' Lamps; Direct Wire to Socket	25	0.025	25
JENNINGS ENVIRONMENTAL CENTER			INTERIOR		OPEN CLASSROOM	6	T12 2x2 2-Lamp U-Lamp Troffer Fixture with 6" Lamps	72	0.432	955	6	Retrofit with (2) 10 Watt LED T8 2' Lamps and (1) 2x2 2-Lamp White Reflector Kit; Direct Wire to Socket	20	0.120	265
JENNINGS ENVIRONMENTAL CENTER			INTERIOR		OPEN CLASSROOM	17	T12 2x4 4-Lamp Troffer Fixture	144	2.448	5,410	17	Retrofit with (4) 12.5 Watt LED T8 4' Lamps; Direct Wire to Socket	50	0.850	1,879
JENNINGS ENVIRONMENTAL CENTER			INTERIOR		OPEN CLASSROOM	6	65 Watt Incandescent R30 Fixture	65	0.390	862	6	Re-Lamp with (1) 10 Watt LED BR30	10	0.060	133
JENNINGS ENVIRONMENTAL CENTER			INTERIOR		OPEN CLASSROOM	9	50 Watt Incandescent MR16 Fixture	50	0.450	995	9	Re-Lamp with (1) 7 Watt LED MR16	7	0.063	139
JENNINGS ENVIRONMENTAL CENTER			INTERIOR		OPEN CLASSROOM	23	65 Watt Incandescent R30 Fixture	65	1.495	3,304	23	Re-Lamp with (1) 10 Watt LED BR30	10	0.230	508
JENNINGS ENVIRONMENTAL CENTER			INTERIOR		BACK HOUSE	2	T12 1x4 2-Lamp Wrap Fixture	72	0.144	318	2	Retrofit with (2) 12.5 Watt LED T8 4' Lamps; Direct Wire to Socket	25	0.050	111
JENNINGS ENVIRONMENTAL CENTER			INTERIOR		BACK HOUSE	6	Incandescent Exit Sign; Green	50	0.300	2,628	6	New 3 watt LED Exit Sign	3	0.018	158
JENNINGS ENVIRONMENTAL CENTER			INTERIOR		BACK HOUSE	6	Incandescent Exit Sign; Combo Emergency Heads	50	0.300	2,628	6	New 3 watt LED Exit Sign with Emergency Combo Heads	3	0.018	158
JENNINGS ENVIRONMENTAL CENTER			INTERIOR		ENTRANCE	11	T12 2x2 2-Lamp U-Lamp Troffer Fixture with 6" Lamps	72	0.792	1,750	11	Retrofit with (2) 10 Watt LED T8 2' Lamps and (1) 2x2 2-Lamp White Reflector Kit; Direct Wire to Socket	20	0.220	486
JENNINGS ENVIRONMENTAL CENTER			INTERIOR		OFFICE	2	T12 2x4 4-Lamp Troffer Fixture	144	0.288	636	2	Retrofit with (4) 12.5 Watt LED T8 4' Lamps; Direct Wire to Socket	50	0.100	221
JENNINGS ENVIRONMENTAL CENTER			INTERIOR		UNDER CABINET	3	T12 2x2 1-Lamp Troffer Fixture	32	0.096	212	3	Retrofit with (1) 10 Watt LED T8 2' Lamp; Direct Wire to Socket	10	0.030	66
JENNINGS ENVIRONMENTAL CENTER			INTERIOR		CONFERENCE	4	T12 2x4 4-Lamp Troffer Fixture	144	0.576	1,273	4	Retrofit with (4) 12.5 Watt LED T8 4' Lamps; Direct Wire to Socket	50	0.200	442
JENNINGS ENVIRONMENTAL CENTER			INTERIOR		OFFICE	2	T12 2x4 4-Lamp Troffer Fixture	144	0.288	636	2	Retrofit with (4) 12.5 Watt LED T8 4' Lamps; Direct Wire to Socket	50	0.100	221
JENNINGS ENVIRONMENTAL CENTER			INTERIOR		EQUIPMENT ROOM	2	T12 2x4 4-Lamp Troffer Fixture	144	0.288	288	2	Retrofit with (4) 12.5 Watt LED T8 4' Lamps; Direct Wire to Socket	50	0.100	100
JENNINGS ENVIRONMENTAL CENTER			INTERIOR		WILL TAYLOR	2	T12 2x4 4-Lamp Troffer Fixture	144	0.288	636	2	Retrofit with (4) 12.5 Watt LED T8 4' Lamps; Direct Wire to Socket	50	0.100	221
JENNINGS ENVIRONMENTAL CENTER			INTERIOR		FRONT DESK	4	T12 2x4 4-Lamp Troffer Fixture	144	0.576	1,273	4	Retrofit with (4) 12.5 Watt LED T8 4' Lamps; Direct Wire to Socket	50	0.200	442
JENNINGS ENVIRONMENTAL CENTER			INTERIOR		HALLWAY	4	T12 1x4 2-Lamp Wrap Fixture	72	0.288	636	4	Retrofit with (2) 12.5 Watt LED T8 4' Lamps; Direct Wire to Socket	25	0.100	221
JENNINGS ENVIRONMENTAL CENTER			INTERIOR		HALLWAY	2	18 Watt Compact Fluorescent Downlight Fixture	18	0.036	80	2	Re-Lamp with (1) 10 Watt LED BR30	10	0.020	44
JENNINGS ENVIRONMENTAL CENTER			INTERIOR		HALLWAY	5	T12 2x2 2-Lamp U-Lamp Troffer Fixture with 6" Lamps	72	0.360	796	5	Retrofit with (2) 10 Watt LED T8 2' Lamps and (1) 2x2 2-Lamp White Reflector Kit; Direct Wire to Socket	20	0.100	221
JENNINGS ENVIRONMENTAL CENTER			INTERIOR		HALLWAY	4	Incandescent Exit Sign; Combo Emergency Heads	50	0.200	1,752	4	New 3 watt LED Exit Sign with Emergency Combo Heads	3	0.012	105
JENNINGS ENVIRONMENTAL CENTER			INTERIOR		HALLWAY	2	25 Watt Incandescent 2-Lamp Exit Sign	50	0.100	876	2	New 3 watt LED Exit Sign	3	0.006	53

©2013 Energy Systems Group, LLC

EXISTING FIXTURES											PROPOSED FIXTURE UPGRADE				
Park/Building Name	Building	Building #	Phase	Floor	Room Description	Qty	Description	Watts	kW	kWh	Qty	Description	Watts	kW	kWh
JENNINGS ENVIRONMENTAL CENTER			INTERIOR		BASEMENT CLOSET	1	T12 2x3 1-Lamp Troffer Fixture	47	0.047	47	1	Retrofit with (1) 12 Watt LED T8 3' Lamp; Direct Wire to Socket	12	0.012	12
JENNINGS ENVIRONMENTAL CENTER			INTERIOR		BASEMENT	13	T12 1x4 2-Lamp Wrap Fixture	72	0.936	2,069	13	Retrofit with (2) 12.5 Watt LED T8 4' Lamps; Direct Wire to Socket	25	0.325	718
JENNINGS ENVIRONMENTAL CENTER			INTERIOR		KITCHEN	1	T12 2x4 4-Lamp Troffer Fixture	144	0.144	318	1	Retrofit with (4) 12.5 Watt LED T8 4' Lamps; Direct Wire to Socket	50	0.050	111
JENNINGS ENVIRONMENTAL CENTER			INTERIOR		BATHROOM	1	60 Watt Incandescent 4-Lamp Globe Fixture	240	0.240	125	1	Re-Lamp with (4) 8 Watt LED G25 Globe	32	0.032	17
JENNINGS ENVIRONMENTAL CENTER			INTERIOR		BATHROOM	1	T12 2x4 2-Lamp Surface Mount Fixture	78	0.078	41	1	Retrofit with (2) 12.5 Watt LED T8 4' Lamps; Direct Wire to Socket	25	0.025	13
JENNINGS ENVIRONMENTAL CENTER			EXTERIOR		OUTDOOR LIGHT	7	50 Watt Metal Halide Bollard Fixture	72	0.504	2,208	7	New 12 Watt LED Bollard Fixture	12	0.084	368
JENNINGS ENVIRONMENTAL CENTER			EXTERIOR		DOWNLIGHTS	14	50 Watt Metal Halide Downlight Fixture	72	1.008	4,415	14	Retrofit with 9 Watt LED 6" Downlight	9	0.126	552
JENNINGS ENVIRONMENTAL CENTER			INTERIOR		EMERGENCY LIGHT	6	Incandescent Exit Sign; Combo Emergency Heads	50	0.300	2,628	6	New 3 watt LED Exit Sign with Emergency Combo Heads	3	0.018	158
JENNINGS ENVIRONMENTAL CENTER			INTERIOR		STORAGE GARAGE	1	T12 1x4 2-Lamp Wrap Fixture	72	0.072	72	1	Retrofit with (2) 12.5 Watt LED T8 4' Lamps; Direct Wire to Socket	25	0.025	25
JENNINGS ENVIRONMENTAL CENTER			INTERIOR		STORAGE GARAGE	13	T12 1x4 2-Lamp Industrial Strip Fixture	72	0.936	936	13	Retrofit with (2) 12.5 Watt LED T8 4' Lamps; Direct Wire to Socket	25	0.325	325
JENNINGS ENVIRONMENTAL CENTER			EXTERIOR		EXTERIOR	1	75 Watt Incandescent PAR30 Fixture	75	0.075	329	1	Re-Lamp with (1) 10 Watt LED PAR30	10	0.010	44
JENNINGS ENVIRONMENTAL CENTER			INTERIOR		NEW STORAGE	3	100 Watt Incandescent A-Lamp Fixture	100	0.300	300	3	Re-Lamp with (1) 18 Watt LED A21	18	0.054	54
KEYSTONE STATE PARK	MORINE		INTERIOR		BATHROOM	1	32 Watt Plug-In CFL 12" Downlight Fixture	35	0.035	97	1	No Retrofit	35	0.035	97
KEYSTONE STATE PARK	MORINE		INTERIOR		MENS RESTROOM	2	T8 1x4 2-Lamp Wrap Fixture	62	0.124	342	2	Retrofit with (2) 12.5 Watt LED T8 4' Lamps; Direct Wire to Socket	25	0.050	138
KEYSTONE STATE PARK	MORINE		INTERIOR		WOMENS RESTROOM	2	T8 1x4 2-Lamp Wrap Fixture	62	0.124	342	2	Retrofit with (2) 12.5 Watt LED T8 4' Lamps; Direct Wire to Socket	25	0.050	138
KEYSTONE STATE PARK	MORINE		INTERIOR		JANITOR	1	T8 1x4 2-Lamp Industrial Strip Fixture	62	0.062	62	1	Retrofit with (2) 12.5 Watt LED T8 4' Lamps; Direct Wire to Socket	25	0.025	25
KEYSTONE STATE PARK	MORINE		EXTERIOR		EXTERIOR	1	175 Watt Metal Halide Wall Pack Fixture	213	0.213	307	1	New 37 Watt LED Wall Pack Fixture; Non-Dark Sky	39	0.039	56
KEYSTONE STATE PARK	MORINE		EXTERIOR		EXTERIOR	1	175 Watt Metal Halide Wall Pack Fixture	213	0.213	307	1	New 37 Watt LED Wall Pack Fixture; Non-Dark Sky	39	0.039	56
KEYSTONE STATE PARK	WATER TREATMENT		INTERIOR		TREATMENT PLANT	4	T8 2x4 4-Lamp Troffer Fixture	106	0.424	1,170	4	Retrofit with (4) 12.5 Watt LED T8 4' Lamps; Direct Wire to Socket	50	0.200	552
KEYSTONE STATE PARK	WATER TREATMENT		EXTERIOR		EXTERIOR	1	50 Watt Metal Halide Wall Pack Fixture	72	0.072	315	1	New 24 Watt LED Wall Pack Fixture; Non-Dark Sky	25	0.025	110
KEYSTONE STATE PARK	CONTACT BUILDING		INTERIOR		CONTACT BUILDING	3	T12 1x4 4-Lamp Wrap Fixture	144	0.432	971	3	Retrofit with (4) 12.5 Watt LED T8 4' Lamps; Direct Wire to Socket	50	0.150	337
KEYSTONE STATE PARK	CONTACT BUILDING		INTERIOR		CONTACT BUILDING	1	T12 2x4 4-Lamp Troffer Fixture	144	0.144	324	1	Retrofit with (4) 12.5 Watt LED T8 4' Lamps; Direct Wire to Socket	50	0.050	112
KEYSTONE STATE PARK	CONTACT BUILDING		INTERIOR		CONTACT BUILDING	1	13 Watt Compact Fluorescent Fixture	13	0.013	29	1	Re-Lamp with (1) 10 Watt LED A19	10	0.010	22
KEYSTONE STATE PARK	CONTACT BUILDING		INTERIOR		BATHROOM	1	23 Watt Compact Fluorescent 2-Lamp Fixture	46	0.046	103	1	Re-Lamp with (2) 10 Watt LED A19	20	0.020	45
KEYSTONE STATE PARK	CONTACT BUILDING		EXTERIOR		EXTERIOR	1	50 Watt Metal Halide Wall Pack Fixture	72	0.072	315	1	New 24 Watt LED Wall Pack Fixture; Non-Dark Sky	25	0.025	110
KEYSTONE STATE PARK	HILLSIDE SHOWER HOUSE		INTERIOR		MENS RESTROOM	2	T8 1x4 3-Lamp Wrap Fixture; Difficult Access	84	0.168	770	2	Retrofit with (3) 12.5 Watt LED T8 4' Lamps; Direct Wire to Socket; Difficult Access	37.5	0.075	344

©2013 Energy Systems Group, LLC

EXISTING FIXTURES											PROPOSED FIXTURE UPGRADE				
Park/Building Name	Building	Building #	Phase	Floor	Room Description	Qty	Description	Watts	kW	kWh	Qty	Description	Watts	kW	kWh
KEYSTONE STATE PARK	HILLSIDE SHOWER HOUSE		INTERIOR		MENS RESTROOM	1	T8 1x4 2-Lamp Wrap Fixture	62	0.062	284	1	Retrofit with (2) 12.5 Watt LED T8 4' Lamps; Direct Wire to Socket	25	0.025	115
KEYSTONE STATE PARK	HILLSIDE SHOWER HOUSE		INTERIOR		WOMENS RESTROOM	2	T8 1x4 3-Lamp Wrap Fixture; Difficult Access	84	0.168	770	2	Retrofit with (3) 12.5 Watt LED T8 4' Lamps; Direct Wire to Socket; Difficult Access	37.5	0.075	344
KEYSTONE STATE PARK	HILLSIDE SHOWER HOUSE		INTERIOR		WOMENS RESTROOM	1	T8 1x4 2-Lamp Wrap Fixture	62	0.062	284	1	Retrofit with (2) 12.5 Watt LED T8 4' Lamps; Direct Wire to Socket	25	0.025	115
KEYSTONE STATE PARK	HILLSIDE SHOWER HOUSE		INTERIOR		FAMILY ASSISTANCE	1	T8 1x4 2-Lamp Wrap Fixture	62	0.062	284	1	Retrofit with (2) 12.5 Watt LED T8 4' Lamps; Direct Wire to Socket	25	0.025	115
KEYSTONE STATE PARK	HILLSIDE SHOWER HOUSE		EXTERIOR		EXTERIOR	5	T8 1x4 2-Lamp Wrap Fixture; Difficult Access	62	0.310	893	5	Retrofit with (2) 12.5 Watt LED T8 4' Lamps; Direct Wire to Socket; Difficult Access	25	0.125	360
KEYSTONE STATE PARK	HILLSIDE SHOWER HOUSE		EXTERIOR		EXTERIOR	6	100 Watt Metal Halide Wall Pack Fixture	125	0.750	2,160	6	New 24 Watt LED Wall Pack Fixture; Non-Dark Sky	25	0.150	432
KEYSTONE STATE PARK	1ST CABIN		INTERIOR		SINK	1	1-Lamp F13; No Retrofit	13	0.013	48	1	No Retrofit	13	0.013	48
KEYSTONE STATE PARK	1ST CABIN		INTERIOR		SINK	6	Decorative Specialty Fixture; No Retrofit	0	0.000	0	6	No Retrofit	0	0.000	0
KEYSTONE STATE PARK	1ST CABIN		INTERIOR		BATHROOM	1	60 Watt Incandescent A-Lamp Fixture	60	0.060	222	1	Re-Lamp with (1) 10 Watt LED A19	10	0.010	37
KEYSTONE STATE PARK	1ST CABIN		INTERIOR		SINK	2	13 Watt Compact Fluorescent 2-Lamp Fixture	26	0.052	193	2	Re-Lamp with (2) 10 Watt LED A19	20	0.040	148
KEYSTONE STATE PARK	1ST CABIN		EXTERIOR		PORCH	1	Existing LED Fixture; No Retrofit	10	0.010	44	1	No Retrofit	10	0.010	44
KEYSTONE STATE PARK	1ST CABIN		INTERIOR		BASEMENT	3	13 Watt Compact Fluorescent Fixture	13	0.039	144	3	Re-Lamp with (1) 10 Watt LED A19	10	0.030	111
KEYSTONE STATE PARK	CABIN	1	INTERIOR		DECORATIVE LIGHT	1	9 Watt Compact Fluorescent Fixture	9	0.009	33	1	Re-Lamp with (1) 7 Watt LED A19	7	0.007	26
KEYSTONE STATE PARK	CABIN	1	INTERIOR		FAN LIGHT	1	9 Watt Compact Fluorescent 4-Lamp Fixture	36	0.036	133	1	Re-Lamp with (4) 7 Watt LED A19	28	0.028	104
KEYSTONE STATE PARK	CABIN	1	INTERIOR		DECO LIGHT	2	9 Watt Compact Fluorescent 2-Lamp Fixture	18	0.036	133	2	Re-Lamp with (2) 7 Watt LED A19	14	0.028	104
KEYSTONE STATE PARK	CABIN	1	INTERIOR		FAN LIGHT	1	9 Watt Compact Fluorescent 3-Lamp Fixture	27	0.027	100	1	Re-Lamp with (3) 7 Watt LED A19	21	0.021	78
KEYSTONE STATE PARK	CABIN	1	INTERIOR		BATHROOM	1	13 Watt Compact Fluorescent 2-Lamp Fixture	26	0.026	96	1	Re-Lamp with (2) 10 Watt LED A19	20	0.020	74
KEYSTONE STATE PARK	CABIN	1	INTERIOR		FAN	1	13 Watt Compact Fluorescent Fixture	13	0.013	48	1	Re-Lamp with (1) 10 Watt LED A19	10	0.010	37
KEYSTONE STATE PARK	CABIN	1	INTERIOR		BASEMENT	3	13 Watt Compact Fluorescent Fixture	13	0.039	144	3	Re-Lamp with (1) 10 Watt LED A19	10	0.030	111
KEYSTONE STATE PARK	CABIN	1	INTERIOR		SINK	1	1-Lamp F13; No Retrofit	13	0.013	48	1	No Retrofit	13	0.013	48
KEYSTONE STATE PARK	CABIN	1	EXTERIOR		PORCH	1	Existing LED Fixture; No Retrofit	10	0.010	44	1	No Retrofit	10	0.010	44
KEYSTONE STATE PARK	CABIN	2	INTERIOR		DECORATIVE LIGHT	1	9 Watt Compact Fluorescent Fixture	9	0.009	33	1	Re-Lamp with (1) 7 Watt LED A19	7	0.007	26
KEYSTONE STATE PARK	CABIN	2	INTERIOR		FAN LIGHT	1	9 Watt Compact Fluorescent 4-Lamp Fixture	36	0.036	133	1	Re-Lamp with (4) 7 Watt LED A19	28	0.028	104
KEYSTONE STATE PARK	CABIN	2	INTERIOR		DECO LIGHT	2	9 Watt Compact Fluorescent 2-Lamp Fixture	18	0.036	133	2	Re-Lamp with (2) 7 Watt LED A19	14	0.028	104
KEYSTONE STATE PARK	CABIN	2	INTERIOR		FAN LIGHT	1	9 Watt Compact Fluorescent 3-Lamp Fixture	27	0.027	100	1	Re-Lamp with (3) 7 Watt LED A19	21	0.021	78
KEYSTONE STATE PARK	CABIN	2	INTERIOR		BATHROOM	1	13 Watt Compact Fluorescent 2-Lamp Fixture	26	0.026	96	1	Re-Lamp with (2) 10 Watt LED A19	20	0.020	74

©2013 Energy Systems Group, LLC

EXISTING FIXTURES												PROPOSED FIXTURE UPGRADE				
Park/Building Name	Building	Building #	Phase	Floor	Room Description	Qty	Description	Watts	kW	kWh	Qty	Description	Watts	kW	kWh
KEYSTONE STATE PARK	CABIN	2	INTERIOR		FAN	1	13 Watt Compact Fluorescent Fixture	13	0.013	48	1	Re-Lamp with (1) 10 Watt LED A19	10	0.010	37
KEYSTONE STATE PARK	CABIN	2	INTERIOR		BASEMENT	3	13 Watt Compact Fluorescent Fixture	13	0.039	144	3	Re-Lamp with (1) 10 Watt LED A19	10	0.030	111
KEYSTONE STATE PARK	CABIN	2	INTERIOR		SINK	1	1-Lamp F13; No Retrofit	13	0.013	48	1	No Retrofit	13	0.013	48
KEYSTONE STATE PARK	CABIN	2	EXTERIOR		PORCH	1	Existing LED Fixture; No Retrofit	10	0.010	44	1	No Retrofit	10	0.010	44
KEYSTONE STATE PARK	CABIN	3	INTERIOR		DECORATIVE LIGHT	1	9 Watt Compact Fluorescent Fixture	9	0.009	33	1	Re-Lamp with (1) 7 Watt LED A19	7	0.007	26
KEYSTONE STATE PARK	CABIN	3	INTERIOR		FAN LIGHT	1	9 Watt Compact Fluorescent 4-Lamp Fixture	36	0.036	133	1	Re-Lamp with (4) 7 Watt LED A19	28	0.028	104
KEYSTONE STATE PARK	CABIN	3	INTERIOR		DECO LIGHT	2	9 Watt Compact Fluorescent 2-Lamp Fixture	18	0.036	133	2	Re-Lamp with (2) 7 Watt LED A19	14	0.028	104
KEYSTONE STATE PARK	CABIN	3	INTERIOR		FAN LIGHT	1	9 Watt Compact Fluorescent 3-Lamp Fixture	27	0.027	100	1	Re-Lamp with (3) 7 Watt LED A19	21	0.021	78
KEYSTONE STATE PARK	CABIN	3	INTERIOR		BATHROOM	1	13 Watt Compact Fluorescent 2-Lamp Fixture	26	0.026	96	1	Re-Lamp with (2) 10 Watt LED A19	20	0.020	74
KEYSTONE STATE PARK	CABIN	3	INTERIOR		FAN	1	13 Watt Compact Fluorescent Fixture	13	0.013	48	1	Re-Lamp with (1) 10 Watt LED A19	10	0.010	37
KEYSTONE STATE PARK	CABIN	3	INTERIOR		BASEMENT	3	13 Watt Compact Fluorescent Fixture	13	0.039	144	3	Re-Lamp with (1) 10 Watt LED A19	10	0.030	111
KEYSTONE STATE PARK	CABIN	3	INTERIOR		SINK	1	1-Lamp F13; No Retrofit	13	0.013	48	1	No Retrofit	13	0.013	48
KEYSTONE STATE PARK	CABIN	3	EXTERIOR		PORCH	1	Existing LED Fixture; No Retrofit	10	0.010	44	1	No Retrofit	10	0.010	44
KEYSTONE STATE PARK	CABIN	4	INTERIOR		DECORATIVE LIGHT	1	9 Watt Compact Fluorescent Fixture	9	0.009	33	1	Re-Lamp with (1) 7 Watt LED A19	7	0.007	26
KEYSTONE STATE PARK	CABIN	4	INTERIOR		FAN LIGHT	1	9 Watt Compact Fluorescent 4-Lamp Fixture	36	0.036	133	1	Re-Lamp with (4) 7 Watt LED A19	28	0.028	104
KEYSTONE STATE PARK	CABIN	4	INTERIOR		DECO LIGHT	2	9 Watt Compact Fluorescent 2-Lamp Fixture	18	0.036	133	2	Re-Lamp with (2) 7 Watt LED A19	14	0.028	104
KEYSTONE STATE PARK	CABIN	4	INTERIOR		FAN LIGHT	1	9 Watt Compact Fluorescent 3-Lamp Fixture	27	0.027	100	1	Re-Lamp with (3) 7 Watt LED A19	21	0.021	78
KEYSTONE STATE PARK	CABIN	4	INTERIOR		BATHROOM	1	13 Watt Compact Fluorescent 2-Lamp Fixture	26	0.026	96	1	Re-Lamp with (2) 10 Watt LED A19	20	0.020	74
KEYSTONE STATE PARK	CABIN	4	INTERIOR		FAN	1	13 Watt Compact Fluorescent Fixture	13	0.013	48	1	Re-Lamp with (1) 10 Watt LED A19	10	0.010	37
KEYSTONE STATE PARK	CABIN	4	INTERIOR		BASEMENT	3	13 Watt Compact Fluorescent Fixture	13	0.039	144	3	Re-Lamp with (1) 10 Watt LED A19	10	0.030	111
KEYSTONE STATE PARK	CABIN	4	INTERIOR		SINK	1	1-Lamp F13; No Retrofit	13	0.013	48	1	No Retrofit	13	0.013	48
KEYSTONE STATE PARK	CABIN	4	EXTERIOR		PORCH	1	Existing LED Fixture; No Retrofit	10	0.010	44	1	No Retrofit	10	0.010	44
KEYSTONE STATE PARK	CABIN	5	INTERIOR		DECORATIVE LIGHT	1	9 Watt Compact Fluorescent Fixture	9	0.009	33	1	Re-Lamp with (1) 7 Watt LED A19	7	0.007	26
KEYSTONE STATE PARK	CABIN	5	INTERIOR		FAN LIGHT	1	9 Watt Compact Fluorescent 4-Lamp Fixture	36	0.036	133	1	Re-Lamp with (4) 7 Watt LED A19	28	0.028	104
KEYSTONE STATE PARK	CABIN	5	INTERIOR		DECO LIGHT	2	9 Watt Compact Fluorescent 2-Lamp Fixture	18	0.036	133	2	Re-Lamp with (2) 7 Watt LED A19	14	0.028	104
KEYSTONE STATE PARK	CABIN	5	INTERIOR		FAN LIGHT	1	9 Watt Compact Fluorescent 3-Lamp Fixture	27	0.027	100	1	Re-Lamp with (3) 7 Watt LED A19	21	0.021	78

©2013 Energy Systems Group, LLC

EXISTING FIXTURES											PROPOSED FIXTURE UPGRADE				
Park/Building Name	Building	Building #	Phase	Floor	Room Description	Qty	Description	Watts	kW	kWh	Qty	Description	Watts	kW	kWh
KEYSTONE STATE PARK	CABIN	5	INTERIOR		BATHROOM	1	13 Watt Compact Fluorescent 2-Lamp Fixture	26	0.026	96	1	Re-Lamp with (2) 10 Watt LED A19	20	0.020	74
KEYSTONE STATE PARK	CABIN	5	INTERIOR		FAN	1	13 Watt Compact Fluorescent Fixture	13	0.013	48	1	Re-Lamp with (1) 10 Watt LED A19	10	0.010	37
KEYSTONE STATE PARK	CABIN	5	INTERIOR		BASEMENT	3	13 Watt Compact Fluorescent Fixture	13	0.039	144	3	Re-Lamp with (1) 10 Watt LED A19	10	0.030	111
KEYSTONE STATE PARK	CABIN	5	INTERIOR		SINK	1	1-Lamp F13; No Retrofit	13	0.013	48	1	No Retrofit	13	0.013	48
KEYSTONE STATE PARK	CABIN	5	EXTERIOR		PORCH	1	Existing LED Fixture; No Retrofit	10	0.010	44	1	No Retrofit	10	0.010	44
KEYSTONE STATE PARK	CABIN	6	INTERIOR		DECORATIVE LIGHT	1	9 Watt Compact Fluorescent Fixture	9	0.009	33	1	Re-Lamp with (1) 7 Watt LED A19	7	0.007	26
KEYSTONE STATE PARK	CABIN	6	INTERIOR		FAN LIGHT	1	9 Watt Compact Fluorescent 4-Lamp Fixture	36	0.036	133	1	Re-Lamp with (4) 7 Watt LED A19	28	0.028	104
KEYSTONE STATE PARK	CABIN	6	INTERIOR		DECO LIGHT	2	9 Watt Compact Fluorescent 2-Lamp Fixture	18	0.036	133	2	Re-Lamp with (2) 7 Watt LED A19	14	0.028	104
KEYSTONE STATE PARK	CABIN	6	INTERIOR		FAN LIGHT	1	9 Watt Compact Fluorescent 3-Lamp Fixture	27	0.027	100	1	Re-Lamp with (3) 7 Watt LED A19	21	0.021	78
KEYSTONE STATE PARK	CABIN	6	INTERIOR		BATHROOM	1	13 Watt Compact Fluorescent 2-Lamp Fixture	26	0.026	96	1	Re-Lamp with (2) 10 Watt LED A19	20	0.020	74
KEYSTONE STATE PARK	CABIN	6	INTERIOR		FAN	1	13 Watt Compact Fluorescent Fixture	13	0.013	48	1	Re-Lamp with (1) 10 Watt LED A19	10	0.010	37
KEYSTONE STATE PARK	CABIN	6	INTERIOR		BASEMENT	3	13 Watt Compact Fluorescent Fixture	13	0.039	144	3	Re-Lamp with (1) 10 Watt LED A19	10	0.030	111
KEYSTONE STATE PARK	CABIN	6	INTERIOR		SINK	1	1-Lamp F13; No Retrofit	13	0.013	48	1	No Retrofit	13	0.013	48
KEYSTONE STATE PARK	CABIN	6	EXTERIOR		PORCH	1	Existing LED Fixture; No Retrofit	10	0.010	44	1	No Retrofit	10	0.010	44
KEYSTONE STATE PARK	CABIN	7	INTERIOR		DECORATIVE LIGHT	1	9 Watt Compact Fluorescent Fixture	9	0.009	33	1	Re-Lamp with (1) 7 Watt LED A19	7	0.007	26
KEYSTONE STATE PARK	CABIN	7	INTERIOR		FAN LIGHT	1	9 Watt Compact Fluorescent 4-Lamp Fixture	36	0.036	133	1	Re-Lamp with (4) 7 Watt LED A19	28	0.028	104
KEYSTONE STATE PARK	CABIN	7	INTERIOR		DECO LIGHT	2	9 Watt Compact Fluorescent 2-Lamp Fixture	18	0.036	133	2	Re-Lamp with (2) 7 Watt LED A19	14	0.028	104
KEYSTONE STATE PARK	CABIN	7	INTERIOR		FAN LIGHT	1	9 Watt Compact Fluorescent 3-Lamp Fixture	27	0.027	100	1	Re-Lamp with (3) 7 Watt LED A19	21	0.021	78
KEYSTONE STATE PARK	CABIN	7	INTERIOR		BATHROOM	1	13 Watt Compact Fluorescent 2-Lamp Fixture	26	0.026	96	1	Re-Lamp with (2) 10 Watt LED A19	20	0.020	74
KEYSTONE STATE PARK	CABIN	7	INTERIOR		FAN	1	13 Watt Compact Fluorescent Fixture	13	0.013	48	1	Re-Lamp with (1) 10 Watt LED A19	10	0.010	37
KEYSTONE STATE PARK	CABIN	7	INTERIOR		BASEMENT	3	13 Watt Compact Fluorescent Fixture	13	0.039	144	3	Re-Lamp with (1) 10 Watt LED A19	10	0.030	111
KEYSTONE STATE PARK	CABIN	7	INTERIOR		SINK	1	1-Lamp F13; No Retrofit	13	0.013	48	1	No Retrofit	13	0.013	48
KEYSTONE STATE PARK	CABIN	7	EXTERIOR		PORCH	1	Existing LED Fixture; No Retrofit	10	0.010	44	1	No Retrofit	10	0.010	44
KEYSTONE STATE PARK	CABIN	8	INTERIOR		DECORATIVE LIGHT	1	9 Watt Compact Fluorescent Fixture	9	0.009	33	1	Re-Lamp with (1) 7 Watt LED A19	7	0.007	26
KEYSTONE STATE PARK	CABIN	8	INTERIOR		FAN LIGHT	1	9 Watt Compact Fluorescent 4-Lamp Fixture	36	0.036	133	1	Re-Lamp with (4) 7 Watt LED A19	28	0.028	104
KEYSTONE STATE PARK	CABIN	8	INTERIOR		DECO LIGHT	2	9 Watt Compact Fluorescent 2-Lamp Fixture	18	0.036	133	2	Re-Lamp with (2) 7 Watt LED A19	14	0.028	104

©2013 Energy Systems Group, LLC

EXISTING FIXTURES										PROPOSED FIXTURE UPGRADE				
Park/Building Name	Building	Building #	Phase	Floor	Room Description	Qty	Description	Watts	kW	kWh	Qty	Description	Watts	kW	kWh
KEYSTONE STATE PARK	CABIN	8	INTERIOR		FAN LIGHT	1	9 Watt Compact Fluorescent 3-Lamp Fixture	27	0.027	100	1	Re-Lamp with (3) 7 Watt LED A19	21	0.021	78
KEYSTONE STATE PARK	CABIN	8	INTERIOR		BATHROOM	1	13 Watt Compact Fluorescent 2-Lamp Fixture	26	0.026	96	1	Re-Lamp with (2) 10 Watt LED A19	20	0.020	74
KEYSTONE STATE PARK	CABIN	8	INTERIOR		FAN	1	13 Watt Compact Fluorescent Fixture	13	0.013	48	1	Re-Lamp with (1) 10 Watt LED A19	10	0.010	37
KEYSTONE STATE PARK	CABIN	8	INTERIOR		BASEMENT	3	13 Watt Compact Fluorescent Fixture	13	0.039	144	3	Re-Lamp with (1) 10 Watt LED A19	10	0.030	111
KEYSTONE STATE PARK	CABIN	8	INTERIOR		SINK	1	1-Lamp F13; No Retrofit	13	0.013	48	1	No Retrofit	13	0.013	48
KEYSTONE STATE PARK	CABIN	8	EXTERIOR		PORCH	1	Existing LED Fixture; No Retrofit	10	0.010	44	1	No Retrofit	10	0.010	44
KEYSTONE STATE PARK	CABIN	9	INTERIOR		DECORATIVE LIGHT	1	9 Watt Compact Fluorescent Fixture	9	0.009	33	1	Re-Lamp with (1) 7 Watt LED A19	7	0.007	26
KEYSTONE STATE PARK	CABIN	9	INTERIOR		FAN LIGHT	1	9 Watt Compact Fluorescent 4-Lamp Fixture	36	0.036	133	1	Re-Lamp with (4) 7 Watt LED A19	28	0.028	104
KEYSTONE STATE PARK	CABIN	9	INTERIOR		DECO LIGHT	2	9 Watt Compact Fluorescent 2-Lamp Fixture	18	0.036	133	2	Re-Lamp with (2) 7 Watt LED A19	14	0.028	104
KEYSTONE STATE PARK	CABIN	9	INTERIOR		FAN LIGHT	1	9 Watt Compact Fluorescent 3-Lamp Fixture	27	0.027	100	1	Re-Lamp with (3) 7 Watt LED A19	21	0.021	78
KEYSTONE STATE PARK	CABIN	9	INTERIOR		BATHROOM	1	13 Watt Compact Fluorescent 2-Lamp Fixture	26	0.026	96	1	Re-Lamp with (2) 10 Watt LED A19	20	0.020	74
KEYSTONE STATE PARK	CABIN	9	INTERIOR		FAN	1	13 Watt Compact Fluorescent Fixture	13	0.013	48	1	Re-Lamp with (1) 10 Watt LED A19	10	0.010	37
KEYSTONE STATE PARK	CABIN	9	INTERIOR		BASEMENT	3	13 Watt Compact Fluorescent Fixture	13	0.039	144	3	Re-Lamp with (1) 10 Watt LED A19	10	0.030	111
KEYSTONE STATE PARK	CABIN	9	INTERIOR		SINK	1	1-Lamp F13; No Retrofit	13	0.013	48	1	No Retrofit	13	0.013	48
KEYSTONE STATE PARK	CABIN	9	EXTERIOR		PORCH	1	Existing LED Fixture; No Retrofit	10	0.010	44	1	No Retrofit	10	0.010	44
KEYSTONE STATE PARK	CABIN	10	INTERIOR		DECORATIVE LIGHT	1	9 Watt Compact Fluorescent Fixture	9	0.009	33	1	Re-Lamp with (1) 7 Watt LED A19	7	0.007	26
KEYSTONE STATE PARK	CABIN	10	INTERIOR		FAN LIGHT	1	9 Watt Compact Fluorescent 4-Lamp Fixture	36	0.036	133	1	Re-Lamp with (4) 7 Watt LED A19	28	0.028	104
KEYSTONE STATE PARK	CABIN	10	INTERIOR		DECO LIGHT	2	9 Watt Compact Fluorescent 2-Lamp Fixture	18	0.036	133	2	Re-Lamp with (2) 7 Watt LED A19	14	0.028	104
KEYSTONE STATE PARK	CABIN	10	INTERIOR		FAN LIGHT	1	9 Watt Compact Fluorescent 3-Lamp Fixture	27	0.027	100	1	Re-Lamp with (3) 7 Watt LED A19	21	0.021	78
KEYSTONE STATE PARK	CABIN	10	INTERIOR		BATHROOM	1	13 Watt Compact Fluorescent 2-Lamp Fixture	26	0.026	96	1	Re-Lamp with (2) 10 Watt LED A19	20	0.020	74
KEYSTONE STATE PARK	CABIN	10	INTERIOR		FAN	1	13 Watt Compact Fluorescent Fixture	13	0.013	48	1	Re-Lamp with (1) 10 Watt LED A19	10	0.010	37
KEYSTONE STATE PARK	CABIN	10	INTERIOR		BASEMENT	3	13 Watt Compact Fluorescent Fixture	13	0.039	144	3	Re-Lamp with (1) 10 Watt LED A19	10	0.030	111
KEYSTONE STATE PARK	CABIN	10	INTERIOR		SINK	1	1-Lamp F13; No Retrofit	13	0.013	48	1	No Retrofit	13	0.013	48
KEYSTONE STATE PARK	CABIN	10	EXTERIOR		PORCH	1	Existing LED Fixture; No Retrofit	10	0.010	44	1	No Retrofit	10	0.010	44
KEYSTONE STATE PARK	VISITOR CENTER		INTERIOR		VISITOR CENTER	13	Decorative Specialty Fixture; No Retrofit	0	0.000	0	13	No Retrofit	0	0.000	0
KEYSTONE STATE PARK	VISITOR CENTER		EXTERIOR		PORCH	1	13 Watt Compact Fluorescent Fixture	13	0.013	57	1	Re-Lamp with (1) 10 Watt LED A19	10	0.010	44

©2013 Energy Systems Group, LLC

EXISTING FIXTURES											PROPOSED FIXTURE UPGRADE				
Park/Building Name	Building	Building #	Phase	Floor	Room Description	Qty	Description	Watts	kW	kWh	Qty	Description	Watts	kW	kWh
KEYSTONE STATE PARK	VISITOR CENTER		INTERIOR		EMERGENCY LIGHT	1	Incandescent Exit Sign; Combo Emergency Heads	50	0.050	438	1	New 3 watt LED Exit Sign with Emergency Combo Heads	3	0.003	26
KEYSTONE STATE PARK	VISITOR CENTER		INTERIOR		PIPECHASE	1	T8 1x4 2-Lamp Strip Fixture	62	0.062	62	1	Retrofit with (2) 12.5 Watt LED T8 4' Lamps; Direct Wire to Socket	25	0.025	25
KEYSTONE STATE PARK	VISITOR CENTER		INTERIOR		PIPECHASE	1	T8 1x4 2-Lamp Strip Fixture	62	0.062	62	1	Retrofit with (2) 12.5 Watt LED T8 4' Lamps; Direct Wire to Socket	25	0.025	25
KEYSTONE STATE PARK	VISITOR CENTER		INTERIOR		BASEMENT	2	T12 1x4 2-Lamp Strip Fixture	72	0.144	324	2	Retrofit with (2) 12.5 Watt LED T8 4' Lamps; Direct Wire to Socket	25	0.050	112
KEYSTONE STATE PARK	VISITOR CENTER		INTERIOR		BASEMENT	1	T8 1x4 2-Lamp Strip Fixture	62	0.062	139	1	Retrofit with (2) 12.5 Watt LED T8 4' Lamps; Direct Wire to Socket	25	0.025	56
KEYSTONE STATE PARK	VISITOR CENTER		INTERIOR		2ND FLOOR	12	100 Watt Incandescent G40 Fixture	100	1.200	2,698	12	Relamp with (1) 14 Watt LED G40	14	0.168	378
KEYSTONE STATE PARK	VISITOR CENTER		INTERIOR		FANS	3	13 Watt Compact Fluorescent Fixture	13	0.039	88	3	Re-Lamp with (1) 10 Watt LED A19	10	0.030	67
KEYSTONE STATE PARK	VISITOR CENTER		INTERIOR		BACK ROOM	5	100 Watt Incandescent A-Lamp Fixture	100	0.500	1,124	5	Re-Lamp with (1) 18 Watt LED A21	18	0.090	202
KEYSTONE STATE PARK	VISITOR CENTER		INTERIOR		BACK ROOM	1	Incandescent Exit Sign; Combo Emergency Heads	50	0.050	438	1	New 3 watt LED Exit Sign with Emergency Combo Heads	3	0.003	26
KEYSTONE STATE PARK	YURT 1		INTERIOR		YURT	2	13 Watt Compact Fluorescent Fixture	13	0.026	96	2	Re-Lamp with (1) 10 Watt LED A19	10	0.020	74
KEYSTONE STATE PARK	YURT 1		EXTERIOR		YURT	1	100 Watt Incandescent A-Lamp Fixture	100	0.100	288	1	Re-Lamp with (1) 18 Watt LED A21	18	0.018	52
KEYSTONE STATE PARK	YURT 2		INTERIOR		YURT	2	13 Watt Compact Fluorescent Fixture	13	0.026	96	2	Re-Lamp with (1) 10 Watt LED A19	10	0.020	74
KEYSTONE STATE PARK	YURT 2		EXTERIOR		YURT	1	100 Watt Incandescent A-Lamp Fixture	100	0.100	288	1	Re-Lamp with (1) 18 Watt LED A21	18	0.018	52
KEYSTONE STATE PARK	WATER TREATMENT		INTERIOR		WATER TREATMENT	6	T8 2x4 4-Lamp Troffer Fixture	106	0.636	1,755	6	Retrofit with (4) 12.5 Watt LED T8 4' Lamps; Direct Wire to Socket	50	0.300	828
KEYSTONE STATE PARK	WATER TREATMENT		EXTERIOR		WATER TREATMENT	1	100 Watt Metal Halide Wall Pack Fixture	125	0.125	548	1	New 24 Watt LED Wall Pack Fixture; Non-Dark Sky	25	0.025	110
KEYSTONE STATE PARK	COTTAGE		INTERIOR		COTTAGE	1	13 Watt Compact Fluorescent 3-Lamp Fixture	39	0.039	144	1	Re-Lamp with (3) 10 Watt LED A19	30	0.030	111
KEYSTONE STATE PARK	COTTAGE		EXTERIOR		PORCH	1	13 Watt Compact Fluorescent Fixture	13	0.013	57	1	Re-Lamp with (1) 10 Watt LED A19	10	0.010	44
KEYSTONE STATE PARK	LAKESIDE SHOWERHOUSE		INTERIOR		SHOWER HOUSE	8	42 Watt Compact Fluorescent 12" Downlight Fixture	42	0.336	1,539	8	Re-Lamp with (1) 17 Watt LED BR40	17	0.136	623
KEYSTONE STATE PARK	LAKESIDE SHOWERHOUSE		INTERIOR		SHOWER HOUSE	6	T8 1x4 2-Lamp Wrap Fixture	62	0.372	1,704	6	Retrofit with (2) 12.5 Watt LED T8 4' Lamps; Direct Wire to Socket	25	0.150	687
KEYSTONE STATE PARK	LAKESIDE SHOWERHOUSE		INTERIOR		SHOWER HOUSE	2	Incandescent Exit Sign; Combo Emergency Heads	50	0.100	876	2	New 3 watt LED Exit Sign with Emergency Combo Heads	3	0.006	53
KEYSTONE STATE PARK	LAKESIDE SHOWERHOUSE		INTERIOR		FAMILY ASSISTANCE	3	T8 1x4 2-Lamp Wrap Fixture	62	0.186	852	3	Retrofit with (2) 12.5 Watt LED T8 4' Lamps; Direct Wire to Socket	25	0.075	344
KEYSTONE STATE PARK	LAKESIDE SHOWERHOUSE		INTERIOR		FAMILY ASSISTANCE	1	100 Watt Metal Halide 12" Downlight Fixture	125	0.125	573	1	Retrofit with 23 Watt LED 12" Downlight	23	0.023	105
KEYSTONE STATE PARK	LAKESIDE SHOWERHOUSE		INTERIOR		FAMILY ASSISTANCE	3	100 Watt Metal Halide 12" Downlight Fixture	125	0.375	1,718	3	Retrofit with 23 Watt LED 12" Downlight	23	0.069	316
KEYSTONE STATE PARK	LAKESIDE SHOWERHOUSE		INTERIOR		PIPECHASE	4	T8 1x4 2-Lamp Industrial Strip Fixture	62	0.248	248	4	Retrofit with (2) 12.5 Watt LED T8 4' Lamps; Direct Wire to Socket	25	0.100	100
KEYSTONE STATE PARK	LAKESIDE SHOWERHOUSE		INTERIOR		KIOSK	2	42 Watt Compact Fluorescent 12" Downlight Fixture	42	0.084	385	2	Re-Lamp with (1) 17 Watt LED BR40	17	0.034	156
KEYSTONE STATE PARK	ELECTRICAL BUILDING		INTERIOR		ELECTRICAL BUILDING	2	T8 1x4 2-Lamp Industrial Strip Fixture	62	0.124	279	2	Retrofit with (2) 12.5 Watt LED T8 4' Lamps; Direct Wire to Socket	25	0.050	112

©2013 Energy Systems Group, LLC

EXISTING FIXTURES											PROPOSED FIXTURE UPGRADE				
Park/Building Name	Building	Building #	Phase	Floor	Room Description	Qty	Description	Watts	kW	kWh	Qty	Description	Watts	kW	kWh
KEYSTONE STATE PARK	ELECTRICAL BUILDING		EXTERIOR		ELECTRICAL BUILDING	1	175 Watt Metal Halide Wall Pack Fixture	213	0.213	933	1	New 37 Watt LED Wall Pack Fixture; Non-Dark Sky	39	0.039	171
KEYSTONE STATE PARK	ELECTRICAL BUILDING		INTERIOR		PIPECHASE	2	T8 1x4 2-Lamp Industrial Strip Fixture	62	0.124	124	2	Retrofit with (2) 12.5 Watt LED T8 4' Lamps; Direct Wire to Socket	25	0.050	50
KEYSTONE STATE PARK	ELECTRICAL BUILDING		INTERIOR		LIFEGUARD ROOM	13	42 Watt Compact Fluorescent 12" Downlight Fixture	42	0.546	1,227	13	Re-Lamp with (1) 17 Watt LED BR40	17	0.221	497
KEYSTONE STATE PARK	ELECTRICAL BUILDING		INTERIOR		LIFEGUARD ROOM	2	T8 1x4 2-Lamp Vaportight Fixture	62	0.124	279	2	Retrofit with (2) 12.5 Watt LED T8 4' Lamps; Direct Wire to Socket	25	0.050	112
KEYSTONE STATE PARK	ELECTRICAL BUILDING		INTERIOR		BATHROOM	1	T8 1x4 2-Lamp Wrap Fixture	62	0.062	32	1	Retrofit with (2) 12.5 Watt LED T8 4' Lamps; Direct Wire to Socket	25	0.025	13
KEYSTONE STATE PARK	ELECTRICAL BUILDING		INTERIOR		BOILER ROOM	6	T8 1x4 2-Lamp Industrial Strip Fixture	62	0.372	372	6	Retrofit with (2) 12.5 Watt LED T8 4' Lamps; Direct Wire to Socket	25	0.150	150
KEYSTONE STATE PARK	ELECTRICAL BUILDING		INTERIOR		PIPECHASE	2	T8 1x4 2-Lamp Industrial Strip Fixture	62	0.124	124	2	Retrofit with (2) 12.5 Watt LED T8 4' Lamps; Direct Wire to Socket	25	0.050	50
KEYSTONE STATE PARK	BEACH HOUSE		INTERIOR		BEACH HOUSE	10	T8 1x4 2-Lamp Vanity Fixture	62	0.620	1,711	10	Retrofit with (2) 12.5 Watt LED T8 4' Lamps; Direct Wire to Socket	25	0.250	690
KEYSTONE STATE PARK	BEACH HOUSE		INTERIOR		MENS RESTROOM	14	42 Watt Compact Fluorescent 12" Downlight Fixture	42	0.588	1,623	14	Re-Lamp with (1) 17 Watt LED BR40	17	0.238	657
KEYSTONE STATE PARK	BEACH HOUSE		INTERIOR		MENS RESTROOM	9	T8 1x4 2-Lamp Wrap Fixture	62	0.558	1,540	9	Retrofit with (2) 12.5 Watt LED T8 4' Lamps; Direct Wire to Socket	25	0.225	621
KEYSTONE STATE PARK	BEACH HOUSE		INTERIOR		BREEZEWAY	7	42 Watt Compact Fluorescent 12" Downlight Fixture	42	0.294	811	7	Re-Lamp with (1) 17 Watt LED BR40	17	0.119	328
KEYSTONE STATE PARK	BEACH HOUSE		INTERIOR		PIPECHASE	1	T8 1x4 2-Lamp Industrial Strip Fixture	62	0.062	62	1	Retrofit with (2) 12.5 Watt LED T8 4' Lamps; Direct Wire to Socket	25	0.025	25
KEYSTONE STATE PARK	BEACH HOUSE		INTERIOR		PIPECHASE	3	T8 1x4 2-Lamp Industrial Strip Fixture	62	0.186	186	3	Retrofit with (2) 12.5 Watt LED T8 4' Lamps; Direct Wire to Socket	25	0.075	75
KEYSTONE STATE PARK	BEACH HOUSE		INTERIOR		WOMENS RESTROOM	14	42 Watt Compact Fluorescent 12" Downlight Fixture	42	0.588	1,623	14	Re-Lamp with (1) 17 Watt LED BR40	17	0.238	657
KEYSTONE STATE PARK	BEACH HOUSE		INTERIOR		WOMENS RESTROOM	9	T8 1x4 2-Lamp Wrap Fixture	62	0.558	1,540	9	Retrofit with (2) 12.5 Watt LED T8 4' Lamps; Direct Wire to Socket	25	0.225	621
KEYSTONE STATE PARK	PARK OFFICE		INTERIOR		PARK OFFICE	4	T8 2x4 4-Lamp Troffer Fixture	106	0.424	953	4	Retrofit with (4) 12.5 Watt LED T8 4' Lamps; Direct Wire to Socket	50	0.200	450
KEYSTONE STATE PARK	PARK OFFICE		INTERIOR		OPEN AREA	5	T8 2x4 4-Lamp Troffer Fixture	106	0.530	1,191	5	Retrofit with (4) 12.5 Watt LED T8 4' Lamps; Direct Wire to Socket	50	0.250	562
KEYSTONE STATE PARK	PARK OFFICE		INTERIOR		MANAGERS OFFICE	2	T8 2x4 4-Lamp Troffer Fixture	106	0.212	477	2	Retrofit with (4) 12.5 Watt LED T8 4' Lamps; Direct Wire to Socket	50	0.100	225
KEYSTONE STATE PARK	PARK OFFICE		INTERIOR		BATHROOM	1	T12 2x2 2-Lamp U-Lamp Troffer Fixture with 6" Lamps	72	0.072	38	1	Retrofit with (2) 10 Watt LED T8 2' Lamps and (1) 2x2 2-Lamp White Reflector Kit; Direct Wire to Socket	20	0.020	10
KEYSTONE STATE PARK	PARK OFFICE		EXTERIOR		EXTERIOR	3	150 Watt Metal Halide Wall Pack Fixture	180	0.540	2,365	3	New 37 Watt LED Wall Pack Fixture; Non-Dark Sky	39	0.117	512
KEYSTONE STATE PARK	PARK OFFICE		INTERIOR		EMERGENCY LIGHT	1	Incandescent Exit Sign; Combo Emergency Heads	50	0.050	438	1	New 3 watt LED Exit Sign with Emergency Combo Heads	3	0.003	26
KEYSTONE STATE PARK	RESIDENT/MANAGER HOUSE		INTERIOR		FAN	4	13 Watt Compact Fluorescent Fixture	13	0.052	193	4	Re-Lamp with (1) 10 Watt LED A19	10	0.040	148
KEYSTONE STATE PARK	RESIDENT/MANAGER HOUSE		INTERIOR		FRIDGE ROOM	1	Circline Fixture; No Retrofit	30	0.030	111	1	No Retrofit	30	0.030	111
KEYSTONE STATE PARK	RESIDENT/MANAGER HOUSE		INTERIOR		BATHROOM	1	13 Watt Compact Fluorescent 2-Lamp Fixture	26	0.026	96	1	Re-Lamp with (2) 10 Watt LED A19	20	0.020	74
KEYSTONE STATE PARK	RESIDENT/MANAGER HOUSE		INTERIOR		BATHROOM	2	50 Watt Incandescent MR16 Fixture	50	0.100	370	2	Re-Lamp with (1) 7 Watt LED MR16	7	0.014	52
KEYSTONE STATE PARK	RESIDENT/MANAGER HOUSE		INTERIOR		LIVING ROOM	1	13 Watt Compact Fluorescent 3-Lamp Fixture	39	0.039	144	1	Re-Lamp with (3) 10 Watt LED A19	30	0.030	111

©2013 Energy Systems Group, LLC

EXISTING FIXTURES											PROPOSED FIXTURE UPGRADE				
Park/Building Name	Building	Building #	Phase	Floor	Room Description	Qty	Description	Watts	kW	kWh	Qty	Description	Watts	kW	kWh
KEYSTONE STATE PARK	RESIDENT/MANAGER HOUSE		INTERIOR		FAMILY ROOM	1	13 Watt Compact Fluorescent 4-Lamp Fixture	52	0.052	193	1	Re-Lamp with (4) 10 Watt LED A19	40	0.040	148
KEYSTONE STATE PARK	RESIDENT/MANAGER HOUSE		INTERIOR		STAIRS	1	13 Watt Compact Fluorescent Fixture	13	0.013	48	1	Re-Lamp with (1) 10 Watt LED A19	10	0.010	37
KEYSTONE STATE PARK	RESIDENT/MANAGER HOUSE		INTERIOR		FRONT	1	13 Watt Compact Fluorescent Fixture	13	0.013	48	1	Re-Lamp with (1) 10 Watt LED A19	10	0.010	37
KEYSTONE STATE PARK	RESIDENT/MANAGER HOUSE		INTERIOR		FRONT ROOM	2	13 Watt Compact Fluorescent Fixture	13	0.026	96	2	Re-Lamp with (1) 10 Watt LED A19	10	0.020	74
KEYSTONE STATE PARK	RESIDENT/MANAGER HOUSE		INTERIOR		FRONT	2	100 Watt Incandescent A-Lamp Fixture	100	0.200	741	2	Re-Lamp with (1) 18 Watt LED A21	18	0.036	133
KEYSTONE STATE PARK	RESIDENT/MANAGER HOUSE		INTERIOR		SIDE ROOM	6	50 Watt Incandescent MR16 Fixture	50	0.300	1,111	6	Re-Lamp with (1) 7 Watt LED MR16	7	0.042	156
KEYSTONE STATE PARK	RESIDENT/MANAGER HOUSE		INTERIOR		BASEMENT	4	100 Watt Incandescent A-Lamp Downlight Fixture	100	0.400	1,482	4	Re-Lamp with (1) 17 Watt LED BR40	17	0.068	252
KEYSTONE STATE PARK	RESIDENT/MANAGER HOUSE		INTERIOR		BASEMENT	4	T12 2x4 2-Lamp Troffer Fixture	78	0.312	1,156	4	Retrofit with (2) 12.5 Watt LED T8 4' Lamps; Direct Wire to Socket	25	0.100	370
FORBES FOREST	DISTRICT OFFICE		INTERIOR		FRONT OFFICE	20	T5 2x2 2-Lamp Surface Mount Fixture	32	0.640	1,331	20	Retrofit with (2) 9 Watt LED 2' T5 Lamps; Direct Wire to Socket	18	0.360	749
FORBES FOREST	DISTRICT OFFICE		INTERIOR		OFFICE	4	T5 2x2 2-Lamp Surface Mount Fixture	32	0.128	266	4	Retrofit with (2) 9 Watt LED 2' T5 Lamps; Direct Wire to Socket	18	0.072	150
FORBES FOREST	DISTRICT OFFICE		INTERIOR		CLOSETS	6	60 Watt Incandescent A-Lamp Fixture	60	0.360	360	6	Re-Lamp with (1) 10 Watt LED A19	10	0.060	60
FORBES FOREST	DISTRICT OFFICE		INTERIOR		OFFICE	3	T5 2x2 2-Lamp Surface Mount Fixture	32	0.096	200	3	Retrofit with (2) 9 Watt LED 2' T5 Lamps; Direct Wire to Socket	18	0.054	112
FORBES FOREST	DISTRICT OFFICE		INTERIOR		FAX ROOM	5	T5 2x2 2-Lamp Surface Mount Fixture	32	0.160	333	5	Retrofit with (2) 9 Watt LED 2' T5 Lamps; Direct Wire to Socket	18	0.090	187
FORBES FOREST	DISTRICT OFFICE		INTERIOR		RANGERS	3	T5 2x2 2-Lamp Surface Mount Fixture	32	0.096	200	3	Retrofit with (2) 9 Watt LED 2' T5 Lamps; Direct Wire to Socket	18	0.054	112
FORBES FOREST	DISTRICT OFFICE		INTERIOR		CONFERENCE	4	T5 2x2 2-Lamp Surface Mount Fixture	32	0.128	266	4	Retrofit with (2) 9 Watt LED 2' T5 Lamps; Direct Wire to Socket	18	0.072	150
FORBES FOREST	DISTRICT OFFICE		INTERIOR		OFFICE	2	T5 2x2 2-Lamp Surface Mount Fixture	32	0.064	133	2	Retrofit with (2) 9 Watt LED 2' T5 Lamps; Direct Wire to Socket	18	0.036	75
FORBES FOREST	DISTRICT OFFICE		INTERIOR		OFFICE	4	T5 2x2 2-Lamp Surface Mount Fixture; Dimming	32	0.128	266	4	No Retrofit	32	0.128	266
FORBES FOREST	DISTRICT OFFICE		INTERIOR		DON STIHLER	4	T5 2x2 2-Lamp Surface Mount Fixture; Dimming	32	0.128	266	4	No Retrofit	32	0.128	266
FORBES FOREST	DISTRICT OFFICE		INTERIOR		HEAD MANAGER	4	T5 2x2 2-Lamp Surface Mount Fixture; Dimming	32	0.128	266	4	No Retrofit	32	0.128	266
FORBES FOREST	DISTRICT OFFICE		INTERIOR		OFFICE	4	T5 2x2 2-Lamp Surface Mount Fixture; Dimming	32	0.128	266	4	No Retrofit	32	0.128	266
FORBES FOREST	DISTRICT OFFICE		INTERIOR		HALLWAY	8	42 Watt Plug-In CFL Downlight Fixture	42	0.336	699	8	No Retrofit	42	0.336	699
FORBES FOREST	DISTRICT OFFICE		INTERIOR		BACK HALLWAY	4	42 Watt Plug-In CFL Downlight Fixture	42	0.168	349	4	No Retrofit	42	0.168	349
FORBES FOREST	DISTRICT OFFICE		INTERIOR		BATHROOM	1	T8 2x3 2-Lamp Troffer Fixture	49	0.049	26	1	Retrofit with (2) 12 Watt LED T8 3' Lamps; Direct Wire to Socket	24	0.024	13
FORBES FOREST	DISTRICT OFFICE		INTERIOR		BATHROOM	1	T8 2x3 2-Lamp Vanity Fixture	49	0.049	26	1	Retrofit with (2) 12 Watt LED T8 3' Lamps; Direct Wire to Socket	24	0.024	13
FORBES FOREST	DISTRICT OFFICE		INTERIOR		BATHROOM	1	T8 2x3 2-Lamp Troffer Fixture	49	0.049	26	1	Retrofit with (2) 12 Watt LED T8 3' Lamps; Direct Wire to Socket	24	0.024	13
FORBES FOREST	DISTRICT OFFICE		INTERIOR		BATHROOM	1	T8 2x3 2-Lamp Vanity Fixture	49	0.049	26	1	Retrofit with (2) 12 Watt LED T8 3' Lamps; Direct Wire to Socket	24	0.024	13

©2013 Energy Systems Group, LLC

EXISTING FIXTURES											PROPOSED FIXTURE UPGRADE				
Park/Building Name	Building	Building #	Phase	Floor	Room Description	Qty	Description	Watts	kW	kWh	Qty	Description	Watts	kW	kWh
FORBES FOREST	DISTRICT OFFICE		INTERIOR		BATHROOM	1	T8 2x3 2-Lamp Troffer Fixture	49	0.049	26	1	Retrofit with (2) 12 Watt LED T8 3' Lamps; Direct Wire to Socket	24	0.024	13
FORBES FOREST	DISTRICT OFFICE		INTERIOR		BATHROOM	1	T8 2x3 2-Lamp Vanity Fixture	49	0.049	26	1	Retrofit with (2) 12 Watt LED T8 3' Lamps; Direct Wire to Socket	24	0.024	13
FORBES FOREST	DISTRICT OFFICE		INTERIOR		CONFERENCE	12	T5 2x2 2-Lamp Troffer Fixture	32	0.384	799	12	Retrofit with (2) 9 Watt LED 2' T5 Lamps; Direct Wire to Socket	18	0.216	449
FORBES FOREST	DISTRICT OFFICE		INTERIOR		STAIRS	2	T8 2x2 2-Lamp Troffer Fixture	36	0.072	631	2	Retrofit with (2) 10 Watt LED T8 2' Lamps; Direct Wire to Socket	20	0.040	350
FORBES FOREST	DISTRICT OFFICE		INTERIOR		BASEMENT	15	T12 2x4 4-Lamp Troffer Fixture	144	2.160	8,344	15	Retrofit with (4) 12.5 Watt LED T8 4' Lamps; Direct Wire to Socket	50	0.750	2,897
FORBES FOREST	DISTRICT OFFICE		INTERIOR		BASEMENT	1	T8 1x4 2-Lamp Vanity Fixture	62	0.062	129	1	Retrofit with (2) 12.5 Watt LED T8 4' Lamps; Direct Wire to Socket	25	0.025	52
FORBES FOREST	DISTRICT OFFICE		INTERIOR		OTHER SIDE OF BASEMENT	10	TT5 2x2 2-Lamp FT40 Troffer Fixture with 40 Watt Biax Lamps	76	0.760	1,581	10	Retrofit with (2) 17 Watt LED FT40; Direct Wire to Socket	34	0.340	707
FORBES FOREST	DISTRICT OFFICE		INTERIOR		CLOSET	1	TT5 2x2 2-Lamp FT40 Troffer Fixture with 40 Watt Biax Lamps	76	0.076	76	1	Retrofit with (2) 17 Watt LED FT40; Direct Wire to Socket	34	0.034	34
FORBES FOREST	DISTRICT OFFICE		INTERIOR		CLOSET	1	TT5 2x2 2-Lamp FT40 Troffer Fixture with 40 Watt Biax Lamps	76	0.076	76	1	Retrofit with (2) 17 Watt LED FT40; Direct Wire to Socket	34	0.034	34
FORBES FOREST	DISTRICT OFFICE		INTERIOR		CLOSET	2	T8 1x4 2-Lamp Wrap Fixture	62	0.124	124	2	Retrofit with (2) 12.5 Watt LED T8 4' Lamps; Direct Wire to Socket	25	0.050	50
FORBES FOREST	DISTRICT OFFICE		INTERIOR		BATHROOM	1	60 Watt Incandescent A-Lamp Fixture	60	0.060	125	1	Re-Lamp with (1) 10 Watt LED A19	10	0.010	21
FORBES FOREST	DISTRICT OFFICE		INTERIOR		EMERGENCY LIGHT	7	Incandescent Exit Sign; Combo Emergency Heads	50	0.350	3,066	7	New 3 watt LED Exit Sign with Emergency Combo Heads	3	0.021	184
FORBES FOREST	DISTRICT OFFICE		EXTERIOR		EXTERIOR	8	Incandescent Exit Sign; Combo Emergency Heads	50	0.400	3,504	8	New 3 watt LED Exit Sign with Emergency Combo Heads	3	0.024	210
FORBES FOREST	DISTRICT OFFICE		EXTERIOR		EXTERIOR	10	42 Watt Compact Fluorescent Downlight Fixture	42	0.420	1,840	10	Retrofit with 22 Watt LED 6" Downlight	22	0.220	964
FORBES FOREST	DISTRICT OFFICE		EXTERIOR		EXTERIOR	10	42 Watt Compact Fluorescent Downlight Fixture; Very Difficult Access	42	0.420	1,840	10	Retrofit with 22 Watt LED 6" Downlight; Very Difficult Access	22	0.220	964
FORBES FOREST	DISTRICT OFFICE		EXTERIOR		OUTDOOR BACK	1	250 Watt Metal Halide Wall Pack Fixture	295	0.295	1,292	1	New 55 Watt LED Wall Pack Fixture; Non-Dark Sky	57	0.057	250
FORBES FOREST	DISTRICT OFFICE		EXTERIOR		OUTDOOR BACK DOOR	1	42 Watt Compact Fluorescent Wall Pack Fixture	42	0.042	184	1	New 24 Watt LED Wall Pack Fixture; Non-Dark Sky	25	0.025	110
FORBES FOREST	DISTRICT OFFICE		EXTERIOR		FLOOD	1	100 Watt Incandescent A-Lamp Fixture	100	0.100	438	1	Re-Lamp with (1) 18 Watt LED A21	18	0.018	79
FORBES FOREST	DISTRICT OFFICE		EXTERIOR		POLE HEAD	8	250 Watt Metal Halide Shoebox Fixture	295	2.360	10,337	8	New 125 Watt LED Shoebox Fixture	134	1.072	4,695
FORBES FOREST	DISTRICT OFFICE		EXTERIOR		FLOOD	1	150 Watt Quartz Flood Fixture	150	0.150	657	1	New 26 Watt LED Flood Fixture	27	0.027	118
FORBES FOREST	DISTRICT OFFICE		EXTERIOR		EXTERIOR SHOP	7	T8 1x4 2-Lamp Wrap Fixture	62	0.434	1,901	7	Retrofit with (2) 12.5 Watt LED T8 4' Lamps; Direct Wire to Socket	25	0.175	767
FORBES FOREST	DISTRICT OFFICE		INTERIOR		MECHANICAL ROOM	3	T8 1x4 2-Lamp Wrap Fixture	62	0.186	186	3	Retrofit with (2) 12.5 Watt LED T8 4' Lamps; Direct Wire to Socket	25	0.075	75
FORBES FOREST	DISTRICT OFFICE		INTERIOR		STAIRS	2	T8 1x4 2-Lamp Wrap Fixture	62	0.124	1,086	2	Retrofit with (2) 12.5 Watt LED T8 4' Lamps; Direct Wire to Socket	25	0.050	438
FORBES FOREST	DISTRICT OFFICE		INTERIOR		STAIRS	2	T8 1x4 2-Lamp Wrap Fixture	62	0.124	1,086	2	Retrofit with (2) 12.5 Watt LED T8 4' Lamps; Direct Wire to Socket	25	0.050	438
FORBES FOREST	MAINTENANCE HEADQUARTERS		INTERIOR		BAY	8	T12HO 1x8 2-Lamp Industrial Strip Fixture with 95 Watt Lamps	207	1.656	3,444	8	Retrofit with (4) 12.5 Watt LED T8 4' Lamps and (1) 1x8 4-Lamp Industrial Strip Kit; Direct Wire to Socket	50	0.400	832
FORBES FOREST	MAINTENANCE HEADQUARTERS		INTERIOR		HALLWAY	8	T12 2x2 2-Lamp U-Lamp Troffer Fixture with 6" Lamps	72	0.576	1,198	8	Retrofit with (2) 10 Watt LED T8 2' Lamps and (1) 2x2 4-Lamp Troffer Retrofit Kit; Direct Wire to Socket	20	0.160	333

©2013 Energy Systems Group, LLC

EXISTING FIXTURES												PROPOSED FIXTURE UPGRADE				
Park/Building Name	Building	Building #	Phase	Floor	Room Description	Qty	Description	Watts	kW	kWh	Qty	Description	Watts	kW	kWh
FORBES FOREST	MAINTENANCE HEADQUARTERS		INTERIOR		OFFICE	2	T12 2x4 4-Lamp Troffer Fixture	144	0.288	599	2	Retrofit with (4) 12.5 Watt LED T8 4' Lamps; Direct Wire to Socket	50	0.100	208
FORBES FOREST	MAINTENANCE HEADQUARTERS		INTERIOR		OFFICE	2	T12 2x2 2-Lamp U-Lamp Troffer Fixture with 6" Lamps	72	0.144	300	2	Retrofit with (2) 10 Watt LED T8 2' Lamps and (1) 2x2 2-Lamp White Reflector Kit; Direct Wire to Socket	20	0.040	83
FORBES FOREST	MAINTENANCE HEADQUARTERS		INTERIOR		RESTROOM	2	T8 2x4 4-Lamp Surface Mount Fixture	106	0.212	111	2	Retrofit with (4) 12.5 Watt LED T8 4' Lamps; Direct Wire to Socket	50	0.100	52
FORBES FOREST	MAINTENANCE HEADQUARTERS		INTERIOR		RESTROOM	1	100 Watt Incandescent A-Lamp Fixture	100	0.100	52	1	Re-Lamp with (1) 18 Watt LED A21	18	0.018	9
FORBES FOREST	MAINTENANCE HEADQUARTERS		INTERIOR		BAY	13	T12 1x8 2-Lamp Industrial Strip Fixture with 60 Watt Lamps	123	1.599	3,326	13	Retrofit with (4) 12.5 Watt LED T8 4' Lamps and (1) 1x8 4-Lamp Industrial Strip Kit; Direct Wire to Socket	50	0.650	1,352
FORBES FOREST	MAINTENANCE HEADQUARTERS		INTERIOR		BAY	4	T12 1x4 2-Lamp Industrial Strip Fixture	72	0.288	599	4	Retrofit with (2) 12.5 Watt LED T8 4' Lamps; Direct Wire to Socket	25	0.100	208
FORBES FOREST	MAINTENANCE HEADQUARTERS		INTERIOR		BAY	8	T12 1x8 2-Lamp Industrial Strip Fixture with 60 Watt Lamps	123	0.984	2,047	8	Retrofit with (4) 12.5 Watt LED T8 4' Lamps and (1) 1x8 4-Lamp Industrial Strip Kit; Direct Wire to Socket	50	0.400	832
FORBES FOREST	MAINTENANCE HEADQUARTERS		EXTERIOR		EXTERIOR ABOVE DOOR	2	90 Watt Incandescent PAR38 2-Lamp Fixture	180	0.360	1,577	2	Re-Lamp with (2) 17 Watt LED PAR38	34	0.068	298
FORBES FOREST	MAINTENANCE HEADQUARTERS		INTERIOR		EXPLOSION PROOF ROOM	1	100 Watt Incandescent A-Lamp Fixture	100	0.100	208	1	Re-Lamp with (1) 18 Watt LED A21	18	0.018	37
FORBES FOREST	MAINTENANCE HEADQUARTERS		INTERIOR		BUILDING	40	T12 1x4 2-Lamp Vaportight Fixture	72	2.880	5,990	40	Retrofit with (2) 12.5 Watt LED T8 4' Lamps; Direct Wire to Socket	25	1.000	2,080
FORBES FOREST	MAINTENANCE HEADQUARTERS		INTERIOR		BUILDING	3	Incandescent Exit Sign; Combo Emergency Heads	50	0.150	1,314	3	New 3 watt LED Exit Sign with Emergency Combo Heads	3	0.009	79
FORBES FOREST	MAINTENANCE HEADQUARTERS		EXTERIOR		EXTERIOR	7	175 Watt Metal Halide Wall Pack Fixture	213	1.491	6,531	7	New 37 Watt LED Wall Pack Fixture; Non-Dark Sky	39	0.273	1,196
FORBES FOREST	MAINTENANCE HEADQUARTERS		INTERIOR		EXTERIOR	2	Incandescent Exit Sign; Combo Emergency Heads	50	0.100	876	2	New 3 watt LED Exit Sign with Emergency Combo Heads	3	0.006	53
FORBES FOREST	MAINTENANCE HEADQUARTERS		EXTERIOR		POLE HEADS	2	400 Watt Mercury Vapor Shoebox Fixture	455	0.910	3,986	2	New 150 Watt LED Shoebox Fixture	155	0.310	1,358
FORBES FOREST	UPPER POLE BUILDING		INTERIOR		UPPER POLE BUILDING	6	100 Watt Incandescent A-Lamp Fixture	100	0.600	1,248	6	Re-Lamp with (1) 18 Watt LED A21	18	0.108	225
FORBES FOREST	UPPER POLE BUILDING		EXTERIOR		EXTERIOR	4	90 Watt Incandescent PAR38 Fixture	90	0.360	1,577	4	Re-Lamp with (1) 17 Watt LED PAR38	17	0.068	298
FORBES FOREST	RT31 POLE BUILDING		INTERIOR		RT31 POLE BUILDING	10	100 Watt Incandescent A-Lamp Fixture	100	1.000	2,080	10	Re-Lamp with (1) 18 Watt LED A21	18	0.180	374
FORBES FOREST	RT31 POLE BUILDING		EXTERIOR		POLE LIGHT/WALLPACKS	3	175 Watt Mercury Vapor Shoebox Fixture	210	0.630	2,759	3	New 78 Watt LED Shoebox Fixture	78	0.234	1,025
FORBES FOREST	RT31 POLE BUILDING		EXTERIOR		POLE LIGHT/WALLPACKS	3	175 Watt Mercury Vapor Wall Pack Fixture	210	0.630	2,759	3	New 37 Watt LED Wall Pack Fixture; Non-Dark Sky	39	0.117	512
FORBES FOREST	RT31 POLE BUILDING		EXTERIOR		SEQUIRITY LIGHT	2	90 Watt Incandescent PAR38 Fixture	90	0.180	788	2	Re-Lamp with (1) 17 Watt LED PAR38	17	0.034	149
FORBES FOREST	MOUNT DAVIS MAINTENANCE HEADQUARTERS		INTERIOR		OFFICE	1	T12 1x4 4-Lamp Wrap Fixture	144	0.144	300	1	Retrofit with (4) 12.5 Watt LED T8 4' Lamps; Direct Wire to Socket	50	0.050	104
FORBES FOREST	MOUNT DAVIS MAINTENANCE HEADQUARTERS		INTERIOR		HIGHBAYS	6	T12 1x8 2-Lamp Industrial Strip Fixture with 60 Watt Lamps	123	0.738	1,535	6	Retrofit with (4) 12.5 Watt LED T8 4' Lamps and (1) 1x8 4-Lamp Industrial Strip Kit; Direct Wire to Socket	50	0.300	624
FORBES FOREST	MOUNT DAVIS MAINTENANCE HEADQUARTERS		INTERIOR		HIGHBAYS	6	T12 1x8 2-Lamp Industrial Strip Fixture with 60 Watt Lamps	123	0.738	1,535	6	Retrofit with (4) 12.5 Watt LED T8 4' Lamps and (1) 1x8 4-Lamp Industrial Strip Kit; Direct Wire to Socket	50	0.300	624
FORBES FOREST	MOUNT DAVIS MAINTENANCE HEADQUARTERS		INTERIOR		HIGHBAYS	5	100 Watt Incandescent A-Lamp Fixture	100	0.500	1,040	5	Re-Lamp with (1) 18 Watt LED A21	18	0.090	187
FORBES FOREST	MOUNT DAVIS MAINTENANCE HEADQUARTERS		INTERIOR		HIGHBAYS	1	T12 1x4 2-Lamp Strip Fixture	72	0.072	150	1	Retrofit with (2) 12.5 Watt LED T8 4' Lamps; Direct Wire to Socket	25	0.025	52
FORBES FOREST	MOUNT DAVIS MAINTENANCE HEADQUARTERS		INTERIOR		BATHROOM	1	T12 1x4 2-Lamp Vanity Fixture	72	0.072	38	1	Retrofit with (2) 12.5 Watt LED T8 4' Lamps; Direct Wire to Socket	25	0.025	13

©2013 Energy Systems Group, LLC

EXISTING FIXTURES												PROPOSED FIXTURE UPGRADE				
Park/Building Name	Building	Building #	Phase	Floor	Room Description	Qty	Description	Watts	kW	kWh	Qty	Description	Watts	kW	kWh
FORBES FOREST	MOUNT DAVIS MAINTENANCE HEADQUARTERS		INTERIOR		LOCKED OFFICE	1	T12 2x4 4-Lamp Troffer Fixture	144	0.144	300	1	Retrofit with (4) 12.5 Watt LED T8 4' Lamps; Direct Wire to Socket	50	0.050	104
FORBES FOREST	MOUNT DAVIS MAINTENANCE HEADQUARTERS		INTERIOR		BARN LIGHT	1	250 Watt Mercury Vapor Dusk to Dawn Fixture	291	0.291	1,275	1	New 26 Watt LED Dusk to Dawn Barnyard Fixture	26	0.026	114
FORBES FOREST	MOUNT DAVIS BUILDING 12		INTERIOR		BUILDING 12	9	100 Watt Incandescent A-Lamp Fixture	100	0.900	1,872	9	Re-Lamp with (1) 18 Watt LED A21	18	0.162	337
FORBES FOREST	MOUNT DAVIS BUILDING 12		EXTERIOR		EXTERIOR	1	90 Watt Incandescent PAR38 2-Lamp Fixture	180	0.180	788	1	Re-Lamp with (2) 17 Watt LED PAR38	34	0.034	149
FORBES FOREST	MOUNT DAVIS BUILDING 12		EXTERIOR		POLE LIGHTS	1	175 Watt Metal Halide Flood Fixture	213	0.213	933	1	New 52 Watt LED Flood Fixture	54	0.054	237
LAUREL HILL	CONCESSION STAND		INTERIOR		DECO FIXTURE	2	100 Watt Incandescent 4-Lamp Fixture	400	0.800	2,208	2	Re-Lamp with (4) 18 Watt LED A21	72	0.144	397
LAUREL HILL	CONCESSION STAND		INTERIOR		SHOE AREA	3	T5 1x4 4-Lamp Wrap Fixture	64	0.192	530	3	Retrofit with (4) 13 Watt LED T5 4' Lamps; Direct Wire to Socket	52	0.156	431
LAUREL HILL	CONCESSION STAND		INTERIOR		WATER SHED	1	T12 1x4 4-Lamp Wrap Fixture	144	0.144	397	1	Retrofit with (4) 12.5 Watt LED T8 4' Lamps; Direct Wire to Socket	50	0.050	138
LAUREL HILL	CONCESSION STAND		INTERIOR		MENS RESTROOM	1	T12 1x4 4-Lamp Wrap Fixture	144	0.144	397	1	Retrofit with (4) 12.5 Watt LED T8 4' Lamps; Direct Wire to Socket	50	0.050	138
LAUREL HILL	CONCESSION STAND		INTERIOR		WOMENS RESTROOM	1	T12 1x4 4-Lamp Wrap Fixture	144	0.144	397	1	Retrofit with (4) 12.5 Watt LED T8 4' Lamps; Direct Wire to Socket	50	0.050	138
LAUREL HILL	CONCESSION STAND		INTERIOR		WOMENS RESTROOM	1	T12 1x4 2-Lamp Wrap Fixture	72	0.072	199	1	Retrofit with (2) 12.5 Watt LED T8 4' Lamps; Direct Wire to Socket	25	0.025	69
LAUREL HILL	CONCESSION STAND		EXTERIOR		EXTERIOR	4	75 Watt Incandescent PAR38 2-Lamp	150	0.600	864	4	Re-Lamp with (2) 17 Watt LED PAR38	34	0.136	196
LAUREL HILL	WARMING HUT		INTERIOR		FRONT AREA	6	T8 1x4 4-Lamp Wrap Fixture	106	0.636	2,356	6	Retrofit with (4) 12.5 Watt LED T8 4' Lamps; Direct Wire to Socket	50	0.300	1,111
LAUREL HILL	WARMING HUT		INTERIOR		BATHROOM	1	T8 1x4 3-Lamp Wrap Fixture	84	0.084	311	1	Retrofit with (3) 12.5 Watt LED T8 4' Lamps; Direct Wire to Socket	37.5	0.038	139
LAUREL HILL	WARMING HUT		INTERIOR		SHOP	8	T8 1x4 4-Lamp Wrap Fixture	106	0.848	3,141	8	Retrofit with (4) 12.5 Watt LED T8 4' Lamps; Direct Wire to Socket	50	0.400	1,482
LAUREL HILL	WARMING HUT		INTERIOR		WATER ROOM	2	100 Watt Incandescent A-Lamp Fixture	100	0.200	741	2	Re-Lamp with (1) 18 Watt LED A21	18	0.036	133
LAUREL HILL	WARMING HUT		INTERIOR		X-RED	2	Incandescent Exit Sign; Combo Emergency Heads	50	0.100	876	2	New 3 watt LED Exit Sign with Emergency Combo Heads	3	0.006	53
LAUREL HILL	WARMING HUT		EXTERIOR		OUTSIDE	2	Existing LED Fixture; No Retrofit	10	0.020	29	2	No Retrofit	10	0.020	29
LAUREL HILL	WARMING HUT		EXTERIOR		OUTSIDE	2	Incandescent Exit Sign; Combo Emergency Heads	50	0.100	876	2	New 3 watt LED Exit Sign with Emergency Combo Heads	3	0.006	53
LAUREL HILL	WARMING HUT		EXTERIOR		OUTSIDE	2	250 Watt High Pressure Sodium Dusk to Dawn Fixture	300	0.600	864	2	New 26 Watt LED Dusk to Dawn Barnyard Fixture	26	0.052	75
LAUREL HILL	MAINTENANCE BUILDING		INTERIOR		BAY - MACHINE AREA	2	T12 1x4 2-Lamp Strip Fixture	72	0.144	375	2	Retrofit with (2) 12.5 Watt LED T8 4' Lamps; Direct Wire to Socket	25	0.050	130
LAUREL HILL	MAINTENANCE BUILDING		INTERIOR		BAY - MACHINE AREA	1	T12 1x8 2-Lamp Strip Fixture with 60 Watt Lamps	123	0.123	320	1	Retrofit with (4) 12.5 Watt LED T8 4' Lamps and (1) 1x8 4-Lamp Strip Kit; Direct Wire to Socket	50	0.050	130
LAUREL HILL	MAINTENANCE BUILDING		INTERIOR		BAY - MACHINE AREA	1	25 Watt Incandescent 2-Lamp Exit Sign	50	0.050	438	1	New 3 watt LED Exit Sign	3	0.003	26
LAUREL HILL	MAINTENANCE BUILDING		INTERIOR		BAY	7	T8 1x4 2-Lamp Vaportight Fixture	62	0.434	1,129	7	Retrofit with (2) 12.5 Watt LED T8 4' Lamps; Direct Wire to Socket	25	0.175	455
LAUREL HILL	MAINTENANCE BUILDING		INTERIOR		BAY	1	25 Watt Incandescent 2-Lamp Exit Sign	50	0.050	438	1	New 3 watt LED Exit Sign	3	0.003	26
LAUREL HILL	MAINTENANCE BUILDING		INTERIOR		HEAT ROOM	2	T12 2x4 4-Lamp Troffer Fixture	144	0.288	749	2	Retrofit with (4) 12.5 Watt LED T8 4' Lamps; Direct Wire to Socket	50	0.100	260

©2013 Energy Systems Group, LLC

EXISTING FIXTURES												PROPOSED FIXTURE UPGRADE				
Park/Building Name	Building	Building #	Phase	Floor	Room Description	Qty	Description	Watts	kW	kWh	Qty	Description	Watts	kW	kWh
LAUREL HILL	MAINTENANCE BUILDING		INTERIOR		HALLWAY	7	T8 2x2 3-Lamp Troffer Fixture	58	0.406	1,056	7	Retrofit with (3) 10 Watt LED T8 2' Lamps; Direct Wire to Socket	30	0.210	546
LAUREL HILL	MAINTENANCE BUILDING		INTERIOR		HALLWAY	2	25 Watt Incandescent 2-Lamp Exit Sign	50	0.100	876	2	New 3 watt LED Exit Sign	3	0.006	53
LAUREL HILL	MAINTENANCE BUILDING		INTERIOR		OFFICE	2	T12 2x4 4-Lamp Troffer Fixture	144	0.288	749	2	Retrofit with (4) 12.5 Watt LED T8 4' Lamps; Direct Wire to Socket	50	0.100	260
LAUREL HILL	MAINTENANCE BUILDING		INTERIOR		OFFICE	2	T8 2x2 3-Lamp Troffer Fixture	58	0.116	302	2	Retrofit with (3) 10 Watt LED T8 2' Lamps; Direct Wire to Socket	30	0.060	156
LAUREL HILL	MAINTENANCE BUILDING		INTERIOR		BATHROOMS	1	T8 2x4 4-Lamp Surface Mount Fixture	106	0.106	55	1	Retrofit with (4) 12.5 Watt LED T8 4' Lamps; Direct Wire to Socket	50	0.050	26
LAUREL HILL	MAINTENANCE BUILDING		INTERIOR		BATHROOMS	1	T8 2x4 4-Lamp Troffer Fixture	106	0.106	55	1	Retrofit with (4) 12.5 Watt LED T8 4' Lamps; Direct Wire to Socket	50	0.050	26
LAUREL HILL	MAINTENANCE BUILDING		INTERIOR		SHOWER	1	No Access; Area(s) Not Included in Scope/Pricing	0	0.000	0	1	No Retrofit	0	0.000	0
LAUREL HILL	MAINTENANCE BUILDING		INTERIOR		MAINTENANCE SHOP	9	T8 1x4 2-Lamp Vanity Fixture	62	0.558	1,451	9	Retrofit with (2) 12.5 Watt LED T8 4' Lamps; Direct Wire to Socket	25	0.225	585
LAUREL HILL	MAINTENANCE BUILDING		INTERIOR		BENCH LIGHT	2	T8 1x4 2-Lamp Vanity Fixture	62	0.124	323	2	Retrofit with (2) 12.5 Watt LED T8 4' Lamps; Direct Wire to Socket	25	0.050	130
LAUREL HILL	MAINTENANCE BUILDING		INTERIOR		MAIN AREA	7	T12 1x8 1-Lamp Industrial Fixture; Turret	83	0.581	1,511	7	New 1x8 2-Lamp Industrial Fixture with (2) 12.5 Watt LED T8 4' Lamps; Direct Wire to Socket	25	0.175	455
LAUREL HILL	MAINTENANCE BUILDING		INTERIOR		CHEMICAL STORAGE	1	100 Watt Incandescent A-Lamp Fixture	100	0.100	100	1	Re-Lamp with (1) 18 Watt LED A21	18	0.018	18
LAUREL HILL	MAINTENANCE BUILDING		EXTERIOR		OUTDOOR	1	75 Watt Incandescent PAR38 2-Lamp	150	0.150	657	1	Re-Lamp with (2) 17 Watt LED PAR38	34	0.034	149
LAUREL HILL	MAINTENANCE BUILDING		EXTERIOR		OUTDOOR	1	Incandescent Exit Sign; Combo Emergency Heads	50	0.050	438	1	New 3 watt LED Exit Sign with Emergency Combo Heads	3	0.003	26
LAUREL HILL	MAINTENANCE BUILDING		EXTERIOR		OUTDOOR	1	75 Watt Incandescent PAR30 Fixture	75	0.075	329	1	Re-Lamp with (1) 10 Watt LED PAR30	10	0.010	44
LAUREL HILL	MAINTENANCE BUILDING		EXTERIOR		POLE HEADS	3	400 Watt Mercury Vapor Shoebox Fixture	455	1.365	5,979	3	New 150 Watt LED Shoebox Fixture	155	0.465	2,037
LAUREL HILL	RESIDENT HOUSE		INTERIOR		RESIDENT HOUSE	3	30 Watt Incandescent A-Lamp Fixture	30	0.090	333	3	Re-Lamp with (1) 7 Watt LED A19	7	0.021	78
LAUREL HILL	RESIDENT HOUSE		INTERIOR		RESIDENT HOUSE	1	13 Watt Compact Fluorescent 5-Lamp Fixture	65	0.065	241	1	Re-Lamp with (5) 10 Watt LED A19	50	0.050	185
LAUREL HILL	RESIDENT HOUSE		INTERIOR		HALLWAY	1	60 Watt Incandescent A-Lamp Fixture	60	0.060	222	1	Re-Lamp with (1) 10 Watt LED A19	10	0.010	37
LAUREL HILL	RESIDENT HOUSE		INTERIOR		HALLWAY	1	60 Watt Incandescent A-Lamp Fixture	60	0.060	222	1	Re-Lamp with (1) 10 Watt LED A19	10	0.010	37
LAUREL HILL	RESIDENT HOUSE		INTERIOR		CLOSET	1	60 Watt Incandescent 3-Lamp Fixture	180	0.180	667	1	Re-Lamp with (3) 10 Watt LED A19	30	0.030	111
LAUREL HILL	RESIDENT HOUSE		INTERIOR		BATHROOM	1	60 Watt Incandescent A-Lamp Fixture	60	0.060	222	1	Re-Lamp with (1) 10 Watt LED A19	10	0.010	37
LAUREL HILL	RESIDENT HOUSE		INTERIOR		BATHROOM	1	13 Watt Compact Fluorescent 4-Lamp Fixture	52	0.052	193	1	Re-Lamp with (4) 10 Watt LED A19	40	0.040	148
LAUREL HILL	RESIDENT HOUSE		INTERIOR		BEDROOM	1	60 Watt Incandescent A-Lamp Fixture	60	0.060	222	1	Re-Lamp with (1) 10 Watt LED A19	10	0.010	37
LAUREL HILL	RESIDENT HOUSE		INTERIOR		DOWNSTAIRS	3	T12 2x4 4-Lamp Troffer Fixture	144	0.432	1,600	3	Retrofit with (4) 12.5 Watt LED T8 4' Lamps; Direct Wire to Socket	50	0.150	556
LAUREL HILL	RESIDENT HOUSE		INTERIOR		CLOSET	1	60 Watt Incandescent A-Lamp Fixture	60	0.060	222	1	Re-Lamp with (1) 10 Watt LED A19	10	0.010	37
LAUREL HILL	RESIDENT HOUSE		INTERIOR		HVAC ROOM	1	60 Watt Incandescent A-Lamp Fixture	60	0.060	222	1	Re-Lamp with (1) 10 Watt LED A19	10	0.010	37

©2013 Energy Systems Group, LLC

				EXISTING FIXTURES								PROPOSED FIXTURE UPGRADE				
Park/Building Name	Building	Building #	Phase	Floor	Room Description	Qty	Description	Watts	kW	kWh	Qty	Description	Watts	kW	kWh
LAUREL HILL	RESIDENT HOUSE		INTERIOR		BATHROOM	2	60 Watt Incandescent A-Lamp Fixture	60	0.120	444	2	Re-Lamp with (1) 10 Watt LED A19	10	0.020	74
LAUREL HILL	RESIDENT HOUSE		INTERIOR		BATHROOM	1	60 Watt Incandescent 2-Lamp Fixture	120	0.120	444	1	Re-Lamp with (2) 10 Watt LED A19	20	0.020	74
LAUREL HILL	RESIDENT HOUSE		INTERIOR		HALLWAY	2	60 Watt Incandescent A-Lamp Fixture	60	0.120	444	2	Re-Lamp with (1) 10 Watt LED A19	10	0.020	74
LAUREL HILL	RESIDENT HOUSE		INTERIOR		HVAC ROOM	1	T12 2x4 4-Lamp Surface Mount Fixture	144	0.144	533	1	Retrofit with (4) 12.5 Watt LED T8 4' Lamps; Direct Wire to Socket	50	0.050	185
LAUREL HILL	RESIDENT HOUSE		INTERIOR		CLOSET	1	60 Watt Incandescent A-Lamp Fixture	60	0.060	222	1	Re-Lamp with (1) 10 Watt LED A19	10	0.010	37
LAUREL HILL	RESIDENT HOUSE		INTERIOR		COACHLIGHT	2	13 Watt Compact Fluorescent Fixture	13	0.026	96	2	Re-Lamp with (1) 10 Watt LED A19	10	0.020	74
LAUREL HILL	RESIDENT HOUSE		INTERIOR		DOWNLIGHT	3	13 Watt Compact Fluorescent Downlight	13	0.039	144	3	Re-Lamp with (1) 10 Watt LED BR30	10	0.030	111
LAUREL HILL	RESIDENT HOUSE		EXTERIOR		OUTSIDE	1	75 Watt Incandescent PAR38 3-Lamp Fixture	225	0.225	986	1	Relamp with (3) 17 Watt LED PAR38	51	0.051	223
LAUREL HILL	RESIDENT HOUSE		EXTERIOR		SHED	1	100 Watt Incandescent A-Lamp Fixture	100	0.100	438	1	Re-Lamp with (1) 18 Watt LED A21	18	0.018	79
LAUREL HILL	RESIDENT HOUSE		EXTERIOR		SHED	1	250 Watt Mercury Vapor Dusk to Dawn Fixture	291	0.291	1,275	1	New 26 Watt LED Dusk to Dawn Barnyard Fixture	26	0.026	114
LAUREL HILL	OFFICE		INTERIOR		OPEN OFFICE	9	90 Watt Incandescent PAR38 Fixture	90	0.810	1,821	9	Re-Lamp with (1) 17 Watt LED PAR38	17	0.153	344
LAUREL HILL	OFFICE		INTERIOR		OPEN OFFICE	4	T12 2x4 4-Lamp Surface Mount Fixture	144	0.576	1,295	4	Retrofit with (4) 12.5 Watt LED T8 4' Lamps; Direct Wire to Socket	50	0.200	450
LAUREL HILL	OFFICE		INTERIOR		OFFICE	2	T12 2x4 4-Lamp Surface Mount Fixture	144	0.288	647	2	Retrofit with (4) 12.5 Watt LED T8 4' Lamps; Direct Wire to Socket	50	0.100	225
LAUREL HILL	OFFICE		INTERIOR		BATHROOM	1	T12 2x2 2-Lamp U-Lamp Troffer Fixture with 6" Lamps	72	0.072	38	1	Retrofit with (2) 10 Watt LED T8 2' Lamps and (1) 2x2 2-Lamp White Reflector Kit; Direct Wire to Socket	20	0.020	10
LAUREL HILL	OFFICE		INTERIOR		BATHROOM	1	T12 2x2 2-Lamp U-Lamp Troffer Fixture with 6" Lamps	72	0.072	38	1	Retrofit with (2) 10 Watt LED T8 2' Lamps and (1) 2x2 2-Lamp White Reflector Kit; Direct Wire to Socket	20	0.020	10
LAUREL HILL	OFFICE		INTERIOR		HVAC ROOM	2	T12 1x8 1-Lamp Industrial Fixture; Turret	83	0.166	166	2	New 1x8 2-Lamp Industrial Fixture with (2) 12.5 Watt LED T8 4' Lamps; Direct Wire to Socket	25	0.050	50
LAUREL HILL	OFFICE		INTERIOR		BACKROOM	2	T12 1x4 4-Lamp Wrap Fixture	144	0.288	647	2	Retrofit with (4) 12.5 Watt LED T8 4' Lamps; Direct Wire to Socket	50	0.100	225
LAUREL HILL	OFFICE		INTERIOR		HALLWAY	2	T12 2x2 2-Lamp U-Lamp Troffer Fixture with 6" Lamps	72	0.144	324	2	Retrofit with (2) 10 Watt LED T8 2' Lamps and (1) 2x2 2-Lamp White Reflector Kit; Direct Wire to Socket	20	0.040	90
LAUREL HILL	OFFICE		INTERIOR		HALLWAY	3	25 Watt Incandescent 2-Lamp Exit Sign	50	0.150	1,314	3	New 3 watt LED Exit Sign	3	0.009	79
LAUREL HILL	OFFICE		EXTERIOR		OUTSIDE	2	90 Watt Incandescent PAR38 Fixture	90	0.180	788	2	Re-Lamp with (1) 17 Watt LED PAR38	17	0.034	149
LAUREL HILL	OFFICE		EXTERIOR		OUTSIDE	5	90 Watt Incandescent PAR38 Fixture	90	0.450	1,971	5	Re-Lamp with (1) 17 Watt LED PAR38	17	0.085	372
LAUREL HILL	MENS ROOM		INTERIOR		MENS ROOM	3	50 Watt Metal Halide Wall Pack Fixture	72	0.216	989	3	Re-Lamp with (1) 19 Watt LED Omni-Cob Lamp; Hardwire Ballast	19	0.057	261
LAUREL HILL	MENS ROOM		INTERIOR		MENS ROOM	3	50 Watt Metal Halide Wall Pack Fixture	72	0.216	989	3	Re-Lamp with (1) 19 Watt LED Omni-Cob Lamp; Hardwire Ballast	19	0.057	261
LAUREL HILL	RENT PAVILION		INTERIOR		RENT PAVILION	3	50 Watt Metal Halide Wall Pack Fixture	72	0.216	800	3	Re-Lamp with (1) 19 Watt LED Omni-Cob Lamp; Hardwire Ballast	19	0.057	211
LAUREL HILL	STORAGE		INTERIOR		STORAGE	2	13 Watt Compact Fluorescent Fixture	13	0.026	26	2	Re-Lamp with (1) 10 Watt LED A19	10	0.020	20
LAUREL HILL	CHLORINE PLANT		INTERIOR		CHLORINE PLANT	2	T8 2x4 4-Lamp Troffer Fixture	106	0.212	551	2	Retrofit with (4) 12.5 Watt LED T8 4' Lamps; Direct Wire to Socket	50	0.100	260

©2013 Energy Systems Group, LLC

EXISTING FIXTURES												PROPOSED FIXTURE UPGRADE				
Park/Building Name	Building	Building #	Phase	Floor	Room Description	Qty	Description	Watts	kW	kWh	Qty	Description	Watts	kW	kWh
LAUREL HILL	CHLORINE PLANT		INTERIOR		CHLORINE PLANT	3	75 Watt Incandescent PAR30 Fixture	75	0.225	585	3	Re-Lamp with (1) 10 Watt LED PAR30	10	0.030	78
LAUREL HILL	WATER TREATMENT		INTERIOR		WATER TREATMENT	8	T8 2x4 4-Lamp Troffer Fixture	106	0.848	2,206	8	Retrofit with (4) 12.5 Watt LED T8 4' Lamps; Direct Wire to Socket	50	0.400	1,040
LAUREL HILL	WATER TREATMENT		INTERIOR		WATER TREATMENT	3	75 Watt Incandescent PAR30 Fixture	75	0.225	585	3	Re-Lamp with (1) 10 Watt LED PAR30	10	0.030	78
LAUREL HILL	WATER TREATMENT		INTERIOR		WATER TREATMENT	1	50 Watt Metal Halide Wall Pack Fixture	72	0.072	187	1	Re-Lamp with (1) 19 Watt LED Omni-Cob Lamp; Hardwire Ballast	19	0.019	49
LAUREL HILL	LIFT STATION		INTERIOR		LIFT STATION	4	T8 2x4 4-Lamp Troffer Fixture	106	0.424	1,103	4	Retrofit with (4) 12.5 Watt LED T8 4' Lamps; Direct Wire to Socket	50	0.200	520
LAUREL HILL	LIFT STATION		INTERIOR		LIFT STATION	1	60 Watt Incandescent A-Lamp Fixture	60	0.060	156	1	Re-Lamp with (1) 10 Watt LED A19	10	0.010	26
LAUREL HILL	DOWNSTAIRS		INTERIOR		DOWNSTAIRS	2	100 Watt Metal Halide Fixture	125	0.250	650	2	Re-Lamp with (1) 27 Watt LED Omni-Cob Lamp; Hardwire Ballast	27	0.054	140
LAUREL HILL	DOWNSTAIRS		INTERIOR		DOWNSTAIRS	3	90 Watt Incandescent PAR38 Fixture	90	0.270	702	3	Re-Lamp with (1) 17 Watt LED PAR38	17	0.051	133
LAUREL HILL	DOWNSTAIRS		INTERIOR		DOWNSTAIRS	1	60 Watt Incandescent A-Lamp Fixture	60	0.060	156	1	Re-Lamp with (1) 10 Watt LED A19	10	0.010	26
KOOSER	MANAGER RESIDENCE		INTERIOR		OPEN AREA	8	65 Watt Incandescent R30 Downlight Fixture	65	0.520	1,926	8	Re-Lamp with (1) 10 Watt LED BR30	10	0.080	296
KOOSER	MANAGER RESIDENCE		INTERIOR		STOVE	1	50 Watt Incandescent MR16 Fixture	50	0.050	185	1	Re-Lamp with (1) 7 Watt LED MR16	7	0.007	26
KOOSER	MANAGER RESIDENCE		INTERIOR		SIDE AREA	2	13 Watt Compact Fluorescent 2-Lamp Fixture	26	0.052	193	2	Re-Lamp with (2) 10 Watt LED A19	20	0.040	148
KOOSER	MANAGER RESIDENCE		INTERIOR		BEDROOM	5	40 Watt Incandescent Candelabra Fixture	40	0.200	741	5	Re-Lamp with (1) 5 Watt LED Candelabra	5	0.025	93
KOOSER	MANAGER RESIDENCE		INTERIOR		BEDROOM	1	60 Watt Incandescent A-Lamp Fixture	60	0.060	222	1	Re-Lamp with (1) 10 Watt LED A19	10	0.010	37
KOOSER	MANAGER RESIDENCE		INTERIOR		BEDROOM	9	60 Watt Incandescent A-Lamp Fixture	60	0.540	2,000	9	Re-Lamp with (1) 10 Watt LED A19	10	0.090	333
KOOSER	MANAGER RESIDENCE		INTERIOR		BEDROOM	6	65 Watt Incandescent R30 Downlight Fixture	65	0.390	1,445	6	Re-Lamp with (1) 10 Watt LED BR30	10	0.060	222
KOOSER	MANAGER RESIDENCE		INTERIOR		RESTROOM	1	13 Watt Compact Fluorescent 4-Lamp Fixture	52	0.052	193	1	Re-Lamp with (4) 10 Watt LED A19	40	0.040	148
KOOSER	MANAGER RESIDENCE		INTERIOR		RESTROOM	1	13 Watt Compact Fluorescent 2-Lamp Fixture	26	0.026	96	1	Re-Lamp with (2) 10 Watt LED A19	20	0.020	74
KOOSER	MANAGER RESIDENCE		INTERIOR		CLOSET	1	13 Watt Compact Fluorescent Fixture	13	0.013	48	1	Re-Lamp with (1) 10 Watt LED A19	10	0.010	37
KOOSER	MANAGER RESIDENCE		INTERIOR		KITCHEN	9	65 Watt Incandescent R30 Downlight Fixture	65	0.585	2,167	9	Re-Lamp with (1) 10 Watt LED BR30	10	0.090	333
KOOSER	MANAGER RESIDENCE		INTERIOR		HVAC ROOM	1	T12 2x4 2-Lamp Troffer Fixture	78	0.078	289	1	Retrofit with (2) 12.5 Watt LED T8 4' Lamps; Direct Wire to Socket	25	0.025	93
KOOSER	MANAGER RESIDENCE		INTERIOR		RESTROOM	1	20 Watt Incandescent G-Lamp Globe Fixture	120	0.120	444	1	Relamp with (6) 8 Watt LED G25	48	0.048	178
KOOSER	MANAGER RESIDENCE		INTERIOR		RESTROOM	1	60 Watt Incandescent A-Lamp Fixture	60	0.060	222	1	Re-Lamp with (1) 10 Watt LED A19	10	0.010	37
KOOSER	MANAGER RESIDENCE		INTERIOR		BEDROOM	1	13 Watt Compact Fluorescent Fixture	13	0.013	48	1	Re-Lamp with (1) 10 Watt LED A19	10	0.010	37
KOOSER	MANAGER RESIDENCE		INTERIOR		BEDROOM	1	13 Watt Compact Fluorescent Fixture	13	0.013	48	1	Re-Lamp with (1) 10 Watt LED A19	10	0.010	37
KOOSER	MANAGER RESIDENCE		INTERIOR		FRONT AREA	1	T8 1x4 2-Lamp Strip Fixture	62	0.062	230	1	Retrofit with (2) 12.5 Watt LED T8 4' Lamps; Direct Wire to Socket	25	0.025	93

©2013 Energy Systems Group, LLC

EXISTING FIXTURES											PROPOSED FIXTURE UPGRADE				
Park/Building Name	Building	Building #	Phase	Floor	Room Description	Qty	Description	Watts	kW	kWh	Qty	Description	Watts	kW	kWh
KOOSER	MANAGER RESIDENCE		INTERIOR		FRONT AREA	1	60 Watt Incandescent A-Lamp Fixture	60	0.060	222	1	Re-Lamp with (1) 10 Watt LED A19	10	0.010	37
KOOSER	MANAGER RESIDENCE		EXTERIOR		OUTSIDE	6	60 Watt Incandescent A-Lamp Fixture	60	0.360	1,577	6	Re-Lamp with (1) 10 Watt LED A19	10	0.060	263
KOOSER	MANAGER RESIDENCE		EXTERIOR		OUTSIDE	3	75 Watt Incandescent PAR30 Fixture	75	0.225	986	3	Re-Lamp with (1) 10 Watt LED PAR30	10	0.030	131
KOOSER	MANAGER RESIDENCE		EXTERIOR		OUTSIDE	1	150 Watt Quartz Flood Fixture	150	0.150	657	1	New 26 Watt LED Flood Fixture	27	0.027	118
KOOSER	CABIN	21	INTERIOR		BEDROOM	1	60 Watt Incandescent 6-Lamp Candelabra	360	0.360	1,333	1	Relamp with (6) 5 Watt LED Candelabra Lamps	30	0.030	111
KOOSER	CABIN	21	INTERIOR		BEDROOM	1	60 Watt Incandescent A-Lamp Fixture	60	0.060	222	1	Re-Lamp with (1) 10 Watt LED A19	10	0.010	37
KOOSER	CABIN	21	INTERIOR		BEDROOM	1	60 Watt Incandescent 6-Lamp Candelabra	360	0.360	1,333	1	Relamp with (6) 5 Watt LED Candelabra Lamps	30	0.030	111
KOOSER	CABIN	21	INTERIOR		BEDROOM	1	60 Watt Incandescent A-Lamp Fixture	60	0.060	222	1	Re-Lamp with (1) 10 Watt LED A19	10	0.010	37
KOOSER	CABIN	21	INTERIOR		BEDROOM	1	60 Watt Incandescent 6-Lamp Candelabra	360	0.360	1,333	1	Relamp with (6) 5 Watt LED Candelabra Lamps	30	0.030	111
KOOSER	CABIN	21	INTERIOR		BEDROOM	1	60 Watt Incandescent A-Lamp Fixture	60	0.060	222	1	Re-Lamp with (1) 10 Watt LED A19	10	0.010	37
KOOSER	CABIN	21	INTERIOR		OPEN AREA	1	60 Watt Incandescent 5-Lamp Candelabra	300	0.300	1,111	1	Re-Lamp with (5) 5 Watt LED Candelabra	25	0.025	93
KOOSER	CABIN	21	EXTERIOR		BUG LIGHT	1	60 Watt Incandescent A-Lamp Fixture	60	0.060	263	1	Re-Lamp with (1) 10 Watt LED A19	10	0.010	44
KOOSER	CABIN	26	INTERIOR		BEDROOM	1	60 Watt Incandescent 6-Lamp Candelabra	360	0.360	1,333	1	Relamp with (6) 5 Watt LED Candelabra Lamps	30	0.030	111
KOOSER	CABIN	26	INTERIOR		BEDROOM	1	60 Watt Incandescent A-Lamp Fixture	60	0.060	222	1	Re-Lamp with (1) 10 Watt LED A19	10	0.010	37
KOOSER	CABIN	26	INTERIOR		BEDROOM	1	60 Watt Incandescent 6-Lamp Candelabra	360	0.360	1,333	1	Relamp with (6) 5 Watt LED Candelabra Lamps	30	0.030	111
KOOSER	CABIN	26	INTERIOR		BEDROOM	1	60 Watt Incandescent A-Lamp Fixture	60	0.060	222	1	Re-Lamp with (1) 10 Watt LED A19	10	0.010	37
KOOSER	CABIN	26	INTERIOR		BEDROOM	1	60 Watt Incandescent 6-Lamp Candelabra	360	0.360	1,333	1	Relamp with (6) 5 Watt LED Candelabra Lamps	30	0.030	111
KOOSER	CABIN	26	INTERIOR		BEDROOM	1	60 Watt Incandescent A-Lamp Fixture	60	0.060	222	1	Re-Lamp with (1) 10 Watt LED A19	10	0.010	37
KOOSER	CABIN	26	INTERIOR		BEDROOM	1	60 Watt Incandescent 6-Lamp Candelabra	360	0.360	1,333	1	Relamp with (6) 5 Watt LED Candelabra Lamps	30	0.030	111
KOOSER	CABIN	26	INTERIOR		BEDROOM	1	60 Watt Incandescent A-Lamp Fixture	60	0.060	222	1	Re-Lamp with (1) 10 Watt LED A19	10	0.010	37
KOOSER	CABIN	26	INTERIOR		BEDROOM	1	60 Watt Incandescent 6-Lamp Candelabra	360	0.360	1,333	1	Relamp with (6) 5 Watt LED Candelabra Lamps	30	0.030	111
KOOSER	CABIN	26	INTERIOR		BEDROOM	1	60 Watt Incandescent A-Lamp Fixture	60	0.060	222	1	Re-Lamp with (1) 10 Watt LED A19	10	0.010	37
KOOSER	CABIN	26	INTERIOR		OPEN AREA	1	60 Watt Incandescent 5-Lamp Candelabra	300	0.300	1,111	1	Re-Lamp with (5) 5 Watt LED Candelabra	25	0.025	93
KOOSER	CABIN	26	EXTERIOR		BUG LIGHT	1	60 Watt Incandescent A-Lamp Fixture	60	0.060	263	1	Re-Lamp with (1) 10 Watt LED A19	10	0.010	44
KOOSER	CABIN	27	INTERIOR		BEDROOM	1	60 Watt Incandescent 6-Lamp Candelabra	360	0.360	1,333	1	Relamp with (6) 5 Watt LED Candelabra Lamps	30	0.030	111
KOOSER	CABIN	27	INTERIOR		BEDROOM	1	60 Watt Incandescent A-Lamp Fixture	60	0.060	222	1	Re-Lamp with (1) 10 Watt LED A19	10	0.010	37
KOOSER	CABIN	27	INTERIOR		BEDROOM	1	60 Watt Incandescent 6-Lamp Candelabra	360	0.360	1,333	1	Relamp with (6) 5 Watt LED Candelabra Lamps	30	0.030	111
KOOSER	CABIN	27	INTERIOR		BEDROOM	1	60 Watt Incandescent A-Lamp Fixture	60	0.060	222	1	Re-Lamp with (1) 10 Watt LED A19	10	0.010	37
KOOSER	CABIN	27	INTERIOR		BEDROOM	1	60 Watt Incandescent 6-Lamp Candelabra	360	0.360	1,333	1	Relamp with (6) 5 Watt LED Candelabra Lamps	30	0.030	111
KOOSER	CABIN	27	INTERIOR		BEDROOM	1	60 Watt Incandescent A-Lamp Fixture	60	0.060	222	1	Re-Lamp with (1) 10 Watt LED A19	10	0.010	37

©2013 Energy Systems Group, LLC

EXISTING FIXTURES												PROPOSED FIXTURE UPGRADE				
Park/Building Name	Building	Building #	Phase	Floor	Room Description	Qty	Description	Watts	kW	kWh	Qty	Description	Watts	kW	kWh
KOOSER	CABIN	27	INTERIOR		OPEN AREA	1	60 Watt Incandescent 5-Lamp Candelabra	300	0.300	1,111	1	Re-Lamp with (5) 5 Watt LED Candelabra	25	0.025	93
KOOSER	CABIN	27	EXTERIOR		BUG LIGHT	1	60 Watt Incandescent A-Lamp Fixture	60	0.060	263	1	Re-Lamp with (1) 10 Watt LED A19	10	0.010	44
KOOSER	CABIN	29	INTERIOR		BEDROOM	1	60 Watt Incandescent 6-Lamp Candelabra	360	0.360	1,333	1	Relamp with (6) 5 Watt LED Candelabra Lamps	30	0.030	111
KOOSER	CABIN	29	INTERIOR		BEDROOM	1	60 Watt Incandescent A-Lamp Fixture	60	0.060	222	1	Re-Lamp with (1) 10 Watt LED A19	10	0.010	37
KOOSER	CABIN	29	INTERIOR		BEDROOM	1	60 Watt Incandescent 6-Lamp Candelabra	360	0.360	1,333	1	Relamp with (6) 5 Watt LED Candelabra Lamps	30	0.030	111
KOOSER	CABIN	29	INTERIOR		BEDROOM	1	60 Watt Incandescent A-Lamp Fixture	60	0.060	222	1	Re-Lamp with (1) 10 Watt LED A19	10	0.010	37
KOOSER	CABIN	29	INTERIOR		BEDROOM	1	60 Watt Incandescent 6-Lamp Candelabra	360	0.360	1,333	1	Relamp with (6) 5 Watt LED Candelabra Lamps	30	0.030	111
KOOSER	CABIN	29	INTERIOR		BEDROOM	1	60 Watt Incandescent A-Lamp Fixture	60	0.060	222	1	Re-Lamp with (1) 10 Watt LED A19	10	0.010	37
KOOSER	CABIN	29	INTERIOR		OPEN AREA	1	60 Watt Incandescent 5-Lamp Candelabra	300	0.300	1,111	1	Re-Lamp with (5) 5 Watt LED Candelabra	25	0.025	93
KOOSER	CABIN	29	EXTERIOR		BUG LIGHT	1	60 Watt Incandescent A-Lamp Fixture	60	0.060	263	1	Re-Lamp with (1) 10 Watt LED A19	10	0.010	44
KOOSER	CABIN	22	INTERIOR		BEDROOM	1	60 Watt Incandescent A-Lamp Fixture	60	0.060	222	1	Re-Lamp with (1) 10 Watt LED A19	10	0.010	37
KOOSER	CABIN	22	INTERIOR		BEDROOM	1	13 Watt Compact Fluorescent Fixture	13	0.013	48	1	Re-Lamp with (1) 10 Watt LED A19	10	0.010	37
KOOSER	CABIN	22	INTERIOR		KITCHEN	2	60 Watt Incandescent A-Lamp Fixture	60	0.120	444	2	Re-Lamp with (1) 10 Watt LED A19	10	0.020	74
KOOSER	CABIN	22	INTERIOR		LOFT	1	60 Watt Incandescent A-Lamp Fixture	60	0.060	222	1	Re-Lamp with (1) 10 Watt LED A19	10	0.010	37
KOOSER	CABIN	22	EXTERIOR		OUTSIDE	1	60 Watt Incandescent A-Lamp Fixture	60	0.060	263	1	Re-Lamp with (1) 10 Watt LED A19	10	0.010	44
KOOSER	CABIN	24	INTERIOR		BEDROOM	1	60 Watt Incandescent A-Lamp Fixture	60	0.060	222	1	Re-Lamp with (1) 10 Watt LED A19	10	0.010	37
KOOSER	CABIN	24	INTERIOR		BEDROOM	1	13 Watt Compact Fluorescent Fixture	13	0.013	48	1	Re-Lamp with (1) 10 Watt LED A19	10	0.010	37
KOOSER	CABIN	24	INTERIOR		KITCHEN	2	60 Watt Incandescent A-Lamp Fixture	60	0.120	444	2	Re-Lamp with (1) 10 Watt LED A19	10	0.020	74
KOOSER	CABIN	24	INTERIOR		LOFT	1	60 Watt Incandescent A-Lamp Fixture	60	0.060	222	1	Re-Lamp with (1) 10 Watt LED A19	10	0.010	37
KOOSER	CABIN	24	EXTERIOR		OUTSIDE	1	60 Watt Incandescent A-Lamp Fixture	60	0.060	263	1	Re-Lamp with (1) 10 Watt LED A19	10	0.010	44
KOOSER	CABIN	25	INTERIOR		BEDROOM	1	60 Watt Incandescent A-Lamp Fixture	60	0.060	222	1	Re-Lamp with (1) 10 Watt LED A19	10	0.010	37
KOOSER	CABIN	25	INTERIOR		BEDROOM	1	13 Watt Compact Fluorescent Fixture	13	0.013	48	1	Re-Lamp with (1) 10 Watt LED A19	10	0.010	37
KOOSER	CABIN	25	INTERIOR		KITCHEN	2	60 Watt Incandescent A-Lamp Fixture	60	0.120	444	2	Re-Lamp with (1) 10 Watt LED A19	10	0.020	74
KOOSER	CABIN	25	INTERIOR		LOFT	1	60 Watt Incandescent A-Lamp Fixture	60	0.060	222	1	Re-Lamp with (1) 10 Watt LED A19	10	0.010	37
KOOSER	CABIN	25	EXTERIOR		OUTSIDE	1	60 Watt Incandescent A-Lamp Fixture	60	0.060	263	1	Re-Lamp with (1) 10 Watt LED A19	10	0.010	44
KOOSER	SHOWERHOUSE		INTERIOR		SHOWER HOUSE	2	T8 1x4 2-Lamp Wrap Fixture	62	0.124	568	2	Retrofit with (2) 12.5 Watt LED T8 4' Lamps; Direct Wire to Socket	25	0.050	229

©2013 Energy Systems Group, LLC



EXISTING FIXTURES											PROPOSED FIXTURE UPGRADE				
Park/Building Name	Building	Building #	Phase	Floor	Room Description	Qty	Description	Watts	kW	kWh	Qty	Description	Watts	kW	kWh
KOOSER	SHOWERHOUSE		INTERIOR		SHOWER HOUSE	2	T12 1x4 3-Lamp Wrap Fixture	126	0.252	1,154	2	Retrofit with (3) 12.5 Watt LED T8 4' Lamps; Direct Wire to Socket	37.5	0.075	344
KOOSER	SHOWERHOUSE		INTERIOR		SHOWER HOUSE	1	T12 1x4 2-Lamp Wrap Fixture	72	0.072	330	1	Retrofit with (2) 12.5 Watt LED T8 4' Lamps; Direct Wire to Socket	25	0.025	115
KOOSER	SHOWERHOUSE		INTERIOR		SHOWER HOUSE	1	32 Watt Plug-In CFL 2-Lamp Canopy Fixture	70	0.070	321	1	No Retrofit	70	0.070	321
KOOSER	SHOWERHOUSE		INTERIOR		SHOWER HOUSE	3	25 Watt Incandescent 2-Lamp Exit Sign	50	0.150	1,314	3	New 3 watt LED Exit Sign	3	0.009	79
KOOSER	SHOWERHOUSE		INTERIOR		SHOWER HOUSE	4	Incandescent Exit Sign; Combo Emergency Heads	50	0.200	1,752	4	New 3 watt LED Exit Sign with Emergency Combo Heads	3	0.012	105
KOOSER	SHOWERHOUSE		INTERIOR		BOILER ROOM	1	T8 1x4 3-Lamp Wrap Fixture	84	0.084	385	1	Retrofit with (3) 12.5 Watt LED T8 4' Lamps; Direct Wire to Socket	37.5	0.038	172
KOOSER	SHOWERHOUSE		INTERIOR		PIPECHASE	3	T8 1x4 2-Lamp Wrap Fixture	62	0.186	852	3	Retrofit with (2) 12.5 Watt LED T8 4' Lamps; Direct Wire to Socket	25	0.075	344
KOOSER	SHOWERHOUSE		EXTERIOR		EXTERIOR	6	50 Watt Metal Halide Wall Pack Fixture	72	0.432	1,979	6	New 24 Watt LED Wall Pack Fixture; Non-Dark Sky	25	0.150	687
KOOSER	SHOWERHOUSE		INTERIOR		LAUNDRY	2	T8 1x4 3-Lamp Wrap Fixture	84	0.168	770	2	Retrofit with (3) 12.5 Watt LED T8 4' Lamps; Direct Wire to Socket	37.5	0.075	344
KOOSER	SHOWERHOUSE		INTERIOR		MENS ROOM	5	T8 1x4 2-Lamp Wrap Fixture	62	0.310	1,420	5	Retrofit with (2) 12.5 Watt LED T8 4' Lamps; Direct Wire to Socket	25	0.125	573
KOOSER	SHOWERHOUSE		INTERIOR		CANOPY	3	32 Watt Plug-In CFL 2-Lamp Canopy Fixture	70	0.210	962	3	No Retrofit	70	0.210	962
KOOSER	SHOWERHOUSE		INTERIOR		MENS ROOM	5	T8 1x4 2-Lamp Wrap Fixture	62	0.310	1,420	5	Retrofit with (2) 12.5 Watt LED T8 4' Lamps; Direct Wire to Socket	25	0.125	573
KOOSER	SHOWERHOUSE		INTERIOR		CANOPY	3	32 Watt Plug-In CFL 2-Lamp Canopy Fixture	70	0.210	962	3	No Retrofit	70	0.210	962
KOOSER	SHOWERHOUSE		INTERIOR		SHOWER HOUSE	2	25 Watt Incandescent 2-Lamp Exit Sign	50	0.100	876	2	New 3 watt LED Exit Sign	3	0.006	53
KOOSER	SHOWERHOUSE		INTERIOR		SHOWER HOUSE	5	Incandescent Exit Sign; Combo Emergency Heads	50	0.250	2,190	5	New 3 watt LED Exit Sign with Emergency Combo Heads	3	0.015	131
KOOSER	CABIN	28	INTERIOR		BEDROOM	5	100 Watt Incandescent 2-Lamp A-Lamp	200	1.000	3,704	5	Re-Lamp with (2) 18 Watt LED A21	36	0.180	667
KOOSER	CABIN	28	INTERIOR		BEDROOM	2	Existing LED Fixture; No Retrofit	10	0.020	74	2	No Retrofit	10	0.020	74
KOOSER	CABIN	28	INTERIOR		BEDROOM	2	Existing LED Fixture; No Retrofit	10	0.020	74	2	No Retrofit	10	0.020	74
KOOSER	CABIN	28	INTERIOR		LAMP	1	60 Watt Incandescent A-Lamp Fixture	60	0.060	222	1	Re-Lamp with (1) 10 Watt LED A19	10	0.010	37
KOOSER	CABIN	28	EXTERIOR		BUG LIGHT	1	60 Watt Incandescent A-Lamp Fixture	60	0.060	263	1	Re-Lamp with (1) 10 Watt LED A19	10	0.010	44
KOOSER	MAINTENANCE BUILDING		INTERIOR		MAINTENANCE	12	T12 1x4 2-Lamp Industrial Strip Fixture	72	0.864	1,942	12	Retrofit with (2) 12.5 Watt LED T8 4' Lamps; Direct Wire to Socket	25	0.300	674
KOOSER	MAINTENANCE BUILDING		INTERIOR		HVAC	1	T12 1x4 2-Lamp Industrial Strip Fixture	72	0.072	162	1	Retrofit with (2) 12.5 Watt LED T8 4' Lamps; Direct Wire to Socket	25	0.025	56
KOOSER	MAINTENANCE BUILDING		EXTERIOR		OUTSIDE	2	60 Watt Incandescent A-Lamp Jelly Jar Fixture	60	0.120	526	2	Re-Lamp with (1) 10 Watt LED A19	10	0.020	88
KOOSER	MAINTENANCE BUILDING		EXTERIOR		OUTSIDE	1	150 Watt Metal Halide Dusk to Dawn Fixture	180	0.180	788	1	New 26 Watt LED Dusk to Dawn Barnyard Fixture	26	0.026	114
KOOSER	MAINTENANCE BUILDING		EXTERIOR		OUTSIDE	1	250 Watt Mercury Vapor Dusk to Dawn Fixture	291	0.291	1,275	1	New 26 Watt LED Dusk to Dawn Barnyard Fixture	26	0.026	114
KOOSER	MAINTENANCE BUILDING		INTERIOR		GENERATOR BUILDING	2	100 Watt Incandescent A-Lamp Fixture	100	0.200	450	2	Re-Lamp with (1) 18 Watt LED A21	18	0.036	81

©2013 Energy Systems Group, LLC

EXISTING FIXTURES												PROPOSED FIXTURE UPGRADE				
Park/Building Name	Building	Building #	Phase	Floor	Room Description	Qty	Description	Watts	kW	kWh	Qty	Description	Watts	kW	kWh
KOOSER	PARK OFFICE		INTERIOR		OFFICE	15	Existing LED Fixture; No Retrofit	40	0.600	1,349	15	No Retrofit	40	0.600	1,349
KOOSER	PARK OFFICE		EXTERIOR		OUTSIDE	1	60 Watt Incandescent Canopy Fixture	60	0.060	263	1	New 10 Watt LED Canopy Fixture	12	0.012	53
KOOSER	PARK OFFICE		INTERIOR		RESTROOM	1	60 Watt Incandescent A-Lamp Fixture	60	0.060	135	1	Re-Lamp with (1) 10 Watt LED A19	10	0.010	22
KOOSER	PARK OFFICE		INTERIOR		RESTROOM	2	65 Watt Incandescent PAR30 Fixture	65	0.130	292	2	Re-Lamp with (1) 10 Watt LED PAR30	10	0.020	45
KOOSER	PARK OFFICE		EXTERIOR		FLOOD	1	250 Watt Metal Halide Flood Fixture	295	0.295	1,292	1	New 125 Watt LED Flood Fixture	133	0.133	583
KOOSER	PARK OFFICE		EXTERIOR		COACHLIGHT	1	Existing LED Fixture; No Retrofit	10	0.010	44	1	No Retrofit	10	0.010	44
KOOSER	PARK OFFICE		INTERIOR		SHED	14	60 Watt Incandescent A-Lamp Fixture	60	0.840	1,888	14	Re-Lamp with (1) 10 Watt LED A19	10	0.140	315
KOOSER	BATH HOUSE		INTERIOR		BATH HOUSE	1	T8 1x4 3-Lamp Vaportight Fixture	84	0.084	385	1	Retrofit with (3) 12.5 Watt LED T8 4' Lamps; Direct Wire to Socket	37.5	0.038	172
KOOSER	BATH HOUSE		INTERIOR		BATH HOUSE	4	32 Watt Plug-In CFL 2-Lamp Fixture	70	0.280	1,283	4	No Retrofit	70	0.280	1,283
KOOSER	BATH HOUSE		INTERIOR		BATH HOUSE	2	T8 1x4 2-Lamp Vaportight Fixture	62	0.124	568	2	Retrofit with (2) 12.5 Watt LED T8 4' Lamps; Direct Wire to Socket	25	0.050	229
KOOSER	BATH HOUSE		INTERIOR		BATH HOUSE	1	T8 1x4 3-Lamp Vaportight Fixture	84	0.084	385	1	Retrofit with (3) 12.5 Watt LED T8 4' Lamps; Direct Wire to Socket	37.5	0.038	172
KOOSER	BATH HOUSE		INTERIOR		BATH HOUSE	1	T8 1x4 3-Lamp Vaportight Fixture	84	0.084	385	1	Retrofit with (3) 12.5 Watt LED T8 4' Lamps; Direct Wire to Socket	37.5	0.038	172
KOOSER	BATH HOUSE		INTERIOR		BATH HOUSE	2	25 Watt Incandescent 2-Lamp Exit Sign	50	0.100	876	2	New 3 watt LED Exit Sign	3	0.006	53
KOOSER	BATH HOUSE		INTERIOR		BATH HOUSE	1	Incandescent Exit Sign; Combo Emergency Heads	50	0.050	438	1	New 3 watt LED Exit Sign with Emergency Combo Heads	3	0.003	26
KOOSER	BATH HOUSE		INTERIOR		BATH HOUSE	2	Incandescent Exit Sign; Combo Emergency Heads	50	0.100	876	2	New 3 watt LED Exit Sign with Emergency Combo Heads	3	0.006	53
KOOSER	BATH HOUSE		INTERIOR		PIPECHASE	2	T8 2x4 3-Lamp Troffer Fixture	84	0.168	770	2	Retrofit with (3) 12.5 Watt LED T8 4' Lamps; Direct Wire to Socket	37.5	0.075	344
KOOSER	BATH HOUSE		INTERIOR		CANOPY	1	13 Watt Compact Fluorescent Fixture	13	0.013	60	1	Re-Lamp with (1) 10 Watt LED A19	10	0.010	46
KOOSER	BATH HOUSE		EXTERIOR		MIGHTY OAK	6	32 Watt Plug-In CFL 2-Lamp Fixture	70	0.420	1,840	6	No Retrofit	70	0.420	1,840
LAUREL HILL	COPPER KETTLE LODGE		INTERIOR		LODGE	2	100 Watt Incandescent 6-Lamp A-Lamp Fixture	600	1.200	4,445	2	Relamp with (6) 18 Watt LED A21	90	0.180	667
LAUREL HILL	COPPER KETTLE LODGE		INTERIOR		HALLWAY	3	T8 2x2 2-Lamp Troffer Fixture	36	0.108	400	3	Retrofit with (2) 10 Watt LED T8 2' Lamps; Direct Wire to Socket	20	0.060	222
LAUREL HILL	COPPER KETTLE LODGE		INTERIOR		KITCHEN	1	13 Watt Compact Fluorescent 2-Lamp Fixture	26	0.026	96	1	Re-Lamp with (2) 10 Watt LED A19	20	0.020	74
LAUREL HILL	COPPER KETTLE LODGE		INTERIOR		KITCHEN	1	T8 2x4 2-Lamp Troffer Fixture	62	0.062	230	1	Retrofit with (2) 12.5 Watt LED T8 4' Lamps; Direct Wire to Socket	25	0.025	93
LAUREL HILL	COPPER KETTLE LODGE		INTERIOR		KITCHEN	1	65 Watt Incandescent R30 Downlight Fixture	65	0.065	241	1	Re-Lamp with (1) 10 Watt LED BR30	10	0.010	37
LAUREL HILL	COPPER KETTLE LODGE		INTERIOR		LIVING ROOM	1	Existing LED Fixture; No Retrofit	40	0.040	148	1	No Retrofit	40	0.040	148
LAUREL HILL	COPPER KETTLE LODGE		INTERIOR		HALLWAY	1	13 Watt Compact Fluorescent 2-Lamp Fixture	26	0.026	96	1	Re-Lamp with (2) 10 Watt LED A19	20	0.020	74
LAUREL HILL	COPPER KETTLE LODGE		INTERIOR		BEDROOM	1	100 Watt Incandescent A-Lamp Fixture	100	0.100	370	1	Re-Lamp with (1) 18 Watt LED A21	18	0.018	67

©2013 Energy Systems Group, LLC

EXISTING FIXTURES											PROPOSED FIXTURE UPGRADE				
Park/Building Name	Building	Building #	Phase	Floor	Room Description	Qty	Description	Watts	kW	kWh	Qty	Description	Watts	kW	kWh
LAUREL HILL	COPPER KETTLE LODGE		INTERIOR		BEDROOM	1	13 Watt Compact Fluorescent 2-Lamp Fixture	26	0.026	96	1	Re-Lamp with (2) 10 Watt LED A19	20	0.020	74
LAUREL HILL	COPPER KETTLE LODGE		INTERIOR		DOWNSTAIRS	3	Existing LED Fixture; No Retrofit	10	0.030	111	3	No Retrofit	10	0.030	111
LAUREL HILL	COPPER KETTLE LODGE		INTERIOR		DOWNSTAIRS	6	Existing LED Fixture; No Retrofit	40	0.240	889	6	No Retrofit	40	0.240	889
LAUREL HILL	COPPER KETTLE LODGE		INTERIOR		WOOD AREA	1	60 Watt Incandescent A-Lamp Fixture	60	0.060	222	1	Re-Lamp with (1) 10 Watt LED A19	10	0.010	37
LAUREL HILL	COPPER KETTLE LODGE		INTERIOR		POST OUTSIDE	1	100 Watt Incandescent A-Lamp Fixture	100	0.100	438	1	Re-Lamp with (1) 18 Watt LED A21	18	0.018	79
LAUREL HILL	COPPER KETTLE LODGE		INTERIOR		COACHLIGHT	3	40 Watt Incandescent 2-Lamp Candelabra Fixture	80	0.240	1,051	3	Re-Lamp with (2) 5 Watt LED Candelabra	10	0.030	131
LAUREL HILL	COPPER KETTLE LODGE		INTERIOR		GARAGE	2	T12 1x4 2-Lamp Strip Fixture	72	0.144	144	2	Retrofit with (2) 12.5 Watt LED T8 4' Lamps; Direct Wire to Socket	25	0.050	50
PYMATUNING	BUILDING	94	INTERIOR		BUILDING 94	1	No Information; Area(s) Not Included in Scope/Pricing	0	0.000	0	1	No Retrofit	0	0.000	0
PYMATUNING	BUILDING	130	INTERIOR		BUILDING 130	1	No Information; Area(s) Not Included in Scope/Pricing	0	0.000	0	1	No Retrofit	0	0.000	0
PYMATUNING	BUILDING	141	INTERIOR		BUILDING 141	1	No Information; Area(s) Not Included in Scope/Pricing	0	0.000	0	1	No Retrofit	0	0.000	0
PYMATUNING	CABIN	1	INTERIOR		LIVING ROOM	1	Existing LED Fixture; No Retrofit	30	0.030	111	1	No Retrofit	30	0.030	111
PYMATUNING	CABIN	1	INTERIOR		KITCHEN	1	Existing LED Fixture; No Retrofit	30	0.030	111	1	No Retrofit	30	0.030	111
PYMATUNING	CABIN	1	INTERIOR		SINK	1	Existing LED Fixture; No Retrofit	30	0.030	111	1	No Retrofit	30	0.030	111
PYMATUNING	CABIN	1	INTERIOR		HALLWAY	1	Existing LED Fixture; No Retrofit	30	0.030	111	1	No Retrofit	30	0.030	111
PYMATUNING	CABIN	1	INTERIOR		BEDROOM	1	Existing LED Fixture; No Retrofit	30	0.030	111	1	No Retrofit	30	0.030	111
PYMATUNING	CABIN	1	INTERIOR		BEDROOM	1	Existing LED Fixture; No Retrofit	30	0.030	111	1	No Retrofit	30	0.030	111
PYMATUNING	CABIN	1	INTERIOR		BEDROOM	1	Existing LED Fixture; No Retrofit	30	0.030	111	1	No Retrofit	30	0.030	111
PYMATUNING	CABIN	1	INTERIOR		BATHROOM	1	Existing LED Fixture; No Retrofit	10	0.010	37	1	No Retrofit	10	0.010	37
PYMATUNING	CABIN	1	INTERIOR		VANITY	1	Existing LED Fixture; No Retrofit	10	0.010	37	1	No Retrofit	10	0.010	37
PYMATUNING	CABIN	1	INTERIOR		SHOWER	1	Existing LED Fixture; No Retrofit	10	0.010	37	1	No Retrofit	10	0.010	37
PYMATUNING	CABIN	1	INTERIOR		TABLE LAMPS	4	Existing LED Fixture; No Retrofit	10	0.040	148	4	No Retrofit	10	0.040	148
PYMATUNING	CABIN	1	EXTERIOR		PORCH	2	Existing LED Fixture; No Retrofit	40	0.080	350	2	No Retrofit	40	0.080	350
PYMATUNING	CABIN	2	INTERIOR		LIVING ROOM	1	Existing LED Fixture; No Retrofit	30	0.030	111	1	No Retrofit	30	0.030	111
PYMATUNING	CABIN	2	INTERIOR		KITCHEN	1	Existing LED Fixture; No Retrofit	30	0.030	111	1	No Retrofit	30	0.030	111
PYMATUNING	CABIN	2	INTERIOR		SINK	1	Existing LED Fixture; No Retrofit	30	0.030	111	1	No Retrofit	30	0.030	111
PYMATUNING	CABIN	2	INTERIOR		HALLWAY	1	Existing LED Fixture; No Retrofit	30	0.030	111	1	No Retrofit	30	0.030	111

©2013 Energy Systems Group, LLC

EXISTING FIXTURES										PROPOSED FIXTURE UPGRADE					
Park/Building Name	Building	Building #	Phase	Floor	Room Description	Qty	Description	Watts	kW	kWh	Qty	Description	Watts	kW	kWh
PYMATUNING	CABIN	2	INTERIOR		BEDROOM	1	Existing LED Fixture; No Retrofit	30	0.030	111	1	No Retrofit	30	0.030	111
PYMATUNING	CABIN	2	INTERIOR		BEDROOM	1	Existing LED Fixture; No Retrofit	30	0.030	111	1	No Retrofit	30	0.030	111
PYMATUNING	CABIN	2	INTERIOR		BEDROOM	1	Existing LED Fixture; No Retrofit	30	0.030	111	1	No Retrofit	30	0.030	111
PYMATUNING	CABIN	2	INTERIOR		BATHROOM	1	Existing LED Fixture; No Retrofit	10	0.010	37	1	No Retrofit	10	0.010	37
PYMATUNING	CABIN	2	INTERIOR		VANITY	1	Existing LED Fixture; No Retrofit	10	0.010	37	1	No Retrofit	10	0.010	37
PYMATUNING	CABIN	2	INTERIOR		SHOWER	1	Existing LED Fixture; No Retrofit	10	0.010	37	1	No Retrofit	10	0.010	37
PYMATUNING	CABIN	2	INTERIOR		TABLE LAMPS	4	Existing LED Fixture; No Retrofit	10	0.040	148	4	No Retrofit	10	0.040	148
PYMATUNING	CABIN	2	EXTERIOR		PORCH	2	Existing LED Fixture; No Retrofit	40	0.080	350	2	No Retrofit	40	0.080	350
PYMATUNING	CABIN	3	INTERIOR		LIVING ROOM	1	Existing LED Fixture; No Retrofit	30	0.030	111	1	No Retrofit	30	0.030	111
PYMATUNING	CABIN	3	INTERIOR		KITCHEN	1	Existing LED Fixture; No Retrofit	30	0.030	111	1	No Retrofit	30	0.030	111
PYMATUNING	CABIN	3	INTERIOR		SINK	1	Existing LED Fixture; No Retrofit	30	0.030	111	1	No Retrofit	30	0.030	111
PYMATUNING	CABIN	3	INTERIOR		HALLWAY	1	Existing LED Fixture; No Retrofit	30	0.030	111	1	No Retrofit	30	0.030	111
PYMATUNING	CABIN	3	INTERIOR		BEDROOM	1	Existing LED Fixture; No Retrofit	30	0.030	111	1	No Retrofit	30	0.030	111
PYMATUNING	CABIN	3	INTERIOR		BEDROOM	1	Existing LED Fixture; No Retrofit	30	0.030	111	1	No Retrofit	30	0.030	111
PYMATUNING	CABIN	3	INTERIOR		BEDROOM	1	Existing LED Fixture; No Retrofit	30	0.030	111	1	No Retrofit	30	0.030	111
PYMATUNING	CABIN	3	INTERIOR		BATHROOM	1	Existing LED Fixture; No Retrofit	10	0.010	37	1	No Retrofit	10	0.010	37
PYMATUNING	CABIN	3	INTERIOR		VANITY	1	Existing LED Fixture; No Retrofit	10	0.010	37	1	No Retrofit	10	0.010	37
PYMATUNING	CABIN	3	INTERIOR		SHOWER	1	Existing LED Fixture; No Retrofit	10	0.010	37	1	No Retrofit	10	0.010	37
PYMATUNING	CABIN	3	INTERIOR		TABLE LAMPS	4	Existing LED Fixture; No Retrofit	10	0.040	148	4	No Retrofit	10	0.040	148
PYMATUNING	CABIN	3	EXTERIOR		PORCH	2	Existing LED Fixture; No Retrofit	40	0.080	350	2	No Retrofit	40	0.080	350
PYMATUNING	CABIN	4	INTERIOR		LIVING ROOM	1	Existing LED Fixture; No Retrofit	30	0.030	111	1	No Retrofit	30	0.030	111
PYMATUNING	CABIN	4	INTERIOR		KITCHEN	1	Existing LED Fixture; No Retrofit	30	0.030	111	1	No Retrofit	30	0.030	111
PYMATUNING	CABIN	4	INTERIOR		SINK	1	Existing LED Fixture; No Retrofit	30	0.030	111	1	No Retrofit	30	0.030	111
PYMATUNING	CABIN	4	INTERIOR		HALLWAY	1	Existing LED Fixture; No Retrofit	30	0.030	111	1	No Retrofit	30	0.030	111
PYMATUNING	CABIN	4	INTERIOR		BEDROOM	1	Existing LED Fixture; No Retrofit	30	0.030	111	1	No Retrofit	30	0.030	111
PYMATUNING	CABIN	4	INTERIOR		BEDROOM	1	Existing LED Fixture; No Retrofit	30	0.030	111	1	No Retrofit	30	0.030	111

©2013 Energy Systems Group, LLC

EXISTING FIXTURES											PROPOSED FIXTURE UPGRADE				
Park/Building Name	Building	Building #	Phase	Floor	Room Description	Qty	Description	Watts	kW	kWh	Qty	Description	Watts	kW	kWh
PYMATUNING	CABIN	4	INTERIOR		BATHROOM	1	Existing LED Fixture; No Retrofit	10	0.010	37	1	No Retrofit	10	0.010	37
PYMATUNING	CABIN	4	INTERIOR		VANITY	1	Existing LED Fixture; No Retrofit	10	0.010	37	1	No Retrofit	10	0.010	37
PYMATUNING	CABIN	4	INTERIOR		SHOWER	1	Existing LED Fixture; No Retrofit	10	0.010	37	1	No Retrofit	10	0.010	37
PYMATUNING	CABIN	4	INTERIOR		TABLE LAMPS	4	Existing LED Fixture; No Retrofit	10	0.040	148	4	No Retrofit	10	0.040	148
PYMATUNING	CABIN	4	EXTERIOR		PORCH	2	Existing LED Fixture; No Retrofit	40	0.080	350	2	No Retrofit	40	0.080	350
PYMATUNING	CABIN	5	INTERIOR		LIVING ROOM	1	Existing LED Fixture; No Retrofit	30	0.030	111	1	No Retrofit	30	0.030	111
PYMATUNING	CABIN	5	INTERIOR		KITCHEN	1	Existing LED Fixture; No Retrofit	30	0.030	111	1	No Retrofit	30	0.030	111
PYMATUNING	CABIN	5	INTERIOR		SINK	1	Existing LED Fixture; No Retrofit	30	0.030	111	1	No Retrofit	30	0.030	111
PYMATUNING	CABIN	5	INTERIOR		HALLWAY	1	Existing LED Fixture; No Retrofit	30	0.030	111	1	No Retrofit	30	0.030	111
PYMATUNING	CABIN	5	INTERIOR		BEDROOM	1	Existing LED Fixture; No Retrofit	30	0.030	111	1	No Retrofit	30	0.030	111
PYMATUNING	CABIN	5	INTERIOR		BEDROOM	1	Existing LED Fixture; No Retrofit	30	0.030	111	1	No Retrofit	30	0.030	111
PYMATUNING	CABIN	5	INTERIOR		BATHROOM	1	Existing LED Fixture; No Retrofit	10	0.010	37	1	No Retrofit	10	0.010	37
PYMATUNING	CABIN	5	INTERIOR		VANITY	1	Existing LED Fixture; No Retrofit	10	0.010	37	1	No Retrofit	10	0.010	37
PYMATUNING	CABIN	5	INTERIOR		SHOWER	1	Existing LED Fixture; No Retrofit	10	0.010	37	1	No Retrofit	10	0.010	37
PYMATUNING	CABIN	5	INTERIOR		TABLE LAMPS	4	Existing LED Fixture; No Retrofit	10	0.040	148	4	No Retrofit	10	0.040	148
PYMATUNING	CABIN	5	EXTERIOR		PORCH	1	Existing LED Fixture; No Retrofit	40	0.040	175	1	No Retrofit	40	0.040	175
PYMATUNING	CABIN	6	INTERIOR		LIVING ROOM	1	Existing LED Fixture; No Retrofit	30	0.030	111	1	No Retrofit	30	0.030	111
PYMATUNING	CABIN	6	INTERIOR		KITCHEN	1	Existing LED Fixture; No Retrofit	30	0.030	111	1	No Retrofit	30	0.030	111
PYMATUNING	CABIN	6	INTERIOR		SINK	1	Existing LED Fixture; No Retrofit	30	0.030	111	1	No Retrofit	30	0.030	111
PYMATUNING	CABIN	6	INTERIOR		HALLWAY	1	Existing LED Fixture; No Retrofit	30	0.030	111	1	No Retrofit	30	0.030	111
PYMATUNING	CABIN	6	INTERIOR		BEDROOM	1	Existing LED Fixture; No Retrofit	30	0.030	111	1	No Retrofit	30	0.030	111
PYMATUNING	CABIN	6	INTERIOR		BEDROOM	1	Existing LED Fixture; No Retrofit	30	0.030	111	1	No Retrofit	30	0.030	111
PYMATUNING	CABIN	6	INTERIOR		BATHROOM	1	Existing LED Fixture; No Retrofit	10	0.010	37	1	No Retrofit	10	0.010	37
PYMATUNING	CABIN	6	INTERIOR		VANITY	1	Existing LED Fixture; No Retrofit	10	0.010	37	1	No Retrofit	10	0.010	37
PYMATUNING	CABIN	6	INTERIOR		SHOWER	1	Existing LED Fixture; No Retrofit	10	0.010	37	1	No Retrofit	10	0.010	37
PYMATUNING	CABIN	6	INTERIOR		TABLE LAMPS	4	Existing LED Fixture; No Retrofit	10	0.040	148	4	No Retrofit	10	0.040	148

©2013 Energy Systems Group, LLC

EXISTING FIXTURES										PROPOSED FIXTURE UPGRADE					
Park/Building Name	Building	Building #	Phase	Floor	Room Description	Qty	Description	Watts	kW	kWh	Qty	Description	Watts	kW	kWh
PYMATUNING	CABIN	6	EXTERIOR		PORCH	1	Existing LED Fixture; No Retrofit	40	0.040	175	1	No Retrofit	40	0.040	175
PYMATUNING	CABIN	7	INTERIOR		LIVING ROOM	1	Existing LED Fixture; No Retrofit	30	0.030	111	1	No Retrofit	30	0.030	111
PYMATUNING	CABIN	7	INTERIOR		KITCHEN	1	Existing LED Fixture; No Retrofit	30	0.030	111	1	No Retrofit	30	0.030	111
PYMATUNING	CABIN	7	INTERIOR		SINK	1	Existing LED Fixture; No Retrofit	30	0.030	111	1	No Retrofit	30	0.030	111
PYMATUNING	CABIN	7	INTERIOR		HALLWAY	1	Existing LED Fixture; No Retrofit	30	0.030	111	1	No Retrofit	30	0.030	111
PYMATUNING	CABIN	7	INTERIOR		BEDROOM	1	Existing LED Fixture; No Retrofit	30	0.030	111	1	No Retrofit	30	0.030	111
PYMATUNING	CABIN	7	INTERIOR		BEDROOM	1	Existing LED Fixture; No Retrofit	30	0.030	111	1	No Retrofit	30	0.030	111
PYMATUNING	CABIN	7	INTERIOR		BATHROOM	1	Existing LED Fixture; No Retrofit	10	0.010	37	1	No Retrofit	10	0.010	37
PYMATUNING	CABIN	7	INTERIOR		VANITY	1	Existing LED Fixture; No Retrofit	10	0.010	37	1	No Retrofit	10	0.010	37
PYMATUNING	CABIN	7	INTERIOR		SHOWER	1	Existing LED Fixture; No Retrofit	10	0.010	37	1	No Retrofit	10	0.010	37
PYMATUNING	CABIN	7	INTERIOR		TABLE LAMPS	4	Existing LED Fixture; No Retrofit	10	0.040	148	4	No Retrofit	10	0.040	148
PYMATUNING	CABIN	7	EXTERIOR		PORCH	2	Existing LED Fixture; No Retrofit	40	0.080	350	2	No Retrofit	40	0.080	350
PYMATUNING	CABIN	8	INTERIOR		LIVING ROOM	1	Existing LED Fixture; No Retrofit	30	0.030	111	1	No Retrofit	30	0.030	111
PYMATUNING	CABIN	8	INTERIOR		KITCHEN	1	Existing LED Fixture; No Retrofit	30	0.030	111	1	No Retrofit	30	0.030	111
PYMATUNING	CABIN	8	INTERIOR		SINK	1	Existing LED Fixture; No Retrofit	30	0.030	111	1	No Retrofit	30	0.030	111
PYMATUNING	CABIN	8	INTERIOR		HALLWAY	1	Existing LED Fixture; No Retrofit	30	0.030	111	1	No Retrofit	30	0.030	111
PYMATUNING	CABIN	8	INTERIOR		BEDROOM	1	Existing LED Fixture; No Retrofit	30	0.030	111	1	No Retrofit	30	0.030	111
PYMATUNING	CABIN	8	INTERIOR		BEDROOM	1	Existing LED Fixture; No Retrofit	30	0.030	111	1	No Retrofit	30	0.030	111
PYMATUNING	CABIN	8	INTERIOR		BATHROOM	1	Existing LED Fixture; No Retrofit	10	0.010	37	1	No Retrofit	10	0.010	37
PYMATUNING	CABIN	8	INTERIOR		VANITY	1	Existing LED Fixture; No Retrofit	10	0.010	37	1	No Retrofit	10	0.010	37
PYMATUNING	CABIN	8	INTERIOR		SHOWER	1	Existing LED Fixture; No Retrofit	10	0.010	37	1	No Retrofit	10	0.010	37
PYMATUNING	CABIN	8	INTERIOR		TABLE LAMPS	4	Existing LED Fixture; No Retrofit	10	0.040	148	4	No Retrofit	10	0.040	148
PYMATUNING	CABIN	8	EXTERIOR		PORCH	2	Existing LED Fixture; No Retrofit	40	0.080	350	2	No Retrofit	40	0.080	350
PYMATUNING	CABIN	9	INTERIOR		LIVING ROOM	1	Existing LED Fixture; No Retrofit	30	0.030	111	1	No Retrofit	30	0.030	111
PYMATUNING	CABIN	9	INTERIOR		KITCHEN	1	Existing LED Fixture; No Retrofit	30	0.030	111	1	No Retrofit	30	0.030	111
PYMATUNING	CABIN	9	INTERIOR		SINK	1	Existing LED Fixture; No Retrofit	30	0.030	111	1	No Retrofit	30	0.030	111

©2013 Energy Systems Group, LLC

EXISTING FIXTURES											PROPOSED FIXTURE UPGRADE				
Park/Building Name	Building	Building #	Phase	Floor	Room Description	Qty	Description	Watts	kW	kWh	Qty	Description	Watts	kW	kWh
PYMATUNING	CABIN	9	INTERIOR		HALLWAY	1	Existing LED Fixture; No Retrofit	30	0.030	111	1	No Retrofit	30	0.030	111
PYMATUNING	CABIN	9	INTERIOR		BEDROOM	1	Existing LED Fixture; No Retrofit	30	0.030	111	1	No Retrofit	30	0.030	111
PYMATUNING	CABIN	9	INTERIOR		BEDROOM	1	Existing LED Fixture; No Retrofit	30	0.030	111	1	No Retrofit	30	0.030	111
PYMATUNING	CABIN	9	INTERIOR		BATHROOM	1	Existing LED Fixture; No Retrofit	10	0.010	37	1	No Retrofit	10	0.010	37
PYMATUNING	CABIN	9	INTERIOR		VANITY	1	Existing LED Fixture; No Retrofit	10	0.010	37	1	No Retrofit	10	0.010	37
PYMATUNING	CABIN	9	INTERIOR		SHOWER	1	Existing LED Fixture; No Retrofit	10	0.010	37	1	No Retrofit	10	0.010	37
PYMATUNING	CABIN	9	INTERIOR		TABLE LAMPS	4	Existing LED Fixture; No Retrofit	10	0.040	148	4	No Retrofit	10	0.040	148
PYMATUNING	CABIN	9	EXTERIOR		PORCH	2	Existing LED Fixture; No Retrofit	40	0.080	350	2	No Retrofit	40	0.080	350
PYMATUNING	CABIN	10	INTERIOR		LIVING ROOM	1	Existing LED Fixture; No Retrofit	30	0.030	111	1	No Retrofit	30	0.030	111
PYMATUNING	CABIN	10	INTERIOR		KITCHEN	1	Existing LED Fixture; No Retrofit	30	0.030	111	1	No Retrofit	30	0.030	111
PYMATUNING	CABIN	10	INTERIOR		SINK	1	Existing LED Fixture; No Retrofit	30	0.030	111	1	No Retrofit	30	0.030	111
PYMATUNING	CABIN	10	INTERIOR		HALLWAY	1	Existing LED Fixture; No Retrofit	30	0.030	111	1	No Retrofit	30	0.030	111
PYMATUNING	CABIN	10	INTERIOR		BEDROOM	1	Existing LED Fixture; No Retrofit	30	0.030	111	1	No Retrofit	30	0.030	111
PYMATUNING	CABIN	10	INTERIOR		BEDROOM	1	Existing LED Fixture; No Retrofit	30	0.030	111	1	No Retrofit	30	0.030	111
PYMATUNING	CABIN	10	INTERIOR		BEDROOM	1	Existing LED Fixture; No Retrofit	30	0.030	111	1	No Retrofit	30	0.030	111
PYMATUNING	CABIN	10	INTERIOR		BATHROOM	1	Existing LED Fixture; No Retrofit	10	0.010	37	1	No Retrofit	10	0.010	37
PYMATUNING	CABIN	10	INTERIOR		VANITY	1	Existing LED Fixture; No Retrofit	10	0.010	37	1	No Retrofit	10	0.010	37
PYMATUNING	CABIN	10	INTERIOR		SHOWER	1	Existing LED Fixture; No Retrofit	10	0.010	37	1	No Retrofit	10	0.010	37
PYMATUNING	CABIN	10	INTERIOR		TABLE LAMPS	4	Existing LED Fixture; No Retrofit	10	0.040	148	4	No Retrofit	10	0.040	148
PYMATUNING	CABIN	10	EXTERIOR		PORCH	2	Existing LED Fixture; No Retrofit	40	0.080	350	2	No Retrofit	40	0.080	350
PYMATUNING	CABIN	11	INTERIOR		LIVING ROOM	1	Existing LED Fixture; No Retrofit	30	0.030	111	1	No Retrofit	30	0.030	111
PYMATUNING	CABIN	11	INTERIOR		KITCHEN	1	Existing LED Fixture; No Retrofit	30	0.030	111	1	No Retrofit	30	0.030	111
PYMATUNING	CABIN	11	INTERIOR		SINK	1	Existing LED Fixture; No Retrofit	30	0.030	111	1	No Retrofit	30	0.030	111
PYMATUNING	CABIN	11	INTERIOR		HALLWAY	1	Existing LED Fixture; No Retrofit	30	0.030	111	1	No Retrofit	30	0.030	111
PYMATUNING	CABIN	11	INTERIOR		BEDROOM	1	Existing LED Fixture; No Retrofit	30	0.030	111	1	No Retrofit	30	0.030	111
PYMATUNING	CABIN	11	INTERIOR		BEDROOM	1	Existing LED Fixture; No Retrofit	30	0.030	111	1	No Retrofit	30	0.030	111

©2013 Energy Systems Group, LLC

EXISTING FIXTURES											PROPOSED FIXTURE UPGRADE				
Park/Building Name	Building	Building #	Phase	Floor	Room Description	Qty	Description	Watts	kW	kWh	Qty	Description	Watts	kW	kWh
PYMATUNING	CABIN	11	INTERIOR		BEDROOM	1	Existing LED Fixture; No Retrofit	30	0.030	111	1	No Retrofit	30	0.030	111
PYMATUNING	CABIN	11	INTERIOR		BATHROOM	1	Existing LED Fixture; No Retrofit	10	0.010	37	1	No Retrofit	10	0.010	37
PYMATUNING	CABIN	11	INTERIOR		VANITY	1	Existing LED Fixture; No Retrofit	10	0.010	37	1	No Retrofit	10	0.010	37
PYMATUNING	CABIN	11	INTERIOR		SHOWER	1	Existing LED Fixture; No Retrofit	10	0.010	37	1	No Retrofit	10	0.010	37
PYMATUNING	CABIN	11	INTERIOR		TABLE LAMPS	4	Existing LED Fixture; No Retrofit	10	0.040	148	4	No Retrofit	10	0.040	148
PYMATUNING	CABIN	11	EXTERIOR		PORCH	2	Existing LED Fixture; No Retrofit	40	0.080	350	2	No Retrofit	40	0.080	350
PYMATUNING	CABIN	12	INTERIOR		LIVING ROOM	1	Existing LED Fixture; No Retrofit	30	0.030	111	1	No Retrofit	30	0.030	111
PYMATUNING	CABIN	12	INTERIOR		KITCHEN	1	Existing LED Fixture; No Retrofit	30	0.030	111	1	No Retrofit	30	0.030	111
PYMATUNING	CABIN	12	INTERIOR		SINK	1	Existing LED Fixture; No Retrofit	30	0.030	111	1	No Retrofit	30	0.030	111
PYMATUNING	CABIN	12	INTERIOR		HALLWAY	1	Existing LED Fixture; No Retrofit	30	0.030	111	1	No Retrofit	30	0.030	111
PYMATUNING	CABIN	12	INTERIOR		BEDROOM	1	Existing LED Fixture; No Retrofit	30	0.030	111	1	No Retrofit	30	0.030	111
PYMATUNING	CABIN	12	INTERIOR		BEDROOM	1	Existing LED Fixture; No Retrofit	30	0.030	111	1	No Retrofit	30	0.030	111
PYMATUNING	CABIN	12	INTERIOR		BEDROOM	1	Existing LED Fixture; No Retrofit	30	0.030	111	1	No Retrofit	30	0.030	111
PYMATUNING	CABIN	12	INTERIOR		BATHROOM	1	Existing LED Fixture; No Retrofit	10	0.010	37	1	No Retrofit	10	0.010	37
PYMATUNING	CABIN	12	INTERIOR		VANITY	1	Existing LED Fixture; No Retrofit	10	0.010	37	1	No Retrofit	10	0.010	37
PYMATUNING	CABIN	12	INTERIOR		SHOWER	1	Existing LED Fixture; No Retrofit	10	0.010	37	1	No Retrofit	10	0.010	37
PYMATUNING	CABIN	12	INTERIOR		TABLE LAMPS	4	Existing LED Fixture; No Retrofit	10	0.040	148	4	No Retrofit	10	0.040	148
PYMATUNING	CABIN	12	EXTERIOR		PORCH	2	Existing LED Fixture; No Retrofit	40	0.080	350	2	No Retrofit	40	0.080	350
PYMATUNING	CABIN	13	INTERIOR		LIVING ROOM	1	Existing LED Fixture; No Retrofit	30	0.030	111	1	No Retrofit	30	0.030	111
PYMATUNING	CABIN	13	INTERIOR		KITCHEN	1	Existing LED Fixture; No Retrofit	30	0.030	111	1	No Retrofit	30	0.030	111
PYMATUNING	CABIN	13	INTERIOR		SINK	1	Existing LED Fixture; No Retrofit	30	0.030	111	1	No Retrofit	30	0.030	111
PYMATUNING	CABIN	13	INTERIOR		HALLWAY	1	Existing LED Fixture; No Retrofit	30	0.030	111	1	No Retrofit	30	0.030	111
PYMATUNING	CABIN	13	INTERIOR		BEDROOM	1	Existing LED Fixture; No Retrofit	30	0.030	111	1	No Retrofit	30	0.030	111
PYMATUNING	CABIN	13	INTERIOR		BEDROOM	1	Existing LED Fixture; No Retrofit	30	0.030	111	1	No Retrofit	30	0.030	111
PYMATUNING	CABIN	13	INTERIOR		BEDROOM	1	Existing LED Fixture; No Retrofit	30	0.030	111	1	No Retrofit	30	0.030	111
PYMATUNING	CABIN	13	INTERIOR		BATHROOM	1	Existing LED Fixture; No Retrofit	10	0.010	37	1	No Retrofit	10	0.010	37

©2013 Energy Systems Group, LLC

EXISTING FIXTURES										PROPOSED FIXTURE UPGRADE					
Park/Building Name	Building	Building #	Phase	Floor	Room Description	Qty	Description	Watts	kW	kWh	Qty	Description	Watts	kW	kWh
PYMATUNING	CABIN	13	INTERIOR		VANITY	1	Existing LED Fixture; No Retrofit	10	0.010	37	1	No Retrofit	10	0.010	37
PYMATUNING	CABIN	13	INTERIOR		SHOWER	1	Existing LED Fixture; No Retrofit	10	0.010	37	1	No Retrofit	10	0.010	37
PYMATUNING	CABIN	13	INTERIOR		TABLE LAMPS	4	Existing LED Fixture; No Retrofit	10	0.040	148	4	No Retrofit	10	0.040	148
PYMATUNING	CABIN	13	EXTERIOR		PORCH	2	Existing LED Fixture; No Retrofit	40	0.080	350	2	No Retrofit	40	0.080	350
PYMATUNING	CABIN	14	INTERIOR		LIVING ROOM	1	Existing LED Fixture; No Retrofit	30	0.030	111	1	No Retrofit	30	0.030	111
PYMATUNING	CABIN	14	INTERIOR		KITCHEN	1	Existing LED Fixture; No Retrofit	30	0.030	111	1	No Retrofit	30	0.030	111
PYMATUNING	CABIN	14	INTERIOR		SINK	1	Existing LED Fixture; No Retrofit	30	0.030	111	1	No Retrofit	30	0.030	111
PYMATUNING	CABIN	14	INTERIOR		HALLWAY	1	Existing LED Fixture; No Retrofit	30	0.030	111	1	No Retrofit	30	0.030	111
PYMATUNING	CABIN	14	INTERIOR		BEDROOM	1	Existing LED Fixture; No Retrofit	30	0.030	111	1	No Retrofit	30	0.030	111
PYMATUNING	CABIN	14	INTERIOR		BEDROOM	1	Existing LED Fixture; No Retrofit	30	0.030	111	1	No Retrofit	30	0.030	111
PYMATUNING	CABIN	14	INTERIOR		BEDROOM	1	Existing LED Fixture; No Retrofit	30	0.030	111	1	No Retrofit	30	0.030	111
PYMATUNING	CABIN	14	INTERIOR		BATHROOM	1	Existing LED Fixture; No Retrofit	10	0.010	37	1	No Retrofit	10	0.010	37
PYMATUNING	CABIN	14	INTERIOR		VANITY	1	Existing LED Fixture; No Retrofit	10	0.010	37	1	No Retrofit	10	0.010	37
PYMATUNING	CABIN	14	INTERIOR		SHOWER	1	Existing LED Fixture; No Retrofit	10	0.010	37	1	No Retrofit	10	0.010	37
PYMATUNING	CABIN	14	INTERIOR		TABLE LAMPS	4	Existing LED Fixture; No Retrofit	10	0.040	148	4	No Retrofit	10	0.040	148
PYMATUNING	CABIN	14	EXTERIOR		PORCH	2	Existing LED Fixture; No Retrofit	40	0.080	350	2	No Retrofit	40	0.080	350
PYMATUNING	CABIN	15	INTERIOR		LIVING ROOM	1	Existing LED Fixture; No Retrofit	30	0.030	111	1	No Retrofit	30	0.030	111
PYMATUNING	CABIN	15	INTERIOR		KITCHEN	1	Existing LED Fixture; No Retrofit	30	0.030	111	1	No Retrofit	30	0.030	111
PYMATUNING	CABIN	15	INTERIOR		SINK	1	Existing LED Fixture; No Retrofit	30	0.030	111	1	No Retrofit	30	0.030	111
PYMATUNING	CABIN	15	INTERIOR		HALLWAY	1	Existing LED Fixture; No Retrofit	30	0.030	111	1	No Retrofit	30	0.030	111
PYMATUNING	CABIN	15	INTERIOR		BEDROOM	1	Existing LED Fixture; No Retrofit	30	0.030	111	1	No Retrofit	30	0.030	111
PYMATUNING	CABIN	15	INTERIOR		BEDROOM	1	Existing LED Fixture; No Retrofit	30	0.030	111	1	No Retrofit	30	0.030	111
PYMATUNING	CABIN	15	INTERIOR		BEDROOM	1	Existing LED Fixture; No Retrofit	30	0.030	111	1	No Retrofit	30	0.030	111
PYMATUNING	CABIN	15	INTERIOR		BATHROOM	1	Existing LED Fixture; No Retrofit	10	0.010	37	1	No Retrofit	10	0.010	37
PYMATUNING	CABIN	15	INTERIOR		VANITY	1	Existing LED Fixture; No Retrofit	10	0.010	37	1	No Retrofit	10	0.010	37
PYMATUNING	CABIN	15	INTERIOR		SHOWER	1	Existing LED Fixture; No Retrofit	10	0.010	37	1	No Retrofit	10	0.010	37

©2013 Energy Systems Group, LLC

EXISTING FIXTURES											PROPOSED FIXTURE UPGRADE				
Park/Building Name	Building	Building #	Phase	Floor	Room Description	Qty	Description	Watts	kW	kWh	Qty	Description	Watts	kW	kWh
PYMATUNING	CABIN	15	INTERIOR		TABLE LAMPS	4	Existing LED Fixture; No Retrofit	10	0.040	148	4	No Retrofit	10	0.040	148
PYMATUNING	CABIN	15	EXTERIOR		PORCH	2	Existing LED Fixture; No Retrofit	40	0.080	350	2	No Retrofit	40	0.080	350
PYMATUNING	CABIN	16	INTERIOR		LIVING ROOM	1	Existing LED Fixture; No Retrofit	30	0.030	111	1	No Retrofit	30	0.030	111
PYMATUNING	CABIN	16	INTERIOR		KITCHEN	1	Existing LED Fixture; No Retrofit	30	0.030	111	1	No Retrofit	30	0.030	111
PYMATUNING	CABIN	16	INTERIOR		SINK	1	Existing LED Fixture; No Retrofit	30	0.030	111	1	No Retrofit	30	0.030	111
PYMATUNING	CABIN	16	INTERIOR		HALLWAY	1	Existing LED Fixture; No Retrofit	30	0.030	111	1	No Retrofit	30	0.030	111
PYMATUNING	CABIN	16	INTERIOR		BEDROOM	1	Existing LED Fixture; No Retrofit	30	0.030	111	1	No Retrofit	30	0.030	111
PYMATUNING	CABIN	16	INTERIOR		BEDROOM	1	Existing LED Fixture; No Retrofit	30	0.030	111	1	No Retrofit	30	0.030	111
PYMATUNING	CABIN	16	INTERIOR		BEDROOM	1	Existing LED Fixture; No Retrofit	30	0.030	111	1	No Retrofit	30	0.030	111
PYMATUNING	CABIN	16	INTERIOR		BATHROOM	1	Existing LED Fixture; No Retrofit	10	0.010	37	1	No Retrofit	10	0.010	37
PYMATUNING	CABIN	16	INTERIOR		VANITY	1	Existing LED Fixture; No Retrofit	10	0.010	37	1	No Retrofit	10	0.010	37
PYMATUNING	CABIN	16	INTERIOR		SHOWER	1	Existing LED Fixture; No Retrofit	10	0.010	37	1	No Retrofit	10	0.010	37
PYMATUNING	CABIN	16	INTERIOR		TABLE LAMPS	4	Existing LED Fixture; No Retrofit	10	0.040	148	4	No Retrofit	10	0.040	148
PYMATUNING	CABIN	16	EXTERIOR		PORCH	2	Existing LED Fixture; No Retrofit	40	0.080	350	2	No Retrofit	40	0.080	350
PYMATUNING	CABIN	17	INTERIOR		LIVING ROOM	1	Existing LED Fixture; No Retrofit	30	0.030	111	1	No Retrofit	30	0.030	111
PYMATUNING	CABIN	17	INTERIOR		KITCHEN	1	Existing LED Fixture; No Retrofit	30	0.030	111	1	No Retrofit	30	0.030	111
PYMATUNING	CABIN	17	INTERIOR		SINK	1	Existing LED Fixture; No Retrofit	30	0.030	111	1	No Retrofit	30	0.030	111
PYMATUNING	CABIN	17	INTERIOR		HALLWAY	1	Existing LED Fixture; No Retrofit	30	0.030	111	1	No Retrofit	30	0.030	111
PYMATUNING	CABIN	17	INTERIOR		BEDROOM	1	Existing LED Fixture; No Retrofit	30	0.030	111	1	No Retrofit	30	0.030	111
PYMATUNING	CABIN	17	INTERIOR		BEDROOM	1	Existing LED Fixture; No Retrofit	30	0.030	111	1	No Retrofit	30	0.030	111
PYMATUNING	CABIN	17	INTERIOR		BEDROOM	1	Existing LED Fixture; No Retrofit	30	0.030	111	1	No Retrofit	30	0.030	111
PYMATUNING	CABIN	17	INTERIOR		BATHROOM	1	Existing LED Fixture; No Retrofit	10	0.010	37	1	No Retrofit	10	0.010	37
PYMATUNING	CABIN	17	INTERIOR		VANITY	1	Existing LED Fixture; No Retrofit	10	0.010	37	1	No Retrofit	10	0.010	37
PYMATUNING	CABIN	17	INTERIOR		SHOWER	1	Existing LED Fixture; No Retrofit	10	0.010	37	1	No Retrofit	10	0.010	37
PYMATUNING	CABIN	17	INTERIOR		TABLE LAMPS	4	Existing LED Fixture; No Retrofit	10	0.040	148	4	No Retrofit	10	0.040	148
PYMATUNING	CABIN	17	EXTERIOR		PORCH	2	Existing LED Fixture; No Retrofit	40	0.080	350	2	No Retrofit	40	0.080	350

©2013 Energy Systems Group, LLC

EXISTING FIXTURES									PROPOSED FIXTURE UPGRADE					
Park/Building Name	Building	Building #	Phase	Floor	Room Description	Qty	Description	Watts	kW	kWh	Qty	Description	Watts	kW	kWh
PYMATUNING	CABIN	18	INTERIOR		LIVING ROOM	1	Existing LED Fixture; No Retrofit	30	0.030	111	1	No Retrofit	30	0.030	111
PYMATUNING	CABIN	18	INTERIOR		KITCHEN	1	Existing LED Fixture; No Retrofit	30	0.030	111	1	No Retrofit	30	0.030	111
PYMATUNING	CABIN	18	INTERIOR		SINK	1	Existing LED Fixture; No Retrofit	30	0.030	111	1	No Retrofit	30	0.030	111
PYMATUNING	CABIN	18	INTERIOR		HALLWAY	1	Existing LED Fixture; No Retrofit	30	0.030	111	1	No Retrofit	30	0.030	111
PYMATUNING	CABIN	18	INTERIOR		BEDROOM	1	Existing LED Fixture; No Retrofit	30	0.030	111	1	No Retrofit	30	0.030	111
PYMATUNING	CABIN	18	INTERIOR		BEDROOM	1	Existing LED Fixture; No Retrofit	30	0.030	111	1	No Retrofit	30	0.030	111
PYMATUNING	CABIN	18	INTERIOR		BEDROOM	1	Existing LED Fixture; No Retrofit	30	0.030	111	1	No Retrofit	30	0.030	111
PYMATUNING	CABIN	18	INTERIOR		BATHROOM	1	Existing LED Fixture; No Retrofit	10	0.010	37	1	No Retrofit	10	0.010	37
PYMATUNING	CABIN	18	INTERIOR		VANITY	1	Existing LED Fixture; No Retrofit	10	0.010	37	1	No Retrofit	10	0.010	37
PYMATUNING	CABIN	18	INTERIOR		SHOWER	1	Existing LED Fixture; No Retrofit	10	0.010	37	1	No Retrofit	10	0.010	37
PYMATUNING	CABIN	18	INTERIOR		TABLE LAMPS	4	Existing LED Fixture; No Retrofit	10	0.040	148	4	No Retrofit	10	0.040	148
PYMATUNING	CABIN	18	EXTERIOR		PORCH	2	Existing LED Fixture; No Retrofit	40	0.080	350	2	No Retrofit	40	0.080	350
PYMATUNING	CABIN	19	INTERIOR		LIVING ROOM	1	Existing LED Fixture; No Retrofit	30	0.030	111	1	No Retrofit	30	0.030	111
PYMATUNING	CABIN	19	INTERIOR		KITCHEN	1	Existing LED Fixture; No Retrofit	30	0.030	111	1	No Retrofit	30	0.030	111
PYMATUNING	CABIN	19	INTERIOR		SINK	1	Existing LED Fixture; No Retrofit	30	0.030	111	1	No Retrofit	30	0.030	111
PYMATUNING	CABIN	19	INTERIOR		HALLWAY	1	Existing LED Fixture; No Retrofit	30	0.030	111	1	No Retrofit	30	0.030	111
PYMATUNING	CABIN	19	INTERIOR		BEDROOM	1	Existing LED Fixture; No Retrofit	30	0.030	111	1	No Retrofit	30	0.030	111
PYMATUNING	CABIN	19	INTERIOR		BEDROOM	1	Existing LED Fixture; No Retrofit	30	0.030	111	1	No Retrofit	30	0.030	111
PYMATUNING	CABIN	19	INTERIOR		BEDROOM	1	Existing LED Fixture; No Retrofit	30	0.030	111	1	No Retrofit	30	0.030	111
PYMATUNING	CABIN	19	INTERIOR		BATHROOM	1	Existing LED Fixture; No Retrofit	10	0.010	37	1	No Retrofit	10	0.010	37
PYMATUNING	CABIN	19	INTERIOR		VANITY	1	Existing LED Fixture; No Retrofit	10	0.010	37	1	No Retrofit	10	0.010	37
PYMATUNING	CABIN	19	INTERIOR		SHOWER	1	Existing LED Fixture; No Retrofit	10	0.010	37	1	No Retrofit	10	0.010	37
PYMATUNING	CABIN	19	INTERIOR		TABLE LAMPS	4	Existing LED Fixture; No Retrofit	10	0.040	148	4	No Retrofit	10	0.040	148
PYMATUNING	CABIN	19	EXTERIOR		PORCH	2	Existing LED Fixture; No Retrofit	40	0.080	350	2	No Retrofit	40	0.080	350
PYMATUNING	CABIN	20	INTERIOR		LIVING ROOM	1	Existing LED Fixture; No Retrofit	30	0.030	111	1	No Retrofit	30	0.030	111
PYMATUNING	CABIN	20	INTERIOR		KITCHEN	1	Existing LED Fixture; No Retrofit	30	0.030	111	1	No Retrofit	30	0.030	111

©2013 Energy Systems Group, LLC

EXISTING FIXTURES											PROPOSED FIXTURE UPGRADE				
Park/Building Name	Building	Building #	Phase	Floor	Room Description	Qty	Description	Watts	kW	kWh	Qty	Description	Watts	kW	kWh
PYMATUNING	CABIN	20	INTERIOR		SINK	1	Existing LED Fixture; No Retrofit	30	0.030	111	1	No Retrofit	30	0.030	111
PYMATUNING	CABIN	20	INTERIOR		HALLWAY	1	Existing LED Fixture; No Retrofit	30	0.030	111	1	No Retrofit	30	0.030	111
PYMATUNING	CABIN	20	INTERIOR		BEDROOM	1	Existing LED Fixture; No Retrofit	30	0.030	111	1	No Retrofit	30	0.030	111
PYMATUNING	CABIN	20	INTERIOR		BEDROOM	1	Existing LED Fixture; No Retrofit	30	0.030	111	1	No Retrofit	30	0.030	111
PYMATUNING	CABIN	20	INTERIOR		BATHROOM	1	Existing LED Fixture; No Retrofit	10	0.010	37	1	No Retrofit	10	0.010	37
PYMATUNING	CABIN	20	INTERIOR		VANITY	1	Existing LED Fixture; No Retrofit	10	0.010	37	1	No Retrofit	10	0.010	37
PYMATUNING	CABIN	20	INTERIOR		SHOWER	1	Existing LED Fixture; No Retrofit	10	0.010	37	1	No Retrofit	10	0.010	37
PYMATUNING	CABIN	20	INTERIOR		TABLE LAMPS	3	Existing LED Fixture; No Retrofit	10	0.030	111	3	No Retrofit	10	0.030	111
PYMATUNING	CABIN	20	EXTERIOR		PORCH	1	Existing LED Fixture; No Retrofit	40	0.040	175	1	No Retrofit	40	0.040	175
PYMATUNING	CABIN	21	INTERIOR		LIVING ROOM	1	Existing LED Fixture; No Retrofit	30	0.030	111	1	No Retrofit	30	0.030	111
PYMATUNING	CABIN	21	INTERIOR		KITCHEN	1	Existing LED Fixture; No Retrofit	30	0.030	111	1	No Retrofit	30	0.030	111
PYMATUNING	CABIN	21	INTERIOR		SINK	1	Existing LED Fixture; No Retrofit	30	0.030	111	1	No Retrofit	30	0.030	111
PYMATUNING	CABIN	21	INTERIOR		HALLWAY	1	Existing LED Fixture; No Retrofit	30	0.030	111	1	No Retrofit	30	0.030	111
PYMATUNING	CABIN	21	INTERIOR		BEDROOM	1	Existing LED Fixture; No Retrofit	30	0.030	111	1	No Retrofit	30	0.030	111
PYMATUNING	CABIN	21	INTERIOR		BEDROOM	1	Existing LED Fixture; No Retrofit	30	0.030	111	1	No Retrofit	30	0.030	111
PYMATUNING	CABIN	21	INTERIOR		BEDROOM	1	Existing LED Fixture; No Retrofit	30	0.030	111	1	No Retrofit	30	0.030	111
PYMATUNING	CABIN	21	INTERIOR		BATHROOM	1	Existing LED Fixture; No Retrofit	10	0.010	37	1	No Retrofit	10	0.010	37
PYMATUNING	CABIN	21	INTERIOR		VANITY	1	Existing LED Fixture; No Retrofit	10	0.010	37	1	No Retrofit	10	0.010	37
PYMATUNING	CABIN	21	INTERIOR		SHOWER	1	Existing LED Fixture; No Retrofit	10	0.010	37	1	No Retrofit	10	0.010	37
PYMATUNING	CABIN	21	INTERIOR		TABLE LAMPS	4	Existing LED Fixture; No Retrofit	10	0.040	148	4	No Retrofit	10	0.040	148
PYMATUNING	CABIN	21	EXTERIOR		PORCH	2	Existing LED Fixture; No Retrofit	40	0.080	350	2	No Retrofit	40	0.080	350
PYMATUNING	CABIN	22	INTERIOR		LIVING ROOM	1	Existing LED Fixture; No Retrofit	30	0.030	111	1	No Retrofit	30	0.030	111
PYMATUNING	CABIN	22	INTERIOR		KITCHEN	1	Existing LED Fixture; No Retrofit	30	0.030	111	1	No Retrofit	30	0.030	111
PYMATUNING	CABIN	22	INTERIOR		SINK	1	Existing LED Fixture; No Retrofit	30	0.030	111	1	No Retrofit	30	0.030	111
PYMATUNING	CABIN	22	INTERIOR		HALLWAY	1	Existing LED Fixture; No Retrofit	30	0.030	111	1	No Retrofit	30	0.030	111
PYMATUNING	CABIN	22	INTERIOR		BEDROOM	1	Existing LED Fixture; No Retrofit	30	0.030	111	1	No Retrofit	30	0.030	111

©2013 Energy Systems Group, LLC

EXISTING FIXTURES											PROPOSED FIXTURE UPGRADE				
Park/Building Name	Building	Building #	Phase	Floor	Room Description	Qty	Description	Watts	kW	kWh	Qty	Description	Watts	kW	kWh
PYMATUNING	CABIN	22	INTERIOR		BEDROOM	1	Existing LED Fixture; No Retrofit	30	0.030	111	1	No Retrofit	30	0.030	111
PYMATUNING	CABIN	22	INTERIOR		BEDROOM	1	Existing LED Fixture; No Retrofit	30	0.030	111	1	No Retrofit	30	0.030	111
PYMATUNING	CABIN	22	INTERIOR		BATHROOM	1	Existing LED Fixture; No Retrofit	10	0.010	37	1	No Retrofit	10	0.010	37
PYMATUNING	CABIN	22	INTERIOR		VANITY	1	Existing LED Fixture; No Retrofit	10	0.010	37	1	No Retrofit	10	0.010	37
PYMATUNING	CABIN	22	INTERIOR		SHOWER	1	Existing LED Fixture; No Retrofit	10	0.010	37	1	No Retrofit	10	0.010	37
PYMATUNING	CABIN	22	INTERIOR		TABLE LAMPS	4	Existing LED Fixture; No Retrofit	10	0.040	148	4	No Retrofit	10	0.040	148
PYMATUNING	CABIN	22	EXTERIOR		PORCH	1	Existing LED Fixture; No Retrofit	40	0.040	175	1	No Retrofit	40	0.040	175
PYMATUNING	CABIN	23	INTERIOR		LIVING ROOM	1	Existing LED Fixture; No Retrofit	30	0.030	111	1	No Retrofit	30	0.030	111
PYMATUNING	CABIN	23	INTERIOR		KITCHEN	1	Existing LED Fixture; No Retrofit	30	0.030	111	1	No Retrofit	30	0.030	111
PYMATUNING	CABIN	23	INTERIOR		SINK	1	Existing LED Fixture; No Retrofit	30	0.030	111	1	No Retrofit	30	0.030	111
PYMATUNING	CABIN	23	INTERIOR		HALLWAY	1	Existing LED Fixture; No Retrofit	30	0.030	111	1	No Retrofit	30	0.030	111
PYMATUNING	CABIN	23	INTERIOR		BEDROOM	1	Existing LED Fixture; No Retrofit	30	0.030	111	1	No Retrofit	30	0.030	111
PYMATUNING	CABIN	23	INTERIOR		BEDROOM	1	Existing LED Fixture; No Retrofit	30	0.030	111	1	No Retrofit	30	0.030	111
PYMATUNING	CABIN	23	INTERIOR		BEDROOM	1	Existing LED Fixture; No Retrofit	30	0.030	111	1	No Retrofit	30	0.030	111
PYMATUNING	CABIN	23	INTERIOR		BATHROOM	1	Existing LED Fixture; No Retrofit	10	0.010	37	1	No Retrofit	10	0.010	37
PYMATUNING	CABIN	23	INTERIOR		VANITY	1	Existing LED Fixture; No Retrofit	10	0.010	37	1	No Retrofit	10	0.010	37
PYMATUNING	CABIN	23	INTERIOR		SHOWER	1	Existing LED Fixture; No Retrofit	10	0.010	37	1	No Retrofit	10	0.010	37
PYMATUNING	CABIN	23	INTERIOR		TABLE LAMPS	4	Existing LED Fixture; No Retrofit	10	0.040	148	4	No Retrofit	10	0.040	148
PYMATUNING	CABIN	23	EXTERIOR		PORCH	2	Existing LED Fixture; No Retrofit	40	0.080	350	2	No Retrofit	40	0.080	350
PYMATUNING	CABIN	24	INTERIOR		LIVING ROOM	1	Existing LED Fixture; No Retrofit	30	0.030	111	1	No Retrofit	30	0.030	111
PYMATUNING	CABIN	24	INTERIOR		KITCHEN	1	Existing LED Fixture; No Retrofit	30	0.030	111	1	No Retrofit	30	0.030	111
PYMATUNING	CABIN	24	INTERIOR		SINK	1	Existing LED Fixture; No Retrofit	30	0.030	111	1	No Retrofit	30	0.030	111
PYMATUNING	CABIN	24	INTERIOR		HALLWAY	1	Existing LED Fixture; No Retrofit	30	0.030	111	1	No Retrofit	30	0.030	111
PYMATUNING	CABIN	24	INTERIOR		BEDROOM	1	Existing LED Fixture; No Retrofit	30	0.030	111	1	No Retrofit	30	0.030	111
PYMATUNING	CABIN	24	INTERIOR		BEDROOM	1	Existing LED Fixture; No Retrofit	30	0.030	111	1	No Retrofit	30	0.030	111
PYMATUNING	CABIN	24	INTERIOR		BEDROOM	1	Existing LED Fixture; No Retrofit	30	0.030	111	1	No Retrofit	30	0.030	111

©2013 Energy Systems Group, LLC

EXISTING FIXTURES											PROPOSED FIXTURE UPGRADE				
Park/Building Name	Building	Building #	Phase	Floor	Room Description	Qty	Description	Watts	kW	kWh	Qty	Description	Watts	kW	kWh
PYMATUNING	CABIN	24	INTERIOR		BATHROOM	1	Existing LED Fixture; No Retrofit	10	0.010	37	1	No Retrofit	10	0.010	37
PYMATUNING	CABIN	24	INTERIOR		VANITY	1	Existing LED Fixture; No Retrofit	10	0.010	37	1	No Retrofit	10	0.010	37
PYMATUNING	CABIN	24	INTERIOR		SHOWER	1	Existing LED Fixture; No Retrofit	10	0.010	37	1	No Retrofit	10	0.010	37
PYMATUNING	CABIN	24	INTERIOR		TABLE LAMPS	4	Existing LED Fixture; No Retrofit	10	0.040	148	4	No Retrofit	10	0.040	148
PYMATUNING	CABIN	24	EXTERIOR		PORCH	2	Existing LED Fixture; No Retrofit	40	0.080	350	2	No Retrofit	40	0.080	350
PYMATUNING	CABIN	25	INTERIOR		LIVING ROOM	1	Existing LED Fixture; No Retrofit	30	0.030	111	1	No Retrofit	30	0.030	111
PYMATUNING	CABIN	25	INTERIOR		KITCHEN	1	Existing LED Fixture; No Retrofit	30	0.030	111	1	No Retrofit	30	0.030	111
PYMATUNING	CABIN	25	INTERIOR		SINK	1	Existing LED Fixture; No Retrofit	30	0.030	111	1	No Retrofit	30	0.030	111
PYMATUNING	CABIN	25	INTERIOR		HALLWAY	1	Existing LED Fixture; No Retrofit	30	0.030	111	1	No Retrofit	30	0.030	111
PYMATUNING	CABIN	25	INTERIOR		BEDROOM	1	Existing LED Fixture; No Retrofit	30	0.030	111	1	No Retrofit	30	0.030	111
PYMATUNING	CABIN	25	INTERIOR		BEDROOM	1	Existing LED Fixture; No Retrofit	30	0.030	111	1	No Retrofit	30	0.030	111
PYMATUNING	CABIN	25	INTERIOR		BEDROOM	1	Existing LED Fixture; No Retrofit	30	0.030	111	1	No Retrofit	30	0.030	111
PYMATUNING	CABIN	25	INTERIOR		BATHROOM	1	Existing LED Fixture; No Retrofit	10	0.010	37	1	No Retrofit	10	0.010	37
PYMATUNING	CABIN	25	INTERIOR		VANITY	1	Existing LED Fixture; No Retrofit	10	0.010	37	1	No Retrofit	10	0.010	37
PYMATUNING	CABIN	25	INTERIOR		SHOWER	1	Existing LED Fixture; No Retrofit	10	0.010	37	1	No Retrofit	10	0.010	37
PYMATUNING	CABIN	25	INTERIOR		TABLE LAMPS	4	Existing LED Fixture; No Retrofit	10	0.040	148	4	No Retrofit	10	0.040	148
PYMATUNING	CABIN	25	EXTERIOR		PORCH	2	Existing LED Fixture; No Retrofit	40	0.080	350	2	No Retrofit	40	0.080	350
PYMATUNING	COMFORT STATION SHELTER 9 RESTROOM	100	INTERIOR		WOMENS RESTROOM	3	T8 1x4 2-Lamp Vaportight Fixture	62	0.186	513	3	Retrofit with (2) 12.5 Watt LED T8 4' Lamps; Direct Wire to Socket	25	0.075	207
PYMATUNING	COMFORT STATION SHELTER 9 RESTROOM	100	INTERIOR		RESTROOM	1	T8 1x4 2-Lamp Vaportight Fixture	62	0.062	32	1	Retrofit with (2) 12.5 Watt LED T8 4' Lamps; Direct Wire to Socket	25	0.025	13
PYMATUNING	COMFORT STATION SHELTER 9 RESTROOM	100	INTERIOR		MENS RESTROOM	3	T8 1x4 2-Lamp Vaportight Fixture	62	0.186	513	3	Retrofit with (2) 12.5 Watt LED T8 4' Lamps; Direct Wire to Socket	25	0.075	207
PYMATUNING	COMFORT STATION SHELTER 9 RESTROOM	100	INTERIOR		MECHANICAL	1	T8 1x4 2-Lamp Vaportight Fixture	62	0.062	62	1	Retrofit with (2) 12.5 Watt LED T8 4' Lamps; Direct Wire to Socket	25	0.025	25
PYMATUNING	JAMESTOWN CAMP FISH CLEANING STATION		INTERIOR		FISH ROOM	3	T8 1x4 2-Lamp Vaportight Fixture	62	0.186	513	3	Retrofit with (2) 12.5 Watt LED T8 4' Lamps; Direct Wire to Socket	25	0.075	207
PYMATUNING	CARP POINT RESTROOM COMFORT STATION	45	INTERIOR		MENS RESTROOM	5	T8 2x2 1-Lamp Vanity Fixture	22	0.110	304	5	Retrofit with (1) 10 Watt LED T8 2' Lamp; Direct Wire to Socket	10	0.050	138
PYMATUNING	CARP POINT RESTROOM COMFORT STATION	45	INTERIOR		WOMENS RESTROOM	5	T8 2x2 1-Lamp Vanity Fixture	22	0.110	304	5	Retrofit with (1) 10 Watt LED T8 2' Lamp; Direct Wire to Socket	10	0.050	138
PYMATUNING	CARP POINT RESTROOM COMFORT STATION	45	INTERIOR		MECHANICAL	2	T8 2x2 1-Lamp Vanity Fixture	22	0.044	44	2	Retrofit with (1) 10 Watt LED T8 2' Lamp; Direct Wire to Socket	10	0.020	20
PYMATUNING	CARP POINT RESTROOM COMFORT STATION	45	EXTERIOR		EXTERIOR	2	100 Watt High Pressure Sodium Wall Pack Fixture	125	0.250	720	2	New 24 Watt LED Wall Pack Fixture; Non-Dark Sky	25	0.050	144

©2013 Energy Systems Group, LLC

				EXISTING FIXTURES								PROPOSED FIXTURE UPGRADE				
Park/Building Name	Building	Building #	Phase	Floor	Room Description	Qty	Description	Watts	kW	kWh	Qty	Description	Watts	kW	kWh
PYMATUNING	MANAGER RESIDENCE DAN	36	INTERIOR		KITCHEN	1	60 Watt Incandescent 5-Lamp A-Lamp Fixture	300	0.300	1,111	1	Re-Lamp with (5) 10 Watt LED A19	50	0.050	185
PYMATUNING	MANAGER RESIDENCE DAN	36	INTERIOR		RESTROOM	2	60 Watt Incandescent A-Lamp Fixture	60	0.120	444	2	Re-Lamp with (1) 10 Watt LED A19	10	0.020	74
PYMATUNING	MANAGER RESIDENCE DAN	36	INTERIOR		RESTROOM	1	T12 2x2 2-Lamp Strip Fixture	42	0.042	156	1	Retrofit with (2) 10 Watt LED T8 2' Lamps; Direct Wire to Socket	20	0.020	74
PYMATUNING	MANAGER RESIDENCE DAN	36	INTERIOR		LIVING ROOM	2	40 Watt Incandescent 4-Lamp Fixture	160	0.320	1,185	2	Re-Lamp with (3) 7 Watt LED A19	21	0.042	156
PYMATUNING	MANAGER RESIDENCE DAN	36	INTERIOR		HALLWAY	1	60 Watt Incandescent A-Lamp Fixture	60	0.060	222	1	Re-Lamp with (1) 10 Watt LED A19	10	0.010	37
PYMATUNING	MANAGER RESIDENCE DAN	36	INTERIOR		BEDROOM	1	60 Watt Incandescent A-Lamp Fixture	60	0.060	222	1	Re-Lamp with (1) 10 Watt LED A19	10	0.010	37
PYMATUNING	MANAGER RESIDENCE DAN	36	INTERIOR		BEDROOM CLOSET	1	60 Watt Incandescent A-Lamp Fixture	60	0.060	60	1	Re-Lamp with (1) 10 Watt LED A19	10	0.010	10
PYMATUNING	MANAGER RESIDENCE DAN	36	INTERIOR		RESTROOM	1	T12 1x4 2-Lamp Industrial Strip Fixture	72	0.072	267	1	Retrofit with (2) 12.5 Watt LED T8 4' Lamps; Direct Wire to Socket	25	0.025	93
PYMATUNING	MANAGER RESIDENCE DAN	36	INTERIOR		RESTROOM SHOWER	1	T12 2x2 1-Lamp Strip Fixture	32	0.032	119	1	Retrofit with (1) 10 Watt LED T8 2' Lamp; Direct Wire to Socket	10	0.010	37
PYMATUNING	MANAGER RESIDENCE DAN	36	INTERIOR		BEDROOM	1	60 Watt Incandescent A-Lamp Fixture	60	0.060	222	1	Re-Lamp with (1) 10 Watt LED A19	10	0.010	37
PYMATUNING	MANAGER RESIDENCE DAN	36	INTERIOR		BEDROOM CLOSET	1	60 Watt Incandescent 4-Lamp Fixture	240	0.240	240	1	Re-Lamp with (4) 10 Watt LED A19	40	0.040	40
PYMATUNING	MANAGER RESIDENCE DAN	36	INTERIOR		BEDROOM	1	60 Watt Incandescent 4-Lamp Fixture	240	0.240	889	1	Re-Lamp with (4) 10 Watt LED A19	40	0.040	148
PYMATUNING	MANAGER RESIDENCE DAN	36	INTERIOR		BEDROOM	1	T12 2x2 1-Lamp Strip Fixture	32	0.032	119	1	Retrofit with (1) 10 Watt LED T8 2' Lamp; Direct Wire to Socket	10	0.010	37
PYMATUNING	MANAGER RESIDENCE DAN	36	INTERIOR		BEDROOM CLOSET	1	60 Watt Incandescent A-Lamp Fixture	60	0.060	60	1	Re-Lamp with (1) 10 Watt LED A19	10	0.010	10
PYMATUNING	MANAGER RESIDENCE DAN	36	INTERIOR		HALL CLOSET	1	100 Watt Incandescent A-Lamp Fixture	100	0.100	100	1	Re-Lamp with (1) 18 Watt LED A21	18	0.018	18
PYMATUNING	MANAGER RESIDENCE DAN	36	INTERIOR		HALL CLOSET	2	90 Watt Incandescent A-Lamp Fixture	90	0.180	180	2	Re-Lamp with (1) 18 Watt LED A21	18	0.036	36
PYMATUNING	MANAGER RESIDENCE DAN	36	EXTERIOR		PORCH	1	60 Watt Incandescent A-Lamp Fixture	60	0.060	263	1	Re-Lamp with (1) 10 Watt LED A19	10	0.010	44
PYMATUNING	MANAGER RESIDENCE DAN	36	EXTERIOR		PORCH	4	150 Watt Quartz Flood Fixture	150	0.600	2,628	4	New 26 Watt LED Flood Fixture	27	0.108	473
PYMATUNING	MANAGER RESIDENCE DAN	36	INTERIOR		GARAGE	2	T12 1x8 2-Lamp Strip Fixture with 60 Watt Lamps	123	0.246	246	2	Retrofit with (4) 12.5 Watt LED T8 4' Lamps and (1) 1x8 4-Lamp Strip Kit; Direct Wire to Socket	50	0.100	100
PYMATUNING	MANAGER RESIDENCE DAN	36	INTERIOR		GARAGE STORAGE	1	60 Watt Incandescent A-Lamp Fixture	60	0.060	60	1	Re-Lamp with (1) 10 Watt LED A19	10	0.010	10
PYMATUNING	MANAGER RESIDENCE DAN	36	EXTERIOR		FRONT PORCH	1	Existing LED Fixture; No Retrofit	40	0.040	175	1	No Retrofit	40	0.040	175
PYMATUNING	MANAGER RESIDENCE DAN	36	EXTERIOR		FRONT PORCH	1	175 Watt Mercury Vapor Dusk to Dawn Fixture	210	0.210	920	1	New 26 Watt LED Dusk to Dawn Barnyard Fixture	26	0.026	114
PYMATUNING	RESIDENCE DAM ROAD SHED SIDE	13	INTERIOR		SHED	2	60 Watt Incandescent A-Lamp Fixture	60	0.120	120	2	Re-Lamp with (1) 10 Watt LED A19	10	0.020	20
PYMATUNING	RESIDENCE DAM ROAD SHED SIDE	13	INTERIOR		SHED	1	60 Watt Incandescent A-Lamp Fixture	60	0.060	60	1	Re-Lamp with (1) 10 Watt LED A19	10	0.010	10
PYMATUNING	RESIDENCE DAM ROAD SHED SIDE	13	EXTERIOR		SHED	1	500 Watt 2-Head Quartz Flood	1000	1.000	4,380	1	(2) New 52 Watt LED Flood Fixtures	104	0.104	456
PYMATUNING	LINESVILLE BOAT LIVERY	91	INTERIOR		RESTROOM	1	Existing LED Fixture; No Retrofit	0	0.000	0	1	No Retrofit	0	0.000	0

©2013 Energy Systems Group, LLC

EXISTING FIXTURES												PROPOSED FIXTURE UPGRADE				
Park/Building Name	Building	Building #	Phase	Floor	Room Description	Qty	Description	Watts	kW	kWh	Qty	Description	Watts	kW	kWh
PYMATUNING	LINESVILLE BOAT LIVERY	91	INTERIOR		EXTERIOR	14	100 Watt Metal Halide 10' Downlight Fixture	125	1.750	4,830	14	Retrofit with 23 Watt LED 10' Downlight	23	0.322	889
PYMATUNING	LINESVILLE BOAT LIVERY	91	INTERIOR		PARKING	1	Existing LED Fixture; No Retrofit	100	0.100	276	1	No Retrofit	100	0.100	276
PYMATUNING	LINESVILLE BOAT LIVERY	91	INTERIOR		SMALL GARAGE	1	No Access; Area(s) Not Included in Scope/Pricing	0	0.000	0	1	No Retrofit	0	0.000	0
PYMATUNING	LINESVILLE BEACH CONTACT STATION	69	INTERIOR		OFFICE	1	T8 1wl 2-Lamp Wrap Fixture	62	0.062	171	1	Retrofit with (2) 12.5 Watt LED T8 4' Lamps; Direct Wire to Socket	25	0.025	69
PYMATUNING	LINESVILLE BEACH CONTACT STATION	69	EXTERIOR		SOFFIT	3	Existing LED Fixture; No Retrofit	10	0.030	131	3	No Retrofit	10	0.030	131
PYMATUNING	JAMESTOWN CAMP COMFORT STATION & SHOWER HOUSE JC 600 LOOP	35	INTERIOR		LAUNDRY	3	18 Watt Compact Fluorescent Fixture	18	0.054	149	3	Re-Lamp with (1) 10 Watt LED A19	10	0.030	83
PYMATUNING	JAMESTOWN CAMP COMFORT STATION & SHOWER HOUSE JC 500 LOOP	35	INTERIOR		MENS RESTROOM	3	T 12 1x4 2-Lamp Vaportight Fixture	72	0.216	596	3	Retrofit with (2) 12.5 Watt LED T8 4' Lamps; Direct Wire to Socket	25	0.075	207
PYMATUNING	JAMESTOWN CAMP COMFORT STATION & SHOWER HOUSE JC 600 LOOP	35	INTERIOR		MECHANICAL	3	18 Watt Compact Fluorescent Jelly Jar Fixture; Damaged	18	0.054	54	3	New 10 Watt LED A19 Jelly Jar	9	0.027	27
PYMATUNING	JAMESTOWN CAMP COMFORT STATION & SHOWER HOUSE JC 600 LOOP	35	INTERIOR		MECHANICAL	1	T 12 1x4 2-Lamp Vaportight Fixture	72	0.072	72	1	Retrofit with (2) 12.5 Watt LED T8 4' Lamps; Direct Wire to Socket	25	0.025	25
PYMATUNING	JAMESTOWN CAMP COMFORT STATION & SHOWER HOUSE JC 600 LOOP	35	INTERIOR		WOMENS RESTROOM	3	T 12 1x4 2-Lamp Vaportight Fixture	72	0.216	596	3	Retrofit with (2) 12.5 Watt LED T8 4' Lamps; Direct Wire to Socket	25	0.075	207
PYMATUNING	JAMESTOWN CAMP COMFORT STATION & SHOWER HOUSE JC 600 LOOP	35	INTERIOR		WOMENS RESTROOM	5	18 Watt Compact Fluorescent Fixture	18	0.090	248	5	Re-Lamp with (1) 10 Watt LED A19	10	0.050	138
PYMATUNING	SHELTER 2 RESTROOM COMFORT STATION	129	INTERIOR		MENS RESTROOM	2	T 12 1x4 2-Lamp Vaportight Fixture	72	0.144	397	2	Retrofit with (2) 12.5 Watt LED T8 4' Lamps; Direct Wire to Socket	25	0.050	138
PYMATUNING	SHELTER 2 RESTROOM COMFORT STATION	129	INTERIOR		WOMENS RESTROOM	2	T8 1x4 2-Lamp Vaportight Fixture	62	0.124	342	2	Retrofit with (2) 12.5 Watt LED T8 4' Lamps; Direct Wire to Socket	25	0.050	138
PYMATUNING	SHELTER 2 RESTROOM COMFORT STATION	129	INTERIOR		MECHANICAL	1	T8 1x4 2-Lamp Vaportight Fixture	62	0.062	62	1	Retrofit with (2) 12.5 Watt LED T8 4' Lamps; Direct Wire to Socket	25	0.025	25
PYMATUNING	SHELTER 2 RESTROOM COMFORT STATION	129	INTERIOR		MECHANICAL	1	26 Watt Compact Fluorescent Canopy Fixture	26	0.026	26	1	Re-Lamp with (1) 10 Watt LED A19	10	0.010	10
PYMATUNING	OLD MAINTENANCE	30	INTERIOR		BAY	3	T12 1x8 2-Lamp Strip Fixture with 60 Watt Lamps	123	0.369	960	3	Retrofit with (4) 12.5 Watt LED T8 4' Lamps and (1) 1x8 4-Lamp Strip Kit; Direct Wire to Socket	50	0.150	390
PYMATUNING	OLD MAINTENANCE	30	INTERIOR		BAY	3	T12 1x8 2-Lamp Strip Fixture with 60 Watt Lamps	123	0.369	960	3	Retrofit with (4) 12.5 Watt LED T8 4' Lamps and (1) 1x8 4-Lamp Strip Kit; Direct Wire to Socket	50	0.150	390
PYMATUNING	OLD MAINTENANCE	30	INTERIOR		STORAGE	1	T12 1x4 4-Lamp Wrap Fixture; Damaged	144	0.144	144	1	New 1x8 2-Lamp Wrap Fixture with (4) 12.5 Watt LED T8 4' Lamps; Direct Wire to Socket	50	0.050	50
PYMATUNING	OLD MAINTENANCE	30	INTERIOR		SHOP	4	T 12 1x4 2-Lamp Vaportight Fixture	72	0.288	749	4	Retrofit with (2) 12.5 Watt LED T8 4' Lamps; Direct Wire to Socket	25	0.100	260
PYMATUNING	OLD MAINTENANCE	30	INTERIOR		BAY	1	T12 1x8 2-Lamp Strip Fixture with 60 Watt Lamps	123	0.123	320	1	Retrofit with (4) 12.5 Watt LED T8 4' Lamps and (1) 1x8 4-Lamp Strip Kit; Direct Wire to Socket	50	0.050	130
PYMATUNING	OLD MAINTENANCE	30	INTERIOR		BAY	4	T12 1x8 2-Lamp Strip Fixture with 60 Watt Lamps	123	0.492	1,280	4	Retrofit with (4) 12.5 Watt LED T8 4' Lamps and (1) 1x8 4-Lamp Strip Kit; Direct Wire to Socket	50	0.200	520
PYMATUNING	OLD MAINTENANCE	30	EXTERIOR		EXTERIOR	3	90 Watt Incandescent PAR38 Fixture	90	0.270	1,183	3	Re-Lamp with (1) 17 Watt LED PAR38	17	0.051	223
PYMATUNING	OLD MAINTENANCE	30	EXTERIOR		EXTERIOR	1	90 Watt Incandescent PAR38 2-Lamp Fixture	180	0.180	788	1	Re-Lamp with (2) 17 Watt LED PAR38	34	0.034	149
PYMATUNING	SHOWERHOUSE JC 500 LOOP	115	INTERIOR		LAUNDRY	13	18 Watt Compact Fluorescent Fixture	18	0.234	1,072	13	Re-Lamp with (1) 10 Watt LED A19	10	0.130	596
PYMATUNING	SHOWERHOUSE JC 500 LOOP	115	INTERIOR		WOMENS RESTROOM	13	18 Watt Compact Fluorescent Fixture	18	0.234	1,072	13	Re-Lamp with (1) 10 Watt LED A19	10	0.130	596
PYMATUNING	SHOWERHOUSE JC 500 LOOP	115	INTERIOR		MENS RESTROOM	13	18 Watt Compact Fluorescent Fixture	18	0.234	1,072	13	Re-Lamp with (1) 10 Watt LED A19	10	0.130	596

©2013 Energy Systems Group, LLC

EXISTING FIXTURES											PROPOSED FIXTURE UPGRADE				
Park/Building Name	Building	Building #	Phase	Floor	Room Description	Qty	Description	Watts	kW	kWh	Qty	Description	Watts	kW	kWh
PYMATUNING	SHOWERHOUSE JC 500 LOOP	115	INTERIOR		MECHANICAL	3	26 Watt Compact Fluorescent Jelly Jar Fixture; Damaged	26	0.078	78	3	New 10 Watt LED A19 Jelly Jar	9	0.027	27
PYMATUNING	SHOWERHOUSE JC 500 LOOP	115	INTERIOR		MECHANICAL	1	T12 1x4 2-Lamp Vaportight Fixture	72	0.072	72	1	Retrofit with (2) 12.5 Watt LED T8 4' Lamps; Direct Wire to Socket	25	0.025	25
PYMATUNING	SHOWERHOUSE JC 500 LOOP	115	INTERIOR		MECHANICAL	5	18 Watt Compact Fluorescent Fixture	18	0.090	90	5	Re-Lamp with (1) 10 Watt LED A19	10	0.050	50
PYMATUNING	SHOWERHOUSE 400 LOOP	55	INTERIOR		LAUNDRY	3	18 Watt Compact Fluorescent Fixture	18	0.054	247	3	Re-Lamp with (1) 10 Watt LED A19	10	0.030	137
PYMATUNING	SHOWERHOUSE 400 LOOP	55	INTERIOR		MENS RESTROOM	13	Existing LED Fixture; No Retrofit	10	0.130	596	13	No Retrofit	10	0.130	596
PYMATUNING	SHOWERHOUSE 400 LOOP	55	INTERIOR		MECHANICAL	2	100 Watt Jelly Jar Fixture; Damaged	100	0.200	200	2	New 18 Watt LED A21 Jelly Jar Fixture	15	0.030	30
PYMATUNING	SHOWERHOUSE 400 LOOP	55	INTERIOR		MECHANICAL	1	18 Watt Compact Fluorescent Jelly Jar Fixture; Damaged	18	0.018	18	1	New 10 Watt LED A19 Jelly Jar	9	0.009	9
PYMATUNING	SHOWERHOUSE 400 LOOP	55	INTERIOR		WOMENS RESTROOM	13	Existing LED Fixture; No Retrofit	10	0.130	596	13	No Retrofit	10	0.130	596
PYMATUNING	SHOWERHOUSE 400 LOOP	55	EXTERIOR		EXTERIOR	5	Existing LED Fixture; No Retrofit	10	0.050	144	5	No Retrofit	10	0.050	144
PYMATUNING	CABIN LAUNDRY	133	INTERIOR		LAUNDRY	4	Existing LED Fixture; No Retrofit	40	0.160	593	4	No Retrofit	40	0.160	593
PYMATUNING	CABIN LAUNDRY	133	INTERIOR		LAUNDRY	3	T12 1x4 2-Lamp Vaportight Fixture	72	0.216	800	3	Retrofit with (2) 12.5 Watt LED T8 4' Lamps; Direct Wire to Socket	25	0.075	278
PYMATUNING	CABIN LAUNDRY	133	INTERIOR		STORAGE	4	13 Watt Compact Fluorescent Fixture	13	0.052	52	4	Re-Lamp with (1) 10 Watt LED A19	10	0.040	40
PYMATUNING	CABIN LAUNDRY	133	INTERIOR		STORAGE	1	25 Watt Incandescent 2-Lamp Exit Sign	50	0.050	438	1	New 3 watt LED Exit Sign	3	0.003	26
PYMATUNING	CABIN LAUNDRY	133	EXTERIOR		PORCH	1	Existing LED Fixture; No Retrofit	10	0.010	29	1	No Retrofit	10	0.010	29
PYMATUNING	CABIN	4	INTERIOR		LIVING ROOM	1	Existing LED Fixture; No Retrofit	30	0.030	111	1	No Retrofit	30	0.030	111
PYMATUNING	CABIN	4	INTERIOR		LIVING ROOM	1	Existing LED Fixture; No Retrofit	10	0.010	37	1	No Retrofit	10	0.010	37
PYMATUNING	CABIN	4	INTERIOR		SINK	1	Existing LED Fixture; No Retrofit	10	0.010	37	1	No Retrofit	10	0.010	37
PYMATUNING	CABIN	4	INTERIOR		HALLWAY	1	Existing LED Fixture; No Retrofit	20	0.020	74	1	No Retrofit	20	0.020	74
PYMATUNING	CABIN	4	INTERIOR		BUNK BED	1	Existing LED Fixture; No Retrofit	10	0.010	37	1	No Retrofit	10	0.010	37
PYMATUNING	CABIN	4	INTERIOR		BEDROOM	1	Existing LED Fixture; No Retrofit	10	0.010	37	1	No Retrofit	10	0.010	37
PYMATUNING	CABIN	4	INTERIOR		BEDROOM	1	Existing LED Fixture; No Retrofit	10	0.010	37	1	No Retrofit	10	0.010	37
PYMATUNING	CABIN	4	INTERIOR		BATHROOM	1	Existing LED Fixture; No Retrofit	10	0.010	37	1	No Retrofit	10	0.010	37
PYMATUNING	CABIN	4	INTERIOR		SHOWER	1	Existing LED Fixture; No Retrofit	10	0.010	37	1	No Retrofit	10	0.010	37
PYMATUNING	CABIN	4	INTERIOR		SINK	1	Existing LED Fixture; No Retrofit	10	0.010	37	1	No Retrofit	10	0.010	37
PYMATUNING	CABIN	4	INTERIOR		CABIN	2	Existing LED Fixture; No Retrofit	10	0.020	74	2	No Retrofit	10	0.020	74
PYMATUNING	CABIN	4	INTERIOR		CABIN	2	75 Watt Incandescent A-Lamp Fixture	75	0.150	556	2	Re-Lamp with (1) 10 Watt LED A19	10	0.020	74

©2013 Energy Systems Group, LLC

EXISTING FIXTURES												PROPOSED FIXTURE UPGRADE				
Park/Building Name	Building	Building #	Phase	Floor	Room Description	Qty	Description	Watts	kW	kWh	Qty	Description	Watts	kW	kWh
PYMATUNING	CABIN	4	EXTERIOR		PORCH	1	75 Watt Incandescent Canopy	75	0.075	329	1	New 10 Watt LED Canopy Fixture	12	0.012	53
PYMATUNING	ADAMS ROAD RESIDENCE	137	INTERIOR		KITCHEN	1	T12 1x4 4-Lamp Wrap Fixture	144	0.144	533	1	Retrofit with (4) 12.5 Watt LED T8 4' Lamps; Direct Wire to Socket	50	0.050	185
PYMATUNING	ADAMS ROAD RESIDENCE	137	INTERIOR		PORCH ROOM	1	75 Watt Incandescent 3-Lamp Fixture	225	0.225	833	1	Re-Lamp with (3) 10 Watt LED A19	30	0.030	111
PYMATUNING	ADAMS ROAD RESIDENCE	137	INTERIOR		DINING ROOM	1	26 Watt Compact Fluorescent 4-Lamp Fixture	104	0.104	385	1	Re-Lamp with (4) 10 Watt LED A19	40	0.040	148
PYMATUNING	ADAMS ROAD RESIDENCE	137	INTERIOR		LIVING ROOM	1	18 Watt Compat Fluorescent 4-Lamp Fixture	72	0.072	267	1	Re-Lamp with (4) 10 Watt LED A19	40	0.040	148
PYMATUNING	ADAMS ROAD RESIDENCE	137	INTERIOR		RESTROOM	1	75 Watt Incandescent A-Lamp Fixture	75	0.075	278	1	Re-Lamp with (1) 10 Watt LED A19	10	0.010	37
PYMATUNING	ADAMS ROAD RESIDENCE	137	INTERIOR		VANITY	4	Existing LED Fixture; No Retrofit	40	0.160	593	4	No Retrofit	40	0.160	593
PYMATUNING	ADAMS ROAD RESIDENCE	137	INTERIOR		BEDROOM	1	26 Watt Compact Fluorescent 4-Lamp Fixture	104	0.104	385	1	Re-Lamp with (4) 10 Watt LED A19	40	0.040	148
PYMATUNING	ADAMS ROAD RESIDENCE	137	INTERIOR		CLOSET	1	100 Watt Incandescent A-Lamp Fixture	100	0.100	100	1	Re-Lamp with (1) 18 Watt LED A21	18	0.018	18
PYMATUNING	ADAMS ROAD RESIDENCE	137	INTERIOR		CLOSET	1	100 Watt Incandescent A-Lamp Fixture	100	0.100	100	1	Re-Lamp with (1) 18 Watt LED A21	18	0.018	18
PYMATUNING	ADAMS ROAD RESIDENCE	137	INTERIOR		BEDROOM	1	13 Watt Compact Fluorescent 3-Lamp Fixture	39	0.039	144	1	Re-Lamp with (3) 10 Watt LED A19	30	0.030	111
PYMATUNING	ADAMS ROAD RESIDENCE	137	INTERIOR		CLOSET	1	13 Watt Compact Fluorescent Fixture	13	0.013	13	1	Re-Lamp with (1) 10 Watt LED A19	10	0.010	10
PYMATUNING	ADAMS ROAD RESIDENCE	137	INTERIOR		CLOSET	1	100 Watt Incandescent A-Lamp Fixture	100	0.100	100	1	Re-Lamp with (1) 18 Watt LED A21	18	0.018	18
PYMATUNING	ADAMS ROAD RESIDENCE	137	INTERIOR		BEDROOM	1	60 Watt Incandescent 3-Lamp Fixture	180	0.180	667	1	Re-Lamp with (3) 10 Watt LED A19	30	0.030	111
PYMATUNING	ADAMS ROAD RESIDENCE	137	INTERIOR		HALLWAY	1	18 Watt Compact Fluorescent Fixture	18	0.018	67	1	Re-Lamp with (1) 10 Watt LED A19	10	0.010	37
PYMATUNING	ADAMS ROAD RESIDENCE	137	INTERIOR		BASEMENT	1	T12 1x4 2-Lamp Wrap Fixture; Damaged	72	0.072	267	1	New 1x4 2-Lamp Wrap Fixture with (2) 12.5 Watt LED T8 4' Lamp; Direct Wire to Socket	25	0.025	93
PYMATUNING	ADAMS ROAD RESIDENCE	137	INTERIOR		BASEMENT	2	T12 1x4 2-Lamp Wrap Fixture	72	0.144	533	2	Retrofit with (2) 12.5 Watt LED T8 4' Lamps; Direct Wire to Socket	25	0.050	185
PYMATUNING	ADAMS ROAD RESIDENCE	137	INTERIOR		BASEMENT	1	T12 2x2 2-Lamp Strip Fixture	42	0.042	156	1	Retrofit with (2) 10 Watt LED T8 2' Lamps; Direct Wire to Socket	20	0.020	74
PYMATUNING	ADAMS ROAD RESIDENCE	137	INTERIOR		BASEMENT	1	T12 2x4 4-Lamp Troffer Fixture	144	0.144	533	1	Retrofit with (4) 12.5 Watt LED T8 4' Lamps; Direct Wire to Socket	50	0.050	185
PYMATUNING	ADAMS ROAD RESIDENCE	137	INTERIOR		BASEMENT	1	75 Watt Incandescent 2-Lamp Fixture	150	0.150	556	1	Re-Lamp with (2) 10 Watt LED A19	20	0.020	74
PYMATUNING	ADAMS ROAD RESIDENCE	137	INTERIOR		BACK ROOM	2	T12 1x4 2-Lamp Wrap Fixture	72	0.144	533	2	Retrofit with (2) 12.5 Watt LED T8 4' Lamps; Direct Wire to Socket	25	0.050	185
PYMATUNING	ADAMS ROAD RESIDENCE	137	EXTERIOR		EXTERIOR	1	150 Watt High Pressure Sodium Dusk to Dawn Fixture	188	0.188	823	1	New 26 Watt LED Dusk to Dawn Barnyard Fixture	26	0.026	114
PYMATUNING	ADAMS ROAD RESIDENCE	137	EXTERIOR		EXTERIOR	4	75 Watt Incandescent A-Lamp Fixture	75	0.300	1,314	4	Re-Lamp with (1) 10 Watt LED A19	10	0.040	175
PYMATUNING	ADAMS ROAD RESIDENCE	137	EXTERIOR		EXTERIOR	6	50 Watt Incandescent PAR30 Fixture	50	0.300	1,314	6	Re-Lamp with (1) 10 Watt LED PAR30	10	0.060	263
PYMATUNING	GARAGE RANGER STATION	1	INTERIOR		GARAGE DOOR OPENER	4	75 Watt Incandescent A-Lamp Fixture	75	0.300	300	4	Re-Lamp with (1) 10 Watt LED A19	10	0.040	40
PYMATUNING	GARAGE RANGER STATION	1	INTERIOR		GARAGE DOOR OPENER	2	75 Watt Incandescent A-Lamp Fixture	75	0.150	150	2	Re-Lamp with (1) 10 Watt LED A19	10	0.020	20

©2013 Energy Systems Group, LLC

EXISTING FIXTURES												PROPOSED FIXTURE UPGRADE				
Park/Building Name	Building	Building #	Phase	Floor	Room Description	Qty	Description	Watts	kW	kWh	Qty	Description	Watts	kW	kWh
PYMATUNING	GARAGE RANGER STATION	1	INTERIOR		GARAGE DOOR OPENER	1	T12 1x4 2-Lamp Wrap Fixture	72	0.072	72	1	Retrofit with (2) 12.5 Watt LED T8 4' Lamps; Direct Wire to Socket	25	0.025	25
PYMATUNING	LINESVILLE FISH CLEANING SHED	67	INTERIOR		ELECTRIC SHED	1	75 Watt Incandescent A-Lamp Jelly Jar Fixture	75	0.075	75	1	Re-Lamp with (1) 10 Watt LED A19	10	0.010	10
PYMATUNING	SHOWERHOUSE JC100 LOOP	93	INTERIOR		LAUNDRY	2	Existing LED Fixture; No Retrofit	10	0.020	92	2	No Retrofit	10	0.020	92
PYMATUNING	SHOWERHOUSE JC100 LOOP	93	INTERIOR		LAUNDRY	1	18 Watt Compact Fluorescent Fixture	18	0.018	82	1	Re-Lamp with (1) 10 Watt LED A19	10	0.010	46
PYMATUNING	SHOWERHOUSE JC100 LOOP	93	INTERIOR		MENS	6	Existing LED Fixture; No Retrofit	10	0.060	275	6	No Retrofit	10	0.060	275
PYMATUNING	SHOWERHOUSE JC100 LOOP	93	INTERIOR		MENS	7	18 Watt Compact Fluorescent Fixture	18	0.126	577	7	Re-Lamp with (1) 10 Watt LED A19	10	0.070	321
PYMATUNING	SHOWERHOUSE JC100 LOOP	93	INTERIOR		MECHANICAL	3	26 Watt Compact Fluorescent Jelly Jar Fixture; Damaged	26	0.078	78	3	New 10 Watt LED A19 Jelly Jar	9	0.027	27
PYMATUNING	SHOWERHOUSE JC100 LOOP	93	INTERIOR		MECHANICAL	6	18 Watt Compact Fluorescent Fixture	18	0.108	108	6	Re-Lamp with (1) 10 Watt LED A19	10	0.060	60
PYMATUNING	SHOWERHOUSE JC100 LOOP	93	INTERIOR		MECHANICAL	7	Existing LED Fixture; No Retrofit	10	0.070	70	7	No Retrofit	10	0.070	70
PYMATUNING	SHOWERHOUSE JC100 LOOP	93	EXTERIOR		EXTERIOR	3	18 Watt Compact Fluorescent Fixture	18	0.054	156	3	Re-Lamp with (1) 10 Watt LED A19	10	0.030	86
PYMATUNING	SHOWERHOUSE JC100 LOOP	93	EXTERIOR		EXTERIOR	2	Existing LED Fixture; No Retrofit	10	0.020	58	2	No Retrofit	10	0.020	58
PYMATUNING	JAMESTOWN CAMP STORE JC	146	INTERIOR		STORE	6	T12 2x4 4-Lamp Troffer Fixture	144	0.864	1,244	6	Retrofit with (4) 12.5 Watt LED T8 4' Lamps; Direct Wire to Socket	50	0.300	432
PYMATUNING	JAMESTOWN CAMP STORE JC	146	INTERIOR		STORE	3	T12 2x4 4-Lamp Troffer Fixture; Damaged	144	0.432	622	3	New 2x4 2-Lamp Lay-In Troffer Fixture with (2) 12.5 Watt LED T8 4' Lamp; Direct Wire to Socket	25	0.075	108
PYMATUNING	JAMESTOWN CAMP STORE JC	146	INTERIOR		STORE	1	T12 1x4 2-Lamp Wrap Fixture	72	0.072	104	1	Retrofit with (2) 12.5 Watt LED T8 4' Lamps; Direct Wire to Socket	25	0.025	36
PYMATUNING	JAMESTOWN CAMP STORE JC	146	INTERIOR		STORE	1	T12 1x4 2-Lamp Wrap Fixture; Damaged	72	0.072	104	1	New 1x4 2-Lamp Wrap Fixture with (2) 12.5 Watt LED T8 4' Lamp; Direct Wire to Socket	25	0.025	36
PYMATUNING	JAMESTOWN CAMP STORE JC	146	INTERIOR		BACK ROOM	1	T12 1x8 2-Lamp Strip Fixture with 60 Watt Lamps	123	0.123	177	1	Retrofit with (4) 12.5 Watt LED T8 4' Lamps and (1) 1x8 4-Lamp Strip Kit; Direct Wire to Socket	50	0.050	72
PYMATUNING	JAMESTOWN CAMP STORE JC	146	INTERIOR		BACK ROOM	1	T12 1x4 4-Lamp Wrap Fixture	144	0.144	207	1	Retrofit with (4) 12.5 Watt LED T8 4' Lamps; Direct Wire to Socket	50	0.050	72
PYMATUNING	JAMESTOWN CAMP STORE JC	146	INTERIOR		BACK ROOM	2	75 Watt Incandescent Jelly Jar Fixture; Damaged	75	0.150	216	2	New 18 Watt LED A21 Jelly Jar Fixture	15	0.030	43
PYMATUNING	JAMESTOWN CAMP STORE JC	146	INTERIOR		BACK ROOM	1	75 Watt Incandescent A-Lamp Fixture	75	0.075	108	1	Re-Lamp with (1) 10 Watt LED A19	10	0.010	14
PYMATUNING	JAMESTOWN CAMP STORE JC	146	INTERIOR		BACK ROOM	2	75 Watt Incandescent PAR38 2-Lamp	150	0.300	432	2	Re-Lamp with (2) 17 Watt LED PAR38	34	0.068	98
PYMATUNING	SHOWERHOUSE 300 JC LOOP	119	INTERIOR		LAUNDRY	13	Existing LED Fixture; No Retrofit	10	0.130	596	13	No Retrofit	10	0.130	596
PYMATUNING	SHOWERHOUSE 300 JC LOOP	119	INTERIOR		WOMENS RESTROOM	13	Existing LED Fixture; No Retrofit	10	0.130	596	13	No Retrofit	10	0.130	596
PYMATUNING	SHOWERHOUSE 300 JC LOOP	119	INTERIOR		MENS RESTROOM	13	Existing LED Fixture; No Retrofit	10	0.130	596	13	No Retrofit	10	0.130	596
PYMATUNING	SHOWERHOUSE 300 JC LOOP	119	INTERIOR		MECHANICAL	3	18 Watt Compact Fluorescent Jelly Jar Fixture; Damaged	18	0.054	247	3	New 10 Watt LED A19 Jelly Jar	9	0.027	124
PYMATUNING	SHOWERHOUSE 300 JC LOOP	119	EXTERIOR		EXTERIOR	5	Existing LED Fixture; No Retrofit	10	0.050	144	5	No Retrofit	10	0.050	144
PYMATUNING	SHOWERHOUSE JC 200 LOOP	47	INTERIOR		LAUNDRY	3	Existing LED Fixture; No Retrofit	10	0.030	137	3	No Retrofit	10	0.030	137

©2013 Energy Systems Group, LLC

EXISTING FIXTURES												PROPOSED FIXTURE UPGRADE				
Park/Building Name	Building	Building #	Phase	Floor	Room Description	Qty	Description	Watts	kW	kWh	Qty	Description	Watts	kW	kWh
PYMATUNING	SHOWERHOUSE JC 200 LOOP	47	INTERIOR		WOMENS RESTROOM	8	18 Watt Compact Fluorescent Jelly Jar	18	0.144	660	8	Re-Lamp with (1) 10 Watt LED A19	10	0.080	366
PYMATUNING	SHOWERHOUSE JC 200 LOOP	47	INTERIOR		WOMENS RESTROOM	5	18 Watt Compact Fluorescent Jelly Jar	18	0.090	412	5	Re-Lamp with (1) 10 Watt LED A19	10	0.050	229
PYMATUNING	SHOWERHOUSE JC 200 LOOP	47	INTERIOR		MENS RESTROOM	9	18 Watt Compact Fluorescent Jelly Jar	18	0.162	742	9	Re-Lamp with (1) 10 Watt LED A19	10	0.090	412
PYMATUNING	SHOWERHOUSE JC 200 LOOP	47	INTERIOR		MENS RESTROOM	1	18 Watt Compact Fluorescent Jelly Jar Fixture; Damaged	18	0.018	82	1	New 10 Watt LED A19 Jelly Jar	9	0.009	41
PYMATUNING	SHOWERHOUSE JC 200 LOOP	47	INTERIOR		MENS RESTROOM	3	18 Watt Compact Fluorescent Jelly Jar	18	0.054	247	3	Re-Lamp with (1) 10 Watt LED A19	10	0.030	137
PYMATUNING	SHOWERHOUSE JC 200 LOOP	47	INTERIOR		MECHANICAL	3	18 Watt Compact Fluorescent Jelly Jar Fixture; Damaged	18	0.054	54	3	New 10 Watt LED A19 Jelly Jar	9	0.027	27
PYMATUNING	SHOWERHOUSE JC 200 LOOP	47	EXTERIOR		EXTERIOR	5	18 Watt Compact Fluorescent Fixture	18	0.090	259	5	Re-Lamp with (1) 10 Watt LED A19	10	0.050	144
PYMATUNING	JAMESTOWN CAMP CONTACT STATION	7	INTERIOR		OFFICE	3	T8 1x4 3-Lamp Wrap Fixture	84	0.252	696	3	Retrofit with (3) 12.5 Watt LED T8 4' Lamps; Direct Wire to Socket	37.5	0.113	311
PYMATUNING	JAMESTOWN CAMP CONTACT STATION	7	INTERIOR		RESTROOM	1	T8 1x4 2-Lamp Vanity Fixture	62	0.062	171	1	Retrofit with (2) 12.5 Watt LED T8 4' Lamps; Direct Wire to Socket	25	0.025	69
PYMATUNING	JAMESTOWN CAMP CONTACT STATION	7	INTERIOR		DISPLAY	1	T8 1x4 1-Lamp Strip Fixture	30	0.030	83	1	Retrofit with (1) 12.5 Watt LED T8 4' Lamps; Direct Wire to Socket	12.5	0.013	35
PYMATUNING	JAMESTOWN CAMP CONTACT STATION	7	INTERIOR		MECHANICAL	1	T8 1x4 2-Lamp Wrap Fixture	62	0.062	62	1	Retrofit with (2) 12.5 Watt LED T8 4' Lamps; Direct Wire to Socket	25	0.025	25
PYMATUNING	JAMESTOWN CAMP CONTACT STATION	7	INTERIOR		KITCHENHALL	4	T8 1x4 2-Lamp Wrap Fixture	62	0.248	684	4	Retrofit with (2) 12.5 Watt LED T8 4' Lamps; Direct Wire to Socket	25	0.100	276
PYMATUNING	JAMESTOWN CAMP CONTACT STATION	7	EXTERIOR		EXTERIOR	5	50 Watt High Pressure Sodium 8" Downlight Fixture	70	0.350	1,008	5	Retrofit with 13 Watt LED 8" Downlight	13	0.065	187
PYMATUNING	JAMESTOWN CAMP CONTACT STATION	7	EXTERIOR		EXTERIOR	1	100 Watt High Pressure Sodium Fixture	125	0.125	360	1	Re-Lamp with (1) 27 Watt LED Omni-Cob Lamp; Hardwire Ballast	27	0.027	78
PYMATUNING	JAMESTOWN BOAT RENTAL AND ENVIRONMENTAL CLASSROOM	50	INTERIOR		CLASSROOM	28	T12 1x4 2-Lamp Strip Fixture	72	2.016	4,532	28	Retrofit with (2) 12.5 Watt LED T8 4' Lamps; Direct Wire to Socket	25	0.700	1,574
PYMATUNING	JAMESTOWN BOAT RENTAL AND ENVIRONMENTAL CLASSROOM	50	INTERIOR		CLASSROOM	19	13 Watt Compact Fluorescent R20 Fixture	13	0.247	555	19	Re-Lamp with (1) 8 Watt LED BR20	8	0.152	342
PYMATUNING	JAMESTOWN BOAT RENTAL AND ENVIRONMENTAL CLASSROOM	50	INTERIOR		VESTIBULE FRONT	1	T12 2x2 2-Lamp U-Lamp Troffer Fixture with 6" Lamps	72	0.072	162	1	Retrofit with (2) 10 Watt LED T8 2' Lamps and (1) 2x2 2-Lamp White Reflector Kit; Direct Wire to Socket	20	0.020	45
PYMATUNING	JAMESTOWN BOAT RENTAL AND ENVIRONMENTAL CLASSROOM	50	INTERIOR		VESTIBULE FRONT	1	25 Watt Incandescent 2-Lamp Exit Sign	50	0.050	438	1	New 3 watt LED Exit Sign	3	0.003	26
PYMATUNING	JAMESTOWN BOAT RENTAL AND ENVIRONMENTAL CLASSROOM	50	INTERIOR		VESTIBULE REAR	1	25 Watt Incandescent 2-Lamp Exit Sign	50	0.050	438	1	New 3 watt LED Exit Sign	3	0.003	26
PYMATUNING	JAMESTOWN BOAT RENTAL AND ENVIRONMENTAL CLASSROOM	50	INTERIOR		VESTIBULE REAR	1	T12 2x2 2-Lamp U-Lamp Troffer Fixture with 6" Lamps	72	0.072	162	1	Retrofit with (2) 10 Watt LED T8 2' Lamps and (1) 2x2 2-Lamp White Reflector Kit; Direct Wire to Socket	20	0.020	45
PYMATUNING	JAMESTOWN BOAT RENTAL AND ENVIRONMENTAL CLASSROOM	50	INTERIOR		RESTROOM HALL	1	T12 1x4 2-Lamp Vaportight Fixture	72	0.072	162	1	Retrofit with (2) 12.5 Watt LED T8 4' Lamps; Direct Wire to Socket	25	0.025	56
PYMATUNING	JAMESTOWN BOAT RENTAL AND ENVIRONMENTAL CLASSROOM	50	INTERIOR		MENS RESTROOM	4	T12 1x4 2-Lamp Vaportight Fixture	72	0.288	647	4	Retrofit with (2) 12.5 Watt LED T8 4' Lamps; Direct Wire to Socket	25	0.100	225
PYMATUNING	JAMESTOWN BOAT RENTAL AND ENVIRONMENTAL CLASSROOM	50	INTERIOR		WOMENS RESTROOM	4	T12 1x4 2-Lamp Vaportight Fixture	72	0.288	647	4	Retrofit with (2) 12.5 Watt LED T8 4' Lamps; Direct Wire to Socket	25	0.100	225
PYMATUNING	JAMESTOWN BOAT RENTAL AND ENVIRONMENTAL CLASSROOM	50	INTERIOR		MECHANICAL	1	23 Watt Compact Fluorescent Fixture	23	0.023	23	1	Re-Lamp with (1) 10 Watt LED A19	10	0.010	10
PYMATUNING	JAMESTOWN BOAT RENTAL AND ENVIRONMENTAL CLASSROOM	50	INTERIOR		KITCHEN PREP	4	T12 1x4 2-Lamp Vaportight Fixture	72	0.288	647	4	Retrofit with (2) 12.5 Watt LED T8 4' Lamps; Direct Wire to Socket	25	0.100	225
PYMATUNING	JAMESTOWN BOAT RENTAL AND ENVIRONMENTAL CLASSROOM	50	INTERIOR		KITCHEN	6	T12 1x4 2-Lamp Vaportight Fixture	72	0.432	971	6	Retrofit with (2) 12.5 Watt LED T8 4' Lamps; Direct Wire to Socket	25	0.150	337

©2013 Energy Systems Group, LLC

EXISTING FIXTURES												PROPOSED FIXTURE UPGRADE				
Park/Building Name	Building	Building #	Phase	Floor	Room Description	Qty	Description	Watts	kW	kWh	Qty	Description	Watts	kW	kWh
PYMATUNING	JAMESTOWN BOAT RENTAL AND ENVIRONMENTAL CLASSROOM	50	INTERIOR		KITCHEN	1	25 Watt Incandescent 2-Lamp Exit Sign	50	0.050	438	1	New 3 watt LED Exit Sign	3	0.003	26
PYMATUNING	JAMESTOWN BOAT RENTAL AND ENVIRONMENTAL CLASSROOM	50	INTERIOR		STORAGE	2	T12 1x4 2-Lamp Vaportight Fixture	72	0.144	144	2	Retrofit with (2) 12.5 Watt LED T8 4' Lamps; Direct Wire to Socket	25	0.050	50
PYMATUNING	JAMESTOWN BOAT RENTAL AND ENVIRONMENTAL CLASSROOM	50	INTERIOR		STORE	13	65 Watt Incandescent R30 Fixture	65	0.845	1,900	13	Re-Lamp with (1) 10 Watt LED BR30	10	0.130	292
PYMATUNING	JAMESTOWN BOAT RENTAL AND ENVIRONMENTAL CLASSROOM	50	INTERIOR		STORE	3	65 Watt Incandescent R30 Fixture	65	0.195	438	3	Re-Lamp with (1) 10 Watt LED BR30	10	0.030	67
PYMATUNING	JAMESTOWN BOAT RENTAL AND ENVIRONMENTAL CLASSROOM	50	INTERIOR		STORE RESTROOM	1	60 Watt Incandescent A-Lamp Fixture	60	0.060	31	1	Re-Lamp with (1) 10 Watt LED A19	10	0.010	5
PYMATUNING	JAMESTOWN BOAT RENTAL AND ENVIRONMENTAL CLASSROOM	50	INTERIOR		BOAT MAINTENANCE	14	T12 1x4 2-Lamp Wrap Fixture	72	1.008	2,266	14	Retrofit with (2) 12.5 Watt LED T8 4' Lamps; Direct Wire to Socket	25	0.350	787
PYMATUNING	JAMESTOWN BOAT RENTAL AND ENVIRONMENTAL CLASSROOM	50	INTERIOR		BOAT MAINTENANCE	1	T12 1x4 2-Lamp Industrial Strip Fixture	72	0.072	162	1	Retrofit with (2) 12.5 Watt LED T8 4' Lamps; Direct Wire to Socket	25	0.025	56
PYMATUNING	JAMESTOWN BOAT RENTAL AND ENVIRONMENTAL CLASSROOM	50	INTERIOR		MECHANICAL	2	T12 1x4 2-Lamp Wrap Fixture	72	0.144	144	2	Retrofit with (2) 12.5 Watt LED T8 4' Lamps; Direct Wire to Socket	25	0.050	50
PYMATUNING	JAMESTOWN BOAT RENTAL AND ENVIRONMENTAL CLASSROOM	50	EXTERIOR		EXTERIOR	4	60 Watt Incandescent A-Lamp Jelly Jar Fixture	60	0.240	691	4	Re-Lamp with (1) 10 Watt LED A19	10	0.040	115
PYMATUNING	JAMESTOWN BOAT RENTAL AND ENVIRONMENTAL CLASSROOM	50	EXTERIOR		EXTERIOR	2	150 Watt High Pressure Sodium Wall Pack Fixture	188	0.376	1,083	2	New 37 Watt LED Wall Pack Fixture; Non-Dark Sky	39	0.078	225
PYMATUNING	JAMESTOWN BOAT RENTAL AND ENVIRONMENTAL CLASSROOM	50	EXTERIOR		EXTERIOR	10	250 Watt High Pressure Sodium Flood Fixture	300	3.000	8,640	10	New 125 Watt LED Flood Fixture	133	1.330	3,830
PYMATUNING	JAMESTOWN BOAT RENTAL AND ENVIRONMENTAL CLASSROOM	50	EXTERIOR		EXTERIOR	1	Existing LED Fixture; No Retrofit	30	0.030	86	1	No Retrofit	30	0.030	86
PYMATUNING	MARINA STORAGE GARAGE	50	INTERIOR		STORAGE	1	T12 2x4 4-Lamp Troffer Fixture	144	0.144	144	1	Retrofit with (4) 12.5 Watt LED T8 4' Lamps; Direct Wire to Socket	50	0.050	50
PYMATUNING	MARINA STORAGE GARAGE	50	INTERIOR		LARGE STORAGE	6	T12 2x4 4-Lamp Troffer Fixture	144	0.864	864	6	Retrofit with (4) 12.5 Watt LED T8 4' Lamps; Direct Wire to Socket	50	0.300	300
PYMATUNING	MARINA RESTROOMS	50	INTERIOR		MENS RESTROOM	6	T8 2x2 1-Lamp Vanity Fixture	22	0.132	605	6	Retrofit with (1) 10 Watt LED T8 2' Lamp; Direct Wire to Socket	10	0.060	275
PYMATUNING	MARINA RESTROOMS	50	INTERIOR		WOMENS RESTROOM	3	T8 2x2 1-Lamp Vanity Fixture	22	0.066	302	3	Retrofit with (1) 10 Watt LED T8 2' Lamp; Direct Wire to Socket	10	0.030	137
PYMATUNING	MARINA RESTROOMS	50	INTERIOR		WOMENS RESTROOM	6	T8 2x2 1-Lamp Vanity Fixture	22	0.132	605	6	Retrofit with (1) 10 Watt LED T8 2' Lamp; Direct Wire to Socket	10	0.060	275
PYMATUNING	MARINA RESTROOMS	50	INTERIOR		PIPECHASE	3	T8 2x2 1-Lamp Vanity Fixture	22	0.066	66	3	Retrofit with (1) 10 Watt LED T8 2' Lamp; Direct Wire to Socket	10	0.030	30
PYMATUNING	MARINA RESTROOMS	50	EXTERIOR		EXTERIOR	4	100 Watt High Pressure Sodium Wall Pack Fixture	125	0.500	1,440	4	New 24 Watt LED Wall Pack Fixture; Non-Dark Sky	25	0.100	288
PYMATUNING	JAMESTOWN MAINTENANCE WATER TREATMENT	33	INTERIOR		BUILDING	8	T8 2x2 1-Lamp Vanity Fixture	22	0.176	458	8	Retrofit with (1) 10 Watt LED T8 2' Lamp; Direct Wire to Socket	10	0.080	208
PYMATUNING	JAMESTOWN MAINTENANCE WATER TREATMENT	33	INTERIOR		BUILDING	1	Circline Fixture; No Retrofit	30	0.030	78	1	No Retrofit	30	0.030	78
PYMATUNING	JAMESTOWN MAINTENANCE WATER TREATMENT	33	EXTERIOR		EXTERIOR	4	100 Watt High Pressure Sodium Wall Pack Fixture	125	0.500	2,190	4	New 24 Watt LED Wall Pack Fixture; Non-Dark Sky	25	0.100	438
PYMATUNING	MAINTENANCE BUILDING	145	INTERIOR		BREAK ROOM	6	Existing LED Fixture; No Retrofit	40	0.240	624	6	No Retrofit	40	0.240	624
PYMATUNING	MAINTENANCE BUILDING	145	INTERIOR		WORK BAY	9	T12 1x4 2-Lamp Industrial Strip Fixture	72	0.648	1,685	9	Retrofit with (2) 12.5 Watt LED T8 4' Lamps; Direct Wire to Socket	25	0.225	585
PYMATUNING	MAINTENANCE BUILDING	145	INTERIOR		SHOP BAY	7	T12 1x4 2-Lamp Industrial Strip Fixture	72	0.504	1,311	7	Retrofit with (2) 12.5 Watt LED T8 4' Lamps; Direct Wire to Socket	25	0.175	455
PYMATUNING	MAINTENANCE BUILDING	145	INTERIOR		END BAY	6	T12 1x4 2-Lamp Vaportight Fixture	72	0.432	1,124	6	Retrofit with (2) 12.5 Watt LED T8 4' Lamps; Direct Wire to Socket	25	0.150	390

©2013 Energy Systems Group, LLC

EXISTING FIXTURES											PROPOSED FIXTURE UPGRADE				
Park/Building Name	Building	Building #	Phase	Floor	Room Description	Qty	Description	Watts	kW	kWh	Qty	Description	Watts	kW	kWh
PYMATUNING	MAINTENANCE BUILDING	145	INTERIOR		END BAY	1	T12 1x4 4-Lamp Wrap Fixture; Damaged	144	0.144	375	1	New 1x8 2-Lamp Wrap Fixture with (4) 12.5 Watt LED T8 4' Lamps; Direct Wire to Socket	50	0.050	130
PYMATUNING	MAINTENANCE BUILDING	145	INTERIOR		SHOP BAY	2	T12 1x4 2-Lamp Industrial Strip Fixture	72	0.144	375	2	Retrofit with (2) 12.5 Watt LED T8 4' Lamps; Direct Wire to Socket	25	0.050	130
PYMATUNING	MAINTENANCE BUILDING	145	INTERIOR		SHOP BAY	2	T12 1x4 2-Lamp Vaportight Fixture	72	0.144	375	2	Retrofit with (2) 12.5 Watt LED T8 4' Lamps; Direct Wire to Socket	25	0.050	130
PYMATUNING	MAINTENANCE BUILDING	145	INTERIOR		REAR COMP BAY	2	T12 1x4 2-Lamp Industrial Strip Fixture	72	0.144	375	2	Retrofit with (2) 12.5 Watt LED T8 4' Lamps; Direct Wire to Socket	25	0.050	130
PYMATUNING	MAINTENANCE BUILDING	145	INTERIOR		STORAGE/OFFICE	7	T12 1x4 2-Lamp Industrial Strip Fixture	72	0.504	504	7	Retrofit with (2) 12.5 Watt LED T8 4' Lamps; Direct Wire to Socket	25	0.175	175
PYMATUNING	MAINTENANCE BUILDING	145	INTERIOR		STORAGE/OFFICE	1	T12 1x4 2-Lamp Industrial Strip Fixture	72	0.072	72	1	Retrofit with (2) 12.5 Watt LED T8 4' Lamps; Direct Wire to Socket	25	0.025	25
PYMATUNING	MAINTENANCE BUILDING	145	INTERIOR		PARTS	1	75 Watt Incandescent Explosion Proof Fixture	75	0.075	75	1	Relamp with (1) 10 Watt LED A19; Difficult Access	10	0.010	10
PYMATUNING	MAINTENANCE BUILDING	145	INTERIOR		WOMENS RESTROOM	1	23 Watt Compact Fluorescent Fixture	23	0.023	60	1	Re-Lamp with (1) 10 Watt LED A19	10	0.010	26
PYMATUNING	MAINTENANCE BUILDING	145	INTERIOR		WOMENS RESTROOM	1	T12 1x4 2-Lamp Vaportight Fixture	72	0.072	187	1	Retrofit with (2) 12.5 Watt LED T8 4' Lamps; Direct Wire to Socket	25	0.025	65
PYMATUNING	MAINTENANCE BUILDING	145	INTERIOR		PARTS	6	T12 1x4 2-Lamp Industrial Strip Fixture	72	0.432	1,124	6	Retrofit with (2) 12.5 Watt LED T8 4' Lamps; Direct Wire to Socket	25	0.150	390
PYMATUNING	MAINTENANCE BUILDING	145	INTERIOR		WOOD SHOP	6	T12 1x4 2-Lamp Industrial Strip Fixture	72	0.432	1,124	6	Retrofit with (2) 12.5 Watt LED T8 4' Lamps; Direct Wire to Socket	25	0.150	390
PYMATUNING	MAINTENANCE BUILDING	145	INTERIOR		MENS RESTROOM	3	Existing LED Fixture; No Retrofit	40	0.120	312	3	No Retrofit	40	0.120	312
PYMATUNING	MAINTENANCE BUILDING	145	INTERIOR		WELD SHOP	2	T12 2x4 4-Lamp Surface Mount Fixture	144	0.288	749	2	Retrofit with (4) 12.5 Watt LED T8 4' Lamps; Direct Wire to Socket	50	0.100	260
PYMATUNING	MAINTENANCE BUILDING	145	EXTERIOR		EXTERIOR	4	150 Watt High Pressure Sodium Wall Pack Fixture	188	0.752	3,294	4	New 37 Watt LED Wall Pack Fixture; Non-Dark Sky	39	0.156	683
PYMATUNING	MAINTENANCE BUILDING	145	EXTERIOR		EXTERIOR	1	Existing LED Fixture; No Retrofit	20	0.020	88	1	No Retrofit	20	0.020	88
PYMATUNING	MAINTENANCE BUILDING	145	INTERIOR		GARAGE	12	T12 1x4 2-Lamp Industrial Strip Fixture	72	0.864	2,247	12	Retrofit with (2) 12.5 Watt LED T8 4' Lamps; Direct Wire to Socket	25	0.300	780
PYMATUNING	MAINTENANCE BUILDING	145	EXTERIOR		EXTERIOR	2	150 Watt High Pressure Sodium Wall Pack Fixture	188	0.376	1,647	2	New 37 Watt LED Wall Pack Fixture; Non-Dark Sky	39	0.078	342
PYMATUNING	WIER COMFORT STATION	108	INTERIOR		MENS RESTROOM	2	T8 1x4 2-Lamp Vaportight Fixture	62	0.124	342	2	Retrofit with (2) 12.5 Watt LED T8 4' Lamps; Direct Wire to Socket	25	0.050	138
PYMATUNING	WIER COMFORT STATION	108	INTERIOR		WOMENS RESTROOM	2	T8 1x4 2-Lamp Vaportight Fixture	62	0.124	342	2	Retrofit with (2) 12.5 Watt LED T8 4' Lamps; Direct Wire to Socket	25	0.050	138
PYMATUNING	WIER COMFORT STATION	108	INTERIOR		WOMENS RESTROOM	1	26 Watt Compact Fluorescent Canopy Fixture	26	0.026	72	1	Re-Lamp with (1) 10 Watt LED A19	10	0.010	28
PYMATUNING	WIER COMFORT STATION	108	INTERIOR		MECHANICAL	1	T8 1x4 2-Lamp Vaportight Fixture; Damaged	62	0.062	62	1	New 1x4 2-Lamp Vaportight Fixture with (2) 12.5 Watt LED T8 4' Lamp; Direct Wire to Socket	25	0.025	25
PYMATUNING	WIER COMFORT STATION	108	INTERIOR		MECHANICAL	1	T8 1x4 2-Lamp Vaportight Fixture	62	0.062	62	1	Retrofit with (2) 12.5 Watt LED T8 4' Lamps; Direct Wire to Socket	25	0.025	25
PYMATUNING	PARK OFFICE	37	INTERIOR		LUNCH ROOM	2	T12 2x4 4-Lamp Surface Mount Fixture	144	0.288	647	2	Retrofit with (4) 12.5 Watt LED T8 4' Lamps; Direct Wire to Socket	50	0.100	225
PYMATUNING	PARK OFFICE	37	INTERIOR		WOMENS RESTROOM	1	Existing LED Fixture; No Retrofit	40	0.040	21	1	No Retrofit	40	0.040	21
PYMATUNING	PARK OFFICE	37	INTERIOR		MENS RESTROOM	1	T12 1x4 2-Lamp Wrap Fixture; Damaged	72	0.072	38	1	New 1x4 2-Lamp Wrap Fixture with (2) 12.5 Watt LED T8 4' Lamp; Direct Wire to Socket	25	0.025	13
PYMATUNING	PARK OFFICE	37	INTERIOR		HALLWAY	1	T12 1x4 2-Lamp Wrap Fixture	72	0.072	162	1	Retrofit with (2) 12.5 Watt LED T8 4' Lamps; Direct Wire to Socket	25	0.025	56

©2013 Energy Systems Group, LLC

EXISTING FIXTURES												PROPOSED FIXTURE UPGRADE				
Park/Building Name	Building	Building #	Phase	Floor	Room Description	Qty	Description	Watts	kW	kWh	Qty	Description	Watts	kW	kWh
PYMATUNING	PARK OFFICE	37	INTERIOR		KITCHEN	1	T12 1x4 2-Lamp Wrap Fixture	72	0.072	162	1	Retrofit with (2) 12.5 Watt LED T8 4' Lamps; Direct Wire to Socket	25	0.025	56
PYMATUNING	PARK OFFICE	37	INTERIOR		STORAGE	4	T12 2x4 4-Lamp Surface Mount Fixture	144	0.576	576	4	Retrofit with (4) 12.5 Watt LED T8 4' Lamps; Direct Wire to Socket	50	0.200	200
PYMATUNING	PARK OFFICE	37	INTERIOR		OFFICE	1	T12 2x4 4-Lamp Surface Mount Fixture	144	0.144	324	1	Retrofit with (4) 12.5 Watt LED T8 4' Lamps; Direct Wire to Socket	50	0.050	112
PYMATUNING	PARK OFFICE	37	INTERIOR		OFFICE	7	Existing LED Fixture; No Retrofit	40	0.280	629	7	No Retrofit	40	0.280	629
PYMATUNING	PARK OFFICE	37	INTERIOR		OFFICE	2	T12 2x4 4-Lamp Surface Mount Fixture	144	0.288	647	2	Retrofit with (4) 12.5 Watt LED T8 4' Lamps; Direct Wire to Socket	50	0.100	225
PYMATUNING	PARK OFFICE	37	INTERIOR		OFFICE	2	T12 2x4 4-Lamp Surface Mount Fixture	144	0.288	647	2	Retrofit with (4) 12.5 Watt LED T8 4' Lamps; Direct Wire to Socket	50	0.100	225
PYMATUNING	PARK OFFICE	37	INTERIOR		STORAGE	2	T12 1x4 2-Lamp Wrap Fixture; Damaged	72	0.144	144	2	New 1x4 2-Lamp Wrap Fixture with (2) 12.5 Watt LED T8 4' Lamp; Direct Wire to Socket	25	0.050	50
PYMATUNING	PARK OFFICE	37	INTERIOR		OFFICE	2	T12 2x4 4-Lamp Surface Mount Fixture	144	0.288	647	2	Retrofit with (4) 12.5 Watt LED T8 4' Lamps; Direct Wire to Socket	50	0.100	225
PYMATUNING	PARK OFFICE	37	INTERIOR		OFFICE	2	Existing LED Fixture; No Retrofit	40	0.080	180	2	No Retrofit	40	0.080	180
PYMATUNING	PARK OFFICE	37	INTERIOR		LOBBY STORE	6	T12 2x4 2-Lamp Surface Mount Fixture	78	0.468	1,052	6	Retrofit with (2) 12.5 Watt LED T8 4' Lamps; Direct Wire to Socket	25	0.150	337
PYMATUNING	PARK OFFICE	37	INTERIOR		DISPLAY	2	T12 2x3 1-Lamp Under Cabinet Wrap Fixture	47	0.094	211	2	No Retrofit	47	0.094	211
PYMATUNING	PARK OFFICE	37	INTERIOR		DISPLAY	5	T12 2x3 1-Lamp Under Cabinet Wrap Fixture	47	0.235	528	5	No Retrofit	47	0.235	528
PYMATUNING	PARK OFFICE	37	INTERIOR		HALLWAY	1	T12 1x4 2-Lamp Surface Mount Fixture	72	0.072	162	1	Retrofit with (2) 12.5 Watt LED T8 4' Lamps; Direct Wire to Socket	25	0.025	56
PYMATUNING	PARK OFFICE	37	INTERIOR		MENS RESTROOM	1	Existing LED Fixture; No Retrofit	40	0.040	21	1	No Retrofit	40	0.040	21
PYMATUNING	PARK OFFICE	37	INTERIOR		BOILER	2	T12 1x4 2-Lamp Industrial Strip Fixture	72	0.144	144	2	Retrofit with (2) 12.5 Watt LED T8 4' Lamps; Direct Wire to Socket	25	0.050	50
PYMATUNING	PARK OFFICE	37	INTERIOR		WOMENS RESTROOM	1	Existing LED Fixture; No Retrofit	40	0.040	21	1	No Retrofit	40	0.040	21
PYMATUNING	PARK OFFICE	37	INTERIOR		LOBBY	1	25 Watt Incandescent 2-Lamp Exit Sign	50	0.050	438	1	New 3 watt LED Exit Sign	3	0.003	26
PYMATUNING	PARK OFFICE	37	EXTERIOR		EXTERIOR	5	150 Watt High Pressure Sodium Wall Pack Fixture	188	0.940	4,117	5	New 37 Watt LED Wall Pack Fixture; Non-Dark Sky	39	0.195	854
PYMATUNING	PARK OFFICE	37	EXTERIOR		EXTERIOR	4	175 Watt Mercury Vapor Shoebox Fixture	210	0.840	3,679	4	New 78 Watt LED Shoebox Fixture	78	0.312	1,367
PYMATUNING	LINESVILLE CABINS ELECTRIC	25	INTERIOR		CABIN	1	75 Watt Incandescent A-Lamp Fixture	75	0.075	75	1	Re-Lamp with (1) 10 Watt LED A19	10	0.010	10
PYMATUNING	LINESVILLE MAINTENANCE GARAGE 123	154	INTERIOR		STORAGE	1	T12 1x4 4-Lamp Wrap Fixture; Damaged	144	0.144	144	1	New 1x8 2-Lamp Wrap Fixture with (4) 12.5 Watt LED T8 Lamps; Direct Wire to Socket	50	0.050	50
PYMATUNING	LINESVILLE MAINTENANCE GARAGE 123	154	INTERIOR		STORAGE	1	T12 1x8 2-Lamp Strip Fixture with 60 Watt Lamps	123	0.123	123	1	Retrofit with (4) 12.5 Watt LED T8 4' Lamps and (1) 1x8 4-Lamp Strip Kit; Direct Wire to Socket	50	0.050	50
PYMATUNING	LINESVILLE MAINTENANCE GARAGE 123	154	EXTERIOR		EXTERIOR	1	175 Watt Mercury Vapor Dusk to Dawn Fixture	210	0.210	920	1	New 26 Watt LED Dusk to Dawn Barnyard Fixture	26	0.026	114
PYMATUNING	LINESVILLE BEACH COMFORT STATION	69	INTERIOR		WOMENS RESTROOM	2	Existing LED Fixture; No Retrofit	40	0.080	221	2	No Retrofit	40	0.080	221
PYMATUNING	LINESVILLE BEACH COMFORT STATION	69	INTERIOR		MECHANICAL	2	13 Watt Compact Fluorescent Fixture	13	0.026	26	2	Re-Lamp with (1) 10 Watt LED A19	10	0.020	20
PYMATUNING	LINESVILLE BEACH COMFORT STATION	69	INTERIOR		MECHANICAL	2	26 Watt Compact Fluorescent Fixture	26	0.052	52	2	Re-Lamp with (1) 10 Watt LED A19	10	0.020	20

©2013 Energy Systems Group, LLC

EXISTING FIXTURES												PROPOSED FIXTURE UPGRADE				
Park/Building Name	Building	Building #	Phase	Floor	Room Description	Qty	Description	Watts	kW	kWh	Qty	Description	Watts	kW	kWh
PYMATUNING	LINESVILLE BEACH COMFORT STATION	69	INTERIOR		MECHANICAL	1	100 Watt High Pressure Sodium Canopy Fixture	125	0.125	125	1	Re-Lamp with (1) 27 Watt LED Omni-Cob Lamp; Hardwire Ballast	27	0.027	27
PYMATUNING	LINESVILLE BEACH COMFORT STATION	69	INTERIOR		MENS RESTROOM	2	Existing LED Fixture; No Retrofit	40	0.080	221	2	No Retrofit	40	0.080	221
PYMATUNING	LINESVILLE BEACH COMFORT STATION	69	INTERIOR		MENS RESTROOM	2	18 Watt Compact Fluorescent Canopy Fixture	18	0.036	99	2	Re-Lamp with (1) 10 Watt LED A19	10	0.020	55
PYMATUNING	LINESVILLE CAMPGROUND COMFORT STATION	28	INTERIOR		MENS RESTROOM	2	T8 1x4 2-Lamp Vaportight Fixture	62	0.124	342	2	Retrofit with (2) 12.5 Watt LED T8 4' Lamps; Direct Wire to Socket	25	0.050	138
PYMATUNING	LINESVILLE CAMPGROUND COMFORT STATION	28	INTERIOR		WOMENS RESTROOM	1	T8 1x4 2-Lamp Vaportight Fixture	62	0.062	171	1	Retrofit with (2) 12.5 Watt LED T8 4' Lamps; Direct Wire to Socket	25	0.025	69
PYMATUNING	LINESVILLE CAMPGROUND COMFORT STATION	28	INTERIOR		WOMENS RESTROOM	1	T12 1x4 2-Lamp Vaportight Fixture	72	0.072	199	1	Retrofit with (2) 12.5 Watt LED T8 4' Lamps; Direct Wire to Socket	25	0.025	69
PYMATUNING	LINESVILLE CAMPGROUND COMFORT STATION	28	INTERIOR		MECHANICAL	2	T8 1x4 2-Lamp Vaportight Fixture	62	0.124	124	2	Retrofit with (2) 12.5 Watt LED T8 4' Lamps; Direct Wire to Socket	25	0.050	50
PYMATUNING	LINESVILLE CAMPGROUND COMFORT STATION	28	INTERIOR		MECHANICAL	1	26 Watt Compact Fluorescent Canopy Fixture	26	0.026	26	1	Re-Lamp with (1) 10 Watt LED A19	10	0.010	10
PYMATUNING	LINESVILLE FISH CLEANING STATION	67	INTERIOR		FISH CLEANING	2	T12 1x4 2-Lamp Vaportight Fixture	72	0.144	397	2	Retrofit with (2) 12.5 Watt LED T8 4' Lamps; Direct Wire to Socket	25	0.050	138
PYMATUNING	RESIDENCE GARAGE FORD ISLAND	98	INTERIOR		GARAGE	4	75 Watt Incandescent A-Lamp Fixture	75	0.300	780	4	Re-Lamp with (1) 10 Watt LED A19	10	0.040	104
PYMATUNING	FORD ISLAND RESIDENCE	84	INTERIOR		PORCH	3	75 Watt Incandescent A-Lamp Fixture	75	0.225	833	3	Re-Lamp with (1) 10 Watt LED A19	10	0.030	111
PYMATUNING	FORD ISLAND RESIDENCE	84	INTERIOR		HALLWAY	1	18 Watt Compact Fluorescent 2-Lamp Fixture	36	0.036	133	1	Re-Lamp with (2) 10 Watt LED A19	20	0.020	74
PYMATUNING	FORD ISLAND RESIDENCE	84	INTERIOR		RESTROOM	1	Existing LED Fixture; No Retrofit	40	0.040	148	1	No Retrofit	40	0.040	148
PYMATUNING	FORD ISLAND RESIDENCE	84	INTERIOR		DINING ROOM	1	13 Watt Compact Fluorescent 5-Lamp Fixture	65	0.065	241	1	Re-Lamp with (5) 10 Watt LED A19	50	0.050	185
PYMATUNING	FORD ISLAND RESIDENCE	84	INTERIOR		KITCHEN	3	Existing LED Fixture; No Retrofit	30	0.090	333	3	No Retrofit	30	0.090	333
PYMATUNING	FORD ISLAND RESIDENCE	84	INTERIOR		KITCHEN	1	T8 1x4 2-Lamp Wrap Fixture; Damaged	62	0.062	230	1	New 1x4 2-Lamp Wrap Fixture with (2) 12.5 Watt LED T8 4' Lamp; Direct Wire to Socket	25	0.025	93
PYMATUNING	FORD ISLAND RESIDENCE	84	INTERIOR		LIVING ROOM	2	18 Watt Compact Fluorescent 3-Lamp Fixture	54	0.108	400	2	Re-Lamp with (3) 10 Watt LED A19	30	0.060	222
PYMATUNING	FORD ISLAND RESIDENCE	84	INTERIOR		LIVING ROOM	2	Existing LED Fixture; No Retrofit	10	0.020	74	2	No Retrofit	10	0.020	74
PYMATUNING	FORD ISLAND RESIDENCE	84	INTERIOR		FRONT HALLWAY	1	13 Watt Compact Fluorescent Fixture	13	0.013	48	1	Re-Lamp with (1) 10 Watt LED A19	10	0.010	37
PYMATUNING	FORD ISLAND RESIDENCE	84	INTERIOR		MASTER BEDROOM	2	13 Watt Compact Fluorescent 2-Lamp Fixture	26	0.052	193	2	Re-Lamp with (2) 10 Watt LED A19	20	0.040	148
PYMATUNING	FORD ISLAND RESIDENCE	84	INTERIOR		RESTROOM	1	75 Watt Incandescent 5-Lamp Globe Fixture	375	0.375	1,389	1	Re-Lamp with (5) 8 Watt LED G25 Globe	40	0.040	148
PYMATUNING	FORD ISLAND RESIDENCE	84	INTERIOR		BEDROOM	1	13 Watt Compact Fluorescent 2-Lamp Fixture	26	0.026	96	1	Re-Lamp with (2) 10 Watt LED A19	20	0.020	74
PYMATUNING	FORD ISLAND RESIDENCE	84	INTERIOR		BEDROOM	1	13 Watt Compact Fluorescent 4-Lamp Fixture	52	0.052	193	1	Re-Lamp with (4) 10 Watt LED A19	40	0.040	148
PYMATUNING	FORD ISLAND RESIDENCE	84	INTERIOR		ATTIC	2	75 Watt Incandescent A-Lamp Fixture	75	0.150	150	2	Re-Lamp with (1) 10 Watt LED A19	10	0.020	20
PYMATUNING	FORD ISLAND RESIDENCE	84	INTERIOR		CLOSET	1	75 Watt Incandescent A-Lamp Fixture	75	0.075	75	1	Re-Lamp with (1) 10 Watt LED A19	10	0.010	10
PYMATUNING	FORD ISLAND RESIDENCE	84	INTERIOR		BASEMENT	1	T8 1x4 2-Lamp Vaportight Fixture; Damaged	62	0.062	230	1	New 1x4 2-Lamp Vaportight Fixture with (2) 12.5 Watt LED T8 4' Lamp; Direct Wire to Socket	25	0.025	93

©2013 Energy Systems Group, LLC

EXISTING FIXTURES											PROPOSED FIXTURE UPGRADE				
Park/Building Name	Building	Building #	Phase	Floor	Room Description	Qty	Description	Watts	kW	kWh	Qty	Description	Watts	kW	kWh
PYMATUNING	FORD ISLAND RESIDENCE	84	INTERIOR		BASEMENT	1	T8 1x4 2-Lamp Vaportight Fixture; Damaged	62	0.062	230	1	New 1x4 2-Lamp Vaportight Fixture with (2) 12.5 Watt LED T8 4' Lamp; Direct Wire to Socket	25	0.025	93
PYMATUNING	FORD ISLAND RESIDENCE	84	INTERIOR		BASEMENT	1	T12 1x4 2-Lamp Vaportight Fixture	72	0.072	267	1	Retrofit with (2) 12.5 Watt LED T8 4' Lamps; Direct Wire to Socket	25	0.025	93
PYMATUNING	FORD ISLAND RESIDENCE	84	INTERIOR		BASEMENT	4	Existing LED Fixture; No Retrofit	10	0.040	148	4	No Retrofit	10	0.040	148
PYMATUNING	SHOWERHOUSE LINESVILLE CAMP	11	INTERIOR		LAUNDRY	4	T12 2x4 2-Lamp Troffer Fixture	78	0.312	1,429	4	Retrofit with (2) 12.5 Watt LED T8 4' Lamps; Direct Wire to Socket	25	0.100	458
PYMATUNING	SHOWERHOUSE LINESVILLE CAMP	11	INTERIOR		CHASE	2	T12 1x8 2-Lamp Wrap Fixture with 60 Watt Lamps	123	0.246	246	2	New 1x8 2-Lamp Wrap Fixture with (4) 12.5 Watt LED T8 4' Lamps; Direct Wire to Socket	50	0.100	100
PYMATUNING	SHOWERHOUSE LINESVILLE CAMP	11	INTERIOR		CHASE	2	T12 1x4 1-Lamp Strip Fixture	43	0.086	86	2	Retrofit with (1) 12.5 Watt LED T8 4' Lamps; Direct Wire to Socket	12.5	0.025	25
PYMATUNING	SHOWERHOUSE LINESVILLE CAMP	11	INTERIOR		CHASE	1	T12 1x4 2-Lamp Industrial Strip Fixture	72	0.072	72	1	Retrofit with (2) 12.5 Watt LED T8 4' Lamps; Direct Wire to Socket	25	0.025	25
PYMATUNING	SHOWERHOUSE LINESVILLE CAMP	11	INTERIOR		MENS SHOWER	4	T12 1x4 2-Lamp Vaportight Fixture	72	0.288	1,319	4	Retrofit with (2) 12.5 Watt LED T8 4' Lamps; Direct Wire to Socket	25	0.100	458
PYMATUNING	SHOWERHOUSE LINESVILLE CAMP	11	INTERIOR		WOMENS SHOWER	4	T12 1x4 2-Lamp Vaportight Fixture	72	0.288	1,319	4	Retrofit with (2) 12.5 Watt LED T8 4' Lamps; Direct Wire to Socket	25	0.100	458
PYMATUNING	SHOWERHOUSE LINESVILLE CAMP	11	EXTERIOR		EXTERIOR	2	70 Watt High Pressure Sodium Canopy Fixture	90	0.180	518	2	New 20 Watt LED Canopy Fixture	21	0.042	121
PYMATUNING	SHOWERHOUSE LINESVILLE CAMP	11	EXTERIOR		EXTERIOR	1	150 Watt High Pressure Sodium Wall Pack Fixture	188	0.188	541	1	New 37 Watt LED Wall Pack Fixture; Non-Dark Sky	39	0.039	112
PYMATUNING	LINESVILLE BEACH HOUSE	19	INTERIOR		MENS RESTROOM	3	T8 1x4 2-Lamp Vaportight Fixture	62	0.186	689	3	Retrofit with (2) 12.5 Watt LED T8 4' Lamps; Direct Wire to Socket	25	0.075	278
PYMATUNING	LINESVILLE BEACH HOUSE	19	INTERIOR		MENS RESTROOM	3	T12 1x4 2-Lamp Vaportight Fixture	72	0.216	800	3	Retrofit with (2) 12.5 Watt LED T8 4' Lamps; Direct Wire to Socket	25	0.075	278
PYMATUNING	LINESVILLE BEACH HOUSE	19	INTERIOR		MENS RESTROOM	1	Circline Fixture; No Retrofit	30	0.030	111	1	No Retrofit	30	0.030	111
PYMATUNING	LINESVILLE BEACH HOUSE	19	INTERIOR		CHASE	5	75 Watt Incandescent A-Lamp Fixture	75	0.375	375	5	Re-Lamp with (1) 10 Watt LED A19	10	0.050	50
PYMATUNING	LINESVILLE BEACH HOUSE	19	INTERIOR		STORAGE/MECHANICAL	4	100 Watt Incandescent A-Lamp Fixture	100	0.400	400	4	Re-Lamp with (1) 18 Watt LED A21	18	0.072	72
PYMATUNING	LINESVILLE BEACH HOUSE	19	INTERIOR		LIFEGUARD	4	T8 1x4 2-Lamp Vaportight Fixture	62	0.248	919	4	Retrofit with (2) 12.5 Watt LED T8 4' Lamps; Direct Wire to Socket	25	0.100	370
PYMATUNING	LINESVILLE BEACH HOUSE	19	INTERIOR		WOMENS RESTROOM	1	Circline Fixture; No Retrofit	30	0.030	111	1	No Retrofit	30	0.030	111
PYMATUNING	LINESVILLE BEACH HOUSE	19	INTERIOR		WOMENS RESTROOM	1	T12 1x4 2-Lamp Vaportight Fixture	72	0.072	38	1	Retrofit with (2) 12.5 Watt LED T8 4' Lamps; Direct Wire to Socket	25	0.025	13
PYMATUNING	LINESVILLE BEACH HOUSE	19	INTERIOR		WOMENS RESTROOM	5	T8 1x4 2-Lamp Vaportight Fixture	62	0.310	1,148	5	Retrofit with (2) 12.5 Watt LED T8 4' Lamps; Direct Wire to Socket	25	0.125	463
PYMATUNING	LINESVILLE BEACH HOUSE	19	EXTERIOR		SOFFIT	14	100 Watt Metal Halide Recessed Fixture	125	1.750	5,040	14	Re-Lamp with (1) 27 Watt LED Omni-Cob Lamp; Hardwire Ballast	27	0.378	1,089
PYMATUNING	SPILLWAY CONCESSION	41	INTERIOR		MECHANICAL	2	T8 1x4 2-Lamp Strip Fixture	62	0.124	124	2	Retrofit with (2) 12.5 Watt LED T8 4' Lamps; Direct Wire to Socket	25	0.050	50
PYMATUNING	SPILLWAY CONCESSION	41	INTERIOR		RESTROOM	1	T8 1x4 2-Lamp Angle Fixture	62	0.062	171	1	Retrofit with (2) 12.5 Watt LED T8 4' Lamps; Direct Wire to Socket	25	0.025	69
PYMATUNING	SPILLWAY CONCESSION	41	INTERIOR		WOMENS RESTROOM	4	T8 1x4 2-Lamp Angle Fixture	62	0.248	684	4	Retrofit with (2) 12.5 Watt LED T8 4' Lamps; Direct Wire to Socket	25	0.100	276
PYMATUNING	SPILLWAY CONCESSION	41	INTERIOR		MENS RESTROOM	4	T8 1x4 2-Lamp Angle Fixture	62	0.248	684	4	Retrofit with (2) 12.5 Watt LED T8 4' Lamps; Direct Wire to Socket	25	0.100	276
PYMATUNING	SPILLWAY CONCESSION	41	INTERIOR		STORE	4	T8 1x4 2-Lamp Vaportight Fixture	62	0.248	684	4	Retrofit with (2) 12.5 Watt LED T8 4' Lamps; Direct Wire to Socket	25	0.100	276

©2013 Energy Systems Group, LLC

EXISTING FIXTURES												PROPOSED FIXTURE UPGRADE				
Park/Building Name	Building	Building #	Phase	Floor	Room Description	Qty	Description	Watts	kW	kWh	Qty	Description	Watts	kW	kWh
PYMATUNING	SPILLWAY CONCESSION	41	INTERIOR		STORAGE	6	T8 1x4 2-Lamp Strip Fixture	62	0.372	372	6	Retrofit with (2) 12.5 Watt LED T8 4' Lamps; Direct Wire to Socket	25	0.150	150
PYMATUNING	SPILLWAY CONCESSION	41	INTERIOR		SINK/PREP	2	T8 1x4 2-Lamp Vaportight Fixture	62	0.124	342	2	Retrofit with (2) 12.5 Watt LED T8 4' Lamps; Direct Wire to Socket	25	0.050	138
PYMATUNING	SPILLWAY CONCESSION	41	INTERIOR		CONCESSION	4	T8 1x4 2-Lamp Vaportight Fixture	62	0.248	684	4	Retrofit with (2) 12.5 Watt LED T8 4' Lamps; Direct Wire to Socket	25	0.100	276
PYMATUNING	SPILLWAY CONCESSION	41	EXTERIOR		EXTERIOR	3	T8 1x4 2-Lamp Vaportight Fixture; Damaged	62	0.186	402	3	New 1x4 2-Lamp Vaportight Fixture with (2) 12.5 Watt LED T8 4' Lamp; Direct Wire to Socket	25	0.075	162
PYMATUNING	SPILLWAY CONCESSION	41	EXTERIOR		EXTERIOR	7	13 Watt Plug-In CFL Jelly Jar	14	0.098	212	7	New 13 Watt LED Jelly Jar Fixture	15	0.105	227
PYMATUNING	SPILLWAY CONCESSION	41	EXTERIOR		EXTERIOR	2	150 Watt High Pressure Sodium Wall Pack Fixture	188	0.376	812	2	New 37 Watt LED Wall Pack Fixture; Non-Dark Sky	39	0.078	168
PYMATUNING	SPILLWAY CONCESSION	41	EXTERIOR		EXTERIOR	1	Existing LED Fixture; No Retrofit	40	0.040	86	1	No Retrofit	40	0.040	86
PYMATUNING	MANNING LAUNCH COMFORT STATION	79	INTERIOR		WOMENS RESTROOM	3	T8 1x4 2-Lamp Vaportight Fixture	62	0.186	513	3	Retrofit with (2) 12.5 Watt LED T8 4' Lamps; Direct Wire to Socket	25	0.075	207
PYMATUNING	MANNING LAUNCH COMFORT STATION	79	INTERIOR		MENS RESTROOM	3	T8 1x4 2-Lamp Vaportight Fixture	62	0.186	513	3	Retrofit with (2) 12.5 Watt LED T8 4' Lamps; Direct Wire to Socket	25	0.075	207
PYMATUNING	MANNING LAUNCH COMFORT STATION	79	INTERIOR		RESTROOM	1	T8 1x4 2-Lamp Vaportight Fixture	62	0.062	171	1	Retrofit with (2) 12.5 Watt LED T8 4' Lamps; Direct Wire to Socket	25	0.025	69
PYMATUNING	MANNING LAUNCH COMFORT STATION	79	INTERIOR		MECHANICAL	1	T8 1x4 2-Lamp Angle Fixture	62	0.062	62	1	Retrofit with (2) 12.5 Watt LED T8 4' Lamps; Direct Wire to Socket	25	0.025	25
PYMATUNING	MANNING LAUNCH COMFORT STATION	79	EXTERIOR		EXTERIOR	1	26 Watt Compact Fluorescent Canopy Fixture	26	0.026	75	1	New 10 Watt LED Canopy Fixture	12	0.012	35
PYMATUNING	MANNING LAUNCH COMFORT STATION	79	EXTERIOR		EXTERIOR	1	Existing LED Fixture; No Retrofit	30	0.030	86	1	No Retrofit	30	0.030	86
PYMATUNING	ESPYVILLE BOAT LIVERY	22	INTERIOR		SEATING AREA	5	T8 2x4 4-Lamp Surface Mount Fixture	106	0.530	1,463	5	Retrofit with (4) 12.5 Watt LED T8 4' Lamps; Direct Wire to Socket	50	0.250	690
PYMATUNING	ESPYVILLE BOAT LIVERY	22	INTERIOR		SEATING AREA	1	T8 2x4 4-Lamp Surface Mount Fixture; Damaged	106	0.106	293	1	New 2x4 4-Lamp Surface Mount with (4) 12.5 Watt LED T8 4' Lamps; Direct Wire to Socket	50	0.050	138
PYMATUNING	ESPYVILLE BOAT LIVERY	22	INTERIOR		SEATING AREA	1	25 Watt Incandescent 2-Lamp Exit Sign	50	0.050	438	1	New 3 watt LED Exit Sign	3	0.003	26
PYMATUNING	ESPYVILLE BOAT LIVERY	22	INTERIOR		STORE	11	175 Watt Metal Halide Cylinder Fixture	213	2.343	6,467	11	New 40 Watt LED Cylinder Fixture	40	0.440	1,214
PYMATUNING	ESPYVILLE BOAT LIVERY	22	INTERIOR		OFFICE	2	T12 2x4 4-Lamp Surface Mount Fixture	144	0.288	795	2	Retrofit with (4) 12.5 Watt LED T8 4' Lamps; Direct Wire to Socket	50	0.100	276
PYMATUNING	ESPYVILLE BOAT LIVERY	22	INTERIOR		STORAGE	4	T12 1x4 2-Lamp Wrap Fixture	72	0.288	288	4	Retrofit with (2) 12.5 Watt LED T8 4' Lamps; Direct Wire to Socket	25	0.100	100
PYMATUNING	ESPYVILLE BOAT LIVERY	22	INTERIOR		STORAGE	1	T12 1x4 2-Lamp Wrap Fixture; Damaged	72	0.072	72	1	New 1x4 2-Lamp Wrap Fixture with (2) 12.5 Watt LED T8 4' Lamp; Direct Wire to Socket	25	0.025	25
PYMATUNING	ESPYVILLE BOAT LIVERY	22	INTERIOR		RESTROOM	1	T12 1x4 2-Lamp Wrap Fixture	72	0.072	199	1	Retrofit with (2) 12.5 Watt LED T8 4' Lamps; Direct Wire to Socket	25	0.025	69
PYMATUNING	ESPYVILLE BOAT LIVERY	22	INTERIOR		MECHANICAL	2	100 Watt Incandescent A-Lamp Fixture	100	0.200	200	2	Re-Lamp with (1) 18 Watt LED A21	18	0.036	36
PYMATUNING	ESPYVILLE BOAT LIVERY	22	INTERIOR		MECHANICAL	1	25 Watt Incandescent 2-Lamp Exit Sign	50	0.050	438	1	New 3 watt LED Exit Sign	3	0.003	26
PYMATUNING	ESPYVILLE BOAT LIVERY	22	INTERIOR		ELECTRICAL	1	100 Watt Incandescent A-Lamp Fixture	100	0.100	100	1	Re-Lamp with (1) 18 Watt LED A21	18	0.018	18
PYMATUNING	ESPYVILLE BOAT LIVERY	22	EXTERIOR		EXTERIOR	1	Existing LED Fixture; No Retrofit	40	0.040	115	1	No Retrofit	40	0.040	115
PYMATUNING	ESPYVILLE BOAT LIVERY	22	EXTERIOR		EXTERIOR	2	100 Watt High Pressure Sodium 12" Downlight Fixture	125	0.250	720	2	Retrofit with 23 Watt LED 12" Downlight	23	0.046	132

©2013 Energy Systems Group, LLC

EXISTING FIXTURES											PROPOSED FIXTURE UPGRADE				
Park/Building Name	Building	Building #	Phase	Floor	Room Description	Qty	Description	Watts	kW	kWh	Qty	Description	Watts	kW	kWh
PYMATUNING	ESPYVILLE BOAT LIVERY	22	EXTERIOR		EXTERIOR	9	100 Watt High Pressure Sodium Wall Pack Fixture	125	1.125	3,240	9	New 24 Watt LED Wall Pack Fixture; Non-Dark Sky	25	0.225	648
PYMATUNING	ESPYVILLE BOAT LIVERY	22	EXTERIOR		PIER	6	150 Watt High Pressure Sodium Fixture	188	1.128	3,249	6	Re-Lamp with (1) 36 Watt LED Omni-Cob Lamp; Hardwire Ballast	36	0.216	622
PYMATUNING	ESPYVILLE BOAT LIVERY	22	EXTERIOR		PIER	2	250 Watt High Pressure Sodium Flood Fixture	300	0.600	1,728	2	New 125 Watt LED Flood Fixture	133	0.266	766
PYMATUNING	ESPYVILLE BOAT LIVERY	22	EXTERIOR		PIER	2	250 Watt High Pressure Sodium 2-Head Flood	590	1.180	3,398	2	(2) New 125 Watt LED Flood Fixtures	268	0.536	1,544
PYMATUNING	ESPYVILLE BOAT LIVERY STORAGE	135	INTERIOR		STORAGE	2	75 Watt Incandescent A-Lamp Fixture	75	0.150	150	2	Re-Lamp with (1) 10 Watt LED A19	10	0.020	20
PYMATUNING	ESPYVILLE BOAT LIVERY STORAGE	135	EXTERIOR		EXTERIOR	3	100 Watt High Pressure Sodium Wall Pack Fixture	125	0.375	1,080	3	New 24 Watt LED Wall Pack Fixture; Non-Dark Sky	25	0.075	216
PYMATUNING	ESPYVILLE COMFORT STATION LIVERY	76	INTERIOR		WOMENS RESTROOM	2	T12 1x4 2-Lamp Vaportight Fixture	72	0.144	397	2	Retrofit with (2) 12.5 Watt LED T8 4' Lamps; Direct Wire to Socket	25	0.050	138
PYMATUNING	ESPYVILLE COMFORT STATION LIVERY	76	INTERIOR		MENS RESTROOM	2	T12 1x4 2-Lamp Vaportight Fixture	72	0.144	397	2	Retrofit with (2) 12.5 Watt LED T8 4' Lamps; Direct Wire to Socket	25	0.050	138
PYMATUNING	ESPYVILLE COMFORT STATION LIVERY	76	INTERIOR		MECHANICAL	1	T12 1x8 1-Lamp Wrap Fixture with 60 Watt Lamps	83	0.083	83	1	New 1x8 2-Lamp Wrap Fixture with (2) 12.5 Watt LED T8 4' Lamps; Direct Wire to Socket	25	0.025	25
PYMATUNING	ESPYVILLE COMFORT STATION LIVERY	76	EXTERIOR		EXTERIOR	1	70 Watt High Pressure Sodium Canopy Fixture	90	0.090	259	1	New 20 Watt LED Canopy Fixture	21	0.021	60
PYMATUNING	ESPYVILLE LAUNCH COMFORT STATION	48	INTERIOR		MENS RESTROOM	2	T12 1x4 2-Lamp Vaportight Fixture	72	0.144	397	2	Retrofit with (2) 12.5 Watt LED T8 4' Lamps; Direct Wire to Socket	25	0.050	138
PYMATUNING	ESPYVILLE LAUNCH COMFORT STATION	48	INTERIOR		WOMENS RESTROOM	2	T12 1x4 2-Lamp Vaportight Fixture	72	0.144	397	2	Retrofit with (2) 12.5 Watt LED T8 4' Lamps; Direct Wire to Socket	25	0.050	138
PYMATUNING	ESPYVILLE LAUNCH COMFORT STATION	48	INTERIOR		MECHANICAL	2	T8 1x4 2-Lamp Vaportight Fixture	62	0.124	124	2	Retrofit with (2) 12.5 Watt LED T8 4' Lamps; Direct Wire to Socket	25	0.050	50
PYMATUNING	ESPYVILLE LAUNCH COMFORT STATION	48	EXTERIOR		EXTERIOR	1	26 Watt Compact Fluorescent Canopy Fixture	26	0.026	75	1	New 10 Watt LED Canopy Fixture	12	0.012	35
PYMATUNING	ESPYVILLE LAUNCH COMFORT STATION	48	EXTERIOR		EXTERIOR	1	150 Watt High Pressure Sodium Dusk to Dawn Fixture	188	0.188	541	1	New 26 Watt LED Dusk to Dawn Barnyard Fixture	26	0.026	75
PYMATUNING	ESPYVILLE LAUNCH COMFORT STATION	48	EXTERIOR		EXTERIOR	1	150 Watt High Pressure Sodium Dusk to Dawn Fixture	188	0.188	541	1	New 26 Watt LED Dusk to Dawn Barnyard Fixture	26	0.026	75
PYMATUNING	SNODGRASS LAUNCH COMFORT STATION	51	INTERIOR		WOMENS RESTROOM	3	T8 1x4 2-Lamp Vaportight Fixture	62	0.186	513	3	Retrofit with (2) 12.5 Watt LED T8 4' Lamps; Direct Wire to Socket	25	0.075	207
PYMATUNING	SNODGRASS LAUNCH COMFORT STATION	51	INTERIOR		RESTROOM	1	T8 1x4 2-Lamp Vaportight Fixture	62	0.062	171	1	Retrofit with (2) 12.5 Watt LED T8 4' Lamps; Direct Wire to Socket	25	0.025	69
PYMATUNING	SNODGRASS LAUNCH COMFORT STATION	51	INTERIOR		MENS RESTROOM	3	T8 1x4 2-Lamp Vaportight Fixture	62	0.186	513	3	Retrofit with (2) 12.5 Watt LED T8 4' Lamps; Direct Wire to Socket	25	0.075	207
PYMATUNING	SNODGRASS LAUNCH COMFORT STATION	51	INTERIOR		MECHANICAL	1	T8 1x4 2-Lamp Angle Fixture	62	0.062	62	1	Retrofit with (2) 12.5 Watt LED T8 4' Lamps; Direct Wire to Socket	25	0.025	25
PYMATUNING	SNODGRASS LAUNCH COMFORT STATION	51	EXTERIOR		EXTERIOR	1	26 Watt Compact Fluorescent Canopy Fixture	26	0.026	75	1	New 10 Watt LED Canopy Fixture	12	0.012	35
PYMATUNING	SNODGRASS LAUNCH COMFORT STATION	51	EXTERIOR		EXTERIOR	1	Existing LED Fixture; No Retrofit	30	0.030	86	1	No Retrofit	30	0.030	86
PYMATUNING	LIFEGUARD/FIRST AID JC BEACH	3	INTERIOR		LIFEGUARD	2	T12 2x4 2-Lamp Troffer Fixture	78	0.156	431	2	Retrofit with (2) 12.5 Watt LED T8 4' Lamps; Direct Wire to Socket	25	0.050	138
PYMATUNING	MCARTHUR COMFORT STATION	15	INTERIOR		MENS RESTROOM	2	T8 1x4 2-Lamp Vaportight Fixture	62	0.124	342	2	Retrofit with (2) 12.5 Watt LED T8 4' Lamps; Direct Wire to Socket	25	0.050	138
PYMATUNING	MCARTHUR COMFORT STATION	15	INTERIOR		WOMENS RESTROOM	2	T8 1x4 2-Lamp Vaportight Fixture	62	0.124	342	2	Retrofit with (2) 12.5 Watt LED T8 4' Lamps; Direct Wire to Socket	25	0.050	138
PYMATUNING	MCARTHUR COMFORT STATION	15	INTERIOR		MECHANICAL	2	T8 1x4 2-Lamp Vaportight Fixture	62	0.124	124	2	Retrofit with (2) 12.5 Watt LED T8 4' Lamps; Direct Wire to Socket	25	0.050	50

©2013 Energy Systems Group, LLC

EXISTING FIXTURES												PROPOSED FIXTURE UPGRADE				
Park/Building Name	Building	Building #	Phase	Floor	Room Description	Qty	Description	Watts	kW	kWh	Qty	Description	Watts	kW	kWh
PYMATUNING	MCARTHUR COMFORT STATION	15	EXTERIOR		EXTERIOR	1	26 Watt Compact Fluorescent Canopy Fixture	26	0.026	75	1	New 10 Watt LED Canopy Fixture	12	0.012	35
PYMATUNING	JAMESTOWN CAMP STORAGE SHED	97	INTERIOR		STORAGE	1	T12 1x8 2-Lamp Strip Fixture with 60 Watt Lamps	123	0.123	123	1	Retrofit with (4) 12.5 Watt LED T8 4' Lamps and (1) 1x8 4-Lamp Strip Kit; Direct Wire to Socket	50	0.050	50
PYMATUNING	JAMESTOWN BEACH HOUSE	90	INTERIOR		MENS RESTROOM	2	T12 1x4 2-Lamp Wrap Fixture; Damaged	72	0.144	397	2	New 1x4 2-Lamp Wrap Fixture with (2) 12.5 Watt LED T8 4' Lamp; Direct Wire to Socket	25	0.050	138
PYMATUNING	JAMESTOWN BEACH HOUSE	90	INTERIOR		MECHANICAL	6	26 Watt Compact Fluorescent Fixture	26	0.156	156	6	Re-Lamp with (1) 10 Watt LED A19	10	0.060	60
PYMATUNING	JAMESTOWN BEACH HOUSE	90	INTERIOR		MECHANICAL	10	T12 1x4 2-Lamp Wrap Fixture; Damaged	72	0.720	720	10	New 1x4 2-Lamp Wrap Fixture with (2) 12.5 Watt LED T8 4' Lamp; Direct Wire to Socket	25	0.250	250
PYMATUNING	JAMESTOWN BEACH HOUSE	90	INTERIOR		WOMENS RESTROOM	2	T12 1x4 2-Lamp Vaportight Fixture	72	0.144	397	2	Retrofit with (2) 12.5 Watt LED T8 4' Lamps; Direct Wire to Socket	25	0.050	138
PYMATUNING	JAMESTOWN BEACH HOUSE	90	INTERIOR		WOMENS RESTROOM	2	T12 1x8 2-Lamp Wrap Fixture; Damaged	72	0.144	397	2	New 1x8 2-Lamp Wrap Fixture with (2) 12.5 Watt LED T8 4' Lamps; Direct Wire to Socket	25	0.050	138
PYMATUNING	JAMESTOWN BEACH HOUSE	90	INTERIOR		STORAGE	4	T12 1x8 2-Lamp Strip Fixture with 60 Watt Lamps	123	0.492	492	4	Retrofit with (4) 12.5 Watt LED T8 4' Lamps and (1) 1x8 4-Lamp Strip Kit; Direct Wire to Socket	50	0.200	200
PYMATUNING	JAMESTOWN BEACH HOUSE	90	INTERIOR		STORAGE	2	T12 1x4 2-Lamp Strip Fixture	72	0.144	144	2	Retrofit with (2) 12.5 Watt LED T8 4' Lamps; Direct Wire to Socket	25	0.050	50
PYMATUNING	JAMESTOWN BEACH HOUSE	90	INTERIOR		HALLWAY	19	26 Watt Compact Fluorescent Fixture	26	0.494	1,363	19	Re-Lamp with (1) 10 Watt LED A19	10	0.190	524
PYMATUNING	JAMESTOWN BEACH HOUSE	90	INTERIOR		MENS RESTROOM	3	T12 1x8 2-Lamp Wrap Fixture; Damaged	72	0.216	596	3	New 1x8 2-Lamp Wrap Fixture with (2) 12.5 Watt LED T8 4' Lamps; Direct Wire to Socket	25	0.075	207
PYMATUNING	JAMESTOWN BEACH HOUSE	90	INTERIOR		PIPECHASE	2	100 Watt Jelly Jar Fixture; Damaged	100	0.200	200	2	New 18 Watt LED A21 Jelly Jar Fixture	15	0.030	30
PYMATUNING	JAMESTOWN BEACH HOUSE	90	INTERIOR		FIRST AID	2	T12 1x8 2-Lamp Wrap Fixture; Damaged	72	0.144	397	2	New 1x8 2-Lamp Wrap Fixture with (2) 12.5 Watt LED T8 4' Lamps; Direct Wire to Socket	25	0.050	138
PYMATUNING	JAMESTOWN BEACH HOUSE	90	INTERIOR		BACK STORAGE	9	T12 1x8 2-Lamp Wrap Fixture; Damaged	72	0.648	648	9	New 1x8 2-Lamp Wrap Fixture with (2) 12.5 Watt LED T8 4' Lamps; Direct Wire to Socket	25	0.225	225
PYMATUNING	JAMESTOWN BEACH HOUSE	90	EXTERIOR		EXTERIOR	14	26 Watt Compact Fluorescent Fixture	26	0.364	1,048	14	Re-Lamp with (1) 10 Watt LED A19	10	0.140	403
PYMATUNING	JAMESTOWN BEACH HOUSE	90	INTERIOR		WOMENS RESTROOM	2	T12 1x4 2-Lamp Wrap Fixture; Damaged	72	0.144	397	2	New 1x4 2-Lamp Wrap Fixture with (2) 12.5 Watt LED T8 4' Lamp; Direct Wire to Socket	25	0.050	138
PYMATUNING	LIFEGUARD FIRST AID BEACH 2	114	INTERIOR		STORAGE	2	T12 2x4 2-Lamp Troffer Fixture	78	0.156	156	2	Retrofit with (2) 12.5 Watt LED T8 4' Lamps; Direct Wire to Socket	25	0.050	50
PYMATUNING	GROUP CAMP WASH HOUSE NORTH	12	INTERIOR		WOMENS RESTROOM	2	T8 1x4 2-Lamp Vaportight Fixture	62	0.124	342	2	Retrofit with (2) 12.5 Watt LED T8 4' Lamps; Direct Wire to Socket	25	0.050	138
PYMATUNING	GROUP CAMP WASH HOUSE NORTH	12	INTERIOR		MENS RESTROOM	2	T12 1x4 2-Lamp Vaportight Fixture	72	0.144	397	2	Retrofit with (2) 12.5 Watt LED T8 4' Lamps; Direct Wire to Socket	25	0.050	138
PYMATUNING	GROUP CAMP WASH HOUSE NORTH	12	INTERIOR		MECHANICAL	1	T12 1x8 1-Lamp Wrap Fixture with 60 Watt Lamps	83	0.083	83	1	New 1x8 2-Lamp Wrap Fixture with (2) 12.5 Watt LED T8 4' Lamps; Direct Wire to Socket	25	0.025	25
PYMATUNING	GROUP CAMP WASH HOUSE NORTH	12	EXTERIOR		EXTERIOR	1	26 Watt Compact Fluorescent Canopy Fixture	26	0.026	75	1	New 10 Watt LED Canopy Fixture	12	0.012	35
PYMATUNING	SHED BROWN BARN SOUTH TURNERSVILLE	56	INTERIOR		STORAGE BAY	3	T12 1x8 2-Lamp Industrial Strip Fixture with 60 Watt Lamps	123	0.369	369	3	Retrofit with (4) 12.5 Watt LED T8 4' Lamps and (1) 1x8 4-Lamp Industrial Strip Kit; Direct Wire to Socket	50	0.150	150
PYMATUNING	SHED BROWN BARN SOUTH TURNERSVILLE	56	INTERIOR		STORAGE BAY	4	T12 1x8 2-Lamp Strip Fixture with 60 Watt Lamps	123	0.492	492	4	Retrofit with (4) 12.5 Watt LED T8 4' Lamps and (1) 1x8 4-Lamp Strip Kit; Direct Wire to Socket	50	0.200	200
PYMATUNING	SHED BROWN BARN SOUTH TURNERSVILLE	56	EXTERIOR		EXTERIOR	1	175 Watt Mercury Vapor Dusk to Dawn Fixture	210	0.210	605	1	New 26 Watt LED Dusk to Dawn Barnyard Fixture	26	0.026	75
PYMATUNING	TWO BAY SHED NORTH OF BROWN BARN TURNERSVILLE	148	INTERIOR		SHED	3	150 Watt Incandescent A-Lamp Fixture	150	0.450	1,170	3	Re-Lamp with (1) 18 Watt LED A21	18	0.054	140
PYMATUNING	TWO BAY SHED NORTH OF BROWN BARN TURNERSVILLE	148	INTERIOR		SHED	1	90 Watt Incandescent PAR38 Fixture	90	0.090	234	1	Re-Lamp with (1) 17 Watt LED PAR38	17	0.017	44

©2013 Energy Systems Group, LLC

EXISTING FIXTURES											PROPOSED FIXTURE UPGRADE				
Park/Building Name	Building	Building #	Phase	Floor	Room Description	Qty	Description	Watts	kW	kWh	Qty	Description	Watts	kW	kWh
PYMATUNING	TWO BAY SHED NORTH OF BROWN BARN TURNERSVILLE	148	INTERIOR		SHED	1	T12 1x4 2-Lamp Strip Fixture	72	0.072	187	1	Retrofit with (2) 12.5 Watt LED T8 4' Lamps; Direct Wire to Socket	25	0.025	65
PYMATUNING	PICNIC SHELTER 4	34	INTERIOR		ACTIVITY ROOM	5	T12 1x8 2-Lamp Strip Fixture with 60 Watt Lamps	123	0.615	2,278	5	Retrofit with (4) 12.5 Watt LED T8 4' Lamps and (1) 1x8 4-Lamp Strip Kit; Direct Wire to Socket	50	0.250	926
PYMATUNING	JAMESTOWN STP GARAGE	139	INTERIOR		STORAGE	2	T12 1x4 2-Lamp Industrial Strip Fixture	72	0.144	144	2	Retrofit with (2) 12.5 Watt LED T8 4' Lamps; Direct Wire to Socket	25	0.050	50
PYMATUNING	JAMESTOWN STP GARAGE	139	EXTERIOR		EXTERIOR	1	250 Watt Metal Halide Cobra Head Fixture	295	0.295	850	1	New 64 Watt LED Cobra Head Fixture	64	0.064	184
PYMATUNING	JAMESTOWN STP	140	INTERIOR		STORAGE	1	100 Watt Incandescent A-Lamp Jelly Jar Fixture	100	0.100	100	1	Re-Lamp with (1) 18 Watt LED A21	18	0.018	18
PYMATUNING	PUMP HOUSE MAIN BEACH	73	INTERIOR		STORAGE	1	T12 2x4 4-Lamp Troffer Fixture; Damaged	144	0.144	144	1	New 2x4 2-Lamp Lay-In Troffer Fixture with (2) 12.5 Watt LED T8 4' Lamp; Direct Wire to Socket	25	0.025	25
PYMATUNING	PUMP HOUSE MAIN BEACH	73	INTERIOR		STORAGE	1	T12 1x8 2-Lamp Strip Fixture with 60 Watt Lamps	123	0.123	123	1	Retrofit with (4) 12.5 Watt LED T8 4' Lamps and (1) 1x8 4-Lamp Strip Kit; Direct Wire to Socket	50	0.050	50
PYMATUNING	COMFORT STATION BALLFIELD	27	INTERIOR		MENS RESTROOM	4	T8 2x2 1-Lamp Vanity Fixture	22	0.088	326	4	Retrofit with (1) 10 Watt LED T8 2' Lamp; Direct Wire to Socket	10	0.040	148
PYMATUNING	COMFORT STATION BALLFIELD	27	INTERIOR		WOMENS RESTROOM	4	T8 2x2 1-Lamp Vanity Fixture	22	0.088	326	4	Retrofit with (1) 10 Watt LED T8 2' Lamp; Direct Wire to Socket	10	0.040	148
PYMATUNING	COMFORT STATION BALLFIELD	27	INTERIOR		MECHANICAL	2	T8 2x2 1-Lamp Vanity Fixture	22	0.044	44	2	Retrofit with (1) 10 Watt LED T8 2' Lamp; Direct Wire to Socket	10	0.020	20
PYMATUNING	COMFORT STATION BALLFIELD	27	EXTERIOR		EXTERIOR	2	100 Watt Metal Halide Wall Pack Fixture	125	0.250	720	2	New 24 Watt LED Wall Pack Fixture; Non-Dark Sky	25	0.050	144
PYMATUNING	COMFORT STATION BALLFIELD	27	EXTERIOR		EXTERIOR	1	100 Watt High Pressure Sodium Wall Pack Fixture	125	0.125	360	1	New 24 Watt LED Wall Pack Fixture; Non-Dark Sky	25	0.025	72
PYMATUNING	COMFORT STATION PAVILION 4	5	INTERIOR		MENS RESTROOM	6	T8 2x2 1-Lamp Vanity Fixture	22	0.132	489	6	Retrofit with (1) 10 Watt LED T8 2' Lamp; Direct Wire to Socket	10	0.060	222
PYMATUNING	COMFORT STATION PAVILION 4	5	INTERIOR		WOMENS RESTROOM	6	T8 2x2 1-Lamp Vanity Fixture	22	0.132	489	6	Retrofit with (1) 10 Watt LED T8 2' Lamp; Direct Wire to Socket	10	0.060	222
PYMATUNING	COMFORT STATION PAVILION 4	5	INTERIOR		MECHANICAL	3	T8 2x2 1-Lamp Vanity Fixture	22	0.066	66	3	Retrofit with (1) 10 Watt LED T8 2' Lamp; Direct Wire to Socket	10	0.030	30
PYMATUNING	COMFORT STATION PAVILION 4	5	EXTERIOR		EXTERIOR	2	100 Watt Metal Halide Wall Pack Fixture	125	0.250	720	2	New 24 Watt LED Wall Pack Fixture; Non-Dark Sky	25	0.050	144
PYMATUNING	RANGER STATION - GARAGE	104	INTERIOR		GARAGE	4	T8 1x4 2-Lamp Wrap Fixture	62	0.248	248	4	Retrofit with (2) 12.5 Watt LED T8 4' Lamps; Direct Wire to Socket	25	0.100	100
PYMATUNING	RANGER STATION - OFFICE	104	INTERIOR		ACTIVITY ROOM	6	T12 2x4 2-Lamp Surface Mount Fixture	78	0.468	1,052	6	Retrofit with (2) 12.5 Watt LED T8 4' Lamps; Direct Wire to Socket	25	0.150	337
PYMATUNING	RANGER STATION - OFFICE	104	INTERIOR		HALLWAY	3	T12 2x4 2-Lamp Surface Mount Fixture	78	0.234	526	3	Retrofit with (2) 12.5 Watt LED T8 4' Lamps; Direct Wire to Socket	25	0.075	169
PYMATUNING	RANGER STATION - OFFICE	104	INTERIOR		MENS RESTROOM	1	T12 2x2 2-Lamp Vanity Fixture	42	0.042	94	1	Retrofit with (2) 10 Watt LED T8 2' Lamps; Direct Wire to Socket	20	0.020	45
PYMATUNING	RANGER STATION - OFFICE	104	INTERIOR		MENS RESTROOM	1	T12 2x4 2-Lamp Surface Mount Fixture	78	0.078	175	1	Retrofit with (2) 12.5 Watt LED T8 4' Lamps; Direct Wire to Socket	25	0.025	56
PYMATUNING	RANGER STATION - OFFICE	104	INTERIOR		MECHANICAL	1	150 Watt Incandescent A-Lamp Fixture	150	0.150	150	1	Re-Lamp with (1) 18 Watt LED A21	18	0.018	18
PYMATUNING	RANGER STATION - OFFICE	104	INTERIOR		OFFICE	2	T12 2x4 4-Lamp Surface Mount Fixture	144	0.288	647	2	Retrofit with (4) 12.5 Watt LED T8 4' Lamps; Direct Wire to Socket	50	0.100	225
PYMATUNING	RANGER STATION - OFFICE	104	INTERIOR		WOMENS RESTROOM	1	T12 2x4 2-Lamp Surface Mount Fixture	78	0.078	175	1	Retrofit with (2) 12.5 Watt LED T8 4' Lamps; Direct Wire to Socket	25	0.025	56
PYMATUNING	RANGER STATION - OFFICE	104	INTERIOR		WOMENS RESTROOM	1	T12 2x2 2-Lamp Vanity Fixture	42	0.042	94	1	Retrofit with (2) 10 Watt LED T8 2' Lamps; Direct Wire to Socket	20	0.020	45
PYMATUNING	RANGER STATION - OFFICE	104	INTERIOR		OFFICE	1	T12 2x4 4-Lamp Surface Mount Fixture	144	0.144	324	1	Retrofit with (4) 12.5 Watt LED T8 4' Lamps; Direct Wire to Socket	50	0.050	112

©2013 Energy Systems Group, LLC

EXISTING FIXTURES												PROPOSED FIXTURE UPGRADE				
Park/Building Name	Building	Building #	Phase	Floor	Room Description	Qty	Description	Watts	kW	kWh	Qty	Description	Watts	kW	kWh
PYMATUNING	RANGER STATION - OFFICE	104	INTERIOR		STORAGE EVIDENCE	2	T12 2x4 4-Lamp Surface Mount Fixture	144	0.288	288	2	Retrofit with (4) 12.5 Watt LED T8 4' Lamps; Direct Wire to Socket	50	0.100	100
PYMATUNING	RANGER STATION - OFFICE	104	INTERIOR		STORAGE	2	T12 2x4 4-Lamp Surface Mount Fixture	144	0.288	288	2	Retrofit with (4) 12.5 Watt LED T8 4' Lamps; Direct Wire to Socket	50	0.100	100
PYMATUNING	RANGER STATION - OFFICE	104	INTERIOR		BACK OFFICE	2	T12 2x4 4-Lamp Surface Mount Fixture	144	0.288	647	2	Retrofit with (4) 12.5 Watt LED T8 4' Lamps; Direct Wire to Socket	50	0.100	225
PYMATUNING	RANGER STATION - OFFICE	104	EXTERIOR		EXTERIOR	2	70 Watt High Pressure Sodium Wall Pack Fixture	90	0.180	788	2	New 24 Watt LED Wall Pack Fixture; Non-Dark Sky	25	0.050	219
PYMATUNING	RANGER STATION - OFFICE	104	EXTERIOR		EXTERIOR	2	Existing LED Fixture; No Retrofit	30	0.060	263	2	No Retrofit	30	0.060	263
PYMATUNING	CABIN BOOSTER STATION	14	INTERIOR		CABIN	1	23 Watt Compact Fluorescent Fixture	23	0.023	85	1	Re-Lamp with (1) 10 Watt LED A19	10	0.010	37
OHIO PYLE STATE PARK	CAMPING CONTACT		INTERIOR		FRONT	4	60 Watt Incandescent A-Lamp Fixture	60	0.240	889	4	Re-Lamp with (1) 10 Watt LED A19	10	0.040	148
OHIO PYLE STATE PARK	CAMPING CONTACT		INTERIOR		BATHROOM	1	T8 1x4 2-Lamp Vanity Fixture	62	0.062	230	1	Retrofit with (2) 12.5 Watt LED T8 4' Lamps; Direct Wire to Socket	25	0.025	93
OHIO PYLE STATE PARK	CAMPING CONTACT		INTERIOR		BATHROOM	1	60 Watt Incandescent A-Lamp Fixture	60	0.060	222	1	Re-Lamp with (1) 10 Watt LED A19	10	0.010	37
OHIO PYLE STATE PARK	CAMPING CONTACT		EXTERIOR		OUTSIDE	1	100 Watt Metal Halide Wall Pack Fixture	125	0.125	548	1	New 24 Watt LED Wall Pack Fixture; Non-Dark Sky	25	0.025	110
OHIO PYLE STATE PARK	CAMPING CONTACT		EXTERIOR		OUTSIDE	3	Existing LED Fixture; No Retrofit	30	0.090	394	3	No Retrofit	30	0.090	394
OHIO PYLE STATE PARK	CAMPING CONTACT		EXTERIOR		OUTSIDE BATHROOMS	1	T8 1x4 2-Lamp Wrap Fixture	62	0.062	272	1	Retrofit with (2) 12.5 Watt LED T8 4' Lamps; Direct Wire to Socket	25	0.025	110
OHIO PYLE STATE PARK	YURT #1		INTERIOR		INTERIOR	2	50 Watt Incandescent MR16 Fixture	50	0.100	370	2	Re-Lamp with (1) 7 Watt LED MR16	7	0.014	52
OHIO PYLE STATE PARK	YURT #1		EXTERIOR		EXTERIOR	1	23 Watt Compact Fluorescent Fixture	23	0.023	101	1	Re-Lamp with (1) 10 Watt LED A19	10	0.010	44
OHIO PYLE STATE PARK	YURT #2		INTERIOR		INTERIOR	2	50 Watt Incandescent MR16 Fixture	50	0.100	370	2	Re-Lamp with (1) 7 Watt LED MR16	7	0.014	52
OHIO PYLE STATE PARK	YURT #2		EXTERIOR		EXTERIOR	1	23 Watt Compact Fluorescent Fixture	23	0.023	101	1	Re-Lamp with (1) 10 Watt LED A19	10	0.010	44
OHIO PYLE STATE PARK	YURT #3		INTERIOR		INTERIOR	2	50 Watt Incandescent MR16 Fixture	50	0.100	370	2	Re-Lamp with (1) 7 Watt LED MR16	7	0.014	52
OHIO PYLE STATE PARK	YURT #3		EXTERIOR		EXTERIOR	1	23 Watt Compact Fluorescent Fixture	23	0.023	101	1	Re-Lamp with (1) 10 Watt LED A19	10	0.010	44
OHIO PYLE STATE PARK	YURT #4		INTERIOR		INTERIOR	2	50 Watt Incandescent MR16 Fixture	50	0.100	370	2	Re-Lamp with (1) 7 Watt LED MR16	7	0.014	52
OHIO PYLE STATE PARK	YURT #4		EXTERIOR		EXTERIOR	1	23 Watt Compact Fluorescent Fixture	23	0.023	101	1	Re-Lamp with (1) 10 Watt LED A19	10	0.010	44
OHIO PYLE STATE PARK	CHERRY WASH ROOM		INTERIOR		WOMENS ROOM	2	T8 1x4 2-Lamp Vanity Fixture	62	0.124	568	2	Retrofit with (2) 12.5 Watt LED T8 4' Lamps; Direct Wire to Socket	25	0.050	229
OHIO PYLE STATE PARK	CHERRY WASH ROOM		INTERIOR		WOMENS ROOM	1	Existing LED Fixture; No Retrofit	40	0.040	183	1	No Retrofit	40	0.040	183
OHIO PYLE STATE PARK	CHERRY WASH ROOM		INTERIOR		WOMENS ROOM	1	Existing LED Fixture; No Retrofit	40	0.040	183	1	No Retrofit	40	0.040	183
OHIO PYLE STATE PARK	CHERRY WASH ROOM		INTERIOR		WOMENS ROOM	1	32 Watt Compact Fluorescent Fixture	32	0.032	147	1	Re-Lamp with (1) 10 Watt LED A19	10	0.010	46
OHIO PYLE STATE PARK	CHERRY WASH ROOM		EXTERIOR		WOMENS ROOM	1	60 Watt Incandescent A-Lamp Fixture	60	0.060	263	1	Re-Lamp with (1) 10 Watt LED A19	10	0.010	44
OHIO PYLE STATE PARK	CHERRY WASH ROOM		INTERIOR		MENS ROOM	4	T8 1x4 2-Lamp Vanity Fixture	62	0.248	1,136	4	Retrofit with (2) 12.5 Watt LED T8 4' Lamps; Direct Wire to Socket	25	0.100	458

©2013 Energy Systems Group, LLC

EXISTING FIXTURES											PROPOSED FIXTURE UPGRADE				
Park/Building Name	Building	Building #	Phase	Floor	Room Description	Qty	Description	Watts	kW	kWh	Qty	Description	Watts	kW	kWh
OHIO PYLE STATE PARK	CHERRY WASH ROOM		INTERIOR		MENS ROOM	1	32 Watt Compact Fluorescent 2-Lamp Fixture	64	0.064	293	1	Re-Lamp with (2) 10 Watt LED A19	20	0.020	92
OHIO PYLE STATE PARK	CHERRY WASH ROOM		EXTERIOR		MENS ROOM	1	Existing LED Fixture; No Retrofit	10	0.010	44	1	No Retrofit	10	0.010	44
OHIO PYLE STATE PARK	DOGWOOD WASH ROOM		INTERIOR		MENS ROOM	2	Existing LED Fixture; No Retrofit	40	0.080	366	2	No Retrofit	40	0.080	366
OHIO PYLE STATE PARK	DOGWOOD WASH ROOM		INTERIOR		CLOSET	1	100 Watt Incandescent A-Lamp & 13 Watt Compact Fluorescent	113	0.113	518	1	Re-Lamp with (2) 10 Watt LED A19	20	0.020	92
OHIO PYLE STATE PARK	DOGWOOD WASH ROOM		INTERIOR		CLOSET	1	100 Watt Incandescent 2-Lamp A-Lamp	200	0.200	916	1	Re-Lamp with (2) 18 Watt LED A21	36	0.036	165
OHIO PYLE STATE PARK	DOGWOOD WASH ROOM		INTERIOR		WOMENS ROOM	2	Existing LED Fixture; No Retrofit	40	0.080	366	2	No Retrofit	40	0.080	366
OHIO PYLE STATE PARK	DOGWOOD WASH ROOM		EXTERIOR		EXTERIOR	2	13 Watt Compact Fluorescent Fixture	13	0.026	114	2	Re-Lamp with (1) 10 Watt LED A19	10	0.020	88
OHIO PYLE STATE PARK	ELM WASH ROOM		INTERIOR		MENS ROOM	2	Existing LED Fixture; No Retrofit	40	0.080	366	2	No Retrofit	40	0.080	366
OHIO PYLE STATE PARK	ELM WASH ROOM		INTERIOR		CLOSET	1	100 Watt Incandescent A-Lamp & 13 Watt Compact Fluorescent	113	0.113	518	1	Re-Lamp with (2) 10 Watt LED A19	20	0.020	92
OHIO PYLE STATE PARK	ELM WASH ROOM		INTERIOR		CLOSET	1	100 Watt Incandescent 2-Lamp A-Lamp	200	0.200	916	1	Re-Lamp with (2) 18 Watt LED A21	36	0.036	165
OHIO PYLE STATE PARK	ELM WASH ROOM		INTERIOR		WOMENS ROOM	2	Existing LED Fixture; No Retrofit	40	0.080	366	2	No Retrofit	40	0.080	366
OHIO PYLE STATE PARK	ELM WASH ROOM		EXTERIOR		EXTERIOR	2	13 Watt Compact Fluorescent Fixture	13	0.026	114	2	Re-Lamp with (1) 10 Watt LED A19	10	0.020	88
OHIO PYLE STATE PARK	WELLHOUSE		INTERIOR		INTERIOR	5	100 Watt Incandescent A-Lamp & 13 Watt Compact Fluorescent	113	0.565	2,093	5	Re-Lamp with (2) 10 Watt LED A19	20	0.100	370
OHIO PYLE STATE PARK	WELLHOUSE		EXTERIOR		EXTERIOR	1	100 Watt Incandescent A-Lamp Downlight Fixture	100	0.100	438	1	Re-Lamp with (1) 17 Watt LED BR40	17	0.017	74
OHIO PYLE STATE PARK	GINGO		INTERIOR		MENS ROOM	5	T8 1x4 2-Lamp Vaporlight Fixture	62	0.310	1,148	5	Retrofit with (2) 12.5 Watt LED T8 4' Lamps; Direct Wire to Socket	25	0.125	463
OHIO PYLE STATE PARK	GINGO		INTERIOR		MENS ROOM	1	32 Watt Compact Fluorescent Fixture	32	0.032	119	1	Re-Lamp with (1) 10 Watt LED A19	10	0.010	37
OHIO PYLE STATE PARK	GINGO		INTERIOR		MENS ROOM	2	13 Watt Compact Fluorescent Fixture	13	0.026	96	2	Re-Lamp with (1) 10 Watt LED A19	10	0.020	74
OHIO PYLE STATE PARK	GINGO		INTERIOR		WOMENS ROOM	4	T8 1x4 2-Lamp Vanity Fixture	62	0.248	919	4	Retrofit with (2) 12.5 Watt LED T8 4' Lamps; Direct Wire to Socket	25	0.100	370
OHIO PYLE STATE PARK	GINGO		INTERIOR		WOMENS ROOM	1	Existing LED Fixture; No Retrofit	40	0.040	148	1	No Retrofit	40	0.040	148
OHIO PYLE STATE PARK	GINGO		INTERIOR		WOMENS ROOM	1	32 Watt Compact Fluorescent Fixture	32	0.032	119	1	Re-Lamp with (1) 10 Watt LED A19	10	0.010	37
OHIO PYLE STATE PARK	GINGO		EXTERIOR		EXTERIOR	2	50 Watt Metal Halide Wall Pack Fixture	72	0.144	631	2	New 24 Watt LED Wall Pack Fixture; Non-Dark Sky	25	0.050	219
OHIO PYLE STATE PARK	COTTAGE 236		INTERIOR		INTERIOR	1	60 Watt Incandescent 2-Lamp Fixture	120	0.120	444	1	Re-Lamp with (2) 10 Watt LED A19	20	0.020	74
OHIO PYLE STATE PARK	COTTAGE 236		INTERIOR		INTERIOR	1	60 Watt Incandescent 3-Lamp Fixture	180	0.180	667	1	Re-Lamp with (3) 10 Watt LED A19	30	0.030	111
OHIO PYLE STATE PARK	COTTAGE 236		EXTERIOR		EXTERIOR	1	13 Watt Compact Fluorescent Fixture	13	0.013	57	1	Re-Lamp with (1) 10 Watt LED A19	10	0.010	44
OHIO PYLE STATE PARK	COTTAGE 237		INTERIOR		INTERIOR	1	60 Watt Incandescent 2-Lamp Fixture	120	0.120	444	1	Re-Lamp with (2) 10 Watt LED A19	20	0.020	74
OHIO PYLE STATE PARK	COTTAGE 237		INTERIOR		INTERIOR	1	60 Watt Incandescent 3-Lamp Fixture	180	0.180	667	1	Re-Lamp with (3) 10 Watt LED A19	30	0.030	111

©2013 Energy Systems Group, LLC

EXISTING FIXTURES											PROPOSED FIXTURE UPGRADE				
Park/Building Name	Building	Building #	Phase	Floor	Room Description	Qty	Description	Watts	kW	kWh	Qty	Description	Watts	kW	kWh
OHIO PYLE STATE PARK	COTTAGE 237		EXTERIOR		EXTERIOR	1	13 Watt Compact Fluorescent Fixture	13	0.013	57	1	Re-Lamp with (1) 10 Watt LED A19	10	0.010	44
OHIO PYLE STATE PARK	WALL TENT (X3)		INTERIOR		INTERIOR	3	13 Watt Compact Fluorescent Fixture	13	0.039	144	3	Re-Lamp with (1) 10 Watt LED A19	10	0.030	111
OHIO PYLE STATE PARK	HICKORY		INTERIOR		MENS ROOM	1	T12 1x4 2-Lamp Vanity Fixture	72	0.072	267	1	Retrofit with (2) 12.5 Watt LED T8 4' Lamps; Direct Wire to Socket	25	0.025	93
OHIO PYLE STATE PARK	HICKORY		INTERIOR		MENS ROOM	3	T8 1x4 2-Lamp Vanity Fixture	62	0.186	689	3	Retrofit with (2) 12.5 Watt LED T8 4' Lamps; Direct Wire to Socket	25	0.075	278
OHIO PYLE STATE PARK	HICKORY		INTERIOR		MENS ROOM-EMERGENCY FIXTURES	1	42 Watt Compact Fluorescent Fixture	42	0.042	156	1	Re-Lamp with (1) 18 Watt LED A21	18	0.018	67
OHIO PYLE STATE PARK	HICKORY		INTERIOR		PIPE CHASE	2	100 Watt Incandescent A-Lamp Fixture	100	0.200	741	2	Re-Lamp with (1) 18 Watt LED A21	18	0.036	133
OHIO PYLE STATE PARK	HICKORY		INTERIOR		WOMENS ROOM	3	T8 1x4 2-Lamp Vanity Fixture	62	0.186	689	3	Retrofit with (2) 12.5 Watt LED T8 4' Lamps; Direct Wire to Socket	25	0.075	278
OHIO PYLE STATE PARK	HICKORY		INTERIOR		WOMENS ROOM-EMERGENCY FIXTURES	1	42 Watt Compact Fluorescent Fixture	42	0.042	156	1	Re-Lamp with (1) 18 Watt LED A21	18	0.018	67
OHIO PYLE STATE PARK	HICKORY		EXTERIOR		EXTERIOR	2	60 Watt Incandescent A-Lamp Fixture	60	0.120	526	2	Re-Lamp with (1) 10 Watt LED A19	10	0.020	88
OHIO PYLE STATE PARK	HICKORY 2		INTERIOR			2	Existing LED Fixture; No Retrofit	40	0.080	296	2	No Retrofit	40	0.080	296
OHIO PYLE STATE PARK	HICKORY 2		INTERIOR		EMERGENCY	1	42 Watt Compact Fluorescent Wall Pack Fixture	42	0.042	156	1	Re-Lamp with (1) 18 Watt LED A21	18	0.018	67
OHIO PYLE STATE PARK	HICKORY 2		INTERIOR		PIPE CHASE	2	100 Watt Incandescent A-Lamp Fixture	100	0.200	741	2	Re-Lamp with (1) 18 Watt LED A21	18	0.036	133
OHIO PYLE STATE PARK	HICKORY 2		INTERIOR		WOMENS ROOM	3	T8 1x4 2-Lamp Vanity Fixture	62	0.186	689	3	Retrofit with (2) 12.5 Watt LED T8 4' Lamps; Direct Wire to Socket	25	0.075	278
OHIO PYLE STATE PARK	HICKORY 2		INTERIOR		WOMENS ROOM-EMERGENCY FIXTURES	1	42 Watt Compact Fluorescent Fixture	42	0.042	156	1	Re-Lamp with (1) 18 Watt LED A21	18	0.018	67
OHIO PYLE STATE PARK	WASTE WATER TREATMENT		INTERIOR			8	T8 1x8 1-Lamp Vanity Fixture	55	0.440	1,144	8	New 1x8 2-Lamp Vanity Fixture with (2) 12.5 Watt LED T8 4' Lamps; Direct Wire to Socket	25	0.200	520
OHIO PYLE STATE PARK	WASTE WATER TREATMENT		INTERIOR		BACKROOM	2	T8 1x8 1-Lamp Vanity Fixture	55	0.110	286	2	New 1x8 2-Lamp Vanity Fixture with (2) 12.5 Watt LED T8 4' Lamps; Direct Wire to Socket	25	0.050	130
OHIO PYLE STATE PARK	WASTE WATER TREATMENT		INTERIOR			1	T12 1x4 2-Lamp Wrap Fixture	72	0.072	187	1	Retrofit with (2) 12.5 Watt LED T8 4' Lamps; Direct Wire to Socket	25	0.025	65
OHIO PYLE STATE PARK	WASTE WATER TREATMENT		EXTERIOR			1	250 Watt Metal Halide Wall Pack Fixture	295	0.295	1,292	1	New 55 Watt LED Wall Pack Fixture; Non-Dark Sky	57	0.057	250
OHIO PYLE STATE PARK	COTTAGE 197		INTERIOR		INTERIOR	1	100 Watt Incandescent 3-Lamp Fixture	300	0.300	1,111	1	Re-Lamp with (3) 18 Watt LED A21	54	0.054	200
OHIO PYLE STATE PARK	COTTAGE 197		EXTERIOR		EXTERIOR	1	Existing LED Fixture; No Retrofit	40	0.040	175	1	No Retrofit	40	0.040	175
OHIO PYLE STATE PARK	COTTAGE 196		INTERIOR		INTERIOR	1	100 Watt Incandescent 3-Lamp Fixture	300	0.300	1,111	1	Re-Lamp with (3) 18 Watt LED A21	54	0.054	200
OHIO PYLE STATE PARK	COTTAGE 196		EXTERIOR		EXTERIOR	1	Existing LED Fixture; No Retrofit	40	0.040	175	1	No Retrofit	40	0.040	175
OHIO PYLE STATE PARK	COTTAGE 198		INTERIOR		INTERIOR	1	100 Watt Incandescent 3-Lamp Fixture	300	0.300	1,111	1	Re-Lamp with (3) 18 Watt LED A21	54	0.054	200
OHIO PYLE STATE PARK	COTTAGE 198		EXTERIOR		EXTERIOR	1	Existing LED Fixture; No Retrofit	40	0.040	175	1	No Retrofit	40	0.040	175
OHIO PYLE STATE PARK	JUNIPER SHOWER		INTERIOR		SHOWER	4	T8 1x4 2-Lamp Vanity Fixture	62	0.248	1,136	4	Retrofit with (2) 12.5 Watt LED T8 4' Lamps; Direct Wire to Socket	25	0.100	458
OHIO PYLE STATE PARK	JUNIPER SHOWER		INTERIOR		SHOWER	1	42 Watt Compact Fluorescent Fixture	42	0.042	192	1	Re-Lamp with (1) 18 Watt LED A21	18	0.018	82

©2013 Energy Systems Group, LLC

EXISTING FIXTURES											PROPOSED FIXTURE UPGRADE				
Park/Building Name	Building	Building #	Phase	Floor	Room Description	Qty	Description	Watts	kW	kWh	Qty	Description	Watts	kW	kWh
OHIO PYLE STATE PARK	JUNIPER SHOWER		INTERIOR		SHOWER	4	T8 1x4 2-Lamp Vanity Fixture	62	0.248	1,136	4	Retrofit with (2) 12.5 Watt LED T8 4' Lamps; Direct Wire to Socket	25	0.100	458
OHIO PYLE STATE PARK	JUNIPER SHOWER		INTERIOR		SHOWER	1	42 Watt Compact Fluorescent Fixture	42	0.042	192	1	Re-Lamp with (1) 18 Watt LED A21	18	0.018	82
OHIO PYLE STATE PARK	JUNIPER SHOWER		INTERIOR		SHOWER	2	100 Watt Incandescent A-Lamp Fixture	100	0.200	916	2	Re-Lamp with (1) 18 Watt LED A21	18	0.036	165
OHIO PYLE STATE PARK	JUNIPER SHOWER		EXTERIOR		EXTERIOR	1	100 Watt Incandescent A-Lamp Fixture	100	0.100	288	1	Re-Lamp with (1) 18 Watt LED A21	18	0.018	52
OHIO PYLE STATE PARK	OVER FLOW CABIN		INTERIOR		CABIN	2	100 Watt Incandescent 2-Lamp A-Lamp	200	0.400	1,482	2	Re-Lamp with (2) 18 Watt LED A21	36	0.072	267
OHIO PYLE STATE PARK	OVER FLOW CABIN		INTERIOR		CABIN	1	100 Watt Incandescent A-Lamp Fixture	100	0.100	370	1	Re-Lamp with (1) 18 Watt LED A21	18	0.018	67
OHIO PYLE STATE PARK	GROUP SHOWER-MENS		INTERIOR		SHOWER	1	T12 1x4 2-Lamp Vanity Fixture	72	0.072	330	1	Retrofit with (2) 12.5 Watt LED T8 4' Lamps; Direct Wire to Socket	25	0.025	115
OHIO PYLE STATE PARK	GROUP SHOWER-MENS		INTERIOR		SHOWER	8	T8 1x4 2-Lamp Vanity Fixture	62	0.496	2,272	8	Retrofit with (2) 12.5 Watt LED T8 4' Lamps; Direct Wire to Socket	25	0.200	916
OHIO PYLE STATE PARK	GROUP SHOWER-MENS		INTERIOR		PIPE CAHSE	1	60 Watt Incandescent A-Lamp Fixture	60	0.060	60	1	Re-Lamp with (1) 10 Watt LED A19	10	0.010	10
OHIO PYLE STATE PARK	GROUP SHOWER - WOMENS		INTERIOR		SHOWER	10	T8 1x4 2-Lamp Vanity Fixture	62	0.620	2,840	10	Retrofit with (2) 12.5 Watt LED T8 4' Lamps; Direct Wire to Socket	25	0.250	1,145
OHIO PYLE STATE PARK	GROUP SHOWER - WOMENS		INTERIOR		PIPE CAHSE	2	23 Watt Compact Fluorescent Fixture	23	0.046	46	2	Re-Lamp with (1) 10 Watt LED A19	10	0.020	20
OHIO PYLE STATE PARK	GROUP SHOWER - WOMENS		EXTERIOR		EXTERIOR	2	100 Watt Metal Halide Wall Pack Fixture	125	0.250	720	2	New 24 Watt LED Wall Pack Fixture; Non-Dark Sky	25	0.050	144
OHIO PYLE STATE PARK	AMPHITHEATER		INTERIOR		CLOSET	1	13 Watt Compact Fluorescent Downlight	13	0.013	13	1	Re-Lamp with (1) 10 Watt LED BR30	10	0.010	10
OHIO PYLE STATE PARK	AMPHITHEATER		INTERIOR		CLOSET	1	65 Watt Incandescent PAR30 Fixture	65	0.065	65	1	Re-Lamp with (1) 10 Watt LED PAR30	10	0.010	10
OHIO PYLE STATE PARK	AMPHITHEATER		INTERIOR		OPEN AREA	12	60 Watt Incandescent PAR30 Fixture	60	0.720	1,619	12	Re-Lamp with (1) 10 Watt LED PAR30	10	0.120	270
OHIO PYLE STATE PARK	AMPHITHEATER		EXTERIOR		EXTERIOR	2	100 Watt Metal Halide Wall Pack Fixture	125	0.250	540	2	New 24 Watt LED Wall Pack Fixture; Non-Dark Sky	25	0.050	108
OHIO PYLE STATE PARK	SUB MAINTENANCE BUILDING		INTERIOR		ENTRANCE	1	T12 2x4 4-Lamp Troffer Fixture	144	0.144	375	1	Retrofit with (4) 12.5 Watt LED T8 4' Lamps; Direct Wire to Socket	50	0.050	130
OHIO PYLE STATE PARK	SUB MAINTENANCE BUILDING		INTERIOR		REG. ROOM	1	T12 2x4 2-Lamp Troffer Fixture	78	0.078	203	1	Retrofit with (2) 12.5 Watt LED T8 4' Lamps; Direct Wire to Socket	25	0.025	65
OHIO PYLE STATE PARK	SUB MAINTENANCE BUILDING		INTERIOR		OPEN AREA	1	T12 1x4 2-Lamp Fixture	72	0.072	187	1	Retrofit with (2) 12.5 Watt LED T8 4' Lamps; Direct Wire to Socket	25	0.025	65
OHIO PYLE STATE PARK	SUB MAINTENANCE BUILDING		INTERIOR		SHOP	16	T12 1x4 2-Lamp Strip Fixture	72	1.152	2,996	16	Retrofit with (2) 12.5 Watt LED T8 4' Lamps; Direct Wire to Socket	25	0.400	1,040
OHIO PYLE STATE PARK	SUB MAINTENANCE BUILDING		INTERIOR		TIRE ROOM	2	T8 1x4 2-Lamp Industrial Strip Fixture	62	0.124	323	2	Retrofit with (2) 12.5 Watt LED T8 4' Lamps; Direct Wire to Socket	25	0.050	130
OHIO PYLE STATE PARK	CONCESSION		INTERIOR			2	60 Watt Incandescent A-Lamp Fixture	60	0.120	331	2	Re-Lamp with (1) 10 Watt LED A19	10	0.020	55
OHIO PYLE STATE PARK	BARN LIGHT		EXTERIOR			1	42 Watt Compact Fluorescent Fixture	42	0.042	184	1	Re-Lamp with (1) 18 Watt LED A21	18	0.018	79
OHIO PYLE STATE PARK	OLD DAIRY QUEEN		INTERIOR			11	T12 2x4 4-Lamp Troffer Fixture	144	1.584	4,120	11	Retrofit with (4) 12.5 Watt LED T8 4' Lamps; Direct Wire to Socket	50	0.550	1,431
OHIO PYLE STATE PARK	OLD DAIRY QUEEN		INTERIOR		PHOTO	3	T12 2x4 4-Lamp Troffer Fixture	144	0.432	1,124	3	Retrofit with (4) 12.5 Watt LED T8 4' Lamps; Direct Wire to Socket	50	0.150	390
OHIO PYLE STATE PARK	OLD DAIRY QUEEN		INTERIOR		BATHRROM	3	100 Watt Incandescent 3-Lamp Fixture	300	0.900	2,341	3	Re-Lamp with (3) 18 Watt LED A21	54	0.162	421

©2013 Energy Systems Group, LLC

EXISTING FIXTURES											PROPOSED FIXTURE UPGRADE				
Park/Building Name	Building	Building #	Phase	Floor	Room Description	Qty	Description	Watts	kW	kWh	Qty	Description	Watts	kW	kWh
OHIO PYLE STATE PARK	OLD DAIRY QUEEN		INTERIOR		BREAKROOM	1	T12 2x4 4-Lamp Troffer Fixture	144	0.144	375	1	Retrofit with (4) 12.5 Watt LED T8 4' Lamps; Direct Wire to Socket	50	0.050	130
OHIO PYLE STATE PARK	OLD DAIRY QUEEN		EXTERIOR		EXTERIOR	1	65 Watt Incandescent 2-Lamp PAR30	130	0.130	569	1	Re-Lamp with (2) 10 Watt LED PAR30	20	0.020	88
OHIO PYLE STATE PARK	OLD DAIRY QUEEN		EXTERIOR		EXTERIOR	1	13 Watt Compact Fluorescent Fixture	13	0.013	57	1	Re-Lamp with (1) 10 Watt LED A 19	10	0.010	44
OHIO PYLE STATE PARK	OLD DAIRY QUEEN		EXTERIOR		EXTERIOR	1	23 Watt Compact Fluorescent Downlight	23	0.023	101	1	Retrofit with 9 Watt LED 6" Downlight	9	0.009	39
OHIO PYLE STATE PARK	OLD DAIRY QUEEN		INTERIOR		GARAGE	5	T12 1x4 4-Lamp Wrap Fixture	144	0.720	720	5	Retrofit with (4) 12.5 Watt LED T8 4' Lamps; Direct Wire to Socket	50	0.250	250
OHIO PYLE STATE PARK	OLD DAIRY QUEEN		INTERIOR		BASEMENT	13	T8 2x2 2-Lamp U-Lamp Troffer Fixture with 6" Lamps	62	0.806	2,096	13	Retrofit with (2) 10 Watt LED T8 2' Lamps and (1) 2x2 2-Lamp White Reflector Kit; Direct Wire to Socket	20	0.260	676
OHIO PYLE STATE PARK	OLD DAIRY QUEEN		INTERIOR		BASEMENT	1	T8 2x4 3-Lamp Troffer Fixture	84	0.084	218	1	Retrofit with (3) 12.5 Watt LED T8 4' Lamps; Direct Wire to Socket	37.5	0.038	98
OHIO PYLE STATE PARK	OLD DAIRY QUEEN		INTERIOR		BATHROOM	2	T8 2x2 2-Lamp U-Lamp Troffer Fixture with 6" Lamps	62	0.124	323	2	Retrofit with (2) 10 Watt LED T8 2' Lamps and (1) 2x2 2-Lamp White Reflector Kit; Direct Wire to Socket	20	0.040	104
OHIO PYLE STATE PARK	OLD DAIRY QUEEN		INTERIOR		BACK ROOM	1	T12 1x4 2-Lamp Vanity Fixture	72	0.072	187	1	Retrofit with (2) 12.5 Watt LED T8 4' Lamps; Direct Wire to Socket	25	0.025	65
OHIO PYLE STATE PARK	OLD DAIRY QUEEN		INTERIOR		BACK ROOM	2	T8 2x4 3-Lamp Troffer Fixture	84	0.168	437	2	Retrofit with (3) 12.5 Watt LED T8 4' Lamps; Direct Wire to Socket	37.5	0.075	195
OHIO PYLE STATE PARK	OLD DAIRY QUEEN		INTERIOR		INSULATION ROOM	2	T12 1x4 4-Lamp Wrap Fixture	144	0.288	749	2	Retrofit with (4) 12.5 Watt LED T8 4' Lamps; Direct Wire to Socket	50	0.100	260
OHIO PYLE STATE PARK	OLD DAIRY QUEEN		INTERIOR		BACK PORCH	1	No Access; Area(s) Not Included in Scope/Pricing	0	0.000	0	1	No Retrofit	0	0.000	0
OHIO PYLE STATE PARK	OLD DAIRY QUEEN		INTERIOR		SIDE ROOM	9	T8 2x4 4-Lamp Troffer Fixture	106	0.954	2,481	9	Retrofit with (4) 12.5 Watt LED T8 4' Lamps; Direct Wire to Socket	50	0.450	1,170
OHIO PYLE STATE PARK	OLD DAIRY QUEEN		INTERIOR		BATHROOM	1	100 Watt Incandescent 2-Lamp A-Lamp	200	0.200	520	1	Re-Lamp with (2) 18 Watt LED A21	36	0.036	94
OHIO PYLE STATE PARK	OLD DAIRY QUEEN		INTERIOR		ROOM 1	1	T8 1x4 2-Lamp Wrap Fixture	62	0.062	161	1	Retrofit with (2) 12.5 Watt LED T8 4' Lamps; Direct Wire to Socket	25	0.025	65
OHIO PYLE STATE PARK	STORE HOUSE		INTERIOR		CENTRAL ROOM	1	100 Watt Incandescent A-Lamp Fixture	100	0.100	225	1	Re-Lamp with (1) 18 Watt LED A21	18	0.018	40
OHIO PYLE STATE PARK	STORE HOUSE		INTERIOR		CLOSET	1	100 Watt Incandescent A-Lamp Fixture	100	0.100	100	1	Re-Lamp with (1) 18 Watt LED A21	18	0.018	18
OHIO PYLE STATE PARK	STORE HOUSE		INTERIOR		BATHROOM	1	100 Watt Incandescent A-Lamp Fixture	100	0.100	52	1	Re-Lamp with (1) 18 Watt LED A21	18	0.018	9
OHIO PYLE STATE PARK	STORE HOUSE		INTERIOR		CONFERENCE ROOM	1	13 Watt Compact Fluorescent Fixture	13	0.013	29	1	Re-Lamp with (1) 10 Watt LED A 19	10	0.010	22
OHIO PYLE STATE PARK	STORE HOUSE		INTERIOR		CONFERENCE ROOM	2	100 Watt Incandescent 4-Lamp Fixture	400	0.800	1,798	2	Re-Lamp with (4) 18 Watt LED A21	72	0.144	324
OHIO PYLE STATE PARK	STORE HOUSE		INTERIOR		CONFERENCE ROOM	4	42 Watt Compact Fluorescent Fixture	42	0.168	378	4	Re-Lamp with (1) 18 Watt LED A21	18	0.072	162
OHIO PYLE STATE PARK	STORE HOUSE		INTERIOR		ROOM 1	1	60 Watt Incandescent 3-Lamp Fixture	180	0.180	405	1	Re-Lamp with (3) 10 Watt LED A 19	30	0.030	67
OHIO PYLE STATE PARK	STORE HOUSE		INTERIOR		CLOSET	2	100 Watt Incandescent A-Lamp Fixture	100	0.200	200	2	Re-Lamp with (1) 18 Watt LED A21	18	0.036	36
OHIO PYLE STATE PARK	STORE HOUSE		INTERIOR		BATHROOM	2	T8 1x4 4-Lamp Vanity Fixture	106	0.212	477	2	Retrofit with (4) 12.5 Watt LED T8 4' Lamps; Direct Wire to Socket	50	0.100	225
OHIO PYLE STATE PARK	STORE HOUSE		INTERIOR		ROOM 1	1	13 Watt Compact Fluorescent 2-Lamp Fixture	26	0.026	58	1	Re-Lamp with (2) 10 Watt LED A 19	20	0.020	45
OHIO PYLE STATE PARK	STORE HOUSE		INTERIOR		CLOSET	1	T12 1x4 2-Lamp Strip Fixture	72	0.072	72	1	Retrofit with (2) 12.5 Watt LED T8 4' Lamps; Direct Wire to Socket	25	0.025	25

©2013 Energy Systems Group, LLC

EXISTING FIXTURES											PROPOSED FIXTURE UPGRADE				
Park/Building Name	Building	Building #	Phase	Floor	Room Description	Qty	Description	Watts	kW	kWh	Qty	Description	Watts	kW	kWh
OHIO PYLE STATE PARK	STORE HOUSE		INTERIOR		HALLWAY	1	Decorative Specialty Fixture; No Retrofit	0	0.000	0	1	No Retrofit	0	0.000	0
OHIO PYLE STATE PARK	STORE HOUSE		INTERIOR		KITCHEN	1	T12 1x4 2-Lamp Wrap Fixture	72	0.072	162	1	Retrofit with (2) 12.5 Watt LED T8 4' Lamps; Direct Wire to Socket	25	0.025	56
OHIO PYLE STATE PARK	STORE HOUSE		INTERIOR		2ND FLOOR	1	13 Watt Compact Fluorescent Fixture	13	0.013	29	1	Re-Lamp with (1) 10 Watt LED A19	10	0.010	22
OHIO PYLE STATE PARK	STORE HOUSE		EXTERIOR		EXTERIOR	4	13 Watt Compact Fluorescent Fixture	13	0.052	228	4	Re-Lamp with (1) 10 Watt LED A19	10	0.040	175
OHIO PYLE STATE PARK	STORE HOUSE		INTERIOR		BASEMENT	9	13 Watt Compact Fluorescent Fixture	13	0.117	263	9	Re-Lamp with (1) 10 Watt LED A19	10	0.090	202
OHIO PYLE STATE PARK	STORE HOUSE		INTERIOR		DOWNSTAIRS	3	60 Watt Incandescent A-Lamp Fixture	60	0.180	405	3	Re-Lamp with (1) 10 Watt LED A19	10	0.030	67
OHIO PYLE STATE PARK	OLD OFFICE		INTERIOR		MOP ROOM	1	13 Watt Compact Fluorescent Fixture	13	0.013	13	1	Re-Lamp with (1) 10 Watt LED A19	10	0.010	10
OHIO PYLE STATE PARK	OLD OFFICE		INTERIOR		MOP ROOM	1	T12 1x4 2-Lamp Wrap Fixture	72	0.072	72	1	Retrofit with (2) 12.5 Watt LED T8 4' Lamps; Direct Wire to Socket	25	0.025	25
OHIO PYLE STATE PARK	OLD OFFICE		INTERIOR		MENS ROOM	1	T12 1x4 2-Lamp Vanity Fixture	72	0.072	72	1	Retrofit with (2) 12.5 Watt LED T8 4' Lamps; Direct Wire to Socket	25	0.025	25
OHIO PYLE STATE PARK	OLD OFFICE		INTERIOR		OPEN AREA	35	Existing LED Fixture; No Retrofit	40	1.400	3,147	35	No Retrofit	40	1.400	3,147
OHIO PYLE STATE PARK	OLD OFFICE		INTERIOR		BATHROOM	1	65 Watt Incandescent PAR30 Fixture	65	0.065	146	1	Re-Lamp with (1) 10 Watt LED PAR30	10	0.010	22
OHIO PYLE STATE PARK	OLD OFFICE		EXTERIOR		POLE HEAD	4	250 Watt Mercury Vapor Shoebox Fixture	291	1.164	5,098	4	New 125 Watt LED Shoebox Fixture	134	0.536	2,348
OHIO PYLE STATE PARK	OLD OFFICE		EXTERIOR		POLE HEAD	5	175 Watt Metal Halide Shoebox Fixture	213	1.065	4,665	5	New 78 Watt LED Shoebox Fixture	78	0.390	1,708
OHIO PYLE STATE PARK	OLD OFFICE		EXTERIOR		EXTERIOR	3	13 Watt Plug-In CFL Downlight Fixture	13	0.039	171	3	Retrofit with 9 Watt LED 6" Downlight	9	0.027	118
OHIO PYLE STATE PARK	MAITENANCE SHOP		INTERIOR		SHOP #1	8	T8 1x4 2-Lamp Strip Fixture	62	0.496	1,290	8	Retrofit with (2) 12.5 Watt LED T8 4' Lamps; Direct Wire to Socket	25	0.200	520
OHIO PYLE STATE PARK	MAITENANCE SHOP		INTERIOR		SHOP #2	6	T8 1x8 2-Lamp Strip Fixture with 59 Watt Lamps	109	0.654	1,701	6	Retrofit with (4) 12.5 Watt LED T8 4' Lamps and (1) 1x8 4-Lamp Strip Kit; Direct Wire to Socket	50	0.300	780
OHIO PYLE STATE PARK	MAITENANCE SHOP		INTERIOR		SHOP #3	6	T12 1x8 2-Lamp Vaportight Fixture with 75 Watt Lamps	158	0.948	2,466	6	New 1x8 2-Lamp Vaportight Fixture with (4) 12.5 Watt LED T8 4' Lamps; Direct Wire to Socket	50	0.300	780
OHIO PYLE STATE PARK	MAITENANCE SHOP		INTERIOR		SHOP #4	6	T8 1x4 2-Lamp Strip Fixture	62	0.372	968	6	Retrofit with (2) 12.5 Watt LED T8 4' Lamps; Direct Wire to Socket	25	0.150	390
OHIO PYLE STATE PARK	MAITENANCE SHOP		INTERIOR		WORK BENCH	1	T8 1x4 2-Lamp Strip Fixture	62	0.062	161	1	Retrofit with (2) 12.5 Watt LED T8 4' Lamps; Direct Wire to Socket	25	0.025	65
OHIO PYLE STATE PARK	MAITENANCE SHOP		INTERIOR		FURNACE ROOM	3	13 Watt Compact Fluorescent Fixture	13	0.039	39	3	Re-Lamp with (1) 10 Watt LED A19	10	0.030	30
OHIO PYLE STATE PARK	MAITENANCE SHOP		INTERIOR		OPEN AREA	2	T12 1x4 2-Lamp Wrap Fixture	72	0.144	375	2	Retrofit with (2) 12.5 Watt LED T8 4' Lamps; Direct Wire to Socket	25	0.050	130
OHIO PYLE STATE PARK	MAITENANCE SHOP		INTERIOR		OPEN AREA	1	T12 2x4 4-Lamp Troffer Fixture	144	0.144	375	1	Retrofit with (4) 12.5 Watt LED T8 4' Lamps; Direct Wire to Socket	50	0.050	130
OHIO PYLE STATE PARK	MAITENANCE SHOP		INTERIOR		OPEN AREA	1	T12 2x2 2-Lamp Troffer Fixture	78	0.078	203	1	Retrofit with (2) 12.5 Watt LED T8 4' Lamps; Direct Wire to Socket	25	0.025	65
OHIO PYLE STATE PARK	MAITENANCE SHOP		INTERIOR		OFFICE #1	2	T12 2x4 4-Lamp Troffer Fixture	144	0.288	749	2	Retrofit with (4) 12.5 Watt LED T8 4' Lamps; Direct Wire to Socket	50	0.100	260
OHIO PYLE STATE PARK	MAITENANCE SHOP		INTERIOR		OFFIC E #2	2	T12 1x4 2-Lamp Wrap Fixture	72	0.144	375	2	Retrofit with (2) 12.5 Watt LED T8 4' Lamps; Direct Wire to Socket	25	0.050	130
OHIO PYLE STATE PARK	MAITENANCE SHOP		INTERIOR		SHOWER ROOM	7	T12 1x4 2-Lamp Fixture	72	0.504	1,311	7	Retrofit with (2) 12.5 Watt LED T8 4' Lamps; Direct Wire to Socket	25	0.175	455

ESG ENERGY SYSTEMS GROUP
©2013 Energy Systems Group, LLC

EXISTING FIXTURES												PROPOSED FIXTURE UPGRADE				
Park/Building Name	Building	Building #	Phase	Floor	Room Description	Qty	Description	Watts	kW	kWh	Qty	Description	Watts	kW	kWh
OHIO PYLE STATE PARK	MAITENANCE SHOP		INTERIOR		WORK BAY #5	11	T8 1x4 2-Lamp Strip Fixture	62	0.682	1,774	11	Retrofit with (2) 12.5 Watt LED T8 4' Lamps; Direct Wire to Socket	25	0.275	715
OHIO PYLE STATE PARK	MAITENANCE SHOP		INTERIOR		PAINT ROOM	1	100 Watt Incandescent A-Lamp Fixture	100	0.100	260	1	Re-Lamp with (1) 18 Watt LED A21	18	0.018	47
OHIO PYLE STATE PARK	MAITENANCE SHOP		INTERIOR		WORK BAY #6	8	T12 1x4 2-Lamp Strip Fixture	72	0.576	1,498	8	Retrofit with (2) 12.5 Watt LED T8 4' Lamps; Direct Wire to Socket	25	0.200	520
OHIO PYLE STATE PARK	MAITENANCE SHOP		INTERIOR		PARTS ROOM	3	T12 1x4 2-Lamp Industrial Strip Fixture; Turret	72	0.216	562	3	New 1x8 2-Lamp Industrial Fixture with (4) 12.5 Watt LED T8 4' Lamps; Direct Wire to Socket	50	0.150	390
OHIO PYLE STATE PARK	MAITENANCE SHOP		INTERIOR		LIFT ROOM	4	T12 1x4 2-Lamp Strip Fixture	72	0.288	749	4	Retrofit with (2) 12.5 Watt LED T8 4' Lamps; Direct Wire to Socket	25	0.100	260
OHIO PYLE STATE PARK	MAITENANCE SHOP		EXTERIOR		EXTERIOR	11	13 Watt Compact Fluorescent Downlight	13	0.143	626	11	Retrofit with 9 Watt LED 6" Downlight	9	0.099	434
OHIO PYLE STATE PARK	MAITENANCE SHOP		EXTERIOR		BARN LIGHT	1	175 Watt High Pressure Sodium Dusk to Dawn Fixture	210	0.210	920	1	New 26 Watt LED Dusk to Dawn Barnyard Fixture	26	0.026	114
OHIO PYLE STATE PARK	MAITENANCE SHOP		EXTERIOR		JELLY JAR	1	100 Watt Incandescent A-Lamp Fixture	100	0.100	438	1	Re-Lamp with (1) 18 Watt LED A21	18	0.018	79
OHIO PYLE STATE PARK	MAITENANCE SHOP		EXTERIOR		MAINTENANCE SHOP	1	175 Watt Metal Halide 3-Head Shoebox	645	0.645	2,825	1	(3) New 78 Watt LED Shoebox Fixtures	234	0.234	1,025
OHIO PYLE STATE PARK	MAITENANCE SHOP		INTERIOR		SHOP	6	T12 1x4 2-Lamp Strip Fixture	72	0.432	1,124	6	Retrofit with (2) 12.5 Watt LED T8 4' Lamps; Direct Wire to Socket	25	0.150	390
OHIO PYLE STATE PARK	MAITENANCE SHOP		EXTERIOR		EXTERIOR	5	42 Watt Compact Fluorescent Fixture	42	0.210	920	5	Re-Lamp with (1) 18 Watt LED A21	18	0.090	394
OHIO PYLE STATE PARK	GUILDERS BOATERS		INTERIOR			4	T8 1x4 2-Lamp Industrial Strip Fixture	62	0.248	684	4	Retrofit with (2) 12.5 Watt LED T8 4' Lamps; Direct Wire to Socket	25	0.100	276
OHIO PYLE STATE PARK	GUILDERS BOATERS		INTERIOR		CHANGE ROOM	1	42 Watt Plug-In CFL 2-Lamp 8" Downlight	90	0.090	248	1	No Retrofit	90	0.090	248
OHIO PYLE STATE PARK	GUILDERS BOATERS		INTERIOR		MENS ROOM	11	42 Watt Plug-In CFL 2-Lamp 8" Downlight	90	0.990	2,732	11	No Retrofit	90	0.990	2,732
OHIO PYLE STATE PARK	GUILDERS BOATERS		INTERIOR		MENS SHOWER	9	42 Watt Plug-In CFL 2-Lamp 8" Downlight	90	0.810	2,236	9	No Retrofit	90	0.810	2,236
OHIO PYLE STATE PARK	GUILDERS BOATERS		INTERIOR		MENS SHOWER	2	42 Watt Plug-In CFL 2-Lamp 8" Downlight	90	0.180	497	2	No Retrofit	90	0.180	497
OHIO PYLE STATE PARK	GUILDERS BOATERS		EXTERIOR		MENS SHOWER	1	50 Watt Metal Halide 8" Downlight	70	0.070	307	1	Retrofit with 13 Watt LED 8" Downlight	13	0.013	57
OHIO PYLE STATE PARK	GUILDERS BOATERS		INTERIOR		WOMENS SHOWER	11	42 Watt Plug-In CFL 2-Lamp 8" Downlight	90	0.990	2,732	11	No Retrofit	90	0.990	2,732
OHIO PYLE STATE PARK	GUILDERS BOATERS		INTERIOR		WOMENS SHOWER	9	42 Watt Plug-In CFL 2-Lamp 8" Downlight	90	0.810	2,236	9	No Retrofit	90	0.810	2,236
OHIO PYLE STATE PARK	GUILDERS BOATERS		INTERIOR		WOMENS SHOWER	2	42 Watt Plug-In CFL 2-Lamp 8" Downlight	90	0.180	497	2	No Retrofit	90	0.180	497
OHIO PYLE STATE PARK	GUILDERS BOATERS		EXTERIOR		WOMENS SHOWER	2	150 Watt Metal Halide Wall Pack Fixture	180	0.360	1,577	2	New 37 Watt LED Wall Pack Fixture; Non-Dark Sky	39	0.078	342
OHIO PYLE STATE PARK	SHAFTER BARN		INTERIOR		BARN	1	400 Watt Metal Halide Highbay Fixture	455	0.455	1,183	1	New 150 Watt LED High Bay Fixture	150	0.150	390
OHIO PYLE STATE PARK	SHAFTER BARN		INTERIOR		BARN	1	100 Watt Incandescent 2-Lamp PAR38	200	0.200	520	1	Re-Lamp with (2) 17 Watt LED PAR38	34	0.034	88
OHIO PYLE STATE PARK	SHAFTER BARN		EXTERIOR		EXTERIOR	2	Existing LED Fixture; No Retrofit	30	0.060	263	2	No Retrofit	30	0.060	263
OHIO PYLE STATE PARK	SHAFTER BARN		INTERIOR		DOWNSTAIRS	2	T8 1x8 2-Lamp Strip Fixture with 59 Watt Lamps	109	0.218	567	2	Retrofit with (4) 12.5 Watt LED T8 4' Lamps and (1) 1x8 4-Lamp Strip Kit; Direct Wire to Socket	50	0.100	260
OHIO PYLE STATE PARK	SHAFTER BARN		INTERIOR		DOWNSTAIRS	2	T8 1x8 2-Lamp Strip Fixture with 59 Watt Lamps	109	0.218	567	2	Retrofit with (4) 12.5 Watt LED T8 4' Lamps and (1) 1x8 4-Lamp Strip Kit; Direct Wire to Socket	50	0.100	260

©2013 Energy Systems Group, LLC

EXISTING FIXTURES											PROPOSED FIXTURE UPGRADE				
Park/Building Name	Building	Building #	Phase	Floor	Room Description	Qty	Description	Watts	kW	kWh	Qty	Description	Watts	kW	kWh
OHIO PYLE STATE PARK	SHAFTER BARN		INTERIOR		BOTTOM	5	60 Watt Incandescent A-Lamp Fixture	60	0.300	780	5	Re-Lamp with (1) 10 Watt LED A19	10	0.050	130
OHIO PYLE STATE PARK	SHAFTER BARN		INTERIOR		BOTTOM	2	Existing LED Fixture; No Retrofit	40	0.080	208	2	No Retrofit	40	0.080	208
OHIO PYLE STATE PARK	RIDGE BUILDING		INTERIOR		OLD LAUNDRY	4	T12HO 1x8 2-Lamp Strip Fixture with 95 Watt Lamps	207	0.828	2,154	4	Retrofit with (4) 12.5 Watt LED T8 4' Lamps and (1) 1x8 4-Lamp Strip Kit; Direct Wire to Socket	50	0.200	520
OHIO PYLE STATE PARK	RIDGE BUILDING		INTERIOR		OLD LAUNDRY	2	100 Watt Incandescent A-Lamp Fixture	100	0.200	520	2	Re-Lamp with (1) 18 Watt LED A21	18	0.036	94
OHIO PYLE STATE PARK	RIDGE BUILDING		INTERIOR		OLD LAUNDRY	9	T12 1x8 2-Lamp Strip Fixture with 75 Watt Lamps	158	1.422	3,699	9	Retrofit with (4) 12.5 Watt LED T8 4' Lamps and (1) 1x8 4-Lamp Strip Kit; Direct Wire to Socket	50	0.450	1,170
OHIO PYLE STATE PARK	RIDGE BUILDING		INTERIOR		OLD LAUNDRY	1	T8 1x4 2-Lamp Strip Fixture	62	0.062	161	1	Retrofit with (2) 12.5 Watt LED T8 4' Lamps; Direct Wire to Socket	25	0.025	65
OHIO PYLE STATE PARK	RIDGE BUILDING		EXTERIOR		EXTERIOR	2	100 Watt Incandescent PAR38 Fixture	100	0.200	876	2	Re-Lamp with (1) 17 Watt LED PAR38	17	0.034	149
OHIO PYLE STATE PARK	RIDGE BUILDING		EXTERIOR		EXTERIOR	1	50 Watt Metal Halide Wall Pack Fixture	72	0.072	315	1	New 24 Watt LED Wall Pack Fixture; Non-Dark Sky	25	0.025	110
OHIO PYLE STATE PARK	RIDGE BUILDING		EXTERIOR		EXTERIOR	1	100 Watt Incandescent A-Lamp Fixture	100	0.100	438	1	Re-Lamp with (1) 18 Watt LED A21	18	0.018	79
OHIO PYLE STATE PARK	RIDGE BUILDING		EXTERIOR		EXTERIOR	4	13 Watt Compact Fluorescent Downlight	13	0.052	228	4	Retrofit with 9 Watt LED 6" Downlight	9	0.036	158
OHIO PYLE STATE PARK	GARAGE		INTERIOR		GARAGE	9	T12 1x4 2-Lamp Strip Fixture	72	0.648	648	9	Retrofit with (2) 12.5 Watt LED T8 4' Lamps; Direct Wire to Socket	25	0.225	225
OHIO PYLE STATE PARK	GARAGE		EXTERIOR		EXTERIOR	1	175 Watt Metal Halide Dusk to Dawn Fixture	213	0.213	933	1	New 26 Watt LED Dusk to Dawn Barnyard Fixture	26	0.026	114
OHIO PYLE STATE PARK	GARAGE		INTERIOR		GARAGE	4	T12HO 1x8 2-Lamp Strip Fixture with 95 Watt Lamps	207	0.828	828	4	Retrofit with (4) 12.5 Watt LED T8 4' Lamps and (1) 1x8 4-Lamp Strip Kit; Direct Wire to Socket	50	0.200	200
OHIO PYLE STATE PARK	WARMING HUT		INTERIOR			3	100 Watt Incandescent A-Lamp Fixture	100	0.300	1,111	3	Re-Lamp with (1) 18 Watt LED A21	18	0.054	200
OHIO PYLE STATE PARK	WARMING HUT		EXTERIOR		EXTERIOR	1	100 Watt Incandescent A-Lamp Fixture	100	0.100	144	1	Re-Lamp with (1) 18 Watt LED A21	18	0.018	26
OHIO PYLE STATE PARK	WARMING HUT		INTERIOR		RESTROOMS	2	T8 1x4 2-Lamp Vanity Fixture	62	0.124	459	2	Retrofit with (2) 12.5 Watt LED T8 4' Lamps; Direct Wire to Socket	25	0.050	185
OHIO PYLE STATE PARK	WARMING HUT		EXTERIOR		EXTERIOR	1	50 Watt Metal Halide Wall Pack Fixture	72	0.072	104	1	New 24 Watt LED Wall Pack Fixture; Non-Dark Sky	25	0.025	36
OHIO PYLE STATE PARK	RAM CAT		INTERIOR			1	100 Watt Incandescent A-Lamp Fixture	100	0.100	260	1	Re-Lamp with (1) 18 Watt LED A21	18	0.018	47
OHIO PYLE STATE PARK	PRIVATE BOATER CHANGE HOUSE X2		INTERIOR			1	100 Watt Incandescent A-Lamp Fixture	100	0.100	260	1	Re-Lamp with (1) 18 Watt LED A21	18	0.018	47
OHIO PYLE STATE PARK	PRIVATE BOATER CHANGE HOUSE X2		INTERIOR		SHOWER	1	100 Watt Incandescent A-Lamp Fixture	100	0.100	260	1	Re-Lamp with (1) 18 Watt LED A21	18	0.018	47
OHIO PYLE STATE PARK	PRIVATE BOATER CHANGE HOUSE X2		EXTERIOR		EXTERIOR	1	100 Watt Metal Halide Wall Pack Fixture	125	0.125	548	1	New 24 Watt LED Wall Pack Fixture; Non-Dark Sky	25	0.025	110
OHIO PYLE STATE PARK	PRIVATE BOATER CHANGE HOUSE X2		INTERIOR		PIPE CHASE	1	13 Watt Compact Fluorescent Fixture	13	0.013	13	1	Re-Lamp with (1) 10 Watt LED A19	10	0.010	10
OHIO PYLE STATE PARK	VISITOR CENTER		INTERIOR		RESTROOMS	3	Existing LED Fixture; No Retrofit	40	0.120	270	3	No Retrofit	40	0.120	270
OHIO PYLE STATE PARK	VISITOR CENTER		INTERIOR		MENS	3	42 Watt Plug-In CFL 8" Downlight	45	0.135	303	3	No Retrofit	45	0.135	303
OHIO PYLE STATE PARK	VISITOR CENTER		INTERIOR		WOMENS	6	Existing LED Fixture; No Retrofit	40	0.240	540	6	No Retrofit	40	0.240	540
OHIO PYLE STATE PARK	VISITOR CENTER		INTERIOR		WOMENS	3	42 Watt Plug-In CFL 8" Downlight	45	0.135	303	3	No Retrofit	45	0.135	303

©2013 Energy Systems Group, LLC

EXISTING FIXTURES												PROPOSED FIXTURE UPGRADE				
Park/Building Name	Building	Building #	Phase	Floor	Room Description	Qty	Description	Watts	kW	kWh	Qty	Description	Watts	kW	kWh
OHIO PYLE STATE PARK	VISITOR CENTER		INTERIOR		HALLWAY	2	42 Watt Plug-In CFL, 8" Downlight	45	0.090	202	2	No Retrofit	45	0.090	202
OHIO PYLE STATE PARK	VISITOR CENTER		INTERIOR		201	9	42 Watt Plug-In CFL 2-Lamp Decorative Fixture	90	0.810	1,821	9	No Retrofit	90	0.810	1,821
OHIO PYLE STATE PARK	VISITOR CENTER		INTERIOR		HALLWAY	4	42 Watt Plug-In CFL Decorative Fixture	45	0.180	405	4	No Retrofit	45	0.180	405
OHIO PYLE STATE PARK	VISITOR CENTER		INTERIOR		CUSTOMER	1	T8 1x4 2-Lamp Industrial Strip Fixture	62	0.062	139	1	Retrofit with (2) 12.5 Watt LED T8 4' Lamps; Direct Wire to Socket	25	0.025	56
OHIO PYLE STATE PARK	VISITOR CENTER		INTERIOR		206	2	T8 1x4 2-Lamp Strip Fixture	62	0.124	279	2	Retrofit with (2) 12.5 Watt LED T8 4' Lamps; Direct Wire to Socket	25	0.050	112
OHIO PYLE STATE PARK	VISITOR CENTER		INTERIOR		207	2	T8 1x4 2-Lamp Strip Fixture	62	0.124	279	2	Retrofit with (2) 12.5 Watt LED T8 4' Lamps; Direct Wire to Socket	25	0.050	112
OHIO PYLE STATE PARK	VISITOR CENTER		INTERIOR		207	1	Existing LED Fixture; No Retrofit	30	0.030	67	1	No Retrofit	30	0.030	67
OHIO PYLE STATE PARK	VISITOR CENTER		INTERIOR		FRONT DESK	13	42 Watt Plug-In CFL Decorative Fixture	45	0.585	1,315	13	No Retrofit	45	0.585	1,315
OHIO PYLE STATE PARK	VISITOR CENTER		INTERIOR		FRONT DESK	1	42 Watt Plug-In CFL Decorative Fixture	45	0.045	101	1	No Retrofit	45	0.045	101
OHIO PYLE STATE PARK	VISITOR CENTER		INTERIOR		FRONT DESK	16	Existing LED Fixture; No Retrofit	20	0.320	719	16	No Retrofit	20	0.320	719
OHIO PYLE STATE PARK	VISITOR CENTER		INTERIOR		BASEMENT	100	Existing LED Fixture; No Retrofit	20	2.000	4,496	100	No Retrofit	20	2.000	4,496
OHIO PYLE STATE PARK	VISITOR CENTER		INTERIOR		CONFERENCE	15	T8 2x4 2-Lamp Troffer Fixture	62	0.930	2,091	15	Retrofit with (2) 12.5 Watt LED T8 4' Lamps; Direct Wire to Socket	25	0.375	843
OHIO PYLE STATE PARK	VISITOR CENTER		INTERIOR		CONFERENCE	8	42 Watt Plug-In CFL Downlight Fixture	42	0.336	755	8	No Retrofit	42	0.336	755
OHIO PYLE STATE PARK	VISITOR CENTER		INTERIOR		STORAGE	3	T8 2x4 2-Lamp Troffer Fixture	62	0.186	186	3	Retrofit with (2) 12.5 Watt LED T8 4' Lamps; Direct Wire to Socket	25	0.075	75
OHIO PYLE STATE PARK	VISITOR CENTER		INTERIOR		ELECTRICAL - 116	3	T8 1x4 2-Lamp Industrial Strip Fixture	62	0.186	186	3	Retrofit with (2) 12.5 Watt LED T8 4' Lamps; Direct Wire to Socket	25	0.075	75
OHIO PYLE STATE PARK	VISITOR CENTER		INTERIOR		ELECTRICAL	1	T8 1x4 2-Lamp Industrial Strip Fixture	62	0.062	62	1	Retrofit with (2) 12.5 Watt LED T8 4' Lamps; Direct Wire to Socket	25	0.025	25
OHIO PYLE STATE PARK	VISITOR CENTER		INTERIOR		COPY ROOM	2	T8 2x4 2-Lamp Troffer Fixture	62	0.124	279	2	Retrofit with (2) 12.5 Watt LED T8 4' Lamps; Direct Wire to Socket	25	0.050	112
OHIO PYLE STATE PARK	VISITOR CENTER		INTERIOR		113	9	T8 1x4 2-Lamp Industrial Strip Fixture	62	0.558	1,254	9	Retrofit with (2) 12.5 Watt LED T8 4' Lamps; Direct Wire to Socket	25	0.225	506
OHIO PYLE STATE PARK	VISITOR CENTER		INTERIOR		HALLWAY	9	42 Watt Plug-In CFL 8" Downlight	45	0.405	910	9	No Retrofit	45	0.405	910
OHIO PYLE STATE PARK	VISITOR CENTER		INTERIOR		HALLWAY	9	T8 2x4 2-Lamp Troffer Fixture	62	0.558	1,254	9	Retrofit with (2) 12.5 Watt LED T8 4' Lamps; Direct Wire to Socket	25	0.225	506
OHIO PYLE STATE PARK	VISITOR CENTER		INTERIOR		MECHANICAL - 109	6	T8 2x4 2-Lamp Troffer Fixture	62	0.372	372	6	Retrofit with (2) 12.5 Watt LED T8 4' Lamps; Direct Wire to Socket	25	0.150	150
OHIO PYLE STATE PARK	VISITOR CENTER		INTERIOR		104	4	T8 2x4 2-Lamp Troffer Fixture	62	0.248	558	4	Retrofit with (2) 12.5 Watt LED T8 4' Lamps; Direct Wire to Socket	25	0.100	225
OHIO PYLE STATE PARK	VISITOR CENTER		INTERIOR		WOMENS ROOM	2	T8 2x3 2-Lamp Troffer Fixture	49	0.098	220	2	Retrofit with (2) 12 Watt LED T8 3' Lamps; Direct Wire to Socket	24	0.048	108
OHIO PYLE STATE PARK	VISITOR CENTER		INTERIOR		WOMENS ROOM	1	42 Watt Compact Fluorescent Fixture	42	0.042	94	1	Re-Lamp with (1) 18 Watt LED A21	18	0.018	40
OHIO PYLE STATE PARK	VISITOR CENTER		INTERIOR		JANITORS ROOM	1	T8 1x4 2-Lamp Industrial Strip Fixture	62	0.062	62	1	Retrofit with (2) 12.5 Watt LED T8 4' Lamps; Direct Wire to Socket	25	0.025	25
OHIO PYLE STATE PARK	VISITOR CENTER		INTERIOR		MENS ROOM	1	T8 2x3 2-Lamp Troffer Fixture	49	0.049	110	1	Retrofit with (2) 12 Watt LED T8 3' Lamps; Direct Wire to Socket	24	0.024	54

©2013 Energy Systems Group, LLC

EXISTING FIXTURES												PROPOSED FIXTURE UPGRADE				
Park/Building Name	Building	Building #	Phase	Floor	Room Description	Qty	Description	Watts	kW	kWh	Qty	Description	Watts	kW	kWh
OHIO PYLE STATE PARK	VISITOR CENTER		INTERIOR		MENS ROOM	4	42 Watt Plug-In CFL Downlight Fixture	42	0.168	378	4	No Retrofit	42	0.168	378
OHIO PYLE STATE PARK	VISITOR CENTER		INTERIOR		101	3	T8 2x4 2-Lamp Troffer Fixture	62	0.186	418	3	Retrofit with (2) 12.5 Watt LED T8 4' Lamps; Direct Wire to Socket	25	0.075	169
OHIO PYLE STATE PARK	VISITOR CENTER		INTERIOR		100	2	T8 2x4 2-Lamp Troffer Fixture	62	0.124	279	2	Retrofit with (2) 12.5 Watt LED T8 4' Lamps; Direct Wire to Socket	25	0.050	112
OHIO PYLE STATE PARK	VISITOR CENTER		EXTERIOR		EXTERIOR	3	42 Watt Plug-In CFL Downlight Fixture	42	0.126	552	3	Retrofit with 9 Watt LED 6" Downlight	9	0.027	118
OHIO PYLE STATE PARK	VISITOR CENTER		EXTERIOR		EXTERIOR	4	Existing LED Fixture; No Retrofit	40	0.160	701	4	No Retrofit	40	0.160	701
OHIO PYLE STATE PARK	VISITOR CENTER		EXTERIOR		POLE HEAD	14	175 Watt Metal Halide Shoebox Fixture	213	2.982	13,061	14	New 78 Watt LED Shoebox Fixture	78	1.092	4,783
OHIO PYLE STATE PARK	VISITOR CENTER		EXTERIOR		POLE HEAD	13	175 Watt Metal Halide Shoebox Fixture	213	2.769	12,128	13	New 78 Watt LED Shoebox Fixture	78	1.014	4,441
OHIO PYLE STATE PARK	TRAIN STATION		INTERIOR		TRAIN STATION	6	23 Watt Compact Fluorescent Fixture	23	0.138	310	6	Re-Lamp with (1) 10 Watt LED A19	10	0.060	135
OHIO PYLE STATE PARK	TRAIN STATION		INTERIOR		2ND OFFICE	4	T12 1x4 2-Lamp Wrap Fixture	72	0.288	647	4	Retrofit with (2) 12.5 Watt LED T8 4' Lamps; Direct Wire to Socket	25	0.100	225
OHIO PYLE STATE PARK	TRAIN STATION		INTERIOR		2ND OFFICE	1	100 Watt Incandescent A-Lamp Fixture	100	0.100	225	1	Re-Lamp with (1) 18 Watt LED A21	18	0.018	40
OHIO PYLE STATE PARK	TRAIN STATION		INTERIOR		BACK AREA	3	100 Watt Incandescent A-Lamp Fixture	100	0.300	674	3	Re-Lamp with (1) 18 Watt LED A21	18	0.054	121
OHIO PYLE STATE PARK	TRAIN STATION		INTERIOR		HALLWAY AND BACK	9	13 Watt Compact Fluorescent Fixture	13	0.117	263	9	Re-Lamp with (1) 10 Watt LED A19	10	0.090	202
OHIO PYLE STATE PARK	TRAIN STATION		INTERIOR		FRONT AREA	4	100 Watt Incandescent A-Lamp Fixture	100	0.400	899	4	Re-Lamp with (1) 18 Watt LED A21	18	0.072	162
OHIO PYLE STATE PARK	TRAIN STATION		EXTERIOR		WALL PACK	9	50 Watt Metal Halide Wall Pack Fixture	72	0.648	2,838	9	New 24 Watt LED Wall Pack Fixture; Non-Dark Sky	25	0.225	986
OHIO PYLE STATE PARK	ASSISTANT MANAGER HOUSE		INTERIOR		FAN	2	100 Watt Incandescent A-Lamp Fixture	100	0.200	741	2	Re-Lamp with (1) 18 Watt LED A21	18	0.036	133
OHIO PYLE STATE PARK	ASSISTANT MANAGER HOUSE		INTERIOR		FAN	3	100 Watt Incandescent A-Lamp Fixture	100	0.300	1,111	3	Re-Lamp with (1) 18 Watt LED A21	18	0.054	200
OHIO PYLE STATE PARK	ASSISTANT MANAGER HOUSE		INTERIOR		KITCHEN	5	13 Watt Compact Fluorescent Fixture	13	0.065	241	5	Re-Lamp with (1) 10 Watt LED A19	10	0.050	185
OHIO PYLE STATE PARK	ASSISTANT MANAGER HOUSE		INTERIOR		KITCHEN	1	No Access; Area(s) Not Included in Scope/Pricing	0	0.000	0	1	No Retrofit	0	0.000	0
OHIO PYLE STATE PARK	ASSISTANT MANAGER HOUSE		INTERIOR		LAUNDRY	1	13 Watt Compact Fluorescent 2-Lamp Fixture	26	0.026	96	1	Re-Lamp with (2) 10 Watt LED A19	20	0.020	74
OHIO PYLE STATE PARK	ASSISTANT MANAGER HOUSE		INTERIOR		SIDELIGHT	1	13 Watt Compact Fluorescent Fixture	13	0.013	48	1	Re-Lamp with (1) 10 Watt LED A19	10	0.010	37
OHIO PYLE STATE PARK	ASSISTANT MANAGER HOUSE		INTERIOR		RESTROOM	1	13 Watt Compact Fluorescent 4-Lamp Fixture	52	0.052	27	1	Re-Lamp with (4) 10 Watt LED A19	40	0.040	21
OHIO PYLE STATE PARK	ASSISTANT MANAGER HOUSE		INTERIOR		RESTROOM	1	13 Watt Compact Fluorescent Fixture	13	0.013	7	1	Re-Lamp with (1) 10 Watt LED A19	10	0.010	5
OHIO PYLE STATE PARK	ASSISTANT MANAGER HOUSE		INTERIOR		OFFICE	1	13 Watt Compact Fluorescent Fixture	13	0.013	48	1	Re-Lamp with (1) 10 Watt LED A19	10	0.010	37
OHIO PYLE STATE PARK	ASSISTANT MANAGER HOUSE		INTERIOR	2	BASEMENT	3	T8 2x4 2-Lamp Troffer Fixture	62	0.186	689	3	Retrofit with (2) 12.5 Watt LED T8 4' Lamps; Direct Wire to Socket	25	0.075	278
OHIO PYLE STATE PARK	ASSISTANT MANAGER HOUSE		INTERIOR	2	2ND FLOOR	5	13 Watt Compact Fluorescent Fixture	13	0.065	241	5	Re-Lamp with (1) 10 Watt LED A19	10	0.050	185
OHIO PYLE STATE PARK	ASSISTANT MANAGER HOUSE		INTERIOR	2	RESTROOM	1	100 Watt Incandescent 4-Lamp Fixture	400	0.400	209	1	Re-Lamp with (4) 18 Watt LED A21	72	0.072	38

©2013 Energy Systems Group, LLC

EXISTING FIXTURES											PROPOSED FIXTURE UPGRADE				
Park/Building Name	Building	Building #	Phase	Floor	Room Description	Qty	Description	Watts	kW	kWh	Qty	Description	Watts	kW	kWh
OHIO PYLE STATE PARK	ASSISTANT MANAGER HOUSE		INTERIOR	2	RESTROOM	1	13 Watt Compact Fluorescent Fixture	13	0.013	7	1	Re-Lamp with (1) 10 Watt LED A19	10	0.010	5
OHIO PYLE STATE PARK	ASSISTANT MANAGER HOUSE		INTERIOR	2	RESTROOM	4	100 Watt Incandescent A-Lamp Fixture	100	0.400	209	4	Re-Lamp with (1) 18 Watt LED A21	18	0.072	38
OHIO PYLE STATE PARK	ASSISTANT MANAGER HOUSE		INTERIOR	2	HALLWAY	1	13 Watt Compact Fluorescent 2-Lamp Fixture	26	0.026	96	1	Re-Lamp with (2) 10 Watt LED A19	20	0.020	74
OHIO PYLE STATE PARK	ASSISTANT MANAGER HOUSE		EXTERIOR		EXTERIOR	2	13 Watt Compact Fluorescent Fixture	13	0.026	114	2	Re-Lamp with (1) 10 Watt LED A19	10	0.020	88
OHIO PYLE STATE PARK	ASSISTANT MANAGER HOUSE		EXTERIOR		EXTERIOR	1	75 Watt Incandescent PAR38 2-Lamp	150	0.150	657	1	Re-Lamp with (2) 17 Watt LED PAR38	34	0.034	149
OHIO PYLE STATE PARK	RESIDENT MANAGER		INTERIOR	1	1ST FLOOR	8	100 Watt Incandescent A-Lamp Fixture	100	0.800	2,963	8	Re-Lamp with (1) 18 Watt LED A21	18	0.144	533
OHIO PYLE STATE PARK	RESIDENT MANAGER		INTERIOR	1	KITCHEN	1	Existing LED Fixture; No Retrofit	40	0.040	148	1	No Retrofit	40	0.040	148
OHIO PYLE STATE PARK	RESIDENT MANAGER		INTERIOR	1	KITCHEN	1	100 Watt Incandescent A-Lamp Downlight Fixture	100	0.100	370	1	Re-Lamp with (1) 17 Watt LED BR40	17	0.017	63
OHIO PYLE STATE PARK	RESIDENT MANAGER		INTERIOR	1	LAUNDRY	1	100 Watt Incandescent A-Lamp Fixture	100	0.100	370	1	Re-Lamp with (1) 18 Watt LED A21	18	0.018	67
OHIO PYLE STATE PARK	RESIDENT MANAGER		INTERIOR	1	BEDROOM	2	100 Watt Incandescent A-Lamp Fixture	100	0.200	741	2	Re-Lamp with (1) 18 Watt LED A21	18	0.036	133
OHIO PYLE STATE PARK	RESIDENT MANAGER		INTERIOR	1	RESTROOM	1	100 Watt Incandescent 3-Lamp Fixture	300	0.300	1,111	1	Re-Lamp with (3) 18 Watt LED A21	54	0.054	200
OHIO PYLE STATE PARK	RESIDENT MANAGER		INTERIOR	1	RESTROOM	1	100 Watt Incandescent A-Lamp Fixture	100	0.100	370	1	Re-Lamp with (1) 18 Watt LED A21	18	0.018	67
OHIO PYLE STATE PARK	RESIDENT MANAGER		INTERIOR	BASEMENT	BASEMENT	2	100 Watt Incandescent A-Lamp Fixture	100	0.200	741	2	Re-Lamp with (1) 18 Watt LED A21	18	0.036	133
OHIO PYLE STATE PARK	RESIDENT MANAGER		INTERIOR	BASEMENT	BASEMENT	3	Existing LED Fixture; No Retrofit	40	0.120	444	3	No Retrofit	40	0.120	444
OHIO PYLE STATE PARK	RESIDENT MANAGER		INTERIOR	BASEMENT	WORKROOM	1	T8 1-at 4-Lamp Industrial Strip Fixture	106	0.106	393	1	Retrofit with (4) 12.5 Watt LED T8 4' Lamps; Direct Wire to Socket	50	0.050	185
OHIO PYLE STATE PARK	RESIDENT MANAGER		INTERIOR	BASEMENT	BEDROOM	6	100 Watt Incandescent A-Lamp Fixture	100	0.600	2,222	6	Re-Lamp with (1) 18 Watt LED A21	18	0.108	400
OHIO PYLE STATE PARK	RESIDENT MANAGER		INTERIOR	BASEMENT	RESTROOM	1	100 Watt Incandescent 3-Lamp Fixture	300	0.300	1,111	1	Re-Lamp with (3) 18 Watt LED A21	54	0.054	200
OHIO PYLE STATE PARK	RESIDENT MANAGER		INTERIOR	BASEMENT	RESTROOM	1	100 Watt Incandescent A-Lamp Downlight Fixture	100	0.100	370	1	Re-Lamp with (1) 17 Watt LED BR40	17	0.017	63
OHIO PYLE STATE PARK	RESIDENT MANAGER		INTERIOR	BASEMENT	MECHANICAL - 109	1	13 Watt Compact Fluorescent Fixture	13	0.013	13	1	Re-Lamp with (1) 10 Watt LED A19	10	0.010	10
OHIO PYLE STATE PARK	RESIDENT MANAGER		EXTERIOR		PORCH LIGHT	6	100 Watt Incandescent A-Lamp Downlight Fixture	100	0.600	2,628	6	Re-Lamp with (1) 17 Watt LED BR40	17	0.102	447
OHIO PYLE STATE PARK	RESIDENT MANAGER		EXTERIOR		COACH LIGHT	1	100 Watt Incandescent A-Lamp Fixture	100	0.100	438	1	Re-Lamp with (1) 18 Watt LED A21	18	0.018	79
OHIO PYLE STATE PARK	RESIDENT MANAGER		EXTERIOR		JELLY JAR	2	100 Watt Incandescent A-Lamp Fixture	100	0.200	876	2	Re-Lamp with (1) 18 Watt LED A21	18	0.036	158
OHIO PYLE STATE PARK	RESIDENT MANAGER		INTERIOR		BEDROOM	3	100 Watt Incandescent A-Lamp Fixture	100	0.300	1,111	3	Re-Lamp with (1) 18 Watt LED A21	18	0.054	200
OHIO PYLE STATE PARK	RESIDENT MANAGER		INTERIOR		BEDROOM	8	100 Watt Incandescent A-Lamp Downlight Fixture	100	0.800	2,963	8	Re-Lamp with (1) 17 Watt LED BR40	17	0.136	504
OHIO PYLE STATE PARK	RESIDENT MANAGER		INTERIOR		BEDROOM	1	100 Watt Incandescent 3-Lamp Fixture	300	0.300	1,111	1	Re-Lamp with (3) 18 Watt LED A21	54	0.054	200
OHIO PYLE STATE PARK	SHED		INTERIOR		SHED	2	100 Watt Incandescent A-Lamp Fixture	100	0.200	200	2	Re-Lamp with (1) 18 Watt LED A21	18	0.036	36

©2013 Energy Systems Group, LLC

EXISTING FIXTURES											PROPOSED FIXTURE UPGRADE				
Park/Building Name	Building	Building #	Phase	Floor	Room Description	Qty	Description	Watts	kW	kWh	Qty	Description	Watts	kW	kWh
MAURICE K GODDARD			INTERIOR		FRONT	2	T12 2x4 2-Lamp Troffer Fixture	78	0.156	351	2	Retrofit with (2) 12.5 Watt LED T8 4' Lamps; Direct Wire to Socket	25	0.050	112
MAURICE K GODDARD			INTERIOR		HALLWAY	6	Existing LED Fixture; No Retrofit	10	0.060	135	6	No Retrofit	10	0.060	135
MAURICE K GODDARD			INTERIOR		OFFICE	2	T12 2x4 2-Lamp Troffer Fixture	78	0.156	351	2	Retrofit with (2) 12.5 Watt LED T8 4' Lamps; Direct Wire to Socket	25	0.050	112
MAURICE K GODDARD			INTERIOR		OFFICE	1	T12 2x4 2-Lamp Troffer Fixture	78	0.078	175	1	Retrofit with (2) 12.5 Watt LED T8 4' Lamps; Direct Wire to Socket	25	0.025	56
MAURICE K GODDARD			INTERIOR		OFFICE	3	T12 2x4 2-Lamp Troffer Fixture	78	0.234	526	3	Retrofit with (2) 12.5 Watt LED T8 4' Lamps; Direct Wire to Socket	25	0.075	169
MAURICE K GODDARD			INTERIOR		RECORDS OFFICE	2	Existing LED Fixture; No Retrofit	30	0.060	135	2	No Retrofit	30	0.060	135
MAURICE K GODDARD			INTERIOR		BILL WASSER	1	No Access; Area(s) Not Included in Scope/Pricing	0	0.000	0	1	No Retrofit	0	0.000	0
MAURICE K GODDARD			INTERIOR		BATHROOM	1	Existing LED Fixture; No Retrofit	30	0.030	16	1	No Retrofit	30	0.030	16
MAURICE K GODDARD			INTERIOR		BREAK ROOM	6	T8 2x4 4-Lamp Surface Mount Fixture	106	0.636	1,430	6	Retrofit with (4) 12.5 Watt LED T8 4' Lamps; Direct Wire to Socket	50	0.300	674
MAURICE K GODDARD			INTERIOR		BATHROOM	2	Existing LED Fixture; No Retrofit	40	0.080	180	2	No Retrofit	40	0.080	180
MAURICE K GODDARD			INTERIOR		BATHROOM	2	60 Watt Incandescent A-Lamp Jelly Jar Fixture	60	0.120	270	2	Re-Lamp with (1) 10 Watt LED A19	10	0.020	45
MAURICE K GODDARD			INTERIOR		MECHANICAL ROOM	2	100 Watt Incandescent A-Lamp Fixture	100	0.200	200	2	Re-Lamp with (1) 18 Watt LED A21	18	0.036	36
MAURICE K GODDARD			INTERIOR		MECHANICAL ROOM	2	13 Watt Compact Fluorescent Fixture	13	0.026	26	2	Re-Lamp with (1) 10 Watt LED A19	10	0.020	20
MAURICE K GODDARD			INTERIOR		SHOP	35	Existing LED Fixture; No Retrofit	30	1.050	2,360	35	No Retrofit	30	1.050	2,360
MAURICE K GODDARD			INTERIOR		OFFICE	1	Existing LED Fixture; No Retrofit	40	0.040	90	1	No Retrofit	40	0.040	90
MAURICE K GODDARD			INTERIOR		SHOP	16	Existing LED Fixture; No Retrofit	30	0.480	1,079	16	No Retrofit	30	0.480	1,079
MAURICE K GODDARD			EXTERIOR		EXTERIOR	4	100 Watt Incandescent A-Lamp Fixture	100	0.400	1,752	4	Re-Lamp with (1) 18 Watt LED A21	18	0.072	315
MAURICE K GODDARD			EXTERIOR		EXTERIOR	2	100 Watt Incandescent A-Lamp Downlight Fixture	100	0.200	876	2	Re-Lamp with (1) 17 Watt LED BR40	17	0.034	149
MAURICE K GODDARD			EXTERIOR		POLE HEAD	2	400 Watt Mercury Vapor Shoebox Fixture	455	0.910	3,986	2	New 150 Watt LED Shoebox Fixture	155	0.310	1,358
MAURICE K GODDARD	CHEMICALS		INTERIOR		CHEMICAL ROOM	2	Existing LED Fixture; No Retrofit	10	0.020	20	2	No Retrofit	10	0.020	20
MAURICE K GODDARD	OLD SHOP		INTERIOR		OLD SHOP	8	T12 1x4 2-Lamp Industrial Strip Fixture	72	0.576	1,498	8	Retrofit with (2) 12.5 Watt LED T8 4' Lamps; Direct Wire to Socket	25	0.200	520
MAURICE K GODDARD	OLD SHOP		INTERIOR		WORKBAY	2	100 Watt Incandescent A-Lamp Fixture	100	0.200	520	2	Re-Lamp with (1) 18 Watt LED A21	18	0.036	94
MAURICE K GODDARD	OLD SHOP		INTERIOR		UPSTAIRS	7	100 Watt Incandescent A-Lamp Fixture	100	0.700	1,821	7	Re-Lamp with (1) 18 Watt LED A21	18	0.126	328
MAURICE K GODDARD			INTERIOR		LUNCH 4 RESTROOMS	2	T8 1x4 2-Lamp Vaportight Fixture	62	0.124	279	2	Retrofit with (2) 12.5 Watt LED T8 4' Lamps; Direct Wire to Socket	25	0.050	112
MAURICE K GODDARD			INTERIOR		STORAGE	1	T8 1x4 2-Lamp Vaportight Fixture	62	0.062	62	1	Retrofit with (2) 12.5 Watt LED T8 4' Lamps; Direct Wire to Socket	25	0.025	25
MAURICE K GODDARD			EXTERIOR		EXTERIOR	2	50 Watt Metal Halide Wall Pack Fixture	72	0.144	631	2	New 24 Watt LED Wall Pack Fixture; Non-Dark Sky	25	0.050	219

©2013 Energy Systems Group, LLC

EXISTING FIXTURES											PROPOSED FIXTURE UPGRADE				
Park/Building Name	Building	Building #	Phase	Floor	Room Description	Qty	Description	Watts	kW	kWh	Qty	Description	Watts	kW	kWh
MAURICE K GODDARD			INTERIOR		LUNCH 4 RESTROOMS	2	T8 1x4 2-Lamp Vaportight Fixture	62	0.124	279	2	Retrofit with (2) 12.5 Watt LED T8 4' Lamps; Direct Wire to Socket	25	0.050	112
MAURICE K GODDARD			INTERIOR		STORAGE	1	T8 1x4 2-Lamp Vaportight Fixture	62	0.062	62	1	Retrofit with (2) 12.5 Watt LED T8 4' Lamps; Direct Wire to Socket	25	0.025	25
MAURICE K GODDARD			EXTERIOR		EXTERIOR	2	50 Watt Metal Halide Wall Pack Fixture	72	0.144	631	2	New 24 Watt LED Wall Pack Fixture; Non-Dark Sky	25	0.050	219
MAURICE K GODDARD	HILL BUILDING		INTERIOR		HILL BUILDING	6	100 Watt Incandescent A-Lamp Fixture	100	0.600	2,222	6	Re-Lamp with (1) 18 Watt LED A21	18	0.108	400
MAURICE K GODDARD	HILL BUILDING		EXTERIOR		EXTERIOR	2	100 Watt Mercury Vapor Dusk to Dawn Fixture	130	0.260	1,139	2	New 26 Watt LED Dusk to Dawn Barnyard Fixture	26	0.052	228
MAURICE K GODDARD	DAM BATHROOMS		INTERIOR		BATHROOMS	2	T8 1x4 2-Lamp Vanity Fixture	62	0.124	342	2	Retrofit with (2) 12.5 Watt LED T8 4' Lamps; Direct Wire to Socket	25	0.050	138
MAURICE K GODDARD	DAM BATHROOMS		INTERIOR		STORAGE	1	T8 1x4 2-Lamp Vanity Fixture	62	0.062	62	1	Retrofit with (2) 12.5 Watt LED T8 4' Lamps; Direct Wire to Socket	25	0.025	25
MAURICE K GODDARD	DAM BATHROOMS		INTERIOR		BATHROOMS	2	T8 1x4 2-Lamp Vanity Fixture	62	0.124	342	2	Retrofit with (2) 12.5 Watt LED T8 4' Lamps; Direct Wire to Socket	25	0.050	138
MAURICE K GODDARD	DAM BATHROOMS		INTERIOR		STORAGE	1	T8 1x4 2-Lamp Vanity Fixture	62	0.062	62	1	Retrofit with (2) 12.5 Watt LED T8 4' Lamps; Direct Wire to Socket	25	0.025	25
MAURICE K GODDARD	MARINA		EXTERIOR		MARINA PARKING LOT	3	250 Watt Mercury Vapor Cobra Head Fixture	291	0.873	3,824	3	New 95 Watt LED Cobra Head Fixture	93	0.279	1,222
MAURICE K GODDARD	MARINA		EXTERIOR		MARINA AREA	10	250 Watt Metal Halide Shoebox Fixture	295	2.950	12,921	10	New 125 Watt LED Shoebox Fixture	134	1.340	5,869
MAURICE K GODDARD	MARINA		EXTERIOR		MARINA AREA	1	250 Watt Metal Halide 2-Head Shoebox Fixture	590	0.590	2,584	1	(2) New 125 Watt LED Shoebox Fixtures	268	0.268	1,174
MAURICE K GODDARD	MARINA		EXTERIOR		CHANGING AREA POLE	5	250 Watt Mercury Vapor Shoebox Fixture	291	1.455	6,373	5	New 125 Watt LED Shoebox Fixture	134	0.670	2,935
MAURICE K GODDARD	MARINA		EXTERIOR		CHANGING AREA DECO UPLIGHT	29	100 Watt Metal Halide Wall Pack Fixture; Decorative	125	3.625	15,878	29	Re-Lamp with (1) 27 Watt LED Omni-Cob Lamp; Hardwire Ballast	27	0.783	3,430
MAURICE K GODDARD	MARINA		EXTERIOR		CANS	18	42 Watt Compact Fluorescent 10" Downlight Fixture	42	0.756	3,311	18	Re-Lamp with (1) 17 Watt LED BR40	17	0.306	1,340
MAURICE K GODDARD	MARINA		INTERIOR		MENS ROOM	5	T12 1x4 2-Lamp Wrap Fixture	72	0.360	994	5	Retrofit with (2) 12.5 Watt LED T8 4' Lamps; Direct Wire to Socket	25	0.125	345
MAURICE K GODDARD	MARINA		INTERIOR		STORAGE	1	100 Watt Incandescent A-Lamp Fixture	100	0.100	100	1	Re-Lamp with (1) 18 Watt LED A21	18	0.018	18
MAURICE K GODDARD	MARINA		INTERIOR		MENS ROOM	5	T12 1x4 2-Lamp Wrap Fixture	72	0.360	994	5	Retrofit with (2) 12.5 Watt LED T8 4' Lamps; Direct Wire to Socket	25	0.125	345
MAURICE K GODDARD	MARINA		INTERIOR		STORAGE	1	100 Watt Incandescent A-Lamp Fixture	100	0.100	100	1	Re-Lamp with (1) 18 Watt LED A21	18	0.018	18
MAURICE K GODDARD	POINT AREA		INTERIOR		POINT AREA RESTROOM	3	23 Watt Compact Fluorescent Fixture	23	0.069	190	3	Re-Lamp with (1) 10 Watt LED A19	10	0.030	83
MAURICE K GODDARD	POINT AREA		INTERIOR		POINT AREA RESTROOM	1	100 Watt Incandescent A-Lamp Jelly Jar Fixture	100	0.100	276	1	Re-Lamp with (1) 18 Watt LED A21	18	0.018	50
MAURICE K GODDARD	POINT AREA		INTERIOR		POINT AREA RESTROOM	4	100 Watt Incandescent 2-Lamp A-Lamp	200	0.800	2,208	4	Re-Lamp with (2) 18 Watt LED A21	36	0.144	397
MAURICE K GODDARD	POINT AREA		EXTERIOR		POLE	1	250 Watt Mercury Vapor Shoebox Fixture	291	0.291	1,275	1	New 125 Watt LED Shoebox Fixture	134	0.134	587
MAURICE K GODDARD	POINT AREA		EXTERIOR		BARN LIGHT	2	250 Watt Mercury Vapor Dusk to Dawn Fixture	291	0.582	2,549	2	New 26 Watt LED Dusk to Dawn Barnyard Fixture	26	0.052	228
MAURICE K GODDARD	LAUNCH AREA		INTERIOR		BATHROOM	4	100 Watt Incandescent A-Lamp Fixture	100	0.400	1,104	4	Re-Lamp with (1) 18 Watt LED A21	18	0.072	199
MAURICE K GODDARD	LAUNCH AREA		INTERIOR		BATHROOM	4	100 Watt Incandescent A-Lamp Fixture	100	0.400	1,104	4	Re-Lamp with (1) 18 Watt LED A21	18	0.072	199

©2013 Energy Systems Group, LLC

EXISTING FIXTURES											PROPOSED FIXTURE UPGRADE				
Park/Building Name	Building	Building #	Phase	Floor	Room Description	Qty	Description	Watts	kW	kWh	Qty	Description	Watts	kW	kWh
MAURICE K GODDARD	LAUNCH AREA		INTERIOR		JELLY JAR	1	100 Watt Incandescent A-Lamp Jelly Jar Fixture	100	0.100	276	1	Re-Lamp with (1) 18 Watt LED A21	18	0.018	50
MAURICE K GODDARD	LAUNCH AREA		INTERIOR		JELLY JAR	1	100 Watt Incandescent A-Lamp Jelly Jar Fixture	100	0.100	276	1	Re-Lamp with (1) 18 Watt LED A21	18	0.018	50
MAURICE K GODDARD	LAUNCH AREA		INTERIOR		STORAGE	3	100 Watt Incandescent A-Lamp Fixture	100	0.300	300	3	Re-Lamp with (1) 18 Watt LED A21	18	0.054	54
MAURICE K GODDARD	LAUNCH AREA		EXTERIOR		POLE LIGHTS	2	250 Watt Mercury Vapor Shoebox Fixture	291	0.582	2,549	2	New 125 Watt LED Shoebox Fixture	134	0.268	1,174
MAURICE K GODDARD	WELLHOUSE		INTERIOR		WELLHOUSE	3	13 Watt Compact Fluorescent Fixture	13	0.039	108	3	Re-Lamp with (1) 10 Watt LED A19	10	0.030	83
MAURICE K GODDARD	WELLHOUSE		EXTERIOR		WALLPACK	1	250 Watt Metal Halide Wall Pack Fixture	295	0.295	1,292	1	New 55 Watt LED Wall Pack Fixture; Non-Dark Sky	57	0.057	250
CLEAR CREEK STATE PARK	OFFICE		INTERIOR		OFFICE	8	Existing LED Fixture; No Retrofit	30	0.240	540	8	No Retrofit	30	0.240	540
CLEAR CREEK STATE PARK	OFFICE		INTERIOR		HALLWAY	2	Existing LED Fixture; No Retrofit	30	0.060	135	2	No Retrofit	30	0.060	135
CLEAR CREEK STATE PARK	OFFICE		INTERIOR		WOMENS RESTROOM	1	60 Watt Incandescent A-Lamp Jelly Jar Fixture	60	0.060	135	1	Re-Lamp with (1) 10 Watt LED A19	10	0.010	22
CLEAR CREEK STATE PARK	OFFICE		INTERIOR		MENS RESTROOM	1	60 Watt Incandescent A-Lamp Jelly Jar Fixture	60	0.060	135	1	Re-Lamp with (1) 10 Watt LED A19	10	0.010	22
CLEAR CREEK STATE PARK	OFFICE		INTERIOR		PHONE CLOSET	1	60 Watt Incandescent A-Lamp Fixture	60	0.060	60	1	Re-Lamp with (1) 10 Watt LED A19	10	0.010	10
CLEAR CREEK STATE PARK	OFFICE		INTERIOR		VESTIBULE	1	60 Watt Incandescent 2-Lamp Fixture	120	0.120	270	1	Re-Lamp with (2) 10 Watt LED A19	20	0.020	45
CLEAR CREEK STATE PARK	OFFICE		INTERIOR		OFFICE	3	Existing LED Fixture; No Retrofit	30	0.090	202	3	No Retrofit	30	0.090	202
CLEAR CREEK STATE PARK	OFFICE		INTERIOR		OFFICE	3	T12 1x4 2-Lamp Wrap Fixture	72	0.216	486	3	Retrofit with (2) 12.5 Watt LED T8 4' Lamps; Direct Wire to Socket	25	0.075	169
CLEAR CREEK STATE PARK	OFFICE		INTERIOR		CLOSET	1	60 Watt Incandescent A-Lamp Fixture	60	0.060	60	1	Re-Lamp with (1) 10 Watt LED A19	10	0.010	10
CLEAR CREEK STATE PARK	OFFICE		INTERIOR		KITCHEN	1	Existing LED Fixture; No Retrofit	30	0.030	67	1	No Retrofit	30	0.030	67
CLEAR CREEK STATE PARK	OFFICE		INTERIOR		LOCKERS	1	T12 1x4 4-Lamp Wrap Fixture	144	0.144	324	1	Retrofit with (4) 12.5 Watt LED T8 4' Lamps; Direct Wire to Socket	50	0.050	112
CLEAR CREEK STATE PARK	OFFICE		EXTERIOR		EXTERIOR FRONT	1	16 Watt Compact Fluorescent Fixture	16	0.016	70	1	Re-Lamp with (1) 10 Watt LED A19	10	0.010	44
CLEAR CREEK STATE PARK	OFFICE		EXTERIOR		EXTERIOR FRONT	1	100 Watt Quartz Flood Fixture	100	0.100	438	1	New 26 Watt LED Flood Fixture	27	0.027	118
CLEAR CREEK STATE PARK	OFFICE		EXTERIOR		EXTERIOR FRONT	1	60 Watt Incandescent PAR30 2-Lamp Fixture	120	0.120	526	1	Re-Lamp with (2) 10 Watt LED PAR30	20	0.020	88
CLEAR CREEK STATE PARK	OFFICE		EXTERIOR		EXTERIOR BACK	1	175 Watt Metal Halide Dusk to Dawn Fixture	213	0.213	933	1	New 26 Watt LED Dusk to Dawn Barnyard Fixture	26	0.026	114
CLEAR CREEK STATE PARK	OFFICE		EXTERIOR		EXTERIOR BACK	1	Existing LED Fixture; No Retrofit	40	0.040	175	1	No Retrofit	40	0.040	175
CLEAR CREEK STATE PARK	CREEK SHED STORAGE		INTERIOR		GARAGE	10	T8 1x4 2-Lamp Industrial Strip Fixture	62	0.620	620	10	Retrofit with (2) 12.5 Watt LED T8 4' Lamps; Direct Wire to Socket	25	0.250	250
CLEAR CREEK STATE PARK	CREEK SHED STORAGE		EXTERIOR		EXTERIOR LEFT	1	100 Watt Incandescent A-Lamp Fixture	100	0.100	438	1	Re-Lamp with (1) 18 Watt LED A21	18	0.018	79
CLEAR CREEK STATE PARK	CREEK SHED STORAGE		EXTERIOR		EXTERIOR FRONT	1	100 Watt Incandescent A-Lamp Fixture	100	0.100	438	1	Re-Lamp with (1) 18 Watt LED A21	18	0.018	79
CLEAR CREEK STATE PARK	EQUIPMENT BUILDING		INTERIOR		BAY	2	100 Watt Incandescent A-Lamp Fixture	100	0.200	520	2	Re-Lamp with (1) 18 Watt LED A21	18	0.036	94

©2013 Energy Systems Group, LLC

EXISTING FIXTURES											PROPOSED FIXTURE UPGRADE				
Park/Building Name	Building	Building #	Phase	Floor	Room Description	Qty	Description	Watts	kW	kWh	Qty	Description	Watts	kW	kWh
CLEAR CREEK STATE PARK	EQUIPMENT BUILDING		INTERIOR		BAY	2	100 Watt Incandescent A-Lamp Fixture	100	0.200	520	2	Re-Lamp with (1) 18 Watt LED A21	18	0.036	94
CLEAR CREEK STATE PARK	EQUIPMENT BUILDING		EXTERIOR		EXTERIOR	1	75 Watt Incandescent PAR38 2-Lamp	150	0.150	657	1	Re-Lamp with (2) 17 Watt LED PAR38	34	0.034	149
CLEAR CREEK STATE PARK	OIL SHED		INTERIOR		SHED	4	100 Watt Incandescent A-Lamp Jelly Jar Fixture	100	0.400	400	4	Re-Lamp with (1) 18 Watt LED A21	18	0.072	72
CLEAR CREEK STATE PARK	OIL SHED		EXTERIOR		EXTERIOR	1	100 Watt Incandescent A-Lamp Fixture	100	0.100	438	1	Re-Lamp with (1) 18 Watt LED A21	18	0.018	79
CLEAR CREEK STATE PARK	MAIN MAINTENANCE SHOP		INTERIOR		BREAK AREA	6	T12 2x4 4-Lamp Troffer Fixture	144	0.864	2,247	6	Retrofit with (4) 12.5 Watt LED T8 4' Lamps; Direct Wire to Socket	50	0.300	780
CLEAR CREEK STATE PARK	MAIN MAINTENANCE SHOP		INTERIOR		VESTIBULE	3	T12 2x4 4-Lamp Troffer Fixture	144	0.432	1,124	3	Retrofit with (4) 12.5 Watt LED T8 4' Lamps; Direct Wire to Socket	50	0.150	390
CLEAR CREEK STATE PARK	MAIN MAINTENANCE SHOP		INTERIOR		OFFICE	1	T12 2x4 4-Lamp Troffer Fixture; Damaged	144	0.144	375	1	New 2x4 2-Lamp Lay-in Troffer Fixture with (2) 12.5 Watt LED T8 4' Lamp; Direct Wire to Socket	25	0.025	65
CLEAR CREEK STATE PARK	MAIN MAINTENANCE SHOP		INTERIOR		GARAGE	12	Existing LED Fixture; No Retrofit	30	0.360	936	12	No Retrofit	30	0.360	936
CLEAR CREEK STATE PARK	MAIN MAINTENANCE SHOP		INTERIOR		GARAGE	1	Existing LED Fixture; No Retrofit	40	0.040	104	1	No Retrofit	40	0.040	104
CLEAR CREEK STATE PARK	MAIN MAINTENANCE SHOP		INTERIOR		GARAGE	1	T12 1x4 2-Lamp Industrial Strip Fixture	72	0.072	187	1	Retrofit with (2) 12.5 Watt LED T8 4' Lamps; Direct Wire to Socket	25	0.025	65
CLEAR CREEK STATE PARK	MAIN MAINTENANCE SHOP		INTERIOR		STORAGE	1	23 Watt Compact Fluorescent Fixture	23	0.023	23	1	Re-Lamp with (1) 10 Watt LED A19	10	0.010	10
CLEAR CREEK STATE PARK	MAIN MAINTENANCE SHOP		INTERIOR		RESTROOM	2	100 Watt Incandescent A-Lamp Fixture	100	0.200	520	2	Re-Lamp with (1) 18 Watt LED A21	18	0.036	94
CLEAR CREEK STATE PARK	YURT		INTERIOR		YURT	1	60 Watt Incandescent A-Lamp Fixture	60	0.060	222	1	Re-Lamp with (1) 10 Watt LED A19	10	0.010	37
CLEAR CREEK STATE PARK	YURT		INTERIOR		YURT	1	T12 1x4 2-Lamp Industrial Strip Fixture	72	0.072	267	1	Retrofit with (2) 12.5 Watt LED T8 4' Lamps; Direct Wire to Socket	25	0.025	93
CLEAR CREEK STATE PARK	YURT		INTERIOR		YURT	1	60 Watt Incandescent A-Lamp Fixture	60	0.060	222	1	Re-Lamp with (1) 10 Watt LED A19	10	0.010	37
CLEAR CREEK STATE PARK	YURT		INTERIOR		YURT	1	60 Watt Incandescent A-Lamp Fixture	60	0.060	222	1	Re-Lamp with (1) 10 Watt LED A19	10	0.010	37
CLEAR CREEK STATE PARK	YURT		INTERIOR		YURT	1	T12 1x4 2-Lamp Industrial Strip Fixture	72	0.072	267	1	Retrofit with (2) 12.5 Watt LED T8 4' Lamps; Direct Wire to Socket	25	0.025	93
CLEAR CREEK STATE PARK	YURT		INTERIOR		YURT	1	60 Watt Incandescent A-Lamp Fixture	60	0.060	222	1	Re-Lamp with (1) 10 Watt LED A19	10	0.010	37
CLEAR CREEK STATE PARK	YURT		INTERIOR		YURT	1	T12 1x4 2-Lamp Industrial Strip Fixture	72	0.072	267	1	Retrofit with (2) 12.5 Watt LED T8 4' Lamps; Direct Wire to Socket	25	0.025	93
CLEAR CREEK STATE PARK	YURT		INTERIOR		YURT	1	60 Watt Incandescent A-Lamp Fixture	60	0.060	222	1	Re-Lamp with (1) 10 Watt LED A19	10	0.010	37
CLEAR CREEK STATE PARK	CABIN	23	INTERIOR		KITCHEN	2	T12 1x4 2-Lamp Industrial Strip Fixture	72	0.144	533	2	Retrofit with (2) 12.5 Watt LED T8 4' Lamps; Direct Wire to Socket	25	0.050	185
CLEAR CREEK STATE PARK	CABIN	23	EXTERIOR		EXTERIOR	1	60 Watt Incandescent A-Lamp Fixture	60	0.060	263	1	Re-Lamp with (1) 10 Watt LED A19	10	0.010	44
CLEAR CREEK STATE PARK	CABIN	10	INTERIOR		KITCHEN	2	T12 1x4 2-Lamp Industrial Strip Fixture	72	0.144	533	2	Retrofit with (2) 12.5 Watt LED T8 4' Lamps; Direct Wire to Socket	25	0.050	185
CLEAR CREEK STATE PARK	CABIN	10	INTERIOR		BED	1	T12 1x4 2-Lamp Vanity Fixture	72	0.072	267	1	Retrofit with (2) 12.5 Watt LED T8 4' Lamps; Direct Wire to Socket	25	0.025	93
CLEAR CREEK STATE PARK	CABIN	10	EXTERIOR		EXTERIOR	1	60 Watt Incandescent A-Lamp Fixture	60	0.060	263	1	Re-Lamp with (1) 10 Watt LED A19	10	0.010	44
CLEAR CREEK STATE PARK	CABIN	11	INTERIOR		KITCHEN	2	T12 1x4 2-Lamp Industrial Strip Fixture	72	0.144	533	2	Retrofit with (2) 12.5 Watt LED T8 4' Lamps; Direct Wire to Socket	25	0.050	185
CLEAR CREEK STATE PARK	CABIN	11	INTERIOR		BED	1	T12 1x4 2-Lamp Vanity Fixture	72	0.072	267	1	Retrofit with (2) 12.5 Watt LED T8 4' Lamps; Direct Wire to Socket	25	0.025	93
CLEAR CREEK STATE PARK	CABIN	11	INTERIOR		BED	1	T12 1x4 2-Lamp Vanity Fixture	72	0.072	267	1	Retrofit with (2) 12.5 Watt LED T8 4' Lamps; Direct Wire to Socket	25	0.025	93

©2013 Energy Systems Group, LLC

EXISTING FIXTURES											PROPOSED FIXTURE UPGRADE				
Park/Building Name	Building	Building #	Phase	Floor	Room Description	Qty	Description	Watts	kW	kWh	Qty	Description	Watts	kW	kWh
CLEAR CREEK STATE PARK	CABIN	11	EXTERIOR		EXTERIOR	1	60 Watt Incandescent A-Lamp Fixture	60	0.060	263	1	Re-Lamp with (1) 10 Watt LED A19	10	0.010	44
CLEAR CREEK STATE PARK	CABIN	12	INTERIOR		KITCHEN	2	T12 1x4 2-Lamp Industrial Strip Fixture	72	0.144	533	2	Retrofit with (2) 12.5 Watt LED T8 4' Lamps; Direct Wire to Socket	25	0.050	185
CLEAR CREEK STATE PARK	CABIN	12	INTERIOR		BED	1	T8 1x4 2-Lamp Vanity Fixture	62	0.062	230	1	Retrofit with (2) 12.5 Watt LED T8 4' Lamps; Direct Wire to Socket	25	0.025	93
CLEAR CREEK STATE PARK	CABIN	12	EXTERIOR		EXTERIOR	1	60 Watt Incandescent A-Lamp Fixture	60	0.060	263	1	Re-Lamp with (1) 10 Watt LED A19	10	0.010	44
CLEAR CREEK STATE PARK	COMFORT STATION	13	INTERIOR		MENS RESTROOM	1	T8 1x2 2-Lamp Vanity Fixture	36	0.036	99	1	Retrofit with (2) 10 Watt LED T8 2' Lamps; Direct Wire to Socket	20	0.020	55
CLEAR CREEK STATE PARK	COMFORT STATION	13	INTERIOR		MENS RESTROOM	1	T8 1x4 2-Lamp Vanity Fixture	62	0.062	171	1	Retrofit with (2) 12.5 Watt LED T8 4' Lamps; Direct Wire to Socket	25	0.025	69
CLEAR CREEK STATE PARK	COMFORT STATION	13	INTERIOR		WOMENS RESTROOM	1	T8 1x2 2-Lamp Vanity Fixture	36	0.036	99	1	Retrofit with (2) 10 Watt LED T8 2' Lamps; Direct Wire to Socket	20	0.020	55
CLEAR CREEK STATE PARK	COMFORT STATION	13	INTERIOR		WOMENS RESTROOM	1	T8 1x4 2-Lamp Vanity Fixture	62	0.062	171	1	Retrofit with (2) 12.5 Watt LED T8 4' Lamps; Direct Wire to Socket	25	0.025	69
CLEAR CREEK STATE PARK	COMFORT STATION	13	EXTERIOR		EXTERIOR	2	42 Watt Plug-In CFL 2-Lamp Downlight Fixture	84	0.168	736	2	Retrofit with 22 Watt LED 6" Downlight	22	0.044	193
CLEAR CREEK STATE PARK	CABIN	13	INTERIOR		CABIN	3	T8 1x4 2-Lamp Wrap Fixture	62	0.186	689	3	Retrofit with (2) 12.5 Watt LED T8 4' Lamps; Direct Wire to Socket	25	0.075	278
CLEAR CREEK STATE PARK	CABIN	13	EXTERIOR		EXTERIOR	1	60 Watt Incandescent A-Lamp Fixture	60	0.060	263	1	Re-Lamp with (1) 10 Watt LED A19	10	0.010	44
CLEAR CREEK STATE PARK	PAPER SHED		INTERIOR		SHED	2	100 Watt Incandescent A-Lamp Fixture	100	0.200	200	2	Re-Lamp with (1) 18 Watt LED A21	18	0.036	36
CLEAR CREEK STATE PARK	CABIN SHOWER HOUSE		INTERIOR		PUMP ROOM	4	100 Watt Incandescent A-Lamp Fixture	100	0.400	1,104	4	Re-Lamp with (1) 18 Watt LED A21	18	0.072	199
CLEAR CREEK STATE PARK	CABIN SHOWER HOUSE		INTERIOR		MENS RESTROOM	2	T8 1x4 2-Lamp Wrap Fixture	62	0.124	342	2	Retrofit with (2) 12.5 Watt LED T8 4' Lamps; Direct Wire to Socket	25	0.050	138
CLEAR CREEK STATE PARK	CABIN SHOWER HOUSE		INTERIOR		MENS RESTROOM	1	T8 1x4 2-Lamp Vanity Fixture	62	0.062	171	1	Retrofit with (2) 12.5 Watt LED T8 4' Lamps; Direct Wire to Socket	25	0.025	69
CLEAR CREEK STATE PARK	CABIN SHOWER HOUSE		INTERIOR		WOMENS RESTROOM	2	T8 1x4 2-Lamp Wrap Fixture	62	0.124	342	2	Retrofit with (2) 12.5 Watt LED T8 4' Lamps; Direct Wire to Socket	25	0.050	138
CLEAR CREEK STATE PARK	CABIN SHOWER HOUSE		INTERIOR		WOMENS RESTROOM	1	T8 1x4 2-Lamp Vanity Fixture	62	0.062	171	1	Retrofit with (2) 12.5 Watt LED T8 4' Lamps; Direct Wire to Socket	25	0.025	69
CLEAR CREEK STATE PARK	CABIN SHOWER HOUSE		INTERIOR		HANDICAPPED	1	T8 2x2 1-Lamp Vanity Fixture	22	0.022	61	1	Retrofit with (1) 10 Watt LED T8 2' Lamp; Direct Wire to Socket	10	0.010	28
CLEAR CREEK STATE PARK	CABIN SHOWER HOUSE		INTERIOR		HANDICAPPED	1	T8 1x4 2-Lamp Vaporlight Fixture	62	0.062	171	1	Retrofit with (2) 12.5 Watt LED T8 4' Lamps; Direct Wire to Socket	25	0.025	69
CLEAR CREEK STATE PARK	CABIN SHOWER HOUSE		EXTERIOR		EXTERIOR	1	23 Watt Compact Fluorescent Canopy Fixture	23	0.023	101	1	Re-Lamp with (1) 10 Watt LED A19	10	0.010	44
CLEAR CREEK STATE PARK	CABIN SHOWER HOUSE		EXTERIOR		EXTERIOR	1	175 Watt Metal Halide Dusk to Dawn Fixture	213	0.213	933	1	New 26 Watt LED Dusk to Dawn Barnyard Fixture	26	0.026	114
CLEAR CREEK STATE PARK	WATER TREATMENT		EXTERIOR		EXTERIOR	1	150 Watt Quartz Flood Fixture	150	0.150	657	1	New 26 Watt LED Flood Fixture	27	0.027	118
CLEAR CREEK STATE PARK	LC SHOWER HOUSE		INTERIOR		MENS RESTROOM	3	T8 1x4 2-Lamp Wrap Fixture	62	0.186	513	3	Retrofit with (2) 12.5 Watt LED T8 4' Lamps; Direct Wire to Socket	25	0.075	207
CLEAR CREEK STATE PARK	LC SHOWER HOUSE		INTERIOR		MENS RESTROOM	1	T8 1x4 2-Lamp Vanity Fixture	62	0.062	171	1	Retrofit with (2) 12.5 Watt LED T8 4' Lamps; Direct Wire to Socket	25	0.025	69
CLEAR CREEK STATE PARK	LC SHOWER HOUSE		INTERIOR		WOMENS RESTROOM	3	T8 1x4 2-Lamp Wrap Fixture	62	0.186	513	3	Retrofit with (2) 12.5 Watt LED T8 4' Lamps; Direct Wire to Socket	25	0.075	207
CLEAR CREEK STATE PARK	LC SHOWER HOUSE		INTERIOR		WOMENS RESTROOM	1	T8 1x4 2-Lamp Vanity Fixture	62	0.062	171	1	Retrofit with (2) 12.5 Watt LED T8 4' Lamps; Direct Wire to Socket	25	0.025	69

©2013 Energy Systems Group, LLC

EXISTING FIXTURES											PROPOSED FIXTURE UPGRADE				
Park/Building Name	Building	Building #	Phase	Floor	Room Description	Qty	Description	Watts	kW	kWh	Qty	Description	Watts	kW	kWh
CLEAR CREEK STATE PARK	LC SHOWER HOUSE		INTERIOR		RESTROOM	1	T8 1x4 2-Lamp Vaportight Fixture	62	0.062	171	1	Retrofit with (2) 12.5 Watt LED T8 4' Lamps; Direct Wire to Socket	25	0.025	69
CLEAR CREEK STATE PARK	LC SHOWER HOUSE		INTERIOR		RESTROOM	1	60 Watt Incandescent A-Lamp Fixture	60	0.060	166	1	Re-Lamp with (1) 10 Watt LED A 19	10	0.010	28
CLEAR CREEK STATE PARK	LC SHOWER HOUSE		EXTERIOR		EXTERIOR	1	100 Watt Incandescent A-Lamp Fixture	100	0.100	438	1	Re-Lamp with (1) 18 Watt LED A21	18	0.018	79
CLEAR CREEK STATE PARK	LC SHOWER HOUSE		INTERIOR		EXTERIOR STORAGE	3	100 Watt Incandescent A-Lamp Fixture	100	0.300	780	3	Re-Lamp with (1) 18 Watt LED A21	18	0.054	140
CLEAR CREEK STATE PARK	WELLHOUSE		INTERIOR		WELLHOUSE	4	T8 1x4 2-Lamp Wrap Fixture	62	0.248	645	4	Retrofit with (2) 12.5 Watt LED T8 4' Lamps; Direct Wire to Socket	25	0.100	260
CLEAR CREEK STATE PARK	WELLHOUSE		INTERIOR		WELLHOUSE	1	60 Watt Incandescent A-Lamp Fixture	60	0.060	156	1	Re-Lamp with (1) 10 Watt LED A 19	10	0.010	26
CLEAR CREEK STATE PARK	WELLHOUSE		EXTERIOR		EXTERIOR	2	100 Watt High Pressure Sodium Wall Pack Fixture	125	0.250	1,095	2	New 24 Watt LED Wall Pack Fixture; Non-Dark Sky	25	0.050	219
CLEAR CREEK STATE PARK	WELLHOUSE		EXTERIOR		EXTERIOR	1	100 Watt Incandescent A-Lamp Fixture	100	0.100	438	1	Re-Lamp with (1) 18 Watt LED A21	18	0.018	79
CLEAR CREEK STATE PARK	CABIN	8	INTERIOR		CABIN	1	T12 1x4 2-Lamp Industrial Strip Fixture	72	0.072	267	1	Retrofit with (2) 12.5 Watt LED T8 4' Lamps; Direct Wire to Socket	25	0.025	93
CLEAR CREEK STATE PARK	CABIN	8	INTERIOR		CABIN	1	T12 1x4 2-Lamp Vaportight Fixture	72	0.072	267	1	Retrofit with (2) 12.5 Watt LED T8 4' Lamps; Direct Wire to Socket	25	0.025	93
CLEAR CREEK STATE PARK	CABIN	8	EXTERIOR		EXTERIOR	1	60 Watt Incandescent A-Lamp Fixture	60	0.060	263	1	Re-Lamp with (1) 10 Watt LED A 19	10	0.010	44
CLEAR CREEK STATE PARK	CAMPGROUND SHOWER HOUSE		INTERIOR		MENS RESTROOM	6	T8 1x4 2-Lamp Vanity Fixture	62	0.372	1,027	6	Retrofit with (2) 12.5 Watt LED T8 4' Lamps; Direct Wire to Socket	25	0.150	414
CLEAR CREEK STATE PARK	CAMPGROUND SHOWER HOUSE		INTERIOR		MENS RESTROOM	2	60 Watt Incandescent A-Lamp Fixture	60	0.120	331	2	Re-Lamp with (1) 10 Watt LED A 19	10	0.020	55
CLEAR CREEK STATE PARK	CAMPGROUND SHOWER HOUSE		INTERIOR		MENS RESTROOM	2	26 Watt Plug-In CFL Downlight Fixture	26	0.052	144	2	No Retrofit	26	0.052	144
CLEAR CREEK STATE PARK	CAMPGROUND SHOWER HOUSE		INTERIOR		MENS RESTROOM	1	3 Watt LED 2-Lamp Exit Sign	3	0.003	26	1	No Retrofit	3	0.003	26
CLEAR CREEK STATE PARK	CAMPGROUND SHOWER HOUSE		INTERIOR		WOMENS RESTROOM	6	T8 1x4 2-Lamp Vanity Fixture	62	0.372	1,027	6	Retrofit with (2) 12.5 Watt LED T8 4' Lamps; Direct Wire to Socket	25	0.150	414
CLEAR CREEK STATE PARK	CAMPGROUND SHOWER HOUSE		INTERIOR		WOMENS RESTROOM	2	60 Watt Incandescent A-Lamp Fixture	60	0.120	331	2	Re-Lamp with (1) 10 Watt LED A 19	10	0.020	55
CLEAR CREEK STATE PARK	CAMPGROUND SHOWER HOUSE		INTERIOR		WOMENS RESTROOM	2	26 Watt Plug-In CFL Downlight Fixture	26	0.052	144	2	No Retrofit	26	0.052	144
CLEAR CREEK STATE PARK	CAMPGROUND SHOWER HOUSE		INTERIOR		WOMENS RESTROOM	1	3 Watt LED 2-Lamp Exit Sign	3	0.003	26	1	No Retrofit	3	0.003	26
CLEAR CREEK STATE PARK	CAMPGROUND SHOWER HOUSE		INTERIOR		RESTROOM	2	T8 1x4 2-Lamp Vanity Fixture	62	0.124	342	2	Retrofit with (2) 12.5 Watt LED T8 4' Lamps; Direct Wire to Socket	25	0.050	138
CLEAR CREEK STATE PARK	CAMPGROUND SHOWER HOUSE		INTERIOR		RESTROOM	1	60 Watt Incandescent A-Lamp Fixture	60	0.060	166	1	Re-Lamp with (1) 10 Watt LED A 19	10	0.010	28
CLEAR CREEK STATE PARK	CAMPGROUND SHOWER HOUSE		EXTERIOR		EXTERIOR	2	175 Watt Metal Halide Low Bay Fixture	215	0.430	1,883	2	New 40 Watt LED Canopy Fixture	38	0.076	333
CLEAR CREEK STATE PARK	CAMPGROUND SHOWER HOUSE		EXTERIOR		EXTERIOR	6	100 Watt High Pressure Sodium Wall Pack Fixture	125	0.750	3,285	6	New 24 Watt LED Wall Pack Fixture; Non-Dark Sky	25	0.150	657
CLEAR CREEK STATE PARK	CAMPGROUND SHOWER HOUSE		INTERIOR		EXTERIOR MECHANICAL	4	T8 1x4 2-Lamp Wrap Fixture	62	0.248	248	4	Retrofit with (2) 12.5 Watt LED T8 4' Lamps; Direct Wire to Socket	25	0.100	100
CLEAR CREEK STATE PARK	CAMPGROUND SHOWER HOUSE		INTERIOR		EXTERIOR MECHANICAL	1	60 Watt Incandescent A-Lamp Fixture	60	0.060	60	1	Re-Lamp with (1) 10 Watt LED A 19	10	0.010	10
CLEAR CREEK STATE PARK	RESERVOIR NATURE CENTER		INTERIOR		MUSEUM	9	Existing LED Fixture; No Retrofit	15	0.135	303	9	No Retrofit	15	0.135	303

©2013 Energy Systems Group, LLC

EXISTING FIXTURES											PROPOSED FIXTURE UPGRADE				
Park/Building Name	Building	Building #	Phase	Floor	Room Description	Qty	Description	Watts	kW	kWh	Qty	Description	Watts	kW	kWh
CLEAR CREEK STATE PARK	RESERVOIR NATURE CENTER		INTERIOR		MUSEUM	3	T12 1x4 1-Lamp Vanity Fixture	43	0.129	290	3	Retrofit with (1) 12.5 Watt LED T8 4' Lamps; Direct Wire to Socket	12.5	0.038	84
CLEAR CREEK STATE PARK	RESERVOIR NATURE CENTER		INTERIOR		MUSEUM	1	Existing LED Fixture; No Retrofit	30	0.030	67	1	No Retrofit	30	0.030	67
CLEAR CREEK STATE PARK	RESERVOIR NATURE CENTER		INTERIOR		MUSEUM	1	T12 1x4 2-Lamp Vaportight Fixture	72	0.072	162	1	Retrofit with (2) 12.5 Watt LED T8 4' Lamps; Direct Wire to Socket	25	0.025	56
CLEAR CREEK STATE PARK	RESERVOIR NATURE CENTER		INTERIOR		STORAGE	2	T12 1x4 2-Lamp Wrap Fixture	72	0.144	144	2	Retrofit with (2) 12.5 Watt LED T8 4' Lamps; Direct Wire to Socket	25	0.050	50
CLEAR CREEK STATE PARK	RESERVOIR NATURE CENTER		INTERIOR		STORAGE	2	T12 1x4 2-Lamp Industrial Strip Fixture	72	0.144	144	2	Retrofit with (2) 12.5 Watt LED T8 4' Lamps; Direct Wire to Socket	25	0.050	50
CLEAR CREEK STATE PARK	RESERVOIR NATURE CENTER		EXTERIOR		EXTERIOR	4	60 Watt Incandescent A-Lamp Fixture	60	0.240	1,051	4	Re-Lamp with (1) 10 Watt LED A19	10	0.040	175
CLEAR CREEK STATE PARK	RESERVOIR NATURE CENTER		EXTERIOR		EXTERIOR	1	75 Watt Incandescent PAR38	75	0.075	329	1	Re-Lamp with (1) 17 Watt LED PAR38	17	0.017	74
CLEAR CREEK STATE PARK	RESERVOIR NATURE CENTER		EXTERIOR		EXTERIOR	1	175 Watt Metal Halide Dusk to Dawn Fixture	213	0.213	933	1	New 26 Watt LED Dusk to Dawn Barnyard Fixture	26	0.026	114
CLEAR CREEK STATE PARK	RESERVOIR NATURE CENTER		INTERIOR		OUTSIDE STORAGE	1	60 Watt Incandescent A-Lamp Fixture	60	0.060	60	1	Re-Lamp with (1) 10 Watt LED A19	10	0.010	10
CLEAR CREEK STATE PARK	TOILET FOSIT BEACH		INTERIOR		WOMENS RESTROOM	2	T8 1x4 2-Lamp Wrap Fixture	62	0.124	342	2	Retrofit with (2) 12.5 Watt LED T8 4' Lamps; Direct Wire to Socket	25	0.050	138
CLEAR CREEK STATE PARK	TOILET FOSIT BEACH		INTERIOR		MENS RESTROOM	2	T12 1x4 2-Lamp Wrap Fixture	72	0.144	397	2	Retrofit with (2) 12.5 Watt LED T8 4' Lamps; Direct Wire to Socket	25	0.050	138
CLEAR CREEK STATE PARK	CABIN	1	INTERIOR		KITCHEN	1	T8 1x4 2-Lamp Vaportight Fixture	62	0.062	230	1	Retrofit with (2) 12.5 Watt LED T8 4' Lamps; Direct Wire to Socket	25	0.025	93
CLEAR CREEK STATE PARK	CABIN	1	INTERIOR		BED	1	T8 1x4 2-Lamp Vaportight Fixture	62	0.062	230	1	Retrofit with (2) 12.5 Watt LED T8 4' Lamps; Direct Wire to Socket	25	0.025	93
CLEAR CREEK STATE PARK	CABIN	1	EXTERIOR		EXTERIOR FRONT	1	60 Watt Incandescent Canopy Fixture	60	0.060	263	1	New 10 Watt LED Canopy Fixture	12	0.012	53
CLEAR CREEK STATE PARK	CABIN	1	EXTERIOR		EXTERIOR BACK	1	60 Watt Incandescent Canopy Fixture	60	0.060	263	1	New 10 Watt LED Canopy Fixture	12	0.012	53
CLEAR CREEK STATE PARK	CABIN	2	INTERIOR		KITCHEN	1	T8 1x4 2-Lamp Vaportight Fixture	62	0.062	230	1	Retrofit with (2) 12.5 Watt LED T8 4' Lamps; Direct Wire to Socket	25	0.025	93
CLEAR CREEK STATE PARK	CABIN	2	INTERIOR		BED	1	T8 1x4 2-Lamp Vaportight Fixture	62	0.062	230	1	Retrofit with (2) 12.5 Watt LED T8 4' Lamps; Direct Wire to Socket	25	0.025	93
CLEAR CREEK STATE PARK	CABIN	2	EXTERIOR		EXTERIOR	2	60 Watt Incandescent Canopy Fixture	60	0.120	526	2	New 10 Watt LED Canopy Fixture	12	0.024	105
CLEAR CREEK STATE PARK	CABIN	3	INTERIOR		KITCHEN	1	T8 1x4 2-Lamp Vaportight Fixture	62	0.062	230	1	Retrofit with (2) 12.5 Watt LED T8 4' Lamps; Direct Wire to Socket	25	0.025	93
CLEAR CREEK STATE PARK	CABIN	3	INTERIOR		BED	1	T8 1x4 2-Lamp Vaportight Fixture	62	0.062	230	1	Retrofit with (2) 12.5 Watt LED T8 4' Lamps; Direct Wire to Socket	25	0.025	93
CLEAR CREEK STATE PARK	CABIN	3	EXTERIOR		EXTERIOR	2	60 Watt Incandescent Canopy Fixture	60	0.120	526	2	New 10 Watt LED Canopy Fixture	12	0.024	105
CLEAR CREEK STATE PARK	CABIN	4	INTERIOR		KITCHEN	1	T8 1x4 2-Lamp Vaportight Fixture	62	0.062	230	1	Retrofit with (2) 12.5 Watt LED T8 4' Lamps; Direct Wire to Socket	25	0.025	93
CLEAR CREEK STATE PARK	CABIN	4	INTERIOR		BED	1	T8 1x4 2-Lamp Vaportight Fixture	62	0.062	230	1	Retrofit with (2) 12.5 Watt LED T8 4' Lamps; Direct Wire to Socket	25	0.025	93
CLEAR CREEK STATE PARK	CABIN	4	EXTERIOR		EXTERIOR	2	60 Watt Incandescent Canopy Fixture	60	0.120	526	2	New 10 Watt LED Canopy Fixture	12	0.024	105
CLEAR CREEK STATE PARK	CABIN	5	INTERIOR		KITCHEN	1	T8 1x4 2-Lamp Vaportight Fixture	62	0.062	230	1	Retrofit with (2) 12.5 Watt LED T8 4' Lamps; Direct Wire to Socket	25	0.025	93
CLEAR CREEK STATE PARK	CABIN	5	INTERIOR		BED	1	T8 1x4 2-Lamp Vaportight Fixture	62	0.062	230	1	Retrofit with (2) 12.5 Watt LED T8 4' Lamps; Direct Wire to Socket	25	0.025	93

©2013 Energy Systems Group, LLC

EXISTING FIXTURES												PROPOSED FIXTURE UPGRADE				
Park/Building Name	Building	Building #	Phase	Floor	Room Description	Qty	Description	Watts	kW	kWh	Qty	Description	Watts	kW	kWh
CLEAR CREEK STATE PARK	CABIN	5	EXTERIOR		EXTERIOR	2	60 Watt Incandescent Canopy Fixture	60	0.120	526	2	New 10 Watt LED Canopy Fixture	12	0.024	105
CLEAR CREEK STATE PARK	CABIN	6	INTERIOR		KITCHEN	1	T8 1x4 2-Lamp Vaportight Fixture	62	0.062	230	1	Retrofit with (2) 12.5 Watt LED T8 4' Lamps; Direct Wire to Socket	25	0.025	93
CLEAR CREEK STATE PARK	CABIN	6	INTERIOR		BED	1	T8 1x4 2-Lamp Vaportight Fixture	62	0.062	230	1	Retrofit with (2) 12.5 Watt LED T8 4' Lamps; Direct Wire to Socket	25	0.025	93
CLEAR CREEK STATE PARK	CABIN	6	EXTERIOR		EXTERIOR	2	60 Watt Incandescent Canopy Fixture	60	0.120	526	2	New 10 Watt LED Canopy Fixture	12	0.024	105
CLEAR CREEK STATE PARK	CABIN	7	INTERIOR		KITCHEN	1	T8 1x4 2-Lamp Vaportight Fixture	62	0.062	230	1	Retrofit with (2) 12.5 Watt LED T8 4' Lamps; Direct Wire to Socket	25	0.025	93
CLEAR CREEK STATE PARK	CABIN	7	INTERIOR		BED	1	T8 1x4 2-Lamp Vaportight Fixture	62	0.062	230	1	Retrofit with (2) 12.5 Watt LED T8 4' Lamps; Direct Wire to Socket	25	0.025	93
CLEAR CREEK STATE PARK	CABIN	7	EXTERIOR		EXTERIOR	2	60 Watt Incandescent Canopy Fixture	60	0.120	526	2	New 10 Watt LED Canopy Fixture	12	0.024	105
CLEAR CREEK STATE PARK	CABIN	8	INTERIOR		KITCHEN	1	T8 1x4 2-Lamp Vaportight Fixture	62	0.062	230	1	Retrofit with (2) 12.5 Watt LED T8 4' Lamps; Direct Wire to Socket	25	0.025	93
CLEAR CREEK STATE PARK	CABIN	8	INTERIOR		BED	1	T8 1x4 2-Lamp Vaportight Fixture	62	0.062	230	1	Retrofit with (2) 12.5 Watt LED T8 4' Lamps; Direct Wire to Socket	25	0.025	93
CLEAR CREEK STATE PARK	CABIN	8	EXTERIOR		EXTERIOR	2	60 Watt Incandescent Canopy Fixture	60	0.120	526	2	New 10 Watt LED Canopy Fixture	12	0.024	105
CLEAR CREEK STATE PARK	CABIN	9	INTERIOR		KITCHEN	1	T8 1x4 2-Lamp Vaportight Fixture	62	0.062	230	1	Retrofit with (2) 12.5 Watt LED T8 4' Lamps; Direct Wire to Socket	25	0.025	93
CLEAR CREEK STATE PARK	CABIN	9	INTERIOR		BED	1	T8 1x4 2-Lamp Vaportight Fixture	62	0.062	230	1	Retrofit with (2) 12.5 Watt LED T8 4' Lamps; Direct Wire to Socket	25	0.025	93
CLEAR CREEK STATE PARK	CABIN	9	EXTERIOR		EXTERIOR	2	60 Watt Incandescent Canopy Fixture	60	0.120	526	2	New 10 Watt LED Canopy Fixture	12	0.024	105
CLEAR CREEK STATE PARK	COMFORT STATION MAIN CAMP PIT TOILET		INTERIOR		MENS RESTROOM	1	T12 1x4 2-Lamp Vaportight Fixture	72	0.072	330	1	Retrofit with (2) 12.5 Watt LED T8 4' Lamps; Direct Wire to Socket	25	0.025	115
CLEAR CREEK STATE PARK	COMFORT STATION MAIN CAMP PIT TOILET		INTERIOR		WOMENS RESTROOM	1	T12 1x4 2-Lamp Vaportight Fixture	72	0.072	330	1	Retrofit with (2) 12.5 Watt LED T8 4' Lamps; Direct Wire to Socket	25	0.025	115
CLEAR CREEK STATE PARK	COMFORT STATION MAIN CAMP PIT TOILET		EXTERIOR		EXTERIOR	1	35 Watt High Pressure Sodium Wall Pack Fixture	50	0.050	219	1	New 12 Watt LED Wall Pack Fixture	14	0.014	61
CLEAR CREEK STATE PARK	COMFORT STATION PAVILION 3		INTERIOR		NO LIGHTS	1	No Lights; Area(s) Not Included in Scope/Pricing	0	0.000	0	1	No Retrofit	0	0.000	0
CLEAR CREEK STATE PARK	CABIN	15	INTERIOR		INTERIOR	4	T8 1x4 2-Lamp Strip Fixture	62	0.248	919	4	Retrofit with (2) 12.5 Watt LED T8 4' Lamps; Direct Wire to Socket	25	0.100	370
CLEAR CREEK STATE PARK	CABIN	15	EXTERIOR		EXTERIOR	1	60 Watt Incandescent A-Lamp Fixture	60	0.060	263	1	Re-Lamp with (1) 10 Watt LED A19	10	0.010	44
CLEAR CREEK STATE PARK	CABIN	18	INTERIOR		INTERIOR	4	T8 1x4 2-Lamp Strip Fixture	62	0.248	919	4	Retrofit with (2) 12.5 Watt LED T8 4' Lamps; Direct Wire to Socket	25	0.100	370
CLEAR CREEK STATE PARK	CABIN	18	EXTERIOR		EXTERIOR	1	60 Watt Incandescent A-Lamp Fixture	60	0.060	263	1	Re-Lamp with (1) 10 Watt LED A19	10	0.010	44
CLEAR CREEK STATE PARK	CABIN	20	INTERIOR		INTERIOR	4	T8 1x4 2-Lamp Strip Fixture	62	0.248	919	4	Retrofit with (2) 12.5 Watt LED T8 4' Lamps; Direct Wire to Socket	25	0.100	370
CLEAR CREEK STATE PARK	CABIN	20	EXTERIOR		EXTERIOR	1	60 Watt Incandescent A-Lamp Fixture	60	0.060	263	1	Re-Lamp with (1) 10 Watt LED A19	10	0.010	44
CLEAR CREEK STATE PARK	CABIN	16	INTERIOR		INTERIOR	4	T8 1x4 2-Lamp Strip Fixture	62	0.248	919	4	Retrofit with (2) 12.5 Watt LED T8 4' Lamps; Direct Wire to Socket	25	0.100	370
CLEAR CREEK STATE PARK	CABIN	16	EXTERIOR		EXTERIOR	1	60 Watt Incandescent A-Lamp Fixture	60	0.060	263	1	Re-Lamp with (1) 10 Watt LED A19	10	0.010	44
CLEAR CREEK STATE PARK	WATER TREATMENT		INTERIOR		NO LIGHTS	1	No Lights; Area(s) Not Included in Scope/Pricing	0	0.000	0	1	No Retrofit	0	0.000	0

©2013 Energy Systems Group, LLC

EXISTING FIXTURES											PROPOSED FIXTURE UPGRADE				
Park/Building Name	Building	Building #	Phase	Floor	Room Description	Qty	Description	Watts	kW	kWh	Qty	Description	Watts	kW	kWh
CLEAR CREEK STATE PARK	PAVILION 5 PIT TOILET		INTERIOR		NO LIGHTS	1	No Lights; Area(s) Not Included in Scope/Pricing	0	0.000	0	1	No Retrofit	0	0.000	0
CLEAR CREEK STATE PARK	SHELTER	4	INTERIOR		NO LIGHTS	1	No Lights; Area(s) Not Included in Scope/Pricing	0	0.000	0	1	No Retrofit	0	0.000	0
CLEAR CREEK STATE PARK	PAVILION 5 SPRING HOUSE		INTERIOR		NO LIGHTS	1	No Lights; Area(s) Not Included in Scope/Pricing	0	0.000	0	1	No Retrofit	0	0.000	0
CLEAR CREEK STATE PARK	COMFORT STATION PAVILION 4		INTERIOR		NO LIGHTS	1	No Lights; Area(s) Not Included in Scope/Pricing	0	0.000	0	1	No Retrofit	0	0.000	0
CLEAR CREEK STATE PARK	RACOON LOOP PIT TOILET		INTERIOR		NO LIGHTS	1	No Lights; Area(s) Not Included in Scope/Pricing	0	0.000	0	1	No Retrofit	0	0.000	0
CLEAR CREEK STATE PARK	PAVILION 3		INTERIOR		NO LIGHTS	1	No Lights; Area(s) Not Included in Scope/Pricing	0	0.000	0	1	No Retrofit	0	0.000	0
CLEAR CREEK STATE PARK	SHELTER 3		INTERIOR		NO LIGHTS	1	No Lights; Area(s) Not Included in Scope/Pricing	0	0.000	0	1	No Retrofit	0	0.000	0
CLEAR CREEK STATE PARK	FIREWOOD CONCESSION		INTERIOR		NO LIGHTS	1	No Lights; Area(s) Not Included in Scope/Pricing	0	0.000	0	1	No Retrofit	0	0.000	0
CLEAR CREEK STATE PARK	CABIN	21	INTERIOR		CABIN	3	T8 1x4 2-Lamp Vaportight Fixture	62	0.186	689	3	Retrofit with (2) 12.5 Watt LED T8 4' Lamps; Direct Wire to Socket	25	0.075	278
CLEAR CREEK STATE PARK	CABIN	21	EXTERIOR		EXTERIOR	2	75 Watt Incandescent A-Lamp Fixture	75	0.150	657	2	Re-Lamp with (1) 10 Watt LED A19	10	0.020	88
CLEAR CREEK STATE PARK	CABIN	17	INTERIOR		CABIN	1	No Access; Area(s) Not Included in Scope/Pricing	0	0.000	0	1	No Retrofit	0	0.000	0
CLEAR CREEK STATE PARK	CABIN	19	INTERIOR		CABIN	3	T8 1x4 2-Lamp Vaportight Fixture	62	0.186	689	3	Retrofit with (2) 12.5 Watt LED T8 4' Lamps; Direct Wire to Socket	25	0.075	278
CLEAR CREEK STATE PARK	CABIN	19	EXTERIOR		EXTERIOR	1	60 Watt Incandescent A-Lamp Fixture	60	0.060	263	1	Re-Lamp with (1) 10 Watt LED A19	10	0.010	44
CLEAR CREEK STATE PARK	CABIN	14	INTERIOR		CABIN	3	T8 1x4 2-Lamp Vaportight Fixture	62	0.186	689	3	Retrofit with (2) 12.5 Watt LED T8 4' Lamps; Direct Wire to Socket	25	0.075	278
CLEAR CREEK STATE PARK	CABIN	14	EXTERIOR		EXTERIOR	1	60 Watt Incandescent A-Lamp Fixture	60	0.060	263	1	Re-Lamp with (1) 10 Watt LED A19	10	0.010	44
CLEAR CREEK STATE PARK	CABIN COMFORT STATION	17	INTERIOR		RESTROOM	2	T8 1x4 2-Lamp Vanity Fixture	62	0.124	342	2	Retrofit with (2) 12.5 Watt LED T8 4' Lamps; Direct Wire to Socket	25	0.050	138
CLEAR CREEK STATE PARK	CABIN COMFORT STATION	17	INTERIOR		RESTROOM	1	60 Watt Incandescent A-Lamp Fixture	60	0.060	166	1	Re-Lamp with (1) 10 Watt LED A19	10	0.010	28
CLEAR CREEK STATE PARK	CABIN COMFORT STATION	17	INTERIOR		RESTROOM	2	T8 1x4 2-Lamp Vanity Fixture	62	0.124	342	2	Retrofit with (2) 12.5 Watt LED T8 4' Lamps; Direct Wire to Socket	25	0.050	138
CLEAR CREEK STATE PARK	CABIN COMFORT STATION	17	INTERIOR		RESTROOM	1	60 Watt Incandescent A-Lamp Fixture	60	0.060	166	1	Re-Lamp with (1) 10 Watt LED A19	10	0.010	28
CLEAR CREEK STATE PARK	CABIN COMFORT STATION	17	INTERIOR		STORAGE	1	T8 1x4 2-Lamp Vanity Fixture	62	0.062	171	1	Retrofit with (2) 12.5 Watt LED T8 4' Lamps; Direct Wire to Socket	25	0.025	69
CLEAR CREEK STATE PARK	CABIN COMFORT STATION	17	INTERIOR		STORAGE	1	T8 1x4 2-Lamp Wrap Fixture	62	0.062	171	1	Retrofit with (2) 12.5 Watt LED T8 4' Lamps; Direct Wire to Socket	25	0.025	69
CLEAR CREEK STATE PARK	CABIN COMFORT STATION	17	EXTERIOR		EXTERIOR	4	100 Watt High Pressure Sodium Wall Pack Fixture	125	0.500	2,190	4	New 24 Watt LED Wall Pack Fixture; Non-Dark Sky	25	0.100	438
CLEAR CREEK STATE PARK	CABIN COMFORT STATION	17	EXTERIOR		EXTERIOR	2	175 Watt Metal Halide Low Bay Fixture	215	0.430	1,883	2	New 40 Watt LED Canopy Fixture	38	0.076	333
CLEAR CREEK STATE PARK	LARGE BUILDING		INTERIOR		STORAGE	6	60 Watt Incandescent A-Lamp Fixture	60	0.360	936	6	Re-Lamp with (1) 10 Watt LED A19	10	0.060	156
CLEAR CREEK STATE PARK	SHELTER	2	INTERIOR		PAVILION	1	150 Watt Quartz 2-Head Flood Fixture	300	0.300	1,111	1	(2) New 26 Watt LED Flood Fixtures	52	0.052	193
CLEAR CREEK STATE PARK	SHELTER	1	INTERIOR		PAVILION	1	150 Watt Quartz 2-Head Flood Fixture	300	0.300	1,111	1	(2) New 26 Watt LED Flood Fixtures	52	0.052	193

©2013 Energy Systems Group, LLC

EXISTING FIXTURES											PROPOSED FIXTURE UPGRADE				
Park/Building Name	Building	Building #	Phase	Floor	Room Description	Qty	Description	Watts	kW	kWh	Qty	Description	Watts	kW	kWh
COOK FOREST STATE PARK	IC2		INTERIOR		INTERIOR	3	23 Watt Compact Fluorescent Fixture	23	0.069	256	3	Re-Lamp with (1) 10 Watt LED A19	10	0.030	111
COOK FOREST STATE PARK	IC2		EXTERIOR		EXTERIOR	1	60 Watt Incandescent A-Lamp Fixture	60	0.060	263	1	Re-Lamp with (1) 10 Watt LED A19	10	0.010	44
COOK FOREST STATE PARK	IC3		INTERIOR		INTERIOR	3	13 Watt Compact Fluorescent Fixture	13	0.039	144	3	Re-Lamp with (1) 10 Watt LED A19	10	0.030	111
COOK FOREST STATE PARK	IC3		EXTERIOR		EXTERIOR	1	60 Watt Incandescent A-Lamp Fixture	60	0.060	263	1	Re-Lamp with (1) 10 Watt LED A19	10	0.010	44
COOK FOREST STATE PARK	IC4		INTERIOR		INTERIOR	3	52 Watt Incandescent A-Lamp	52	0.156	578	3	Re-Lamp with (1) 10 Watt LED A19	10	0.030	111
COOK FOREST STATE PARK	IC4		EXTERIOR		EXTERIOR	1	60 Watt Incandescent A-Lamp Fixture	60	0.060	263	1	Re-Lamp with (1) 10 Watt LED A19	10	0.010	44
COOK FOREST STATE PARK	IC5		INTERIOR		INTERIOR	1	13 Watt Compact Fluorescent 5-Lamp Fixture	65	0.065	241	1	Re-Lamp with (5) 10 Watt LED A19	50	0.050	185
COOK FOREST STATE PARK	IC5		INTERIOR		INTERIOR	1	13 Watt Compact Fluorescent Fixture	13	0.013	48	1	Re-Lamp with (1) 10 Watt LED A19	10	0.010	37
COOK FOREST STATE PARK	IC5		EXTERIOR		EXTERIOR	1	60 Watt Incandescent A-Lamp Fixture	60	0.060	263	1	Re-Lamp with (1) 10 Watt LED A19	10	0.010	44
COOK FOREST STATE PARK	IC6		INTERIOR		INTERIOR	1	13 Watt Compact Fluorescent 5-Lamp Fixture	65	0.065	241	1	Re-Lamp with (5) 10 Watt LED A19	50	0.050	185
COOK FOREST STATE PARK	IC6		INTERIOR		INTERIOR	1	13 Watt Compact Fluorescent Fixture	13	0.013	48	1	Re-Lamp with (1) 10 Watt LED A19	10	0.010	37
COOK FOREST STATE PARK	IC6		EXTERIOR		EXTERIOR	1	60 Watt Incandescent A-Lamp Fixture	60	0.060	263	1	Re-Lamp with (1) 10 Watt LED A19	10	0.010	44
COOK FOREST STATE PARK	IC7		INTERIOR		INTERIOR	1	52 Watt Incandescent 5-Lamp A-Lamp	260	0.260	963	1	Re-Lamp with (5) 10 Watt LED A19	50	0.050	185
COOK FOREST STATE PARK	IC7		INTERIOR		INTERIOR	1	52 Watt Incandescent A-Lamp	52	0.052	193	1	Re-Lamp with (1) 10 Watt LED A19	10	0.010	37
COOK FOREST STATE PARK	IC7		EXTERIOR		EXTERIOR	1	60 Watt Incandescent A-Lamp Fixture	60	0.060	263	1	Re-Lamp with (1) 10 Watt LED A19	10	0.010	44
COOK FOREST STATE PARK	IC8		INTERIOR		INTERIOR	1	13 Watt Compact Fluorescent 5-Lamp Fixture	65	0.065	241	1	Re-Lamp with (5) 10 Watt LED A19	50	0.050	185
COOK FOREST STATE PARK	IC8		INTERIOR		INTERIOR	1	13 Watt Compact Fluorescent Fixture	13	0.013	48	1	Re-Lamp with (1) 10 Watt LED A19	10	0.010	37
COOK FOREST STATE PARK	IC8		EXTERIOR		EXTERIOR	1	60 Watt Incandescent A-Lamp Fixture	60	0.060	263	1	Re-Lamp with (1) 10 Watt LED A19	10	0.010	44
COOK FOREST STATE PARK	CABIN	10	INTERIOR		INTERIOR	1	13 Watt Compact Fluorescent 5-Lamp Fixture	65	0.065	241	1	Re-Lamp with (5) 10 Watt LED A19	50	0.050	185
COOK FOREST STATE PARK	CABIN	10	INTERIOR		INTERIOR	1	13 Watt Compact Fluorescent Fixture	13	0.013	48	1	Re-Lamp with (1) 10 Watt LED A19	10	0.010	37
COOK FOREST STATE PARK	CABIN	10	EXTERIOR		EXTERIOR	1	60 Watt Incandescent A-Lamp Fixture	60	0.060	263	1	Re-Lamp with (1) 10 Watt LED A19	10	0.010	44
COOK FOREST STATE PARK	IC11		INTERIOR		INTERIOR	1	13 Watt Compact Fluorescent 5-Lamp Fixture	65	0.065	241	1	Re-Lamp with (5) 10 Watt LED A19	50	0.050	185
COOK FOREST STATE PARK	IC11		INTERIOR		INTERIOR	1	13 Watt Compact Fluorescent Fixture	13	0.013	48	1	Re-Lamp with (1) 10 Watt LED A19	10	0.010	37
COOK FOREST STATE PARK	IC11		EXTERIOR		EXTERIOR	1	60 Watt Incandescent A-Lamp Fixture	60	0.060	263	1	Re-Lamp with (1) 10 Watt LED A19	10	0.010	44
COOK FOREST STATE PARK	RC5		INTERIOR		LIVING/KITCHEN	2	13 Watt Compact Fluorescent 3-Lamp Fixture	39	0.078	289	2	Re-Lamp with (3) 10 Watt LED A19	30	0.060	222
COOK FOREST STATE PARK	RC5		INTERIOR		LIVING/KITCHEN	1	13 Watt Compact Fluorescent 2-Lamp Fixture	26	0.026	96	1	Re-Lamp with (2) 10 Watt LED A19	20	0.020	74

©2013 Energy Systems Group, LLC

EXISTING FIXTURES											PROPOSED FIXTURE UPGRADE				
Park/Building Name	Building	Building #	Phase	Floor	Room Description	Qty	Description	Watts	kW	kWh	Qty	Description	Watts	kW	kWh
COOK FOREST STATE PARK	RC5		INTERIOR		BEDROOM	1	13 Watt Compact Fluorescent 2-Lamp Fixture	26	0.026	96	1	Re-Lamp with (2) 10 Watt LED A19	20	0.020	74
COOK FOREST STATE PARK	RC5		INTERIOR		BEDROOM	1	13 Watt Compact Fluorescent 2-Lamp Fixture	26	0.026	96	1	Re-Lamp with (2) 10 Watt LED A19	20	0.020	74
COOK FOREST STATE PARK	RC5		INTERIOR		ATTIC	3	13 Watt Compact Fluorescent Fixture	13	0.039	144	3	Re-Lamp with (1) 10 Watt LED A19	10	0.030	111
COOK FOREST STATE PARK	RC5		EXTERIOR		EXTERIOR	1	60 Watt Incandescent A-Lamp Fixture	60	0.060	263	1	Re-Lamp with (1) 10 Watt LED A19	10	0.010	44
COOK FOREST STATE PARK	RC6		INTERIOR		LIVING	2	T8 1x4 2-Lamp Wrap Fixture	62	0.124	459	2	Retrofit with (2) 12.5 Watt LED T8 4' Lamps; Direct Wire to Socket	25	0.050	185
COOK FOREST STATE PARK	RC6		INTERIOR		BED	1	60 Watt Incandescent A-Lamp Fixture	60	0.060	222	1	Re-Lamp with (1) 10 Watt LED A19	10	0.010	37
COOK FOREST STATE PARK	RC6		INTERIOR		BED	1	60 Watt Incandescent A-Lamp Fixture	60	0.060	222	1	Re-Lamp with (1) 10 Watt LED A19	10	0.010	37
COOK FOREST STATE PARK	RC6		INTERIOR		KITCHEN	1	T8 1x4 2-Lamp Wrap Fixture	62	0.062	230	1	Retrofit with (2) 12.5 Watt LED T8 4' Lamps; Direct Wire to Socket	25	0.025	93
COOK FOREST STATE PARK	RC6		EXTERIOR		EXTERIOR	1	60 Watt Incandescent A-Lamp Fixture	60	0.060	263	1	Re-Lamp with (1) 10 Watt LED A19	10	0.010	44
COOK FOREST STATE PARK	RC6		EXTERIOR		EXTERIOR	2	75 Watt Incandescent PAR38 2-Lamp	150	0.300	1,314	2	Re-Lamp with (2) 17 Watt LED PAR38	34	0.068	298
COOK FOREST STATE PARK	CABIN	R4	INTERIOR		LIVING	1	23 Watt Compact Fluorescent 5-Lamp Fixture	115	0.115	426	1	Re-Lamp with (5) 10 Watt LED A19	50	0.050	185
COOK FOREST STATE PARK	CABIN	R4	INTERIOR		KITCHEN	1	23 Watt Compact Fluorescent Fixture	23	0.023	85	1	Re-Lamp with (1) 10 Watt LED A19	10	0.010	37
COOK FOREST STATE PARK	CABIN	R4	INTERIOR		BED	1	23 Watt Compact Fluorescent 2-Lamp Fixture	46	0.046	170	1	Re-Lamp with (2) 10 Watt LED A19	20	0.020	74
COOK FOREST STATE PARK	CABIN	R4	INTERIOR		BED	1	23 Watt Compact Fluorescent 2-Lamp Fixture	46	0.046	170	1	Re-Lamp with (2) 10 Watt LED A19	20	0.020	74
COOK FOREST STATE PARK	CABIN	R4	EXTERIOR		EXTERIOR	2	60 Watt Incandescent A-Lamp Fixture	60	0.120	526	2	Re-Lamp with (1) 10 Watt LED A19	10	0.020	88
COOK FOREST STATE PARK	CABIN	R3	INTERIOR		LIVING	1	23 Watt Compact Fluorescent 5-Lamp Fixture	115	0.115	426	1	Re-Lamp with (5) 10 Watt LED A19	50	0.050	185
COOK FOREST STATE PARK	CABIN	R3	INTERIOR		KITCHEN	1	23 Watt Compact Fluorescent Fixture	23	0.023	85	1	Re-Lamp with (1) 10 Watt LED A19	10	0.010	37
COOK FOREST STATE PARK	CABIN	R3	INTERIOR		BED	1	23 Watt Compact Fluorescent 2-Lamp Fixture	46	0.046	170	1	Re-Lamp with (2) 10 Watt LED A19	20	0.020	74
COOK FOREST STATE PARK	CABIN	R3	INTERIOR		BED	1	23 Watt Compact Fluorescent 2-Lamp Fixture	46	0.046	170	1	Re-Lamp with (2) 10 Watt LED A19	20	0.020	74
COOK FOREST STATE PARK	CABIN	R3	EXTERIOR		EXTERIOR	1	60 Watt Incandescent A-Lamp Fixture	60	0.060	263	1	Re-Lamp with (1) 10 Watt LED A19	10	0.010	44
COOK FOREST STATE PARK	CABIN	R1	INTERIOR		LIVING	1	23 Watt Compact Fluorescent 5-Lamp Fixture	115	0.115	426	1	Re-Lamp with (5) 10 Watt LED A19	50	0.050	185
COOK FOREST STATE PARK	CABIN	R1	INTERIOR		KITCHEN	1	23 Watt Compact Fluorescent Fixture	23	0.023	85	1	Re-Lamp with (1) 10 Watt LED A19	10	0.010	37
COOK FOREST STATE PARK	CABIN	R1	INTERIOR		BED	1	23 Watt Compact Fluorescent 2-Lamp Fixture	46	0.046	170	1	Re-Lamp with (2) 10 Watt LED A19	20	0.020	74
COOK FOREST STATE PARK	CABIN	R1	INTERIOR		BED	1	23 Watt Compact Fluorescent 2-Lamp Fixture	46	0.046	170	1	Re-Lamp with (2) 10 Watt LED A19	20	0.020	74
COOK FOREST STATE PARK	CABIN	R1	EXTERIOR		EXTERIOR	1	60 Watt Incandescent A-Lamp Fixture	60	0.060	263	1	Re-Lamp with (1) 10 Watt LED A19	10	0.010	44
COOK FOREST STATE PARK	RC7		INTERIOR		LIVING	2	T8 1x4 2-Lamp Wrap Fixture	62	0.124	459	2	Retrofit with (2) 12.5 Watt LED T8 4' Lamps; Direct Wire to Socket	25	0.050	185

©2013 Energy Systems Group, LLC

EXISTING FIXTURES												PROPOSED FIXTURE UPGRADE				
Park/Building Name	Building	Building #	Phase	Floor	Room Description	Qty	Description	Watts	kW	kWh	Qty	Description	Watts	kW	kWh
COOK FOREST STATE PARK	RC7		INTERIOR		BEDROOM	1	23 Watt Compact Fluorescent Fixture	23	0.023	85	1	Re-Lamp with (1) 10 Watt LED A19	10	0.010	37
COOK FOREST STATE PARK	RC7		INTERIOR		BEDROOM	1	60 Watt Incandescent A-Lamp Fixture	60	0.060	222	1	Re-Lamp with (1) 10 Watt LED A19	10	0.010	37
COOK FOREST STATE PARK	RC7		INTERIOR		KITCHEN	1	T8 1x4 2-Lamp Wrap Fixture	62	0.062	230	1	Retrofit with (2) 12.5 Watt LED T8 4' Lamps; Direct Wire to Socket	25	0.025	93
COOK FOREST STATE PARK	RC7		INTERIOR		KITCHEN	1	13 Watt Compact Fluorescent Fixture	13	0.013	48	1	Re-Lamp with (1) 10 Watt LED A19	10	0.010	37
COOK FOREST STATE PARK	RC7		EXTERIOR		EXTERIOR	1	60 Watt Incandescent A-Lamp Fixture	60	0.060	263	1	Re-Lamp with (1) 10 Watt LED A19	10	0.010	44
COOK FOREST STATE PARK	RC7		EXTERIOR		EXTERIOR	1	75 Watt Incandescent PAR38 2-Lamp	150	0.150	657	1	Re-Lamp with (2) 17 Watt LED PAR38	34	0.034	149
COOK FOREST STATE PARK	RC14		INTERIOR		CABIN	1	60 Watt Incandescent 5-Lamp A-Lamp Fixture	300	0.300	1,111	1	Re-Lamp with (5) 10 Watt LED A19	50	0.050	185
COOK FOREST STATE PARK	RC14		INTERIOR		CABIN	1	60 Watt Incandescent A-Lamp Fixture	60	0.060	222	1	Re-Lamp with (1) 10 Watt LED A19	10	0.010	37
COOK FOREST STATE PARK	RC14		EXTERIOR		EXTERIOR	1	60 Watt Incandescent A-Lamp Fixture	60	0.060	263	1	Re-Lamp with (1) 10 Watt LED A19	10	0.010	44
COOK FOREST STATE PARK	RC15		INTERIOR		CABIN	1	60 Watt Incandescent 5-Lamp A-Lamp Fixture	300	0.300	1,111	1	Re-Lamp with (5) 10 Watt LED A19	50	0.050	185
COOK FOREST STATE PARK	RC15		INTERIOR		CABIN	1	60 Watt Incandescent A-Lamp Fixture	60	0.060	222	1	Re-Lamp with (1) 10 Watt LED A19	10	0.010	37
COOK FOREST STATE PARK	RC15		EXTERIOR		EXTERIOR	1	60 Watt Incandescent A-Lamp Fixture	60	0.060	263	1	Re-Lamp with (1) 10 Watt LED A19	10	0.010	44
COOK FOREST STATE PARK	IC9		INTERIOR		CABIN	1	13 Watt Compact Fluorescent 5-Lamp Fixture	65	0.065	241	1	Re-Lamp with (5) 10 Watt LED A19	50	0.050	185
COOK FOREST STATE PARK	IC9		INTERIOR		CABIN	1	60 Watt Incandescent A-Lamp Fixture	60	0.060	222	1	Re-Lamp with (1) 10 Watt LED A19	10	0.010	37
COOK FOREST STATE PARK	IC9		EXTERIOR		EXTERIOR	1	60 Watt Incandescent A-Lamp Fixture	60	0.060	263	1	Re-Lamp with (1) 10 Watt LED A19	10	0.010	44
COOK FOREST STATE PARK	CABIN	R11	INTERIOR		LIVING	5	Existing LED Fixture; No Retrofit	10	0.050	185	5	No Retrofit	10	0.050	185
COOK FOREST STATE PARK	CABIN	R11	INTERIOR		LIVING	1	60 Watt Incandescent A-Lamp Downlight Fixture	60	0.060	222	1	Re-Lamp with (1) 10 Watt LED BR30	10	0.010	37
COOK FOREST STATE PARK	CABIN	R11	INTERIOR		BEDROOM	1	Existing LED Fixture; No Retrofit	45	0.045	167	1	No Retrofit	45	0.045	167
COOK FOREST STATE PARK	CABIN	R11	INTERIOR		BEDROOM	1	Existing LED Fixture; No Retrofit	45	0.045	167	1	No Retrofit	45	0.045	167
COOK FOREST STATE PARK	CABIN	R11	INTERIOR		KITCHEN	1	Existing LED Fixture; No Retrofit	40	0.040	148	1	No Retrofit	40	0.040	148
COOK FOREST STATE PARK	CABIN	R11	INTERIOR		KITCHEN	1	Existing LED Fixture; No Retrofit	45	0.045	167	1	No Retrofit	45	0.045	167
COOK FOREST STATE PARK	CABIN	R11	EXTERIOR		EXTERIOR	2	60 Watt Incandescent A-Lamp Fixture	60	0.120	526	2	Re-Lamp with (1) 10 Watt LED A19	10	0.020	88
COOK FOREST STATE PARK	INDIAN CABIN COMFORT STATION		INTERIOR		RESTROOM	1	Existing LED Fixture; No Retrofit	10	0.010	28	1	No Retrofit	10	0.010	28
COOK FOREST STATE PARK	INDIAN CABIN COMFORT STATION		INTERIOR		RESTROOM	1	T8 1x2 2-Lamp Vanity Fixture	36	0.036	99	1	Retrofit with (2) 10 Watt LED T8 2' Lamps; Direct Wire to Socket	20	0.020	55
COOK FOREST STATE PARK	INDIAN CABIN COMFORT STATION		INTERIOR		RESTROOM	1	13 Watt Plug-In CFL 2-Lamp Canopy Fixture	28	0.028	77	1	No Retrofit	28	0.028	77
COOK FOREST STATE PARK	INDIAN CABIN COMFORT STATION		INTERIOR		RESTROOM	1	T8 1x2 2-Lamp Vanity Fixture	36	0.036	99	1	Retrofit with (2) 10 Watt LED T8 2' Lamps; Direct Wire to Socket	20	0.020	55

©2013 Energy Systems Group, LLC

EXISTING FIXTURES												PROPOSED FIXTURE UPGRADE				
Park/Building Name	Building	Building #	Phase	Floor	Room Description	Qty	Description	Watts	kW	kWh	Qty	Description	Watts	kW	kWh
COOK FOREST STATE PARK	INDIAN CABIN COMFORT STATION		INTERIOR		RESTROOM	2	13 Watt Plug-In CFL 2-Lamp Canopy Fixture	28	0.056	155	2	No Retrofit	28	0.056	155
COOK FOREST STATE PARK	INDIAN CABIN COMFORT STATION		INTERIOR		MECHANICAL ROOM	2	13 Watt Plug-In CFL 2-Lamp Canopy Fixture	28	0.056	155	2	No Retrofit	28	0.056	155
COOK FOREST STATE PARK	INDIAN CABIN COMFORT STATION		INTERIOR		RESTROOM	1	T8 1x2 2-Lamp Vanity Fixture	36	0.036	99	1	Retrofit with (2) 10 Watt LED T8 2' Lamps; Direct Wire to Socket	20	0.020	55
COOK FOREST STATE PARK	INDIAN CABIN COMFORT STATION		INTERIOR		RESTROOM	2	13 Watt Plug-In CFL 2-Lamp Canopy Fixture	28	0.056	155	2	No Retrofit	28	0.056	155
COOK FOREST STATE PARK	INDIAN CABIN COMFORT STATION		INTERIOR		RESTROOM	1	T8 1x2 2-Lamp Vanity Fixture	36	0.036	99	1	Retrofit with (2) 10 Watt LED T8 2' Lamps; Direct Wire to Socket	20	0.020	55
COOK FOREST STATE PARK	INDIAN CABIN COMFORT STATION		INTERIOR		RESTROOM	1	13 Watt Plug-In CFL 2-Lamp Canopy Fixture	28	0.028	77	1	No Retrofit	28	0.028	77
COOK FOREST STATE PARK	INDIAN CABIN COMFORT STATION		INTERIOR		RESTROOM	1	Existing LED Fixture; No Retrofit	10	0.010	28	1	No Retrofit	10	0.010	28
COOK FOREST STATE PARK	RIDGE SHOWER HOUSE 1		INTERIOR		WOMENS RESTROOM	6	T8 1x4 2-Lamp Vaportight Fixture	62	0.372	1,027	6	Retrofit with (2) 12.5 Watt LED T8 4' Lamps; Direct Wire to Socket	25	0.150	414
COOK FOREST STATE PARK	RIDGE SHOWER HOUSE 1		INTERIOR		WOMENS RESTROOM	4	60 Watt Incandescent A-Lamp Fixture	60	0.240	662	4	Re-Lamp with (1) 10 Watt LED A19	10	0.040	110
COOK FOREST STATE PARK	RIDGE SHOWER HOUSE 1		INTERIOR		MENS RESTROOM	6	T8 1x4 2-Lamp Vaportight Fixture	62	0.372	1,027	6	Retrofit with (2) 12.5 Watt LED T8 4' Lamps; Direct Wire to Socket	25	0.150	414
COOK FOREST STATE PARK	RIDGE SHOWER HOUSE 1		INTERIOR		MENS RESTROOM	4	60 Watt Incandescent A-Lamp Fixture	60	0.240	662	4	Re-Lamp with (1) 10 Watt LED A19	10	0.040	110
COOK FOREST STATE PARK	RIDGE SHOWER HOUSE 1		INTERIOR		WASH ROOM	2	T12 1x4 2-Lamp Vaportight Fixture	72	0.144	397	2	Retrofit with (2) 12.5 Watt LED T8 4' Lamps; Direct Wire to Socket	25	0.050	138
COOK FOREST STATE PARK	RIDGE SHOWER HOUSE 1		INTERIOR		MECHANICAL	4	23 Watt Compact Fluorescent Fixture	23	0.092	254	4	Re-Lamp with (1) 10 Watt LED A19	10	0.040	110
COOK FOREST STATE PARK	RIDGE SHOWER HOUSE 1		EXTERIOR		EXTERIOR	3	60 Watt Incandescent 2-Lamp Fixture	120	0.360	1,577	3	Re-Lamp with (2) 10 Watt LED A19	20	0.060	263
COOK FOREST STATE PARK	RIDGE SHOWER HOUSE 2		INTERIOR		WOMENS RESTROOM	6	T8 1x4 2-Lamp Vaportight Fixture	62	0.372	1,027	6	Retrofit with (2) 12.5 Watt LED T8 4' Lamps; Direct Wire to Socket	25	0.150	414
COOK FOREST STATE PARK	RIDGE SHOWER HOUSE 2		INTERIOR		WOMENS RESTROOM	4	60 Watt Incandescent A-Lamp Fixture	60	0.240	662	4	Re-Lamp with (1) 10 Watt LED A19	10	0.040	110
COOK FOREST STATE PARK	RIDGE SHOWER HOUSE 2		INTERIOR		MENS RESTROOM	6	T8 1x4 2-Lamp Vaportight Fixture	62	0.372	1,027	6	Retrofit with (2) 12.5 Watt LED T8 4' Lamps; Direct Wire to Socket	25	0.150	414
COOK FOREST STATE PARK	RIDGE SHOWER HOUSE 2		INTERIOR		MENS RESTROOM	4	60 Watt Incandescent A-Lamp Fixture	60	0.240	662	4	Re-Lamp with (1) 10 Watt LED A19	10	0.040	110
COOK FOREST STATE PARK	RIDGE SHOWER HOUSE 2		INTERIOR		WASH ROOM	2	T12 1x4 2-Lamp Vaportight Fixture	72	0.144	397	2	Retrofit with (2) 12.5 Watt LED T8 4' Lamps; Direct Wire to Socket	25	0.050	138
COOK FOREST STATE PARK	RIDGE SHOWER HOUSE 2		INTERIOR		MECHANICAL	4	23 Watt Compact Fluorescent Fixture	23	0.092	254	4	Re-Lamp with (1) 10 Watt LED A19	10	0.040	110
COOK FOREST STATE PARK	RIDGE SHOWER HOUSE 2		EXTERIOR		EXTERIOR	3	60 Watt Incandescent 2-Lamp Fixture	120	0.360	1,577	3	Re-Lamp with (2) 10 Watt LED A19	20	0.060	263
COOK FOREST STATE PARK	RIDGE SHOWER HOUSE 3		INTERIOR		WOMENS RESTROOM	6	T8 1x4 2-Lamp Vaportight Fixture	62	0.372	1,027	6	Retrofit with (2) 12.5 Watt LED T8 4' Lamps; Direct Wire to Socket	25	0.150	414
COOK FOREST STATE PARK	RIDGE SHOWER HOUSE 3		INTERIOR		WOMENS RESTROOM	4	60 Watt Incandescent A-Lamp Fixture	60	0.240	662	4	Re-Lamp with (1) 10 Watt LED A19	10	0.040	110
COOK FOREST STATE PARK	RIDGE SHOWER HOUSE 3		INTERIOR		MENS RESTROOM	6	T8 1x4 2-Lamp Vaportight Fixture	62	0.372	1,027	6	Retrofit with (2) 12.5 Watt LED T8 4' Lamps; Direct Wire to Socket	25	0.150	414
COOK FOREST STATE PARK	RIDGE SHOWER HOUSE 3		INTERIOR		MENS RESTROOM	4	60 Watt Incandescent A-Lamp Fixture	60	0.240	662	4	Re-Lamp with (1) 10 Watt LED A19	10	0.040	110
COOK FOREST STATE PARK	RIDGE SHOWER HOUSE 3		INTERIOR		WASH ROOM	2	T12 1x4 2-Lamp Vaportight Fixture	72	0.144	397	2	Retrofit with (2) 12.5 Watt LED T8 4' Lamps; Direct Wire to Socket	25	0.050	138

©2013 Energy Systems Group, LLC

EXISTING FIXTURES											PROPOSED FIXTURE UPGRADE				
Park/Building Name	Building	Building #	Phase	Floor	Room Description	Qty	Description	Watts	kW	kWh	Qty	Description	Watts	kW	kWh
COOK FOREST STATE PARK	RIDGE SHOWER HOUSE 3		INTERIOR		MECHANICAL	4	23 Watt Compact Fluorescent Fixture	23	0.092	254	4	Re-Lamp with (1) 10 Watt LED A19	10	0.040	110
COOK FOREST STATE PARK	RIDGE SHOWER HOUSE 3		EXTERIOR		EXTERIOR	3	60 Watt Incandescent 2-Lamp Fixture	120	0.360	1,577	3	Re-Lamp with (2) 10 Watt LED A19	20	0.060	263
COOK FOREST STATE PARK	RIDGE SHOWER HOUSE 4		INTERIOR		WOMENS RESTROOM	6	T8 1x4 2-Lamp Vaportight Fixture	62	0.372	1,027	6	Retrofit with (2) 12.5 Watt LED T8 4' Lamps; Direct Wire to Socket	25	0.150	414
COOK FOREST STATE PARK	RIDGE SHOWER HOUSE 4		INTERIOR		WOMENS RESTROOM	4	60 Watt Incandescent A-Lamp Fixture	60	0.240	662	4	Re-Lamp with (1) 10 Watt LED A19	10	0.040	110
COOK FOREST STATE PARK	RIDGE SHOWER HOUSE 4		INTERIOR		MENS RESTROOM	6	T8 1x4 2-Lamp Vaportight Fixture	62	0.372	1,027	6	Retrofit with (2) 12.5 Watt LED T8 4' Lamps; Direct Wire to Socket	25	0.150	414
COOK FOREST STATE PARK	RIDGE SHOWER HOUSE 4		INTERIOR		MENS RESTROOM	4	60 Watt Incandescent A-Lamp Fixture	60	0.240	662	4	Re-Lamp with (1) 10 Watt LED A19	10	0.040	110
COOK FOREST STATE PARK	RIDGE SHOWER HOUSE 4		INTERIOR		WASH ROOM	2	T 12 1x4 2-Lamp Vaportight Fixture	72	0.144	397	2	Retrofit with (2) 12.5 Watt LED T8 4' Lamps; Direct Wire to Socket	25	0.050	138
COOK FOREST STATE PARK	RIDGE SHOWER HOUSE 4		INTERIOR		MECHANICAL	4	23 Watt Compact Fluorescent Fixture	23	0.092	254	4	Re-Lamp with (1) 10 Watt LED A19	10	0.040	110
COOK FOREST STATE PARK	RIDGE SHOWER HOUSE 4		EXTERIOR		EXTERIOR	3	60 Watt Incandescent 2-Lamp Fixture	120	0.360	1,577	3	Re-Lamp with (2) 10 Watt LED A19	20	0.060	263
COOK FOREST STATE PARK	WASH HOUSE 1		INTERIOR		RESTROOM	1	T8 1x2 2-Lamp Vanity Fixture	36	0.036	99	1	Retrofit with (2) 10 Watt LED T8 2' Lamps; Direct Wire to Socket	20	0.020	55
COOK FOREST STATE PARK	WASH HOUSE 1		INTERIOR		RESTROOM	1	13 Watt Plug-In CFL 2-Lamp Canopy Fixture; Round	28	0.028	77	1	No Retrofit	28	0.028	77
COOK FOREST STATE PARK	WASH HOUSE 1		INTERIOR		RESTROOM	1	T8 1x2 2-Lamp Vanity Fixture	36	0.036	99	1	Retrofit with (2) 10 Watt LED T8 2' Lamps; Direct Wire to Socket	20	0.020	55
COOK FOREST STATE PARK	WASH HOUSE 1		INTERIOR		RESTROOM	1	13 Watt Plug-In CFL 2-Lamp Canopy Fixture; Round	28	0.028	77	1	No Retrofit	28	0.028	77
COOK FOREST STATE PARK	WASH HOUSE 1		INTERIOR		RESTROOM	1	T8 1x2 2-Lamp Vanity Fixture	36	0.036	99	1	Retrofit with (2) 10 Watt LED T8 2' Lamps; Direct Wire to Socket	20	0.020	55
COOK FOREST STATE PARK	WASH HOUSE 1		INTERIOR		RESTROOM	1	13 Watt Plug-In CFL 2-Lamp Canopy Fixture; Round	28	0.028	77	1	No Retrofit	28	0.028	77
COOK FOREST STATE PARK	WASH HOUSE 1		INTERIOR		RESTROOM	1	T8 1x2 2-Lamp Vanity Fixture	36	0.036	99	1	Retrofit with (2) 10 Watt LED T8 2' Lamps; Direct Wire to Socket	20	0.020	55
COOK FOREST STATE PARK	WASH HOUSE 1		INTERIOR		RESTROOM	1	13 Watt Plug-In CFL 2-Lamp Canopy Fixture; Round	28	0.028	77	1	No Retrofit	28	0.028	77
COOK FOREST STATE PARK	WASH HOUSE 1		INTERIOR		RESTROOM	1	T8 1x2 2-Lamp Vanity Fixture	36	0.036	99	1	Retrofit with (2) 10 Watt LED T8 2' Lamps; Direct Wire to Socket	20	0.020	55
COOK FOREST STATE PARK	WASH HOUSE 1		INTERIOR		RESTROOM	1	13 Watt Plug-In CFL 2-Lamp Canopy Fixture; Round	28	0.028	77	1	No Retrofit	28	0.028	77
COOK FOREST STATE PARK	WASH HOUSE 1		INTERIOR		RESTROOM	1	T8 1x2 2-Lamp Vanity Fixture	36	0.036	99	1	Retrofit with (2) 10 Watt LED T8 2' Lamps; Direct Wire to Socket	20	0.020	55
COOK FOREST STATE PARK	WASH HOUSE 1		INTERIOR		RESTROOM	1	13 Watt Plug-In CFL 2-Lamp Canopy Fixture; Round	28	0.028	77	1	No Retrofit	28	0.028	77
COOK FOREST STATE PARK	WASH HOUSE 1		INTERIOR		RESTROOM	1	T8 1x2 2-Lamp Vanity Fixture	36	0.036	99	1	Retrofit with (2) 10 Watt LED T8 2' Lamps; Direct Wire to Socket	20	0.020	55
COOK FOREST STATE PARK	WASH HOUSE 1		INTERIOR		MECHANICAL	1	13 Watt Plug-In CFL 2-Lamp Canopy Fixture	28	0.028	77	1	No Retrofit	28	0.028	77
COOK FOREST STATE PARK	WASH HOUSE 1		EXTERIOR		EXTERIOR	2	70 Watt High Pressure Sodium Canopy Fixture	90	0.180	788	2	New 20 Watt LED Canopy Fixture	21	0.042	184
COOK FOREST STATE PARK	WASH HOUSE 2		INTERIOR		RESTROOM	1	T8 1x2 2-Lamp Vanity Fixture	36	0.036	99	1	Retrofit with (2) 10 Watt LED T8 2' Lamps; Direct Wire to Socket	20	0.020	55
COOK FOREST STATE PARK	WASH HOUSE 2		INTERIOR		RESTROOM	1	13 Watt Plug-In CFL 2-Lamp Canopy Fixture; Round	28	0.028	77	1	No Retrofit	28	0.028	77
COOK FOREST STATE PARK	WASH HOUSE 2		INTERIOR		RESTROOM	1	T8 1x2 2-Lamp Vanity Fixture	36	0.036	99	1	Retrofit with (2) 10 Watt LED T8 2' Lamps; Direct Wire to Socket	20	0.020	55
COOK FOREST STATE PARK	WASH HOUSE 2		INTERIOR		RESTROOM	1	13 Watt Plug-In CFL 2-Lamp Canopy Fixture; Round	28	0.028	77	1	No Retrofit	28	0.028	77
COOK FOREST STATE PARK	WASH HOUSE 2		INTERIOR		RESTROOM	1	T8 1x2 2-Lamp Vanity Fixture	36	0.036	99	1	Retrofit with (2) 10 Watt LED T8 2' Lamps; Direct Wire to Socket	20	0.020	55
COOK FOREST STATE PARK	WASH HOUSE 2		INTERIOR		RESTROOM	1	13 Watt Plug-In CFL 2-Lamp Canopy Fixture; Round	28	0.028	77	1	No Retrofit	28	0.028	77
COOK FOREST STATE PARK	WASH HOUSE 2		INTERIOR		MECHANICAL	1	13 Watt Plug-In CFL 2-Lamp Canopy Fixture	28	0.028	77	1	No Retrofit	28	0.028	77
COOK FOREST STATE PARK	WASH HOUSE 2		EXTERIOR		EXTERIOR	2	70 Watt High Pressure Sodium Canopy Fixture	90	0.180	788	2	New 20 Watt LED Canopy Fixture	21	0.042	184
COOK FOREST STATE PARK	WASH HOUSE 3		INTERIOR		RESTROOM	1	T8 1x2 2-Lamp Vanity Fixture	36	0.036	99	1	Retrofit with (2) 10 Watt LED T8 2' Lamps; Direct Wire to Socket	20	0.020	55

©2013 Energy Systems Group, LLC

EXISTING FIXTURES											PROPOSED FIXTURE UPGRADE				
Park/Building Name	Building	Building #	Phase	Floor	Room Description	Qty	Description	Watts	kW	kWh	Qty	Description	Watts	kW	kWh
COOK FOREST STATE PARK	WASH HOUSE 3		INTERIOR		RESTROOM	1	13 Watt Plug-In CFL 2-Lamp Canopy Fixture; Round	28	0.028	77	1	No Retrofit	28	0.028	77
COOK FOREST STATE PARK	WASH HOUSE 3		INTERIOR		RESTROOM	1	T8 1x2 2-Lamp Vanity Fixture	36	0.036	99	1	Retrofit with (2) 10 Watt LED T8 2' Lamps; Direct Wire to Socket	20	0.020	55
COOK FOREST STATE PARK	WASH HOUSE 3		INTERIOR		RESTROOM	1	13 Watt Plug-In CFL 2-Lamp Canopy Fixture; Round	28	0.028	77	1	No Retrofit	28	0.028	77
COOK FOREST STATE PARK	WASH HOUSE 3		INTERIOR		RESTROOM	1	T8 1x2 2-Lamp Vanity Fixture	36	0.036	99	1	Retrofit with (2) 10 Watt LED T8 2' Lamps; Direct Wire to Socket	20	0.020	55
COOK FOREST STATE PARK	WASH HOUSE 3		INTERIOR		RESTROOM	1	13 Watt Plug-In CFL 2-Lamp Canopy Fixture; Round	28	0.028	77	1	No Retrofit	28	0.028	77
COOK FOREST STATE PARK	WASH HOUSE 3		INTERIOR		MECHANICAL	1	13 Watt Plug-In CFL 2-Lamp Canopy Fixture	28	0.028	77	1	No Retrofit	28	0.028	77
COOK FOREST STATE PARK	WASH HOUSE 3		EXTERIOR		EXTERIOR	2	70 Watt High Pressure Sodium Canopy Fixture	90	0.180	788	2	New 20 Watt LED Canopy Fixture	21	0.042	184
COOK FOREST STATE PARK	COMFORT STATION	4	EXTERIOR		EXTERIOR	4	60 Watt Incandescent Wall Pack Fixture	60	0.240	1,051	4	New 24 Watt LED Wall Pack Fixture; Non-Dark Sky	25	0.100	438
COOK FOREST STATE PARK	COMFORT STATION FIRETOWER		INTERIOR		NO LIGHTS	1	No Lights; Area(s) Not Included in Scope/Pricing	0	0.000	0	1	No Retrofit	0	0.000	0
COOK FOREST STATE PARK	OIL HOUSE		INTERIOR		NO LIGHTS	1	No Lights; Area(s) Not Included in Scope/Pricing	0	0.000	0	1	No Retrofit	0	0.000	0
COOK FOREST STATE PARK	SHELTER	1	INTERIOR		SHELTER	5	100 Watt Incandescent A-Lamp Fixture	100	0.500	1,852	5	Re-Lamp with (1) 18 Watt LED A21	18	0.090	333
COOK FOREST STATE PARK	CARPENTRY SHOP		INTERIOR		CARPENTRY SHOP	6	T5HO 2x4 6-Lamp High Bay Fixture	362	2.172	5,649	6	New 150 Watt LED High Bay Fixture	150	0.900	2,341
COOK FOREST STATE PARK	CARPENTRY SHOP		EXTERIOR		EXTERIOR	1	175 Watt Metal Halide Dusk to Dawn Fixture	213	0.213	933	1	New 26 Watt LED Dusk to Dawn Barnyard Fixture	26	0.026	114
COOK FOREST STATE PARK	CARPENTRY SHOP		EXTERIOR		EXTERIOR	4	95 Watt Incandescent PAR38 2-Lamp Fixture	190	0.760	3,329	4	Re-Lamp with (2) 17 Watt LED PAR38	34	0.136	596
COOK FOREST STATE PARK	COMFORT STATION CABIN 6		INTERIOR		MENS RESTROOM	1	T12 1x4 2-Lamp Wrap Fixture	72	0.072	330	1	Retrofit with (2) 12.5 Watt LED T8 4' Lamps; Direct Wire to Socket	25	0.025	115
COOK FOREST STATE PARK	COMFORT STATION CABIN 6		INTERIOR		MENS RESTROOM	1	T12 2x2 2-Lamp Wrap Fixture	42	0.042	192	1	Retrofit with (2) 10 Watt LED T8 2' Lamps; Direct Wire to Socket	20	0.020	92
COOK FOREST STATE PARK	COMFORT STATION CABIN 6		INTERIOR		WOMENS RESTROOM	1	T12 2x2 2-Lamp Wrap Fixture	42	0.042	192	1	Retrofit with (2) 10 Watt LED T8 2' Lamps; Direct Wire to Socket	20	0.020	92
COOK FOREST STATE PARK	COMFORT STATION CABIN 6		INTERIOR		WOMENS RESTROOM	1	T12 1x4 2-Lamp Wrap Fixture	72	0.072	330	1	Retrofit with (2) 12.5 Watt LED T8 4' Lamps; Direct Wire to Socket	25	0.025	115
COOK FOREST STATE PARK	COMFORT STATION CABIN 6		EXTERIOR		EXTERIOR	2	70 Watt High Pressure Sodium 8" Downlight Fixture	95	0.190	832	2	Retrofit with (1) 42 Watt 8" LED Downlight	42	0.084	368
COOK FOREST STATE PARK	LONG SHED		INTERIOR		SHED	20	Existing LED Fixture; No Retrofit	10	0.200	200	20	No Retrofit	10	0.200	200
COOK FOREST STATE PARK	SAWMILL THEATER		INTERIOR		THEATER	25	60 Watt Incandescent Globe Fixture	60	1.500	3,372	25	Re-Lamp with (1) 8 Watt LED G25 Globe	8	0.200	450
COOK FOREST STATE PARK	SAWMILL THEATER		INTERIOR		THEATER	4	60 Watt Incandescent A-Lamp Fixture	60	0.240	540	4	Re-Lamp with (1) 10 Watt LED A19	10	0.040	90
COOK FOREST STATE PARK	SAWMILL THEATER		INTERIOR		THEATER	10	65 Watt Incandescent PAR38	65	0.650	1,461	10	Re-Lamp with (1) 17 Watt LED PAR38	17	0.170	382
COOK FOREST STATE PARK	SAWMILL THEATER		INTERIOR		THEATER	4	25 Watt Incandescent 2-Lamp Exit Sign	50	0.200	1,752	4	New 3 watt LED Exit Sign	3	0.012	105
COOK FOREST STATE PARK	SAWMILL THEATER		INTERIOR		THEATER	8	15 Watt Incandescent Step Light Fixture	15	0.120	270	8	Re-Lamp with (1) 7 Watt LED A19	7	0.056	126
COOK FOREST STATE PARK	SAWMILL THEATER		INTERIOR		BEHIND SEATS	9	75 Watt Incandescent A-Lamp Jelly Jar Fixture	75	0.675	1,517	9	Re-Lamp with (1) 10 Watt LED A19	10	0.090	202

©2013 Energy Systems Group, LLC

EXISTING FIXTURES											PROPOSED FIXTURE UPGRADE				
Park/Building Name	Building	Building #	Phase	Floor	Room Description	Qty	Description	Watts	kW	kWh	Qty	Description	Watts	kW	kWh
COOK FOREST STATE PARK	SAWMILL THEATER		INTERIOR		STAGE	3	T12HO 1x8 2-Lamp Strip Fixture with 110 Watt Lamps	230	0.690	1,551	3	Retrofit with (4) 12.5 Watt LED T8 4' Lamps and (1) 1x8 4-Lamp Strip Kit; Direct Wire to Socket	50	0.150	337
COOK FOREST STATE PARK	SAWMILL THEATER		INTERIOR		STAGE	1	25 Watt Incandescent 2-Lamp Exit Sign	50	0.050	438	1	New 3 watt LED Exit Sign	3	0.003	26
COOK FOREST STATE PARK	SAWMILL THEATER		INTERIOR		WOMENS RESTROOM	1	T12HO 1x8 2-Lamp Strip Fixture with 110 Watt Lamps	230	0.230	517	1	Retrofit with (4) 12.5 Watt LED T8 4' Lamps and (1) 1x8 4-Lamp Strip Kit; Direct Wire to Socket	50	0.050	112
COOK FOREST STATE PARK	SAWMILL THEATER		INTERIOR		WOMENS RESTROOM	2	40 Watt Incandescent 6-Lamp Globe Fixture	240	0.480	1,079	2	Relamp with (6) 8 Watt LED G25	48	0.096	216
COOK FOREST STATE PARK	SAWMILL THEATER		INTERIOR		WOMENS RESTROOM	1	T8 1x4 2-Lamp Vanity Fixture	62	0.062	139	1	Retrofit with (2) 12.5 Watt LED T8 4' Lamps; Direct Wire to Socket	25	0.025	56
COOK FOREST STATE PARK	SAWMILL THEATER		INTERIOR		MENS RESTROOM	1	T8 1x8 2-Lamp Strip Fixture with 59 Watt Lamps	109	0.109	245	1	Retrofit with (4) 12.5 Watt LED T8 4' Lamps and (1) 1x8 4-Lamp Strip Kit; Direct Wire to Socket	50	0.050	112
COOK FOREST STATE PARK	SAWMILL THEATER		INTERIOR		MENS RESTROOM	1	40 Watt Incandescent 6-Lamp Globe Fixture	240	0.240	540	1	Relamp with (6) 8 Watt LED G25	48	0.048	108
COOK FOREST STATE PARK	SAWMILL THEATER		INTERIOR		MENS RESTROOM	1	T12 1x4 2-Lamp Vanity Fixture	72	0.072	162	1	Retrofit with (2) 12.5 Watt LED T8 4' Lamps; Direct Wire to Socket	25	0.025	56
COOK FOREST STATE PARK	SAWMILL THEATER		EXTERIOR		EXTERIOR REAR	1	65 Watt Incandescent PAR38 2-Lamp Fixture	130	0.130	569	1	Re-Lamp with (2) 17 Watt LED PAR38	34	0.034	149
COOK FOREST STATE PARK	SAWMILL THEATER		EXTERIOR		EXTERIOR REAR	1	100 Watt Incandescent A-Lamp Downlight Fixture	100	0.100	438	1	Re-Lamp with (1) 17 Watt LED BR40	17	0.017	74
COOK FOREST STATE PARK	SAWMILL THEATER		EXTERIOR		EXTERIOR FRONT	8	60 Watt Incandescent A-Lamp Jelly Jar Fixture	60	0.480	2,102	8	Re-Lamp with (1) 10 Watt LED A19	10	0.080	350
COOK FOREST STATE PARK	SAWMILL THEATER		EXTERIOR		TICKET BOOTH	1	65 Watt Incandescent 2-Lamp Fixture	130	0.130	569	1	Re-Lamp with (2) 10 Watt LED A19	20	0.020	88
COOK FOREST STATE PARK	WARMING HUT		INTERIOR		NO LIGHTS	1	No Lights; Area(s) Not Included in Scope/Pricing	0	0.000	0	1	No Retrofit	0	0.000	0
COOK FOREST STATE PARK	COMFORT STATION	1	EXTERIOR		COMFORT STATION	4	60 Watt Incandescent Wall Pack Fixture	60	0.240	1,051	4	New 24 Watt LED Wall Pack Fixture; Non-Dark Sky	25	0.100	438
COOK FOREST STATE PARK	COMFORT STATION	2	EXTERIOR		COMFORT STATION	4	60 Watt Incandescent Wall Pack Fixture	60	0.240	1,051	4	New 24 Watt LED Wall Pack Fixture; Non-Dark Sky	25	0.100	438
COOK FOREST STATE PARK	COMFORT STATION	3	EXTERIOR		COMFORT STATION	4	60 Watt Incandescent Wall Pack Fixture	60	0.240	1,051	4	New 24 Watt LED Wall Pack Fixture; Non-Dark Sky	25	0.100	438
COOK FOREST STATE PARK	COMFORT STATION	4	EXTERIOR		COMFORT STATION	4	60 Watt Incandescent Wall Pack Fixture	60	0.240	1,051	4	New 24 Watt LED Wall Pack Fixture; Non-Dark Sky	25	0.100	438
COOK FOREST STATE PARK	SHELTER	2	INTERIOR		SHELTER	5	100 Watt Incandescent A-Lamp Fixture	100	0.500	1,852	5	Re-Lamp with (1) 18 Watt LED A21	18	0.090	333
COOK FOREST STATE PARK	OFFICE		INTERIOR		MAIN OFFICE	6	T12 2x4 4-Lamp Troffer Fixture	144	0.864	1,942	6	Retrofit with (4) 12.5 Watt LED T8 4' Lamps; Direct Wire to Socket	50	0.300	674
COOK FOREST STATE PARK	OFFICE		INTERIOR		OFFICE	2	T12 1x4 2-Lamp Industrial Strip Fixture	72	0.144	324	2	Retrofit with (2) 12.5 Watt LED T8 4' Lamps; Direct Wire to Socket	25	0.050	112
COOK FOREST STATE PARK	OFFICE		INTERIOR		BASEMENT	5	100 Watt Incandescent A-Lamp Fixture	100	0.500	1,124	5	Re-Lamp with (1) 18 Watt LED A21	18	0.090	202
COOK FOREST STATE PARK	OFFICE		INTERIOR		BASEMENT	1	60 Watt Incandescent A-Lamp Fixture	60	0.060	135	1	Re-Lamp with (1) 10 Watt LED A19	10	0.010	22
COOK FOREST STATE PARK	OFFICE		INTERIOR		BASEMENT	4	T12 1x4 2-Lamp Industrial Strip Fixture	72	0.288	647	4	Retrofit with (2) 12.5 Watt LED T8 4' Lamps; Direct Wire to Socket	25	0.100	225
COOK FOREST STATE PARK	OFFICE		INTERIOR		BOILER ROOM	6	T 12 1x4 2-Lamp Vaportight Fixture	72	0.432	432	6	Retrofit with (2) 12.5 Watt LED T8 4' Lamps; Direct Wire to Socket	25	0.150	150
COOK FOREST STATE PARK	OFFICE		INTERIOR		BOILER ROOM	1	60 Watt Incandescent A-Lamp Fixture	60	0.060	60	1	Re-Lamp with (1) 10 Watt LED A19	10	0.010	10
COOK FOREST STATE PARK	OFFICE		INTERIOR		HALLWAY	1	T8 2x2 2-Lamp Wrap Fixture	36	0.036	81	1	Retrofit with (2) 10 Watt LED T8 2' Lamps; Direct Wire to Socket	20	0.020	45

©2013 Energy Systems Group, LLC

EXISTING FIXTURES											PROPOSED FIXTURE UPGRADE				
Park/Building Name	Building	Building #	Phase	Floor	Room Description	Qty	Description	Watts	kW	kWh	Qty	Description	Watts	kW	kWh
COOK FOREST STATE PARK	OFFICE		INTERIOR		OFFICE	2	T12 2x4 4-Lamp Troffer Fixture	144	0.288	647	2	Retrofit with (4) 12.5 Watt LED T8 4' Lamps; Direct Wire to Socket	50	0.100	225
COOK FOREST STATE PARK	OFFICE		INTERIOR		RESTROOM	1	100 Watt Incandescent 2-Lamp A-Lamp	200	0.200	450	1	Re-Lamp with (2) 18 Watt LED A21	36	0.036	81
COOK FOREST STATE PARK	OFFICE		INTERIOR		CLOSET	2	T8 2x2 1-Lamp Vanity Fixture	22	0.044	44	2	Retrofit with (1) 10 Watt LED T8 2' Lamp; Direct Wire to Socket	10	0.020	20
COOK FOREST STATE PARK	OFFICE		INTERIOR		EVIDENCE	1	No Access; Area(s) Not Included in Scope/Pricing	0	0.000	0	1	No Retrofit	0	0.000	0
COOK FOREST STATE PARK	OFFICE		INTERIOR		EVIDENCE	2	T12 2x4 4-Lamp Troffer Fixture	144	0.288	288	2	Retrofit with (4) 12.5 Watt LED T8 4' Lamps; Direct Wire to Socket	50	0.100	100
COOK FOREST STATE PARK	OFFICE		INTERIOR		EXTERIOR MECHANICAL	2	100 Watt Incandescent A-Lamp Fixture	100	0.200	200	2	Re-Lamp with (1) 18 Watt LED A21	18	0.036	36
COOK FOREST STATE PARK	OFFICE		INTERIOR		MENS RESTROOM EXTERIOR	3	T12 1x4 2-Lamp Vaportight Fixture	72	0.216	486	3	Retrofit with (2) 12.5 Watt LED T8 4' Lamps; Direct Wire to Socket	25	0.075	169
COOK FOREST STATE PARK	OFFICE		INTERIOR		MENS RESTROOM EXTERIOR	1	T12 1x4 2-Lamp Vaportight Fixture	72	0.072	631	1	Retrofit with (2) 12.5 Watt LED T8 4' Lamps; Direct Wire to Socket	25	0.025	219
COOK FOREST STATE PARK	OFFICE		INTERIOR		WOMENS RESTROOM EXTERIOR	3	T12 1x4 2-Lamp Vaportight Fixture	72	0.216	486	3	Retrofit with (2) 12.5 Watt LED T8 4' Lamps; Direct Wire to Socket	25	0.075	169
COOK FOREST STATE PARK	OFFICE		INTERIOR		WOMENS RESTROOM EXTERIOR	1	T12 1x4 2-Lamp Vaportight Fixture	72	0.072	631	1	Retrofit with (2) 12.5 Watt LED T8 4' Lamps; Direct Wire to Socket	25	0.025	219
COOK FOREST STATE PARK	OFFICE		EXTERIOR		EXTERIOR FRONT	4	70 Watt High Pressure Sodium Wall Pack Fixture	90	0.360	1,577	4	New 24 Watt LED Wall Pack Fixture; Non-Dark Sky	25	0.100	438
COOK FOREST STATE PARK	OFFICE		EXTERIOR		EXTERIOR FRONT	2	100 Watt Incandescent A-Lamp Fixture	100	0.200	876	2	Re-Lamp with (1) 18 Watt LED A21	18	0.036	158
COOK FOREST STATE PARK	OFFICE		EXTERIOR		EXTERIOR FRONT	1	175 Watt Metal Halide Dusk to Dawn Fixture	213	0.213	933	1	New 26 Watt LED Dusk to Dawn Barnyard Fixture	26	0.026	114
COOK FOREST STATE PARK	OFFICE		EXTERIOR		EXTERIOR FRONT	1	75 Watt Incandescent PAR38 2-Lamp	150	0.150	657	1	Re-Lamp with (2) 17 Watt LED PAR38	34	0.034	149
COOK FOREST STATE PARK	OFFICE		EXTERIOR		EXTERIOR RIGHT	2	70 Watt High Pressure Sodium Wall Pack Fixture	90	0.180	788	2	New 24 Watt LED Wall Pack Fixture; Non-Dark Sky	25	0.050	219
COOK FOREST STATE PARK	OFFICE		EXTERIOR		EXTERIOR BACK	1	100 Watt Incandescent A-Lamp Jelly Jar Fixture	100	0.100	438	1	Re-Lamp with (1) 18 Watt LED A21	18	0.018	79
COOK FOREST STATE PARK	STP		INTERIOR		STP	5	200 Watt Incandescent Jelly Jar	200	1.000	2,601	5	Re-Lamp with (1) 18 Watt LED A21	18	0.090	234
COOK FOREST STATE PARK	STP		EXTERIOR		STP EXTERIOR	5	Existing LED Fixture; No Retrofit	40	0.200	876	5	No Retrofit	40	0.200	876
COOK FOREST STATE PARK	AUTOMOTIVE SHOP		INTERIOR		SHOP	36	T12 1x4 2-Lamp Industrial Strip Fixture; Turret; Difficult Access	72	2.592	6,742	36	New 1x4 2-Lamp Industrial Fixture with (2) 12.5 Watt LED T8 4' Lamp; Direct Wire to Socket	25	0.900	2,341
COOK FOREST STATE PARK	AUTOMOTIVE SHOP		INTERIOR		STORAGE	1	100 Watt Incandescent A-Lamp Fixture	100	0.100	100	1	Re-Lamp with (1) 18 Watt LED A21	18	0.018	18
COOK FOREST STATE PARK	MAINTENANCE		INTERIOR		STORAGE	8	200 Watt Incandescent RLM Fixture	200	1.600	1,600	8	Re-Lamp with (1) 18 Watt LED A21	18	0.144	144
COOK FOREST STATE PARK	MAINTENANCE		INTERIOR		LOCKERS	2	200 Watt Incandescent RLM Fixture	200	0.400	1,040	2	Re-Lamp with (1) 18 Watt LED A21	18	0.036	94
COOK FOREST STATE PARK	MAINTENANCE		INTERIOR		BREAK ROOM	8	T12 1x4 4-Lamp Wrap Fixture	144	1.152	2,996	8	Retrofit with (4) 12.5 Watt LED T8 4' Lamps; Direct Wire to Socket	50	0.400	1,040
COOK FOREST STATE PARK	MAINTENANCE		INTERIOR		RESTROOM	1	13 Watt Compact Fluorescent Fixture	13	0.013	34	1	Re-Lamp with (1) 10 Watt LED A19	10	0.010	26
COOK FOREST STATE PARK	MAINTENANCE		INTERIOR		OFFICE	1	T12 1x4 4-Lamp Wrap Fixture	144	0.144	375	1	Retrofit with (4) 12.5 Watt LED T8 4' Lamps; Direct Wire to Socket	50	0.050	130
COOK FOREST STATE PARK	MAINTENANCE		EXTERIOR		EXTERIOR	1	75 Watt Incandescent PAR38	75	0.075	329	1	Re-Lamp with (1) 17 Watt LED PAR38	17	0.017	74

©2013 Energy Systems Group, LLC

EXISTING FIXTURES											PROPOSED FIXTURE UPGRADE				
Park/Building Name	Building	Building #	Phase	Floor	Room Description	Qty	Description	Watts	kW	kWh	Qty	Description	Watts	kW	kWh
COOK FOREST STATE PARK	MAINTENANCE		EXTERIOR		EXTERIOR	1	75 Watt Incandescent PAR38 2-Lamp	150	0.150	657	1	Re-Lamp with (2) 17 Watt LED PAR38	34	0.034	149
COOK FOREST STATE PARK	POOL FILTER BUILDING		INTERIOR		FILTER HOUSE	6	T8 1x4 2-Lamp Vaportight Fixture	62	0.372	968	6	Retrofit with (2) 12.5 Watt LED T8 4' Lamps; Direct Wire to Socket	25	0.150	390
COOK FOREST STATE PARK	POOL FILTER BUILDING		EXTERIOR		EXTERIOR	1	42 Watt Plug-In CFL Wall Pack Fixture	45	0.045	197	1	New 24 Watt LED Wall Pack Fixture; Non-Dark Sky	25	0.025	110
COOK FOREST STATE PARK	WTP		INTERIOR		INTERIOR	6	200 Watt Incandescent Jelly Jar	200	1.200	3,121	6	Re-Lamp with (1) 18 Watt LED A21	18	0.108	281
COOK FOREST STATE PARK	WTP		EXTERIOR		EXTERIOR	1	200 Watt Incandescent Jelly Jar	200	0.200	876	1	New 26 Watt LED Jelly Jar Fixture	27	0.027	118
COOK FOREST STATE PARK	SAWMILL		INTERIOR		EXTERIOR STORAGE	9	T12 1x4 2-Lamp Strip Fixture	72	0.648	648	9	Retrofit with (2) 12.5 Watt LED T8 4' Lamps; Direct Wire to Socket	25	0.225	225
COOK FOREST STATE PARK	SAWMILL		INTERIOR		EXTERIOR STORAGE	3	T12HO 1x8 2-Lamp Strip Fixture with 110 Watt Lamps	230	0.690	690	3	Retrofit with (4) 12.5 Watt LED T8 4' Lamps and (1) 1x8 4-Lamp Strip Kit; Direct Wire to Socket	50	0.150	150
COOK FOREST STATE PARK	SAWMILL		INTERIOR		SAWMILL STORE	6	50 Watt Incandescent PAR20 6-Lamp Fixture	300	1.800	4,682	6	Relamp with (6) 8 Watt LED PAR20	48	0.288	749
COOK FOREST STATE PARK	SAWMILL		INTERIOR		SAWMILL STORE	2	150 Watt Incandescent G40	150	0.300	780	2	Relamp with (1) 14 Watt LED G40	14	0.028	73
COOK FOREST STATE PARK	SAWMILL		INTERIOR		SAWMILL STORE	1	3 Watt LED 2-Lamp Exit Sign	3	0.003	26	1	No Retrofit	3	0.003	26
COOK FOREST STATE PARK	SAWMILL		INTERIOR		SAWMILL STORE	1	3 Watt LED 2-Lamp Exit Sign	3	0.003	26	1	No Retrofit	3	0.003	26
COOK FOREST STATE PARK	SAWMILL		INTERIOR		OPEN AREA	2	150 Watt Incandescent G40	150	0.300	780	2	Relamp with (1) 14 Watt LED G40	14	0.028	73
COOK FOREST STATE PARK	SAWMILL		INTERIOR		OPEN AREA	6	50 Watt Incandescent PAR20 6-Lamp Fixture	300	1.800	4,682	6	Relamp with (6) 8 Watt LED PAR20	48	0.288	749
COOK FOREST STATE PARK	SAWMILL		INTERIOR		OPEN AREA	1	3 Watt LED 2-Lamp Exit Sign	3	0.003	26	1	No Retrofit	3	0.003	26
COOK FOREST STATE PARK	SAWMILL		INTERIOR		STORAGE	3	T12 1x4 2-Lamp Industrial Strip Fixture	72	0.216	216	3	Retrofit with (2) 12.5 Watt LED T8 4' Lamps; Direct Wire to Socket	25	0.075	75
COOK FOREST STATE PARK	SAWMILL		INTERIOR		HALLWAY	3	T8 1x4 2-Lamp Vanity Fixture	62	0.186	484	3	Retrofit with (2) 12.5 Watt LED T8 4' Lamps; Direct Wire to Socket	25	0.075	195
COOK FOREST STATE PARK	SAWMILL		INTERIOR		HALLWAY	1	3 Watt LED 2-Lamp Exit Sign	3	0.003	26	1	No Retrofit	3	0.003	26
COOK FOREST STATE PARK	SAWMILL		INTERIOR		OFFICE	4	T8 2x4 4-Lamp Troffer Fixture	106	0.424	1,103	4	Retrofit with (4) 12.5 Watt LED T8 4' Lamps; Direct Wire to Socket	50	0.200	520
COOK FOREST STATE PARK	SAWMILL		INTERIOR		STORAGE	4	T8 2x4 4-Lamp Troffer Fixture	106	0.424	424	4	Retrofit with (4) 12.5 Watt LED T8 4' Lamps; Direct Wire to Socket	50	0.200	200
COOK FOREST STATE PARK	SAWMILL		INTERIOR		RECEPTION ART CENTER	7	T8 2x2 3-Lamp Surface Mount Fixture	58	0.406	1,056	7	Retrofit with (3) 10 Watt LED T8 2' Lamps; Direct Wire to Socket	30	0.210	546
COOK FOREST STATE PARK	SAWMILL		INTERIOR		RECEPTION ART CENTER	2	3 Watt LED 2-Lamp Exit Sign	3	0.006	53	2	No Retrofit	3	0.006	53
COOK FOREST STATE PARK	SAWMILL		INTERIOR		RECEPTION ART CENTER	2	60 Watt Incandescent A-Lamp Fixture	60	0.120	312	2	Re-Lamp with (1) 10 Watt LED A19	10	0.020	52
COOK FOREST STATE PARK	SAWMILL		INTERIOR		CLASS B	4	T12 2x4 3-Lamp Troffer Fixture	126	0.504	1,311	4	Retrofit with (3) 12.5 Watt LED T8 4' Lamps; Direct Wire to Socket	37.5	0.150	390
COOK FOREST STATE PARK	SAWMILL		INTERIOR		CLOSET	1	T8 1x4 2-Lamp Wrap Fixture	62	0.062	62	1	Retrofit with (2) 12.5 Watt LED T8 4' Lamps; Direct Wire to Socket	25	0.025	25
COOK FOREST STATE PARK	SAWMILL		INTERIOR		ELECTRICAL	1	T8 1x4 2-Lamp Wrap Fixture	62	0.062	62	1	Retrofit with (2) 12.5 Watt LED T8 4' Lamps; Direct Wire to Socket	25	0.025	25
COOK FOREST STATE PARK	SAWMILL		INTERIOR		CLOSET LOCKED	1	No Access; Area(s) Not Included in Scope/Pricing	0	0.000	0	1	No Retrofit	0	0.000	0

©2013 Energy Systems Group, LLC

EXISTING FIXTURES											PROPOSED FIXTURE UPGRADE				
Park/Building Name	Building	Building #	Phase	Floor	Room Description	Qty	Description	Watts	kW	kWh	Qty	Description	Watts	kW	kWh
COOK FOREST STATE PARK	SAWMILL		INTERIOR		MENS RESTROOM	4	T8 1x4 2-Lamp Vanity Fixture	62	0.248	645	4	Retrofit with (2) 12.5 Watt LED T8 4' Lamps; Direct Wire to Socket	25	0.100	260
COOK FOREST STATE PARK	SAWMILL		INTERIOR		WOMENS RESTROOM	4	T8 1x4 2-Lamp Vanity Fixture	62	0.248	645	4	Retrofit with (2) 12.5 Watt LED T8 4' Lamps; Direct Wire to Socket	25	0.100	260
COOK FOREST STATE PARK	SAWMILL		INTERIOR		CONFERENCE	12	T8 2x4 4-Lamp Troffer Fixture	106	1.272	3,308	12	Retrofit with (4) 12.5 Watt LED T8 4' Lamps; Direct Wire to Socket	50	0.600	1,561
COOK FOREST STATE PARK	SAWMILL		EXTERIOR		EXTERIOR FRONT	2	70 Watt Metal Halide Cylinder Fixture; Wall Mount	95	0.190	832	2	New 40 Watt LED Cylinder Fixture; Wall Mount	40	0.080	350
COOK FOREST STATE PARK	SAWMILL		EXTERIOR		EXTERIOR FRONT	2	175 Watt Metal Halide Dusk to Dawn Fixture	213	0.426	1,866	2	New 26 Watt LED Dusk to Dawn Barnyard Fixture	26	0.052	228
COOK FOREST STATE PARK	SAWMILL		EXTERIOR		EXTERIOR FRONT	1	40 Watt Compact Fluorescent Dusk-to-Dawn Fixture	40	0.040	175	1	New 26 Watt LED Dusk to Dawn Barnyard Fixture	26	0.026	114
COOK FOREST STATE PARK	SAWMILL		EXTERIOR		EXTERIOR LEFT	2	150 Watt Quartz Flood Fixture	150	0.300	1,314	2	New 26 Watt LED Flood Fixture	27	0.054	237
COOK FOREST STATE PARK	SAWMILL		EXTERIOR		EXTERIOR BACK	1	150 Watt Metal Halide Wall Pack Fixture	180	0.180	788	1	New 37 Watt LED Wall Pack Fixture; Non-Dark Sky	39	0.039	171
COOK FOREST STATE PARK	SAWMILL		EXTERIOR		EXTERIOR RIGHT	2	150 Watt Metal Halide Wall Pack Fixture	180	0.360	1,577	2	New 37 Watt LED Wall Pack Fixture; Non-Dark Sky	39	0.078	342
COOK FOREST STATE PARK	SAWMILL		INTERIOR		BASEMENT STORAGE	8	100 Watt Incandescent A-Lamp Fixture	100	0.800	800	8	Re-Lamp with (1) 18 Watt LED A21	18	0.144	144
COOK FOREST STATE PARK	SAWMILL		INTERIOR		EXTERIOR RESTROOM	1	T8 1x4 2-Lamp Vanity Fixture	62	0.062	161	1	Retrofit with (2) 12.5 Watt LED T8 4' Lamps; Direct Wire to Socket	25	0.025	65
COOK FOREST STATE PARK	POOL SHOWER HOUSE		INTERIOR		MENS RESTROOM	6	T12 1x4 2-Lamp Vaportight Fixture	72	0.432	1,192	6	Retrofit with (2) 12.5 Watt LED T8 4' Lamps; Direct Wire to Socket	25	0.150	414
COOK FOREST STATE PARK	POOL SHOWER HOUSE		INTERIOR		MENS RESTROOM	1	T8 1x4 1-Lamp Vanity Fixture	30	0.030	83	1	Retrofit with (1) 12.5 Watt LED T8 4' Lamps; Direct Wire to Socket	12.5	0.013	35
COOK FOREST STATE PARK	POOL SHOWER HOUSE		INTERIOR		MENS RESTROOM	1	13 Watt Plug-In CFL 2-Lamp Downlight Fixture	26	0.026	72	1	Retrofit with 9 Watt LED 6" Downlight	9	0.009	25
COOK FOREST STATE PARK	POOL SHOWER HOUSE		INTERIOR		MENS RESTROOM	5	3 Watt LED 2-Lamp Exit Sign	3	0.015	131	5	No Retrofit	3	0.015	131
COOK FOREST STATE PARK	POOL SHOWER HOUSE		INTERIOR		MENS RESTROOM	4	3 Watt LED 2-Lamp Exit Sign	3	0.012	105	4	No Retrofit	3	0.012	105
COOK FOREST STATE PARK	POOL SHOWER HOUSE		INTERIOR		WOMENS RESTROOM	6	T12 1x4 2-Lamp Vaportight Fixture	72	0.432	1,192	6	Retrofit with (2) 12.5 Watt LED T8 4' Lamps; Direct Wire to Socket	25	0.150	414
COOK FOREST STATE PARK	POOL SHOWER HOUSE		INTERIOR		WOMENS RESTROOM	1	T8 1x4 1-Lamp Vanity Fixture	30	0.030	83	1	Retrofit with (1) 12.5 Watt LED T8 4' Lamps; Direct Wire to Socket	12.5	0.013	35
COOK FOREST STATE PARK	POOL SHOWER HOUSE		INTERIOR		WOMENS RESTROOM	1	13 Watt Plug-In CFL 2-Lamp Downlight Fixture	26	0.026	72	1	Retrofit with 9 Watt LED 6" Downlight	9	0.009	25
COOK FOREST STATE PARK	POOL SHOWER HOUSE		INTERIOR		WOMENS RESTROOM	5	3 Watt LED 2-Lamp Exit Sign	3	0.015	131	5	No Retrofit	3	0.015	131
COOK FOREST STATE PARK	POOL SHOWER HOUSE		INTERIOR		WOMENS RESTROOM	4	3 Watt LED 2-Lamp Exit Sign	3	0.012	105	4	No Retrofit	3	0.012	105
COOK FOREST STATE PARK	POOL SHOWER HOUSE		INTERIOR		MECHISTORAGE	1	T8 1x4 2-Lamp Vaportight Fixture	62	0.062	62	1	Retrofit with (2) 12.5 Watt LED T8 4' Lamps; Direct Wire to Socket	25	0.025	25
COOK FOREST STATE PARK	POOL SHOWER HOUSE		INTERIOR		OFFICE LARGE	2	T8 1x4 2-Lamp Wrap Fixture	62	0.124	342	2	Retrofit with (2) 12.5 Watt LED T8 4' Lamps; Direct Wire to Socket	25	0.050	138
COOK FOREST STATE PARK	POOL SHOWER HOUSE		INTERIOR		OFFICE LARGE	1	3 Watt LED 2-Lamp Exit Sign	3	0.003	26	1	No Retrofit	3	0.003	26
COOK FOREST STATE PARK	POOL SHOWER HOUSE		INTERIOR		VESTIBULE IN OFFICE	3	T8 1x4 2-Lamp Wrap Fixture	62	0.186	513	3	Retrofit with (2) 12.5 Watt LED T8 4' Lamps; Direct Wire to Socket	25	0.075	207
COOK FOREST STATE PARK	POOL SHOWER HOUSE		INTERIOR		ELECTRICAL	1	T8 1x4 2-Lamp Industrial Strip Fixture	62	0.062	62	1	Retrofit with (2) 12.5 Watt LED T8 4' Lamps; Direct Wire to Socket	25	0.025	25

©2013 Energy Systems Group, LLC

EXISTING FIXTURES												PROPOSED FIXTURE UPGRADE				
Park/Building Name	Building	Building #	Phase	Floor	Room Description	Qty	Description	Watts	kW	kWh	Qty	Description	Watts	kW	kWh
COOK FOREST STATE PARK	POOL SHOWER HOUSE		INTERIOR		STORAGE	1	T8 1x4 2-Lamp Industrial Strip Fixture	62	0.062	62	1	Retrofit with (2) 12.5 Watt LED T8 4' Lamps; Direct Wire to Socket	25	0.025	25
COOK FOREST STATE PARK	POOL SHOWER HOUSE		INTERIOR		RESTROOM	1	T8 1x4 2-Lamp Vanity Fixture	62	0.062	171	1	Retrofit with (2) 12.5 Watt LED T8 4' Lamps; Direct Wire to Socket	25	0.025	69
COOK FOREST STATE PARK	POOL SHOWER HOUSE		INTERIOR		LOCKERS	1	T8 1x4 2-Lamp Wrap Fixture	62	0.062	171	1	Retrofit with (2) 12.5 Watt LED T8 4' Lamps; Direct Wire to Socket	25	0.025	69
COOK FOREST STATE PARK	POOL SHOWER HOUSE		INTERIOR		TICKET BOOTH	2	13 Watt Plug-In CFL 2-Lamp Downlight Fixture	26	0.052	144	2	Retrofit with 9 Watt LED 6" Downlight	9	0.018	50
COOK FOREST STATE PARK	POOL SHOWER HOUSE		INTERIOR		RESTROOM	1	T8 1x4 2-Lamp Vanity Fixture	62	0.062	171	1	Retrofit with (2) 12.5 Watt LED T8 4' Lamps; Direct Wire to Socket	25	0.025	69
COOK FOREST STATE PARK	POOL SHOWER HOUSE		EXTERIOR		EXTERIOR POOL	5	150 Watt Metal Halide Wall Pack Fixture	180	0.900	3,942	5	New 37 Watt LED Wall Pack Fixture; Non-Dark Sky	39	0.195	854
COOK FOREST STATE PARK	POOL SHOWER HOUSE		EXTERIOR		EXTERIOR FRONT	5	150 Watt Metal Halide Wall Pack Fixture	180	0.900	3,942	5	New 37 Watt LED Wall Pack Fixture; Non-Dark Sky	39	0.195	854
COOK FOREST STATE PARK	POOL SHOWER HOUSE		EXTERIOR		EXTERIOR FRONT	2	13 Watt Plug-In CFL 2-Lamp Downlight Fixture	26	0.052	228	2	Retrofit with 9 Watt LED 6" Downlight	9	0.018	79
COOK FOREST STATE PARK	LOG CABIN INN		INTERIOR		HALLWAY	2	100 Watt Incandescent A-Lamp Fixture	100	0.200	450	2	Re-Lamp with (1) 18 Watt LED A21	18	0.036	81
COOK FOREST STATE PARK	LOG CABIN INN		INTERIOR		CONFERENCE	12	100 Watt Incandescent A-Lamp Fixture	100	1.200	2,698	12	Re-Lamp with (1) 18 Watt LED A21	18	0.216	486
COOK FOREST STATE PARK	LOG CABIN INN		INTERIOR		SAWMILLS SHOP	2	T12 1x4 2-Lamp Wrap Fixture	72	0.144	324	2	Retrofit with (2) 12.5 Watt LED T8 4' Lamps; Direct Wire to Socket	25	0.050	112
COOK FOREST STATE PARK	LOG CABIN INN		INTERIOR		OFFICE	1	150 Watt Incandescent A-Lamp Fixture	150	0.150	337	1	Re-Lamp with (1) 18 Watt LED A21	18	0.018	40
COOK FOREST STATE PARK	LOG CABIN INN		INTERIOR		OFFICE	1	75 Watt Incandescent A-Lamp Fixture	75	0.075	169	1	Re-Lamp with (1) 10 Watt LED A19	10	0.010	22
COOK FOREST STATE PARK	LOG CABIN INN		INTERIOR		OFFICE	1	60 Watt Incandescent A-Lamp Fixture	60	0.060	135	1	Re-Lamp with (1) 10 Watt LED A19	10	0.010	22
COOK FOREST STATE PARK	LOG CABIN INN		INTERIOR		ATTIC	4	T12 1x4 2-Lamp Wrap Fixture	72	0.288	288	4	Retrofit with (2) 12.5 Watt LED T8 4' Lamps; Direct Wire to Socket	25	0.100	100
COOK FOREST STATE PARK	LOG CABIN INN		INTERIOR		ATTIC	2	22 Watt Incandescent A-Lamp Fixture	22	0.044	44	2	Re-Lamp with (1) 7 Watt LED A19	7	0.014	14
COOK FOREST STATE PARK	LOG CABIN INN		EXTERIOR		EXTERIOR PORCH	1	100 Watt Incandescent A-Lamp Fixture	100	0.100	438	1	Re-Lamp with (1) 18 Watt LED A21	18	0.018	79
COOK FOREST STATE PARK	COMFORT STATION RIVER CABINS		INTERIOR		MENS RESTROOM	3	T12 1x4 2-Lamp Vaportight Fixture	72	0.216	596	3	Retrofit with (2) 12.5 Watt LED T8 4' Lamps; Direct Wire to Socket	25	0.075	207
COOK FOREST STATE PARK	COMFORT STATION RIVER CABINS		INTERIOR		ELECTRICAL	2	60 Watt Incandescent A-Lamp Fixture	60	0.120	1,051	2	Re-Lamp with (1) 10 Watt LED A19	10	0.020	175
COOK FOREST STATE PARK	COMFORT STATION RIVER CABINS		INTERIOR		WOMENS RESTROOM	3	T12 1x4 2-Lamp Vaportight Fixture	72	0.216	596	3	Retrofit with (2) 12.5 Watt LED T8 4' Lamps; Direct Wire to Socket	25	0.075	207
COOK FOREST STATE PARK	COMFORT STATION RIVER CABINS		EXTERIOR		EXTERIOR	4	70 Watt High Pressure Sodium Wall Pack Fixture	90	0.360	1,577	4	New 24 Watt LED Wall Pack Fixture; Non-Dark Sky	25	0.100	438
COOK FOREST STATE PARK	SHOWER HOUSE RIVER CABINS		INTERIOR		MENS RESTROOM	4	T12 1x4 2-Lamp Vaportight Fixture	72	0.288	1,067	4	Retrofit with (2) 12.5 Watt LED T8 4' Lamps; Direct Wire to Socket	25	0.100	370
COOK FOREST STATE PARK	SHOWER HOUSE RIVER CABINS		INTERIOR		ELECTRICAL	2	60 Watt Incandescent A-Lamp Fixture	60	0.120	120	2	Re-Lamp with (1) 10 Watt LED A19	10	0.020	20
COOK FOREST STATE PARK	SHOWER HOUSE RIVER CABINS		INTERIOR		RESTROOM	1	T12 2x2 2-Lamp Vanity Fixture	42	0.042	156	1	Retrofit with (2) 10 Watt LED T8 2' Lamps; Direct Wire to Socket	20	0.020	74
COOK FOREST STATE PARK	SHOWER HOUSE RIVER CABINS		INTERIOR		RESTROOM	2	13 Watt Plug-In CFL 2-Lamp Canopy Fixture	28	0.056	207	2	No Retrofit	28	0.056	207
COOK FOREST STATE PARK	SHOWER HOUSE RIVER CABINS		INTERIOR		WOMENS RESTROOM	4	T12 1x4 2-Lamp Vaportight Fixture	72	0.288	1,067	4	Retrofit with (2) 12.5 Watt LED T8 4' Lamps; Direct Wire to Socket	25	0.100	370

©2013 Energy Systems Group, LLC

EXISTING FIXTURES												PROPOSED FIXTURE UPGRADE				
Park/Building Name	Building	Building #	Phase	Floor	Room Description	Qty	Description	Watts	kW	kWh	Qty	Description	Watts	kW	kWh
COOK FOREST STATE PARK	SHOWER HOUSE RIVER CABINS		INTERIOR		RESTROOM	1	T12 2x2 2-Lamp Vanity Fixture	42	0.042	156	1	Retrofit with (2) 10 Watt LED T8 2' Lamps; Direct Wire to Socket	20	0.020	74
COOK FOREST STATE PARK	SHOWER HOUSE RIVER CABINS		INTERIOR		RESTROOM	1	13 Watt Plug-In CFL 2-Lamp Canopy Fixture	28	0.028	104	1	No Retrofit	28	0.028	104
COOK FOREST STATE PARK	SHOWER HOUSE RIVER CABINS		INTERIOR		MECHANICAL	1	13 Watt Plug-In CFL 2-Lamp Canopy Fixture	28	0.028	28	1	No Retrofit	28	0.028	28
COOK FOREST STATE PARK	SHOWER HOUSE RIVER CABINS		EXTERIOR		EXTERIOR	2	150 Watt Metal Halide Canopy Fixture	180	0.360	1,577	2	New 20 Watt LED Canopy Fixture	21	0.042	184
COOK FOREST STATE PARK	SHOWER HOUSE RIVER CABINS		EXTERIOR		EXTERIOR	1	70 Watt High Pressure Sodium Wall Pack Fixture	90	0.090	394	1	New 24 Watt LED Wall Pack Fixture; Non-Dark Sky	25	0.025	110
COOK FOREST STATE PARK	SHOWER HOUSE RIVER CABINS		INTERIOR		EXTERIOR MECHANICAL	1	150 Watt Ingandescent A-Lamp Fixture	150	0.150	150	1	Re-Lamp with (1) 18 Watt LED A21	18	0.018	18
COOK FOREST STATE PARK	SHOWER HOUSE RIVER CABINS		EXTERIOR		EXTERIOR	1	60 Watt Incandescent A-Lamp Jelly Jar Fixture	60	0.060	263	1	Re-Lamp with (1) 10 Watt LED A19	10	0.010	44
COOK FOREST STATE PARK	SHOWER HOUSE RIVER CABINS		EXTERIOR		EXTERIOR	1	60 Watt Incandescent Jelly Jar Fixture; Red	60	0.060	263	1	Re-Lamp with (1) 10 Watt LED A19	10	0.010	44
COOK FOREST STATE PARK	SLOCUM SPRING HOUSE		INTERIOR		SPRINGHOUSE	1	23 Watt Compact Fluorescent Fixture	23	0.023	85	1	Re-Lamp with (1) 10 Watt LED A19	10	0.010	37
COOK FOREST STATE PARK	CONTACT STATION		INTERIOR		OFFICE	4	T8 1x4 4-Lamp Wrap Fixture	106	0.424	953	4	Retrofit with (4) 12.5 Watt LED T8 4' Lamps; Direct Wire to Socket	50	0.200	450
COOK FOREST STATE PARK	CONTACT STATION		INTERIOR		OFFICE	1	3 Watt LED 2-Lamp Exit Sign	3	0.003	26	1	No Retrofit	3	0.003	26
COOK FOREST STATE PARK	CONTACT STATION		INTERIOR		MECHANICAL	1	100 Watt Incandescent A-Lamp Fixture	100	0.100	100	1	Re-Lamp with (1) 18 Watt LED A21	18	0.018	18
COOK FOREST STATE PARK	CONTACT STATION		INTERIOR		RESTROOM	1	T12 1x4 2-Lamp Vaporlight Fixture	72	0.072	162	1	Retrofit with (2) 12.5 Watt LED T8 4' Lamps; Direct Wire to Socket	25	0.025	56
COOK FOREST STATE PARK	CONTACT STATION		EXTERIOR		EXTERIOR	4	60 Watt Incandescent 2-Lamp Fixture	120	0.480	2,102	4	Re-Lamp with (2) 10 Watt LED A19	20	0.080	350
COOK FOREST STATE PARK	CONTACT STATION		EXTERIOR		EXTERIOR	1	Existing LED Fixture; No Retrofit	20	0.020	88	1	No Retrofit	20	0.020	88
COOK FOREST STATE PARK	AMPHITHEATER PIT TOILET		INTERIOR		TOILETS	4	60 Watt Incandescent Wall Pack Fixture	60	0.240	240	4	Re-Lamp with (1) 10 Watt LED A19	10	0.040	40
COOK FOREST STATE PARK	AMPHITHEATER		EXTERIOR		AMPHITHEATER	2	150 Watt Quartz Flood Fixture	150	0.300	1,314	2	New 26 Watt LED Flood Fixture	27	0.054	237
COOK FOREST STATE PARK	R11		INTERIOR		NO ACCESS	1	No Access; Area(s) Not Included in Scope/Pricing	0	0.000	0	1	No Retrofit	0	0.000	0
COOK FOREST STATE PARK	R10		INTERIOR		NOT USED	1	Not in Use; Area(s) Not Included in Scope/Pricing	0	0.000	0	1	No Retrofit	0	0.000	0
COOK FOREST STATE PARK	R9		INTERIOR		NOT USED	1	Not in Use; Area(s) Not Included in Scope/Pricing	0	0.000	0	1	No Retrofit	0	0.000	0
COOK FOREST STATE PARK	R8		INTERIOR		NOT USED	1	Not in Use; Area(s) Not Included in Scope/Pricing	0	0.000	0	1	No Retrofit	0	0.000	0
COOK FOREST STATE PARK	COOK HOMESTEAD BED AND BREAKFAST		INTERIOR		ATTIC	1	T12 1x4 2-Lamp Strip Fixture	72	0.072	72	1	Retrofit with (2) 12.5 Watt LED T8 4' Lamps; Direct Wire to Socket	25	0.025	25
COOK FOREST STATE PARK	COOK HOMESTEAD BED AND BREAKFAST		INTERIOR		ROOM 9	1	13 Watt Compact Fluorescent Fixture	13	0.013	29	1	Re-Lamp with (1) 10 Watt LED A19	10	0.010	22
COOK FOREST STATE PARK	COOK HOMESTEAD BED AND BREAKFAST		INTERIOR		ROOM 9	1	60 Watt Incandescent 5-Lamp A-Lamp Fixture	300	0.300	674	1	Re-Lamp with (5) 10 Watt LED A19	50	0.050	112
COOK FOREST STATE PARK	COOK HOMESTEAD BED AND BREAKFAST		INTERIOR		RESTROOM	2	40 Watt Incandescent A-Lamp Fixture	40	0.080	180	2	Re-Lamp with (1) 7 Watt LED A19	7	0.014	31
COOK FOREST STATE PARK	COOK HOMESTEAD BED AND BREAKFAST		INTERIOR		HALLWAY	3	40 Watt Incandescent Candelabra Fixture	40	0.120	270	3	Re-Lamp with (1) 5 Watt LED Candelabra	5	0.015	34

©2013 Energy Systems Group, LLC

EXISTING FIXTURES												PROPOSED FIXTURE UPGRADE				
Park/Building Name	Building	Building #	Phase	Floor	Room Description	Qty	Description	Watts	kW	kWh	Qty	Description	Watts	kW	kWh
COOK FOREST STATE PARK	COOK HOMESTEAD BED AND BREAKFAST		INTERIOR		HALLWAY	2	3 Watt LED 2-Lamp Exit Sign	3	0.006	53	2	No Retrofit	3	0.006	53
COOK FOREST STATE PARK	COOK HOMESTEAD BED AND BREAKFAST		INTERIOR		SENECA ROOM	1	60 Watt Incandescent 4-Lamp Fixture	240	0.240	540	1	Re-Lamp with (4) 10 Watt LED A19	40	0.040	90
COOK FOREST STATE PARK	COOK HOMESTEAD BED AND BREAKFAST		INTERIOR		COOK SUITE	1	60 Watt Incandescent 4-Lamp Fixture	240	0.240	540	1	Re-Lamp with (4) 10 Watt LED A19	40	0.040	90
COOK FOREST STATE PARK	COOK HOMESTEAD BED AND BREAKFAST		INTERIOR		RESTROOM	1	60 Watt Incandescent 4-Lamp Fixture	240	0.240	540	1	Re-Lamp with (4) 10 Watt LED A19	40	0.040	90
COOK FOREST STATE PARK	COOK HOMESTEAD BED AND BREAKFAST		INTERIOR		RESTROOM	1	13 Watt Compact Fluorescent 4-Lamp Fixture	52	0.052	117	1	Re-Lamp with (4) 10 Watt LED A19	40	0.040	90
COOK FOREST STATE PARK	COOK HOMESTEAD BED AND BREAKFAST		INTERIOR		RESTROOM	1	60 Watt Incandescent 2-Lamp Fixture	120	0.120	270	1	Re-Lamp with (2) 10 Watt LED A19	20	0.020	45
COOK FOREST STATE PARK	COOK HOMESTEAD BED AND BREAKFAST		INTERIOR		HEMLOCK	1	13 Watt Compact Fluorescent 4-Lamp Fixture	52	0.052	117	1	Re-Lamp with (4) 10 Watt LED A19	40	0.040	90
COOK FOREST STATE PARK	COOK HOMESTEAD BED AND BREAKFAST		INTERIOR		RESTROOM	1	40 Watt Incandescent A-Lamp Fixture	40	0.040	90	1	Re-Lamp with (1) 7 Watt LED A19	7	0.007	16
COOK FOREST STATE PARK	COOK HOMESTEAD BED AND BREAKFAST		INTERIOR		RESTROOM	2	40 Watt Incandescent A-Lamp Fixture	40	0.080	180	2	Re-Lamp with (1) 7 Watt LED A19	7	0.014	31
COOK FOREST STATE PARK	COOK HOMESTEAD BED AND BREAKFAST		INTERIOR		RESTROOM	1	50 Watt Incandescent R20 Fixture	50	0.050	112	1	Re-Lamp with (1) 8 Watt LED BR20	8	0.008	18
COOK FOREST STATE PARK	COOK HOMESTEAD BED AND BREAKFAST		INTERIOR		RESTROOM	2	60 Watt Incandescent A-Lamp Fixture	60	0.120	270	2	Re-Lamp with (1) 10 Watt LED A19	10	0.020	45
COOK FOREST STATE PARK	COOK HOMESTEAD BED AND BREAKFAST		INTERIOR		HALLWAY	1	60 Watt Incandescent A-Lamp Fixture	60	0.060	135	1	Re-Lamp with (1) 10 Watt LED A19	10	0.010	22
COOK FOREST STATE PARK	COOK HOMESTEAD BED AND BREAKFAST		INTERIOR		HALLWAY	1	3 Watt LED 2-Lamp Exit Sign	3	0.003	26	1	No Retrofit	3	0.003	26
COOK FOREST STATE PARK	COOK HOMESTEAD BED AND BREAKFAST		INTERIOR		FISHER	1	60 Watt Incandescent 3-Lamp Fixture	180	0.180	405	1	Re-Lamp with (3) 10 Watt LED A19	30	0.030	67
COOK FOREST STATE PARK	COOK HOMESTEAD BED AND BREAKFAST		INTERIOR		BALD EAGLES	1	13 Watt Compact Fluorescent 3-Lamp Fixture	39	0.039	88	1	Re-Lamp with (3) 10 Watt LED A19	30	0.030	67
COOK FOREST STATE PARK	COOK HOMESTEAD BED AND BREAKFAST		INTERIOR		FOREST CATHEDRAL	1	40 Watt Incandescent 4-Lamp Fixture	160	0.160	360	1	Re-Lamp with (4) 7 Watt LED A19	28	0.028	63
COOK FOREST STATE PARK	COOK HOMESTEAD BED AND BREAKFAST		INTERIOR		RESTROOM	1	60 Watt Incandescent A-Lamp Fixture	60	0.060	135	1	Re-Lamp with (1) 10 Watt LED A19	10	0.010	22
COOK FOREST STATE PARK	COOK HOMESTEAD BED AND BREAKFAST		INTERIOR		STAIRWELL	1	23 Watt Compact Fluorescent Fixture	23	0.023	52	1	Re-Lamp with (1) 10 Watt LED A19	10	0.010	22
COOK FOREST STATE PARK	COOK HOMESTEAD BED AND BREAKFAST		INTERIOR		KITCHEN SMALL	1	40 Watt Incandescent 4-Lamp Fixture	160	0.160	360	1	Re-Lamp with (4) 7 Watt LED A19	28	0.028	63
COOK FOREST STATE PARK	COOK HOMESTEAD BED AND BREAKFAST		INTERIOR		KITCHEN SMALL	1	3 Watt LED 2-Lamp Exit Sign	3	0.003	26	1	No Retrofit	3	0.003	26
COOK FOREST STATE PARK	COOK HOMESTEAD BED AND BREAKFAST		INTERIOR		KITCHEN LARGE	1	60 Watt Incandescent 3-Lamp Fixture	180	0.180	405	1	Re-Lamp with (3) 10 Watt LED A19	30	0.030	67
COOK FOREST STATE PARK	COOK HOMESTEAD BED AND BREAKFAST		INTERIOR		KITCHEN LARGE	1	Existing LED Fixture; No Retrofit	10	0.010	22	1	No Retrofit	10	0.010	22
COOK FOREST STATE PARK	COOK HOMESTEAD BED AND BREAKFAST		INTERIOR		KITCHEN LARGE	7	65 Watt Incandescent R30 Fixture	65	0.455	1,023	7	Re-Lamp with (1) 10 Watt LED BR30	10	0.070	157
COOK FOREST STATE PARK	COOK HOMESTEAD BED AND BREAKFAST		INTERIOR		BOOK ROOM	1	60 Watt Incandescent 3-Lamp Fixture	180	0.180	405	1	Re-Lamp with (3) 10 Watt LED A19	30	0.030	67
COOK FOREST STATE PARK	COOK HOMESTEAD BED AND BREAKFAST		INTERIOR		BOOK ROOM	1	3 Watt LED 2-Lamp Exit Sign	3	0.003	26	1	No Retrofit	3	0.003	26
COOK FOREST STATE PARK	COOK HOMESTEAD BED AND BREAKFAST		INTERIOR		BOOK ROOM	1	3 Watt LED 2-Lamp Exit Sign	3	0.003	26	1	No Retrofit	3	0.003	26

©2013 Energy Systems Group, LLC

EXISTING FIXTURES											PROPOSED FIXTURE UPGRADE				
Park/Building Name	Building	Building #	Phase	Floor	Room Description	Qty	Description	Watts	kW	kWh	Qty	Description	Watts	kW	kWh
COOK FOREST STATE PARK	COOK HOMESTEAD BED AND BREAKFAST		INTERIOR		DINING	2	40 Watt Incandescent 4-Lamp Candelabra Fixture	160	0.320	719	2	Re-Lamp with (4) 5 Watt LED Candelabra	20	0.040	90
COOK FOREST STATE PARK	COOK HOMESTEAD BED AND BREAKFAST		INTERIOR		PIANO ROOM	1	40 Watt Incandescent 3-Lamp Candelabra Fixture	120	0.120	270	1	Re-Lamp with (3) 5 Watt LED Candelabra	15	0.015	34
COOK FOREST STATE PARK	COOK HOMESTEAD BED AND BREAKFAST		INTERIOR		VESTIBULE	1	60 Watt Incandescent 2-Lamp Fixture	120	0.120	270	1	Re-Lamp with (2) 10 Watt LED A19	20	0.020	45
COOK FOREST STATE PARK	COOK HOMESTEAD BED AND BREAKFAST		INTERIOR		VESTIBULE	1	3 Watt LED 2-Lamp Exit Sign	3	0.003	26	1	No Retrofit	3	0.003	26
COOK FOREST STATE PARK	COOK HOMESTEAD BED AND BREAKFAST		INTERIOR		HALLWAY	1	40 Watt Incandescent Candelabra Fixture	40	0.040	90	1	Re-Lamp with (1) 5 Watt LED Candelabra	5	0.005	11
COOK FOREST STATE PARK	COOK HOMESTEAD BED AND BREAKFAST		INTERIOR		HALLWAY	1	3 Watt LED 2-Lamp Exit Sign	3	0.003	26	1	No Retrofit	3	0.003	26
COOK FOREST STATE PARK	COOK HOMESTEAD BED AND BREAKFAST		INTERIOR		OFFICE	1	60 Watt Incandescent 3-Lamp Fixture	180	0.180	405	1	Re-Lamp with (3) 10 Watt LED A19	30	0.030	67
COOK FOREST STATE PARK	COOK HOMESTEAD BED AND BREAKFAST		INTERIOR		RESTROOM	1	60 Watt Incandescent A-Lamp Fixture	60	0.060	135	1	Re-Lamp with (1) 10 Watt LED A19	10	0.010	22
COOK FOREST STATE PARK	COOK HOMESTEAD BED AND BREAKFAST		INTERIOR		CLOSET	1	13 Watt Compact Fluorescent Fixture	13	0.013	13	1	Re-Lamp with (1) 10 Watt LED A19	10	0.010	10
COOK FOREST STATE PARK	COOK HOMESTEAD BED AND BREAKFAST		INTERIOR		CHESTNUT	1	No Lights; Area(s) Not Included in Scope/Pricing	0	0.000	0	1	No Retrofit	0	0.000	0
COOK FOREST STATE PARK	COOK HOMESTEAD BED AND BREAKFAST		INTERIOR		RESTROOM	1	60 Watt Incandescent 3-Lamp Fixture	180	0.180	405	1	Re-Lamp with (3) 10 Watt LED A19	30	0.030	67
COOK FOREST STATE PARK	COOK HOMESTEAD BED AND BREAKFAST		INTERIOR		RESTROOM	1	60 Watt Incandescent 3-Lamp Fixture	180	0.180	405	1	Re-Lamp with (3) 10 Watt LED A19	30	0.030	67
COOK FOREST STATE PARK	COOK HOMESTEAD BED AND BREAKFAST		INTERIOR		CLOSET	1	60 Watt Incandescent A-Lamp Fixture	60	0.060	60	1	Re-Lamp with (1) 10 Watt LED A19	10	0.010	10
COOK FOREST STATE PARK	COOK HOMESTEAD BED AND BREAKFAST		INTERIOR		CLOSET	1	60 Watt Incandescent A-Lamp Fixture	60	0.060	60	1	Re-Lamp with (1) 10 Watt LED A19	10	0.010	10
COOK FOREST STATE PARK	COOK HOMESTEAD BED AND BREAKFAST		INTERIOR		CLARION	1	No Lights; Area(s) Not Included in Scope/Pricing	0	0.000	0	1	No Retrofit	0	0.000	0
COOK FOREST STATE PARK	COOK HOMESTEAD BED AND BREAKFAST		INTERIOR		RESTROOM	2	60 Watt Incandescent A-Lamp Fixture	60	0.120	270	2	Re-Lamp with (1) 10 Watt LED A19	10	0.020	45
COOK FOREST STATE PARK	COOK HOMESTEAD BED AND BREAKFAST		INTERIOR		RESTROOM	1	13 Watt Compact Fluorescent 2-Lamp Fixture	26	0.026	58	1	Re-Lamp with (2) 10 Watt LED A19	20	0.020	45
COOK FOREST STATE PARK	COOK HOMESTEAD BED AND BREAKFAST		INTERIOR		BASEMENT	24	23 Watt Compact Fluorescent Fixture	23	0.552	1,241	24	Re-Lamp with (1) 10 Watt LED A19	10	0.240	540
COOK FOREST STATE PARK	COOK HOMESTEAD BED AND BREAKFAST		EXTERIOR		PORCH	4	40 Watt Incandescent 3-Lamp Candelabra Fixture	120	0.480	2,102	4	Re-Lamp with (3) 5 Watt LED Candelabra	15	0.060	263
COOK FOREST STATE PARK	COOK HOMESTEAD BED AND BREAKFAST		EXTERIOR		BACK PORCH	1	23 Watt Compact Fluorescent Fixture	23	0.023	101	1	Re-Lamp with (1) 10 Watt LED A19	10	0.010	44
COOK FOREST STATE PARK	COOK HOMESTEAD BED AND BREAKFAST		EXTERIOR		EXTERIOR RIGHT	1	150 Watt Quartz 2-Head Flood Fixture	300	0.300	1,314	1	(2) New 26 Watt LED Flood Fixtures	52	0.052	228
LAUREL HILL STATE PARK	PARK OFFICE		INTERIOR		LOBBY	1	25 Watt Incandescent 2-Lamp Exit Sign	50	0.050	438	1	New 3 watt LED Exit Sign	3	0.003	26
LAUREL HILL STATE PARK	PARK OFFICE		INTERIOR		LOBBY	6	50 Watt Incandescent MR16 Fixture	50	0.300	674	6	Re-Lamp with (1) 7 Watt LED MR16	7	0.042	94
LAUREL HILL STATE PARK	PARK OFFICE		INTERIOR		LOBBY	12	T12 2x4 2-Lamp Volumetric Troffer Fixture	72	0.864	1,942	12	Retrofit with (2) 12.5 Watt LED T8 4' Lamps; Direct Wire to Socket	25	0.300	674
LAUREL HILL STATE PARK	PARK OFFICE		INTERIOR		LOBBY	2	50 Watt Incandescent R20 Fixture	50	0.100	225	2	Re-Lamp with (1) 8 Watt LED BR20	8	0.016	36
LAUREL HILL STATE PARK	PARK OFFICE		INTERIOR		KITCHEN	1	T12 1x4 4-Lamp Wrap Fixture	144	0.144	324	1	Retrofit with (4) 12.5 Watt LED T8 4' Lamps; Direct Wire to Socket	50	0.050	112

©2013 Energy Systems Group, LLC

EXISTING FIXTURES												PROPOSED FIXTURE UPGRADE				
Park/Building Name	Building	Building #	Phase	Floor	Room Description	Qty	Description	Watts	kW	kWh	Qty	Description	Watts	kW	kWh
LAUREL HILL STATE PARK	PARK OFFICE		INTERIOR		RESTROOM	1	13 Watt Compact Fluorescent 2-Lamp Fixture	26	0.026	58	1	Re-Lamp with (2) 10 Watt LED A19	20	0.020	45
LAUREL HILL STATE PARK	PARK OFFICE		INTERIOR		BACK-OPEN OFFICE	14	T12 2x4 2-Lamp Volumetric Troffer Fixture	72	1.008	2,266	14	Retrofit with (2) 12.5 Watt LED T8 4' Lamps; Direct Wire to Socket	25	0.350	787
LAUREL HILL STATE PARK	PARK OFFICE		INTERIOR		OFFICE	4	T12 2x4 2-Lamp Volumetric Troffer Fixture	72	0.288	647	4	Retrofit with (2) 12.5 Watt LED T8 4' Lamps; Direct Wire to Socket	25	0.100	225
LAUREL HILL STATE PARK	PARK OFFICE		INTERIOR		OFFICE	4	T12 2x4 2-Lamp Volumetric Troffer Fixture	72	0.288	647	4	Retrofit with (2) 12.5 Watt LED T8 4' Lamps; Direct Wire to Socket	25	0.100	225
LAUREL HILL STATE PARK	PARK OFFICE		INTERIOR		RANGER OFFICE	5	T8 1x4 4-Lamp Wrap Fixture	106	0.530	1,191	5	Retrofit with (4) 12.5 Watt LED T8 4' Lamps; Direct Wire to Socket	50	0.250	562
LAUREL HILL STATE PARK	PARK OFFICE		INTERIOR		STAIRS	2	T12 2x4 2-Lamp Volumetric Troffer Fixture	72	0.144	324	2	Retrofit with (2) 12.5 Watt LED T8 4' Lamps; Direct Wire to Socket	25	0.050	112
LAUREL HILL STATE PARK	PARK OFFICE		INTERIOR		STAIRS	1	T12 2x4 2-Lamp Volumetric Troffer Fixture	72	0.072	162	1	Retrofit with (2) 12.5 Watt LED T8 4' Lamps; Direct Wire to Socket	25	0.025	56
LAUREL HILL STATE PARK	PARK OFFICE		INTERIOR		LOWER CONFERENCE	16	T12 2x4 2-Lamp Volumetric Troffer Fixture	72	1.152	2,590	16	Retrofit with (2) 12.5 Watt LED T8 4' Lamps; Direct Wire to Socket	25	0.400	899
LAUREL HILL STATE PARK	PARK OFFICE		INTERIOR		LOWER CONFERENCE	4	50 Watt Incandescent MR16 Fixture	50	0.200	450	4	Re-Lamp with (1) 7 Watt LED MR16	7	0.028	63
LAUREL HILL STATE PARK	PARK OFFICE		INTERIOR		LOWER CONFERENCE	2	25 Watt Incandescent 2-Lamp Exit Sign	50	0.100	876	2	New 3 watt LED Exit Sign	3	0.006	53
LAUREL HILL STATE PARK	PARK OFFICE		INTERIOR		MECHANICAL	1	T12 2x4 4-Lamp Troffer Fixture	144	0.144	144	1	Retrofit with (4) 12.5 Watt LED T8 4' Lamps; Direct Wire to Socket	50	0.050	50
LAUREL HILL STATE PARK	PARK OFFICE		INTERIOR		STORAGE	1	60 Watt Incandescent A-Lamp Fixture	60	0.060	60	1	Re-Lamp with (1) 10 Watt LED A19	10	0.010	10
LAUREL HILL STATE PARK	PARK OFFICE		INTERIOR		WOMENS RESTROOM-PUBLIC	1	13 Watt Compact Fluorescent 2-Lamp Fixture	26	0.026	58	1	Re-Lamp with (2) 10 Watt LED A19	20	0.020	45
LAUREL HILL STATE PARK	PARK OFFICE		INTERIOR		MENS RESTROOM - PUBLIC	1	13 Watt Compact Fluorescent 2-Lamp Fixture	26	0.026	58	1	Re-Lamp with (2) 10 Watt LED A19	20	0.020	45
LAUREL HILL STATE PARK	PARK OFFICE		EXTERIOR		PORCH	2	Existing LED Fixture; No Retrofit	20	0.040	175	2	No Retrofit	20	0.040	175
LAUREL HILL STATE PARK	PARK OFFICE		EXTERIOR		PORCH	1	13 Watt Compact Fluorescent 2-Lamp Fixture	26	0.026	114	1	Re-Lamp with (2) 10 Watt LED A19	20	0.020	88
LAUREL HILL STATE PARK	PARK OFFICE		EXTERIOR		BACK	1	60 Watt Incandescent A-Lamp Fixture	60	0.060	263	1	Re-Lamp with (1) 10 Watt LED A19	10	0.010	44
LAUREL HILL STATE PARK	PARK OFFICE		EXTERIOR		BACK	1	Existing LED Fixture; No Retrofit	40	0.040	175	1	No Retrofit	40	0.040	175
LAUREL HILL STATE PARK	GENERATOR		INTERIOR			4	60 Watt Incandescent A-Lamp Fixture	60	0.240	624	4	Re-Lamp with (1) 10 Watt LED A19	10	0.040	104
LAUREL HILL STATE PARK	GENERATOR		INTERIOR			4	60 Watt Incandescent A-Lamp Fixture	60	0.240	624	4	Re-Lamp with (1) 10 Watt LED A19	10	0.040	104
LAUREL HILL STATE PARK	LITTLE HOUSE		EXTERIOR		PORCH	1	Existing LED Fixture; No Retrofit	40	0.040	175	1	No Retrofit	40	0.040	175
LAUREL HILL STATE PARK	LITTLE HOUSE		INTERIOR			1	T12 1x4 4-Lamp Wrap Fixture	144	0.144	533	1	Retrofit with (4) 12.5 Watt LED T8 4' Lamps; Direct Wire to Socket	50	0.050	185
LAUREL HILL STATE PARK	LITTLE HOUSE		INTERIOR			2	60 Watt Incandescent A-Lamp Fixture	60	0.120	444	2	Re-Lamp with (1) 10 Watt LED A19	10	0.020	74
LAUREL HILL STATE PARK	LITTLE HOUSE		INTERIOR		HALL	1	60 Watt Incandescent Globe Fixture	60	0.060	222	1	Re-Lamp with (1) 8 Watt LED G25 Globe	8	0.008	30
LAUREL HILL STATE PARK	LITTLE HOUSE		INTERIOR		OFFICE	2	T12 1x4 2-Lamp Wrap Fixture; Damaged	72	0.144	533	2	New 1x4 2-Lamp Wrap Fixture with (2) 12.5 Watt LED T8 4' Lamp; Direct Wire to Socket	25	0.050	185
LAUREL HILL STATE PARK	LITTLE HOUSE		INTERIOR		OFFICE	1	T12 1x4 2-Lamp Strip Fixture	72	0.072	267	1	Retrofit with (2) 12.5 Watt LED T8 4' Lamps; Direct Wire to Socket	25	0.025	93

©2013 Energy Systems Group, LLC

EXISTING FIXTURES												PROPOSED FIXTURE UPGRADE				
Park/Building Name	Building	Building #	Phase	Floor	Room Description	Qty	Description	Watts	kW	kWh	Qty	Description	Watts	kW	kWh
LAUREL HILL STATE PARK	LITTLE HOUSE		INTERIOR		LOCKER	1	Existing LED Fixture; No Retrofit	20	0.020	74	1	No Retrofit	20	0.020	74
LAUREL HILL STATE PARK	LITTLE HOUSE		INTERIOR		KEY OFFICE	1	60 Watt Incandescent A-Lamp Fixture	60	0.060	222	1	Re-Lamp with (1) 10 Watt LED A19	10	0.010	37
LAUREL HILL STATE PARK	LITTLE HOUSE		INTERIOR		EVIDENCE LOCKER	2	T12 1x4 2-Lamp Wrap Fixture	72	0.144	144	2	Retrofit with (2) 12.5 Watt LED T8 4' Lamps; Direct Wire to Socket	25	0.050	50
LAUREL HILL STATE PARK	LITTLE HOUSE		INTERIOR		BASEMENT	8	60 Watt Incandescent A-Lamp Fixture	60	0.480	1,778	8	Re-Lamp with (1) 10 Watt LED A19	10	0.080	296
LAUREL HILL STATE PARK	INFORMATION KIOSK		INTERIOR		PAVILION	4	9 Watt Plug-In CFL 2-Lamp Downlight Fixture	18	0.072	199	4	No Retrofit	18	0.072	199
LAUREL HILL STATE PARK	INFORMATION KIOSK		INTERIOR		PAVILION	3	Existing LED Fixture; No Retrofit	20	0.060	166	3	No Retrofit	20	0.060	166
LAUREL HILL STATE PARK	INFORMATION KIOSK		INTERIOR		PAVILION	3	23 Watt Compact Fluorescent R40	23	0.069	190	3	Re-Lamp with (1) 17 Watt LED BR40	17	0.051	141
LAUREL HILL STATE PARK	MAINTENANCE SHOP		INTERIOR		PARTS	2	Existing LED Fixture; No Retrofit	40	0.080	208	2	No Retrofit	40	0.080	208
LAUREL HILL STATE PARK	MAINTENANCE SHOP		INTERIOR		PARTS OFFICE	4	Existing LED Fixture; No Retrofit	40	0.160	416	4	No Retrofit	40	0.160	416
LAUREL HILL STATE PARK	MAINTENANCE SHOP		INTERIOR		BREAK ROOM	2	Existing LED Fixture; No Retrofit	40	0.080	208	2	No Retrofit	40	0.080	208
LAUREL HILL STATE PARK	MAINTENANCE SHOP		INTERIOR		TOOL ROOM	2	Existing LED Fixture; No Retrofit	40	0.080	208	2	No Retrofit	40	0.080	208
LAUREL HILL STATE PARK	MAINTENANCE SHOP		INTERIOR		TOOL CAGE	2	Existing LED Fixture; No Retrofit	40	0.080	208	2	No Retrofit	40	0.080	208
LAUREL HILL STATE PARK	MAINTENANCE SHOP		INTERIOR		SHOP	9	400 Watt High Pressure Sodium High Bay Fixture; Plug & Cord	455	4.095	10,651	9	New 150 Watt LED High Bay Fixture	150	1.350	3,511
LAUREL HILL STATE PARK	MAINTENANCE SHOP		EXTERIOR		FRONT	1	Existing LED Fixture; No Retrofit	40	0.040	175	1	No Retrofit	40	0.040	175
LAUREL HILL STATE PARK	MAINTENANCE SHOP		EXTERIOR		SIDE	1	Existing LED Fixture; No Retrofit	40	0.040	175	1	No Retrofit	40	0.040	175
LAUREL HILL STATE PARK	MAINTENANCE SHOP		EXTERIOR		BACK	1	Existing LED Fixture; No Retrofit	40	0.040	175	1	No Retrofit	40	0.040	175
LAUREL HILL STATE PARK	MAINTENANCE STORAGE		INTERIOR		STORAGE	2	60 Watt Incandescent A-Lamp Fixture	60	0.120	120	2	Re-Lamp with (1) 10 Watt LED A19	10	0.020	20
LAUREL HILL STATE PARK	MAINTENANCE STORAGE		INTERIOR		BAY	2	60 Watt Incandescent A-Lamp Fixture	60	0.120	120	2	Re-Lamp with (1) 10 Watt LED A19	10	0.020	20
LAUREL HILL STATE PARK	MAINTENANCE STORAGE		INTERIOR		ATTIC	3	60 Watt Incandescent A-Lamp Fixture	60	0.180	180	3	Re-Lamp with (1) 10 Watt LED A19	10	0.030	30
LAUREL HILL STATE PARK	MAINTENANCE STORAGE		INTERIOR		LAWN MOWER BAY	8	60 Watt Incandescent A-Lamp Fixture	60	0.480	480	8	Re-Lamp with (1) 10 Watt LED A19	10	0.080	80
LAUREL HILL STATE PARK	CARPENTER SHOP		INTERIOR		SHOP	14	T8 1x8 2-Lamp Strip Fixture with 59 Watt Lamps	109	1.526	3,969	14	Retrofit with (4) 12.5 Watt LED T8 4' Lamps and (1) 15 Lamp Strip Kit; Direct Wire to Socket	50	0.700	1,821
LAUREL HILL STATE PARK	CARPENTER SHOP		INTERIOR		CHEMICAL STORAGE	1	Existing LED Fixture; No Retrofit	40	0.040	40	1	No Retrofit	40	0.040	40
LAUREL HILL STATE PARK	CARPENTER SHOP		INTERIOR		VEHICLE BAY	2	Existing LED Fixture; No Retrofit	40	0.080	208	2	No Retrofit	40	0.080	208
LAUREL HILL STATE PARK	CARPENTER SHOP		INTERIOR		HALL	1	Existing LED Fixture; No Retrofit	40	0.040	104	1	No Retrofit	40	0.040	104
LAUREL HILL STATE PARK	CARPENTER SHOP		INTERIOR		RESTROOM	1	Existing LED Fixture; No Retrofit	40	0.040	104	1	No Retrofit	40	0.040	104
LAUREL HILL STATE PARK	CARPENTER SHOP		INTERIOR		WOOD STORAGE	3	Existing LED Fixture; No Retrofit	10	0.030	30	3	No Retrofit	10	0.030	30

©2013 Energy Systems Group, LLC

EXISTING FIXTURES											PROPOSED FIXTURE UPGRADE				
Park/Building Name	Building	Building #	Phase	Floor	Room Description	Qty	Description	Watts	kW	kWh	Qty	Description	Watts	kW	kWh
LAUREL HILL STATE PARK	CARPENTER SHOP		EXTERIOR		EXTERIOR	1	60 Watt Incandescent A-Lamp Jelly Jar Fixture	60	0.060	263	1	Re-Lamp with (1) 10 Watt LED A19	10	0.010	44
LAUREL HILL STATE PARK	CARPENTER SHOP		EXTERIOR		EXTERIOR	1	Existing LED Fixture; No Retrofit	40	0.040	175	1	No Retrofit	40	0.040	175
LAUREL HILL STATE PARK	MECHANIC SHOP		INTERIOR		VEHICLE BAY	11	Existing LED Fixture; No Retrofit	40	0.440	1,144	11	No Retrofit	40	0.440	1,144
LAUREL HILL STATE PARK	MECHANIC SHOP		INTERIOR		VEHICLE BAY	1	Existing LED Fixture; No Retrofit	20	0.020	52	1	No Retrofit	20	0.020	52
LAUREL HILL STATE PARK	MECHANIC SHOP		INTERIOR		SMALL BAY	2	Existing LED Fixture; No Retrofit	40	0.080	208	2	No Retrofit	40	0.080	208
LAUREL HILL STATE PARK	MECHANIC SHOP		INTERIOR		SMALL BAY	1	T12 1x4 2-Lamp Industrial Strip Fixture	72	0.072	187	1	Retrofit with (2) 12.5 Watt LED T8 4' Lamps; Direct Wire to Socket	25	0.025	65
LAUREL HILL STATE PARK	MECHANIC SHOP		INTERIOR		ATTIC	5	Existing LED Fixture; No Retrofit	10	0.050	50	5	No Retrofit	10	0.050	50
LAUREL HILL STATE PARK	MECHANIC SHOP		EXTERIOR		EXTERIOR	1	Existing LED Fixture; No Retrofit	40	0.040	175	1	No Retrofit	40	0.040	175
LAUREL HILL STATE PARK	PLUMBING SHOP		INTERIOR		SHOP	5	Existing LED Fixture; No Retrofit	40	0.200	520	5	No Retrofit	40	0.200	520
LAUREL HILL STATE PARK	PLUMBING SHOP		INTERIOR		PART STORAGE	6	Existing LED Fixture; No Retrofit	40	0.240	240	6	No Retrofit	40	0.240	240
LAUREL HILL STATE PARK	MANAGERS RESIDENCE #1		EXTERIOR		GARAGE EXTERIOR	3	13 Watt Compact Fluorescent Fixture	13	0.039	171	3	Re-Lamp with (1) 10 Watt LED A19	10	0.030	131
LAUREL HILL STATE PARK	MANAGERS RESIDENCE #1		EXTERIOR		GARAGE EXTERIOR	1	150 Watt Quartz Flood Fixture	150	0.150	657	1	New 26 Watt LED Flood Fixture	27	0.027	118
LAUREL HILL STATE PARK	MANAGERS RESIDENCE #1		INTERIOR		GARAGE	1	60 Watt Incandescent A-Lamp Fixture	60	0.060	222	1	Re-Lamp with (1) 10 Watt LED A19	10	0.010	37
LAUREL HILL STATE PARK	MANAGERS RESIDENCE #1		INTERIOR		GARAGE	1	60 Watt Incandescent A-Lamp Fixture	60	0.060	222	1	Re-Lamp with (1) 10 Watt LED A19	10	0.010	37
LAUREL HILL STATE PARK	MANAGERS RESIDENCE #1		EXTERIOR		HOUSE EXTERIOR	1	90 Watt Incandescent PAR38 2-Lamp Fixture	180	0.180	788	1	Re-Lamp with (2) 17 Watt LED PAR38	34	0.034	149
LAUREL HILL STATE PARK	MANAGERS RESIDENCE #1		EXTERIOR		HOUSE EXTERIOR	1	Existing LED Fixture; No Retrofit	40	0.040	175	1	No Retrofit	40	0.040	175
LAUREL HILL STATE PARK	MANAGERS RESIDENCE #1		EXTERIOR		HOUSE EXTERIOR	2	90 Watt Incandescent PAR38 Fixture	90	0.180	788	2	Re-Lamp with (1) 17 Watt LED PAR38	17	0.034	149
LAUREL HILL STATE PARK	MANAGERS RESIDENCE #1		EXTERIOR		HOUSE EXTERIOR	1	23 Watt Compact Fluorescent Fixture	23	0.023	101	1	Re-Lamp with (1) 10 Watt LED A19	10	0.010	44
LAUREL HILL STATE PARK	MANAGERS RESIDENCE #1		EXTERIOR		HOUSE EXTERIOR	1	Existing LED Fixture; No Retrofit	40	0.040	175	1	No Retrofit	40	0.040	175
LAUREL HILL STATE PARK	MANAGERS RESIDENCE #1		EXTERIOR		HOUSE EXTERIOR	2	60 Watt Incandescent A-Lamp Fixture	60	0.120	526	2	Re-Lamp with (1) 10 Watt LED A19	10	0.020	88
LAUREL HILL STATE PARK	MANAGERS RESIDENCE #1		EXTERIOR		HOUSE EXTERIOR	1	90 Watt Incandescent PAR38 2-Lamp Fixture	180	0.180	788	1	Re-Lamp with (2) 17 Watt LED PAR38	34	0.034	149
LAUREL HILL STATE PARK	MANAGERS RESIDENCE #1		INTERIOR		HALL	1	23 Watt Compact Fluorescent Fixture	23	0.023	85	1	Re-Lamp with (1) 10 Watt LED A19	10	0.010	37
LAUREL HILL STATE PARK	MANAGERS RESIDENCE #1		INTERIOR		FAMILY ROOM	1	Existing LED Fixture; No Retrofit	40	0.040	148	1	No Retrofit	40	0.040	148
LAUREL HILL STATE PARK	MANAGERS RESIDENCE #1		INTERIOR		BEDROOM	1	Existing LED Fixture; No Retrofit	10	0.010	37	1	No Retrofit	10	0.010	37
LAUREL HILL STATE PARK	MANAGERS RESIDENCE #1		INTERIOR		HALL	1	Existing LED Fixture; No Retrofit	10	0.010	37	1	No Retrofit	10	0.010	37
LAUREL HILL STATE PARK	MANAGERS RESIDENCE #1		INTERIOR		KITCHEN	7	Existing LED Fixture; No Retrofit	10	0.070	259	7	No Retrofit	10	0.070	259

©2013 Energy Systems Group, LLC

EXISTING FIXTURES											PROPOSED FIXTURE UPGRADE				
Park/Building Name	Building	Building #	Phase	Floor	Room Description	Qty	Description	Watts	kW	kWh	Qty	Description	Watts	kW	kWh
LAUREL HILL STATE PARK	MANAGERS RESIDENCE #1		INTERIOR		KITCHEN	6	Existing LED Fixture; No Retrofit	10	0.060	222	6	No Retrofit	10	0.060	222
LAUREL HILL STATE PARK	MANAGERS RESIDENCE #1		INTERIOR		MUD ROOM	1	Existing LED Fixture; No Retrofit	10	0.010	37	1	No Retrofit	10	0.010	37
LAUREL HILL STATE PARK	MANAGERS RESIDENCE #1		INTERIOR		RESTROOM	1	50 Watt Incandescent 5-Lamp Candelabra Fixture	250	0.250	926	1	Re-Lamp with (5) 5 Watt LED Candelabra	25	0.025	93
LAUREL HILL STATE PARK	MANAGERS RESIDENCE #1		INTERIOR		SHOWER	1	13 Watt Compact Fluorescent Fixture	13	0.013	48	1	Re-Lamp with (1) 10 Watt LED A19	10	0.010	37
LAUREL HILL STATE PARK	MANAGERS RESIDENCE #1		INTERIOR		BASEMENT HALL	1	T12 1x4 2-Lamp Wrap Fixture	72	0.072	267	1	Retrofit with (2) 12.5 Watt LED T8 4' Lamps; Direct Wire to Socket	25	0.025	93
LAUREL HILL STATE PARK	MANAGERS RESIDENCE #1		INTERIOR		FAMILY ROOM	3	Existing LED Fixture; No Retrofit	10	0.030	111	3	No Retrofit	10	0.030	111
LAUREL HILL STATE PARK	MANAGERS RESIDENCE #1		INTERIOR		LAUNDRY ROOM	1	Existing LED Fixture; No Retrofit	40	0.040	148	1	No Retrofit	40	0.040	148
LAUREL HILL STATE PARK	MANAGERS RESIDENCE #1		INTERIOR		LAUNDRY ROOM	1	Existing LED Fixture; No Retrofit	10	0.010	37	1	No Retrofit	10	0.010	37
LAUREL HILL STATE PARK	MANAGERS RESIDENCE #1		INTERIOR		WOOD ROOM	1	60 Watt Incandescent A-Lamp Fixture	60	0.060	222	1	Re-Lamp with (1) 10 Watt LED A19	10	0.010	37
LAUREL HILL STATE PARK	MANAGERS RESIDENCE #1		INTERIOR		UPPER STAIRS HALL	1	40 Watt Incandescent 4-Lamp Candelabra Fixture	160	0.160	593	1	Re-Lamp with (4) 5 Watt LED Candelabra	20	0.020	74
LAUREL HILL STATE PARK	MANAGERS RESIDENCE #1		INTERIOR		BEDROOM	1	13 Watt Compact Fluorescent 2-Lamp Fixture	26	0.026	96	1	Re-Lamp with (2) 10 Watt LED A19	20	0.020	74
LAUREL HILL STATE PARK	MANAGERS RESIDENCE #1		INTERIOR		BEDROOM	1	Existing LED Fixture; No Retrofit	10	0.010	37	1	No Retrofit	10	0.010	37
LAUREL HILL STATE PARK	MANAGERS RESIDENCE #1		INTERIOR		BEDROOM	1	Existing LED Fixture; No Retrofit	20	0.020	74	1	No Retrofit	20	0.020	74
LAUREL HILL STATE PARK	MANAGERS RESIDENCE #1		INTERIOR		CRAWL SPACE	1	60 Watt Incandescent A-Lamp Fixture	60	0.060	60	1	Re-Lamp with (1) 10 Watt LED A19	10	0.010	10
LAUREL HILL STATE PARK	MANAGERS RESIDENCE #1		INTERIOR		BEDROOM	1	Existing LED Fixture; No Retrofit	20	0.020	74	1	No Retrofit	20	0.020	74
LAUREL HILL STATE PARK	MANAGERS RESIDENCE #1		INTERIOR		CLOSET	1	60 Watt Incandescent A-Lamp Fixture	60	0.060	60	1	Re-Lamp with (1) 10 Watt LED A19	10	0.010	10
LAUREL HILL STATE PARK	MANAGERS RESIDENCE #1		INTERIOR		BATH	1	Existing LED Fixture; No Retrofit	10	0.010	37	1	No Retrofit	10	0.010	37
LAUREL HILL STATE PARK	MANAGERS RESIDENCE #1		INTERIOR		BATH	1	Existing LED Fixture; No Retrofit	30	0.030	111	1	No Retrofit	30	0.030	111
LAUREL HILL STATE PARK	MANAGERS RESIDENCE #1		INTERIOR		BEDROOM	1	Existing LED Fixture; No Retrofit	40	0.040	148	1	No Retrofit	40	0.040	148
LAUREL HILL STATE PARK	MANAGERS RESIDENCE #1		INTERIOR		CLOSET	1	Existing LED Fixture; No Retrofit	10	0.010	10	1	No Retrofit	10	0.010	10
LAUREL HILL STATE PARK	MANAGERS RESIDENCE #1		EXTERIOR		PLAYGROUND	2	70 Watt High Pressure Sodium Dusk to Dawn Fixture	90	0.180	788	2	New 26 Watt LED Dusk to Dawn Barnyard Fixture	26	0.052	228
LAUREL HILL STATE PARK	MANAGERS RESIDENCE #1		EXTERIOR		HILL	2	70 Watt High Pressure Sodium Dusk to Dawn Fixture	90	0.180	788	2	New 26 Watt LED Dusk to Dawn Barnyard Fixture	26	0.052	228
LAUREL HILL STATE PARK	MANAGERS RESIDENCE #1		EXTERIOR		HILL	1	70 Watt High Pressure Sodium Dusk to Dawn Fixture	90	0.090	394	1	New 26 Watt LED Dusk to Dawn Barnyard Fixture	26	0.026	114
LAUREL HILL STATE PARK	WELL HOUSE #3		INTERIOR		PUMP	1	Existing LED Fixture; No Retrofit	10	0.010	26	1	No Retrofit	10	0.010	26
LAUREL HILL STATE PARK	WELL HOUSE #4		INTERIOR		PUMP	1	60 Watt Incandescent Jelly Jar Fixture; Red	60	0.060	156	1	Re-Lamp with (1) 10 Watt LED A19	10	0.010	26
LAUREL HILL STATE PARK	QUARRY BUILDING-STORAGE		INTERIOR		BUY	7	T8 1x8 2-Lamp Strip Fixture with 59 Watt Lamps	109	0.763	1,985	7	Retrofit with (4) 12.5 Watt LED T8 4' Lamps and (1) 1x8 4-Lamp Strip Kit; Direct Wire to Socket	50	0.350	910

©2013 Energy Systems Group, LLC

EXISTING FIXTURES												PROPOSED FIXTURE UPGRADE				
Park/Building Name	Building	Building #	Phase	Floor	Room Description	Qty	Description	Watts	kW	kWh	Qty	Description	Watts	kW	kWh
LAUREL HILL STATE PARK	QUARRY BUILDING-STORAGE		EXTERIOR		EXTERIOR	2	70 Watt High Pressure Sodium Dusk to Dawn Fixture	90	0.180	788	2	New 26 Watt LED Dusk to Dawn Barnyard Fixture	26	0.052	228
LAUREL HILL STATE PARK	QUARRY BUILDING-STORAGE		EXTERIOR		EXTERIOR	3	70 Watt High Pressure Sodium Dusk to Dawn Fixture	90	0.270	1,183	3	New 26 Watt LED Dusk to Dawn Barnyard Fixture	26	0.078	342
LAUREL HILL STATE PARK	BROWN GARAGE		INTERIOR		BAY 1	10	T8 1x8 2-Lamp Strip Fixture with 59 Watt Lamps	109	1.090	2,835	10	Retrofit with (4) 12.5 Watt LED T8 4' Lamps and (1) 1x8 4-Lamp Strip Kit; Direct Wire to Socket	50	0.500	1,301
LAUREL HILL STATE PARK	BROWN GARAGE		INTERIOR		PAINT STORAGE	8	T8 1x8 2-Lamp Strip Fixture with 59 Watt Lamps	109	0.872	2,268	8	Retrofit with (4) 12.5 Watt LED T8 4' Lamps and (1) 1x8 4-Lamp Strip Kit; Direct Wire to Socket	50	0.400	1,040
LAUREL HILL STATE PARK	BROWN GARAGE		INTERIOR		CLOSET	1	T8 1x4 2-Lamp Wrap Fixture	62	0.062	62	1	Retrofit with (2) 12.5 Watt LED T8 4' Lamps; Direct Wire to Socket	25	0.025	25
LAUREL HILL STATE PARK	BROWN GARAGE		INTERIOR		FURNACE	1	60 Watt Incandescent A-Lamp Fixture	60	0.060	60	1	Re-Lamp with (1) 10 Watt LED A19	10	0.010	10
LAUREL HILL STATE PARK	BROWN GARAGE		INTERIOR		CLOSET	1	T12 1x4 2-Lamp Wrap Fixture	72	0.072	72	1	Retrofit with (2) 12.5 Watt LED T8 4' Lamps; Direct Wire to Socket	25	0.025	25
LAUREL HILL STATE PARK	BROWN GARAGE		EXTERIOR		EXTERIOR	1	70 Watt High Pressure Sodium Dusk to Dawn Fixture	90	0.090	394	1	New 26 Watt LED Dusk to Dawn Barnyard Fixture	26	0.026	114
LAUREL HILL STATE PARK	PICNIC #4 BATH HOUSE		EXTERIOR		EXTERIOR	2	Existing LED Fixture; No Retrofit	40	0.080	350	2	No Retrofit	40	0.080	350
LAUREL HILL STATE PARK	PICNIC #4 BATH HOUSE		INTERIOR		RESTROOM	2	Existing LED Fixture; No Retrofit	40	0.080	366	2	No Retrofit	40	0.080	366
LAUREL HILL STATE PARK	PICNIC #4 BATH HOUSE		INTERIOR		RESTROOM	2	Existing LED Fixture; No Retrofit	40	0.080	366	2	No Retrofit	40	0.080	366
LAUREL HILL STATE PARK	PICNIC #4 BATH HOUSE		INTERIOR		PIPE CHASE	3	Existing LED Fixture; No Retrofit	10	0.030	83	3	No Retrofit	10	0.030	83
LAUREL HILL STATE PARK	PICNIC #4 BATH HOUSE		EXTERIOR		POLE	2	Existing LED Fixture; No Retrofit	40	0.080	350	2	No Retrofit	40	0.080	350
LAUREL HILL STATE PARK	CAMP #2		INTERIOR		DINING HALL	1	Renovation; Area(s) Not Included in Scope/Pricing	0	0.000	0	1	No Retrofit	0	0.000	0
LAUREL HILL STATE PARK	CAMP #2		INTERIOR		HALL	12	T12 1x4 4-Lamp Wrap Fixture	144	1.728	6,401	12	Retrofit with (4) 12.5 Watt LED T8 4' Lamps; Direct Wire to Socket	50	0.600	2,222
LAUREL HILL STATE PARK	CAMP #2		INTERIOR		KITCHEN	9	100 Watt Incandescent A-Lamp Fixture	100	0.900	3,334	9	Re-Lamp with (1) 18 Watt LED A21	18	0.162	600
LAUREL HILL STATE PARK	CAMP #2		INTERIOR		HALLWAY	1	60 Watt Incandescent A-Lamp Fixture	60	0.060	222	1	Re-Lamp with (1) 10 Watt LED A19	10	0.010	37
LAUREL HILL STATE PARK	CAMP #2		INTERIOR		OLD COOLER	1	60 Watt Incandescent A-Lamp Fixture	60	0.060	222	1	Re-Lamp with (1) 10 Watt LED A19	10	0.010	37
LAUREL HILL STATE PARK	CAMP #2		INTERIOR		STORAGE	1	60 Watt Incandescent A-Lamp Fixture	60	0.060	222	1	Re-Lamp with (1) 10 Watt LED A19	10	0.010	37
LAUREL HILL STATE PARK	CAMP #2		EXTERIOR		EXTERIOR	1	23 Watt Compact Fluorescent 2-Lamp R30	46	0.046	201	1	Relamp with (2) 10 Watt LED BR30	20	0.020	88
LAUREL HILL STATE PARK	CAMP #2		EXTERIOR		EXTERIOR	1	60 Watt Incandescent A-Lamp Jelly Jar Fixture	60	0.060	263	1	Re-Lamp with (1) 10 Watt LED A19	10	0.010	44
LAUREL HILL STATE PARK	CAMP #2		EXTERIOR		EXTERIOR	1	60 Watt Incandescent A-Lamp; Damaged Keyless	60	0.060	263	1	New 12" Round 14 Watt LED Drum Fixture	14	0.014	61
LAUREL HILL STATE PARK	CABIN	28	INTERIOR		INTERIOR	3	60 Watt Incandescent A-Lamp Fixture	60	0.180	667	3	Re-Lamp with (1) 10 Watt LED A19	10	0.030	111
LAUREL HILL STATE PARK	CAMP 2 - REC HALL		INTERIOR		HALL	6	40 Watt Incandescent Candelabra Fixture	40	0.240	889	6	Re-Lamp with (1) 5 Watt LED Candelabra	5	0.030	111
LAUREL HILL STATE PARK	CAMP 2 - REC HALL		INTERIOR		HALL	2	60 Watt Incandescent A-Lamp Fixture	60	0.120	444	2	Re-Lamp with (1) 10 Watt LED A19	10	0.020	74
LAUREL HILL STATE PARK	CAMP 2 - REC HALL		INTERIOR		HALL	2	60 Watt Incandescent A-Lamp Jelly Jar Fixture	60	0.120	444	2	Re-Lamp with (1) 10 Watt LED A19	10	0.020	74

©2013 Energy Systems Group, LLC

EXISTING FIXTURES											PROPOSED FIXTURE UPGRADE				
Park/Building Name	Building	Building #	Phase	Floor	Room Description	Qty	Description	Watts	kW	kWh	Qty	Description	Watts	kW	kWh
LAUREL HILL STATE PARK	CAMP 2 - REC HALL		EXTERIOR		EXTERIOR	15	40 Watt Incandescent S14	40	0.600	2,628	15	Relamp with (1) 5 Watt LED S14	5	0.075	329
LAUREL HILL STATE PARK	CAMP 2 - REC HALL		EXTERIOR		EXTERIOR	15	40 Watt Incandescent S14	40	0.600	2,628	15	Relamp with (1) 5 Watt LED S14	5	0.075	329
LAUREL HILL STATE PARK	CAMP 2 - REC HALL		EXTERIOR		EXTERIOR	1	60 Watt Incandescent A-Lamp Jelly Jar Fixture	60	0.060	263	1	Re-Lamp with (1) 10 Watt LED A19	10	0.010	44
LAUREL HILL STATE PARK	CABIN	23	INTERIOR		INTERIOR	1	60 Watt Incandescent A-Lamp Fixture	60	0.060	222	1	Re-Lamp with (1) 10 Watt LED A19	10	0.010	37
LAUREL HILL STATE PARK	CABIN	24	INTERIOR		INTERIOR	2	60 Watt Incandescent A-Lamp Fixture	60	0.120	444	2	Re-Lamp with (1) 10 Watt LED A19	10	0.020	74
LAUREL HILL STATE PARK	CABIN	24	EXTERIOR		EXTERIOR	1	60 Watt A-Lamp; Par Holder	60	0.060	263	1	Re-Lamp with (1) 10 Watt LED PAR30	10	0.010	44
LAUREL HILL STATE PARK	CABIN	25	INTERIOR		CABIN	2	60 Watt Incandescent A-Lamp Fixture	60	0.120	444	2	Re-Lamp with (1) 10 Watt LED A19	10	0.020	74
LAUREL HILL STATE PARK	STORAGE	29	INTERIOR		STORAGE	1	60 Watt Incandescent A-Lamp Fixture	60	0.060	60	1	Re-Lamp with (1) 10 Watt LED A19	10	0.010	10
LAUREL HILL STATE PARK	STORAGE		INTERIOR		STORAGE	1	60 Watt Incandescent A-Lamp Fixture	60	0.060	60	1	Re-Lamp with (1) 10 Watt LED A19	10	0.010	10
LAUREL HILL STATE PARK	STORAGE		INTERIOR		STORAGE	1	60 Watt Incandescent A-Lamp Fixture	60	0.060	60	1	Re-Lamp with (1) 10 Watt LED A19	10	0.010	10
LAUREL HILL STATE PARK	CABIN	35	INTERIOR		LIVING	1	60 Watt Incandescent A-Lamp Fixture	60	0.060	222	1	Re-Lamp with (1) 10 Watt LED A19	10	0.010	37
LAUREL HILL STATE PARK	CABIN	35	INTERIOR		BEDROOM	1	60 Watt Incandescent A-Lamp Fixture	60	0.060	222	1	Re-Lamp with (1) 10 Watt LED A19	10	0.010	37
LAUREL HILL STATE PARK	CABIN	24	INTERIOR		BEDROOM	4	60 Watt Incandescent A-Lamp Fixture	60	0.240	889	4	Re-Lamp with (1) 10 Watt LED A19	10	0.040	148
LAUREL HILL STATE PARK	CABIN	24	INTERIOR		BEDROOM	3	60 Watt Incandescent A-Lamp Fixture	60	0.180	667	3	Re-Lamp with (1) 10 Watt LED A19	10	0.030	111
LAUREL HILL STATE PARK	CABIN	23	INTERIOR		BEDROOM	3	60 Watt Incandescent A-Lamp Fixture	60	0.180	667	3	Re-Lamp with (1) 10 Watt LED A19	10	0.030	111
LAUREL HILL STATE PARK	CAMP 2 - UNIT/SUGAR CAMP	73	EXTERIOR		EXTERIOR	2	13 Watt Compact Fluorescent Goose Neck Fixture	13	0.026	114	2	Re-Lamp with (1) 10 Watt LED A19	10	0.020	88
LAUREL HILL STATE PARK	CAMP 2 - UNIT/SUGAR CAMP	73	INTERIOR		INTERIOR	2	T12 1x4 4-Lamp Wrap Fixture	144	0.288	1,067	2	Retrofit with (4) 12.5 Watt LED T8 4' Lamps; Direct Wire to Socket	50	0.100	370
LAUREL HILL STATE PARK	CAMP 2 - UNIT/SUGAR CAMP	73	INTERIOR		BEDROOM	2	100 Watt Metal Halide Canopy Fixture	125	0.250	926	2	Re-Lamp with (1) 27 Watt LED Omni-Cob Lamp; Hardwire Ballast	27	0.054	200
LAUREL HILL STATE PARK	CAMP 2 - UNIT/SUGAR CAMP	73	EXTERIOR		PORCH	1	60 Watt Incandescent A-Lamp Fixture	60	0.060	263	1	Re-Lamp with (1) 10 Watt LED A19	10	0.010	44
LAUREL HILL STATE PARK	CABIN	72	INTERIOR		WOOD STOVE	1	60 Watt Incandescent A-Lamp Fixture	60	0.060	222	1	Re-Lamp with (1) 10 Watt LED A19	10	0.010	37
LAUREL HILL STATE PARK	CABIN	72	EXTERIOR		EXTERIOR	1	60 Watt Incandescent A-Lamp Fixture	60	0.060	263	1	Re-Lamp with (1) 10 Watt LED A19	10	0.010	44
LAUREL HILL STATE PARK	CABIN	71	INTERIOR		HOLDING TANK	1	60 Watt Incandescent A-Lamp Fixture	60	0.060	222	1	Re-Lamp with (1) 10 Watt LED A19	10	0.010	37
LAUREL HILL STATE PARK	CABIN	71	EXTERIOR		EXTERIOR	1	60 Watt Incandescent A-Lamp Fixture	60	0.060	263	1	Re-Lamp with (1) 10 Watt LED A19	10	0.010	44
LAUREL HILL STATE PARK	CABIN	70	INTERIOR		BEDROOM	1	60 Watt Incandescent A-Lamp Fixture	60	0.060	222	1	Re-Lamp with (1) 10 Watt LED A19	10	0.010	37
LAUREL HILL STATE PARK	CABIN	70	EXTERIOR		EXTERIOR	1	60 Watt Incandescent A-Lamp Fixture	60	0.060	263	1	Re-Lamp with (1) 10 Watt LED A19	10	0.010	44
LAUREL HILL STATE PARK	CABIN	69	INTERIOR		BEDROOM	1	60 Watt Incandescent A-Lamp Fixture	60	0.060	222	1	Re-Lamp with (1) 10 Watt LED A19	10	0.010	37

©2013 Energy Systems Group, LLC

EXISTING FIXTURES											PROPOSED FIXTURE UPGRADE				
Park/Building Name	Building	Building #	Phase	Floor	Room Description	Qty	Description	Watts	kW	kWh	Qty	Description	Watts	kW	kWh
LAUREL HILL STATE PARK	CABIN	69	EXTERIOR		EXTERIOR	1	60 Watt Incandescent A-Lamp Fixture	60	0.060	263	1	Re-Lamp with (1) 10 Watt LED A19	10	0.010	44
LAUREL HILL STATE PARK	RESTROOM	68	INTERIOR		RESTROOM	3	60 Watt Incandescent A-Lamp Fixture	60	0.180	667	3	Re-Lamp with (1) 10 Watt LED A19	10	0.030	111
LAUREL HILL STATE PARK	RESTROOM	68	EXTERIOR		EXTERIOR	1	60 Watt Incandescent A-Lamp Fixture	60	0.060	263	1	Re-Lamp with (1) 10 Watt LED A19	10	0.010	44
LAUREL HILL STATE PARK	CABIN	75	INTERIOR		BEDROOM	1	60 Watt Incandescent A-Lamp Fixture	60	0.060	222	1	Re-Lamp with (1) 10 Watt LED A19	10	0.010	37
LAUREL HILL STATE PARK	CABIN	75	EXTERIOR		EXTERIOR	1	60 Watt Incandescent A-Lamp Fixture	60	0.060	263	1	Re-Lamp with (1) 10 Watt LED A19	10	0.010	44
LAUREL HILL STATE PARK	CABIN	76	INTERIOR		BEDROOM	1	60 Watt Incandescent A-Lamp Fixture	60	0.060	222	1	Re-Lamp with (1) 10 Watt LED A19	10	0.010	37
LAUREL HILL STATE PARK	CABIN	76	EXTERIOR		EXTERIOR	1	60 Watt Incandescent A-Lamp Fixture	60	0.060	263	1	Re-Lamp with (1) 10 Watt LED A19	10	0.010	44
LAUREL HILL STATE PARK	CABIN	74	INTERIOR		BEDROOM	1	60 Watt Incandescent A-Lamp Fixture	60	0.060	222	1	Re-Lamp with (1) 10 Watt LED A19	10	0.010	37
LAUREL HILL STATE PARK	CABIN	74	EXTERIOR		EXTERIOR	1	60 Watt Incandescent A-Lamp Fixture	60	0.060	263	1	Re-Lamp with (1) 10 Watt LED A19	10	0.010	44
LAUREL HILL STATE PARK	CABIN	77	INTERIOR		BEDROOM	1	60 Watt Incandescent A-Lamp Fixture	60	0.060	222	1	Re-Lamp with (1) 10 Watt LED A19	10	0.010	37
LAUREL HILL STATE PARK	CABIN	77	EXTERIOR		EXTERIOR	1	60 Watt Incandescent A-Lamp Fixture	60	0.060	263	1	Re-Lamp with (1) 10 Watt LED A19	10	0.010	44
LAUREL HILL STATE PARK	GROUP CAMP 1 RESTROOM		INTERIOR		PIPE CHASE	4	T8 1x4 2-Lamp Vaportight Fixture	62	0.248	248	4	Retrofit with (2) 12.5 Watt LED T8 4' Lamps; Direct Wire to Socket	25	0.100	100
LAUREL HILL STATE PARK	GROUP CAMP 1 RESTROOM		INTERIOR		FAMILY RESTROOM	1	T8 1x4 2-Lamp Vanity Fixture	62	0.062	171	1	Retrofit with (2) 12.5 Watt LED T8 4' Lamps; Direct Wire to Socket	25	0.025	69
LAUREL HILL STATE PARK	GROUP CAMP 1 RESTROOM		INTERIOR		FAMILY RESTROOM	3	32 Watt Plug-In CFL 7" Downlight Fixture	35	0.105	290	3	No Retrofit	35	0.105	290
LAUREL HILL STATE PARK	GROUP CAMP 1 RESTROOM		INTERIOR		WOMENS RESTROOM	9	32 Watt Plug-In CFL 7" Downlight Fixture	35	0.315	869	9	No Retrofit	35	0.315	869
LAUREL HILL STATE PARK	GROUP CAMP 1 RESTROOM		INTERIOR		WOMENS RESTROOM SHOWER	4	32 Watt Plug-In CFL 7" Downlight Fixture	35	0.140	386	4	No Retrofit	35	0.140	386
LAUREL HILL STATE PARK	GROUP CAMP 1 RESTROOM		INTERIOR		WOMENS RESTROOM	2	T8 1x4 2-Lamp Vanity Fixture	62	0.124	342	2	Retrofit with (2) 12.5 Watt LED T8 4' Lamps; Direct Wire to Socket	25	0.050	138
LAUREL HILL STATE PARK	GROUP CAMP 1 RESTROOM		INTERIOR		WOMENS RESTROOM	4	T8 1x4 2-Lamp Vanity Fixture	62	0.248	684	4	Retrofit with (2) 12.5 Watt LED T8 4' Lamps; Direct Wire to Socket	25	0.100	276
LAUREL HILL STATE PARK	GROUP CAMP 1 RESTROOM		INTERIOR		LAUNDRY ROOM	2	T8 1x4 2-Lamp Vaportight Fixture	62	0.124	342	2	Retrofit with (2) 12.5 Watt LED T8 4' Lamps; Direct Wire to Socket	25	0.050	138
LAUREL HILL STATE PARK	GROUP CAMP 1 RESTROOM		INTERIOR		MENS RESTROOM	9	32 Watt Plug-In CFL 7" Downlight Fixture	35	0.315	869	9	No Retrofit	35	0.315	869
LAUREL HILL STATE PARK	GROUP CAMP 1 RESTROOM		INTERIOR		MENS RESTROOM	4	32 Watt Plug-In CFL 7" Downlight Fixture	35	0.140	386	4	No Retrofit	35	0.140	386
LAUREL HILL STATE PARK	GROUP CAMP 1 RESTROOM		INTERIOR		MENS RESTROOM	6	T8 1x4 2-Lamp Vanity Fixture	62	0.372	1,027	6	Retrofit with (2) 12.5 Watt LED T8 4' Lamps; Direct Wire to Socket	25	0.150	414
LAUREL HILL STATE PARK	GROUP CAMP 1 RESTROOM		EXTERIOR		EXTERIOR	5	70 Watt Metal Halide Wall Pack Fixture	94	0.470	2,059	5	New 24 Watt LED Wall Pack Fixture, Non-Dark Sky	25	0.125	548
LAUREL HILL STATE PARK	CABIN	197	INTERIOR		BEDROOM	3	60 Watt Incandescent A-Lamp Fixture	60	0.180	667	3	Re-Lamp with (1) 10 Watt LED A19	10	0.030	111
LAUREL HILL STATE PARK	CABIN	198	INTERIOR		BEDROOM	1	60 Watt Incandescent A-Lamp Fixture	60	0.060	222	1	Re-Lamp with (1) 10 Watt LED A19	10	0.010	37
LAUREL HILL STATE PARK	CABIN	198	INTERIOR		BEDROOM	2	60 Watt Incandescent A-Lamp Fixture	60	0.120	444	2	Re-Lamp with (1) 10 Watt LED A19	10	0.020	74

©2013 Energy Systems Group, LLC

EXISTING FIXTURES											PROPOSED FIXTURE UPGRADE				
Park/Building Name	Building	Building #	Phase	Floor	Room Description	Qty	Description	Watts	kW	kWh	Qty	Description	Watts	kW	kWh
LAUREL HILL STATE PARK	CABIN	198	EXTERIOR		EXTERIOR	1	60 Watt Incandescent A-Lamp Fixture	60	0.060	263	1	Re-Lamp with (1) 10 Watt LED A19	10	0.010	44
LAUREL HILL STATE PARK	DINING HALL	200	INTERIOR		KITCHEN	12	60 Watt Incandescent A-Lamp Fixture	60	0.720	1,987	12	Re-Lamp with (1) 10 Watt LED A19	10	0.120	331
LAUREL HILL STATE PARK	DINING HALL	200	INTERIOR		KITCHEN HOOD	2	13 Watt Compact Fluorescent Fixture	13	0.026	72	2	Re-Lamp with (1) 10 Watt LED A19	10	0.020	55
LAUREL HILL STATE PARK	DINING HALL	200	INTERIOR		STROAGE	3	T8 1x4 2-Lamp Industrial Strip Fixture	62	0.186	513	3	Retrofit with (2) 12.5 Watt LED T8 4' Lamps; Direct Wire to Socket	25	0.075	207
LAUREL HILL STATE PARK	DINING HALL	200	INTERIOR		STORAGE	4	60 Watt Incandescent A-Lamp Fixture	60	0.240	662	4	Re-Lamp with (1) 10 Watt LED A19	10	0.040	110
LAUREL HILL STATE PARK	DINING HALL	200	INTERIOR		DINING HALL	7	60 Watt Incandescent 2-Lamp Fixture	120	0.840	2,318	7	Re-Lamp with (2) 10 Watt LED A19	20	0.140	386
LAUREL HILL STATE PARK	DINING HALL	200	EXTERIOR		EXTERIOR	1	Existing LED Fixture; No Retrofit	20	0.020	88	1	No Retrofit	20	0.020	88
LAUREL HILL STATE PARK	DINING HALL	200	EXTERIOR		EXTERIOR	2	90 Watt Incandescent PAR38 Fixture	90	0.180	788	2	Re-Lamp with (1) 17 Watt LED PAR38	17	0.034	149
LAUREL HILL STATE PARK	DINING HALL	200	EXTERIOR		EXTERIOR	1	60 Watt Incandescent A-Lamp Fixture	60	0.060	263	1	Re-Lamp with (1) 10 Watt LED A19	10	0.010	44
LAUREL HILL STATE PARK	DINING HALL	200	EXTERIOR		EXTERIOR	2	90 Watt Incandescent 3-Lamp PAR38 Fixture	270	0.540	2,365	2	Relamp with (3) 17 Watt LED PAR38	51	0.102	447
LAUREL HILL STATE PARK	CABIN	201	INTERIOR		BEDROOM	2	60 Watt Incandescent A-Lamp Fixture	60	0.120	444	2	Re-Lamp with (1) 10 Watt LED A19	10	0.020	74
LAUREL HILL STATE PARK	CABIN	201	EXTERIOR		EXTERIOR	1	60 Watt Incandescent A-Lamp Fixture	60	0.060	263	1	Re-Lamp with (1) 10 Watt LED A19	10	0.010	44
LAUREL HILL STATE PARK	CABIN	225	INTERIOR		BEDROOM	2	60 Watt Incandescent A-Lamp Fixture	60	0.120	444	2	Re-Lamp with (1) 10 Watt LED A19	10	0.020	74
LAUREL HILL STATE PARK	CABIN	225	EXTERIOR		EXTERIOR	1	60 Watt Incandescent A-Lamp Fixture	60	0.060	263	1	Re-Lamp with (1) 10 Watt LED A19	10	0.010	44
LAUREL HILL STATE PARK	CABIN	224	INTERIOR		BEDROOM	2	60 Watt Incandescent A-Lamp Fixture	60	0.120	444	2	Re-Lamp with (1) 10 Watt LED A19	10	0.020	74
LAUREL HILL STATE PARK	CABIN	224	EXTERIOR		EXTERIOR	1	60 Watt Incandescent A-Lamp Fixture	60	0.060	263	1	Re-Lamp with (1) 10 Watt LED A19	10	0.010	44
LAUREL HILL STATE PARK	REC HALL	202	INTERIOR		HALL	12	T12 1x8 2-Lamp Industrial Strip Fixture; Difficult Access	123	1.476	4,074	12	Retrofit with (4) 12.5 Watt LED T8 4' Lamps and (1) 1x8 4-Lamp Industrial Strip Kit; Direct Wire to Socket; Difficult Access	50	0.600	1,656
LAUREL HILL STATE PARK	REC HALL	202	INTERIOR		STORAGE	4	T12 1x4 2-Lamp Industrial Strip Fixture	72	0.288	795	4	Retrofit with (2) 12.5 Watt LED T8 4' Lamps; Direct Wire to Socket	25	0.100	276
LAUREL HILL STATE PARK	REC HALL	202	EXTERIOR		EXTERIOR	2	90 Watt Incandescent PAR38 2-Lamp Fixture	180	0.360	1,577	2	Re-Lamp with (2) 17 Watt LED PAR38	34	0.068	298
LAUREL HILL STATE PARK	REC HALL	202	EXTERIOR		EXTERIOR	1	90 Watt Incandescent 3-Lamp PAR38 Fixture	270	0.270	1,183	1	Relamp with (3) 17 Watt LED PAR38	51	0.051	223
LAUREL HILL STATE PARK	CABIN	222	INTERIOR		BEDROOM	2	60 Watt Incandescent A-Lamp Fixture	60	0.120	444	2	Re-Lamp with (1) 10 Watt LED A19	10	0.020	74
LAUREL HILL STATE PARK	CABIN	222	EXTERIOR		EXTERIOR	1	60 Watt Incandescent A-Lamp Fixture	60	0.060	263	1	Re-Lamp with (1) 10 Watt LED A19	10	0.010	44
LAUREL HILL STATE PARK	CABIN	221	INTERIOR		BEDROOM	2	60 Watt Incandescent A-Lamp Fixture	60	0.120	444	2	Re-Lamp with (1) 10 Watt LED A19	10	0.020	74
LAUREL HILL STATE PARK	CABIN	221	EXTERIOR		EXTERIOR	1	60 Watt Incandescent A-Lamp Fixture	60	0.060	263	1	Re-Lamp with (1) 10 Watt LED A19	10	0.010	44
LAUREL HILL STATE PARK	CABIN	226	INTERIOR		BEDROOM	2	60 Watt Incandescent A-Lamp Fixture	60	0.120	444	2	Re-Lamp with (1) 10 Watt LED A19	10	0.020	74
LAUREL HILL STATE PARK	CABIN	226	EXTERIOR		EXTERIOR	1	60 Watt Incandescent A-Lamp Fixture	60	0.060	263	1	Re-Lamp with (1) 10 Watt LED A19	10	0.010	44

©2013 Energy Systems Group, LLC

EXISTING FIXTURES												PROPOSED FIXTURE UPGRADE				
Park/Building Name	Building	Building #	Phase	Floor	Room Description	Qty	Description	Watts	kW	kWh	Qty	Description	Watts	kW	kWh
LAUREL HILL STATE PARK	CABIN		INTERIOR		BEDROOM	2	60 Watt Incandescent A-Lamp Fixture	60	0.120	444	2	Re-Lamp with (1) 10 Watt LED A19	10	0.020	74
LAUREL HILL STATE PARK	CABIN		EXTERIOR		EXTERIOR	1	60 Watt Incandescent A-Lamp Fixture	60	0.060	263	1	Re-Lamp with (1) 10 Watt LED A19	10	0.010	44
LAUREL HILL STATE PARK	CABIN	210	INTERIOR		BEDROOM	2	60 Watt Incandescent A-Lamp Fixture	60	0.120	444	2	Re-Lamp with (1) 10 Watt LED A19	10	0.020	74
LAUREL HILL STATE PARK	CABIN	210	EXTERIOR		EXTERIOR	1	60 Watt Incandescent A-Lamp Fixture	60	0.060	263	1	Re-Lamp with (1) 10 Watt LED A19	10	0.010	44
LAUREL HILL STATE PARK	CABIN	219	INTERIOR		BEDROOM	2	60 Watt Incandescent A-Lamp Fixture	60	0.120	444	2	Re-Lamp with (1) 10 Watt LED A19	10	0.020	74
LAUREL HILL STATE PARK	CABIN	219	EXTERIOR		EXTERIOR	1	60 Watt Incandescent A-Lamp Fixture	60	0.060	263	1	Re-Lamp with (1) 10 Watt LED A19	10	0.010	44
LAUREL HILL STATE PARK	CABIN	211	INTERIOR		BEDROOM	1	T12 1x8 2-Lamp Industrial Strip Fixture with 75 Watt Lamps	158	0.158	585	1	Retrofit with (4) 12.5 Watt LED T8 4' Lamps and (1) 1x8 4-Lamp Industrial Strip Kit, Direct Wire to Socket	50	0.050	185
LAUREL HILL STATE PARK	CABIN	211	EXTERIOR		EXTERIOR	1	60 Watt Incandescent A-Lamp Fixture	60	0.060	263	1	Re-Lamp with (1) 10 Watt LED A19	10	0.010	44
LAUREL HILL STATE PARK	CABIN	212	INTERIOR		BEDROOM	1	60 Watt Incandescent A-Lamp Fixture	60	0.060	222	1	Re-Lamp with (1) 10 Watt LED A19	10	0.010	37
LAUREL HILL STATE PARK	CABIN	212	EXTERIOR		EXTERIOR	1	60 Watt Incandescent A-Lamp Fixture	60	0.060	263	1	Re-Lamp with (1) 10 Watt LED A19	10	0.010	44
LAUREL HILL STATE PARK	CABIN	218	INTERIOR		BEDROOM	2	60 Watt Incandescent A-Lamp Fixture	60	0.120	444	2	Re-Lamp with (1) 10 Watt LED A19	10	0.020	74
LAUREL HILL STATE PARK	CABIN	218	EXTERIOR		EXTERIOR	1	60 Watt Incandescent A-Lamp Fixture	60	0.060	263	1	Re-Lamp with (1) 10 Watt LED A19	10	0.010	44
LAUREL HILL STATE PARK	CABIN	217	INTERIOR		BEDROOM	2	60 Watt Incandescent A-Lamp Fixture	60	0.120	444	2	Re-Lamp with (1) 10 Watt LED A19	10	0.020	74
LAUREL HILL STATE PARK	CABIN	217	EXTERIOR		EXTERIOR	1	60 Watt Incandescent A-Lamp Fixture	60	0.060	263	1	Re-Lamp with (1) 10 Watt LED A19	10	0.010	44
LAUREL HILL STATE PARK	CABIN	216	INTERIOR		BEDROOM	2	60 Watt Incandescent A-Lamp Fixture	60	0.120	444	2	Re-Lamp with (1) 10 Watt LED A19	10	0.020	74
LAUREL HILL STATE PARK	CABIN	216	EXTERIOR		EXTERIOR	1	60 Watt Incandescent A-Lamp Fixture	60	0.060	263	1	Re-Lamp with (1) 10 Watt LED A19	10	0.010	44
LAUREL HILL STATE PARK	CABIN	213	INTERIOR		BEDROOM	1	60 Watt Incandescent A-Lamp Fixture	60	0.060	222	1	Re-Lamp with (1) 10 Watt LED A19	10	0.010	37
LAUREL HILL STATE PARK	CABIN	213	EXTERIOR		EXTERIOR	1	60 Watt Incandescent A-Lamp Fixture	60	0.060	263	1	Re-Lamp with (1) 10 Watt LED A19	10	0.010	44
LAUREL HILL STATE PARK	CABIN	215	INTERIOR		BEDROOM	2	60 Watt Incandescent A-Lamp Fixture	60	0.120	444	2	Re-Lamp with (1) 10 Watt LED A19	10	0.020	74
LAUREL HILL STATE PARK	CABIN	215	EXTERIOR		EXTERIOR	1	60 Watt Incandescent A-Lamp Fixture	60	0.060	263	1	Re-Lamp with (1) 10 Watt LED A19	10	0.010	44
LAUREL HILL STATE PARK	CABIN	223	INTERIOR		BEDROOM	1	60 Watt Incandescent A-Lamp Fixture	60	0.060	222	1	Re-Lamp with (1) 10 Watt LED A19	10	0.010	37
LAUREL HILL STATE PARK	CABIN	223	EXTERIOR		EXTERIOR	1	60 Watt Incandescent A-Lamp Fixture	60	0.060	263	1	Re-Lamp with (1) 10 Watt LED A19	10	0.010	44
LAUREL HILL STATE PARK	CABIN	227	INTERIOR		BEDROOM	1	60 Watt Incandescent A-Lamp Fixture	60	0.060	222	1	Re-Lamp with (1) 10 Watt LED A19	10	0.010	37
LAUREL HILL STATE PARK	CABIN	227	EXTERIOR		EXTERIOR	1	60 Watt Incandescent A-Lamp Fixture	60	0.060	263	1	Re-Lamp with (1) 10 Watt LED A19	10	0.010	44
LAUREL HILL STATE PARK	CABIN	208	INTERIOR		BEDROOM	1	60 Watt Incandescent A-Lamp Fixture	60	0.060	222	1	Re-Lamp with (1) 10 Watt LED A19	10	0.010	37
LAUREL HILL STATE PARK	CABIN	208	EXTERIOR		EXTERIOR	1	60 Watt Incandescent A-Lamp Fixture	60	0.060	263	1	Re-Lamp with (1) 10 Watt LED A19	10	0.010	44

©2013 Energy Systems Group, LLC

EXISTING FIXTURES												PROPOSED FIXTURE UPGRADE			
Park/Building Name	Building	Building #	Phase	Floor	Room Description	Qty	Description	Watts	kW	kWh	Qty	Description	Watts	kW	kWh
LAUREL HILL STATE PARK	CABIN	209	INTERIOR		BEDROOM	2	T12 1x8 2-Lamp Industrial Strip Fixture with 75 Watt Lamps	158	0.316	1,170	2	Retrofit with (4) 12.5 Watt LED T8 4' Lamps and (1) 1x8 4-Lamp Industrial Strip Kit; Direct Wire to Socket	50	0.100	370
LAUREL HILL STATE PARK	CABIN	209	INTERIOR		BEDROOM	4	60 Watt Incandescent A-Lamp Fixture	60	0.240	889	4	Re-Lamp with (1) 10 Watt LED A19	10	0.040	148
LAUREL HILL STATE PARK	CABIN	209	EXTERIOR		EXTERIOR	1	60 Watt Incandescent A-Lamp Fixture	60	0.060	263	1	Re-Lamp with (1) 10 Watt LED A19	10	0.010	44
LAUREL HILL STATE PARK	CABIN	204	INTERIOR		BEDROOM	7	60 Watt Incandescent A-Lamp Fixture	60	0.420	1,556	7	Re-Lamp with (1) 10 Watt LED A19	10	0.070	259
LAUREL HILL STATE PARK	CABIN	204	EXTERIOR		EXTERIOR	1	60 Watt Incandescent A-Lamp Fixture	60	0.060	263	1	Re-Lamp with (1) 10 Watt LED A19	10	0.010	44
LAUREL HILL STATE PARK	CABIN	205	INTERIOR		BEDROOM	1	60 Watt Incandescent A-Lamp Fixture	60	0.060	222	1	Re-Lamp with (1) 10 Watt LED A19	10	0.010	37
LAUREL HILL STATE PARK	CABIN	206	INTERIOR		BEDROOM	1	60 Watt Incandescent A-Lamp Fixture	60	0.060	222	1	Re-Lamp with (1) 10 Watt LED A19	10	0.010	37
LAUREL HILL STATE PARK	CABIN	207	INTERIOR		KITCHEN	1	60 Watt Incandescent A-Lamp Fixture	60	0.060	222	1	Re-Lamp with (1) 10 Watt LED A19	10	0.010	37
LAUREL HILL STATE PARK	CABIN	207	INTERIOR		CLOSET	1	60 Watt Incandescent A-Lamp Fixture	60	0.060	222	1	Re-Lamp with (1) 10 Watt LED A19	10	0.010	37
LAUREL HILL STATE PARK	CABIN	207	INTERIOR		BEDROOM	1	60 Watt Incandescent A-Lamp Fixture	60	0.060	222	1	Re-Lamp with (1) 10 Watt LED A19	10	0.010	37
LAUREL HILL STATE PARK	CABIN	208	INTERIOR		HALL	4	60 Watt Incandescent A-Lamp Fixture	60	0.240	889	4	Re-Lamp with (1) 10 Watt LED A19	10	0.040	148
LAUREL HILL STATE PARK	CABIN	209	INTERIOR		RESTROOM	1	60 Watt Incandescent A-Lamp Fixture	60	0.060	222	1	Re-Lamp with (1) 10 Watt LED A19	10	0.010	37
LAUREL HILL STATE PARK	CABIN	210	INTERIOR		BEDROOM	1	60 Watt Incandescent A-Lamp Fixture	60	0.060	222	1	Re-Lamp with (1) 10 Watt LED A19	10	0.010	37
LAUREL HILL STATE PARK	CABIN	211	INTERIOR		BEDROOM	1	T12 1x4 2-Lamp Wrap Fixture; Damaged	72	0.072	267	1	New 1x4 2-Lamp Wrap Fixture with (2) 12.5 Watt LED T8 4' Lamp; Direct Wire to Socket	25	0.025	93
LAUREL HILL STATE PARK	CABIN	212	INTERIOR		BEDROOM	1	60 Watt Incandescent A-Lamp Fixture	60	0.060	222	1	Re-Lamp with (1) 10 Watt LED A19	10	0.010	37
LAUREL HILL STATE PARK	CABIN	231	INTERIOR		BEDROOM	1	T12 1x4 2-Lamp Wrap Fixture; Damaged	72	0.072	267	1	New 1x4 2-Lamp Wrap Fixture with (2) 12.5 Watt LED T8 4' Lamp; Direct Wire to Socket	25	0.025	93
LAUREL HILL STATE PARK	CABIN	214	INTERIOR		BEDROOM	1	T12 1x4 2-Lamp Wrap Fixture; Damaged	72	0.072	267	1	New 1x4 2-Lamp Wrap Fixture with (2) 12.5 Watt LED T8 4' Lamp; Direct Wire to Socket	25	0.025	93
LAUREL HILL STATE PARK	CABIN	215	INTERIOR		EXTERIOR	1	90 Watt Incandescent PAR38 2-Lamp Fixture	180	0.180	788	1	Re-Lamp with (2) 17 Watt LED PAR38	34	0.034	149
LAUREL HILL STATE PARK	CABIN	216	EXTERIOR		EXTERIOR	1	90 Watt Incandescent PAR38 Fixture	90	0.090	394	1	Re-Lamp with (1) 17 Watt LED PAR38	17	0.017	74
LAUREL HILL STATE PARK	CAMP #1		EXTERIOR		POLES	2	70 Watt Metal Halide Dusk to Dawn Fixture	94	0.188	823	2	New 26 Watt LED Dusk to Dawn Barnyard Fixture	26	0.052	228
LAUREL HILL STATE PARK	CAMP 8 - DINING HALL	87	INTERIOR		DINING	4	Existing LED Fixture; No Retrofit	10	0.040	110	4	No Retrofit	10	0.040	110
LAUREL HILL STATE PARK	CAMP 8 - DINING HALL	87	INTERIOR		DINING	6	13 Watt Compact Fluorescent Fixture	13	0.078	215	6	Re-Lamp with (1) 10 Watt LED A19	10	0.060	166
LAUREL HILL STATE PARK	CAMP 8 - DINING HALL	87	INTERIOR		KITCHEN	12	T12 1x4 2-Lamp Wrap Fixture	72	0.864	2,385	12	Retrofit with (2) 12.5 Watt LED T8 4' Lamps; Direct Wire to Socket	25	0.300	828
LAUREL HILL STATE PARK	CAMP 8 - DINING HALL	87	INTERIOR		KITCHEN HOOD	1	13 Watt Compact Fluorescent Fixture	13	0.013	36	1	Re-Lamp with (1) 10 Watt LED A19	10	0.010	28
LAUREL HILL STATE PARK	CAMP 8 - DINING HALL	87	INTERIOR		STORAGE	4	23 Watt Compact Fluorescent Fixture	23	0.092	254	4	Re-Lamp with (1) 10 Watt LED A19	10	0.040	110
LAUREL HILL STATE PARK	CAMP 8 - DINING HALL	87	EXTERIOR		EXTERIOR	1	23 Watt Compact Fluorescent Fixture	23	0.023	101	1	Re-Lamp with (1) 10 Watt LED A19	10	0.010	44

©2013 Energy Systems Group, LLC

EXISTING FIXTURES											PROPOSED FIXTURE UPGRADE				
Park/Building Name	Building	Building #	Phase	Floor	Room Description	Qty	Description	Watts	kW	kWh	Qty	Description	Watts	kW	kWh
LAUREL HILL STATE PARK	CAMP 8 - DINING HALL	87	EXTERIOR		EXTERIOR	1	70 Watt High Pressure Sodium Dusk to Dawn Fixture	90	0.090	394	1	New 26 Watt LED Dusk to Dawn Barnyard Fixture	26	0.026	114
LAUREL HILL STATE PARK	CAMP 8 - DINING HALL	87	EXTERIOR		EXTERIOR	1	60 Watt Incandescent A-Lamp Goose Neck Fixture	60	0.060	263	1	Re-Lamp with (1) 10 Watt LED A19	10	0.010	44
LAUREL HILL STATE PARK	CAMP 8 - REC HALL		INTERIOR		REC HALL	1	13 Watt Compact Fluorescent Fixture	13	0.013	36	1	Re-Lamp with (1) 10 Watt LED A19	10	0.010	28
LAUREL HILL STATE PARK	CAMP 8 - REC HALL		INTERIOR		REC HALL	9	Existing LED Fixture; No Retrofit	10	0.090	248	9	No Retrofit	10	0.090	248
LAUREL HILL STATE PARK	CAMP 8 - REC HALL		INTERIOR		STORAGE	1	60 Watt Incandescent A-Lamp Fixture	60	0.060	166	1	Re-Lamp with (1) 10 Watt LED A19	10	0.010	28
LAUREL HILL STATE PARK	CAMP 8 - REC HALL		EXTERIOR		EXTERIOR	2	60 Watt A-Lamp; Par Holder	60	0.120	526	2	Re-Lamp with (1) 10 Watt LED PAR30	10	0.020	88
LAUREL HILL STATE PARK	CAMP 8 - REC HALL		EXTERIOR		EXTERIOR	1	60 Watt Incandescent A-Lamp Jelly Jar Fixture	60	0.060	263	1	Re-Lamp with (1) 10 Watt LED A19	10	0.010	44
LAUREL HILL STATE PARK	CAMP 8 - REC HALL		EXTERIOR		EXTERIOR	1	Existing LED Fixture; No Retrofit	40	0.040	175	1	No Retrofit	40	0.040	175
LAUREL HILL STATE PARK	INFIRMARY	83	INTERIOR		STORAGE 1	2	60 Watt Incandescent A-Lamp Fixture	60	0.120	312	2	Re-Lamp with (1) 10 Watt LED A19	10	0.020	52
LAUREL HILL STATE PARK	INFIRMARY	83	INTERIOR		STORAGE 2	2	T8 1x4 2-Lamp Industrial Strip Fixture	62	0.124	323	2	Retrofit with (2) 12.5 Watt LED T8 4' Lamps; Direct Wire to Socket	25	0.050	130
LAUREL HILL STATE PARK	INFIRMARY	83	INTERIOR		STORAGE 2	2	60 Watt Incandescent A-Lamp Fixture	60	0.120	312	2	Re-Lamp with (1) 10 Watt LED A19	10	0.020	52
LAUREL HILL STATE PARK	INFIRMARY	83	INTERIOR		BEDROOM	5	60 Watt Incandescent A-Lamp Fixture	60	0.300	780	5	Re-Lamp with (1) 10 Watt LED A19	10	0.050	130
LAUREL HILL STATE PARK	INFIRMARY	83	INTERIOR		BEDROOM	1	23 Watt Compact Fluorescent Fixture	23	0.023	60	1	Re-Lamp with (1) 10 Watt LED A19	10	0.010	26
LAUREL HILL STATE PARK	INFIRMARY	83	INTERIOR		RESTROOM	1	60 Watt Incandescent A-Lamp Fixture	60	0.060	156	1	Re-Lamp with (1) 10 Watt LED A19	10	0.010	26
LAUREL HILL STATE PARK	CABIN	84	INTERIOR		BEDROOM	6	60 Watt Incandescent A-Lamp Fixture	60	0.360	1,333	6	Re-Lamp with (1) 10 Watt LED A19	10	0.060	222
LAUREL HILL STATE PARK	CABIN	86	INTERIOR		BEDROOM	2	13 Watt Compact Fluorescent Fixture	13	0.026	96	2	Re-Lamp with (1) 10 Watt LED A19	10	0.020	74
LAUREL HILL STATE PARK	CABIN	86	INTERIOR		BEDROOM	3	60 Watt Incandescent A-Lamp Fixture	60	0.180	667	3	Re-Lamp with (1) 10 Watt LED A19	10	0.030	111
LAUREL HILL STATE PARK	CABIN	86	INTERIOR		DINING	1	60 Watt Incandescent A-Lamp Fixture	60	0.060	222	1	Re-Lamp with (1) 10 Watt LED A19	10	0.010	37
LAUREL HILL STATE PARK	CABIN	86	INTERIOR		BEDROOM	2	23 Watt Compact Fluorescent Fixture	23	0.046	170	2	Re-Lamp with (1) 10 Watt LED A19	10	0.020	74
LAUREL HILL STATE PARK	CABIN	89	INTERIOR		BEDROOM	5	60 Watt Incandescent A-Lamp Fixture	60	0.300	1,111	5	Re-Lamp with (1) 10 Watt LED A19	10	0.050	185
LAUREL HILL STATE PARK	CABIN	91	INTERIOR		BEDROOM	4	60 Watt Incandescent A-Lamp Fixture	60	0.240	889	4	Re-Lamp with (1) 10 Watt LED A19	10	0.040	148
LAUREL HILL STATE PARK	CABIN	91	INTERIOR		BEDROOM	1	23 Watt Compact Fluorescent Fixture	23	0.023	85	1	Re-Lamp with (1) 10 Watt LED A19	10	0.010	37
LAUREL HILL STATE PARK	CABIN	92	INTERIOR		BEDROOM	5	60 Watt Incandescent A-Lamp Fixture	60	0.300	1,111	5	Re-Lamp with (1) 10 Watt LED A19	10	0.050	185
LAUREL HILL STATE PARK	CABIN	96	INTERIOR		BEDROOM	5	60 Watt Incandescent A-Lamp Fixture	60	0.300	1,111	5	Re-Lamp with (1) 10 Watt LED A19	10	0.050	185
LAUREL HILL STATE PARK	CABIN	95	INTERIOR		BEDROOM	5	60 Watt Incandescent A-Lamp Fixture	60	0.300	1,111	5	Re-Lamp with (1) 10 Watt LED A19	10	0.050	185
LAUREL HILL STATE PARK	CABIN	93	INTERIOR		BEDROOM	5	60 Watt Incandescent A-Lamp Fixture	60	0.300	1,111	5	Re-Lamp with (1) 10 Watt LED A19	10	0.050	185

©2013 Energy Systems Group, LLC

EXISTING FIXTURES											PROPOSED FIXTURE UPGRADE				
Park/Building Name	Building	Building #	Phase	Floor	Room Description	Qty	Description	Watts	kW	kWh	Qty	Description	Watts	kW	kWh
LAUREL HILL STATE PARK	CAMP 8 RR-BATH	290	INTERIOR		WOMENS RESTROOM	6	T12 1x4 2-Lamp V aportight Fixture	72	0.432	1,979	6	Retrofit with (2) 12.5 Watt LED T8 4' Lamps; Direct Wire to Socket	25	0.150	687
LAUREL HILL STATE PARK	CAMP 8 RR-BATH	290	INTERIOR		WOMENS RESTROOM	3	T12 1x4 2-Lamp V aportight Fixture	72	0.216	989	3	Retrofit with (2) 12.5 Watt LED T8 4' Lamps; Direct Wire to Socket	25	0.075	344
LAUREL HILL STATE PARK	CAMP 8 RR-BATH	290	INTERIOR		MENS RESTROOM	3	T12 1x4 2-Lamp V aportight Fixture	72	0.216	989	3	Retrofit with (2) 12.5 Watt LED T8 4' Lamps; Direct Wire to Socket	25	0.075	344
LAUREL HILL STATE PARK	CAMP 8 RR-BATH	290	INTERIOR		MENS RESTROOM	6	T12 1x4 2-Lamp V aportight Fixture	72	0.432	1,979	6	Retrofit with (2) 12.5 Watt LED T8 4' Lamps; Direct Wire to Socket	25	0.150	687
LAUREL HILL STATE PARK	CAMP 8 RR-BATH	290	INTERIOR		MECHANICAL	2	T12 1x4 2-Lamp V aportight Fixture	72	0.144	397	2	Retrofit with (2) 12.5 Watt LED T8 4' Lamps; Direct Wire to Socket	25	0.050	138
LAUREL HILL STATE PARK	CAMP 8 RR-BATH	290	EXTERIOR		EXTERIOR	2	70 Watt High Pressure Sodium Wall Pack Fixture	90	0.180	788	2	New 24 Watt LED Wall Pack Fixture; Non-Dark Sky	25	0.050	219
LAUREL HILL STATE PARK	CAMP 8 RR-BATH	290	EXTERIOR		EXTERIOR	2	T8 1x4 2-Lamp V aportight Fixture	62	0.124	543	2	Retrofit with (2) 12.5 Watt LED T8 4' Lamps; Direct Wire to Socket	25	0.050	219
LAUREL HILL STATE PARK	CAMP 8 RR-BATH	290	EXTERIOR		EXTERIOR	1	70 Watt High Pressure Sodium Dusk to Dawn Fixture	90	0.090	394	1	New 26 Watt LED Dusk to Dawn Barnyard Fixture	26	0.026	114
LAUREL HILL STATE PARK	WELL HOUSE 3	3	INTERIOR		PUMP	1	Existing LED Fixture; No Retrofit	10	0.010	26	1	No Retrofit	10	0.010	26
LAUREL HILL STATE PARK	STAFF LODGE	152	INTERIOR		LIVING ROOM	2	60 Watt Incandescent A-Lamp Fixture	60	0.120	270	2	Re-Lamp with (1) 10 Watt LED A19	10	0.020	45
LAUREL HILL STATE PARK	STAFF LODGE	152	INTERIOR		BED ROOM 1-4	5	60 Watt Incandescent A-Lamp Fixture	60	0.300	674	5	Re-Lamp with (1) 10 Watt LED A19	10	0.050	112
LAUREL HILL STATE PARK	STAFF LODGE	152	INTERIOR		HALL	1	60 Watt Incandescent A-Lamp Fixture	60	0.060	135	1	Re-Lamp with (1) 10 Watt LED A19	10	0.010	22
LAUREL HILL STATE PARK	STAFF LODGE	152	INTERIOR		DEBROOM 5-8	4	60 Watt Incandescent A-Lamp Fixture	60	0.240	540	4	Re-Lamp with (1) 10 Watt LED A19	10	0.040	90
LAUREL HILL STATE PARK	REC HALL	153	INTERIOR		REC HALL	10	60 Watt Incandescent A-Lamp Fixture	60	0.600	1,656	10	Re-Lamp with (1) 10 Watt LED A19	10	0.100	276
LAUREL HILL STATE PARK	REC HALL	153	EXTERIOR		EXTERIOR	1	60 Watt Incandescent A-Lamp Fixture	60	0.060	263	1	Re-Lamp with (1) 10 Watt LED A19	10	0.010	44
LAUREL HILL STATE PARK	CABIN	155	INTERIOR		BEDROOM 1-3	3	60 Watt Incandescent A-Lamp Fixture	60	0.180	667	3	Re-Lamp with (1) 10 Watt LED A19	10	0.030	111
LAUREL HILL STATE PARK	CABIN	155	EXTERIOR		EXTERIOR	3	90 Watt Incandescent PAR38 Fixture	90	0.270	1,183	3	Re-Lamp with (1) 17 Watt LED PAR38	17	0.051	223
LAUREL HILL STATE PARK	DINING HALL	154	INTERIOR		RESTROOM	1	25 Watt Incandescent 4-Lamp Globe Fixture	100	0.100	276	1	Re-Lamp with (4) 8 Watt LED G25 Globe	32	0.032	88
LAUREL HILL STATE PARK	DINING HALL	154	INTERIOR		KITCHEN	8	60 Watt Incandescent A-Lamp Fixture	60	0.480	1,325	8	Re-Lamp with (1) 10 Watt LED A19	10	0.080	221
LAUREL HILL STATE PARK	DINING HALL	154	INTERIOR		KITCHEN HOOD	6	60 Watt Incandescent A-Lamp Jelly Jar Fixture	60	0.360	994	6	Re-Lamp with (1) 10 Watt LED A19	10	0.060	166
LAUREL HILL STATE PARK	DINING HALL	154	INTERIOR		STORAGE	2	60 Watt Incandescent A-Lamp Fixture	60	0.120	331	2	Re-Lamp with (1) 10 Watt LED A19	10	0.020	55
LAUREL HILL STATE PARK	DINING HALL	154	INTERIOR		COOLERS	2	60 Watt Incandescent A-Lamp Jelly Jar Fixture	60	0.120	331	2	Re-Lamp with (1) 10 Watt LED A19	10	0.020	55
LAUREL HILL STATE PARK	DINING HALL	154	INTERIOR		DINING	13	T12 1x4 4-Lamp Wrap Fixture	144	1.872	5,167	13	Retrofit with (4) 12.5 Watt LED T8 4' Lamps; Direct Wire to Socket	50	0.650	1,794
LAUREL HILL STATE PARK	DINING HALL	154	INTERIOR		DINING	3	T12 1x4 4-Lamp Wrap Fixture; Damaged	144	0.432	1,192	3	New 1x8 2-Lamp Wrap Fixture with (4) 12.5 Watt LED T8 4' Lamps; Direct Wire to Socket	50	0.150	414
LAUREL HILL STATE PARK	DINING HALL	154	EXTERIOR		EXTERIOR	4	90 Watt Incandescent PAR38 Fixture	90	0.360	1,577	4	Re-Lamp with (1) 17 Watt LED PAR38	17	0.068	298
LAUREL HILL STATE PARK	CRAFT BUILDING	177	INTERIOR		CRAFT ROOM	1	60 Watt Incandescent A-Lamp Fixture	60	0.060	135	1	Re-Lamp with (1) 10 Watt LED A19	10	0.010	22

©2013 Energy Systems Group, LLC

EXISTING FIXTURES											PROPOSED FIXTURE UPGRADE				
Park/Building Name	Building	Building #	Phase	Floor	Room Description	Qty	Description	Watts	kW	kWh	Qty	Description	Watts	kW	kWh
LAUREL HILL STATE PARK	CRAFT BUILDING	177	INTERIOR		CRAFT ROOM	3	60 Watt Incandescent A-Lamp Fixture	60	0.180	405	3	Re-Lamp with (1) 10 Watt LED A19	10	0.030	67
LAUREL HILL STATE PARK	SHOWER HOUSE		INTERIOR		MENS RESTROOM	6	T12 1x4 2-Lamp Vaportight Fixture	72	0.432	1,192	6	Retrofit with (2) 12.5 Watt LED T8 4' Lamps; Direct Wire to Socket	25	0.150	414
LAUREL HILL STATE PARK	SHOWER HOUSE		INTERIOR		MENS RESTROOM	3	T12 1x4 2-Lamp Vaportight Fixture	72	0.216	596	3	Retrofit with (2) 12.5 Watt LED T8 4' Lamps; Direct Wire to Socket	25	0.075	207
LAUREL HILL STATE PARK	SHOWER HOUSE		INTERIOR		WOMENS RESTROOM	3	T12 1x4 2-Lamp Vaportight Fixture	72	0.216	596	3	Retrofit with (2) 12.5 Watt LED T8 4' Lamps; Direct Wire to Socket	25	0.075	207
LAUREL HILL STATE PARK	SHOWER HOUSE		INTERIOR		WOMENS RESTROOM	6	T12 1x4 2-Lamp Vaportight Fixture	72	0.432	1,192	6	Retrofit with (2) 12.5 Watt LED T8 4' Lamps; Direct Wire to Socket	25	0.150	414
LAUREL HILL STATE PARK	SHOWER HOUSE		INTERIOR		PIPE CHASE	2	T12 1x4 2-Lamp Vaportight Fixture	72	0.144	397	2	Retrofit with (2) 12.5 Watt LED T8 4' Lamps; Direct Wire to Socket	25	0.050	138
LAUREL HILL STATE PARK	SHOWER HOUSE		EXTERIOR		EXTERIOR	2	T12 1x4 2-Lamp Vaportight Fixture	72	0.144	631	2	Retrofit with (2) 12.5 Watt LED T8 4' Lamps; Direct Wire to Socket	25	0.050	219
LAUREL HILL STATE PARK	SHOWER HOUSE		EXTERIOR		EXTERIOR	3	70 Watt High Pressure Sodium Wall Pack Fixture	90	0.270	1,183	3	New 24 Watt LED Wall Pack Fixture; Non-Dark Sky	25	0.075	329
LAUREL HILL STATE PARK	INFIRMARY		INTERIOR		BED	1	60 Watt Incandescent A-Lamp Fixture	60	0.060	135	1	Re-Lamp with (1) 10 Watt LED A19	10	0.010	22
LAUREL HILL STATE PARK	INFIRMARY	157	INTERIOR		BATH	1	60 Watt Incandescent A-Lamp Fixture	60	0.060	135	1	Re-Lamp with (1) 10 Watt LED A19	10	0.010	22
LAUREL HILL STATE PARK	INFIRMARY	157	INTERIOR		BED	1	60 Watt Incandescent A-Lamp Fixture	60	0.060	135	1	Re-Lamp with (1) 10 Watt LED A19	10	0.010	22
LAUREL HILL STATE PARK	INFIRMARY	157	INTERIOR		OFFICE	1	60 Watt Incandescent A-Lamp Fixture	60	0.060	135	1	Re-Lamp with (1) 10 Watt LED A19	10	0.010	22
LAUREL HILL STATE PARK	INFIRMARY	157	INTERIOR		RESTROOM	1	60 Watt Incandescent A-Lamp Fixture	60	0.060	135	1	Re-Lamp with (1) 10 Watt LED A19	10	0.010	22
LAUREL HILL STATE PARK	INFIRMARY	157	INTERIOR		BED	1	60 Watt Incandescent A-Lamp Fixture	60	0.060	135	1	Re-Lamp with (1) 10 Watt LED A19	10	0.010	22
LAUREL HILL STATE PARK	INFIRMARY	157	EXTERIOR		EXTERIOR	1	60 Watt Incandescent A-Lamp Fixture	60	0.060	263	1	Re-Lamp with (1) 10 Watt LED A19	10	0.010	44
LAUREL HILL STATE PARK	CABIN	178	INTERIOR		BEDROOM	1	60 Watt Incandescent A-Lamp Fixture	60	0.060	222	1	Re-Lamp with (1) 10 Watt LED A19	10	0.010	37
LAUREL HILL STATE PARK	CABIN	179	INTERIOR		BEDROOM	1	60 Watt Incandescent A-Lamp Fixture	60	0.060	222	1	Re-Lamp with (1) 10 Watt LED A19	10	0.010	37
LAUREL HILL STATE PARK	CABIN	186	INTERIOR		BEDROOM	1	60 Watt Incandescent A-Lamp Fixture	60	0.060	222	1	Re-Lamp with (1) 10 Watt LED A19	10	0.010	37
LAUREL HILL STATE PARK	BATHROOM	180	INTERIOR		BEDROOM	2	60 Watt Incandescent A-Lamp Fixture	60	0.120	331	2	Re-Lamp with (1) 10 Watt LED A19	10	0.020	55
LAUREL HILL STATE PARK	BATHROOM	180	INTERIOR		MENS RESTROOM	2	60 Watt Incandescent A-Lamp Fixture	60	0.120	550	2	Re-Lamp with (1) 10 Watt LED A19	10	0.020	92
LAUREL HILL STATE PARK	STAFF CABIN	185	INTERIOR		WOMENS RESTROOM	4	60 Watt Incandescent A-Lamp Fixture	60	0.240	889	4	Re-Lamp with (1) 10 Watt LED A19	10	0.040	148
LAUREL HILL STATE PARK	CABIN	184	INTERIOR		BEDROOM	1	60 Watt Incandescent A-Lamp Fixture	60	0.060	222	1	Re-Lamp with (1) 10 Watt LED A19	10	0.010	37
LAUREL HILL STATE PARK	CABIN	183	INTERIOR		BEDROOM	1	60 Watt Incandescent A-Lamp Fixture	60	0.060	222	1	Re-Lamp with (1) 10 Watt LED A19	10	0.010	37
LAUREL HILL STATE PARK	CABIN	182	INTERIOR		BEDROOM	1	60 Watt Incandescent A-Lamp Fixture	60	0.060	222	1	Re-Lamp with (1) 10 Watt LED A19	10	0.010	37
LAUREL HILL STATE PARK	CABIN	181	INTERIOR		BEDROOM	1	60 Watt Incandescent A-Lamp Fixture	60	0.060	222	1	Re-Lamp with (1) 10 Watt LED A19	10	0.010	37
LAUREL HILL STATE PARK	STAFF CABIN	187	INTERIOR		BEDROOM	2	60 Watt Incandescent A-Lamp Fixture	60	0.120	444	2	Re-Lamp with (1) 10 Watt LED A19	10	0.020	74

©2013 Energy Systems Group, LLC

EXISTING FIXTURES										PROPOSED FIXTURE UPGRADE				
Park/Building Name	Building	Building #	Phase	Floor	Room Description	Qty	Description	Watts	kW	kWh	Qty	Description	Watts	kW	kWh
LAUREL HILL STATE PARK	MENS RR	187	INTERIOR		MENS RESTROOM	2	60 Watt Incandescent A-Lamp Fixture	60	0.120	331	2	Re-Lamp with (1) 10 Watt LED A19	10	0.020	55
LAUREL HILL STATE PARK	WOMENS RR	187	INTERIOR		WOMENS RESTROOM	2	60 Watt Incandescent A-Lamp Fixture	60	0.120	331	2	Re-Lamp with (1) 10 Watt LED A19	10	0.020	55
LAUREL HILL STATE PARK	CABIN	193	INTERIOR		BEDROOM	1	60 Watt Incandescent A-Lamp Fixture	60	0.060	222	1	Re-Lamp with (1) 10 Watt LED A19	10	0.010	37
LAUREL HILL STATE PARK	CABIN	191	INTERIOR		BEDROOM	1	60 Watt Incandescent A-Lamp Fixture	60	0.060	222	1	Re-Lamp with (1) 10 Watt LED A19	10	0.010	37
LAUREL HILL STATE PARK	CABIN	194	INTERIOR		BEDROOM	1	60 Watt Incandescent A-Lamp Fixture	60	0.060	222	1	Re-Lamp with (1) 10 Watt LED A19	10	0.010	37
LAUREL HILL STATE PARK	CABIN	195	INTERIOR		BEDROOM	1	60 Watt Incandescent A-Lamp Fixture	60	0.060	222	1	Re-Lamp with (1) 10 Watt LED A19	10	0.010	37
LAUREL HILL STATE PARK	CABIN	188	INTERIOR		BEDROOM	1	60 Watt Incandescent A-Lamp Fixture	60	0.060	222	1	Re-Lamp with (1) 10 Watt LED A19	10	0.010	37
LAUREL HILL STATE PARK	CABIN	189	INTERIOR		BEDROOM	1	60 Watt Incandescent A-Lamp Fixture	60	0.060	222	1	Re-Lamp with (1) 10 Watt LED A19	10	0.010	37
LAUREL HILL STATE PARK	CABIN	190	INTERIOR		BEDROOM	1	60 Watt Incandescent A-Lamp Fixture	60	0.060	222	1	Re-Lamp with (1) 10 Watt LED A19	10	0.010	37
LAUREL HILL STATE PARK	STAFF CABIN	158	INTERIOR		BEDROOM	2	T8 1x4 4-Lamp Wrap Fixture	106	0.212	785	2	Retrofit with (4) 12.5 Watt LED T8 4' Lamps; Direct Wire to Socket	50	0.100	370
LAUREL HILL STATE PARK	STAFF CABIN	158	EXTERIOR		EXTERIOR	1	60 Watt Incandescent A-Lamp Fixture	60	0.060	263	1	Re-Lamp with (1) 10 Watt LED A19	10	0.010	44
LAUREL HILL STATE PARK	CABIN	159	INTERIOR		BEDROOM	1	60 Watt Incandescent A-Lamp Fixture	60	0.060	222	1	Re-Lamp with (1) 10 Watt LED A19	10	0.010	37
LAUREL HILL STATE PARK	CABIN	165	INTERIOR		BEDROOM	2	60 Watt Incandescent A-Lamp Fixture	60	0.120	444	2	Re-Lamp with (1) 10 Watt LED A19	10	0.020	74
LAUREL HILL STATE PARK	CABIN	164	INTERIOR		BEDROOM	2	60 Watt Incandescent A-Lamp Fixture	60	0.120	444	2	Re-Lamp with (1) 10 Watt LED A19	10	0.020	74
LAUREL HILL STATE PARK	CABIN	160	INTERIOR		BEDROOM	1	60 Watt Incandescent A-Lamp Fixture	60	0.060	222	1	Re-Lamp with (1) 10 Watt LED A19	10	0.010	37
LAUREL HILL STATE PARK	CABIN	161	INTERIOR		BEDROOM	1	60 Watt Incandescent A-Lamp Fixture	60	0.060	222	1	Re-Lamp with (1) 10 Watt LED A19	10	0.010	37
LAUREL HILL STATE PARK	CABIN	162	INTERIOR		BEDROOM	1	60 Watt Incandescent A-Lamp Fixture	60	0.060	222	1	Re-Lamp with (1) 10 Watt LED A19	10	0.010	37
LAUREL HILL STATE PARK	CABIN	163	INTERIOR		BEDROOM	1	60 Watt Incandescent A-Lamp Fixture	60	0.060	222	1	Re-Lamp with (1) 10 Watt LED A19	10	0.010	37
LAUREL HILL STATE PARK	CABIN	196	INTERIOR		BEDROOM	1	60 Watt Incandescent 2-Lamp Fixture	120	0.120	444	1	Re-Lamp with (2) 10 Watt LED A19	20	0.020	74
LAUREL HILL STATE PARK	CABIN	196	INTERIOR		BEDROOM	3	60 Watt Incandescent A-Lamp Fixture	60	0.180	667	3	Re-Lamp with (1) 10 Watt LED A19	10	0.030	111
LAUREL HILL STATE PARK	CABIN	196	EXTERIOR		EXTERIOR	1	65 Watt Incandescent PAR30 Fixture	65	0.065	285	1	Re-Lamp with (1) 10 Watt LED PAR30	10	0.010	44
LAUREL HILL STATE PARK	SCENIC VIEW STABLE LODGE		INTERIOR	BASEMENT	LODGE	5	T8 2x4 4-Lamp Troffer Fixture	106	0.530	1,191	5	Retrofit with (4) 12.5 Watt LED T8 4' Lamps; Direct Wire to Socket	50	0.250	562
LAUREL HILL STATE PARK	SCENIC VIEW STABLE LODGE		INTERIOR	BASEMENT	LODGE	1	13 Watt Compact Fluorescent 3-Lamp Fixture	39	0.039	88	1	Re-Lamp with (3) 10 Watt LED A19	30	0.030	67
LAUREL HILL STATE PARK	SCENIC VIEW STABLE LODGE		INTERIOR	BASEMENT	MECHANICAL	1	23 Watt Compact Fluorescent Fixture	23	0.023	23	1	Re-Lamp with (1) 10 Watt LED A19	10	0.010	10
LAUREL HILL STATE PARK	SCENIC VIEW STABLE LODGE		INTERIOR	BASEMENT	STORAGE	1	T12 1x4 2-Lamp Wrap Fixture; Damaged	72	0.072	72	1	New 1x4 2-Lamp Wrap Fixture with (2) 12.5 Watt LED T8 4' Lamp; Direct Wire to Socket	25	0.025	25
LAUREL HILL STATE PARK	SCENIC VIEW STABLE LODGE		INTERIOR	BASEMENT	LAUNDRY ROOM	1	T8 2x4 4-Lamp Troffer Fixture	106	0.106	238	1	Retrofit with (4) 12.5 Watt LED T8 4' Lamps; Direct Wire to Socket	50	0.050	112

©2013 Energy Systems Group, LLC

EXISTING FIXTURES												PROPOSED FIXTURE UPGRADE				
Park/Building Name	Building	Building #	Phase	Floor	Room Description	Qty	Description	Watts	kW	kWh	Qty	Description	Watts	kW	kWh
LAUREL HILL STATE PARK	SCENIC VIEW STABLE LODGE		INTERIOR	BASEMENT	KITCHEN	4	T8 2x4 4-Lamp Troffer Fixture	106	0.424	953	4	Retrofit with (4) 12.5 Watt LED T8 4' Lamps; Direct Wire to Socket	50	0.200	450
LAUREL HILL STATE PARK	SCENIC VIEW STABLE LODGE		INTERIOR	BASEMENT	RESTROOM	1	T8 2x2 2-Lamp U-Lamp Troffer Fixture with 6" Lamps	62	0.062	139	1	Retrofit with (2) 10 Watt LED T8 2' Lamps and (1) 2x2 2-Lamp White Reflector Kit; Direct Wire to Socket	20	0.020	45
LAUREL HILL STATE PARK	SCENIC VIEW STABLE LODGE		INTERIOR	BASEMENT	RESTROOM	1	40 Watt Incandescent 4-Lamp Fixture	160	0.160	360	1	Re-Lamp with (4) 7 Watt LED A19	28	0.028	63
LAUREL HILL STATE PARK	SCENIC VIEW STABLE LODGE		INTERIOR	BASEMENT	HALL	1	T8 2x4 4-Lamp Troffer Fixture	106	0.106	238	1	Retrofit with (4) 12.5 Watt LED T8 4' Lamps; Direct Wire to Socket	50	0.050	112
LAUREL HILL STATE PARK	SCENIC VIEW STABLE LODGE		INTERIOR	BASEMENT	STAIR	2	23 Watt Compact Fluorescent Fixture	23	0.046	103	2	Re-Lamp with (1) 10 Watt LED A19	10	0.020	45
LAUREL HILL STATE PARK	SCENIC VIEW STABLE LODGE		INTERIOR	1	BED 1-10	10	60 Watt Incandescent 2-Lamp Fixture	120	1.200	2,698	10	Re-Lamp with (2) 10 Watt LED A19	20	0.200	450
LAUREL HILL STATE PARK	SCENIC VIEW STABLE LODGE		INTERIOR	1	HALL	9	23 Watt Compact Fluorescent Fixture	23	0.207	465	9	Re-Lamp with (1) 10 Watt LED A19	10	0.090	202
LAUREL HILL STATE PARK	SCENIC VIEW STABLE LODGE		INTERIOR	1	HALL	1	13 Watt Compact Fluorescent 3-Lamp Fixture	39	0.039	88	1	Re-Lamp with (3) 10 Watt LED A19	30	0.030	67
LAUREL HILL STATE PARK	SCENIC VIEW STABLE LODGE		INTERIOR	1	HALL	2	3 Watt LED 2-Lamp Exit Sign	3	0.006	53	2	No Retrofit	3	0.006	53
LAUREL HILL STATE PARK	SCENIC VIEW STABLE LODGE		INTERIOR	1	WOMENS RESTROOM	2	60 Watt Incandescent 2-Lamp Fixture	120	0.240	540	2	Re-Lamp with (2) 10 Watt LED A19	20	0.040	90
LAUREL HILL STATE PARK	SCENIC VIEW STABLE LODGE		INTERIOR	1	WOMENS RESTROOM	1	60 Watt Incandescent A-Lamp Fixture	60	0.060	135	1	Re-Lamp with (1) 10 Watt LED A19	10	0.010	22
LAUREL HILL STATE PARK	SCENIC VIEW STABLE LODGE		INTERIOR	1	WOMENS RESTROOM	2	T8 1x4 4-Lamp Wrap Fixture	106	0.212	477	2	Retrofit with (4) 12.5 Watt LED T8 4' Lamps; Direct Wire to Socket	50	0.100	225
LAUREL HILL STATE PARK	SCENIC VIEW STABLE LODGE		INTERIOR	1	MENS RESTROOM	2	13 Watt Compact Fluorescent 2-Lamp Fixture	26	0.052	117	2	Re-Lamp with (2) 10 Watt LED A19	20	0.040	90
LAUREL HILL STATE PARK	SCENIC VIEW STABLE LODGE		INTERIOR	1	MENS RESTROOM	2	60 Watt Incandescent A-Lamp Fixture	60	0.120	270	2	Re-Lamp with (1) 10 Watt LED A19	10	0.020	45
LAUREL HILL STATE PARK	SCENIC VIEW STABLE LODGE		INTERIOR	1	MENS RESTROOM	1	T8 1x4 4-Lamp Wrap Fixture	106	0.106	238	1	Retrofit with (4) 12.5 Watt LED T8 4' Lamps; Direct Wire to Socket	50	0.050	112
LAUREL HILL STATE PARK	SCENIC VIEW STABLE LODGE		INTERIOR	2	STAIR	1	13 Watt Compact Fluorescent 2-Lamp Fixture	26	0.026	58	1	Re-Lamp with (2) 10 Watt LED A19	20	0.020	45
LAUREL HILL STATE PARK	SCENIC VIEW STABLE LODGE		INTERIOR	2	STAIR	1	13 Watt Compact Fluorescent 2-Lamp Fixture	26	0.026	58	1	Re-Lamp with (2) 10 Watt LED A19	20	0.020	45
LAUREL HILL STATE PARK	SCENIC VIEW STABLE LODGE		INTERIOR	2	BEDROOM	2	40 Watt Incandescent 4-Lamp Fixture	160	0.320	719	2	Re-Lamp with (4) 7 Watt LED A19	28	0.056	126
LAUREL HILL STATE PARK	SCENIC VIEW STABLE LODGE		INTERIOR	2	BEDROOM	2	13 Watt Compact Fluorescent 2-Lamp Fixture	26	0.052	117	2	Re-Lamp with (2) 10 Watt LED A19	20	0.040	90
LAUREL HILL STATE PARK	SCENIC VIEW STABLE LODGE		INTERIOR	2	BEDROOM	1	60 Watt Incandescent 2-Lamp Fixture	120	0.120	270	1	Re-Lamp with (2) 10 Watt LED A19	20	0.020	45
LAUREL HILL STATE PARK	SCENIC VIEW STABLE LODGE		INTERIOR	2	MENS RESTROOM	1	60 Watt Incandescent 2-Lamp Fixture	120	0.120	270	1	Re-Lamp with (2) 10 Watt LED A19	20	0.020	45
LAUREL HILL STATE PARK	SCENIC VIEW STABLE LODGE		INTERIOR	2	MENS RESTROOM	1	40 Watt Incandescent 6-Lamp Globe Fixture	240	0.240	540	1	Relamp with (6) 8 Watt LED G25	48	0.048	108
LAUREL HILL STATE PARK	SCENIC VIEW STABLE LODGE		INTERIOR	2	WOMENS RESTROOM	1	60 Watt Incandescent 2-Lamp Fixture	120	0.120	270	1	Re-Lamp with (2) 10 Watt LED A19	20	0.020	45
LAUREL HILL STATE PARK	SCENIC VIEW STABLE LODGE		INTERIOR	2	WOMENS RESTROOM	1	40 Watt Incandescent 6-Lamp Globe Fixture	240	0.240	540	1	Relamp with (6) 8 Watt LED G25	48	0.048	108
LAUREL HILL STATE PARK	SCENIC VIEW STABLE LODGE		INTERIOR	2	WOMENS RESTROOM	20	23 Watt Compact Fluorescent Fixture	23	0.460	1,034	20	Re-Lamp with (1) 10 Watt LED A19	10	0.200	450
LAUREL HILL STATE PARK	SCENIC VIEW STABLE LODGE		EXTERIOR	2	EXTERIOR	3	60 Watt Incandescent A-Lamp Fixture	60	0.180	788	3	Re-Lamp with (1) 10 Watt LED A19	10	0.030	131

©2013 Energy Systems Group, LLC

EXISTING FIXTURES											PROPOSED FIXTURE UPGRADE				
Park/Building Name	Building	Building #	Phase	Floor	Room Description	Qty	Description	Watts	kW	kWh	Qty	Description	Watts	kW	kWh
LAUREL HILL STATE PARK	SCENIC VIEW STABLE LODGE		EXTERIOR	2	EXTERIOR	1	150 Watt Quartz 2-Head Flood Fixture	300	0.300	1,314	1	(2) New 26 Watt LED Flood Fixtures	52	0.052	228
LAUREL HILL STATE PARK	SCENIC VIEW STABLE LODGE		EXTERIOR	2	EXTERIOR	3	23 Watt Compact Fluorescent 2-Lamp R40 Fixture	46	0.138	604	3	Relamp with (2) 17 Watt LED BR40	34	0.102	447
LAUREL HILL STATE PARK	SCENIC VIEW STABLE LODGE		EXTERIOR	2	UNDER DECK	2	13 Watt Compact Fluorescent Downlight	13	0.026	114	2	Re-Lamp with (1) 10 Watt LED BR30	10	0.020	88
LAUREL HILL STATE PARK	SCENIC VIEW STABLE LODGE		EXTERIOR	2	EXTERIOR	1	13 Watt Compact Fluorescent 2-Lamp R30 Fixture	26	0.026	114	1	Relamp with (2) 10 Watt LED BR30	20	0.020	88
LAUREL HILL STATE PARK	SCENIC RED OAK LODGE		INTERIOR	1	OPEN FLOOR	1	60 Watt Incandescent 4-Lamp Fixture	240	0.240	540	1	Re-Lamp with (4) 10 Watt LED A19	40	0.040	90
LAUREL HILL STATE PARK	SCENIC RED OAK LODGE		INTERIOR	1	OPEN FLOOR	1	60 Watt Incandescent 3-Lamp Fixture	180	0.180	405	1	Re-Lamp with (3) 10 Watt LED A19	30	0.030	67
LAUREL HILL STATE PARK	SCENIC RED OAK LODGE		INTERIOR	1	OPEN FLOOR	1	13 Watt Compact Fluorescent 2-Lamp Fixture	26	0.026	58	1	Re-Lamp with (2) 10 Watt LED A19	20	0.020	45
LAUREL HILL STATE PARK	SCENIC RED OAK LODGE		INTERIOR	1	RESTROOM	1	60 Watt Incandescent 2-Lamp Fixture	120	0.120	270	1	Re-Lamp with (2) 10 Watt LED A19	20	0.020	45
LAUREL HILL STATE PARK	SCENIC RED OAK LODGE		INTERIOR	2	BEDROOM	1	23 Watt Compact Fluorescent 2-Lamp Fixture	46	0.046	103	1	Re-Lamp with (2) 10 Watt LED A19	20	0.020	45
LAUREL HILL STATE PARK	SCENIC RED OAK LODGE		INTERIOR	2	BEDROOM	1	40 Watt Incandescent 3-Lamp Candelabra Fixture	120	0.120	270	1	Re-Lamp with (3) 5 Watt LED Candelabra	15	0.015	34
LAUREL HILL STATE PARK	SCENIC RED OAK LODGE		INTERIOR	2	STAIR	2	23 Watt Compact Fluorescent Fixture	23	0.046	103	2	Re-Lamp with (1) 10 Watt LED A19	10	0.020	45
LAUREL HILL STATE PARK	SCENIC RED OAK LODGE		EXTERIOR	2	EXTERIOR	2	23 Watt Compact Fluorescent Jelly Jar	23	0.046	201	2	Re-Lamp with (1) 10 Watt LED A19	10	0.020	88
LAUREL HILL STATE PARK	SCENIC RED OAK LODGE		EXTERIOR	2	EXTERIOR	1	100 Watt 2-Lamp Quartz Flood Fixture	200	0.200	876	1	(2) New 18 Watt LED Flood Fixtures	36	0.036	158
LAUREL HILL STATE PARK	SCENIC RED OAK LODGE		INTERIOR	2	CRAWL SPACE	1	23 Watt Compact Fluorescent Fixture	23	0.023	23	1	Re-Lamp with (1) 10 Watt LED A19	10	0.010	10
LAUREL HILL STATE PARK	SCENIC PAVILLION		EXTERIOR		PAVILLION	14	T8 1x4 2-Lamp Vaportight Fixture	62	0.868	3,802	14	Retrofit with (2) 12.5 Watt LED T8 4' Lamps; Direct Wire to Socket	25	0.350	1,533
LAUREL HILL STATE PARK	SCENIC PAVILLION		EXTERIOR		PAVILLION	1	100 Watt High Pressure Sodium Flood Fixture	125	0.125	548	1	New 26 Watt LED Flood Fixture	27	0.027	118
LAUREL HILL STATE PARK	SCENIC PAVILLION RESTROOMS		INTERIOR		MENS RESTROOM	2	T8 1x4 4-Lamp Wrap Fixture	106	0.212	585	2	Retrofit with (4) 12.5 Watt LED T8 4' Lamps; Direct Wire to Socket	50	0.100	276
LAUREL HILL STATE PARK	SCENIC PAVILLION RESTROOMS		INTERIOR		WOMENS RESTROOM	2	T8 1x4 4-Lamp Wrap Fixture	106	0.212	585	2	Retrofit with (4) 12.5 Watt LED T8 4' Lamps; Direct Wire to Socket	50	0.100	276
LAUREL HILL STATE PARK	SCENIC PAVILLION RESTROOMS		INTERIOR		EXTERIOR	2	60 Watt Incandescent A-Lamp Fixture	60	0.120	526	2	Re-Lamp with (1) 10 Watt LED A19	10	0.020	88
LAUREL HILL STATE PARK	SCENIC LAKE SIDE LODGE		INTERIOR		UNDER CANOPY	8	Existing LED Fixture; No Retrofit	10	0.080	180	8	No Retrofit	10	0.080	180
LAUREL HILL STATE PARK	SCENIC LAKE SIDE LODGE		INTERIOR		FIRE PLACE	1	T8 1x4 2-Lamp Vaportight Fixture	62	0.062	139	1	Retrofit with (2) 12.5 Watt LED T8 4' Lamps; Direct Wire to Socket	25	0.025	56
LAUREL HILL STATE PARK	SCENIC LAKE SIDE LODGE		INTERIOR		COOLERS	1	T8 1x4 2-Lamp Vaportight Fixture	62	0.062	62	1	Retrofit with (2) 12.5 Watt LED T8 4' Lamps; Direct Wire to Socket	25	0.025	25
LAUREL HILL STATE PARK	SCENIC LAKE SIDE LODGE		INTERIOR		STORAGE	2	13 Watt Compact Fluorescent Fixture	13	0.026	26	2	Re-Lamp with (1) 10 Watt LED A19	10	0.020	20
LAUREL HILL STATE PARK	SCENIC LAKE SIDE LODGE		INTERIOR	BASEMENT	KITCHEN	1	T8 1x4 4-Lamp Wrap Fixture	106	0.106	238	1	Retrofit with (4) 12.5 Watt LED T8 4' Lamps; Direct Wire to Socket	50	0.050	112
LAUREL HILL STATE PARK	SCENIC LAKE SIDE LODGE		INTERIOR	BASEMENT	KITCHEN	1	T8 1x4 2-Lamp Strip Fixture	62	0.062	139	1	Retrofit with (2) 12.5 Watt LED T8 4' Lamps; Direct Wire to Socket	25	0.025	56
LAUREL HILL STATE PARK	SCENIC LAKE SIDE LODGE		INTERIOR	BASEMENT	LOUNGE	6	T8 1x4 4-Lamp Wrap Fixture	106	0.636	1,430	6	Retrofit with (4) 12.5 Watt LED T8 4' Lamps; Direct Wire to Socket	50	0.300	674

©2013 Energy Systems Group, LLC

EXISTING FIXTURES												PROPOSED FIXTURE UPGRADE				
Park/Building Name	Building	Building #	Phase	Floor	Room Description	Qty	Description	Watts	kW	kWh	Qty	Description	Watts	kW	kWh
LAUREL HILL STATE PARK	SCENIC LAKE SIDE LODGE		INTERIOR		BEDROOM	3	60 Watt Incandescent 2-Lamp Fixture	120	0.360	809	3	Re-Lamp with (2) 10 Watt LED A19	20	0.060	135
LAUREL HILL STATE PARK	SCENIC LAKE SIDE LODGE		INTERIOR		LAUNDRY ROOM	1	T12 1x4 2-Lamp Strip Fixture	72	0.072	162	1	Retrofit with (2) 12.5 Watt LED T8 4' Lamps; Direct Wire to Socket	25	0.025	56
LAUREL HILL STATE PARK	SCENIC LAKE SIDE LODGE		INTERIOR		MENS RESTROOM	3	T8 1x4 4-Lamp Wrap Fixture	106	0.318	715	3	Retrofit with (4) 12.5 Watt LED T8 4' Lamps; Direct Wire to Socket	50	0.150	337
LAUREL HILL STATE PARK	SCENIC LAKE SIDE LODGE		INTERIOR		WOMENS RESTROOM	3	T8 1x4 4-Lamp Wrap Fixture	106	0.318	715	3	Retrofit with (4) 12.5 Watt LED T8 4' Lamps; Direct Wire to Socket	50	0.150	337
LAUREL HILL STATE PARK	SCENIC LAKE SIDE LODGE		INTERIOR		WOMENS RESTROOM	1	40 Watt Incandescent 6-Lamp Globe Fixture	240	0.240	540	1	Relamp with (6) 8 Watt LED G25	48	0.048	108
LAUREL HILL STATE PARK	SCENIC LAKE SIDE LODGE		INTERIOR		MECHANICAL	2	T12 1x4 2-Lamp Wrap Fixture; Damaged	72	0.144	144	2	New 1x4 2-Lamp Wrap Fixture with (2) 12.5 Watt LED T8 4' Lamp; Direct Wire to Socket	25	0.050	50
LAUREL HILL STATE PARK	SCENIC LAKE SIDE LODGE		INTERIOR		STORAGE	1	T12 1x4 2-Lamp Wrap Fixture	72	0.072	72	1	Retrofit with (2) 12.5 Watt LED T8 4' Lamps; Direct Wire to Socket	25	0.025	25
LAUREL HILL STATE PARK	SCENIC LAKE SIDE LODGE		INTERIOR		STAIRS	1	23 Watt Compact Fluorescent Step Light Fixture	23	0.023	52	1	Re-Lamp with (1) 10 Watt LED A19	10	0.010	22
LAUREL HILL STATE PARK	SCENIC LAKE SIDE LODGE		INTERIOR		UPPER BALLROOM	8	60 Watt Incandescent 6-Lamp A-Lamp Fixture	360	2.880	6,474	8	Relamp with (6) 10 Watt LED A19	60	0.480	1,079
LAUREL HILL STATE PARK	SCENIC LAKE SIDE LODGE		INTERIOR		UPPER BALLROOM	5	60 Watt Incandescent A-Lamp Fixture	60	0.300	674	5	Re-Lamp with (1) 10 Watt LED A19	10	0.050	112
LAUREL HILL STATE PARK	SCENIC LAKE SIDE LODGE		INTERIOR		HALL	3	T8 1x4 4-Lamp Wrap Fixture	106	0.318	715	3	Retrofit with (4) 12.5 Watt LED T8 4' Lamps; Direct Wire to Socket	50	0.150	337
LAUREL HILL STATE PARK	SCENIC LAKE SIDE LODGE		INTERIOR		STORAGE	2	T8 1x4 4-Lamp Wrap Fixture	106	0.212	212	2	Retrofit with (4) 12.5 Watt LED T8 4' Lamps; Direct Wire to Socket	50	0.100	100
LAUREL HILL STATE PARK	SCENIC LAKE SIDE LODGE		INTERIOR		RESTROOM	1	0	62	0.062	139	1	Retrofit with (2) 18 Watt LED T8 U-Lamps; Direct Wire to Socket	36	0.036	81
LAUREL HILL STATE PARK	SCENIC LAKE SIDE LODGE		EXTERIOR		EXTERIOR DECK	2	90 Watt Incandescent PAR38 Fixture	90	0.180	788	2	Re-Lamp with (1) 17 Watt LED PAR38	17	0.034	149
LAUREL HILL STATE PARK	SCENIC LAKE SIDE LODGE		EXTERIOR		EXTERIOR DECK	1	90 Watt Incandescent PAR38 2-Lamp Fixture	180	0.180	788	1	Re-Lamp with (2) 17 Watt LED PAR38	34	0.034	149
LAUREL HILL STATE PARK	SCENIC LAKE SIDE LODGE		EXTERIOR		EXTERIOR DECK	2	150 Watt Quartz 2-Head Flood Fixture	300	0.600	2,628	2	(2) New 26 Watt LED Flood Fixtures	52	0.104	456
LAUREL HILL STATE PARK	SCENIC LAKE SIDE LODGE		EXTERIOR		FRONT	2	40 Watt Incandescent 4-Lamp Candelabra Fixture	160	0.320	1,402	2	Re-Lamp with (4) 5 Watt LED Candelabra	20	0.040	175
LAUREL HILL STATE PARK	SCENIC LAKE SIDE LODGE		EXTERIOR		FRONT	1	70 Watt High Pressure Sodium Dusk to Dawn Fixture	90	0.090	394	1	New 26 Watt LED Dusk to Dawn Barnyard Fixture	26	0.026	114
LAUREL HILL STATE PARK	SCENIC LAKE SIDE LODGE		EXTERIOR		UNDER DECK	2	60 Watt Incandescent A-Lamp Fixture	60	0.120	526	2	Re-Lamp with (1) 10 Watt LED A19	10	0.020	88
LAUREL HILL STATE PARK	SCENIC MAINTENANCE SHED		EXTERIOR		EXTERIOR	2	90 Watt Incandescent PAR38 2-Lamp Fixture	180	0.360	1,577	2	Re-Lamp with (2) 17 Watt LED PAR38	34	0.068	298
LAUREL HILL STATE PARK	SCENIC MAINTENANCE SHED		INTERIOR		BAY-TRACTOR	2	T8 1x8 4-Lamp Industrial Strip Fixture	62	0.124	323	2	Retrofit with (4) 12.5 Watt LED T8 4' Lamps; Direct Wire to Socket	50	0.100	260
LAUREL HILL STATE PARK	SCENIC MAINTENANCE SHED		INTERIOR		BAY-TRACTOR	1	T12 1x8 2-Lamp Industrial Strip Fixture with 60 Watt Lamps	123	0.123	320	1	Retrofit with (4) 12.5 Watt LED T8 4' Lamps and (1) 1x8 4-Lamp Industrial Strip Kit; Direct Wire to Socket	50	0.050	130
LAUREL HILL STATE PARK	SCENIC MAINTENANCE SHED		INTERIOR		BAY 2	6	T8 1x8 4-Lamp Industrial Strip Fixture	62	0.372	968	6	Retrofit with (4) 12.5 Watt LED T8 4' Lamps; Direct Wire to Socket	50	0.300	780
LAUREL HILL STATE PARK	VISITOR CENTER		EXTERIOR		EXTERIOR	4	90 Watt Incandescent PAR38 2-Lamp Fixture	180	0.720	3,154	4	Re-Lamp with (2) 17 Watt LED PAR38	34	0.136	596
LAUREL HILL STATE PARK	VISITOR CENTER		EXTERIOR		EXTERIOR	3	60 Watt Incandescent A-Lamp Fixture	60	0.180	788	3	Re-Lamp with (1) 10 Watt LED A19	10	0.030	131
LAUREL HILL STATE PARK	VISITOR CENTER		EXTERIOR		EXTERIOR	1	Existing LED Fixture; No Retrofit	40	0.040	175	1	No Retrofit	40	0.040	175

©2013 Energy Systems Group, LLC

EXISTING FIXTURES											PROPOSED FIXTURE UPGRADE				
Park/Building Name	Building	Building #	Phase	Floor	Room Description	Qty	Description	Watts	kW	kWh	Qty	Description	Watts	kW	kWh
LAUREL HILL STATE PARK	VISITOR CENTER		INTERIOR		RESTROOMS	1	13 Watt Compact Fluorescent 2-Lamp Fixture	26	0.026	58	1	Re-Lamp with (2) 10 Watt LED A19	20	0.020	45
LAUREL HILL STATE PARK	VISITOR CENTER		INTERIOR		LOBBY	3	13 Watt Compact Fluorescent 2-Lamp Fixture	26	0.078	175	3	Re-Lamp with (2) 10 Watt LED A19	20	0.060	135
LAUREL HILL STATE PARK	VISITOR CENTER		INTERIOR		LOBBY	23	50 Watt Incandescent MR16 Fixture	50	1.150	2,585	23	Re-Lamp with (1) 7 Watt LED MR16	7	0.161	362
LAUREL HILL STATE PARK	VISITOR CENTER		INTERIOR		LOBBY	2	40 Watt Incandescent Globe Fixture	40	0.080	180	2	Re-Lamp with (1) 8 Watt LED G25 Globe	8	0.016	36
LAUREL HILL STATE PARK	VISITOR CENTER		INTERIOR		SHOWCASE	1	No Retrofit	0	0.000	0	1	No Retrofit	0	0.000	0
LAUREL HILL STATE PARK	VISITOR CENTER		INTERIOR		GIFT SHOP	2	T12 1x4 4-Lamp Wrap Fixture	144	0.288	647	2	Retrofit with (4) 12.5 Watt LED T8 4' Lamps; Direct Wire to Socket	50	0.100	225
LAUREL HILL STATE PARK	VISITOR CENTER		INTERIOR		GIFT SHOP	1	13 Watt Compact Fluorescent 2-Lamp Fixture	26	0.026	58	1	Re-Lamp with (2) 10 Watt LED A19	20	0.020	45
LAUREL HILL STATE PARK	VISITOR CENTER		INTERIOR		GIFT SHOP	1	T12 1x4 4-Lamp Wrap Fixture	144	0.144	324	1	Retrofit with (4) 12.5 Watt LED T8 4' Lamps; Direct Wire to Socket	50	0.050	112
LAUREL HILL STATE PARK	VISITOR CENTER		INTERIOR		STORAGE	1	T12 1x4 2-Lamp Wrap Fixture	72	0.072	72	1	Retrofit with (2) 12.5 Watt LED T8 4' Lamps; Direct Wire to Socket	25	0.025	25
LAUREL HILL STATE PARK	VISITOR CENTER		INTERIOR		STORAGE	1	T12 1x4 4-Lamp Wrap Fixture	144	0.144	144	1	Retrofit with (4) 12.5 Watt LED T8 4' Lamps; Direct Wire to Socket	50	0.050	50
LAUREL HILL STATE PARK	VISITOR CENTER		INTERIOR		BASEMENT	4	T12 1x4 4-Lamp Wrap Fixture	144	0.576	1,295	4	Retrofit with (4) 12.5 Watt LED T8 4' Lamps; Direct Wire to Socket	50	0.200	450
LAUREL HILL STATE PARK	VISITOR CENTER		INTERIOR		UPPER HALL	1	T12 1x4 4-Lamp Wrap Fixture	144	0.144	324	1	Retrofit with (4) 12.5 Watt LED T8 4' Lamps; Direct Wire to Socket	50	0.050	112
LAUREL HILL STATE PARK	VISITOR CENTER		INTERIOR		RESTROOM	3	40 Watt Incandescent Globe Fixture	40	0.120	270	3	Re-Lamp with (1) 8 Watt LED G25 Globe	8	0.024	54
LAUREL HILL STATE PARK	VISITOR CENTER		INTERIOR		RESTROOM	1	60 Watt Incandescent A-Lamp Fixture	60	0.060	135	1	Re-Lamp with (1) 10 Watt LED A19	10	0.010	22
LAUREL HILL STATE PARK	VISITOR CENTER		INTERIOR		CONFERENCE ROOM	4	T12 1x4 4-Lamp Wrap Fixture	144	0.576	1,295	4	Retrofit with (4) 12.5 Watt LED T8 4' Lamps; Direct Wire to Socket	50	0.200	450
LAUREL HILL STATE PARK	VISITOR CENTER		INTERIOR		ATTIC	1	60 Watt Incandescent A-Lamp Fixture	60	0.060	60	1	Re-Lamp with (1) 10 Watt LED A19	10	0.010	10
LAUREL HILL STATE PARK	VISITOR CENTER		INTERIOR		OFFICE	1	T12 1x4 4-Lamp Wrap Fixture	144	0.144	324	1	Retrofit with (4) 12.5 Watt LED T8 4' Lamps; Direct Wire to Socket	50	0.050	112
LAUREL HILL STATE PARK	VISITOR CENTER		INTERIOR		OFFICE	2	T12 1x4 4-Lamp Wrap Fixture	144	0.288	647	2	Retrofit with (4) 12.5 Watt LED T8 4' Lamps; Direct Wire to Socket	50	0.100	225
LAUREL HILL STATE PARK	VISITOR CENTER		INTERIOR		CLOSET	1	13 Watt Compact Fluorescent Fixture	13	0.013	13	1	Re-Lamp with (1) 10 Watt LED A19	10	0.010	10
LAUREL HILL STATE PARK	CAMP GROUND GUARD SHACK		INTERIOR		OFFICE	2	T12 1x4 4-Lamp Wrap Fixture	144	0.288	647	2	Retrofit with (4) 12.5 Watt LED T8 4' Lamps; Direct Wire to Socket	50	0.100	225
LAUREL HILL STATE PARK	CAMP GROUND GUARD SHACK		EXTERIOR		EXTERIOR	2	Existing LED Fixture; No Retrofit	20	0.040	175	2	No Retrofit	20	0.040	175
LAUREL HILL STATE PARK	CAMP GROUND GUARD SHACK		EXTERIOR		EXTERIOR	1	T8 1x4 3-Lamp Wrap Fixture	84	0.084	368	1	Retrofit with (3) 12.5 Watt LED T8 4' Lamps; Direct Wire to Socket	37.5	0.038	164
LAUREL HILL STATE PARK	CAMP GROUND GUARD SHACK		EXTERIOR		EXTERIOR	3	Existing LED Fixture; No Retrofit	20	0.060	263	3	No Retrofit	20	0.060	263
LAUREL HILL STATE PARK	CAMP GROUND WOOD SHED		EXTERIOR		SHED	1	Existing LED Fixture; No Retrofit	10	0.010	44	1	No Retrofit	10	0.010	44
LAUREL HILL STATE PARK	CAMP GROUND WOOD SHED		EXTERIOR		SHED	5	Existing LED Fixture; No Retrofit	10	0.050	219	5	No Retrofit	10	0.050	219
LAUREL HILL STATE PARK	CAMP GROUND WOOD SHED		EXTERIOR		EXTERIOR	2	Existing LED Fixture; No Retrofit	10	0.020	88	2	No Retrofit	10	0.020	88

©2013 Energy Systems Group, LLC

EXISTING FIXTURES												PROPOSED FIXTURE UPGRADE				
Park/Building Name	Building	Building #	Phase	Floor	Room Description	Qty	Description	Watts	kW	kWh	Qty	Description	Watts	kW	kWh
LAUREL HILL STATE PARK	CAMP GROUND RESTROOM #1-5		INTERIOR		WOMENS RR	25	Existing LED Fixture; No Retrofit	40	1.000	2,760	25	No Retrofit	40	1.000	2,760
LAUREL HILL STATE PARK	CAMP GROUND RESTROOM #1-5		INTERIOR		MENS RESTROOM	25	Existing LED Fixture; No Retrofit	40	1.000	2,760	25	No Retrofit	40	1.000	2,760
LAUREL HILL STATE PARK	CAMP GROUND RESTROOM #1-5		INTERIOR		PIPE CHASE	5	60 Watt Incandescent A-Lamp Fixture	60	0.300	300	5	Re-Lamp with (1) 10 Watt LED A19	10	0.050	50
LAUREL HILL STATE PARK	CAMP GROUND RESTROOM #1-5		INTERIOR		EXTERIOR	5	23 Watt Compact Fluorescent Fixture	23	0.115	504	5	Re-Lamp with (1) 10 Watt LED A19	10	0.050	219
LAUREL HILL STATE PARK	RESTROOM #2,3,5 EXTERIOR		EXTERIOR		EXTERIOR	1	26 Watt Plug-In CFL 2-Lamp Canopy Fixture	58	0.058	254	1	New 10 Watt LED Canopy Fixture	12	0.012	53
LAUREL HILL STATE PARK	RESTROOM #2,3,5 EXTERIOR		EXTERIOR		EXTERIOR	1	Existing LED Fixture; No Retrofit	40	0.040	175	1	No Retrofit	40	0.040	175
LAUREL HILL STATE PARK	RESTROOM #2 EXTERIOR		EXTERIOR		EXTERIOR	3	100 Watt Metal Halide Flood Fixture; Trunion	125	0.375	1,643	3	New 26 Watt LED Flood Fixture; Trunion	26	0.078	342
LAUREL HILL STATE PARK	COTTAGE #1-8		EXTERIOR		PORCH	8	60 Watt Incandescent A-Lamp Jelly Jar Fixture	60	0.480	2,102	8	Re-Lamp with (1) 10 Watt LED A19	10	0.080	350
LAUREL HILL STATE PARK	COTTAGE #1-8		INTERIOR		SITTING	8	60 Watt Incandescent A-Lamp Jelly Jar Fixture	60	0.480	1,325	8	Re-Lamp with (1) 10 Watt LED A19	10	0.080	221
LAUREL HILL STATE PARK	COTTAGE #1-8		INTERIOR		BED	8	60 Watt Incandescent A-Lamp Fixture	60	0.480	1,325	8	Re-Lamp with (1) 10 Watt LED A19	10	0.080	221
LAUREL HILL STATE PARK	SAWMILL		INTERIOR		MILL	3	60 Watt Incandescent A-Lamp Fixture	60	0.180	468	3	Re-Lamp with (1) 10 Watt LED A19	10	0.030	78
LAUREL HILL STATE PARK	SAWMILL		INTERIOR		MILL	6	300 Watt Incandescent A-Lamp Fixture	300	1.800	4,682	6	Re-Lamp with (1) 27 Watt LED Omni-Cob Lamp; Hardwire Ballast	27	0.162	421
LAUREL HILL STATE PARK	SAWMILL RESTROOM		INTERIOR		RESTROOM	1	Abandoned; Area(s) Not Included in Scope/Pricing	0	0.000	0	1	No Retrofit	0	0.000	0
LAUREL HILL STATE PARK	BEACH CONCESSION STAND & RESTROOM		INTERIOR		STORAGE	1	T8 1x4 2-Lamp Vaportight Fixture	62	0.062	62	1	Retrofit with (2) 12.5 Watt LED T8 4' Lamps; Direct Wire to Socket	25	0.025	25
LAUREL HILL STATE PARK	BEACH CONCESSION STAND & RESTROOM		INTERIOR		KITCHEN	7	T8 1x4 2-Lamp Vaportight Fixture	62	0.434	1,198	7	Retrofit with (2) 12.5 Watt LED T8 4' Lamps; Direct Wire to Socket	25	0.175	483
LAUREL HILL STATE PARK	BEACH CONCESSION STAND & RESTROOM		INTERIOR		KITCHEN HOOD	2	60 Watt Incandescent A-Lamp Jelly Jar Fixture	60	0.120	331	2	Re-Lamp with (1) 10 Watt LED A19	10	0.020	55
LAUREL HILL STATE PARK	BEACH CONCESSION STAND & RESTROOM		EXTERIOR		EXTERIOR	5	70 Watt High Pressure Sodium Wall Pack Fixture	90	0.450	1,971	5	New 24 Watt LED Wall Pack Fixture; Non-Dark Sky	25	0.125	548
LAUREL HILL STATE PARK	BEACH CONCESSION STAND & RESTROOM		EXTERIOR		EXTERIOR	3	70 Watt High Pressure Sodium Recessed	95	0.285	1,248	3	Re-Lamp with (1) 27 Watt LED Omni-Cob Lamp; Hardwire Ballast	27	0.081	355
LAUREL HILL STATE PARK	BEACH CONCESSION STAND & RESTROOM		EXTERIOR		EXTERIOR	2	T8 1x4 2-Lamp Vaportight Fixture	62	0.124	543	2	Retrofit with (2) 12.5 Watt LED T8 4' Lamps; Direct Wire to Socket	25	0.050	219
LAUREL HILL STATE PARK	BEACH CONCESSION STAND & RESTROOM		INTERIOR		MENS RESTROOM	7	32 Watt Plug-In CFL 8" Downlight Fixture	35	0.245	676	7	No Retrofit	35	0.245	676
LAUREL HILL STATE PARK	BEACH CONCESSION STAND & RESTROOM		INTERIOR		MENS RESTROOM	1	32 Watt Plug-In CFL 8" Downlight Fixture	35	0.035	97	1	No Retrofit	35	0.035	97
LAUREL HILL STATE PARK	BEACH CONCESSION STAND & RESTROOM		INTERIOR		MENS RESTROOM	6	T8 1x4 2-Lamp Vanity Fixture	62	0.372	1,027	6	Retrofit with (2) 12.5 Watt LED T8 4' Lamps; Direct Wire to Socket	25	0.150	414
LAUREL HILL STATE PARK	BEACH CONCESSION STAND & RESTROOM		INTERIOR		MENS RESTROOM	4	32 Watt Plug-In CFL 8" Downlight Fixture	35	0.140	386	4	No Retrofit	35	0.140	386
LAUREL HILL STATE PARK	BEACH CONCESSION STAND & RESTROOM		INTERIOR		WOMENS RESTROOM	7	32 Watt Plug-In CFL 8" Downlight Fixture	35	0.245	676	7	No Retrofit	35	0.245	676
LAUREL HILL STATE PARK	BEACH CONCESSION STAND & RESTROOM		INTERIOR		WOMENS RESTROOM	1	32 Watt Plug-In CFL 8" Downlight Fixture	35	0.035	97	1	No Retrofit	35	0.035	97
LAUREL HILL STATE PARK	BEACH CONCESSION STAND & RESTROOM		INTERIOR		WOMENS RESTROOM-SHOWER	4	32 Watt Plug-In CFL 8" Downlight Fixture	35	0.140	386	4	No Retrofit	35	0.140	386

©2013 Energy Systems Group, LLC

EXISTING FIXTURES											PROPOSED FIXTURE UPGRADE				
Park/Building Name	Building	Building #	Phase	Floor	Room Description	Qty	Description	Watts	kW	kWh	Qty	Description	Watts	kW	kWh
LAUREL HILL STATE PARK	BEACH CONCESSION STAND & RESTROOM		INTERIOR		WOMENS RESTROOM	1	T8 1x4 2-Lamp Vanity Fixture	62	0.062	171	1	Retrofit with (2) 12.5 Watt LED T8 4' Lamps; Direct Wire to Socket	25	0.025	69
LAUREL HILL STATE PARK	BEACH CONCESSION STAND & RESTROOM		INTERIOR		FAMILY RESTROOM	3	32 Watt Plug-In CFL 8" Downlight Fixture	35	0.105	290	3	No Retrofit	35	0.105	290
LAUREL HILL STATE PARK	BEACH CONCESSION STAND & RESTROOM		INTERIOR		FAMILY RESTROOM	1	T8 1x4 2-Lamp Vanity Fixture	62	0.062	171	1	Retrofit with (2) 12.5 Watt LED T8 4' Lamps; Direct Wire to Socket	25	0.025	69
LAUREL HILL STATE PARK	BEACH CONCESSION STAND & RESTROOM		INTERIOR		PIPE CHASE	4	T8 1x4 2-Lamp Vaportight Fixture	62	0.248	248	4	Retrofit with (2) 12.5 Watt LED T8 4' Lamps; Direct Wire to Socket	25	0.100	100
LAUREL HILL STATE PARK	LIFE GUARD BUILDING		INTERIOR		OFFICE	4	T8 1x4 2-Lamp Wrap Fixture	62	0.248	684	4	Retrofit with (2) 12.5 Watt LED T8 4' Lamps; Direct Wire to Socket	25	0.100	276
LAUREL HILL STATE PARK	LIFE GUARD BUILDING		INTERIOR		RESTROOM	1	60 Watt Incandescent A-Lamp Fixture	60	0.060	166	1	Re-Lamp with (1) 10 Watt LED A19	10	0.010	28
LAUREL HILL STATE PARK	LIFE GUARD BUILDING		EXTERIOR		EXTERIOR	2	70 Watt High Pressure Sodium Recessed	95	0.190	832	2	Re-Lamp with (1) 27 Watt LED Omni-Cob Lamp; Hardwire Ballast	27	0.054	237
LAUREL HILL STATE PARK	LIFE GUARD BUILDING		EXTERIOR		EXTERIOR	1	70 Watt High Pressure Sodium Wall Pack Fixture	90	0.090	394	1	New 24 Watt LED Wall Pack Fixture; Non-Dark Sky	25	0.025	110
LAUREL HILL STATE PARK	BOAT RENTAL		INTERIOR		OFFICE	1	13 Watt Compact Fluorescent Fixture	13	0.013	36	1	Re-Lamp with (1) 10 Watt LED A19	10	0.010	28
LAUREL HILL STATE PARK	BOAT RENTAL		INTERIOR		OFFICE	1	65 Watt Incandescent R30 Fixture	65	0.065	179	1	Re-Lamp with (1) 10 Watt LED BR30	10	0.010	28
LAUREL HILL STATE PARK	LAKE VIEW PAVILLION		EXTERIOR		EXTERIOR	4	Circline Fixture; No Retrofit	30	0.120	526	4	No Retrofit	30	0.120	526
LAUREL HILL STATE PARK	LAKE VIEW PAVILLION		EXTERIOR		LOUNGE	5	Circline Fixture; No Retrofit	30	0.150	657	5	No Retrofit	30	0.150	657
LAUREL HILL STATE PARK	BEACH RESTROOM		EXTERIOR		EXTERIOR	2	70 Watt High Pressure Sodium Wall Pack Fixture	90	0.180	788	2	New 24 Watt LED Wall Pack Fixture; Non-Dark Sky	25	0.050	219
LAUREL HILL STATE PARK	BEACH RESTROOM		INTERIOR		PIPE CHASE	2	T8 1x4 2-Lamp Vaportight Fixture	62	0.124	124	2	Retrofit with (2) 12.5 Watt LED T8 4' Lamps; Direct Wire to Socket	25	0.050	50
LAUREL HILL STATE PARK	BEACH RESTROOM		INTERIOR		RESTROOM	2	T8 1x4 2-Lamp Vanity Fixture	62	0.124	342	2	Retrofit with (2) 12.5 Watt LED T8 4' Lamps; Direct Wire to Socket	25	0.050	138
LAUREL HILL STATE PARK	BEACH RESTROOM		INTERIOR		RESTROOM	2	T8 1x4 2-Lamp Vanity Fixture	62	0.124	342	2	Retrofit with (2) 12.5 Watt LED T8 4' Lamps; Direct Wire to Socket	25	0.050	138
LAUREL HILL STATE PARK	BEACH RESTROOM		EXTERIOR		POLE	1	Existing LED Fixture; No Retrofit	40	0.040	175	1	No Retrofit	40	0.040	175
GALLITZIN STATE FOREST	FOREMAN HQ		INTERIOR		FUEL ROOM	1	T8 1x8 2-Lamp Strip Fixture with 59 Watt Lamps	109	0.109	245	1	Retrofit with (4) 12.5 Watt LED T8 4' Lamps and (1) 1x8 4-Lamp Strip Kit; Direct Wire to Socket	50	0.050	112
GALLITZIN STATE FOREST	FOREMAN HQ		INTERIOR		MECHANICAL	1	60 Watt Incandescent A-Lamp Fixture	60	0.060	60	1	Re-Lamp with (1) 10 Watt LED A19	10	0.010	10
GALLITZIN STATE FOREST	FOREMAN HQ		INTERIOR		BREAK ROOM	3	T12 1x4 2-Lamp Industrial Strip Fixture; Turret	72	0.216	486	3	New 1x4 2-Lamp Industrial Fixture with (2) 12.5 Watt LED T8 4' Lamp; Direct Wire to Socket	25	0.075	169
GALLITZIN STATE FOREST	FOREMAN HQ		INTERIOR		RESTROOM	1	T12 2x2 2-Lamp Wrap Fixture	42	0.042	94	1	Retrofit with (2) 10 Watt LED T8 2' Lamps; Direct Wire to Socket	20	0.020	45
GALLITZIN STATE FOREST	FOREMAN HQ		INTERIOR		RESTROOM	1	T12 2x2 2-Lamp U-Lamp Troffer Fixture with 9" Lamps	72	0.072	162	1	Retrofit with (2) 10 Watt LED T8 2' Lamps and (1) 2x2 2-Lamp White Reflector Kit; Direct Wire to Socket	20	0.020	45
GALLITZIN STATE FOREST	FOREMAN HQ		INTERIOR		SHOP	1	T12 1x4 2-Lamp Strip Fixture	72	0.072	162	1	Retrofit with (2) 12.5 Watt LED T8 4' Lamps; Direct Wire to Socket	25	0.025	56
GALLITZIN STATE FOREST	FOREMAN HQ		INTERIOR		SHOP	1	T12 1x4 2-Lamp Industrial Strip Fixture; Turret	72	0.072	162	1	New 1x4 2-Lamp Industrial Fixture with (2) 12.5 Watt LED T8 4' Lamp; Direct Wire to Socket	25	0.025	56
GALLITZIN STATE FOREST	FOREMAN HQ		INTERIOR		SHOP	4	T12HO 1x8 2-Lamp Strip Fixture with 110 Watt Lamps	230	0.920	2,068	4	Retrofit with (4) 12.5 Watt LED T8 4' Lamps and (1) 1x8 4-Lamp Strip Kit; Direct Wire to Socket	50	0.200	450
GALLITZIN STATE FOREST	FOREMAN HQ		INTERIOR		STORAGE	2	T12 1x4 2-Lamp Wrap Fixture	72	0.144	144	2	Retrofit with (2) 12.5 Watt LED T8 4' Lamps; Direct Wire to Socket	25	0.050	50

©2013 Energy Systems Group, LLC

EXISTING FIXTURES											PROPOSED FIXTURE UPGRADE				
Park/Building Name	Building	Building #	Phase	Floor	Room Description	Qty	Description	Watts	kW	kWh	Qty	Description	Watts	kW	kWh
GALLITZIN STATE FOREST	FOREMAN HQ		INTERIOR		ATTIC	4	60 Watt Incandescent A-Lamp Fixture	60	0.240	240	4	Re-Lamp with (1) 10 Watt LED A19	10	0.040	40
GALLITZIN STATE FOREST	FOREMAN HQ		INTERIOR		HALL	1	T12 1x4 2-Lamp Industrial Strip Fixture; Turret	72	0.072	162	1	New 1x4 2-Lamp Industrial Fixture with (2) 12.5 Watt LED T8 4' Lamp; Direct Wire to Socket	25	0.025	56
GALLITZIN STATE FOREST	FOREMAN HQ		INTERIOR		HALL	1	T12HO 1x8 2-Lamp Strip Fixture with 110 Watt Lamps	230	0.230	517	1	Retrofit with (4) 12.5 Watt LED T8 4' Lamps and (1) 1x8 4-Lamp Strip Kit; Direct Wire to Socket	50	0.050	112
GALLITZIN STATE FOREST	FOREMAN HQ		INTERIOR		OFFICE	4	T12 2x4 4-Lamp Surface Mount Fixture	144	0.576	1,295	4	Retrofit with (4) 12.5 Watt LED T8 4' Lamps; Direct Wire to Socket	50	0.200	450
GALLITZIN STATE FOREST	FOREMAN HQ		EXTERIOR		EXTERIOR	1	100 Watt Metal Halide Flood Fixture	125	0.125	548	1	New 26 Watt LED Flood Fixture	27	0.027	118
GALLITZIN STATE FOREST	FOREMAN HQ		EXTERIOR		EXTERIOR	1	60 Watt Incandescent A-Lamp Jelly Jar Fixture	60	0.060	263	1	Re-Lamp with (1) 10 Watt LED A19	10	0.010	44
GALLITZIN STATE FOREST	FOREMAN HQ		EXTERIOR		EXTERIOR	1	150 Watt Mercury Vapor Dusk to Dawn Fixture	188	0.188	823	1	New 26 Watt LED Dusk to Dawn Barnyard Fixture	26	0.026	114
GALLITZIN STATE FOREST	MECHANICS SHOP		INTERIOR		OFFICE	5	T12 2x4 4-Lamp Troffer Fixture	144	0.720	1,619	5	Retrofit with (4) 12.5 Watt LED T8 4' Lamps; Direct Wire to Socket	50	0.250	562
GALLITZIN STATE FOREST	MECHANICS SHOP		INTERIOR		SHOP 1	6	T12HO 1x8 2-Lamp Strip Fixture with 110 Watt Lamps	230	1.380	3,102	6	Retrofit with (4) 12.5 Watt LED T8 4' Lamps and (1) 1x8 4-Lamp Strip Kit; Direct Wire to Socket	50	0.300	674
GALLITZIN STATE FOREST	MECHANICS SHOP		INTERIOR		SHOP 1	1	T12 1x4 2-Lamp Strip Fixture	72	0.072	162	1	Retrofit with (2) 12.5 Watt LED T8 4' Lamps; Direct Wire to Socket	25	0.025	56
GALLITZIN STATE FOREST	MECHANICS SHOP		INTERIOR		SHOP 1	1	T12 1x4 2-Lamp Wrap Fixture	72	0.072	162	1	Retrofit with (2) 12.5 Watt LED T8 4' Lamps; Direct Wire to Socket	25	0.025	56
GALLITZIN STATE FOREST	MECHANICS SHOP		INTERIOR		SHOP 1	10	Existing LED Fixture; No Retrofit	40	0.400	899	10	No Retrofit	40	0.400	899
GALLITZIN STATE FOREST	MECHANICS SHOP		INTERIOR		MECHANICAL	2	Existing LED Fixture; No Retrofit	30	0.060	60	2	No Retrofit	30	0.060	60
GALLITZIN STATE FOREST	MECHANICS SHOP		INTERIOR		RESTROOM	2	Existing LED Fixture; No Retrofit	30	0.060	135	2	No Retrofit	30	0.060	135
GALLITZIN STATE FOREST	MECHANICS SHOP		INTERIOR		TOOL ROOM	2	Existing LED Fixture; No Retrofit	30	0.060	135	2	No Retrofit	30	0.060	135
GALLITZIN STATE FOREST	MECHANICS SHOP		INTERIOR		SHOP 2	7	Existing LED Fixture; No Retrofit	30	0.210	472	7	No Retrofit	30	0.210	472
GALLITZIN STATE FOREST	MECHANICS SHOP		INTERIOR		SHOP 2	12	T12HO 1x8 2-Lamp Strip Fixture with 110 Watt Lamps	230	2.760	6,204	12	Retrofit with (4) 12.5 Watt LED T8 4' Lamps and (1) 1x8 4-Lamp Strip Kit; Direct Wire to Socket	50	0.600	1,349
GALLITZIN STATE FOREST	MECHANICS SHOP		EXTERIOR		EXTERIOR	2	100 Watt Metal Halide Flood Fixture	125	0.250	1,095	2	New 26 Watt LED Flood Fixture	27	0.054	237
GALLITZIN STATE FOREST	MECHANICS SHOP		EXTERIOR		EXTERIOR	1	60 Watt Incandescent A-Lamp Jelly Jar Fixture	60	0.060	263	1	Re-Lamp with (1) 10 Watt LED A19	10	0.010	44
GALLITZIN STATE FOREST	SHOP 1		INTERIOR		STORAGE	3	60 Watt Incandescent A-Lamp Fixture	60	0.180	180	3	Re-Lamp with (1) 10 Watt LED A19	10	0.030	30
GALLITZIN STATE FOREST	SHOP 2		INTERIOR		STORAGE	8	60 Watt Incandescent A-Lamp Fixture	60	0.480	480	8	Re-Lamp with (1) 10 Watt LED A19	10	0.080	80
GALLITZIN STATE FOREST	BLAIR FIRE CONTROL STATION		INTERIOR		HALLWAY	3	T8 1x4 2-Lamp Wrap Fixture	62	0.186	418	3	Retrofit with (2) 12.5 Watt LED T8 4' Lamps; Direct Wire to Socket	25	0.075	169
GALLITZIN STATE FOREST	BLAIR FIRE CONTROL STATION		INTERIOR		MECHANICAL	2	60 Watt Incandescent A-Lamp Fixture	60	0.120	120	2	Re-Lamp with (1) 10 Watt LED A19	10	0.020	20
GALLITZIN STATE FOREST	BLAIR FIRE CONTROL STATION		INTERIOR		RESTROOM	1	T8 1x4 2-Lamp Wrap Fixture	62	0.062	139	1	Retrofit with (2) 12.5 Watt LED T8 4' Lamps; Direct Wire to Socket	25	0.025	56
GALLITZIN STATE FOREST	BLAIR FIRE CONTROL STATION		INTERIOR		RESTROOM	1	T12 2x2 2-Lamp Vanity Fixture	42	0.042	94	1	Retrofit with (2) 10 Watt LED T8 2' Lamps; Direct Wire to Socket	20	0.020	45
GALLITZIN STATE FOREST	BLAIR FIRE CONTROL STATION		INTERIOR		OFFICE	4	T8 1x4 4-Lamp Wrap Fixture	106	0.424	953	4	Retrofit with (4) 12.5 Watt LED T8 4' Lamps; Direct Wire to Socket	50	0.200	450

©2013 Energy Systems Group, LLC

EXISTING FIXTURES										PROPOSED FIXTURE UPGRADE				
Park/Building Name	Building	Building #	Phase	Floor	Room Description	Qty	Description	Watts	kW	kWh	Qty	Description	Watts	kW	kWh
GALLITZIN STATE FOREST	BLAIR FIRE CONTROL STATION		INTERIOR		OPEN OFFICE	6	T8 1x4 4-Lamp Wrap Fixture	106	0.636	1,430	6	Retrofit with (4) 12.5 Watt LED T8 4' Lamps; Direct Wire to Socket	50	0.300	674
GALLITZIN STATE FOREST	BLAIR FIRE CONTROL STATION		INTERIOR		OPEN OFFICE	6	T8 1x4 4-Lamp Wrap Fixture	106	0.636	1,430	6	Retrofit with (4) 12.5 Watt LED T8 4' Lamps; Direct Wire to Socket	50	0.300	674
GALLITZIN STATE FOREST	BLAIR FIRE CONTROL STATION		INTERIOR		TRUCK BAYS	8	T8 1x4 2-Lamp Industrial Strip Fixture; Turret	62	0.496	1,115	8	New 1x4 2-Lamp Industrial Fixture with (2) 12.5 Watt LED T8 4' Lamp; Direct Wire to Socket	25	0.200	450
GALLITZIN STATE FOREST	BLAIR FIRE CONTROL STATION		INTERIOR		STORAGE	5	T8 1x4 2-Lamp Industrial Strip Fixture; Turret	62	0.310	310	5	New 1x4 2-Lamp Industrial Fixture with (2) 12.5 Watt LED T8 4' Lamp; Direct Wire to Socket	25	0.125	125
GALLITZIN STATE FOREST	BLAIR FIRE CONTROL STATION		INTERIOR		STORAGE	5	T8 1x4 2-Lamp Industrial Strip Fixture; Turret	62	0.310	310	5	New 1x4 2-Lamp Industrial Fixture with (2) 12.5 Watt LED T8 4' Lamp; Direct Wire to Socket	25	0.125	125
GALLITZIN STATE FOREST	BLAIR FIRE CONTROL STATION		INTERIOR		BENCH	1	T12 1x4 2-Lamp Strip Fixture	72	0.072	162	1	Retrofit with (2) 12.5 Watt LED T8 4' Lamps; Direct Wire to Socket	25	0.025	56
GALLITZIN STATE FOREST	BLAIR FIRE CONTROL STATION		INTERIOR		BENCH	1	T12 1x4 1-Lamp Wrap Fixture	43	0.043	97	1	Retrofit with (1) 12.5 Watt LED T8 4' Lamps; Direct Wire to Socket	12.5	0.013	28
GALLITZIN STATE FOREST	BLAIR FIRE CONTROL STATION		INTERIOR		BENCH	2	T8 1x4 2-Lamp Strip Fixture	62	0.124	279	2	Retrofit with (2) 12.5 Watt LED T8 4' Lamps; Direct Wire to Socket	25	0.050	112
GALLITZIN STATE FOREST	BLAIR FIRE CONTROL STATION		INTERIOR		BENCH	1	T8 1x4 2-Lamp Industrial Strip Fixture; Turret	62	0.062	139	1	New 1x4 2-Lamp Industrial Fixture with (2) 12.5 Watt LED T8 4' Lamp; Direct Wire to Socket	25	0.025	56
GALLITZIN STATE FOREST	BLAIR FIRE CONTROL STATION		EXTERIOR		FRONT AND BACK	2	60 Watt Incandescent Canopy Fixture	60	0.120	526	2	New 10 Watt LED Canopy Fixture	12	0.024	105
GALLITZIN STATE FOREST	BLAIR FIRE CONTROL STATION		EXTERIOR		FRONT AND BACK	12	65 Watt Incandescent PAR38	65	0.780	3,416	12	Re-Lamp with (1) 17 Watt LED PAR38	17	0.204	894
GALLITZIN STATE FOREST	BLAIR FIRE CONTROL STATION		EXTERIOR		FRONT AND BACK	1	26 Watt Plug-In CFL Jelly Jar	29	0.029	127	1	New 13 Watt LED Jelly Jar Fixture	15	0.015	66
GALLITZIN STATE FOREST	BLAIR FIRE CONTROL STATION		EXTERIOR		FRONT AND BACK	1	100 Watt High Pressure Sodium Dusk to Dawn Fixture	125	0.125	548	1	New 26 Watt LED Dusk to Dawn Barnyard Fixture	26	0.026	114
YELLOW CREEK	PARK RESIDENCE		EXTERIOR		EXTERIOR	1	16 Watt Compact Fluorescent PAR38	16	0.016	70	1	Re-Lamp with (1) 17 Watt LED PAR38	17	0.017	74
YELLOW CREEK	PARK RESIDENCE		EXTERIOR		EXTERIOR	3	65 Watt Incandescent PAR38	65	0.195	854	3	Re-Lamp with (1) 17 Watt LED PAR38	17	0.051	223
YELLOW CREEK	PARK RESIDENCE		EXTERIOR		EXTERIOR	2	13 Watt Compact Fluorescent Fixture	13	0.026	114	2	Re-Lamp with (1) 10 Watt LED A19	10	0.020	88
YELLOW CREEK	PARK RESIDENCE		EXTERIOR		EXTERIOR	1	300 Watt Quartz Flood Fixture	300	0.300	1,314	1	New 52 Watt LED Flood Fixture	54	0.054	237
YELLOW CREEK	PARK RESIDENCE		EXTERIOR		EXTERIOR	1	60 Watt Incandescent A-Lamp Fixture	60	0.060	263	1	Re-Lamp with (1) 10 Watt LED A19	10	0.010	44
YELLOW CREEK	PARK RESIDENCE		EXTERIOR		EXTERIOR	2	65 Watt Incandescent PAR38	65	0.130	569	2	Re-Lamp with (1) 17 Watt LED PAR38	17	0.034	149
YELLOW CREEK	PARK RESIDENCE		EXTERIOR		EXTERIOR	2	60 Watt Incandescent 2-Lamp Candelabra Fixture	120	0.240	1,051	2	Re-Lamp with (2) 10 Watt LED A19	20	0.040	175
YELLOW CREEK	PARK RESIDENCE		INTERIOR		DINING	1	13 Watt Compact Fluorescent 3-Lamp Fixture	39	0.039	144	1	Re-Lamp with (3) 10 Watt LED A19	30	0.030	111
YELLOW CREEK	PARK RESIDENCE		INTERIOR		KITCHEN	1	13 Watt Compact Fluorescent Fixture	13	0.013	48	1	Re-Lamp with (1) 10 Watt LED A19	10	0.010	37
YELLOW CREEK	PARK RESIDENCE		INTERIOR		KITCHEN	1	13 Watt Compact Fluorescent Fixture	13	0.013	48	1	Re-Lamp with (1) 10 Watt LED A19	10	0.010	37
YELLOW CREEK	PARK RESIDENCE		INTERIOR		KITCHEN	2	Existing LED Fixture; No Retrofit	10	0.020	74	2	No Retrofit	10	0.020	74
YELLOW CREEK	PARK RESIDENCE		INTERIOR		KITCHEN	2	13 Watt Compact Fluorescent Downlight	13	0.026	96	2	Re-Lamp with (1) 10 Watt LED BR30	10	0.020	74
YELLOW CREEK	PARK RESIDENCE		INTERIOR		KITCHEN	1	T8 2x3 2-Lamp Vanity Fixture	49	0.049	181	1	Retrofit with (2) 12 Watt LED T8 3' Lamps; Direct Wire to Socket	24	0.024	89

©2013 Energy Systems Group, LLC

EXISTING FIXTURES											PROPOSED FIXTURE UPGRADE				
Park/Building Name	Building	Building #	Phase	Floor	Room Description	Qty	Description	Watts	kW	kWh	Qty	Description	Watts	kW	kWh
YELLOW CREEK	PARK RESIDENCE		INTERIOR		OLD PORCH ROOM	4	Existing LED Fixture; No Retrofit	10	0.040	148	4	No Retrofit	10	0.040	148
YELLOW CREEK	PARK RESIDENCE		INTERIOR		OLD PORCH ROOM	1	13 Watt Compact Fluorescent 3-Lamp Fixture	39	0.039	144	1	Re-Lamp with (3) 10 Watt LED A19	30	0.030	111
YELLOW CREEK	PARK RESIDENCE		INTERIOR		OLD PORCH ROOM	5	Existing LED Fixture; No Retrofit	10	0.050	185	5	No Retrofit	10	0.050	185
YELLOW CREEK	PARK RESIDENCE		INTERIOR		HALL	2	60 Watt Incandescent Candelabra Fixture	60	0.120	444	2	Re-Lamp with (1) 5 Watt LED Candelabra	5	0.010	37
YELLOW CREEK	PARK RESIDENCE		INTERIOR		2ND HALL	1	Existing LED Fixture; No Retrofit	10	0.010	37	1	No Retrofit	10	0.010	37
YELLOW CREEK	PARK RESIDENCE		INTERIOR		2ND HALL	1	Existing LED Fixture; No Retrofit	10	0.010	37	1	No Retrofit	10	0.010	37
YELLOW CREEK	PARK RESIDENCE		INTERIOR		RESTROOM	1	T8 1x4 2-Lamp Vanity Fixture	62	0.062	230	1	Retrofit with (2) 12.5 Watt LED T8 4' Lamps; Direct Wire to Socket	25	0.025	93
YELLOW CREEK	PARK RESIDENCE		INTERIOR		RESTROOM	1	Existing LED Fixture; No Retrofit	10	0.010	37	1	No Retrofit	10	0.010	37
YELLOW CREEK	PARK RESIDENCE		INTERIOR		RESTROOM	1	60 Watt Incandescent Canopy Fixture	60	0.060	222	1	New 10 Watt LED Canopy Fixture	12	0.012	44
YELLOW CREEK	PARK RESIDENCE		INTERIOR		CLOSET	1	Existing LED Fixture; No Retrofit	10	0.010	10	1	No Retrofit	10	0.010	10
YELLOW CREEK	PARK RESIDENCE		INTERIOR		LAUNDRY / TOY ROOM	1	40 Watt Incandescent Candelabra Fixture	40	0.040	148	1	Re-Lamp with (1) 5 Watt LED Candelabra	5	0.005	19
YELLOW CREEK	PARK RESIDENCE		INTERIOR		CLOSET	1	40 Watt Incandescent A-Lamp Fixture	40	0.040	40	1	Re-Lamp with (1) 7 Watt LED A19	7	0.007	7
YELLOW CREEK	PARK RESIDENCE		INTERIOR		RESTROOM	1	T8 1x4 2-Lamp Vanity Fixture	62	0.062	230	1	Retrofit with (2) 12.5 Watt LED T8 4' Lamps; Direct Wire to Socket	25	0.025	93
YELLOW CREEK	PARK RESIDENCE		INTERIOR		RESTROOM	1	60 Watt Incandescent A-Lamp Fixture	60	0.060	222	1	Re-Lamp with (1) 10 Watt LED A19	10	0.010	37
YELLOW CREEK	PARK RESIDENCE		INTERIOR		UPSTAIRS HALL	2	13 Watt Compact Fluorescent Fixture	13	0.026	96	2	Re-Lamp with (1) 10 Watt LED A19	10	0.020	74
YELLOW CREEK	PARK RESIDENCE		INTERIOR		BEDROOM	1	40 Watt Incandescent 4-Lamp Candelabra Fixture	160	0.160	593	1	Re-Lamp with (4) 5 Watt LED Candelabra	20	0.020	74
YELLOW CREEK	PARK RESIDENCE		INTERIOR		BEDROOM	1	60 Watt Incandescent A-Lamp Fixture	60	0.060	222	1	Re-Lamp with (1) 10 Watt LED A19	10	0.010	37
YELLOW CREEK	PARK RESIDENCE		INTERIOR		BATH	1	13 Watt Compact Fluorescent 2-Lamp Fixture	26	0.026	96	1	Re-Lamp with (2) 10 Watt LED A19	20	0.020	74
YELLOW CREEK	PARK RESIDENCE		INTERIOR		BEDROOM	1	40 Watt Incandescent 3-Lamp Candelabra Fixture	120	0.120	444	1	Re-Lamp with (3) 5 Watt LED Candelabra	15	0.015	56
YELLOW CREEK	PARK RESIDENCE		INTERIOR		BEDROOM	1	13 Watt Compact Fluorescent Fixture	13	0.013	48	1	Re-Lamp with (1) 10 Watt LED A19	10	0.010	37
YELLOW CREEK	PARK RESIDENCE		INTERIOR		MASTER BEDROOM	1	40 Watt Incandescent 4-Lamp Candelabra Fixture	160	0.160	593	1	Re-Lamp with (4) 5 Watt LED Candelabra	20	0.020	74
YELLOW CREEK	PARK RESIDENCE		INTERIOR		CLOSET	1	40 Watt Incandescent A-Lamp Fixture	40	0.040	40	1	Re-Lamp with (1) 7 Watt LED A19	7	0.007	7
YELLOW CREEK	PARK RESIDENCE		INTERIOR		OFFICE	1	40 Watt Incandescent 3-Lamp Candelabra Fixture	120	0.120	444	1	Re-Lamp with (3) 5 Watt LED Candelabra	15	0.015	56
YELLOW CREEK	PARK RESIDENCE		INTERIOR		BATH	1	T8 1x2 2-Lamp Vanity Fixture	36	0.036	133	1	Retrofit with (2) 10 Watt LED T8 2' Lamps; Direct Wire to Socket	20	0.020	74
YELLOW CREEK	PARK RESIDENCE		INTERIOR		BED	1	40 Watt Incandescent 3-Lamp Candelabra Fixture	120	0.120	444	1	Re-Lamp with (3) 5 Watt LED Candelabra	15	0.015	56
YELLOW CREEK	PARK RESIDENCE		INTERIOR		CLOSET	1	40 Watt Incandescent A-Lamp Fixture	40	0.040	40	1	Re-Lamp with (1) 7 Watt LED A19	7	0.007	7

©2013 Energy Systems Group, LLC



EXISTING FIXTURES											PROPOSED FIXTURE UPGRADE				
Park/Building Name	Building	Building #	Phase	Floor	Room Description	Qty	Description	Watts	kW	kWh	Qty	Description	Watts	kW	kWh
YELLOW CREEK	PARK RESIDENCE		INTERIOR		UPSTAIRS HALL	1	40 Watt Incandescent 3-Lamp Candelabra Fixture	120	0.120	444	1	Re-Lamp with (3) 5 Watt LED Candelabra	15	0.015	56
YELLOW CREEK	PARK RESIDENCE		INTERIOR		BASEMENT	1	Existing LED Fixture; No Retrofit	10	0.010	37	1	No Retrofit	10	0.010	37
YELLOW CREEK	PARK RESIDENCE		INTERIOR		STAIR	2	T8 1x4 2-Lamp Strip Fixture	62	0.124	459	2	Retrofit with (2) 12.5 Watt LED T8 4' Lamps; Direct Wire to Socket	25	0.050	185
YELLOW CREEK	PARK RESIDENCE		INTERIOR		BASEMENT	5	Existing LED Fixture; No Retrofit	10	0.050	185	5	No Retrofit	10	0.050	185
YELLOW CREEK	PARK RESIDENCE		INTERIOR		BASEMENT	4	40 Watt Incandescent R20	40	0.160	593	4	Re-Lamp with (1) 8 Watt LED BR20	8	0.032	119
YELLOW CREEK	PARK RESIDENCE		INTERIOR		BASEMENT	1	50 Watt Incandescent MR16 Fixture	50	0.050	185	1	Re-Lamp with (1) 7 Watt LED MR16	7	0.007	26
YELLOW CREEK	PARK RESIDENCE		INTERIOR		BASEMENT	2	13 Watt Compact Fluorescent Fixture	13	0.026	96	2	Re-Lamp with (1) 10 Watt LED A19	10	0.020	74
YELLOW CREEK	PARK RESIDENCE		INTERIOR		BASEMENT	1	Existing LED Fixture; No Retrofit	10	0.010	37	1	No Retrofit	10	0.010	37
YELLOW CREEK	PARK OFFICE		INTERIOR		LOBBY / OFFICE	1	13 Watt Compact Fluorescent 4-Lamp Fixture	52	0.052	117	1	Re-Lamp with (4) 10 Watt LED A19	40	0.040	90
YELLOW CREEK	PARK OFFICE		INTERIOR		LOBBY / OFFICE	1	13 Watt Compact Fluorescent 2-Lamp Fixture	26	0.026	58	1	Re-Lamp with (2) 10 Watt LED A19	20	0.020	45
YELLOW CREEK	PARK OFFICE		INTERIOR		LOBBY / OFFICE	6	T8 1x4 2-Lamp Wrap Fixture	62	0.372	836	6	Retrofit with (2) 12.5 Watt LED T8 4' Lamps; Direct Wire to Socket	25	0.150	337
YELLOW CREEK	PARK OFFICE		INTERIOR		LOBBY / OFFICE	2	T8 2x3 1-Lamp Under Cabinet Wrap Fixture	22	0.044	99	2	No Retrofit	22	0.044	99
YELLOW CREEK	PARK OFFICE		INTERIOR		LOBBY / OFFICE	1	T8 2x2 1-Lamp Under Cabinet Wrap Fixture	22	0.022	49	1	No Retrofit	22	0.022	49
YELLOW CREEK	PARK OFFICE		INTERIOR		CONFERENCE / COPY	6	T12 1x4 2-Lamp Wrap Fixture; Damaged	72	0.432	971	6	New 1x4 2-Lamp Wrap Fixture with (2) 12.5 Watt LED T8 4' Lamp; Direct Wire to Socket	25	0.150	337
YELLOW CREEK	PARK OFFICE		INTERIOR		OFFICE	6	T8 1x4 2-Lamp Wrap Fixture	62	0.372	836	6	Retrofit with (2) 12.5 Watt LED T8 4' Lamps; Direct Wire to Socket	25	0.150	337
YELLOW CREEK	PARK OFFICE		INTERIOR		RESTROOM	1	60 Watt Incandescent Globe Fixture	60	0.060	135	1	Re-Lamp with (1) 8 Watt LED G25 Globe	8	0.008	18
YELLOW CREEK	PARK OFFICE		INTERIOR		HALL	1	T5 1x4 1-Lamp Wrap Fixture	23	0.023	52	1	No Retrofit	23	0.023	52
YELLOW CREEK	PARK OFFICE		INTERIOR		STAFF RESTROOM	1	60 Watt Incandescent Globe Fixture	60	0.060	135	1	Re-Lamp with (1) 8 Watt LED G25 Globe	8	0.008	18
YELLOW CREEK	PARK OFFICE		INTERIOR		STAFF RESTROOM	1	60 Watt Incandescent 2-Lamp Fixture	120	0.120	270	1	Re-Lamp with (2) 10 Watt LED A19	20	0.020	45
YELLOW CREEK	PARK OFFICE		INTERIOR		BREAK ROOM	2	T8 1x4 2-Lamp Strip Fixture	62	0.124	279	2	Retrofit with (2) 12.5 Watt LED T8 4' Lamps; Direct Wire to Socket	25	0.050	112
YELLOW CREEK	PARK OFFICE		EXTERIOR		EXTERIOR FRONT	1	100 Watt Mercury Vapor Wall Pack Fixture	130	0.130	569	1	New 24 Watt LED Wall Pack Fixture; Non-Dark Sky	25	0.025	110
YELLOW CREEK	PARK OFFICE		EXTERIOR		PAVILLION	2	60 Watt Incandescent A-Lamp Downlight Fixture	60	0.120	526	2	Re-Lamp with (1) 10 Watt LED BR30	10	0.020	88
YELLOW CREEK	PARK OFFICE		EXTERIOR		BACK	1	60 Watt Incandescent 2-Lamp Canopy	120	0.120	526	1	New 10 Watt LED Canopy Fixture	10	0.010	44
YELLOW CREEK	MAINTENANCE BUILDING - MAIN		INTERIOR		HALL	1	T8 1x4 2-Lamp Wrap Fixture	62	0.062	161	1	Retrofit with (2) 12.5 Watt LED T8 4' Lamps; Direct Wire to Socket	25	0.025	65
YELLOW CREEK	MAINTENANCE BUILDING - MAIN		INTERIOR		OFFICE	1	T8 1x4 2-Lamp Wrap Fixture	62	0.062	161	1	Retrofit with (2) 12.5 Watt LED T8 4' Lamps; Direct Wire to Socket	25	0.025	65
YELLOW CREEK	MAINTENANCE BUILDING - MAIN		INTERIOR		BREAK ROOM	2	T8 1x4 2-Lamp Wrap Fixture	62	0.124	323	2	Retrofit with (2) 12.5 Watt LED T8 4' Lamps; Direct Wire to Socket	25	0.050	130

©2013 Energy Systems Group, LLC

EXISTING FIXTURES												PROPOSED FIXTURE UPGRADE				
Park/Building Name	Building	Building #	Phase	Floor	Room Description	Qty	Description	Watts	kW	kWh	Qty	Description	Watts	kW	kWh
YELLOW CREEK	MAINTENANCE BUILDING - MAIN		INTERIOR		CARPENTRY SHOP	15	T8 1x4 2-Lamp Industrial Strip Fixture; Turret	62	0.930	2,419	15	New 1x4 2-Lamp Industrial Fixture with (2) 12.5 Watt LED T8 4' Lamp; Direct Wire to Socket	25	0.375	975
YELLOW CREEK	MAINTENANCE BUILDING - MAIN		INTERIOR		STROAGE CLOSET	1	T12 1x4 2-Lamp Wrap Fixture	72	0.072	72	1	Retrofit with (2) 12.5 Watt LED T8 4' Lamps; Direct Wire to Socket	25	0.025	25
YELLOW CREEK	MAINTENANCE BUILDING - MAIN		INTERIOR		STORAGE BAY	6	T8 1x4 2-Lamp Industrial Strip Fixture; Turret	62	0.372	968	6	New 1x4 2-Lamp Industrial Fixture with (2) 12.5 Watt LED T8 4' Lamp; Direct Wire to Socket	25	0.150	390
YELLOW CREEK	MAINTENANCE BUILDING - MAIN		INTERIOR		RESTROOM	1	T8 1x4 2-Lamp Wrap Fixture	62	0.062	161	1	Retrofit with (2) 12.5 Watt LED T8 4' Lamps; Direct Wire to Socket	25	0.025	65
YELLOW CREEK	MAINTENANCE BUILDING - MAIN		INTERIOR		MECHANICAL	3	T8 1x4 2-Lamp Wrap Fixture	62	0.186	186	3	Retrofit with (2) 12.5 Watt LED T8 4' Lamps; Direct Wire to Socket	25	0.075	75
YELLOW CREEK	MAINTENANCE BUILDING - MAIN		INTERIOR		HALL	1	T8 1x4 2-Lamp Wrap Fixture	62	0.062	161	1	Retrofit with (2) 12.5 Watt LED T8 4' Lamps; Direct Wire to Socket	25	0.025	65
YELLOW CREEK	MAINTENANCE BUILDING - MAIN		INTERIOR		TRUCK BAYS	15	T12 1x4 2-Lamp Industrial Strip Fixture; Turret	72	1.080	2,809	15	New 1x4 2-Lamp Industrial Fixture with (2) 12.5 Watt LED T8 4' Lamp; Direct Wire to Socket	25	0.375	975
YELLOW CREEK	MAINTENANCE BUILDING - MAIN		EXTERIOR		FRONT	2	100 Watt High Pressure Sodium Wall Pack Fixture	125	0.250	1,095	2	New 24 Watt LED Wall Pack Fixture; Non-Dark Sky	25	0.050	219
YELLOW CREEK	MAINTENANCE BUILDING - MAIN		EXTERIOR		RIGHT	1	100 Watt High Pressure Sodium Wall Pack Fixture	125	0.125	548	1	New 24 Watt LED Wall Pack Fixture; Non-Dark Sky	25	0.025	110
YELLOW CREEK	MAINTENANCE BUILDING - MAIN		EXTERIOR		BACK	1	100 Watt High Pressure Sodium Wall Pack Fixture	125	0.125	548	1	New 24 Watt LED Wall Pack Fixture; Non-Dark Sky	25	0.025	110
YELLOW CREEK	MAINTENANCE BUILDING - MAIN		EXTERIOR		LEFT	1	100 Watt High Pressure Sodium Wall Pack Fixture	125	0.125	548	1	New 24 Watt LED Wall Pack Fixture; Non-Dark Sky	25	0.025	110
YELLOW CREEK	MAINTENANCE BUILDING - MAIN		INTERIOR		STORAGE IN TRUCK BAY	1	T12 1x4 2-Lamp Wrap Fixture	72	0.072	72	1	Retrofit with (2) 12.5 Watt LED T8 4' Lamps; Direct Wire to Socket	25	0.025	25
YELLOW CREEK	MAINTENANCE STORAGE BUILDING		INTERIOR		TRUCK BAY	15	T12 1x4 2-Lamp Industrial Strip Fixture	72	1.080	2,809	15	Retrofit with (2) 12.5 Watt LED T8 4' Lamps; Direct Wire to Socket	25	0.375	975
YELLOW CREEK	MAINTENANCE STORAGE BUILDING		INTERIOR		STORAGE BAY 1	17	T12 1x4 2-Lamp Industrial Strip Fixture	72	1.224	3,184	17	Retrofit with (2) 12.5 Watt LED T8 4' Lamps; Direct Wire to Socket	25	0.425	1,105
YELLOW CREEK	MAINTENANCE STORAGE BUILDING		INTERIOR		STORAGE BAY 2	7	T12 1x4 2-Lamp Industrial Strip Fixture	72	0.504	1,311	7	Retrofit with (2) 12.5 Watt LED T8 4' Lamps; Direct Wire to Socket	25	0.175	455
YELLOW CREEK	MAINTENANCE STORAGE BUILDING		EXTERIOR		FRONT	2	100 Watt High Pressure Sodium Wall Pack Fixture	125	0.250	1,095	2	New 24 Watt LED Wall Pack Fixture; Non-Dark Sky	25	0.050	219
YELLOW CREEK	MAINTENANCE STORAGE BUILDING		EXTERIOR		RIGHT	1	100 Watt High Pressure Sodium Wall Pack Fixture	125	0.125	548	1	New 24 Watt LED Wall Pack Fixture; Non-Dark Sky	25	0.025	110
YELLOW CREEK	MAINTENANCE STORAGE BUILDING		EXTERIOR		LEFT	1	100 Watt High Pressure Sodium Wall Pack Fixture	125	0.125	548	1	New 24 Watt LED Wall Pack Fixture; Non-Dark Sky	25	0.025	110
YELLOW CREEK	LEARNING CENTER-ENVIRONMENTAL LEARNING CLASS ROOM		INTERIOR		CLASS ROOM	8	13 Watt Compact Fluoresent Downlight	13	0.104	230	8	Re-Lamp with (1) 10 Watt LED BR30	10	0.080	177
YELLOW CREEK	LEARNING CENTER-ENVIRONMENTAL LEARNING CLASS ROOM		INTERIOR		OPEN OFFICE / KITCHEN	5	13 Watt Compact Fluoresent Downlight; Difficult Access	13	0.065	144	5	Relamp with (1) 10 Watt LED BR30; Difficult Access	10	0.050	111
YELLOW CREEK	LEARNING CENTER-ENVIRONMENTAL LEARNING CLASS ROOM		INTERIOR		OPEN OFFICE / KITCHEN	3	13 Watt Compact Fluoresent Downlight; Difficult Access	13	0.039	86	3	Relamp with (1) 10 Watt LED BR30; Difficult Access	10	0.030	66
YELLOW CREEK	LEARNING CENTER-ENVIRONMENTAL LEARNING CLASS ROOM		INTERIOR		RESTROOM	1	13 Watt Compact Fluoresent Fixture	13	0.013	29	1	Re-Lamp with (1) 10 Watt LED A19	10	0.010	22
YELLOW CREEK	LEARNING CENTER-ENVIRONMENTAL LEARNING CLASS ROOM		INTERIOR		UPSTAIRS OFFICE	8	13 Watt Compact Fluoresent Downlight	13	0.104	230	8	Re-Lamp with (1) 10 Watt LED BR30	10	0.080	177
YELLOW CREEK	LEARNING CENTER-ENVIRONMENTAL LEARNING CLASS ROOM		INTERIOR		CRAWL SPACE	1	T12 1x4 1-Lamp Strip Fixture	43	0.043	43	1	Retrofit with (1) 12.5 Watt LED T8 4' Lamps; Direct Wire to Socket	12.5	0.013	13
YELLOW CREEK	LEARNING CENTER-ENVIRONMENTAL LEARNING CLASS ROOM		EXTERIOR		LEFT	3	13 Watt Compact Fluoresent Downlight	13	0.039	171	3	Re-Lamp with (1) 10 Watt LED BR30	10	0.030	131
YELLOW CREEK	LEARNING CENTER-ENVIRONMENTAL LEARNING CLASS ROOM		EXTERIOR		FRONT	1	13 Watt Compact Fluoresent Downlight	13	0.013	57	1	Re-Lamp with (1) 10 Watt LED BR30	10	0.010	44

©2013 Energy Systems Group, LLC

EXISTING FIXTURES											PROPOSED FIXTURE UPGRADE				
Park/Building Name	Building	Building #	Phase	Floor	Room Description	Qty	Description	Watts	kW	kWh	Qty	Description	Watts	kW	kWh
YELLOW CREEK	LEARNING CENTER-ENVIROMENTAL LEARNING CLASS ROOM		INTERIOR		BASEMENT	5	T12 1x4 2-Lamp Industrial Strip Fixture	72	0.360	796	5	Retrofit with (2) 12.5 Watt LED T8 4' Lamps; Direct Wire to Socket	25	0.125	276
YELLOW CREEK	LEARNING CENTER-ENVIROMENTAL LEARNING CLASS ROOM		INTERIOR		BASEMENT	1	T8 1x4 1-Lamp Strip Fixture	30	0.030	66	1	Retrofit with (1) 12.5 Watt LED T8 4' Lamps; Direct Wire to Socket	12.5	0.013	28
YELLOW CREEK	LEARNING CENTER-ENVIROMENTAL LEARNING CLASS ROOM		EXTERIOR		PARKING DRIVE LANE	2	250 Watt Metal Halide Shoebox Fixture	295	0.590	2,584	2	New 125 Watt LED Shoebox Fixture	134	0.268	1,174
YELLOW CREEK	COMFORT STATION #2 - LAKEVIEW PAVILLION		INTERIOR		WOMENS RESTROOM	3	13 Watt Compact Fluorescent 2-Lamp Canopy	26	0.078	215	3	Re-Lamp with (2) 10 Watt LED A19	20	0.060	166
YELLOW CREEK	COMFORT STATION #2 - LAKEVIEW PAVILLION		INTERIOR		MENS RESTROOM	1	13 Watt Compact Fluorescent 2-Lamp Canopy	26	0.026	72	1	Re-Lamp with (2) 10 Watt LED A19	20	0.020	55
YELLOW CREEK	COMFORT STATION #2 - LAKEVIEW PAVILLION		INTERIOR		MENS RESTROOM	2	Existing LED Fixture; No Retrofit	20	0.040	110	2	No Retrofit	20	0.040	110
YELLOW CREEK	COMFORT STATION #2 - LAKEVIEW PAVILLION		INTERIOR		CLOSET	1	13 Watt Compact Fluorescent 2-Lamp Canopy	26	0.026	26	1	Re-Lamp with (2) 10 Watt LED A19	20	0.020	20
YELLOW CREEK	COMFORT STATION #2 - LAKEVIEW PAVILLION		INTERIOR		PIPE CHASE	1	60 Watt Incandescent A-Lamp Fixture	60	0.060	60	1	Re-Lamp with (1) 10 Watt LED A19	10	0.010	10
YELLOW CREEK	COMFORT STATION #2 - LAKEVIEW PAVILLION		EXTERIOR		EXTERIOR	2	Existing LED Fixture; No Retrofit	40	0.080	350	2	No Retrofit	40	0.080	350
YELLOW CREEK	BOAT CONCESSION		INTERIOR		RENTAL OFFICE	3	T12 1x4 2-Lamp Egg Crate Fixture	72	0.216	311	3	New 1x4 2-Lamp Wrap Fixture with (2) 12.5 Watt LED T8 4' Lamp; Direct Wire to Socket	25	0.075	108
YELLOW CREEK	BOAT CONCESSION		INTERIOR		BOAT STORAGE	6	T12 1x4 2-Lamp Egg Crate Fixture	72	0.432	432	6	New 1x4 2-Lamp Wrap Fixture with (2) 12.5 Watt LED T8 4' Lamp; Direct Wire to Socket	25	0.150	150
YELLOW CREEK	BOAT CONCESSION		INTERIOR		RESTROOM	1	60 Watt Incandescent 2-Lamp Canopy	120	0.120	173	1	Re-Lamp with (2) 10 Watt LED A19	20	0.020	29
YELLOW CREEK	BOAT CONCESSION		EXTERIOR		EXTERIOR	1	Existing LED Fixture; No Retrofit	40	0.040	175	1	No Retrofit	40	0.040	175
YELLOW CREEK	BOAT CONCESSION		EXTERIOR		EXTERIOR	1	150 Watt Mercury Vapor Dusk to Dawn Fixture	188	0.188	823	1	New 26 Watt LED Dusk to Dawn Barnyard Fixture	26	0.026	114
YELLOW CREEK	SOUTH BOAT LAUNCH		EXTERIOR		EXTERIOR	1	Existing LED Fixture; No Retrofit	40	0.040	175	1	No Retrofit	40	0.040	175
YELLOW CREEK	SAILING BUILDING		EXTERIOR		EXTERIOR	1	300 Watt Quartz Flood Fixture	300	0.300	1,314	1	New 52 Watt LED Flood Fixture	54	0.054	237
YELLOW CREEK	SAILING BUILDING		EXTERIOR		EXTERIOR	2	65 Watt Incandescent PAR38	65	0.130	569	2	Re-Lamp with (1) 17 Watt LED PAR38	17	0.034	149
YELLOW CREEK	SAILING BUILDING		EXTERIOR		EXTERIOR	2	100 Watt Mercury Vapor Wall Pack Fixture	130	0.260	1,139	2	New 24 Watt LED Wall Pack Fixture; Non-Dark Sky	25	0.050	219
YELLOW CREEK	SAILING BUILDING		INTERIOR		BOAT STORAGE	6	T12 1x4 2-Lamp Wrap Fixture; Damaged	72	0.432	432	6	New 1x4 2-Lamp Wrap Fixture with (2) 12.5 Watt LED T8 4' Lamp; Direct Wire to Socket	25	0.150	150
YELLOW CREEK	SAILING BUILDING		INTERIOR		CLOSET	1	60 Watt Incandescent A-Lamp Fixture	60	0.060	60	1	Re-Lamp with (1) 10 Watt LED A19	10	0.010	10
YELLOW CREEK	WATER TREATMENT BUILDING		INTERIOR		PUMP ROOM	10	65 Watt Incandescent R30 RLM Fixture	65	0.650	1,691	10	Re-Lamp with (1) 10 Watt LED A19	10	0.100	260
YELLOW CREEK	WATER TREATMENT BUILDING		EXTERIOR		EXTERIOR	2	35 Watt High Pressure Sodium Wall Pack Fixture	50	0.100	438	2	New 12 Watt LED Wall Pack Fixture	14	0.028	123
YELLOW CREEK	YURT A		INTERIOR		INTERIOR	1	65 Watt Incandescent R30 3-Lamp Fixture	195	0.195	722	1	Relamp with (3) 10 Watt LED BR30	30	0.030	111
YELLOW CREEK	YURT A		INTERIOR		KITCHEN	1	T8 2x2 1-Lamp Under Cabinet Wrap Fixture	22	0.022	81	1	No Retrofit	22	0.022	81
YELLOW CREEK	YURT A		INTERIOR		LAMPS	2	23 Watt Compact Fluorescent Fixture	23	0.046	170	2	Re-Lamp with (1) 10 Watt LED A19	10	0.020	74
YELLOW CREEK	YURT A		EXTERIOR		EXTERIOR	1	Existing LED Fixture; No Retrofit	40	0.040	175	1	No Retrofit	40	0.040	175

©2013 Energy Systems Group, LLC



EXISTING FIXTURES											PROPOSED FIXTURE UPGRADE				
Park/Building Name	Building	Building #	Phase	Floor	Room Description	Qty	Description	Watts	kW	kWh	Qty	Description	Watts	kW	kWh
YELLOW CREEK	YURT B		INTERIOR		INTERIOR	1	65 Watt Incandescent R30 3-Lamp Fixture	195	0.195	722	1	Relamp with (3) 10 Watt LED BR30	30	0.030	111
YELLOW CREEK	YURT B		INTERIOR		KITCHEN	1	T8 2x2 1-Lamp Under Cabinet Wrap Fixture	22	0.022	81	1	No Retrofit	22	0.022	81
YELLOW CREEK	YURT B		INTERIOR		LAMPS	2	23 Watt Compact Fluorescent Fixture	23	0.046	170	2	Re-Lamp with (1) 10 Watt LED A19	10	0.020	74
YELLOW CREEK	YURT B		EXTERIOR		EXTERIOR	1	Existing LED Fixture; No Retrofit	40	0.040	175	1	No Retrofit	40	0.040	175
YELLOW CREEK	YURT C		INTERIOR		INTERIOR	1	65 Watt Incandescent R30 3-Lamp Fixture	195	0.195	722	1	Relamp with (3) 10 Watt LED BR30	30	0.030	111
YELLOW CREEK	YURT C		INTERIOR		KITCHEN	1	T8 2x2 1-Lamp Under Cabinet Wrap Fixture	22	0.022	81	1	No Retrofit	22	0.022	81
YELLOW CREEK	YURT C		INTERIOR		LAMPS	2	23 Watt Compact Fluorescent Fixture	23	0.046	170	2	Re-Lamp with (1) 10 Watt LED A19	10	0.020	74
YELLOW CREEK	YURT C		EXTERIOR		EXTERIOR	1	Existing LED Fixture; No Retrofit	40	0.040	175	1	No Retrofit	40	0.040	175
YELLOW CREEK	YURT D		INTERIOR		INTERIOR	1	65 Watt Incandescent R30 3-Lamp Fixture	195	0.195	722	1	Relamp with (3) 10 Watt LED BR30	30	0.030	111
YELLOW CREEK	YURT D		INTERIOR		KITCHEN	1	T8 2x2 1-Lamp Under Cabinet Wrap Fixture	22	0.022	81	1	No Retrofit	22	0.022	81
YELLOW CREEK	YURT D		INTERIOR		LAMPS	2	23 Watt Compact Fluorescent Fixture	23	0.046	170	2	Re-Lamp with (1) 10 Watt LED A19	10	0.020	74
YELLOW CREEK	YURT D		EXTERIOR		EXTERIOR	1	Existing LED Fixture; No Retrofit	40	0.040	175	1	No Retrofit	40	0.040	175
YELLOW CREEK	COTTAGE #1-5		INTERIOR		BED	6	23 Watt Compact Fluorescent Jelly Jar	23	0.138	511	6	Re-Lamp with (1) 10 Watt LED A19	10	0.060	222
YELLOW CREEK	COTTAGE #1-5		EXTERIOR		EXTERIOR	6	60 Watt Incandescent A-Lamp Jelly Jar Fixture	60	0.360	1,577	6	Re-Lamp with (1) 10 Watt LED A19	10	0.060	263
YELLOW CREEK	OVERNIGHT BATHHOUSE		INTERIOR		LAUNDRY	2	T8 1x2 2-Lamp Vanity Fixture	36	0.072	199	2	Retrofit with (2) 10 Watt LED T8 2' Lamps; Direct Wire to Socket	20	0.040	110
YELLOW CREEK	OVERNIGHT BATHHOUSE		INTERIOR		PIPE CHASE	4	T8 1x2 2-Lamp Vanity Fixture	36	0.144	397	4	Retrofit with (2) 10 Watt LED T8 2' Lamps; Direct Wire to Socket	20	0.080	221
YELLOW CREEK	OVERNIGHT BATHHOUSE		INTERIOR		MENS RESTROOM	8	T8 1x2 2-Lamp Vanity Fixture	36	0.288	1,319	8	Retrofit with (2) 10 Watt LED T8 2' Lamps; Direct Wire to Socket	20	0.160	733
YELLOW CREEK	OVERNIGHT BATHHOUSE		INTERIOR		FAMILY RESTROOM	2	T8 1x2 2-Lamp Vanity Fixture	36	0.072	330	2	Retrofit with (2) 10 Watt LED T8 2' Lamps; Direct Wire to Socket	20	0.040	183
YELLOW CREEK	OVERNIGHT BATHHOUSE		INTERIOR		WOMENS RESTROOM	8	T8 1x2 2-Lamp Vanity Fixture	36	0.288	1,319	8	Retrofit with (2) 10 Watt LED T8 2' Lamps; Direct Wire to Socket	20	0.160	733
YELLOW CREEK	SCOUT DWELLING		EXTERIOR		EXTERIOR	1	65 Watt Incandescent R30 2-Lamp Fixture	130	0.130	569	1	Relamp with (2) 10 Watt LED BR30	20	0.020	88
YELLOW CREEK	SCOUT DWELLING		EXTERIOR		EXTERIOR	1	13 Watt Compact Fluorescent Fixture	13	0.013	57	1	Re-Lamp with (1) 10 Watt LED A19	10	0.010	44
YELLOW CREEK	SCOUT DWELLING		EXTERIOR		EXTERIOR	1	60 Watt Incandescent A-Lamp Fixture	60	0.060	263	1	Re-Lamp with (1) 10 Watt LED A19	10	0.010	44
YELLOW CREEK	SCOUT DWELLING		INTERIOR		KITCHEN	1	150 Watt Mercury Vapor Fixture	188	0.188	696	1	Re-Lamp with (1) 36 Watt LED Omni-Cob Lamp; Hardwire Ballast	36	0.036	133
YELLOW CREEK	SCOUT DWELLING		INTERIOR		KITCHEN	1	60 Watt Incandescent A-Lamp Fixture	60	0.060	222	1	Re-Lamp with (1) 10 Watt LED A19	10	0.010	37
YELLOW CREEK	SCOUT DWELLING		INTERIOR		KITCHEN	1	T12 1x4 4-Lamp Wrap Fixture	144	0.144	533	1	Retrofit with (4) 12.5 Watt LED T8 4' Lamps; Direct Wire to Socket	50	0.050	185
YELLOW CREEK	SCOUT DWELLING		INTERIOR		DINING	1	60 Watt Incandescent A-Lamp Fixture	60	0.060	222	1	Re-Lamp with (1) 10 Watt LED A19	10	0.010	37

©2013 Energy Systems Group, LLC

EXISTING FIXTURES												PROPOSED FIXTURE UPGRADE				
Park/Building Name	Building	Building #	Phase	Floor	Room Description	Qty	Description	Watts	kW	kWh	Qty	Description	Watts	kW	kWh
YELLOW CREEK	SCOUT DWELLING		INTERIOR		LIVING ROOM	1	40 Watt Incandescent 3-Lamp Candelabra Fixture	120	0.120	444	1	Re-Lamp with (3) 5 Watt LED Candelabra	15	0.015	56
YELLOW CREEK	SCOUT DWELLING		INTERIOR		LIVING ROOM	3	50 Watt Incandescent R20 Fixture	50	0.150	556	3	Re-Lamp with (1) 8 Watt LED BR20	8	0.024	89
YELLOW CREEK	SCOUT DWELLING		INTERIOR		LIVING ROOM	1	65 Watt Incandescent PAR38	65	0.065	241	1	Re-Lamp with (1) 17 Watt LED PAR38	17	0.017	63
YELLOW CREEK	SCOUT DWELLING		INTERIOR		HALL	1	60 Watt Incandescent Globe Fixture	60	0.060	222	1	Re-Lamp with (1) 8 Watt LED G25 Globe	8	0.008	30
YELLOW CREEK	SCOUT DWELLING		INTERIOR		RESTROOM	1	60 Watt Incandescent 2-Lamp Globe Fixture	120	0.120	444	1	Re-Lamp with (2) 8 Watt LED G25 Globe	16	0.016	59
YELLOW CREEK	SCOUT DWELLING		INTERIOR		RESTROOM	1	40 Watt Incandescent 3-Lamp Candelabra Fixture	120	0.120	444	1	Re-Lamp with (3) 5 Watt LED Candelabra	15	0.015	56
YELLOW CREEK	SCOUT DWELLING		INTERIOR		BED	1	60 Watt Incandescent 2-Lamp Fixture	120	0.120	444	1	Re-Lamp with (2) 10 Watt LED A19	20	0.020	74
YELLOW CREEK	SCOUT DWELLING		INTERIOR		BED	1	60 Watt Incandescent 2-Lamp Fixture	120	0.120	444	1	Re-Lamp with (2) 10 Watt LED A19	20	0.020	74
YELLOW CREEK	SCOUT DWELLING		INTERIOR		BED	1	60 Watt Incandescent A-Lamp Fixture	60	0.060	222	1	Re-Lamp with (1) 10 Watt LED A19	10	0.010	37
YELLOW CREEK	SCOUT DWELLING		INTERIOR		CLOSET	1	13 Watt Compact Fluorescent Fixture	13	0.013	13	1	Re-Lamp with (1) 10 Watt LED A19	10	0.010	10
YELLOW CREEK	SCOUT DWELLING		INTERIOR		CLOSET	1	60 Watt Incandescent A-Lamp Fixture	60	0.060	60	1	Re-Lamp with (1) 10 Watt LED A19	10	0.010	10
YELLOW CREEK	SCOUT DWELLING		INTERIOR		BASEMENT	2	13 Watt Compact Fluorescent Fixture	13	0.026	96	2	Re-Lamp with (1) 10 Watt LED A19	10	0.020	74
YELLOW CREEK	SCOUT DWELLING		INTERIOR		BASEMENT	3	T12 1x4 2-Lamp Industrial Strip Fixture	72	0.216	800	3	Retrofit with (2) 12.5 Watt LED T8 4' Lamps; Direct Wire to Socket	25	0.075	278
YELLOW CREEK	SCOUT DWELLING		INTERIOR		BASEMENT	2	Existing LED Fixture; No Retrofit	10	0.020	74	2	No Retrofit	10	0.020	74
YELLOW CREEK	STATE CHURCH		INTERIOR		BASEMENT	5	60 Watt Incandescent A-Lamp Fixture	60	0.300	828	5	Re-Lamp with (1) 10 Watt LED A19	10	0.050	138
YELLOW CREEK	STATE CHURCH		INTERIOR		BASEMENT	1	60 Watt Incandescent A-Lamp Fixture	60	0.060	166	1	Re-Lamp with (1) 10 Watt LED A19	10	0.010	28
YELLOW CREEK	STATE CHURCH		EXTERIOR		EXTERIOR	1	60 Watt Incandescent A-Lamp Fixture	60	0.060	263	1	Re-Lamp with (1) 10 Watt LED A19	10	0.010	44
YELLOW CREEK	NORTH SHORE COMFORT STATION		EXTERIOR		EXTERIOR	4	90 Watt Incandescent PAR38 Fixture	90	0.360	1,577	4	Re-Lamp with (1) 17 Watt LED PAR38	17	0.068	298
YELLOW CREEK	NORTH SHORE COMFORT STATION		EXTERIOR		EXTERIOR	2	13 Watt Compact Fluorescent Canopy Fixture	13	0.026	114	2	New 10 Watt LED Canopy Fixture	12	0.024	105
YELLOW CREEK	NORTH SHORE COMFORT STATION		INTERIOR		MENS RESTROOM	3	100 Watt High Pressure Sodium Canopy Fixture	125	0.375	1,035	3	Re-Lamp with (1) 27 Watt LED Omni-Cob Lamp; Hardwire Ballast	27	0.081	224
YELLOW CREEK	NORTH SHORE COMFORT STATION		INTERIOR		MENS RESTROOM	1	13 Watt Compact Fluorescent Canopy Fixture	13	0.013	36	1	New 10 Watt LED Canopy Fixture	12	0.012	33
YELLOW CREEK	NORTH SHORE COMFORT STATION		INTERIOR		WOMENS RESTROOM	3	100 Watt High Pressure Sodium Canopy Fixture	125	0.375	1,035	3	Re-Lamp with (1) 27 Watt LED Omni-Cob Lamp; Hardwire Ballast	27	0.081	224
YELLOW CREEK	NORTH SHORE COMFORT STATION		INTERIOR		WOMENS RESTROOM	1	13 Watt Compact Fluorescent Canopy Fixture	13	0.013	36	1	New 10 Watt LED Canopy Fixture	12	0.012	33
YELLOW CREEK	NORTH SHORE COMFORT STATION		INTERIOR		PIPE CHASE	1	No Lights; Area(s) Not Included in Scope/Pricing	0	0.000	0	1	No Retrofit	0	0.000	0
YELLOW CREEK	SCOUT MAINTENANCE BUILDING		INTERIOR		SHOP	16	T8 1x8 4-Lamp Strip Fixture	106	1.696	4,411	16	Retrofit with (4) 12.5 Watt LED T8 4' Lamps; Direct Wire to Socket	50	0.800	2,081
YELLOW CREEK	SCOUT MAINTENANCE BUILDING		INTERIOR		STORAGE	2	T8 1x8 4-Lamp Strip Fixture	106	0.212	212	2	Retrofit with (4) 12.5 Watt LED T8 4' Lamps; Direct Wire to Socket	50	0.100	100

©2013 Energy Systems Group, LLC

EXISTING FIXTURES											PROPOSED FIXTURE UPGRADE				
Park/Building Name	Building	Building #	Phase	Floor	Room Description	Qty	Description	Watts	kW	kWh	Qty	Description	Watts	kW	kWh
YELLOW CREEK	SCOUT MAINTENANCE BUILDING		INTERIOR		RESTROOM	1	T8 2x4 4-Lamp Troffer Fixture	106	0.106	276	1	Retrofit with (4) 12.5 Watt LED T8 4' Lamps; Direct Wire to Socket	50	0.050	130
YELLOW CREEK	SCOUT MAINTENANCE BUILDING		INTERIOR		OFFICE	1	T8 2x4 4-Lamp Troffer Fixture	106	0.106	276	1	Retrofit with (4) 12.5 Watt LED T8 4' Lamps; Direct Wire to Socket	50	0.050	130
YELLOW CREEK	SCOUT MAINTENANCE BUILDING		EXTERIOR		FRONT	1	100 Watt High Pressure Sodium Flood Fixture	125	0.125	548	1	New 26 Watt LED Flood Fixture	27	0.027	118
YELLOW CREEK	SCOUT MAINTENANCE BUILDING		EXTERIOR		RIGHT	2	100 Watt High Pressure Sodium Wall Pack Fixture	125	0.250	1,095	2	New 24 Watt LED Wall Pack Fixture; Non-Dark Sky	25	0.050	219
YELLOW CREEK	SCOUT RESTROOM MAINTENANCE		INTERIOR		WOMENS RESTROOM	1	23 Watt Compact Fluorescent Downlight	23	0.023	60	1	Re-Lamp with (1) 10 Watt LED BR30	10	0.010	26
YELLOW CREEK	SCOUT RESTROOM MAINTENANCE		INTERIOR		MENS RESTROOM	1	23 Watt Compact Fluorescent Downlight	23	0.023	60	1	Re-Lamp with (1) 10 Watt LED BR30	10	0.010	26
YELLOW CREEK	SCOUT RESTROOM MAINTENANCE		EXTERIOR		EXTERIOR	2	13 Watt Plug-In CFL Jelly Jar	14	0.028	123	2	New 13 Watt LED Jelly Jar Fixture	15	0.030	131
YELLOW CREEK	SCOUT RESTROOM MAINTENANCE		EXTERIOR		PARKING	1	250 Watt Metal Halide 3-Head Flood Fixture	885	0.885	3,876	1	(3) New 125 Watt LED Flood Fixtures	402	0.402	1,761
YELLOW CREEK	SCOUT PAVILLION 1&2		EXTERIOR		PAVILLION	4	T8 1x8 4-Lamp Vaportight Fixture	106	0.424	1,857	4	Retrofit with (4) 12.5 Watt LED T8 4' Lamps; Direct Wire to Socket	50	0.200	876
YELLOW CREEK	SCOUT PAVILLION 1&2		EXTERIOR		PAVILLION	1	300 Watt Quartz Flood Fixture	300	0.300	1,314	1	New 52 Watt LED Flood Fixture	54	0.054	237
YELLOW CREEK	SCOUT PAVILLION 1&2		EXTERIOR		PAVILLION	1	100 Watt Metal Halide Wall Pack Fixture	125	0.125	548	1	New 24 Watt LED Wall Pack Fixture; Non-Dark Sky	25	0.025	110
YELLOW CREEK	SCOUT PAVILLION 1&2		EXTERIOR		PAVILLION	4	T8 1x8 4-Lamp Vaportight Fixture	106	0.424	1,857	4	Retrofit with (4) 12.5 Watt LED T8 4' Lamps; Direct Wire to Socket	50	0.200	876
YELLOW CREEK	SCOUT PAVILLION 1&2		EXTERIOR		PAVILLION	1	300 Watt Quartz Flood Fixture	300	0.300	1,314	1	New 52 Watt LED Flood Fixture	54	0.054	237
YELLOW CREEK	SCOUT CAMP		INTERIOR		SMALL BACK ROOM	1	23 Watt Compact Fluorescent Fixture	23	0.023	85	1	Re-Lamp with (1) 10 Watt LED A19	10	0.010	37
YELLOW CREEK	SCOUT CAMP		INTERIOR		LARGE BACK ROOM	2	60 Watt Incandescent A-Lamp Fixture	60	0.120	444	2	Re-Lamp with (1) 10 Watt LED A19	10	0.020	74
YELLOW CREEK	SCOUT CAMP		INTERIOR		LARGE BACK ROOM	2	13 Watt Compact Fluorescent Fixture	13	0.026	96	2	Re-Lamp with (1) 10 Watt LED A19	10	0.020	74
YELLOW CREEK	SCOUT CAMP		INTERIOR		KITCHEN	1	T8 1x4 4-Lamp Wrap Fixture	106	0.106	393	1	Retrofit with (4) 12.5 Watt LED T8 4' Lamps; Direct Wire to Socket	50	0.050	185
YELLOW CREEK	SCOUT CAMP		INTERIOR		RESTROOM	1	60 Watt Incandescent A-Lamp Fixture	60	0.060	222	1	Re-Lamp with (1) 10 Watt LED A19	10	0.010	37
YELLOW CREEK	SCOUT CAMP		EXTERIOR		EXTERIOR	1	13 Watt Compact Fluorescent Jelly Jar Fixture; Damaged	13	0.013	57	1	New 10 Watt LED A19 Jelly Jar	9	0.009	39
YELLOW CREEK	SCOUT CAMP		EXTERIOR		EXTERIOR	1	60 Watt Incandescent A-Lamp Jelly Jar Fixture	60	0.060	263	1	Re-Lamp with (1) 10 Watt LED A19	10	0.010	44
YELLOW CREEK	SCOUT FIRST AID BUILDING		INTERIOR		STORAGE BASEMENT	1	T8 2x4 4-Lamp Troffer Fixture	106	0.106	106	1	Retrofit with (4) 12.5 Watt LED T8 4' Lamps; Direct Wire to Socket	50	0.050	50
YELLOW CREEK	SCOUT FIRST AID BUILDING		EXTERIOR		EXTERIOR	1	70 Watt Metal Halide Flood Fixture	94	0.094	412	1	New 18 Watt LED Flood Fixture	22	0.022	96
YELLOW CREEK	SCOUT FIRST AID BUILDING		INTERIOR		KITCHEN	1	T12 2x4 4-Lamp Surface Mount Fixture	144	0.144	533	1	Retrofit with (4) 12.5 Watt LED T8 4' Lamps; Direct Wire to Socket	50	0.050	185
YELLOW CREEK	SCOUT FIRST AID BUILDING		INTERIOR		EXAM	1	60 Watt Incandescent A-Lamp Fixture	60	0.060	222	1	Re-Lamp with (1) 10 Watt LED A19	10	0.010	37
YELLOW CREEK	SCOUT FIRST AID BUILDING		INTERIOR		RESTROOM	1	60 Watt Incandescent A-Lamp Fixture	60	0.060	222	1	Re-Lamp with (1) 10 Watt LED A19	10	0.010	37
YELLOW CREEK	SCOUT FIRST AID BUILDING		INTERIOR		RESTROOM	1	25 Watt Incandescent 3-Lamp A-Lamp	75	0.075	278	1	Re-Lamp with (3) 7 Watt LED A19	21	0.021	78

©2013 Energy Systems Group, LLC

EXISTING FIXTURES											PROPOSED FIXTURE UPGRADE				
Park/Building Name	Building	Building #	Phase	Floor	Room Description	Qty	Description	Watts	kW	kWh	Qty	Description	Watts	kW	kWh
YELLOW CREEK	SCOUT FIRST AID BUILDING		EXTERIOR		EXTERIOR	1	13 Watt Compact Fluorescent Fixture	13	0.013	57	1	Re-Lamp with (1) 10 Watt LED A19	10	0.010	44
YELLOW CREEK	WILLIAM PENN SHOWER HOUSE-SCOUT CAMP		INTERIOR		MENS RESTROOM	12	T8 1x4 2-Lamp Vaportight Fixture	62	0.744	2,756	12	Retrofit with (2) 12.5 Watt LED T8 4' Lamps; Direct Wire to Socket	25	0.300	1,111
YELLOW CREEK	WILLIAM PENN SHOWER HOUSE-SCOUT CAMP		INTERIOR		MENS RESTROOM	1	3 Watt LED 2-Lamp Exit Sign	3	0.003	26	1	No Retrofit	3	0.003	26
YELLOW CREEK	WILLIAM PENN SHOWER HOUSE-SCOUT CAMP		INTERIOR		WOMENS RESTROOM	7	T8 1x4 2-Lamp Vaportight Fixture	62	0.434	1,198	7	Retrofit with (2) 12.5 Watt LED T8 4' Lamps; Direct Wire to Socket	25	0.175	483
YELLOW CREEK	WILLIAM PENN SHOWER HOUSE-SCOUT CAMP		INTERIOR		WOMENS RESTROOM	1	3 Watt LED 2-Lamp Exit Sign	3	0.003	26	1	No Retrofit	3	0.003	26
YELLOW CREEK	WILLIAM PENN SHOWER HOUSE-SCOUT CAMP		INTERIOR		MECHINICAL	3	T8 1x4 2-Lamp Industrial Strip Fixture; Turret	62	0.186	513	3	New 1x4 2-Lamp Industrial Fixture with (2) 12.5 Watt LED T8 4' Lamp; Direct Wire to Socket	25	0.075	207
YELLOW CREEK	WILLIAM PENN SHOWER HOUSE-SCOUT CAMP		EXTERIOR		EXTERIOR	4	23 Watt Comapct Fluorescent	23	0.092	403	4	Re-Lamp with (1) 10 Watt LED A19	10	0.040	175
YELLOW CREEK	WILLIAM PENN SHOWER HOUSE-SCOUT CAMP		EXTERIOR		EXTERIOR	1	T8 1x4 2-Lamp Vaportight Fixture	62	0.062	272	1	Retrofit with (2) 12.5 Watt LED T8 4' Lamps; Direct Wire to Socket	25	0.025	110
YELLOW CREEK	TRADING POST BUILDING - SCOUT CAMP		INTERIOR		OPEN OFFICE	5	T12 2x4 4-Lamp Troffer Fixture; Damaged	144	0.720	2,667	5	New 2x4 2-Lamp Lay-In Troffer Fixture with (2) 12.5 Watt LED T8 4' Lamp; Direct Wire to Socket	25	0.125	463
YELLOW CREEK	TRADING POST BUILDING - SCOUT CAMP		INTERIOR		RESTROOM	1	T12 2x4 4-Lamp Troffer Fixture	144	0.144	533	1	Retrofit with (4) 12.5 Watt LED T8 4' Lamps; Direct Wire to Socket	50	0.050	185
YELLOW CREEK	TRADING POST BUILDING - SCOUT CAMP		EXTERIOR		EXTERIOR	4	13 Watt Compact Fluorescent; PAR Holder	13	0.052	228	4	Re-Lamp with (1) 10 Watt LED PAR30	10	0.040	175
YELLOW CREEK	SCOUT DINING HALL		INTERIOR		DINING HALL	15	65 Watt Incandescent R30 Fixture	65	0.975	3,611	15	Re-Lamp with (1) 10 Watt LED BR30	10	0.150	556
YELLOW CREEK	SCOUT DINING HALL		INTERIOR		DINING HALL	16	23 Watt Compact Fluorescent Fixture	23	0.368	1,363	16	Re-Lamp with (1) 10 Watt LED A19	10	0.160	593
YELLOW CREEK	SCOUT DINING HALL		INTERIOR		DINING HALL	2	T12 1x4 2-Lamp Strip Fixture	72	0.144	533	2	Retrofit with (2) 12.5 Watt LED T8 4' Lamps; Direct Wire to Socket	25	0.050	185
YELLOW CREEK	SCOUT DINING HALL		INTERIOR		DINING HALL	1	25 Watt Incandescent 2-Lamp Exit Sign	50	0.050	438	1	New 3 watt LED Exit Sign	3	0.003	26
YELLOW CREEK	SCOUT DINING HALL		INTERIOR		KITCHEN	4	23 Watt Compact Fluorescent Fixture	23	0.092	341	4	Re-Lamp with (1) 10 Watt LED A19	10	0.040	148
YELLOW CREEK	SCOUT DINING HALL		INTERIOR		KITCHEN	3	T12 1x4 4-Lamp Wrap Fixture; Damaged	144	0.432	1,600	3	New 1x8 2-Lamp Wrap Fixture with (4) 12.5 Watt LED T8 4' Lamps; Direct Wire to Socket	50	0.150	556
YELLOW CREEK	SCOUT DINING HALL		INTERIOR		KITCHEN	1	T12 2x4 4-Lamp Surface Mount Fixture; Damaged	144	0.144	533	1	New 2x4 4-Lamp Surface Mount with (4) 12.5 Watt LED T8 4' Lamps; Direct Wire to Socket	50	0.050	185
YELLOW CREEK	SCOUT DINING HALL		INTERIOR		WASH ROOM	1	T12 1x4 2-Lamp Wrap Fixture; Damaged	72	0.072	267	1	New 1x4 2-Lamp Wrap Fixture with (2) 12.5 Watt LED T8 4' Lamp; Direct Wire to Socket	25	0.025	93
YELLOW CREEK	SCOUT DINING HALL		INTERIOR		WASH ROOM	1	T12 2x4 4-Lamp Surface Mount Fixture; Damaged	144	0.144	533	1	New 2x4 4-Lamp Surface Mount with (4) 12.5 Watt LED T8 4' Lamps; Direct Wire to Socket	50	0.050	185
YELLOW CREEK	SCOUT DINING HALL		INTERIOR		WASH ROOM	1	T12 1x4 2-Lamp Strip Fixture	72	0.072	267	1	Retrofit with (2) 12.5 Watt LED T8 4' Lamps; Direct Wire to Socket	25	0.025	93
YELLOW CREEK	SCOUT DINING HALL		INTERIOR		HOOD	3	23 Watt Compact Fluorescent Jelly Jar	23	0.069	256	3	Re-Lamp with (1) 10 Watt LED A19	10	0.030	111
YELLOW CREEK	SCOUT DINING HALL		INTERIOR		BACK STORAGE	3	T12 1x4 2-Lamp Industrial Strip Fixture	72	0.216	216	3	Retrofit with (2) 12.5 Watt LED T8 4' Lamps; Direct Wire to Socket	25	0.075	75
YELLOW CREEK	SCOUT DINING HALL		INTERIOR		RESTROOM	1	T12 1x4 2-Lamp Industrial Strip Fixture; Damaged	72	0.072	267	1	New 1x4 2-Lamp Industrial Fixture with (2) 12.5 Watt LED T8 4' Lamp; Direct Wire to Socket	25	0.025	93
YELLOW CREEK	SCOUT DINING HALL		INTERIOR		COOLER	2	60 Watt Incandescent A-Lamp Jelly Jar Fixture	60	0.120	120	2	Re-Lamp with (1) 10 Watt LED A19	10	0.020	20
YELLOW CREEK	SCOUT DINING HALL		EXTERIOR		BACK	2	23 Watt Compact Fluorescent R30	23	0.046	201	2	Re-Lamp with (1) 10 Watt LED BR30	10	0.020	88

©2013 Energy Systems Group, LLC



EXISTING FIXTURES											PROPOSED FIXTURE UPGRADE				
Park/Building Name	Building	Building #	Phase	Floor	Room Description	Qty	Description	Watts	kW	kWh	Qty	Description	Watts	kW	kWh
YELLOW CREEK	SCOUT DINING HALL		EXTERIOR		FRONT	2	13 Watt Compact Fluorescent Fixture	13	0.026	114	2	Re-Lamp with (1) 10 Watt LED A19	10	0.020	88
YELLOW CREEK	SCOUT DINING HALL		EXTERIOR		FRONT	1	70 Watt High Pressure Sodium Wall Pack Fixture	90	0.090	394	1	New 24 Watt LED Wall Pack Fixture; Non-Dark Sky	25	0.025	110
YELLOW CREEK	RINN LODGE		INTERIOR		BACK ROOM	4	Existing LED Fixture; No Retrofit	10	0.040	148	4	No Retrofit	10	0.040	148
YELLOW CREEK	RINN LODGE		INTERIOR		BACK ROOM	2	T12 1x4 2-Lamp Industrial Strip Fixture	72	0.144	533	2	Retrofit with (2) 12.5 Watt LED T8 4' Lamps; Direct Wire to Socket	25	0.050	185
YELLOW CREEK	RINN LODGE		INTERIOR		BACK ROOM	4	60 Watt Incandescent A-Lamp Fixture	60	0.240	889	4	Re-Lamp with (1) 10 Watt LED A19	10	0.040	148
YELLOW CREEK	RINN LODGE		INTERIOR		RESTROOM	2	T12 1x4 2-Lamp Industrial Strip Fixture	72	0.144	533	2	Retrofit with (2) 12.5 Watt LED T8 4' Lamps; Direct Wire to Socket	25	0.050	185
YELLOW CREEK	RESTROOM-SCOUT		INTERIOR		RESTROOM	1	Existing LED Fixture; No Retrofit	10	0.010	37	1	No Retrofit	10	0.010	37
YELLOW CREEK	RESTROOM-SCOUT		EXTERIOR		EXTERIOR	1	13 Watt Plug-In CFL Jelly Jar	14	0.014	61	1	New 13 Watt LED Jelly Jar Fixture	15	0.015	66
YELLOW CREEK	RESTROOM-SCOUT		EXTERIOR		EXTERIOR	1	13 Watt Compact Fluorescent Downlight	13	0.013	57	1	Re-Lamp with (1) 10 Watt LED BR30	10	0.010	44
YELLOW CREEK	SCOUT PAVILLION	216-37	INTERIOR		PAVILLION	12	90 Watt Incandescent R40	90	1.080	4,000	12	Re-Lamp with (1) 17 Watt LED PAR38	17	0.204	756
YELLOW CREEK	SCOUT PAVILLION	216-37	INTERIOR		PAVILLION	2	65 Watt Incandescent R30 Fixture	65	0.130	482	2	Re-Lamp with (1) 10 Watt LED BR30	10	0.020	74
YELLOW CREEK	SCOUT COTTAGE -	1	INTERIOR		EXTERIOR	1	13 Watt Compact Fluorescent Fixture	13	0.013	57	1	Re-Lamp with (1) 10 Watt LED A19	10	0.010	44
YELLOW CREEK	SCOUT COTTAGE -	1	INTERIOR		BACK ROOM	1	23 Watt Compact Fluorescent Fixture	23	0.023	85	1	Re-Lamp with (1) 10 Watt LED A19	10	0.010	37
YELLOW CREEK	SCOUT COTTAGE -	1	INTERIOR		BACK ROOM	1	100 Watt Incandescent A-Lamp Fixture	100	0.100	370	1	Re-Lamp with (1) 18 Watt LED A21	18	0.018	67
YELLOW CREEK	SCOUT COTTAGE -	2	INTERIOR		EXTERIOR	1	13 Watt Compact Fluorescent Fixture	13	0.013	57	1	Re-Lamp with (1) 10 Watt LED A19	10	0.010	44
YELLOW CREEK	SCOUT COTTAGE -	2	INTERIOR		BACK ROOM 1	1	23 Watt Compact Fluorescent Fixture	23	0.023	85	1	Re-Lamp with (1) 10 Watt LED A19	10	0.010	37
YELLOW CREEK	SCOUT COTTAGE -	2	INTERIOR		BACK ROOM 2	1	100 Watt Incandescent A-Lamp Fixture	100	0.100	370	1	Re-Lamp with (1) 18 Watt LED A21	18	0.018	67
YELLOW CREEK	SCOUT COTTAGE -	3	INTERIOR		EXTERIOR	1	23 Watt Compact Fluorescent Fixture	23	0.023	101	1	Re-Lamp with (1) 10 Watt LED A19	10	0.010	44
YELLOW CREEK	SCOUT COTTAGE -	3	INTERIOR		BACK ROOM	1	23 Watt Compact Fluorescent Fixture	23	0.023	85	1	Re-Lamp with (1) 10 Watt LED A19	10	0.010	37
YELLOW CREEK	SCOUT COTTAGE -	3	INTERIOR		BACK ROOM	1	23 Watt Compact Fluorescent Fixture	23	0.023	85	1	Re-Lamp with (1) 10 Watt LED A19	10	0.010	37
YELLOW CREEK	PAVILLION-STAFF		EXTERIOR		PAVILLION	4	T8 1x8 4-Lamp Vaportight Fixture	106	0.424	1,857	4	Retrofit with (4) 12.5 Watt LED T8 4' Lamps; Direct Wire to Socket	50	0.200	876
YELLOW CREEK	PAVILLION-STAFF		EXTERIOR		PAVILLION	2	300 Watt Quartz Flood Fixture	300	0.600	2,628	2	New 52 Watt LED Flood Fixture	54	0.108	473
YELLOW CREEK	STONE LODGE		INTERIOR		LODGE	2	T8HO 1x4 2-Lamp Strip Fixture	93	0.186	689	2	New 40 Watt LED Canopy Fixture	38	0.076	282
YELLOW CREEK	STONE LODGE		INTERIOR		LODGE	8	23 Watt Compact Fluorescent 2-Lamp Fixture	46	0.368	1,363	8	Re-Lamp with (2) 10 Watt LED A19	20	0.160	593
YELLOW CREEK	STONE LODGE		INTERIOR		LODGE	2	T8 2x4 6-Lamp High Bay Fixture	168	0.336	1,245	2	New 150 Watt LED High Bay Fixture	150	0.300	1,111
YELLOW CREEK	STONE LODGE		EXTERIOR		EXTERIOR	1	60 Watt Incandescent Jelly Jar Fixture; Damaged	60	0.060	263	1	New 10 Watt LED A19 Jelly Jar	9	0.009	39

©2013 Energy Systems Group, LLC

					EXISTING FIXTURES								PROPOSED FIXTURE UPGRADE				
Park/Building Name	Building	Building #	Phase	Floor	Room Description	Qty	Description	Watts	kW	kWh	Qty	Description	Watts	kW	kWh
YELLOW CREEK	STONE LODGE		EXTERIOR		PORCH	4	60 Watt Incandescent A-Lamp Fixture	60	0.240	1,051	4	Re-Lamp with (1) 10 Watt LED A 19	10	0.040	175
YELLOW CREEK	SEWAGE TREATMENT PLANT		EXTERIOR		EXTERIOR	2	100 Watt High Pressure Sodium Dusk to Dawn Fixture	125	0.250	1,095	2	New 26 Watt LED Dusk to Dawn Barnyard Fixture	26	0.052	228
YELLOW CREEK	SEWAGE TREATMENT PLANT		INTERIOR		PUMP ROOM	8	60 Watt Incandescent A-Lamp Fixture	60	0.480	1,248	8	Re-Lamp with (1) 10 Watt LED A 19	10	0.080	208
YELLOW CREEK	SEWAGE TREATMENT PLANT		INTERIOR		WATER LAB	1	T12 1x4 4-Lamp Wrap Fixture	144	0.144	375	1	Retrofit with (4) 12.5 Watt LED T8 4' Lamps; Direct Wire to Socket	50	0.050	130
YELLOW CREEK	SEWAGE TREATMENT PLANT		INTERIOR		RESTROOM	2	60 Watt Incandescent 2-Lamp Fixture	120	0.240	624	2	Re-Lamp with (2) 10 Watt LED A 19	20	0.040	104
YELLOW CREEK	SEWAGE TREATMENT PLANT		EXTERIOR		EXTERIOR	3	70 Watt High Pressure Sodium Wall Pack Fixture	90	0.270	1,183	3	New 24 Watt LED Wall Pack Fixture, Non-Dark Sky	25	0.075	329
YELLOW CREEK	SEWAGE TREATMENT PLANT		INTERIOR		CHLORINE	1	T12 1x4 2-Lamp Vaportight Fixture	72	0.072	187	1	Retrofit with (2) 12.5 Watt LED T8 4' Lamps; Direct Wire to Socket	25	0.025	65
RYERSON STATE PARK	PARK OFFICE & VISITOR CENTER		INTERIOR		RESTROOM-M/W EXTERIOR	2	T8 1x4 1-Lamp Vanity Fixture	30	0.060	232	2	Retrofit with (1) 12.5 Watt LED T8 4' Lamps; Direct Wire to Socket	12.5	0.025	97
RYERSON STATE PARK	PARK OFFICE & VISITOR CENTER		INTERIOR		RESTROOM-M/W EXTERIOR	2	T8 1x4 1-Lamp Vanity Fixture	30	0.060	232	2	Retrofit with (1) 12.5 Watt LED T8 4' Lamps; Direct Wire to Socket	12.5	0.025	97
RYERSON STATE PARK	PARK OFFICE & VISITOR CENTER		INTERIOR		LOBBY	5	T8 2x4 3-Lamp Troffer Fixture; Parabolic	84	0.420	944	5	Retrofit with (3) 12.5 Watt LED T8 4' Lamps; Direct Wire to Socket	37.5	0.188	422
RYERSON STATE PARK	PARK OFFICE & VISITOR CENTER		INTERIOR		LOBBY	1	T8 2x4 3-Lamp Troffer Fixture; Parabolic	84	0.084	189	1	Retrofit with (3) 12.5 Watt LED T8 4' Lamps; Direct Wire to Socket	37.5	0.038	84
RYERSON STATE PARK	PARK OFFICE & VISITOR CENTER		INTERIOR		LOBBY	1	3 Watt LED 2-Lamp Exit Sign	3	0.003	26	1	No Retrofit	3	0.003	26
RYERSON STATE PARK	PARK OFFICE & VISITOR CENTER		INTERIOR		OFFICE - CORNER	3	T8 2x4 3-Lamp Troffer Fixture; Parabolic	84	0.252	566	3	Retrofit with (3) 12.5 Watt LED T8 4' Lamps; Direct Wire to Socket	37.5	0.113	253
RYERSON STATE PARK	PARK OFFICE & VISITOR CENTER		INTERIOR		OFFICE - OPPOSITE CORNER	4	T8 2x4 3-Lamp Troffer Fixture; Parabolic	84	0.336	755	4	Retrofit with (3) 12.5 Watt LED T8 4' Lamps; Direct Wire to Socket	37.5	0.150	337
RYERSON STATE PARK	PARK OFFICE & VISITOR CENTER		INTERIOR		CLOSET	1	13 Watt Plug-In CFL 8" Downlight Fixture	14	0.014	14	1	No Retrofit	14	0.014	14
RYERSON STATE PARK	PARK OFFICE & VISITOR CENTER		INTERIOR		MARY'S OFFICE	3	T8 2x4 3-Lamp Troffer Fixture; Parabolic	84	0.252	566	3	Retrofit with (3) 12.5 Watt LED T8 4' Lamps; Direct Wire to Socket	37.5	0.113	253
RYERSON STATE PARK	PARK OFFICE & VISITOR CENTER		INTERIOR		MARY'S OFFICE	1	13 Watt Plug-In CFL 8" Downlight Fixture	14	0.014	31	1	No Retrofit	14	0.014	31
RYERSON STATE PARK	PARK OFFICE & VISITOR CENTER		INTERIOR		FILE ROOM	2	T8 1x4 2-Lamp Wrap Fixture	62	0.124	279	2	Retrofit with (2) 12.5 Watt LED T8 4' Lamps; Direct Wire to Socket	25	0.050	112
RYERSON STATE PARK	PARK OFFICE & VISITOR CENTER		INTERIOR		COPY	2	T8 1x4 2-Lamp Wrap Fixture	62	0.124	279	2	Retrofit with (2) 12.5 Watt LED T8 4' Lamps; Direct Wire to Socket	25	0.050	112
RYERSON STATE PARK	PARK OFFICE & VISITOR CENTER		INTERIOR		BREAK ROOM	4	T8 2x4 3-Lamp Troffer Fixture; Parabolic	84	0.336	755	4	Retrofit with (3) 12.5 Watt LED T8 4' Lamps; Direct Wire to Socket	37.5	0.150	337
RYERSON STATE PARK	PARK OFFICE & VISITOR CENTER		INTERIOR		RESTROOM	1	T8 1x4 1-Lamp Vanity Fixture	30	0.030	116	1	Retrofit with (1) 12.5 Watt LED T8 4' Lamps; Direct Wire to Socket	12.5	0.013	48
RYERSON STATE PARK	PARK OFFICE & VISITOR CENTER		INTERIOR		RESTROOM	1	T8 1x4 2-Lamp Wrap Fixture	62	0.062	240	1	Retrofit with (2) 12.5 Watt LED T8 4' Lamps; Direct Wire to Socket	25	0.025	97
RYERSON STATE PARK	PARK OFFICE & VISITOR CENTER		INTERIOR		MECHNICAL	2	T8 1x4 2-Lamp Wrap Fixture	62	0.124	124	2	Retrofit with (2) 12.5 Watt LED T8 4' Lamps; Direct Wire to Socket	25	0.050	50
RYERSON STATE PARK	PARK OFFICE & VISITOR CENTER		INTERIOR		OFFICE	2	T8 2x4 3-Lamp Troffer Fixture; Parabolic	84	0.168	378	2	Retrofit with (3) 12.5 Watt LED T8 4' Lamps; Direct Wire to Socket	37.5	0.075	169
RYERSON STATE PARK	PARK OFFICE & VISITOR CENTER		INTERIOR		CLASS ROOM	4	T8 1x4 4-Lamp Wrap Fixture; Difficult Access	106	0.424	953	4	Retrofit with (4) 14 Watt LED T8 4' Lamps and (2) Dimming Driver	50	0.200	450
RYERSON STATE PARK	PARK OFFICE & VISITOR CENTER		INTERIOR		CLASS ROOM	21	T8 1x4 4-Lamp Wrap Fixture	106	2.226	5,004	21	Retrofit with (4) 12.5 Watt LED T8 4' Lamps; Direct Wire to Socket	50	1.050	2,360

©2013 Energy Systems Group, LLC

EXISTING FIXTURES											PROPOSED FIXTURE UPGRADE				
Park/Building Name	Building	Building #	Phase	Floor	Room Description	Qty	Description	Watts	kW	kWh	Qty	Description	Watts	kW	kWh
RYERSON STATE PARK	PARK OFFICE & VISITOR CENTER		INTERIOR		CLASS ROOM	6	65 Watt Incandescent R30 Fixture	65	0.390	877	6	Re-Lamp with (1) 10 Watt LED BR30	10	0.060	135
RYERSON STATE PARK	PARK OFFICE & VISITOR CENTER		INTERIOR		CLOSET	1	T12 1x4 2-Lamp Wrap Fixture	72	0.072	162	1	Retrofit with (2) 12.5 Watt LED T8 4' Lamps; Direct Wire to Socket	25	0.025	56
RYERSON STATE PARK	PARK OFFICE & VISITOR CENTER		INTERIOR		CLASS ROOM	1	3 Watt LED 2-Lamp Exit Sign	3	0.003	7	1	No Retrofit	3	0.003	7
RYERSON STATE PARK	PARK OFFICE & VISITOR CENTER		INTERIOR		CLOSET	1	T8 1x4 2-Lamp Wrap Fixture	62	0.062	139	1	Retrofit with (2) 12.5 Watt LED T8 4' Lamps; Direct Wire to Socket	25	0.025	56
RYERSON STATE PARK	PARK OFFICE & VISITOR CENTER		INTERIOR		SECRETARY OFFICE	4	T8 2x4 3-Lamp Troffer Fixture; Parabolic	84	0.336	755	4	Retrofit with (3) 12.5 Watt LED T8 4' Lamps; Direct Wire to Socket	37.5	0.150	337
RYERSON STATE PARK	PARK OFFICE & VISITOR CENTER		INTERIOR		HALLWAY	3	T8 2x4 3-Lamp Troffer Fixture; Parabolic	84	0.252	566	3	Retrofit with (3) 12.5 Watt LED T8 4' Lamps; Direct Wire to Socket	37.5	0.113	253
RYERSON STATE PARK	PARK OFFICE & VISITOR CENTER		INTERIOR		HALLWAY	3	T8 2x4 3-Lamp Troffer Fixture; Parabolic	84	0.252	566	3	Retrofit with (3) 12.5 Watt LED T8 4' Lamps; Direct Wire to Socket	37.5	0.113	253
RYERSON STATE PARK	PARK OFFICE & VISITOR CENTER		INTERIOR		HALLWAY	4	3 Watt LED 2-Lamp Exit Sign	3	0.012	27	4	No Retrofit	3	0.012	27
RYERSON STATE PARK	PARK OFFICE & VISITOR CENTER		EXTERIOR		FRONT & BACK	1	150 Watt Metal Halide Dusk to Dawn Fixture	180	0.180	405	1	New 26 Watt LED Dusk to Dawn Barnyard Fixture	26	0.026	58
RYERSON STATE PARK	PARK OFFICE & VISITOR CENTER		EXTERIOR		FRONT & BACK	1	42 Watt Plug-In CFL Wall Pack Fixture	45	0.045	101	1	New 24 Watt LED Wall Pack Fixture; Non-Dark Sky	25	0.025	56
RYERSON STATE PARK	PARK OFFICE & VISITOR CENTER		EXTERIOR		FRONT & BACK	10	60 Watt Incandescent A-Lamp Downlight Fixture	60	0.600	1,349	10	Re-Lamp with (1) 10 Watt LED BR30	10	0.100	225
RYERSON STATE PARK	PARK OFFICE & VISITOR CENTER		EXTERIOR		FRONT & BACK	2	Existing LED Fixture; No Retrofit	40	0.080	180	2	No Retrofit	40	0.080	180
OIL CREEK STATE PARK	PARK OFFICE (12)		INTERIOR		FRONT AREA	4	T12 2x4 4-Lamp Troffer Fixture	144	0.576	1,295	4	Retrofit with (4) 12.5 Watt LED T8 4' Lamps; Direct Wire to Socket	50	0.200	450
OIL CREEK STATE PARK	PARK OFFICE (12)		INTERIOR		OFFICE	4	T12 2x4 4-Lamp Troffer Fixture	144	0.576	1,295	4	Retrofit with (4) 12.5 Watt LED T8 4' Lamps; Direct Wire to Socket	50	0.200	450
OIL CREEK STATE PARK	PARK OFFICE (12)		INTERIOR		OFFICE	4	T12 2x4 4-Lamp Troffer Fixture	144	0.576	1,295	4	Retrofit with (4) 12.5 Watt LED T8 4' Lamps; Direct Wire to Socket	50	0.200	450
OIL CREEK STATE PARK	PARK OFFICE (12)		INTERIOR		STORAGE	2	T12 2x4 2-Lamp Troffer Fixture	78	0.156	156	2	Retrofit with (2) 12.5 Watt LED T8 4' Lamps; Direct Wire to Socket	25	0.050	50
OIL CREEK STATE PARK	PARK OFFICE (12)		INTERIOR		MECHANICAL	3	T12 1x4 2-Lamp Industrial Strip Fixture	72	0.216	216	3	Retrofit with (2) 12.5 Watt LED T8 4' Lamps; Direct Wire to Socket	25	0.075	75
OIL CREEK STATE PARK	PARK OFFICE (12)		INTERIOR		BATHROOM	1	T8 2x4 2-Lamp Troffer Fixture	62	0.062	139	1	Retrofit with (2) 12.5 Watt LED T8 4' Lamps; Direct Wire to Socket	25	0.025	56
OIL CREEK STATE PARK	PARK OFFICE (12)		INTERIOR		BATHROOM	1	T8 2x4 2-Lamp Troffer Fixture	62	0.062	139	1	Retrofit with (2) 12.5 Watt LED T8 4' Lamps; Direct Wire to Socket	25	0.025	56
OIL CREEK STATE PARK	PARK OFFICE (12)		INTERIOR		BATHROOM	1	T12 1x4 2-Lamp Vanity Fixture	72	0.072	162	1	Retrofit with (2) 12.5 Watt LED T8 4' Lamps; Direct Wire to Socket	25	0.025	56
OIL CREEK STATE PARK	PARK OFFICE (12) / AMPHITHEATER		INTERIOR		AMPHITHEATER	9	60 Watt Incandescent A-Lamp Downlight Fixture	60	0.540	540	9	Re-Lamp with (1) 10 Watt LED BR30	10	0.090	90
OIL CREEK STATE PARK	PARK OFFICE (12) / AMPHITHEATER		INTERIOR		AMPHITHEATER	9	175 Watt Metal Halide 12" Downlight Fixture; Difficult Access	215	1.935	1,935	9	No Retrofit	215	1.935	1,935
OIL CREEK STATE PARK	PARK OFFICE (12) / AMPHITHEATER		INTERIOR		AMPHITHEATER	2	175 Watt Metal Halide 12" Downlight Fixture	215	0.430	1,883	2	No Retrofit	215	0.430	1,883
OIL CREEK STATE PARK	BEHIND PARK OFFICE (12)		INTERIOR		PUMP HOUSE	1	60 Watt Incandescent A-Lamp Fixture	60	0.060	60	1	Re-Lamp with (1) 10 Watt LED A19	10	0.010	10
OIL CREEK STATE PARK	FORESTRY BLDG 19		INTERIOR		STORAGE	6	23 Watt Compact Fluorescent Fixture	23	0.138	138	6	Re-Lamp with (1) 10 Watt LED A19	10	0.060	60
OIL CREEK STATE PARK	FORESTRY BLDG 19		EXTERIOR		EXTERIOR	1	50 Watt Metal Halide Wall Pack Fixture	72	0.072	315	1	New 24 Watt LED Wall Pack Fixture; Non-Dark Sky	25	0.025	110

©2013 Energy Systems Group, LLC

EXISTING FIXTURES												PROPOSED FIXTURE UPGRADE				
Park/Building Name	Building	Building #	Phase	Floor	Room Description	Qty	Description	Watts	kW	kWh	Qty	Description	Watts	kW	kWh
OIL CREEK STATE PARK	TRAIN STATION VISITORS CENTTER		INTERIOR		VISITORS CENTER	6	23 Watt Compact Fluorescent Fixture	23	0.138	138	6	Re-Lamp with (1) 10 Watt LED A19	10	0.060	60
OIL CREEK STATE PARK	TRAIN STATION VISITORS CENTTER		INTERIOR		VISITORS CENTER	3	25 Watt Incandescent 2-Lamp Exit Sign	50	0.150	150	3	New 3 watt LED Exit Sign	3	0.009	9
OIL CREEK STATE PARK	TRAIN STATION VISITORS CENTTER		EXTERIOR		EXTERIOR	4	10 Watt Metal Halide Post Top Fixture; Silver	125	0.500	2,190	4	New 26 Watt LED Spider Mount Post Top Fixture; Silver	29	0.116	508
OIL CREEK STATE PARK	CHORINATION BLDG		INTERIOR		STORAGE	1	100 Watt Incandescent Explosion Proof Fixture	100	0.100	100	1	Relamp with (1) 18 Watt LED A21; Difficult Access	15	0.015	15
OIL CREEK STATE PARK	WATER TREATMENT & NEW GARAGE		INTERIOR		EQUIPMENT STORAGE	2	T12 1x4 2-Lamp Industrial Strip Fixture	72	0.144	144	2	Retrofit with (2) 12.5 Watt LED T8 4' Lamps; Direct Wire to Socket	25	0.050	50
OIL CREEK STATE PARK	WATER TREATMENT & NEW GARAGE		INTERIOR		STORAGE	3	60 Watt Incandescent A-Lamp Fixture	60	0.180	180	3	Re-Lamp with (1) 10 Watt LED A19	10	0.030	30
OIL CREEK STATE PARK	WATER TREATMENT & NEW GARAGE		EXTERIOR		EXTERIOR	3	60 Watt Incandescent A-Lamp Fixture	60	0.180	788	3	Re-Lamp with (1) 10 Watt LED A19	10	0.030	131
OIL CREEK STATE PARK	MAINTENANCE HEADQUATERS		INTERIOR		LARGE INTERIOR BARN STORAGE	8	80 Watt Compact Fluorescent	80	0.640	640	8	Re-Lamp with (1) 36 Watt LED Omni-Cob Lamp; Hardwire Ballast	36	0.288	288
OIL CREEK STATE PARK	MAINTENANCE HEADQUATERS		INTERIOR		LARGE INTERIOR BARN STORAGE	2	T8 2x3 2-Lamp Industrial Strip Fixture	49	0.098	98	2	Retrofit with (2) 12 Watt LED T8 3' Lamps; Direct Wire to Socket	24	0.048	48
OIL CREEK STATE PARK	MAINTENANCE HEADQUATERS		INTERIOR		STORAGE	3	T12 1x4 2-Lamp Industrial Strip Fixture	72	0.216	216	3	Retrofit with (2) 12.5 Watt LED T8 4' Lamps; Direct Wire to Socket	25	0.075	75
OIL CREEK STATE PARK	MAINTENANCE HEADQUATERS		INTERIOR		STORAGE	2	60 Watt Incandescent A-Lamp Fixture	60	0.120	120	2	Re-Lamp with (1) 10 Watt LED A19	10	0.020	20
OIL CREEK STATE PARK	MAINTENANCE HEADQUATERS		INTERIOR		OFFICE	2	T12 1x4 2-Lamp Industrial Strip Fixture	72	0.144	375	2	Retrofit with (2) 12.5 Watt LED T8 4' Lamps; Direct Wire to Socket	25	0.050	130
OIL CREEK STATE PARK	MAINTENANCE HEADQUATERS		INTERIOR		HALLWAY	3	T12 1x4 2-Lamp Industrial Strip Fixture	72	0.216	562	3	Retrofit with (2) 12.5 Watt LED T8 4' Lamps; Direct Wire to Socket	25	0.075	195
OIL CREEK STATE PARK	MAINTENANCE HEADQUATERS		INTERIOR		HALLWAY	1	T8 2x3 2-Lamp Strip Fixture	49	0.049	127	1	Retrofit with (2) 12 Watt LED T8 3' Lamps; Direct Wire to Socket	24	0.024	62
OIL CREEK STATE PARK	MAINTENANCE HEADQUATERS		INTERIOR		STORAGE	1	T12 1x4 2-Lamp Industrial Strip Fixture	72	0.072	72	1	Retrofit with (2) 12.5 Watt LED T8 4' Lamps; Direct Wire to Socket	25	0.025	25
OIL CREEK STATE PARK	MAINTENANCE HEADQUATERS		INTERIOR		STORAGE	5	T12 1x4 2-Lamp Industrial Strip Fixture	72	0.360	360	5	Retrofit with (2) 12.5 Watt LED T8 4' Lamps; Direct Wire to Socket	25	0.125	125
OIL CREEK STATE PARK	MAINTENANCE HEADQUATERS		INTERIOR		STORAGE	2	T8 2x2 2-Lamp Industrial Strip Fixture	36	0.072	72	2	Retrofit with (2) 10 Watt LED T8 2' Lamps; Direct Wire to Socket	20	0.040	40
OIL CREEK STATE PARK	MAINTENANCE HEADQUATERS		INTERIOR		STORAGE	4	T12 1x4 2-Lamp Industrial Strip Fixture	72	0.288	288	4	Retrofit with (2) 12.5 Watt LED T8 4' Lamps; Direct Wire to Socket	25	0.100	100
OIL CREEK STATE PARK	MAINTENANCE HEADQUATERS		INTERIOR		BREAKROOM	6	60 Watt Incandescent A-Lamp Fixture	60	0.360	936	6	Re-Lamp with (1) 10 Watt LED A19	10	0.060	156
OIL CREEK STATE PARK	MAINTENANCE HEADQUATERS		INTERIOR		STORAGE	2	T8 1x4 2-Lamp Strip Fixture	62	0.124	124	2	Retrofit with (2) 12.5 Watt LED T8 4' Lamps; Direct Wire to Socket	25	0.050	50
OIL CREEK STATE PARK	MAINTENANCE HEADQUATERS		INTERIOR		MAINTENANCE GARAGE	11	T12 1x4 2-Lamp Strip Fixture	72	0.792	2,060	11	Retrofit with (2) 12.5 Watt LED T8 4' Lamps; Direct Wire to Socket	25	0.275	715
CORNPLANTER FORESTRY DISTRICT 14	HUNTERS RUN STATE FOREST HQ		INTERIOR		GARAGE	4	T12 1x8 2-Lamp Industrial Strip Fixture with 60 Watt Lamps	123	0.492	1,280	4	Retrofit with (4) 12.5 Watt LED T8 4' Lamps and (1) 1x8 4-Lamp Industrial Strip Kit; Direct Wire to Socket	50	0.200	520
CORNPLANTER FORESTRY DISTRICT 14	HUNTERS RUN STATE FOREST HQ		INTERIOR		MAIN / OPEN AREA	4	60 Watt Incandescent 4-Lamp Fixture	240	0.960	2,497	4	Re-Lamp with (4) 10 Watt LED A19	40	0.160	416
CORNPLANTER FORESTRY DISTRICT 14	HUNTERS RUN STATE FOREST HQ		INTERIOR		KITCHEN	2	60 Watt Incandescent A-Lamp Fixture	60	0.120	312	2	Re-Lamp with (1) 10 Watt LED A19	10	0.020	52
CORNPLANTER FORESTRY DISTRICT 14	HUNTERS RUN STATE FOREST HQ		INTERIOR		BATHROOM	1	60 Watt Incandescent A-Lamp Fixture	60	0.060	156	1	Re-Lamp with (1) 10 Watt LED A19	10	0.010	26
CORNPLANTER FORESTRY DISTRICT 14	HUNTERS RUN STATE FOREST HQ		INTERIOR		BATHROOM	1	T5 1x2 2-Lamp Vanity Fixture	32	0.032	83	1	No Retrofit	32	0.032	83

©2013 Energy Systems Group, LLC

EXISTING FIXTURES												PROPOSED FIXTURE UPGRADE				
Park/Building Name	Building	Building #	Phase	Floor	Room Description	Qty	Description	Watts	kW	kWh	Qty	Description	Watts	kW	kWh
CORNPLANTER FORESTRY DISTRICT 14	HUNTERS RUN STATE FOREST HQ		EXTERIOR		EXTERIOR	2	100 Watt Incandescent Wall Pack Fixture	100	0.200	876	2	New 24 Watt LED Wall Pack Fixture; Non-Dark Sky	25	0.050	219
CORNPLANTER FORESTRY DISTRICT 14	HUNTERS RUN STATE FOREST HQ		EXTERIOR		EXTERIOR	1	150 Watt Metal Halide Dusk to Dawn Fixture	180	0.180	788	1	New 26 Watt LED Dusk to Dawn Barnyard Fixture	26	0.026	114
CORNPLANTER FORESTRY DISTRICT 14	HUNTERS RUN MAINTENANCE GARAGE		INTERIOR		GARAGE	3	23 Watt Compact Fluorescent Fixture	23	0.069	179	3	Re-Lamp with (1) 10 Watt LED A19	10	0.030	78
CORNPLANTER FORESTRY DISTRICT 14	HUNTERS RUN MAINTENANCE GARAGE		INTERIOR		GARAGE	4	60 Watt Incandescent A-Lamp Fixture	60	0.240	624	4	Re-Lamp with (1) 10 Watt LED A19	10	0.040	104
CORNPLANTER FORESTRY DISTRICT 14	HUNTERS RUN MAINTENANCE GARAGE		EXTERIOR		EXTERIOR	1	65 Watt Incandescent PAR30 Fixture	65	0.065	285	1	Re-Lamp with (1) 10 Watt LED PAR30	10	0.010	44
CORNPLANTER FORESTRY DISTRICT 14	TIONESTA TOWER CABIN (BLDG 14TC1)		INTERIOR		CABIN	1	60 Watt Incandescent A-Lamp Fixture	60	0.060	222	1	Re-Lamp with (1) 10 Watt LED A19	10	0.010	37
CORNPLANTER FORESTRY DISTRICT 14	TIONESTA FIRE TOWER (14 TIONESTA TOWER)		INTERIOR		TOWER	1	60 Watt Incandescent A-Lamp Fixture	60	0.060	156	1	Re-Lamp with (1) 10 Watt LED A19	10	0.010	26
CORNPLANTER FORESTRY DISTRICT 14	WHEELER FIRE TOWER (14 WHEELER TOWER)		INTERIOR		TOWER	1	60 Watt Incandescent A-Lamp Fixture	60	0.060	156	1	Re-Lamp with (1) 10 Watt LED A19	10	0.010	26
CORNPLANTER FORESTRY DISTRICT 14	PLUMER FIRE TOWER (PLUMER TOWER)		INTERIOR		TOWER	1	60 Watt Incandescent A-Lamp Fixture	60	0.060	156	1	Re-Lamp with (1) 10 Watt LED A19	10	0.010	26
CORNPLANTER FORESTRY DISTRICT 14	FOREST DISTRICT OFFICE (BLDG 14-01-2)		INTERIOR		ASST DIRECTOR	4	T12 2x4 4-Lamp Troffer Fixture	144	0.576	1,295	4	Retrofit with (4) 12.5 Watt LED T8 4' Lamps; Direct Wire to Socket	50	0.200	450
CORNPLANTER FORESTRY DISTRICT 14	FOREST DISTRICT OFFICE (BLDG 14-01-2)		INTERIOR		ASST DIRECTOR	3	65 Watt Incandescent R30 Fixture	65	0.195	438	3	Re-Lamp with (1) 10 Watt LED BR30	10	0.030	67
CORNPLANTER FORESTRY DISTRICT 14	FOREST DISTRICT OFFICE (BLDG 14-01-2)		INTERIOR		DIRECTORS OFFICE	4	T12 2x4 4-Lamp Troffer Fixture	144	0.576	1,295	4	Retrofit with (4) 12.5 Watt LED T8 4' Lamps; Direct Wire to Socket	50	0.200	450
CORNPLANTER FORESTRY DISTRICT 14	FOREST DISTRICT OFFICE (BLDG 14-01-2)		INTERIOR		DIRECTORS OFFICE	2	65 Watt Incandescent R30 Fixture	65	0.130	292	2	Re-Lamp with (1) 10 Watt LED BR30	10	0.020	45
CORNPLANTER FORESTRY DISTRICT 14	FOREST DISTRICT OFFICE (BLDG 14-01-2)		INTERIOR		OFFICE 3	2	T12 2x4 4-Lamp Troffer Fixture	144	0.288	647	2	Retrofit with (4) 12.5 Watt LED T8 4' Lamps; Direct Wire to Socket	50	0.100	225
CORNPLANTER FORESTRY DISTRICT 14	FOREST DISTRICT OFFICE (BLDG 14-01-2)		INTERIOR		WOMENS RESTROOM	1	60 Watt Incandescent Globe Fixture	60	0.060	135	1	Re-Lamp with (1) 8 Watt LED G25 Globe	8	0.008	18
CORNPLANTER FORESTRY DISTRICT 14	FOREST DISTRICT OFFICE (BLDG 14-01-2)		INTERIOR		WOMENS RESTROOM	1	60 Watt Incandescent A-Lamp Fixture	60	0.060	135	1	Re-Lamp with (1) 10 Watt LED A19	10	0.010	22
CORNPLANTER FORESTRY DISTRICT 14	FOREST DISTRICT OFFICE (BLDG 14-01-2)		INTERIOR		MENS RESTROOM	1	T12 1x4 2-Lamp Vanity Fixture	72	0.072	162	1	Retrofit with (2) 12.5 Watt LED T8 4' Lamps; Direct Wire to Socket	25	0.025	56
CORNPLANTER FORESTRY DISTRICT 14	FOREST DISTRICT OFFICE (BLDG 14-01-2)		INTERIOR		MENS RESTROOM	1	60 Watt Incandescent A-Lamp Fixture	60	0.060	135	1	Re-Lamp with (1) 10 Watt LED A19	10	0.010	22
CORNPLANTER FORESTRY DISTRICT 14	FOREST DISTRICT OFFICE (BLDG 14-01-2)		INTERIOR		LUNCH ROOM	2	T12 2x4 4-Lamp Troffer Fixture	144	0.288	647	2	Retrofit with (4) 12.5 Watt LED T8 4' Lamps; Direct Wire to Socket	50	0.100	225
CORNPLANTER FORESTRY DISTRICT 14	FOREST DISTRICT OFFICE (BLDG 14-01-2)		INTERIOR		CLERICAL OFFICE	7	T12 2x4 4-Lamp Troffer Fixture	144	1.008	2,266	7	Retrofit with (4) 12.5 Watt LED T8 4' Lamps; Direct Wire to Socket	50	0.350	787
CORNPLANTER FORESTRY DISTRICT 14	FOREST DISTRICT OFFICE (BLDG 14-01-2)		INTERIOR		COPY ROOM	1	T12 2x4 4-Lamp Troffer Fixture	144	0.144	324	1	Retrofit with (4) 12.5 Watt LED T8 4' Lamps; Direct Wire to Socket	50	0.050	112
CORNPLANTER FORESTRY DISTRICT 14	FOREST DISTRICT OFFICE (BLDG 14-01-2)		INTERIOR		FIRE INSPECTOR OFFICE	3	T12 2x4 4-Lamp Troffer Fixture	144	0.432	971	3	Retrofit with (4) 12.5 Watt LED T8 4' Lamps; Direct Wire to Socket	50	0.150	337
CORNPLANTER FORESTRY DISTRICT 14	FOREST DISTRICT OFFICE (BLDG 14-01-2)		INTERIOR		FIRE INSPECTOR OFFICE	2	65 Watt Incandescent R30 Fixture	65	0.130	292	2	Re-Lamp with (1) 10 Watt LED BR30	10	0.020	45
CORNPLANTER FORESTRY DISTRICT 14	FOREST DISTRICT OFFICE (BLDG 14-01-2)		INTERIOR		CONFERENCE ROOM	8	T12 2x4 4-Lamp Troffer Fixture	144	1.152	2,590	8	Retrofit with (4) 12.5 Watt LED T8 4' Lamps; Direct Wire to Socket	50	0.400	899
CORNPLANTER FORESTRY DISTRICT 14	FOREST DISTRICT OFFICE (BLDG 14-01-2)		INTERIOR		CONFERENCE ROOM	1	T12 1x4 2-Lamp Wrap Fixture	72	0.072	162	1	Retrofit with (2) 12.5 Watt LED T8 4' Lamps; Direct Wire to Socket	25	0.025	56
CORNPLANTER FORESTRY DISTRICT 14	FOREST DISTRICT OFFICE (BLDG 14-01-2)		INTERIOR		SIDE ROOM	2	T12 2x4 4-Lamp Troffer Fixture	144	0.288	647	2	Retrofit with (4) 12.5 Watt LED T8 4' Lamps; Direct Wire to Socket	50	0.100	225

©2013 Energy Systems Group, LLC

EXISTING FIXTURES												PROPOSED FIXTURE UPGRADE				
Park/Building Name	Building	Building #	Phase	Floor	Room Description	Qty	Description	Watts	kW	kWh	Qty	Description	Watts	kW	kWh
CORNPLANTER FORESTRY DISTRICT 14	FOREST DISTRICT OFFICE (BLDG 14-0-2)		INTERIOR		HALLWAY	7	T12 2x4 4-Lamp Troffer Fixture	144	1.008	2,266	7	Retrofit with (4) 12.5 Watt LED T8 4' Lamps; Direct Wire to Socket	50	0.350	787
CORNPLANTER FORESTRY DISTRICT 14	FOREST DISTRICT OFFICE (BLDG 14-0-2)		INTERIOR		JANITORS CLOSET	1	60 Watt Incandescent A-Lamp Fixture	60	0.060	60	1	Re-Lamp with (1) 10 Watt LED A19	10	0.010	10
CORNPLANTER FORESTRY DISTRICT 14	FOREST DISTRICT OFFICE (BLDG 14-0-2)		INTERIOR		STAIRS	2	T12 1x4 2-Lamp Wrap Fixture	72	0.144	324	2	Retrofit with (2) 12.5 Watt LED T8 4' Lamps; Direct Wire to Socket	25	0.050	112
CORNPLANTER FORESTRY DISTRICT 14	FOREST DISTRICT OFFICE (BLDG 14-0-2)		INTERIOR		BASEMENT HALLWAY	4	T12 2x4 4-Lamp Troffer Fixture	144	0.576	1,295	4	Retrofit with (4) 12.5 Watt LED T8 4' Lamps; Direct Wire to Socket	50	0.200	450
CORNPLANTER FORESTRY DISTRICT 14	FOREST DISTRICT OFFICE (BLDG 14-0-2)		INTERIOR		OPEN AREA	3	T8 1x4 2-Lamp Wrap Fixture	62	0.186	418	3	Retrofit with (2) 12.5 Watt LED T8 4' Lamps; Direct Wire to Socket	25	0.075	169
CORNPLANTER FORESTRY DISTRICT 14	FOREST DISTRICT OFFICE (BLDG 14-0-2)		INTERIOR		MECHANICAL	1	T8 1x4 2-Lamp Wrap Fixture	62	0.062	62	1	Retrofit with (2) 12.5 Watt LED T8 4' Lamps; Direct Wire to Socket	25	0.025	25
CORNPLANTER FORESTRY DISTRICT 14	FOREST DISTRICT OFFICE (BLDG 14-0-2)		INTERIOR		TELEPHONE ROOM	2	T8 1x4 2-Lamp Wrap Fixture	62	0.124	124	2	Retrofit with (2) 12.5 Watt LED T8 4' Lamps; Direct Wire to Socket	25	0.050	50
CORNPLANTER FORESTRY DISTRICT 14	FOREST DISTRICT OFFICE (BLDG 14-0-2)		INTERIOR		RECORDS ROOM	3	T8 1x4 2-Lamp Wrap Fixture	62	0.186	418	3	Retrofit with (2) 12.5 Watt LED T8 4' Lamps; Direct Wire to Socket	25	0.075	169
CORNPLANTER FORESTRY DISTRICT 14	FOREST DISTRICT OFFICE (BLDG 14-0-2)		INTERIOR		FILE ROOM	3	T8 1x4 2-Lamp Wrap Fixture	62	0.186	418	3	Retrofit with (2) 12.5 Watt LED T8 4' Lamps; Direct Wire to Socket	25	0.075	169
CORNPLANTER FORESTRY DISTRICT 14	FOREST DISTRICT OFFICE (BLDG 14-0-2)		INTERIOR		WORK ROOM	3	T8 1x4 2-Lamp Wrap Fixture	62	0.186	418	3	Retrofit with (2) 12.5 Watt LED T8 4' Lamps; Direct Wire to Socket	25	0.075	169
CORNPLANTER FORESTRY DISTRICT 14	FOREST DISTRICT OFFICE (BLDG 14-0-2)		INTERIOR		WORK ROOM	1	T12 2x3 2-Lamp Vanity Fixture	73	0.073	164	1	Retrofit with (2) 12 Watt LED T8 3' Lamps; Direct Wire to Socket	24	0.024	54
CORNPLANTER FORESTRY DISTRICT 14	FOREST DISTRICT OFFICE (BLDG 14-0-2)		INTERIOR		WORK ROOM	1	T8 1x4 2-Lamp Troffer Fixture	62	0.062	139	1	Retrofit with (2) 12.5 Watt LED T8 4' Lamps; Direct Wire to Socket	25	0.025	56
CORNPLANTER FORESTRY DISTRICT 14	FOREST DISTRICT OFFICE (BLDG 14-0-2)		INTERIOR		PAINT ROOM	1	60 Watt Incandescent Explosion Proof Fixture	60	0.060	60	1	Relamp with (1) 10 Watt LED A19; Difficult Access	10	0.010	10
CORNPLANTER FORESTRY DISTRICT 14	FOREST DISTRICT OFFICE (BLDG 14-0-2)		INTERIOR		STAIRS #2	3	T12 1x4 2-Lamp Fixture	72	0.216	486	3	Retrofit with (2) 12.5 Watt LED T8 4' Lamps; Direct Wire to Socket	25	0.075	169
CORNPLANTER FORESTRY DISTRICT 14	FOREST DISTRICT OFFICE (BLDG 14-0-2)		INTERIOR		UPSTAIRS ENTRANCE	1	T8 2x2 2-Lamp U-Lamp Troffer Fixture with 5" Lamps	62	0.062	139	1	Retrofit with (2) 10 Watt LED T8 2' Lamps and (1) 2x2 2-Lamp White Reflector Kit; Direct Wire to Socket	20	0.020	45
CORNPLANTER FORESTRY DISTRICT 14	FOREST DISTRICT OFFICE (BLDG 14-0-2)		INTERIOR		EXTERIOR	4	60 Watt Incandescent A-Lamp Fixture	60	0.240	1,051	4	Re-Lamp with (1) 10 Watt LED A19	10	0.040	175
CORNPLANTER FORESTRY DISTRICT 14	FOREST DISTRICT OFFICE (BLDG 14-0-2)		INTERIOR		EXTERIOR	1	65 Watt Incandescent 2-Lamp PAR30	130	0.130	569	1	Re-Lamp with (2) 10 Watt LED PAR30	20	0.020	88
CORNPLANTER FORESTRY DISTRICT 14	DISTRICT OFFICE MAINTENANCE GARAGE (BLDG 14-G-2GE)		INTERIOR		WORK BAY	11	T12 1x4 4-Lamp Troffer Fixture	144	1.584	3,561	11	Retrofit with (4) 12.5 Watt LED T8 4' Lamps; Direct Wire to Socket	50	0.550	1,236
CORNPLANTER FORESTRY DISTRICT 14	DISTRICT OFFICE MAINTENANCE GARAGE (BLDG 14-G-2GE)		INTERIOR		OFFICE	2	T12 1x4 4-Lamp Troffer Fixture	144	0.288	647	2	Retrofit with (4) 12.5 Watt LED T8 4' Lamps; Direct Wire to Socket	50	0.100	225
CORNPLANTER FORESTRY DISTRICT 14	DISTRICT OFFICE MAINTENANCE GARAGE (BLDG 14-G-2GE)		INTERIOR		BATHROOM	1	60 Watt Incandescent A-Lamp Fixture	60	0.060	31	1	Re-Lamp with (1) 10 Watt LED A19	10	0.010	5
CORNPLANTER FORESTRY DISTRICT 14	DISTRICT OFFICE MAINTENANCE GARAGE (BLDG 14-G-2GE)		INTERIOR		TOOL SHED	1	60 Watt Incandescent A-Lamp Fixture	60	0.060	60	1	Re-Lamp with (1) 10 Watt LED A19	10	0.010	10
CORNPLANTER FORESTRY DISTRICT 14	DISTRICT OFFICE GARAGE BAYS (BLDG 14-G-1)		INTERIOR		BAYS	3	100 Watt Incandescent A-Lamp Fixture	100	0.300	780	3	Re-Lamp with (1) 18 Watt LED A21	18	0.054	140
CORNPLANTER FORESTRY DISTRICT 14	DISTRICT OFFICE GARAGE BAYS (BLDG 14-G-1)		INTERIOR		LARGE WORK BAY	6	T8 1x4 3-Lamp Industrial Strip Fixture	84	0.504	1,311	6	Retrofit with (3) 12.5 Watt LED T8 4' Lamps; Direct Wire to Socket	37.5	0.225	585
CORNPLANTER FORESTRY DISTRICT 14	DISTRICT OFFICE GARAGE BAYS (BLDG 14-G-1)		EXTERIOR		EXTERIOR	1	50 Watt Metal Halide Wall Pack Fixture	72	0.072	315	1	New 24 Watt LED Wall Pack Fixture; Non-Dark Sky	25	0.025	110
RYERSON STATE PARK	PARK OFFICE & VISITOR CENTER		EXTERIOR		RESTROOM-M/W EXTERIOR	2	T8 1x4 1-Lamp Vanity Fixture	30	0.060	31	2	Retrofit with (1) 12.5 Watt LED T8 4' Lamps; Direct Wire to Socket	12.5	0.025	13
RYERSON STATE PARK	PARK OFFICE & VISITOR CENTER		EXTERIOR		RESTROOM-M/W EXTERIOR	2	T8 1x4 1-Lamp Vanity Fixture	30	0.060	232	2	Retrofit with (1) 12.5 Watt LED T8 4' Lamps; Direct Wire to Socket	12.5	0.025	97

©2013 Energy Systems Group, LLC

EXISTING FIXTURES											PROPOSED FIXTURE UPGRADE				
Park/Building Name	Building	Building #	Phase	Floor	Room Description	Qty	Description	Watts	kW	kWh	Qty	Description	Watts	kW	kWh
RYERSON STATE PARK	PARK OFFICE & VISITOR CENTER		INTERIOR		LOBBY	5	T8 2x4 3-Lamp Troffer Fixture; Parabolic	84	0.420	944	5	Retrofit with (3) 12.5 Watt LED T8 4' Lamps; Direct Wire to Socket	37.5	0.188	422
RYERSON STATE PARK	PARK OFFICE & VISITOR CENTER		INTERIOR		LOBBY	1	T8 2x4 3-Lamp Troffer Fixture; Parabolic	84	0.084	189	1	Retrofit with (3) 12.5 Watt LED T8 4' Lamps; Direct Wire to Socket	37.5	0.038	84
RYERSON STATE PARK	PARK OFFICE & VISITOR CENTER		INTERIOR		LOBBY	1	3 Watt LED 2-Lamp Exit Sign	3	0.003	26	1	No Retrofit	3	0.003	26
RYERSON STATE PARK	PARK OFFICE & VISITOR CENTER		INTERIOR		OFFICE - CORNER	3	T8 2x4 3-Lamp Troffer Fixture; Parabolic	84	0.252	566	3	Retrofit with (3) 12.5 Watt LED T8 4' Lamps; Direct Wire to Socket	37.5	0.113	253
RYERSON STATE PARK	PARK OFFICE & VISITOR CENTER		INTERIOR		OFFICE - OPPOSITE CORNER	4	T8 2x4 3-Lamp Troffer Fixture; Parabolic	84	0.336	755	4	Retrofit with (3) 12.5 Watt LED T8 4' Lamps; Direct Wire to Socket	37.5	0.150	337
RYERSON STATE PARK	PARK OFFICE & VISITOR CENTER		INTERIOR		CLOSET	1	13 Watt Plug-In CFL 8" Downlight Fixture	14	0.014	14	1	No Retrofit	14	0.014	14
RYERSON STATE PARK	PARK OFFICE & VISITOR CENTER		INTERIOR		MARY'S OFFICE	3	T8 2x4 3-Lamp Troffer Fixture; Parabolic	84	0.252	566	3	Retrofit with (3) 12.5 Watt LED T8 4' Lamps; Direct Wire to Socket	37.5	0.113	253
RYERSON STATE PARK	PARK OFFICE & VISITOR CENTER		INTERIOR		MARY'S OFFICE	1	13 Watt Plug-In CFL 8" Downlight Fixture	14	0.014	31	1	No Retrofit	14	0.014	31
RYERSON STATE PARK	PARK OFFICE & VISITOR CENTER		INTERIOR		FILE ROOM	2	T8 1x4 2-Lamp Wrap Fixture	62	0.124	279	2	Retrofit with (2) 12.5 Watt LED T8 4' Lamps; Direct Wire to Socket	25	0.050	112
RYERSON STATE PARK	PARK OFFICE & VISITOR CENTER		INTERIOR		COPY	2	T8 1x4 2-Lamp Wrap Fixture	62	0.124	279	2	Retrofit with (2) 12.5 Watt LED T8 4' Lamps; Direct Wire to Socket	25	0.050	112
RYERSON STATE PARK	PARK OFFICE & VISITOR CENTER		INTERIOR		BREAK ROOM	4	T8 2x4 3-Lamp Troffer Fixture; Parabolic	84	0.336	755	4	Retrofit with (3) 12.5 Watt LED T8 4' Lamps; Direct Wire to Socket	37.5	0.150	337
RYERSON STATE PARK	PARK OFFICE & VISITOR CENTER		INTERIOR		RESTROOM	1	T8 1x4 1-Lamp Vanity Fixture	30	0.030	116	1	Retrofit with (1) 12.5 Watt LED T8 4' Lamps; Direct Wire to Socket	12.5	0.013	48
RYERSON STATE PARK	PARK OFFICE & VISITOR CENTER		INTERIOR		RESTROOM	1	T8 1x4 2-Lamp Wrap Fixture	62	0.062	240	1	Retrofit with (2) 12.5 Watt LED T8 4' Lamps; Direct Wire to Socket	25	0.025	97
RYERSON STATE PARK	PARK OFFICE & VISITOR CENTER		INTERIOR		MECHINICAL	2	T8 1x4 2-Lamp Wrap Fixture	62	0.124	124	2	Retrofit with (2) 12.5 Watt LED T8 4' Lamps; Direct Wire to Socket	25	0.050	50
RYERSON STATE PARK	PARK OFFICE & VISITOR CENTER		INTERIOR		OFFICE	2	T8 2x4 3-Lamp Troffer Fixture; Parabolic	84	0.168	378	2	Retrofit with (3) 12.5 Watt LED T8 4' Lamps; Direct Wire to Socket	37.5	0.075	169
RYERSON STATE PARK	PARK OFFICE & VISITOR CENTER		INTERIOR		CLASS ROOM	4	T8 1x4 4-Lamp Wrap Fixture; Difficult Access	106	0.424	953	4	Retrofit with (4) 14 Watt LED T8 4' Lamps and (2) Dimming Driver	50	0.200	450
RYERSON STATE PARK	PARK OFFICE & VISITOR CENTER		INTERIOR		CLASS ROOM	21	T8 1x4 4-Lamp Wrap Fixture	106	2.226	5,004	21	Retrofit with (4) 12.5 Watt LED T8 4' Lamps; Direct Wire to Socket	50	1.050	2,360
RYERSON STATE PARK	PARK OFFICE & VISITOR CENTER		INTERIOR		CLASS ROOM	6	65 Watt Incandescent R30 Fixture	65	0.390	877	6	Re-Lamp with (1) 10 Watt LED BR30	10	0.060	135
RYERSON STATE PARK	PARK OFFICE & VISITOR CENTER		INTERIOR		CLOSET	1	T12 1x4 2-Lamp Wrap Fixture	72	0.072	72	1	Retrofit with (2) 12.5 Watt LED T8 4' Lamps; Direct Wire to Socket	25	0.025	25
RYERSON STATE PARK	PARK OFFICE & VISITOR CENTER		INTERIOR		CLASS ROOM	1	3 Watt LED 2-Lamp Exit Sign	3	0.003	26	1	No Retrofit	3	0.003	26
RYERSON STATE PARK	PARK OFFICE & VISITOR CENTER		INTERIOR		CLOSET	1	T8 1x4 2-Lamp Wrap Fixture	62	0.062	62	1	Retrofit with (2) 12.5 Watt LED T8 4' Lamps; Direct Wire to Socket	25	0.025	25
RYERSON STATE PARK	PARK OFFICE & VISITOR CENTER		INTERIOR		SECRETARY OFFICE	4	T8 2x4 3-Lamp Troffer Fixture; Parabolic	84	0.336	755	4	Retrofit with (3) 12.5 Watt LED T8 4' Lamps; Direct Wire to Socket	37.5	0.150	337
RYERSON STATE PARK	PARK OFFICE & VISITOR CENTER		INTERIOR		HALLWAY	3	T8 2x4 3-Lamp Troffer Fixture; Parabolic	84	0.252	566	3	Retrofit with (3) 12.5 Watt LED T8 4' Lamps; Direct Wire to Socket	37.5	0.113	253
RYERSON STATE PARK	PARK OFFICE & VISITOR CENTER		INTERIOR		HALLWAY	3	T8 2x4 3-Lamp Troffer Fixture; Parabolic	84	0.252	566	3	Retrofit with (3) 12.5 Watt LED T8 4' Lamps; Direct Wire to Socket	37.5	0.113	253
RYERSON STATE PARK	PARK OFFICE & VISITOR CENTER		INTERIOR		HALLWAY	4	3 Watt LED 2-Lamp Exit Sign	3	0.012	105	4	No Retrofit	3	0.012	105
RYERSON STATE PARK	PARK OFFICE & VISITOR CENTER		INTERIOR		FRONT & BACK	1	150 Watt Metal Halide Dusk to Dawn Fixture	180	0.180	405	1	New 26 Watt LED Dusk to Dawn Barnyard Fixture	26	0.026	58

©2013 Energy Systems Group, LLC

EXISTING FIXTURES											PROPOSED FIXTURE UPGRADE				
Park/Building Name	Building	Building #	Phase	Floor	Room Description	Qty	Description	Watts	kW	kWh	Qty	Description	Watts	kW	kWh
RYERSON STATE PARK	PARK OFFICE & VISITOR CENTER		INTERIOR		FRONT & BACK	1	42 Watt Plug-In CFL Wall Pack Fixture	45	0.045	101	1	No Retrofit	45	0.045	101
RYERSON STATE PARK	PARK OFFICE & VISITOR CENTER		INTERIOR		FRONT & BACK	10	60 Watt Incandescent A-Lamp Downlight Fixture	60	0.600	1,349	10	Re-Lamp with (1) 10 Watt LED BR30	10	0.100	225
RYERSON STATE PARK	PARK OFFICE & VISITOR CENTER		INTERIOR		FRONT & BACK	2	Existing LED Fixture; No Retrofit	40	0.080	180	2	No Retrofit	40	0.080	180
RYERSON STATE PARK	MAINTENANCE SHOP		INTERIOR		BREAK ROOM	3	T8 2x4 2-Lamp Surface Mount Fixture	62	0.186	484	3	Retrofit with (2) 12.5 Watt LED T8 4' Lamps; Direct Wire to Socket	25	0.075	195
RYERSON STATE PARK	MAINTENANCE SHOP		INTERIOR		BREAK ROOM	1	3 Watt LED 2-Lamp Exit Sign	3	0.003	26	1	No Retrofit	3	0.003	26
RYERSON STATE PARK	MAINTENANCE SHOP		INTERIOR		LAUNDRY	4	T8 1x4 2-Lamp Industrial Strip Fixture	62	0.248	645	4	Retrofit with (2) 12.5 Watt LED T8 4' Lamps; Direct Wire to Socket	25	0.100	260
RYERSON STATE PARK	MAINTENANCE SHOP		INTERIOR		LAUNDRY	1	3 Watt LED 2-Lamp Exit Sign	3	0.003	26	1	No Retrofit	3	0.003	26
RYERSON STATE PARK	MAINTENANCE SHOP		INTERIOR		OFFICE	2	T8 2x4 2-Lamp Surface Mount Fixture	62	0.124	323	2	Retrofit with (2) 12.5 Watt LED T8 4' Lamps; Direct Wire to Socket	25	0.050	130
RYERSON STATE PARK	MAINTENANCE SHOP		INTERIOR		HALLWAY	2	T8 2x4 2-Lamp Surface Mount Fixture	62	0.124	323	2	Retrofit with (2) 12.5 Watt LED T8 4' Lamps; Direct Wire to Socket	25	0.050	130
RYERSON STATE PARK	MAINTENANCE SHOP		INTERIOR		HALLWAY	1	T8 1x4 2-Lamp Vaportight Fixture	62	0.062	161	1	Retrofit with (2) 12.5 Watt LED T8 4' Lamps; Direct Wire to Socket	25	0.025	65
RYERSON STATE PARK	MAINTENANCE SHOP		INTERIOR		RESTROOM	1	T8 1x4 2-Lamp Vaportight Fixture	62	0.062	161	1	Retrofit with (2) 12.5 Watt LED T8 4' Lamps; Direct Wire to Socket	25	0.025	65
RYERSON STATE PARK	MAINTENANCE SHOP		INTERIOR		RESTROOM	1	T8 2x2 1-Lamp Vanity Fixture	22	0.022	57	1	Retrofit with (1) 10 Watt LED T8 2' Lamp; Direct Wire to Socket	10	0.010	26
RYERSON STATE PARK	MAINTENANCE SHOP		INTERIOR		SHOWER	2	T8 1x4 2-Lamp Vaportight Fixture	62	0.124	323	2	Retrofit with (2) 12.5 Watt LED T8 4' Lamps; Direct Wire to Socket	25	0.050	130
RYERSON STATE PARK	MAINTENANCE SHOP		INTERIOR		SHOP	26	T8 1x4 2-Lamp Vaportight Fixture; Difficult Access	62	1.612	4,193	26	Retrofit with (2) 12.5 Watt LED T8 4' Lamps; Direct Wire to Socket; Difficult Access	25	0.650	1,691
RYERSON STATE PARK	MAINTENANCE SHOP		INTERIOR		UPPER STORAGE	4	T8 1x4 2-Lamp Vaportight Fixture	62	0.248	248	4	Retrofit with (2) 12.5 Watt LED T8 4' Lamps; Direct Wire to Socket	25	0.100	100
RYERSON STATE PARK	MAINTENANCE SHOP		INTERIOR		UPPER STORAGE	4	60 Watt Incandescent A-Lamp Jelly Jar Fixture	60	0.240	240	4	Re-Lamp with (1) 10 Watt LED A19	10	0.040	40
RYERSON STATE PARK	MAINTENANCE SHOP		INTERIOR		TOOL ROOM	1	T8 1x4 2-Lamp Vaportight Fixture	62	0.062	161	1	Retrofit with (2) 12.5 Watt LED T8 4' Lamps; Direct Wire to Socket	25	0.025	65
RYERSON STATE PARK	MAINTENANCE SHOP		INTERIOR		SHOP	2	3 Watt LED 2-Lamp Exit Sign	3	0.006	53	2	No Retrofit	3	0.006	53
RYERSON STATE PARK	MAINTENANCE SHOP		EXTERIOR		EXTERIOR BACK	2	100 Watt Metal Halide Wall Pack Fixture	125	0.250	1,095	2	New 24 Watt LED Wall Pack Fixture; Non-Dark Sky	25	0.050	219
RYERSON STATE PARK	MAINTENANCE SHOP		EXTERIOR		FRONT & BACK	4	100 Watt Metal Halide Wall Pack Fixture	125	0.500	2,190	4	New 24 Watt LED Wall Pack Fixture; Non-Dark Sky	25	0.100	438
RYERSON STATE PARK	MAINTENANCE SHOP		EXTERIOR		FRONT & BACK	2	100 Watt Metal Halide Wall Pack Fixture	125	0.250	1,095	2	New 24 Watt LED Wall Pack Fixture; Non-Dark Sky	25	0.050	219
RYERSON STATE PARK	OLD MAINTENANCE-STORAGE		INTERIOR		TRUCK BAY	4	T12 1x8 2-Lamp Strip Fixture with 60 Watt Lamps	123	0.492	1,280	4	Retrofit with (4) 12.5 Watt LED T8 4' Lamps and (1) 1x8 4-Lamp Strip Kit; Direct Wire to Socket	50	0.200	520
RYERSON STATE PARK	OLD MAINTENANCE-STORAGE		INTERIOR		RESTROOM	1	60 Watt Incandescent A-Lamp Fixture	60	0.060	156	1	Re-Lamp with (1) 10 Watt LED A19	10	0.010	26
RYERSON STATE PARK	OLD MAINTENANCE-STORAGE		INTERIOR		PAINT CLOSET	1	60 Watt Incandescent A-Lamp Jelly Jar Fixture	60	0.060	60	1	Re-Lamp with (1) 10 Watt LED A19	10	0.010	10
RYERSON STATE PARK	OLD MAINTENANCE-STORAGE		INTERIOR		TRUCK BAY	1	150 Watt Incandescent A-Lamp Fixture	150	0.150	390	1	Re-Lamp with (1) 18 Watt LED A21	18	0.018	47
RYERSON STATE PARK	OLD MAINTENANCE-STORAGE		INTERIOR		TRUCK BAY	1	150 Watt Incandescent A-Lamp Fixture	150	0.150	390	1	Re-Lamp with (1) 18 Watt LED A21	18	0.018	47

©2013 Energy Systems Group, LLC

EXISTING FIXTURES											PROPOSED FIXTURE UPGRADE				
Park/Building Name	Building	Building #	Phase	Floor	Room Description	Qty	Description	Watts	kW	kWh	Qty	Description	Watts	kW	kWh
RYERSON STATE PARK	OLD MAINTENANCE-STORAGE		INTERIOR		TRUCK BAY	2	32 Watt Compact Fluorescent Fixture	32	0.064	166	2	Re-Lamp with (1) 10 Watt LED A19	10	0.020	52
RYERSON STATE PARK	OLD MAINTENANCE-STORAGE		EXTERIOR		EXTERIOR	1	60 Watt A-Lamp; Par Holder	60	0.060	263	1	Re-Lamp with (1) 10 Watt LED PAR30	10	0.010	44
RYERSON STATE PARK	OLD MAINTENANCE-STORAGE		EXTERIOR		EXTERIOR	1	60 Watt Incandescent 2-Lamp Fixture	120	0.120	526	1	Re-Lamp with (2) 10 Watt LED A19	20	0.020	88
RYERSON STATE PARK	OLD MAINTENANCE-STORAGE		INTERIOR		BACK SHED	3	60 Watt Incandescent A-Lamp Fixture	60	0.180	468	3	Re-Lamp with (1) 10 Watt LED A19	10	0.030	78
RYERSON STATE PARK	OLD MAINTENANCE-STORAGE		INTERIOR		BACK SHED	1	T8 1x4 2-Lamp Industrial Strip Fixture	62	0.062	161	1	Retrofit with (2) 12.5 Watt LED T8 4' Lamps; Direct Wire to Socket	25	0.025	65
RYERSON STATE PARK	OLD MAINTENANCE-STORAGE		INTERIOR		BACK SHED	4	T12 1x4 2-Lamp Industrial Strip Fixture	72	0.288	749	4	Retrofit with (2) 12.5 Watt LED T8 4' Lamps; Direct Wire to Socket	25	0.100	260
RYERSON STATE PARK	COTTAGE 2		EXTERIOR		PORCH	1	75 Watt Incandescent A-Lamp Fixture	75	0.075	329	1	Re-Lamp with (1) 10 Watt LED A19	10	0.010	44
RYERSON STATE PARK	COTTAGE 2		INTERIOR		SITTING	1	40 Watt Incandescent 3-Lamp Fixture	120	0.120	444	1	Re-Lamp with (3) 7 Watt LED A19	21	0.021	78
RYERSON STATE PARK	COTTAGE 2		INTERIOR		BED	1	75 Watt Incandescent A-Lamp Jelly Jar Fixture	75	0.075	278	1	Re-Lamp with (1) 10 Watt LED A19	10	0.010	37
RYERSON STATE PARK	COTTAGE 1		EXTERIOR		PORCH	1	75 Watt Incandescent A-Lamp Fixture	75	0.075	329	1	Re-Lamp with (1) 10 Watt LED A19	10	0.010	44
RYERSON STATE PARK	COTTAGE 1		INTERIOR		SITTING	1	40 Watt Incandescent 3-Lamp Fixture	120	0.120	444	1	Re-Lamp with (3) 7 Watt LED A19	21	0.021	78
RYERSON STATE PARK	COTTAGE 1		INTERIOR		BED	1	75 Watt Incandescent A-Lamp Jelly Jar Fixture	75	0.075	278	1	Re-Lamp with (1) 10 Watt LED A19	10	0.010	37
RYERSON STATE PARK	CAMP GROUND RESTROOM		INTERIOR		MENS RESTROOM	2	75 Watt Incandescent A-Lamp Fixture	75	0.150	556	2	Re-Lamp with (1) 10 Watt LED A19	10	0.020	74
RYERSON STATE PARK	CAMP GROUND RESTROOM		INTERIOR		WOMENS RESTROOM	2	13 Watt Compact Fluorescent Fixture	13	0.026	96	2	Re-Lamp with (1) 10 Watt LED A19	10	0.020	74
RYERSON STATE PARK	CAMP GROUND RESTROOM		EXTERIOR		EXTERIOR	2	75 Watt Incandescent A-Lamp; PAR Holder	75	0.150	657	2	Re-Lamp with (1) 10 Watt LED PAR30	10	0.020	88
RYERSON STATE PARK	CAMP GROUND RESTROOM		INTERIOR		PIPE CHASE	1	60 Watt Incandescent A-Lamp Fixture	60	0.060	60	1	Re-Lamp with (1) 10 Watt LED A19	10	0.010	10
RYERSON STATE PARK	GROUP TENT RESTROOMS		INTERIOR		PIPE CHASE	1	75 Watt Incandescent A-Lamp Fixture	75	0.075	75	1	Re-Lamp with (1) 10 Watt LED A19	10	0.010	10
RYERSON STATE PARK	GROUP TENT RESTROOMS		INTERIOR		WOMENS RESTROOM	1	75 Watt Incandescent A-Lamp Fixture	75	0.075	278	1	Re-Lamp with (1) 10 Watt LED A19	10	0.010	37
RYERSON STATE PARK	GROUP TENT RESTROOMS		INTERIOR		MENS RESTROOM	1	75 Watt Incandescent A-Lamp Fixture	75	0.075	278	1	Re-Lamp with (1) 10 Watt LED A19	10	0.010	37
RYERSON STATE PARK	POOL PUMP HOUSE		INTERIOR		BASEMENT PUMP ROOM	8	23 Watt Compact Fluorescent Jelly Jar	23	0.184	479	8	Re-Lamp with (1) 10 Watt LED A19	10	0.080	208
RYERSON STATE PARK	POOL PUMP HOUSE		INTERIOR		BASEMENT PUMP ROOM	1	75 Watt Incandescent A-Lamp Jelly Jar Fixture	75	0.075	195	1	Re-Lamp with (1) 10 Watt LED A19	10	0.010	26
RYERSON STATE PARK	POOL PUMP HOUSE		INTERIOR		BASEMENT PUMP ROOM 2	2	23 Watt Compact Fluorescent Jelly Jar	23	0.046	120	2	Re-Lamp with (1) 10 Watt LED A19	10	0.020	52
RYERSON STATE PARK	POOL PUMP HOUSE		INTERIOR		UPPER STORAGE	10	75 Watt Incandescent A-Lamp Jelly Jar Fixture	75	0.750	750	10	Re-Lamp with (1) 10 Watt LED A19	10	0.100	100
RYERSON STATE PARK	POOL SHOWER HOUSE		INTERIOR		PIPE CHASE	2	T8 1x4 1-Lamp Wrap Fixture	30	0.060	60	2	Retrofit with (1) 12.5 Watt LED T8 4' Lamps; Direct Wire to Socket	12.5	0.025	25
RYERSON STATE PARK	POOL SHOWER HOUSE		INTERIOR		WOMENS RESTROOM	7	13 Watt Plug-In CFL 2-Lamp Downlight Fixture	26	0.182	674	7	Retrofit with 9 Watt LED 6" Downlight	9	0.063	233
RYERSON STATE PARK	POOL SHOWER HOUSE		INTERIOR		WOMENS RESTROOM	3	T8 1x4 2-Lamp Vanity Fixture	62	0.186	689	3	Retrofit with (2) 12.5 Watt LED T8 4' Lamps; Direct Wire to Socket	25	0.075	278

©2013 Energy Systems Group, LLC

EXISTING FIXTURES											PROPOSED FIXTURE UPGRADE				
Park/Building Name	Building	Building #	Phase	Floor	Room Description	Qty	Description	Watts	kW	kWh	Qty	Description	Watts	kW	kWh
RYERSON STATE PARK	POOL SHOWER HOUSE		INTERIOR		VENDING HALL	5	13 Watt Plug-In CFL 2-Lamp Downlight Fixture	26	0.130	596	5	Retrofit with 9 Watt LED 6" Downlight	9	0.045	206
RYERSON STATE PARK	POOL SHOWER HOUSE		INTERIOR		JANITOR CLOSET	1	T8 1x4 2-Lamp Wrap Fixture	62	0.062	284	1	Retrofit with (2) 12.5 Watt LED T8 4' Lamps; Direct Wire to Socket	25	0.025	115
RYERSON STATE PARK	POOL SHOWER HOUSE		INTERIOR		HC RESTROOM	1	T8 1x4 2-Lamp Vanity Fixture	62	0.062	230	1	Retrofit with (2) 12.5 Watt LED T8 4' Lamps; Direct Wire to Socket	25	0.025	93
RYERSON STATE PARK	POOL SHOWER HOUSE		INTERIOR		MECHINICAL	1	T8 1x4 2-Lamp Wrap Fixture	62	0.062	284	1	Retrofit with (2) 12.5 Watt LED T8 4' Lamps; Direct Wire to Socket	25	0.025	115
RYERSON STATE PARK	POOL SHOWER HOUSE		INTERIOR		MENS RESTROOM	7	13 Watt Plug-In CFL 2-Lamp Downlight Fixture	26	0.182	674	7	Retrofit with 9 Watt LED 6" Downlight	9	0.063	233
RYERSON STATE PARK	POOL SHOWER HOUSE		INTERIOR		MENS RESTROOM	3	T8 1x4 2-Lamp Vanity Fixture	62	0.186	689	3	Retrofit with (2) 12.5 Watt LED T8 4' Lamps; Direct Wire to Socket	25	0.075	278
RYERSON STATE PARK	POOL SHOWER HOUSE		EXTERIOR		EXTERIOR	8	26 Watt Plug-In CFL Wall Pack Fixture	29	0.232	1,016	8	New 24 Watt LED Wall Pack Fixture; Non-Dark Sky	25	0.200	876
RYERSON STATE PARK	POOL SHOWER HOUSE		INTERIOR		PIPE CHASE	2	T8 1x4 1-Lamp Wrap Fixture	30	0.060	60	2	Retrofit with (1) 12.5 Watt LED T8 4' Lamps; Direct Wire to Socket	12.5	0.025	25
RYERSON STATE PARK	AMPITHEATRE		EXTERIOR		THEATRE POLE	1	100 Watt High Pressure Sodium Dusk to Dawn Fixture	125	0.125	548	1	New 26 Watt LED Dusk to Dawn Barnyard Fixture	26	0.026	114
RYERSON STATE PARK	POOL OFFICE		EXTERIOR		EXTERIOR	1	300 Watt Quartz Flood Fixture	300	0.300	1,314	1	New 52 Watt LED Flood Fixture	54	0.054	237
RYERSON STATE PARK	POOL OFFICE		INTERIOR		OFFICE	2	T8 1x4 2-Lamp Wrap Fixture	62	0.124	279	2	Retrofit with (2) 12.5 Watt LED T8 4' Lamps; Direct Wire to Socket	25	0.050	112
RYERSON STATE PARK	POOL OFFICE		INTERIOR		RESTROOM	1	T8 1x4 2-Lamp Vanity Fixture	62	0.062	139	1	Retrofit with (2) 12.5 Watt LED T8 4' Lamps; Direct Wire to Socket	25	0.025	56
RYERSON STATE PARK	SEWAGE PLANT		INTERIOR		OFFICE/LAB	2	T8 1x4 2-Lamp Wrap Fixture	62	0.124	323	2	Retrofit with (2) 12.5 Watt LED T8 4' Lamps; Direct Wire to Socket	25	0.050	130
RYERSON STATE PARK	SEWAGE PLANT		EXTERIOR		EXTERIOR	1	26 Watt Plug-In CFL Wall Pack Fixture	29	0.029	127	1	New 24 Watt LED Wall Pack Fixture; Non-Dark Sky	25	0.025	110
RYERSON STATE PARK	PLAYGROUND COMFORT STATION		INTERIOR		PIPE CHASE	1	No Lights; Area(s) Not Included in Scope/Pricing	0	0.000	0	1	No Retrofit	0	0.000	0
RYERSON STATE PARK	OLD CONCESSION STAND		INTERIOR		NOT IN USE	1	Not in Use; Area(s) Not Included in Scope/Pricing	0	0.000	0	1	No Retrofit	0	0.000	0
RYERSON STATE PARK	PRESSURE STATION		INTERIOR		PUMP ROOM	1	75 Watt Incandescent A-Lamp Fixture	75	0.075	75	1	Re-Lamp with (1) 10 Watt LED A19	10	0.010	10
POINT STATE PARK	MAINTENANCE BUILDING		INTERIOR		MANAGER OFFICE	4	T8 2x4 2-Lamp Troffer Fixture	62	0.248	645	4	Retrofit with (2) 12.5 Watt LED T8 4' Lamps; Direct Wire to Socket	25	0.100	260
POINT STATE PARK	MAINTENANCE BUILDING		INTERIOR		BREAK ROOM	3	T8 2x4 4-Lamp Troffer Fixture	106	0.318	827	3	Retrofit with (4) 12.5 Watt LED T8 4' Lamps; Direct Wire to Socket	50	0.150	390
POINT STATE PARK	MAINTENANCE BUILDING		INTERIOR		RESTROOM	2	T8 2x2 2-Lamp Wrap Fixture	36	0.072	187	2	Retrofit with (2) 10 Watt LED T8 2' Lamps; Direct Wire to Socket	20	0.040	104
POINT STATE PARK	MAINTENANCE BUILDING		INTERIOR		MANAGERS OFFICE	2	T8 1x4 2-Lamp Wrap Fixture	62	0.124	323	2	Retrofit with (2) 12.5 Watt LED T8 4' Lamps; Direct Wire to Socket	25	0.050	130
POINT STATE PARK	MAINTENANCE BUILDING		INTERIOR		MANAGERS OFFICE	2	T8 2x4 4-Lamp Surface Mount Fixture	106	0.212	551	2	Retrofit with (4) 12.5 Watt LED T8 4' Lamps; Direct Wire to Socket	50	0.100	260
POINT STATE PARK	MAINTENANCE BUILDING		INTERIOR		MANAGERS OFFICE	1	T8 2x2 2-Lamp U-Lamp Troffer Fixture with 6" Lamps	62	0.062	161	1	Retrofit with (2) 10 Watt LED T8 2' Lamps and (1) 2x2 2-Lamp White Reflector Kit; Direct Wire to Socket	20	0.020	52
POINT STATE PARK	MAINTENANCE BUILDING		INTERIOR		RESTROOM	1	T8 1x4 2-Lamp Wrap Fixture; Damaged	62	0.062	161	1	New 1x4 2-Lamp Wrap Fixture with (2) 12.5 Watt LED T8 4' Lamp; Direct Wire to Socket	25	0.025	65
POINT STATE PARK	MAINTENANCE BUILDING		INTERIOR		RESTROOM	1	18 Watt Plug-In CFL Fixture	20	0.020	52	1	No Retrofit	20	0.020	52
POINT STATE PARK	MAINTENANCE BUILDING		INTERIOR		RESTROOM	1	75 Watt Incandescent A-Lamp Jelly Jar Fixture	75	0.075	195	1	Re-Lamp with (1) 10 Watt LED A19	10	0.010	26

©2013 Energy Systems Group, LLC

EXISTING FIXTURES											PROPOSED FIXTURE UPGRADE				
Park/Building Name	Building	Building #	Phase	Floor	Room Description	Qty	Description	Watts	kW	kWh	Qty	Description	Watts	kW	kWh
POINT STATE PARK	MAINTENANCE BUILDING		INTERIOR		BACK LOCKER	2	T8 2x4 4-Lamp Surface Mount Fixture	106	0.212	551	2	Retrofit with (4) 12.5 Watt LED T8 4' Lamps; Direct Wire to Socket	50	0.100	260
POINT STATE PARK	MAINTENANCE BUILDING		INTERIOR		SHOP AREA	41	Existing LED Fixture; No Retrofit	30	1.230	3,199	41	No Retrofit	30	1.230	3,199
POINT STATE PARK	MAINTENANCE BUILDING		INTERIOR		SHOP AREA	10	T8 1x4 2-Lamp Industrial Strip Fixture	62	0.620	1,613	10	Retrofit with (2) 12.5 Watt LED T8 4' Lamps; Direct Wire to Socket	25	0.250	650
POINT STATE PARK	MAINTENANCE BUILDING		EXTERIOR		EXTERIOR	1	90 Watt Incandescent PAR38 2-Lamp Fixture	180	0.180	788	1	Re-Lamp with (2) 17 Watt LED PAR38	34	0.034	149
POINT STATE PARK	MAINTENANCE BUILDING		EXTERIOR		EXTERIOR	3	150 Watt High Pressure Sodium Wall Pack Fixture	188	0.564	2,470	3	New 37 Watt LED Wall Pack Fixture; Non-Dark Sky	39	0.117	512
POINT STATE PARK	MAINTENANCE BUILDING		EXTERIOR		EXTERIOR	2	Existing LED Fixture; No Retrofit	40	0.080	350	2	No Retrofit	40	0.080	350
POINT STATE PARK	MAINTENANCE BUILDING		EXTERIOR		EXTERIOR	1	Existing LED Fixture; No Retrofit	40	0.040	175	1	No Retrofit	40	0.040	175
POINT STATE PARK	MAINTENANCE BUILDING		EXTERIOR		EXTERIOR	1	100 Watt Metal Halide Flood Fixture; Trunion	1080	1.080	4,730	1	New 300 Watt LED Flood Fixture; Trunion	315	0.315	1,380
POINT STATE PARK	PUMP HOUSE		INTERIOR		MAIN	17	T8 1x4 2-Lamp Industrial Strip Fixture; Turret	62	1.054	2,741	17	New 1x4 2-Lamp Industrial Fixture with (2) 12.5 Watt LED T8 4' Lamp; Direct Wire to Socket	25	0.425	1,105
POINT STATE PARK	PUMP HOUSE		INTERIOR		OFFICE	1	T8 1x4 2-Lamp Industrial Strip Fixture; Turret	62	0.062	161	1	New 1x4 2-Lamp Industrial Fixture with (2) 12.5 Watt LED T8 4' Lamp; Direct Wire to Socket	25	0.025	65
POINT STATE PARK	PUMP HOUSE		INTERIOR		RESTROOM	1	T8 1x2 2-Lamp Vanity Fixture	36	0.036	94	1	Retrofit with (2) 10 Watt LED T8 2' Lamps; Direct Wire to Socket	20	0.020	52
POINT STATE PARK	PUMP HOUSE		EXTERIOR		EXTERIOR	1	Existing LED Fixture; No Retrofit	40	0.040	175	1	No Retrofit	40	0.040	175
POINT STATE PARK	PUMP HOUSE		EXTERIOR		EXTERIOR	1	Existing LED Fixture; No Retrofit	40	0.040	175	1	No Retrofit	40	0.040	175
POINT STATE PARK	PUMP HOUSE		EXTERIOR		EXTERIOR	2	1000 Watt Metal Halide Flood Fixture	1085	2.170	9,505	2	New 300 Watt LED Flood Fixture	315	0.630	2,759
POINT STATE PARK	PUMP HOUSE		INTERIOR		MEZZ. 2ND FLOOR	2	T8 1x4 2-Lamp Industrial Strip Fixture; Turret	62	0.124	323	2	New 1x4 2-Lamp Industrial Fixture with (2) 12.5 Watt LED T8 4' Lamp; Direct Wire to Socket	25	0.050	130
POINT STATE PARK	PUMP HOUSE		INTERIOR		ELECTRIC	6	T8 1x4 2-Lamp Industrial Strip Fixture; Turret	62	0.372	372	6	New 1x4 2-Lamp Industrial Fixture with (2) 12.5 Watt LED T8 4' Lamp; Direct Wire to Socket	25	0.150	150
POINT STATE PARK	PUMP HOUSE		INTERIOR		MECHANICAL	2	T8 1x4 2-Lamp Industrial Strip Fixture; Turret	62	0.124	124	2	New 1x4 2-Lamp Industrial Fixture with (2) 12.5 Watt LED T8 4' Lamp; Direct Wire to Socket	25	0.050	50
POINT STATE PARK	PUMP HOUSE		INTERIOR		STORAGE	4	T8 1x4 2-Lamp Industrial Strip Fixture; Turret	62	0.248	248	4	New 1x4 2-Lamp Industrial Fixture with (2) 12.5 Watt LED T8 4' Lamp; Direct Wire to Socket	25	0.100	100
POINT STATE PARK	BATH HOUSE		INTERIOR		MENS RESTROOM	8	T8 1x4 1-Lamp Wrap Fixture	30	0.240	1,099	8	Retrofit with (1) 12.5 Watt LED T8 4' Lamps; Direct Wire to Socket	12.5	0.100	458
POINT STATE PARK	BATH HOUSE		INTERIOR		MENS RESTROOM	4	T8 1x4 2-Lamp Industrial Strip Fixture; Turret	62	0.248	1,136	4	New 1x4 2-Lamp Industrial Fixture with (2) 12.5 Watt LED T8 4' Lamp; Direct Wire to Socket	25	0.100	458
POINT STATE PARK	BATH HOUSE		INTERIOR		WOMENS RESTROOM	9	T8 1x4 1-Lamp Wrap Fixture	30	0.270	1,237	9	Retrofit with (1) 12.5 Watt LED T8 4' Lamps; Direct Wire to Socket	12.5	0.113	515
POINT STATE PARK	BATH HOUSE		INTERIOR		WOMENS RESTROOM - JANITOR CLOSET	1	T8 1x4 2-Lamp Industrial Strip Fixture; Turret	62	0.062	284	1	New 1x4 2-Lamp Industrial Fixture with (2) 12.5 Watt LED T8 4' Lamp; Direct Wire to Socket	25	0.025	115
POINT STATE PARK	BATH HOUSE		INTERIOR		WOMENS RESTROOM - STORAGE	1	T8 1x4 2-Lamp Industrial Strip Fixture; Turret	62	0.062	284	1	New 1x4 2-Lamp Industrial Fixture with (2) 12.5 Watt LED T8 4' Lamp; Direct Wire to Socket	25	0.025	115
POINT STATE PARK	BATH HOUSE		INTERIOR		OUTSIDE STORAGE 1	2	T8 1x4 2-Lamp Industrial Strip Fixture; Turret	62	0.124	124	2	New 1x4 2-Lamp Industrial Fixture with (2) 12.5 Watt LED T8 4' Lamp; Direct Wire to Socket	25	0.050	50
POINT STATE PARK	BATH HOUSE		INTERIOR		OUTSIDE STORAGE 2	2	T8 1x4 2-Lamp Industrial Strip Fixture; Turret	62	0.124	124	2	New 1x4 2-Lamp Industrial Fixture with (2) 12.5 Watt LED T8 4' Lamp; Direct Wire to Socket	25	0.050	50
POINT STATE PARK	BATH HOUSE		EXTERIOR		EXTERIOR	3	Existing LED Fixture; No Retrofit	40	0.120	526	3	No Retrofit	40	0.120	526

©2013 Energy Systems Group, LLC

EXISTING FIXTURES											PROPOSED FIXTURE UPGRADE				
Park/Building Name	Building	Building #	Phase	Floor	Room Description	Qty	Description	Watts	kW	kWh	Qty	Description	Watts	kW	kWh
POINT STATE PARK	BATH HOUSE		EXTERIOR		EXTERIOR	2	1000 Watt Metal Halide Flood Fixture	1085	2.170	9,505	2	New 300 Watt LED Flood Fixture	315	0.630	2,759
POINT STATE PARK	BATH HOUSE		INTERIOR		MEZZANINE 2ND FLOOR	6	T8 1x4 2-Lamp Vaportight Fixture	62	0.372	1,704	6	Retrofit with (2) 12.5 Watt LED T8 4' Lamps; Direct Wire to Socket	25	0.150	687
POINT STATE PARK	BATH HOUSE		EXTERIOR		UNDER BRIDGE	23	100 Watt High Pressure Sodium Cylinder Fixture	125	2.875	12,593	23	New 40 Watt LED Cylinder Fixture	40	0.920	4,030
POINT STATE PARK	BATH HOUSE		EXTERIOR		UNDER BRIDGE	1	100 Watt High Pressure Sodium Cylinder Fixture	125	0.125	548	1	New 40 Watt LED Cylinder Fixture	40	0.040	175
POINT STATE PARK	BATH HOUSE		EXTERIOR		LEFT SIDE	6	150 Watt High Pressure Sodium Flood Fixture; Trunion	188	1.128	4,941	6	New 26 Watt LED Flood Fixture; Trunion	26	0.156	683
POINT STATE PARK	BATH HOUSE		EXTERIOR			3	400 Watt High Pressure Sodium Flood Fixture	464	1.392	6,097	3	New 150 Watt LED Flood Fixture	155	0.465	2,037
POINT STATE PARK	BATH HOUSE		EXTERIOR		RIGHT SIDE	3	400 Watt High Pressure Sodium Flood Fixture	464	1.392	6,097	3	New 150 Watt LED Flood Fixture	155	0.465	2,037
POINT STATE PARK	BATH HOUSE		EXTERIOR			6	400 Watt High Pressure Sodium Flood Fixture; Trunion	455	2.730	11,957	6	New 150 Watt LED Flood Fixture ; Trunion	155	0.930	4,073
POINT STATE PARK	BATH HOUSE		EXTERIOR		FLAGS	3	150 Watt High Pressure Sodium Flood Fixture	188	0.564	2,470	3	New 52 Watt LED Flood Fixture	54	0.162	710
POINT STATE PARK	BATH HOUSE		INTERIOR		FILTER ROOM	8	100 Watt Metal Halide Jelly Jar Fixture	125	1.000	4,581	8	New 26 Watt LED Jelly Jar Fixture	27	0.216	989
POINT STATE PARK	BATH HOUSE		INTERIOR		ELECTRIC VAULT	5	100 Watt Metal Halide Jelly Jar Fixture	125	0.625	2,863	5	New 26 Watt LED Jelly Jar Fixture	27	0.135	618
POINT STATE PARK	BATH HOUSE		INTERIOR		CAFE THE POINT	2	T8 1x4 2-Lamp Vaportight Fixture	62	0.124	568	2	Retrofit with (2) 12.5 Watt LED T8 4' Lamps; Direct Wire to Socket	25	0.050	229
POINT STATE PARK	BATH HOUSE		INTERIOR		CAFE THE POINT	1	T8 2x3 2-Lamp Strip Fixture	49	0.049	224	1	Retrofit with (2) 12 Watt LED T8 3' Lamps; Direct Wire to Socket	24	0.024	110
POINT STATE PARK	BATH HOUSE		INTERIOR		CAFE THE POINT	1	T8 1x2 2-Lamp Wrap Fixture; Damaged	36	0.036	165	1	New 1x4 2-Lamp Wrap Fixture with (2) 10 Watt LED T8 2' Lamps; Direct Wire to Socket	20	0.020	92
POINT STATE PARK	BATH HOUSE		INTERIOR		CAFE THE POINT	1	T8 2x2 2-Lamp Wrap Fixture	36	0.036	165	1	Retrofit with (2) 10 Watt LED T8 2' Lamps; Direct Wire to Socket	20	0.020	92
POINT STATE PARK	BATH HOUSE		INTERIOR		TUNNEL TO MAINTENANCE	10	23 Watt Compact Fluorescent Wall Pack Fixture	23	0.230	1,054	10	New 24 Watt LED Wall Pack Fixture; Non-Dark Sky	25	0.250	1,145
POINT STATE PARK	BATH HOUSE		INTERIOR		LOT BOOTH	2	T12 1x4 2-Lamp Wrap Fixture	72	0.144	660	2	Retrofit with (2) 12.5 Watt LED T8 4' Lamps; Direct Wire to Socket	25	0.050	229
POINT STATE PARK	BATH HOUSE		INTERIOR		LOT BOOTH	1	400 Watt High Pressure Sodium 3-Head Flood Fixture; Trunion	1365	1.365	6,253	1	(3) New 150 Watt LED Flood Fixtures; Trunion	465	0.465	2,130
LAUREL MOUNTAIN STATE PARK	SNOW MAKING MAINTENANCE BUILDING		INTERIOR		OPEN SHOP	20	T12HO 1x8 2-Lamp Industrial Strip Fixture with 110 Watt Lamps	230	4.600	11,965	20	Retrofit with (4) 12.5 Watt LED T8 4' Lamps and (1) 1x8 4-Lamp Industrial Strip Kit; Direct Wire to Socket	50	1.000	2,601
LAUREL MOUNTAIN STATE PARK	SNOW MAKING MAINTENANCE BUILDING		INTERIOR		OPEN SHOP BENCH	3	T12HO 1x8 2-Lamp Industrial Strip Fixture with 110 Watt Lamps	230	0.690	1,795	3	Retrofit with (4) 12.5 Watt LED T8 4' Lamps and (1) 1x8 4-Lamp Industrial Strip Kit; Direct Wire to Socket	50	0.150	390
LAUREL MOUNTAIN STATE PARK	SNOW MAKING MAINTENANCE BUILDING		INTERIOR		OPEN SHOP	3	3 Watt LED 2-Lamp Exit Sign	3	0.009	79	3	No Retrofit	3	0.009	79
LAUREL MOUNTAIN STATE PARK	SNOW MAKING MAINTENANCE BUILDING		INTERIOR		OPEN SHOP	3	Existing LED Fixture; No Retrofit	20	0.060	156	3	No Retrofit	20	0.060	156
LAUREL MOUNTAIN STATE PARK	SNOW MAKING MAINTENANCE BUILDING		INTERIOR		MECHANICAL	2	T8 1x4 2-Lamp Strip Fixture	62	0.124	124	2	Retrofit with (2) 12.5 Watt LED T8 4' Lamps; Direct Wire to Socket	25	0.050	50
LAUREL MOUNTAIN STATE PARK	SNOW MAKING MAINTENANCE BUILDING		INTERIOR		TOOL ROOM	2	T8 1x4 2-Lamp Wrap Fixture; Damaged	62	0.124	323	2	New 1x4 2-Lamp Wrap Fixture with (2) 12.5 Watt LED T8 4' Lamp; Direct Wire to Socket	25	0.050	130
LAUREL MOUNTAIN STATE PARK	SNOW MAKING MAINTENANCE BUILDING		INTERIOR		BREAK ROOM	2	T8 2x4 4-Lamp Troffer Fixture	106	0.212	551	2	Retrofit with (4) 12.5 Watt LED T8 4' Lamps; Direct Wire to Socket	50	0.100	260
LAUREL MOUNTAIN STATE PARK	SNOW MAKING MAINTENANCE BUILDING		INTERIOR		CONTROL ROOM	2	T8 2x4 4-Lamp Troffer Fixture	106	0.212	551	2	Retrofit with (4) 12.5 Watt LED T8 4' Lamps; Direct Wire to Socket	50	0.100	260

©2013 Energy Systems Group, LLC

EXISTING FIXTURES												PROPOSED FIXTURE UPGRADE				
Park/Building Name	Building	Building #	Phase	Floor	Room Description	Qty	Description	Watts	kW	kWh	Qty	Description	Watts	kW	kWh
LAUREL MOUNTAIN STATE PARK	SNOW MAKING MAINTENANCE BUILDING		INTERIOR		MOUNTAIN MAINTENANCE OFFICE	2	T8 2x4 4-Lamp Troffer Fixture	106	0.212	551	2	Retrofit with (4) 12.5 Watt LED T8 4' Lamps; Direct Wire to Socket	50	0.100	260
LAUREL MOUNTAIN STATE PARK	SNOW MAKING MAINTENANCE BUILDING		INTERIOR		SKI PATROL OFFICE	2	T8 2x4 4-Lamp Troffer Fixture	106	0.212	551	2	Retrofit with (4) 12.5 Watt LED T8 4' Lamps; Direct Wire to Socket	50	0.100	260
LAUREL MOUNTAIN STATE PARK	SNOW MAKING MAINTENANCE BUILDING		INTERIOR		BREAK ROOM	2	T8 2x4 4-Lamp Troffer Fixture	106	0.212	551	2	Retrofit with (4) 12.5 Watt LED T8 4' Lamps; Direct Wire to Socket	50	0.100	260
LAUREL MOUNTAIN STATE PARK	SNOW MAKING MAINTENANCE BUILDING		INTERIOR		SKI PATROL STRETCHER	2	T12 1x8 2-Lamp Strip Fixture with 60 Watt Lamps	123	0.246	640	2	Retrofit with (4) 12.5 Watt LED T8 4' Lamps and (1) 54 Watt LED Strip Kit; Direct Wire to Socket	50	0.100	260
LAUREL MOUNTAIN STATE PARK	SNOW MAKING MAINTENANCE BUILDING		INTERIOR		SKI PATROL STRETCHER	1	3 Watt LED 2-Lamp Exit Sign	3	0.003	26	1	No Retrofit	3	0.003	26
LAUREL MOUNTAIN STATE PARK	SNOW MAKING MAINTENANCE BUILDING		INTERIOR		EXAMINATION ROOM	6	T8 2x4 4-Lamp Troffer Fixture	106	0.636	1,654	6	Retrofit with (4) 12.5 Watt LED T8 4' Lamps; Direct Wire to Socket	50	0.300	780
LAUREL MOUNTAIN STATE PARK	SNOW MAKING MAINTENANCE BUILDING		INTERIOR		MENS RESTROOM	2	T8 2x4 4-Lamp Troffer Fixture; Damaged	106	0.212	551	2	New 2x4 2-Lamp Lay-In Troffer Fixture with (2) 12.5 Watt LED T8 4' Lamp; Direct Wire to Socket	25	0.050	130
LAUREL MOUNTAIN STATE PARK	SNOW MAKING MAINTENANCE BUILDING		INTERIOR		JANITOR CLOSET	1	T8 2x4 4-Lamp Troffer Fixture; Damaged	106	0.106	106	1	New 2x4 2-Lamp Lay-In Troffer Fixture with (2) 12.5 Watt LED T8 4' Lamp; Direct Wire to Socket	25	0.025	25
LAUREL MOUNTAIN STATE PARK	SNOW MAKING MAINTENANCE BUILDING		INTERIOR		TRUCK BAY	3	T12 1x8 2-Lamp Strip Fixture with 60 Watt Lamps	123	0.369	960	3	Retrofit with (4) 12.5 Watt LED T8 4' Lamps and (1) 54 Watt LED Strip Kit; Direct Wire to Socket	50	0.150	390
LAUREL MOUNTAIN STATE PARK	SNOW MAKING MAINTENANCE BUILDING		INTERIOR		WOMENS RESTROOM	2	T8 2x4 4-Lamp Troffer Fixture; Damaged	106	0.212	551	2	New 2x4 2-Lamp Lay-In Troffer Fixture with (2) 12.5 Watt LED T8 4' Lamp; Direct Wire to Socket	25	0.050	130
LAUREL MOUNTAIN STATE PARK	SNOW MAKING MAINTENANCE BUILDING		INTERIOR		LOCKER ROOM	5	T8 2x4 4-Lamp Troffer Fixture; Damaged	106	0.530	1,379	5	New 2x4 2-Lamp Lay-In Troffer Fixture with (2) 12.5 Watt LED T8 4' Lamp; Direct Wire to Socket	25	0.125	325
LAUREL MOUNTAIN STATE PARK	SNOW MAKING MAINTENANCE BUILDING		INTERIOR		HALLWAY	2	T8 2x4 4-Lamp Troffer Fixture; Damaged	106	0.212	551	2	New 2x4 2-Lamp Lay-In Troffer Fixture with (2) 12.5 Watt LED T8 4' Lamp; Direct Wire to Socket	25	0.050	130
LAUREL MOUNTAIN STATE PARK	SNOW MAKING MAINTENANCE BUILDING		EXTERIOR		EXTERIOR	3	Existing LED Fixture; No Retrofit	40	0.120	526	3	No Retrofit	40	0.120	526
LAUREL MOUNTAIN STATE PARK	SNOW MAKING MAINTENANCE BUILDING		EXTERIOR		EXTERIOR	4	Existing LED Fixture; No Retrofit	40	0.160	701	4	No Retrofit	40	0.160	701
LAUREL MOUNTAIN STATE PARK	SNOW MAKING MAINTENANCE BUILDING		EXTERIOR		EXTERIOR	1	100 Watt Metal Halide Dusk to Dawn Fixture	125	0.125	548	1	New 26 Watt LED Dusk to Dawn Barnyard Fixture	26	0.026	114
LAUREL MOUNTAIN STATE PARK	SNOW MAKING MAINTENANCE BUILDING		EXTERIOR		EXTERIOR	1	100 Watt Metal Halide Dusk to Dawn Fixture	125	0.125	548	1	New 26 Watt LED Dusk to Dawn Barnyard Fixture	26	0.026	114
LAUREL MOUNTAIN STATE PARK	SNOW MAKING MAINTENANCE BUILDING		EXTERIOR		TANK AREA	2	250 Watt Metal Halide 2-Head Flood Fixture; Trunion	590	1.180	5,168	2	(2) New 125 Watt LED Flood Fixtures; Trunion	268	0.536	2,348
LAUREL MOUNTAIN STATE PARK	PUMP HOUSE CHLORINATOR BUILDING		INTERIOR		PUMP ROOM	8	T8 1x4 2-Lamp Vaportight Fixture	62	0.496	496	8	Retrofit with (2) 12.5 Watt LED T8 4' Lamps; Direct Wire to Socket	25	0.200	200
LAUREL MOUNTAIN STATE PARK	PUMP HOUSE CHLORINATOR BUILDING		EXTERIOR		EXTERIOR	1	100 Watt Metal Halide Dusk to Dawn Fixture	125	0.125	548	1	New 26 Watt LED Dusk to Dawn Barnyard Fixture	26	0.026	114
LAUREL MOUNTAIN STATE PARK	PUMP HOUSE CHLORINATOR BUILDING		EXTERIOR		EXTERIOR	1	95 Watt Incandescent PAR38 Fixture	95	0.095	416	1	Re-Lamp with (1) 17 Watt LED PAR38	17	0.017	74
LAUREL MOUNTAIN STATE PARK	PUMP HOUSE CHLORINATOR BUILDING		EXTERIOR		EXTERIOR	1	175 Watt Metal Halide Dusk to Dawn Fixture	213	0.213	933	1	New 26 Watt LED Dusk to Dawn Barnyard Fixture	26	0.026	114
LAUREL MOUNTAIN STATE PARK	SHED-SKI HUT		EXTERIOR		EXTERIOR	1	95 Watt Incandescent PAR38 2-Lamp Fixture	190	0.190	832	1	Re-Lamp with (2) 17 Watt LED PAR38	34	0.034	149
LAUREL MOUNTAIN STATE PARK	SKI LODGE		INTERIOR		PRIVATE LOCKER ROOM	10	Existing LED Fixture; No Retrofit	10	0.100	370	10	No Retrofit	10	0.100	370
LAUREL MOUNTAIN STATE PARK	SKI LODGE		INTERIOR		MENS RESTROOM	2	Existing LED Fixture; No Retrofit	10	0.020	52	2	No Retrofit	10	0.020	52
LAUREL MOUNTAIN STATE PARK	SKI LODGE		INTERIOR		MENS RESTROOM	3	Existing LED Fixture; No Retrofit	40	0.120	312	3	No Retrofit	40	0.120	312
LAUREL MOUNTAIN STATE PARK	SKI LODGE		INTERIOR		WOMENS RESTROOM	3	Existing LED Fixture; No Retrofit	10	0.030	78	3	No Retrofit	10	0.030	78

©2013 Energy Systems Group, LLC

EXISTING FIXTURES											PROPOSED FIXTURE UPGRADE				
Park/Building Name	Building	Building #	Phase	Floor	Room Description	Qty	Description	Watts	kW	kWh	Qty	Description	Watts	kW	kWh
LAUREL MOUNTAIN STATE PARK	SKI LODGE		INTERIOR		WOMENS RESTROOM	4	Existing LED Fixture; No Retrofit	40	0.160	416	4	No Retrofit	40	0.160	416
LAUREL MOUNTAIN STATE PARK	SKI LODGE		INTERIOR		HALLWAY	2	Existing LED Fixture; No Retrofit	40	0.080	296	2	No Retrofit	40	0.080	296
LAUREL MOUNTAIN STATE PARK	SKI LODGE		INTERIOR		UPPER LODGE	3	Existing LED Fixture; No Retrofit	40	0.120	444	3	No Retrofit	40	0.120	444
LAUREL MOUNTAIN STATE PARK	SKI LODGE		INTERIOR		UPPER LODGE	56	Existing LED Fixture; No Retrofit	20	1.120	4,148	56	No Retrofit	20	1.120	4,148
LAUREL MOUNTAIN STATE PARK	SKI LODGE		INTERIOR		CONCESSION AREA	28	Existing LED Fixture; No Retrofit	20	0.560	2,074	28	No Retrofit	20	0.560	2,074
LAUREL MOUNTAIN STATE PARK	SKI LODGE		INTERIOR		CONCESSION AREA	2	Existing LED Fixture; No Retrofit	40	0.080	296	2	No Retrofit	40	0.080	296
LAUREL MOUNTAIN STATE PARK	SKI LODGE		INTERIOR		KITCHEN	3	T8 1x4 4-Lamp Wrap Fixture	106	0.318	1,178	3	Retrofit with (4) 12.5 Watt LED T8 4' Lamps; Direct Wire to Socket	50	0.150	556
LAUREL MOUNTAIN STATE PARK	SKI LODGE		INTERIOR		HOOD	2	Existing LED Fixture; No Retrofit	10	0.020	74	2	No Retrofit	10	0.020	74
LAUREL MOUNTAIN STATE PARK	SKI LODGE		INTERIOR		RETAIL STORE	10	T8 1x4 4-Lamp Wrap Fixture	106	1.060	3,926	10	Retrofit with (4) 12.5 Watt LED T8 4' Lamps; Direct Wire to Socket	50	0.500	1,852
LAUREL MOUNTAIN STATE PARK	SKI LODGE		INTERIOR		RETAIL STORE	1	T8 1x4 4-Lamp Wrap Fixture	106	0.106	393	1	Retrofit with (4) 12.5 Watt LED T8 4' Lamps; Direct Wire to Socket	50	0.050	185
LAUREL MOUNTAIN STATE PARK	SKI LODGE		INTERIOR		TICKET BOOTH	1	Existing LED Fixture; No Retrofit	40	0.040	148	1	No Retrofit	40	0.040	148
LAUREL MOUNTAIN STATE PARK	SKI LODGE		INTERIOR		STAIRS	3	T8 1x4 2-Lamp Wrap Fixture	62	0.186	1,629	3	Retrofit with (2) 12.5 Watt LED T8 4' Lamps; Direct Wire to Socket	25	0.075	657
LAUREL MOUNTAIN STATE PARK	SKI LODGE		INTERIOR		BOOT RENTAL	7	T8 1x4 4-Lamp Wrap Fixture	106	0.742	2,748	7	Retrofit with (4) 12.5 Watt LED T8 4' Lamps; Direct Wire to Socket	50	0.350	1,296
LAUREL MOUNTAIN STATE PARK	SKI LODGE		INTERIOR		STORAGE CLOSET	1	T8 1x4 4-Lamp Wrap Fixture	106	0.106	106	1	Retrofit with (4) 12.5 Watt LED T8 4' Lamps; Direct Wire to Socket	50	0.050	50
LAUREL MOUNTAIN STATE PARK	SKI LODGE		INTERIOR		SKI RENTAL	5	T8 1x4 4-Lamp Wrap Fixture	106	0.530	1,963	5	Retrofit with (4) 12.5 Watt LED T8 4' Lamps; Direct Wire to Socket	50	0.250	926
LAUREL MOUNTAIN STATE PARK	SKI LODGE		INTERIOR		SKI RENTAL	3	Existing LED Fixture; No Retrofit	10	0.030	111	3	No Retrofit	10	0.030	111
LAUREL MOUNTAIN STATE PARK	SKI LODGE		INTERIOR		SKI RENTAL	4	T8 1x4 4-Lamp Wrap Fixture	106	0.424	1,570	4	Retrofit with (4) 12.5 Watt LED T8 4' Lamps; Direct Wire to Socket	50	0.200	741
LAUREL MOUNTAIN STATE PARK	SKI LODGE		INTERIOR		VESTIBULE	1	T8 1x4 4-Lamp Wrap Fixture	106	0.106	393	1	Retrofit with (4) 12.5 Watt LED T8 4' Lamps; Direct Wire to Socket	50	0.050	185
LAUREL MOUNTAIN STATE PARK	SKI LODGE		INTERIOR		IT CLOSET	1	T8 1x4 4-Lamp Wrap Fixture	106	0.106	106	1	Retrofit with (4) 12.5 Watt LED T8 4' Lamps; Direct Wire to Socket	50	0.050	50
LAUREL MOUNTAIN STATE PARK	SKI LODGE		INTERIOR		ELECTRIC CLOSET	1	32 Watt Compact Fluorescent Fixture	32	0.032	32	1	Re-Lamp with (1) 10 Watt LED A 19	10	0.010	10
LAUREL MOUNTAIN STATE PARK	SKI LODGE		INTERIOR		BAR	23	Existing LED Fixture; No Retrofit	20	0.460	1,704	23	No Retrofit	20	0.460	1,704
LAUREL MOUNTAIN STATE PARK	SKI LODGE		INTERIOR		BAR	9	Existing LED Fixture; No Retrofit	10	0.090	333	9	No Retrofit	10	0.090	333
LAUREL MOUNTAIN STATE PARK	SKI LODGE		INTERIOR		BAR	5	Existing LED Fixture; No Retrofit	10	0.050	185	5	No Retrofit	10	0.050	185
LAUREL MOUNTAIN STATE PARK	SKI LODGE		INTERIOR		KITCHEN	3	Existing LED Fixture; No Retrofit	30	0.090	333	3	No Retrofit	30	0.090	333
LAUREL MOUNTAIN STATE PARK	SKI LODGE		INTERIOR		HALLWAY	1	T8 1x4 2-Lamp Wrap Fixture; Damaged	62	0.062	230	1	New 1x4 2-Lamp Wrap Fixture with (2) 12.5 Watt LED T8 4' Lamp; Direct Wire to Socket	25	0.025	93
LAUREL MOUNTAIN STATE PARK	SKI LODGE		INTERIOR		HALLWAY	3	T8 1x4 2-Lamp Wrap Fixture	62	0.186	689	3	Retrofit with (2) 12.5 Watt LED T8 4' Lamps; Direct Wire to Socket	25	0.075	278

©2013 Energy Systems Group, LLC

EXISTING FIXTURES												PROPOSED FIXTURE UPGRADE				
Park/Building Name	Building	Building #	Phase	Floor	Room Description	Qty	Description	Watts	kW	kWh	Qty	Description	Watts	kW	kWh
LAUREL MOUNTAIN STATE PARK	SKI LODGE		INTERIOR		WOMENS RESTROOM	3	Existing LED Fixture; No Retrofit	10	0.030	78	3	No Retrofit	10	0.030	78
LAUREL MOUNTAIN STATE PARK	SKI LODGE		INTERIOR		WOMENS RESTROOM	4	Existing LED Fixture; No Retrofit	40	0.160	416	4	No Retrofit	40	0.160	416
LAUREL MOUNTAIN STATE PARK	SKI LODGE		INTERIOR		MENS RESTROOM	2	Existing LED Fixture; No Retrofit	10	0.020	52	2	No Retrofit	10	0.020	52
LAUREL MOUNTAIN STATE PARK	SKI LODGE		INTERIOR		MENS RESTROOM	4	Existing LED Fixture; No Retrofit	40	0.160	416	4	No Retrofit	40	0.160	416
LAUREL MOUNTAIN STATE PARK	SKI LODGE		INTERIOR		STAIRS	3	T8 1x4 2-Lamp Wrap Fixture	62	0.186	1,629	3	Retrofit with (2) 12.5 Watt LED T8 4' Lamps; Direct Wire to Socket	25	0.075	657
LAUREL MOUNTAIN STATE PARK	SKI LODGE		INTERIOR		MECHANICAL	1	T8 1x4 4-Lamp Wrap Fixture	106	0.106	106	1	Retrofit with (4) 12.5 Watt LED T8 4' Lamps; Direct Wire to Socket	50	0.050	50
LAUREL MOUNTAIN STATE PARK	SKI LODGE		INTERIOR		LOCKED ROOMS	2	T8 1x4 4-Lamp Wrap Fixture	106	0.212	785	2	Retrofit with (4) 12.5 Watt LED T8 4' Lamps; Direct Wire to Socket	50	0.100	370
LAUREL MOUNTAIN STATE PARK	SKI LODGE		INTERIOR		MECHANICAL	1	T8 1x4 4-Lamp Wrap Fixture	106	0.106	106	1	Retrofit with (4) 12.5 Watt LED T8 4' Lamps; Direct Wire to Socket	50	0.050	50
LAUREL MOUNTAIN STATE PARK	SKI LODGE		INTERIOR		HALLWAY	2	T8 1x4 4-Lamp Wrap Fixture	106	0.212	785	2	Retrofit with (4) 12.5 Watt LED T8 4' Lamps; Direct Wire to Socket	50	0.100	370
LAUREL MOUNTAIN STATE PARK	SKI LODGE		INTERIOR		HALLWAY	2	T8 1x4 2-Lamp Wrap Fixture	62	0.124	459	2	Retrofit with (2) 12.5 Watt LED T8 4' Lamps; Direct Wire to Socket	25	0.050	185
LAUREL MOUNTAIN STATE PARK	SKI LODGE		INTERIOR		KITCHEN STORAGE	2	T8 1x4 4-Lamp Wrap Fixture	106	0.212	212	2	Retrofit with (4) 12.5 Watt LED T8 4' Lamps; Direct Wire to Socket	50	0.100	100
LAUREL MOUNTAIN STATE PARK	SKI LODGE		INTERIOR		COOLER	1	23 Watt Compact Fluorescent Jelly Jar	23	0.023	23	1	Re-Lamp with (1) 10 Watt LED A19	10	0.010	10
LAUREL MOUNTAIN STATE PARK	SKI LODGE		INTERIOR		SKI PATROL LOCKER	2	T8 1x4 4-Lamp Wrap Fixture	106	0.212	785	2	Retrofit with (4) 12.5 Watt LED T8 4' Lamps; Direct Wire to Socket	50	0.100	370
LAUREL MOUNTAIN STATE PARK	SKI LODGE		INTERIOR		OFFICE	2	Existing LED Fixture; No Retrofit	30	0.060	222	2	No Retrofit	30	0.060	222
LAUREL MOUNTAIN STATE PARK	SKI LODGE		EXTERIOR		EXTERIOR-FRONT & SIDE	8	Existing LED Fixture; No Retrofit	10	0.080	350	8	No Retrofit	10	0.080	350
LAUREL MOUNTAIN STATE PARK	SKI LODGE		EXTERIOR		ROOF	2	175 Watt Metal Halide Flood Fixture; Trunion	215	0.430	1,883	2	New 39 Watt LED Flood Fixture; Trunion	78	0.156	683
LAUREL MOUNTAIN STATE PARK	SKI LODGE		EXTERIOR		STAIRS	4	90 Watt Incandescent PAR38 Fixture	90	0.360	1,577	4	Re-Lamp with (1) 17 Watt LED PAR38	17	0.068	298
LAUREL MOUNTAIN STATE PARK	SKI LODGE		EXTERIOR		BACK	2	T12 1x4 2-Lamp Vaporlight Fixture; Damaged	72	0.144	631	2	New 1x4 2-Lamp Vaporlight Fixture with (2) 12.5 Watt LED T8 4' Lamp; Direct Wire to Socket	25	0.050	219
LAUREL MOUNTAIN STATE PARK	SKI LODGE		EXTERIOR		BACK	5	250 Watt Metal Halide Flood Fixture; Trunion	295	1.475	6,461	5	New 125 Watt LED Flood Fixture ; Trunion	134	0.670	2,935
LAUREL MOUNTAIN STATE PARK	SKI LODGE		EXTERIOR		BACK	2	100 Watt Metal Halide Wall Pack Fixture	125	0.250	1,095	2	New 24 Watt LED Wall Pack Fixture; Non-Dark Sky	25	0.050	219
LAUREL MOUNTAIN STATE PARK	SKI LODGE		EXTERIOR		POLES	4	Existing LED Fixture; No Retrofit	100	0.400	1,752	4	No Retrofit	100	0.400	1,752
LAUREL MOUNTAIN STATE PARK	SKI LODGE		EXTERIOR		POLES	2	Existing LED Fixture; No Retrofit	40	0.080	350	2	No Retrofit	40	0.080	350
LAUREL MOUNTAIN STATE PARK	SKI LODGE		EXTERIOR		PARKING LOT	3	1000 Watt Metal Halide 4-Head Sports Light Flood Fixture	4320	12.960	56,765	3	(4) New 350 Watt LED Sports Flood Fixtures	1400	4.200	18,396
LAUREL MOUNTAIN STATE PARK	SKI LODGE		EXTERIOR		PARKING LOT	1	1000 Watt Metal Halide 2-Head Sports Light Flood Fixture	2160	2.160	9,461	1	(2) New 350 Watt LED Sports Flood Fixtures	700	0.700	3,066
LAUREL MOUNTAIN STATE PARK	SKI LODGE		EXTERIOR		PARKING LOT	2	400 Watt Metal Halide Flood Fixture; Trunion	1365	2.730	11,957	2	(3) New 150 Watt LED Flood Fixtures; Trunion	465	0.930	4,073
LAUREL MOUNTAIN STATE PARK	MILK SHED		INTERIOR		STORAGE	2	60 Watt Incandescent A-Lamp Fixture	60	0.120	120	2	Re-Lamp with (1) 10 Watt LED A19	10	0.020	20

©2013 Energy Systems Group, LLC

EXISTING FIXTURES											PROPOSED FIXTURE UPGRADE				
Park/Building Name	Building	Building #	Phase	Floor	Room Description	Qty	Description	Watts	kW	kWh	Qty	Description	Watts	kW	kWh
LAUREL MOUN TAIN STATE PARK	MILK SHED		INTERIOR		STORAGE	1	60 Watt Incandescent A-Lamp Fixture	60	0.060	60	1	Re-Lamp with (1) 10 Watt LED A19	10	0.010	10
LAUREL MOUN TAIN STATE PARK	CHALET-ADMIN BUILDING		EXTERIOR		PARKING LOT	2	100 Watt High Pressure Sodium Shoebox Fixture	125	0.250	1,095	2	New 50 Watt LED Shoebox Fixture	51	0.102	447
LAUREL MOUN TAIN STATE PARK	CHALET-ADMIN BUILDING		EXTERIOR		FRONT	2	60 Watt Incandescent PAR30 Fixture	60	0.120	526	2	Re-Lamp with (1) 10 Watt LED PAR30	10	0.020	88
LAUREL MOUN TAIN STATE PARK	CHALET-ADMIN BUILDING		INTERIOR		FIRE PLACE ROOM	4	60 Watt Incandescent PAR30 Fixture	60	0.240	540	4	Re-Lamp with (1) 10 Watt LED PAR30	10	0.040	90
LAUREL MOUN TAIN STATE PARK	CHALET-ADMIN BUILDING		INTERIOR		FIRE PLACE ROOM	8	120 Watt Incandescent R40 Fixture	120	0.960	2,158	8	Re-Lamp with (1) 17 Watt LED BR40	17	0.136	306
LAUREL MOUN TAIN STATE PARK	CHALET-ADMIN BUILDING		INTERIOR		KITCHEN	8	65 Watt Incandescent R30 Fixture	65	0.520	1,169	8	Re-Lamp with (1) 10 Watt LED BR30	10	0.080	180
LAUREL MOUN TAIN STATE PARK	CHALET-ADMIN BUILDING		INTERIOR		MECHANICAL	2	T12 1x4 2-Lamp Industrial Strip Fixture	72	0.144	144	2	Retrofit with (2) 12.5 Watt LED T8 4' Lamps; Direct Wire to Socket	25	0.050	50
LAUREL MOUN TAIN STATE PARK	CHALET-ADMIN BUILDING		INTERIOR		SHOWER	1	T12 2x4 4-Lamp Surface Mount Fixture	144	0.144	324	1	Retrofit with (4) 12.5 Watt LED T8 4' Lamps; Direct Wire to Socket	50	0.050	112
LAUREL MOUN TAIN STATE PARK	CHALET-ADMIN BUILDING		INTERIOR		RESTROOM	1	T12 2x4 4-Lamp Surface Mount Fixture	144	0.144	375	1	Retrofit with (4) 12.5 Watt LED T8 4' Lamps; Direct Wire to Socket	50	0.050	130
LAUREL MOUN TAIN STATE PARK	CHALET-ADMIN BUILDING		INTERIOR		HALLWAY	2	T12 2x2 2-Lamp U-Lamp Troffer Fixture with 6" Lamps	72	0.144	324	2	Retrofit with (2) 10 Watt LED T8 2' Lamps and (1) 2x2 2-Lamp White Reflector Kit; Direct Wire to Socket	20	0.040	90
LAUREL MOUN TAIN STATE PARK	CHALET-ADMIN BUILDING		INTERIOR		OFFICE	2	T12 2x4 4-Lamp Surface Mount Fixture	144	0.288	647	2	Retrofit with (4) 12.5 Watt LED T8 4' Lamps; Direct Wire to Socket	50	0.100	225
LAUREL MOUN TAIN STATE PARK	CHALET-ADMIN BUILDING		INTERIOR		OFFICE	2	T12 2x4 4-Lamp Surface Mount Fixture	144	0.288	647	2	Retrofit with (4) 12.5 Watt LED T8 4' Lamps; Direct Wire to Socket	50	0.100	225
FORBES FOREST	WARMING HUT		EXTERIOR		EXTERIOR	1	150 Watt Mercury Vapor Dusk to Dawn Fixture	188	0.188	823	1	New 26 Watt LED Dusk to Dawn Barnyard Fixture	26	0.026	114
FORBES FOREST	WARMING HUT		EXTERIOR		EXTERIOR	1	26 Watt Plug-In CFL 2-Lamp Canopy Fixture	58	0.058	254	1	New 10 Watt LED Canopy Fixture	12	0.012	53
FORBES FOREST	WARMING HUT		INTERIOR		WARMING HEATER	3	T12 1x4 4-Lamp Wrap Fixture; Damaged	144	0.432	1,600	3	New 1x8 2-Lamp Wrap Fixture with (4) 12.5 Watt LED T8 4' Lamps; Direct Wire to Socket	50	0.150	556
FORBES FOREST	WARMING HUT		INTERIOR		OFFICE	1	T12 1x4 4-Lamp Wrap Fixture; Damaged	144	0.144	533	1	New 1x8 2-Lamp Wrap Fixture with (4) 12.5 Watt LED T8 4' Lamps; Direct Wire to Socket	50	0.050	185
FORBES FOREST	WARMING HUT		INTERIOR		MEDICAL 1ST AID	3	T12 1x4 4-Lamp Wrap Fixture; Damaged	144	0.432	1,600	3	New 1x8 2-Lamp Wrap Fixture with (4) 12.5 Watt LED T8 4' Lamps; Direct Wire to Socket	50	0.150	556
FORBES FOREST	WARMING HUT		INTERIOR		STORAGE GARAGE	2	T12 1x4 2-Lamp Industrial Strip Fixture	72	0.144	144	2	Retrofit with (2) 12.5 Watt LED T8 4' Lamps; Direct Wire to Socket	25	0.050	50
LAUREL MOUN TAIN STATE PARK	SKI SLOPES		EXTERIOR		SLOPE POLE LIGHTS	176	400 Watt Metal Halide Flood Fixture; Trunion	455	80.080	350,750	176	New 150 Watt LED Flood Fixture; Trunion	155	27.280	119,486
LAUREL MOUN TAIN STATE PARK	MIDWAY CABIN		INTERIOR		STORE	1	T12HO 1x8 2-Lamp Strip Fixture with 110 Watt Lamps	230	0.230	852	1	Retrofit with (4) 12.5 Watt LED T8 4' Lamps and (1) 1x8 4-Lamp Strip Kit; Direct Wire to Socket	50	0.050	185
LAUREL MOUN TAIN STATE PARK	MIDWAY CABIN		INTERIOR		STORE	10	60 Watt Incandescent A-Lamp Fixture	60	0.600	2,222	10	Re-Lamp with (1) 10 Watt LED A19	10	0.100	370
LAUREL MOUN TAIN STATE PARK	MIDWAY CABIN		INTERIOR		STORE	4	120 Watt Incandescent R40 Fixture	120	0.480	1,778	4	Re-Lamp with (1) 17 Watt LED BR40	17	0.068	252
LAUREL MOUN TAIN STATE PARK	MIDWAY CABIN		INTERIOR		STORE	4	T12 1x4 2-Lamp Strip Fixture	72	0.288	1,067	4	Retrofit with (2) 12.5 Watt LED T8 4' Lamps; Direct Wire to Socket	25	0.100	370
LAUREL MOUN TAIN STATE PARK	MIDWAY CABIN		INTERIOR		STORE	1	60 Watt Incandescent 2-Lamp Fixture	120	0.120	444	1	Re-Lamp with (2) 10 Watt LED A19	20	0.020	74
LAUREL MOUN TAIN STATE PARK	MIDWAY CABIN		INTERIOR		STORE	1	Circline Fixture; Damaged	30	0.030	111	1	New 16" Round 22 Watt LED Drum Fixture	22	0.022	81
LAUREL MOUN TAIN STATE PARK	MIDWAY CABIN		INTERIOR		RESTROOM	1	100 Watt Incandescent Drun Fixture; Damaged	100	0.100	260	1	New 12" Round 14 Watt LED Drum Fixture	14	0.014	36

©2013 Energy Systems Group, LLC

EXISTING FIXTURES												PROPOSED FIXTURE UPGRADE				
Park/Building Name	Building	Building #	Phase	Floor	Room Description	Qty	Description	Watts	kW	kWh	Qty	Description	Watts	kW	kWh
LAUREL MOUN TAIN STATE PARK	MIDWAY CABIN		INTERIOR		KITCHEN	1	T12HO 1x8 2-Lamp Strip Fixture with 110 Watt Lamps	230	0.230	852	1	Retrofit with (4) 12.5 Watt LED T8 4' Lamps and (1) 1x8 4-Lamp Strip Kit; Direct Wire to Socket	50	0.050	185
LAUREL MOUN TAIN STATE PARK	MIDWAY CABIN		EXTERIOR		EXTERIOR	1	100 Watt Incandescent A-Lamp Fixture	100	0.100	438	1	Re-Lamp with (1) 18 Watt LED A21	18	0.018	79
LAUREL MOUN TAIN STATE PARK	LOWER PUMP HOUSE		INTERIOR		PUMP ROOM	4	T8 1x4 2-Lamp Vaportight Fixture; Difficult Access	62	0.248	248	4	Retrofit with (2) 12.5 Watt LED T8 4' Lamps; Direct Wire to Socket; Difficult Access	25	0.100	100
LAUREL MOUN TAIN STATE PARK	LOWER PUMP HOUSE		EXTERIOR		EXTERIOR	1	175 Watt Metal Halide Dusk to Dawn Fixture	213	0.213	933	1	New 26 Watt LED Dusk to Dawn Barnyard Fixture	26	0.026	114
LAUREL MOUN TAIN STATE PARK	CHLORINATION BLDG		INTERIOR		MECHANICAL	2	Existing LED Fixture; No Retrofit	10	0.020	20	2	No Retrofit	10	0.020	20
PRESQUE ISLE	BEACH 1 PAVILLION		EXTERIOR		SINK ROOM	4	Existing LED Fixture; No Retrofit	20	0.080	350	4	No Retrofit	20	0.080	350
PRESQUE ISLE	BEACH 1 PAVILLION		EXTERIOR		SINK ROOM	1	Existing LED Fixture; No Retrofit	20	0.020	88	1	No Retrofit	20	0.020	88
PRESQUE ISLE	BEACH 1 REST ROOM		EXTERIOR		PIPE CHASE	2	60 Watt Incandescent A-Lamp Fixture	60	0.120	526	2	Re-Lamp with (1) 10 Watt LED A19	10	0.020	88
PRESQUE ISLE	PARK ENTRANCE		EXTERIOR		POLE LIGHTS	1	Existing LED Fixture; No Retrofit	40	0.040	175	1	No Retrofit	40	0.040	175
PRESQUE ISLE	STULL INTERPRETIVE CENTER		EXTERIOR		LOBBY	3	T12 2x4 2-Lamp Surface Mount Fixture	78	0.234	1,025	3	Retrofit with (2) 12.5 Watt LED T8 4' Lamps; Direct Wire to Socket	25	0.075	329
PRESQUE ISLE	STULL INTERPRETIVE CENTER		EXTERIOR		LOBBY	1	25 Watt Incandescent 2-Lamp Exit Sign	50	0.050	438	1	New 3 watt LED Exit Sign	3	0.003	26
PRESQUE ISLE	STULL INTERPRETIVE CENTER		INTERIOR		CONF CTR ROOM	12	75 Watt Incandescent PAR38	75	0.900	3,334	12	Re-Lamp with (1) 17 Watt LED PAR38	17	0.204	756
PRESQUE ISLE	STULL INTERPRETIVE CENTER		INTERIOR		CLOSET	2	Circline Fixture; No Retrofit	30	0.060	60	2	No Retrofit	30	0.060	60
PRESQUE ISLE	STULL INTERPRETIVE CENTER		INTERIOR		CLOSET	4	75 Watt Incandescent PAR38	75	0.300	300	4	Re-Lamp with (1) 17 Watt LED PAR38	17	0.068	68
PRESQUE ISLE	STULL INTERPRETIVE CENTER		INTERIOR		CONF CTR ROOM	2	25 Watt Incandescent 2-Lamp Exit Sign	50	0.100	876	2	New 3 watt LED Exit Sign	3	0.006	53
PRESQUE ISLE	STULL INTERPRETIVE CENTER		INTERIOR		OFFICE	4	T12 1x4 2-Lamp Wrap Fixture	72	0.288	1,067	4	Retrofit with (2) 12.5 Watt LED T8 4' Lamps; Direct Wire to Socket	25	0.100	370
PRESQUE ISLE	STULL INTERPRETIVE CENTER		INTERIOR		CLOSET	1	Circline Fixture; No Retrofit	30	0.030	30	1	No Retrofit	30	0.030	30
PRESQUE ISLE	STULL INTERPRETIVE CENTER		INTERIOR		MENS RESTROOM	1	60 Watt Incandescent A-Lamp Fixture	60	0.060	156	1	Re-Lamp with (1) 10 Watt LED A19	10	0.010	26
PRESQUE ISLE	STULL INTERPRETIVE CENTER		INTERIOR		MENS RESTROOM	1	52 Watt Incandescent A-Lamp	52	0.052	135	1	Re-Lamp with (1) 10 Watt LED A19	10	0.010	26
PRESQUE ISLE	STULL INTERPRETIVE CENTER		INTERIOR		WOMENS RESTROOM	1	60 Watt Incandescent A-Lamp Fixture	60	0.060	156	1	Re-Lamp with (1) 10 Watt LED A19	10	0.010	26
PRESQUE ISLE	STULL INTERPRETIVE CENTER		INTERIOR		BOOT STORAGE	2	T12 1x4 2-Lamp Wrap Fixture	72	0.144	144	2	Retrofit with (2) 12.5 Watt LED T8 4' Lamps; Direct Wire to Socket	25	0.050	50
PRESQUE ISLE	STULL INTERPRETIVE CENTER		INTERIOR		STORAGE	1	T12 1x4 2-Lamp Wrap Fixture	72	0.072	72	1	Retrofit with (2) 12.5 Watt LED T8 4' Lamps; Direct Wire to Socket	25	0.025	25
PRESQUE ISLE	STULL INTERPRETIVE CENTER		INTERIOR		STORAGE	1	T12 1x4 2-Lamp Wrap Fixture	72	0.072	72	1	Retrofit with (2) 12.5 Watt LED T8 4' Lamps; Direct Wire to Socket	25	0.025	25
PRESQUE ISLE	STULL INTERPRETIVE CENTER		INTERIOR		STORAGE	1	T12 1x4 2-Lamp Wrap Fixture	72	0.072	72	1	Retrofit with (2) 12.5 Watt LED T8 4' Lamps; Direct Wire to Socket	25	0.025	25
PRESQUE ISLE	STULL INTERPRETIVE CENTER		INTERIOR		STORAGE	4	75 Watt Incandescent PAR38	75	0.300	300	4	Re-Lamp with (1) 17 Watt LED PAR38	17	0.068	68
PRESQUE ISLE	STULL INTERPRETIVE CENTER		INTERIOR		STORAGE	1	25 Watt Incandescent 2-Lamp Exit Sign	50	0.050	438	1	New 3 watt LED Exit Sign	3	0.003	26

©2013 Energy Systems Group, LLC

EXISTING FIXTURES												PROPOSED FIXTURE UPGRADE				
Park/Building Name	Building	Building #	Phase	Floor	Room Description	Qty	Description	Watts	kW	kWh	Qty	Description	Watts	kW	kWh
PRESQUE ISLE	STULL INTERPRETIVE CENTER		INTERIOR		BACK TEACHING ROOM	6	65 Watt Incandescent R30 Fixture	65	0.390	1,445	6	Re-Lamp with (1) 10 Watt LED BR30	10	0.060	222
PRESQUE ISLE	STULL INTERPRETIVE CENTER		INTERIOR		STORAGE	1	T12 1x4 2-Lamp Wrap Fixture; Damaged	72	0.072	72	1	New 1x4 2-Lamp Wrap Fixture with (2) 12.5 Watt LED T8 4' Lamp; Direct Wire to Socket	25	0.025	25
PRESQUE ISLE	STULL INTERPRETIVE CENTER		INTERIOR		STORAGE	1	T12 1x4 2-Lamp Wrap Fixture; Damaged	72	0.072	72	1	New 1x4 2-Lamp Wrap Fixture with (2) 12.5 Watt LED T8 4' Lamp; Direct Wire to Socket	25	0.025	25
PRESQUE ISLE	STULL INTERPRETIVE CENTER		INTERIOR		ATTIC	1	T12 1x4 2-Lamp Wrap Fixture	72	0.072	72	1	Retrofit with (2) 12.5 Watt LED T8 4' Lamps; Direct Wire to Socket	25	0.025	25
PRESQUE ISLE	STULL INTERPRETIVE CENTER		INTERIOR		ATTIC	1	T12 1x4 2-Lamp Wrap Fixture; Damaged	72	0.072	72	1	New 1x4 2-Lamp Wrap Fixture with (2) 12.5 Watt LED T8 4' Lamp; Direct Wire to Socket	25	0.025	25
PRESQUE ISLE	STULL INTERPRETIVE CENTER		INTERIOR		MECHANICAL	1	60 Watt Incandescent A-Lamp Fixture	60	0.060	60	1	Re-Lamp with (1) 10 Watt LED A19	10	0.010	10
PRESQUE ISLE	STULL INTERPRETIVE CENTER		INTERIOR		MECHANICAL	1	60 Watt Incandescent A-Lamp Fixture	60	0.060	60	1	Re-Lamp with (1) 10 Watt LED A19	10	0.010	10
PRESQUE ISLE	STULL INTERPRETIVE CENTER		EXTERIOR		FRONT	2	23 Watt Compact Fluorescent 2-Lamp Fixture	46	0.092	403	2	Re-Lamp with (2) 10 Watt LED A19	20	0.040	175
PRESQUE ISLE	STULL INTERPRETIVE CENTER		EXTERIOR		PARKING LOT	1	Existing LED Fixture; No Retrofit	40	0.040	175	1	No Retrofit	40	0.040	175
PRESQUE ISLE	BARRACK BATH HOUSE		EXTERIOR		PIPE CHASE	1	52 Watt Incandescent A-Lamp	52	0.052	228	1	Re-Lamp with (1) 10 Watt LED A19	10	0.010	44
PRESQUE ISLE	RANGER STATION		INTERIOR		LIFE GUARDS	12	T12 1x4 2-Lamp Wrap Fixture	72	0.864	3,200	12	Retrofit with (2) 12.5 Watt LED T8 4' Lamps; Direct Wire to Socket	25	0.300	1,111
PRESQUE ISLE	RANGER STATION		INTERIOR		TREATMENT ROOM	2	T12 1x4 2-Lamp Wrap Fixture	72	0.144	533	2	Retrofit with (2) 12.5 Watt LED T8 4' Lamps; Direct Wire to Socket	25	0.050	185
PRESQUE ISLE	RANGER STATION		INTERIOR		TREATMENT ROOM	2	T12 1x4 2-Lamp Wrap Fixture; Damaged	72	0.144	533	2	New 1x4 2-Lamp Wrap Fixture with (2) 12.5 Watt LED T8 4' Lamp; Direct Wire to Socket	25	0.050	185
PRESQUE ISLE	RANGER STATION		INTERIOR		MANAGER OFFICE	5	T12 1x4 2-Lamp Wrap Fixture	72	0.360	1,333	5	Retrofit with (2) 12.5 Watt LED T8 4' Lamps; Direct Wire to Socket	25	0.125	463
PRESQUE ISLE	RANGER STATION		INTERIOR		CONFERENCE	12	T12 1x4 2-Lamp Wrap Fixture	72	0.864	3,200	12	Retrofit with (2) 12.5 Watt LED T8 4' Lamps; Direct Wire to Socket	25	0.300	1,111
PRESQUE ISLE	RANGER STATION		INTERIOR		LOBBY	2	23 Watt Compact Fluorescent Globe Fixture	23	0.046	170	2	Re-Lamp with (1) 8 Watt LED G25 Globe	8	0.016	59
PRESQUE ISLE	RANGER STATION		INTERIOR		FRONT DESK	9	T8 1x4 2-Lamp Wrap Fixture	62	0.558	2,067	9	Retrofit with (2) 12.5 Watt LED T8 4' Lamps; Direct Wire to Socket	25	0.225	833
PRESQUE ISLE	RANGER STATION		INTERIOR		OFFICE	6	T8 1x4 2-Lamp Wrap Fixture	62	0.372	1,378	6	Retrofit with (2) 12.5 Watt LED T8 4' Lamps; Direct Wire to Socket	25	0.150	556
PRESQUE ISLE	RANGER STATION		INTERIOR		MECHANICAL	2	23 Watt Compact Fluorescent Fixture	23	0.046	46	2	Re-Lamp with (1) 10 Watt LED A19	10	0.020	20
PRESQUE ISLE	RANGER STATION		INTERIOR		LUNCH ROOM	1	T12 1x4 2-Lamp Wrap Fixture	72	0.072	267	1	Retrofit with (2) 12.5 Watt LED T8 4' Lamps; Direct Wire to Socket	25	0.025	93
PRESQUE ISLE	RANGER STATION		INTERIOR		LUNCH ROOM	1	T12 1x4 2-Lamp Wrap Fixture; Damaged	72	0.072	267	1	New 1x4 2-Lamp Wrap Fixture with (2) 12.5 Watt LED T8 4' Lamp; Direct Wire to Socket	25	0.025	93
PRESQUE ISLE	RANGER STATION		INTERIOR		WOMENS RESTROOM	1	13 Watt Compact Fluorescent 2-Lamp Fixture	26	0.026	100	1	Re-Lamp with (2) 10 Watt LED A19	20	0.020	77
PRESQUE ISLE	RANGER STATION		INTERIOR		JANITOR CLOSET	1	100 Watt Incandescent A-Lamp Fixture	100	0.100	100	1	Re-Lamp with (1) 18 Watt LED A21	18	0.018	18
PRESQUE ISLE	RANGER STATION		INTERIOR			1	13 Watt Compact Fluorescent 2-Lamp Fixture	26	0.026	96	1	Re-Lamp with (2) 10 Watt LED A19	20	0.020	74
PRESQUE ISLE	RANGER STATION		INTERIOR			2	1-Lamp F15; No Retrofit	15	0.030	111	2	No Retrofit	15	0.030	111
PRESQUE ISLE	RANGER STATION		INTERIOR		OFFICE / CELL	9	T8 1x4 2-Lamp Wrap Fixture	62	0.558	2,067	9	Retrofit with (2) 12.5 Watt LED T8 4' Lamps; Direct Wire to Socket	25	0.225	833

©2013 Energy Systems Group, LLC

EXISTING FIXTURES											PROPOSED FIXTURE UPGRADE				
Park/Building Name	Building	Building #	Phase	Floor	Room Description	Qty	Description	Watts	kW	kWh	Qty	Description	Watts	kW	kWh
PRESQUE ISLE	RANGER STATION		INTERIOR		EVIDENCE ROOM	1	52 Watt Incandescent A-Lamp	52	0.052	193	1	Re-Lamp with (1) 10 Watt LED A19	10	0.010	37
PRESQUE ISLE	RANGER STATION		INTERIOR		LOCKER ROOM	2	T12 1x4 2-Lamp Wrap Fixture; Damaged	72	0.144	533	2	New 1x4 2-Lamp Wrap Fixture with (2) 12.5 Watt LED T8 4' Lamp; Direct Wire to Socket	25	0.050	185
PRESQUE ISLE	RANGER STATION		INTERIOR		RESTROOM	2	1-Lamp F15; No Retrofit	15	0.030	116	2	No Retrofit	15	0.030	116
PRESQUE ISLE	RANGER STATION		INTERIOR		RESTROOM	1	13 Watt Compact Fluorescent 2-Lamp Fixture	26	0.026	100	1	Re-Lamp with (2) 10 Watt LED A19	20	0.020	77
PRESQUE ISLE	RANGER STATION		INTERIOR		RESTROOM	1	60 Watt Incandescent A-Lamp Jelly Jar Fixture	60	0.060	232	1	Re-Lamp with (1) 10 Watt LED A19	10	0.010	39
PRESQUE ISLE	RANGER STATION		INTERIOR		WOMENS LOCKER	3	T12 1x4 2-Lamp Wrap Fixture; Damaged	72	0.216	800	3	New 1x4 2-Lamp Wrap Fixture with (2) 12.5 Watt LED T8 4' Lamp; Direct Wire to Socket	25	0.075	278
PRESQUE ISLE	RANGER STATION		INTERIOR		GARAGE	1	60 Watt Comapct Fluorescent	60	0.060	222	1	Re-Lamp with (1) 27 Watt LED Omni-Cob Lamp; Hardwire Ballast	27	0.027	100
PRESQUE ISLE	RANGER STATION		INTERIOR		GARAGE	1	23 Watt Compact Fluorescent Fixture	23	0.023	85	1	Re-Lamp with (1) 10 Watt LED A19	10	0.010	37
PRESQUE ISLE	RANGER STATION		INTERIOR		GARAGE	1	100 Watt Incandescent A-Lamp Fixture	100	0.100	370	1	Re-Lamp with (1) 18 Watt LED A21	18	0.018	67
PRESQUE ISLE	RANGER STATION		INTERIOR		STORAGE	1	100 Watt Incandescent A-Lamp Fixture	100	0.100	100	1	Re-Lamp with (1) 18 Watt LED A21	18	0.018	18
PRESQUE ISLE	RANGER STATION		INTERIOR		STORAGE	1	23 Watt Compact Fluorescent Fixture	23	0.023	23	1	Re-Lamp with (1) 10 Watt LED A19	10	0.010	10
PRESQUE ISLE	RANGER STATION		INTERIOR		HALLWAY	7	52 Watt Incandescent 2-Lamp A-Lamp	104	0.728	2,697	7	Re-Lamp with (2) 10 Watt LED A19	20	0.140	519
PRESQUE ISLE	RANGER STATION		INTERIOR		HALLWAY	1	23 Watt Compct Fluorescent Jelly Jar Fixture; Damaged	23	0.023	85	1	New 10 Watt LED A19 Jelly Jar	9	0.009	33
PRESQUE ISLE	RANGER STATION		INTERIOR		VESTIBULE	2	23 Watt Compact Fluorescent Jelly Jar	23	0.046	170	2	Re-Lamp with (1) 10 Watt LED A19	10	0.020	74
PRESQUE ISLE	RANGER STATION		EXTERIOR		EXTERIOR FRONT	2	23 Watt Compact Fluroescent Globe Fixture	23	0.046	201	2	Re-Lamp with (1) 10 Watt LED A19	10	0.020	88
PRESQUE ISLE	RANGER STATION		EXTERIOR		EXTERIOR FRONT	1	300 Watt Quartz Flood Fixture	300	0.300	1,314	1	New 52 Watt LED Flood Fixture	54	0.054	237
PRESQUE ISLE	RANGER STATION		EXTERIOR		REAR	2	100 Watt Metal Halide Wall Pack Fixture	125	0.250	1,095	2	New 24 Watt LED Wall Pack Fixture; Non-Dark Sky	25	0.050	219
PRESQUE ISLE	RANGER STATION		EXTERIOR		PARKING LOT	2	175 Watt Mercury Vapor Dusk to Dawn Fixture	210	0.420	1,840	2	New 26 Watt LED Dusk to Dawn Barnyard Fixture	26	0.052	228
PRESQUE ISLE	RANGER STATION		INTERIOR		MENS RESTROOM	1	T12 1x8 2-Lamp Vaportight Fixture with 60 Watt Lamps	123	0.123	475	1	New 1x8 2-Lamp Vaportight Fixture with (4) 12.5 Watt LED T8 4' Lamps; Direct Wire to Socket	50	0.050	193
PRESQUE ISLE	RANGER STATION		INTERIOR		MENS RESTROOM	1	60 Watt Incandescent 2-Lamp Fixture	120	0.120	464	1	Re-Lamp with (2) 10 Watt LED A19	20	0.020	77
PRESQUE ISLE	RANGER STATION		INTERIOR		WOMENS RESTROOM	1	60 Watt Incandescent 2-Lamp Fixture	120	0.120	464	1	Re-Lamp with (2) 10 Watt LED A19	20	0.020	77
PRESQUE ISLE	RANGER STATION		INTERIOR		WOMENS RESTROOM	1	T12 1x8 2-Lamp Vaportight Fixture with 60 Watt Lamps	123	0.123	475	1	New 1x8 2-Lamp Vaportight Fixture with (4) 12.5 Watt LED T8 4' Lamps; Direct Wire to Socket	50	0.050	193
PRESQUE ISLE	RANGER STATION		EXTERIOR		EXTERIOR LEFT	1	175 Watt Mercury Vapor Dusk to Dawn Fixture	210	0.210	920	1	New 26 Watt LED Dusk to Dawn Barnyard Fixture	26	0.026	114
PRESQUE ISLE	RANGER STATION		EXTERIOR		EXTERIOR BACK	3	100 Watt Metal Halide Wall Pack Fixture	125	0.375	1,643	3	New 24 Watt LED Wall Pack Fixture; Non-Dark Sky	25	0.075	329
PRESQUE ISLE	RANGER STATION		EXTERIOR		EXTERIOR BACK	1	23 Watt Compact Fluroescent Globe Fixture	23	0.023	101	1	Re-Lamp with (1) 10 Watt LED A19	10	0.010	44
PRESQUE ISLE	NIAGRA COMFORT STATION		INTERIOR		MENS RESTROOM	1	23 Watt Compact Fluorescent Fixture	23	0.023	89	1	Re-Lamp with (1) 10 Watt LED A19	10	0.010	39

©2013 Energy Systems Group, LLC

EXISTING FIXTURES											PROPOSED FIXTURE UPGRADE				
Park/Building Name	Building	Building #	Phase	Floor	Room Description	Qty	Description	Watts	kW	kWh	Qty	Description	Watts	kW	kWh
PRESQUE ISLE	NIAGRA COMFORT STATION		INTERIOR		MENS RESTROOM	1	T12 1x4 2-Lamp Wrap Fixture	72	0.072	278	1	Retrofit with (2) 12.5 Watt LED T8 4' Lamps; Direct Wire to Socket	25	0.025	97
PRESQUE ISLE	NIAGRA COMFORT STATION		INTERIOR		WOMENS RESTROOM	1	23 Watt Compact Fluorescent Fixture	23	0.023	89	1	Re-Lamp with (1) 10 Watt LED A19	10	0.010	39
PRESQUE ISLE	NIAGRA COMFORT STATION		INTERIOR		WOMENS RESTROOM	1	T12 1x4 2-Lamp Wrap Fixture	72	0.072	278	1	Retrofit with (2) 12.5 Watt LED T8 4' Lamps; Direct Wire to Socket	25	0.025	97
PRESQUE ISLE	NIAGRA COMFORT STATION		INTERIOR		PIPE CHASE	2	60 Watt Incandescent A-Lamp Fixture	60	0.120	120	2	Re-Lamp with (1) 10 Watt LED A19	10	0.020	20
PRESQUE ISLE	NIAGRA COMFORT STATION		EXTERIOR		EXTERIOR	2	23 Watt Compact Fluorescent Fixture	23	0.046	201	2	Re-Lamp with (1) 10 Watt LED A19	10	0.020	88
PRESQUE ISLE	NIAGRA COMFORT STATION		EXTERIOR		PARKING LOT	1	Existing LED Fixture; No Retrofit	20	0.020	88	1	No Retrofit	20	0.020	88
PRESQUE ISLE	COOKHOUSE PAVILLION		INTERIOR		PAVILLION	6	23 Watt Compact Fluorescent Fixture	23	0.138	511	6	Re-Lamp with (1) 10 Watt LED A19	10	0.060	222
PRESQUE ISLE	COOKHOUSE PAVILLION		INTERIOR		SINK RM	2	23 Watt Compact Fluorescent Fixture	23	0.046	170	2	Re-Lamp with (1) 10 Watt LED A19	10	0.020	74
PRESQUE ISLE	COOKHOUSE COMFORT STATION		INTERIOR		PIPE CHASE	2	23 Watt Compact Fluorescent Jelly Jar	23	0.046	46	2	Re-Lamp with (1) 10 Watt LED A19	10	0.020	20
PRESQUE ISLE	WATER WORKS - YELLOW BIKE		INTERIOR		STORAGE	2	13 Watt Compact Fluorescent Fixture	13	0.026	26	2	Re-Lamp with (1) 10 Watt LED A19	10	0.020	20
PRESQUE ISLE	WATER WORKS - YELLOW BIKE		INTERIOR		YELLOW BIKE	3	T12HO 1x8 2-Lamp Strip Fixture with 110 Watt Lamps	230	0.690	1,904	3	Retrofit with (4) 12.5 Watt LED T8 4' Lamps and (1) 1x8 4-Lamp Strip Kit; Direct Wire to Socket	50	0.150	414
PRESQUE ISLE	WATER WORKS - YELLOW BIKE		INTERIOR		BENCH	1	T12 1x4 2-Lamp Industrial Strip Fixture	72	0.072	199	1	Retrofit with (2) 12.5 Watt LED T8 4' Lamps; Direct Wire to Socket	25	0.025	69
PRESQUE ISLE	WATER WORKS - YELLOW BIKE		INTERIOR		BENCH	2	60 Watt A-Lamp; Par Holder	60	0.120	331	2	Re-Lamp with (1) 10 Watt LED PAR30	10	0.020	55
PRESQUE ISLE	WATER WORKS - YELLOW BIKE		INTERIOR		BENCH	1	150 Watt Quartz Flood Fixture	150	0.150	414	1	New 26 Watt LED Flood Fixture	27	0.027	75
PRESQUE ISLE	WATER WORKS - YELLOW BIKE		EXTERIOR		EXTERIOR	1	400 Watt High Pressure Sodium Flood Fixture; Trunion	455	0.455	1,993	1	New 150 Watt LED Flood Fixture ; Trunion	155	0.155	679
PRESQUE ISLE	WATER WORKS - YELLOW BIKE		INTERIOR		EXTERIOR	1	100 Watt Metal Halide Wall Pack Fixture	125	0.125	345	1	New 24 Watt LED Wall Pack Fixture; Non-Dark Sky	25	0.025	69
PRESQUE ISLE	WATER WORKS - YELLOW BIKE		INTERIOR		GARAGE-PUMP HOUSE	1	No Access; Area(s) Not included in Scope/Pricing	0	0.000	0	1	No Retrofit	0	0.000	0
PRESQUE ISLE	WEST PIER DOCKS		EXTERIOR		PARKING LOT	1	400 Watt Metal Halide Flood Fixture; Trunion	455	0.455	1,993	1	New 150 Watt LED Flood Fixture ; Trunion	155	0.155	679
PRESQUE ISLE	WEST PIER COMFORT STATION		EXTERIOR		PIPE CHASE	1	No Lights; Area(s) Not Included in Scope/Pricing	0	0.000	0	1	No Retrofit	0	0.000	0
PRESQUE ISLE	MARINA COMFORT STATION		INTERIOR		MENS RESTROOM	2	T8 1x4 2-Lamp Vaporlight Fixture	62	0.124	479	2	Retrofit with (2) 12.5 Watt LED T8 4' Lamps; Direct Wire to Socket	25	0.050	193
PRESQUE ISLE	MARINA COMFORT STATION		INTERIOR		MENS RESTROOM	2	T12 1x4 2-Lamp Vaporlight Fixture; Damaged	72	0.144	556	2	New 1x4 2-Lamp Vaporlight Fixture with (2) 12.5 Watt LED T8 4' Lamp; Direct Wire to Socket	25	0.050	193
PRESQUE ISLE	MARINA COMFORT STATION		INTERIOR		MENS RESTROOM	1	T8 1x4 2-Lamp Vaporlight Fixture; Difficult Access	62	0.062	240	1	Retrofit with (2) 12.5 Watt LED T8 4' Lamps; Direct Wire to Socket; Difficult Access	25	0.025	97
PRESQUE ISLE	MARINA COMFORT STATION		INTERIOR		MENS RESTROOM	1	25 Watt Incandescent 2-Lamp Exit Sign	50	0.050	193	1	New 3 watt LED Exit Sign	3	0.003	12
PRESQUE ISLE	MARINA COMFORT STATION		INTERIOR		MENS RESTROOM	1	13 Watt Plug-In CFL 2-Lamp Fixture	28	0.028	108	1	No Retrofit	28	0.028	108
PRESQUE ISLE	MARINA COMFORT STATION		INTERIOR		WOMENS RESTROOM	4	T12 1x4 2-Lamp Vaporlight Fixture	72	0.288	1,113	4	Retrofit with (2) 12.5 Watt LED T8 4' Lamps; Direct Wire to Socket	25	0.100	386
PRESQUE ISLE	MARINA COMFORT STATION		INTERIOR		WOMENS RESTROOM	1	T12 1x4 2-Lamp Vaporlight Fixture	72	0.072	278	1	Retrofit with (2) 12.5 Watt LED T8 4' Lamps; Direct Wire to Socket	25	0.025	97

©2013 Energy Systems Group, LLC

EXISTING FIXTURES											PROPOSED FIXTURE UPGRADE				
Park/Building Name	Building	Building #	Phase	Floor	Room Description	Qty	Description	Watts	kW	kWh	Qty	Description	Watts	kW	kWh
PRESQUE ISLE	MARINA COMFORT STATION		INTERIOR		WOMENS RESTROOM	1	13 Watt Plug-In CFL 2-Lamp Fixture	28	0.028	108	1	No Retrofit	28	0.028	108
PRESQUE ISLE	MARINA COMFORT STATION		EXTERIOR		EXTERIOR	7	60 Watt Incandescent 2-Lamp Canopy	120	0.840	3,679	7	New 10 Watt LED Canopy Fixture	10	0.070	307
PRESQUE ISLE	MARINA COMFORT STATION		EXTERIOR		DOCK LIGHTS	123	13 Watt Plug-In CFL Fixture	14	1.722	7,542	123	No Retrofit	14	1.722	7,542
PRESQUE ISLE	MARINA COMFORT STATION		EXTERIOR		PARKING LOT	15	400 Watt Metal Halide Shoebox Fixture	455	6.825	29,894	15	New 150 Watt LED Shoebox Fixture	155	2.325	10,184
PRESQUE ISLE	MARINA COMFORT STATION		EXTERIOR		PARKING LOT	2	400 Watt Metal Halide Shoebox Fixture	455	0.910	3,986	2	New 150 Watt LED Shoebox Fixture	155	0.310	1,358
PRESQUE ISLE	MARINA COMFORT STATION		EXTERIOR		PARKING LOT	5	400 Watt Metal Halide 2-Head Shoebox Fixture	910	4.550	19,929	5	(2) New 150 Watt LED Shoebox Fixtures	310	1.550	6,789
PRESQUE ISLE	MARINA OFFICE		INTERIOR		GARAGE	6	T8 1x8 4-Lamp Industrial Strip Fixture; Turret	106	0.636	1,430	6	New 1x8 2-Lamp Industrial Fixture with (4) 12.5 Watt LED T8 4' Lamps; Direct Wire to Socket	50	0.300	674
PRESQUE ISLE	MARINA OFFICE		INTERIOR		GARAGE	1	3 Watt LED 2-Lamp Exit Sign	3	0.003	26	1	No Retrofit	3	0.003	26
PRESQUE ISLE	MARINA OFFICE		INTERIOR		CONFERENCE	16	T8 1x4 2-Lamp Direct/Indirect Linear Fixture	62	0.992	2,230	16	Retrofit with (2) 12.5 Watt LED T8 4' Lamps; Direct Wire to Socket	25	0.400	899
PRESQUE ISLE	MARINA OFFICE		INTERIOR		KITCHEN	2	T8 2x4 3-Lamp Surface Mount Fixture	84	0.168	378	2	Retrofit with (3) 12.5 Watt LED T8 4' Lamps; Direct Wire to Socket	37.5	0.075	169
PRESQUE ISLE	MARINA OFFICE		INTERIOR		OFFICE	6	T8 2x4 2-Lamp Surface Mount Fixture	62	0.372	836	6	Retrofit with (2) 12.5 Watt LED T8 4' Lamps; Direct Wire to Socket	25	0.150	337
PRESQUE ISLE	MARINA OFFICE		INTERIOR		LOBBY	2	T8 2x4 3-Lamp Surface Mount Fixture	84	0.168	378	2	Retrofit with (3) 12.5 Watt LED T8 4' Lamps; Direct Wire to Socket	37.5	0.075	169
PRESQUE ISLE	MARINA OFFICE		INTERIOR		LOBBY	1	3 Watt LED 2-Lamp Exit Sign	3	0.003	26	1	No Retrofit	3	0.003	26
PRESQUE ISLE	MARINA OFFICE		INTERIOR		AQUA LAB	18	T8 2x4 2-Lamp Surface Mount Fixture	62	1.116	2,509	18	Retrofit with (2) 12.5 Watt LED T8 4' Lamps; Direct Wire to Socket	25	0.450	1,012
PRESQUE ISLE	MARINA OFFICE		INTERIOR		AQUA LAB	2	3 Watt LED 2-Lamp Exit Sign	3	0.006	53	2	No Retrofit	3	0.006	53
PRESQUE ISLE	MARINA OFFICE		INTERIOR		RESTROOM	1	T8 2x4 3-Lamp Surface Mount Fixture	84	0.084	324	1	Retrofit with (3) 12.5 Watt LED T8 4' Lamps; Direct Wire to Socket	37.5	0.038	145
PRESQUE ISLE	MARINA OFFICE		INTERIOR		RESTROOM	1	T8 2x2 1-Lamp Vanity Fixture	22	0.022	85	1	Retrofit with (1) 10 Watt LED T8 2' Lamp; Direct Wire to Socket	10	0.010	39
PRESQUE ISLE	MARINA OFFICE		INTERIOR		MECHANICAL	1	T8 1x4 2-Lamp Strip Fixture	62	0.062	62	1	Retrofit with (2) 12.5 Watt LED T8 4' Lamps; Direct Wire to Socket	25	0.025	25
PRESQUE ISLE	MARINA OFFICE		INTERIOR		MECHANICAL	1	T12 1x4 2-Lamp Strip Fixture	72	0.072	72	1	Retrofit with (2) 12.5 Watt LED T8 4' Lamps; Direct Wire to Socket	25	0.025	25
PRESQUE ISLE	MARINA OFFICE		INTERIOR		RESTROOM	1	T8 2x4 3-Lamp Surface Mount Fixture	84	0.084	324	1	Retrofit with (3) 12.5 Watt LED T8 4' Lamps; Direct Wire to Socket	37.5	0.038	145
PRESQUE ISLE	MARINA OFFICE		INTERIOR		RESTROOM	1	T8 2x2 1-Lamp Vanity Fixture	22	0.022	85	1	Retrofit with (1) 10 Watt LED T8 2' Lamp; Direct Wire to Socket	10	0.010	39
PRESQUE ISLE	MARINA OFFICE		INTERIOR		STORAGE/ELEC	3	T8 1x4 4-Lamp Industrial Strip Fixture; Turret	106	0.318	318	3	New 1x8 2-Lamp Industrial Fixture with (4) 12.5 Watt LED T8 4' Lamps; Direct Wire to Socket	50	0.150	150
PRESQUE ISLE	MARINA OFFICE		EXTERIOR		EXTERIOR	2	42 Watt Plug-In CFL 2-Lamp Wall Pack Fixture	90	0.180	788	2	New 24 Watt LED Wall Pack Fixture; Non-Dark Sky	25	0.050	219
PRESQUE ISLE	MARINA FUEL DECK BUILDING		INTERIOR		OFFICE	4	13 Watt Compact Fluorescent Jelly Jar Fixture; Damaged	13	0.052	144	4	New 10 Watt LED A19 Jelly Jar	9	0.036	99
PRESQUE ISLE	MARINA FUEL DECK BUILDING		INTERIOR		OFFICE	1	T12 1x4 2-Lamp Strip Fixture	72	0.072	199	1	Retrofit with (2) 12.5 Watt LED T8 4' Lamps; Direct Wire to Socket	25	0.025	69
PRESQUE ISLE	MARINA FUEL DECK BUILDING		INTERIOR		CLOSET	1	T12HO 1x8 2-Lamp Strip Fixture with 95 Watt Lamps	207	0.207	207	1	Retrofit with (4) 12.5 Watt LED T8 4' Lamps and (1) 44 Lamp Strip Kit; Direct Wire to Socket	50	0.050	50

©2013 Energy Systems Group, LLC

EXISTING FIXTURES												PROPOSED FIXTURE UPGRADE				
Park/Building Name	Building	Building #	Phase	Floor	Room Description	Qty	Description	Watts	kW	kWh	Qty	Description	Watts	kW	kWh
PRESQUE ISLE	MARINA FUEL DECK BUILDING		EXTERIOR		EXTERIOR	2	13 Watt Compact Fluorescent Fixture	13	0.026	114	2	Re-Lamp with (1) 10 Watt LED A19	10	0.020	88
PRESQUE ISLE	MARINA FUEL DECK BUILDING		EXTERIOR		EXTERIOR	7	150 Watt Metal Halide Post Top Fixture	188	1.316	5,764	7	New 52 Watt LED Spider Mount Post Top Fixture	59	0.413	1,809
PRESQUE ISLE	MARINA CENTRAL COMFORT STATION		INTERIOR		CART STORAGE	2	T8 1x4 2-Lamp Wrap Fixture	62	0.124	124	2	Retrofit with (2) 12.5 Watt LED T8 4' Lamps; Direct Wire to Socket	25	0.050	50
PRESQUE ISLE	MARINA CENTRAL COMFORT STATION		INTERIOR		TOILET/SHOWER	1	T8 1x4 2-Lamp Vanity Fixture	62	0.062	171	1	Retrofit with (2) 12.5 Watt LED T8 4' Lamps; Direct Wire to Socket	25	0.025	69
PRESQUE ISLE	MARINA CENTRAL COMFORT STATION		INTERIOR		TOILET/SHOWER	2	42 Watt Plug-In CFL 2-Lamp 10" Downlight Fixture	90	0.180	497	2	No Retrofit	90	0.180	497
PRESQUE ISLE	MARINA CENTRAL COMFORT STATION		INTERIOR		TOILET/SHOWER	1	T8 1x4 2-Lamp Vanity Fixture	62	0.062	171	1	Retrofit with (2) 12.5 Watt LED T8 4' Lamps; Direct Wire to Socket	25	0.025	69
PRESQUE ISLE	MARINA CENTRAL COMFORT STATION		INTERIOR		TOILET/SHOWER	2	42 Watt Plug-In CFL 2-Lamp 10" Downlight Fixture	90	0.180	497	2	No Retrofit	90	0.180	497
PRESQUE ISLE	MARINA CENTRAL COMFORT STATION		INTERIOR		TOILET/SHOWER	1	T8 1x4 2-Lamp Vanity Fixture	62	0.062	171	1	Retrofit with (2) 12.5 Watt LED T8 4' Lamps; Direct Wire to Socket	25	0.025	69
PRESQUE ISLE	MARINA CENTRAL COMFORT STATION		INTERIOR		TOILET/SHOWER	2	42 Watt Plug-In CFL 2-Lamp 10" Downlight Fixture	90	0.180	497	2	No Retrofit	90	0.180	497
PRESQUE ISLE	MARINA CENTRAL COMFORT STATION		INTERIOR		LAUNDRY/MECH	4	T8 1x4 2-Lamp Wrap Fixture	62	0.248	248	4	Retrofit with (2) 12.5 Watt LED T8 4' Lamps; Direct Wire to Socket	25	0.100	100
PRESQUE ISLE	MARINA CENTRAL COMFORT STATION		INTERIOR		LAUNDRY/MECH	2	T8 1x4 2-Lamp Strip Fixture	62	0.124	124	2	Retrofit with (2) 12.5 Watt LED T8 4' Lamps; Direct Wire to Socket	25	0.050	50
PRESQUE ISLE	MARINA CENTRAL COMFORT STATION		INTERIOR		LAUNDRY/MECH	4	13 Watt Compact Fluorescent Fixture	13	0.052	52	4	Re-Lamp with (1) 10 Watt LED A19	10	0.040	40
PRESQUE ISLE	MARINA CENTRAL COMFORT STATION		INTERIOR		TOILET/SHOWER	1	T8 1x4 2-Lamp Vanity Fixture	62	0.062	171	1	Retrofit with (2) 12.5 Watt LED T8 4' Lamps; Direct Wire to Socket	25	0.025	69
PRESQUE ISLE	MARINA CENTRAL COMFORT STATION		INTERIOR		TOILET/SHOWER	2	42 Watt Plug-In CFL 2-Lamp 10" Downlight Fixture	90	0.180	497	2	No Retrofit	90	0.180	497
PRESQUE ISLE	MARINA CENTRAL COMFORT STATION		INTERIOR		TOILET/SHOWER	1	T8 1x4 2-Lamp Vanity Fixture	62	0.062	171	1	Retrofit with (2) 12.5 Watt LED T8 4' Lamps; Direct Wire to Socket	25	0.025	69
PRESQUE ISLE	MARINA CENTRAL COMFORT STATION		INTERIOR		TOILET/SHOWER	2	42 Watt Plug-In CFL 2-Lamp 10" Downlight Fixture	90	0.180	497	2	No Retrofit	90	0.180	497
PRESQUE ISLE	MARINA CENTRAL COMFORT STATION		INTERIOR		TOILET/SHOWER	1	T8 1x4 2-Lamp Vanity Fixture	62	0.062	171	1	Retrofit with (2) 12.5 Watt LED T8 4' Lamps; Direct Wire to Socket	25	0.025	69
PRESQUE ISLE	MARINA CENTRAL COMFORT STATION		INTERIOR		TOILET/SHOWER	2	42 Watt Plug-In CFL 2-Lamp 10" Downlight Fixture	90	0.180	497	2	No Retrofit	90	0.180	497
PRESQUE ISLE	MARINA CENTRAL COMFORT STATION		INTERIOR		TOILET/SHOWER	2	42 Watt Plug-In CFL 2-Lamp 10" Downlight Fixture	90	0.180	497	2	No Retrofit	90	0.180	497
PRESQUE ISLE	MARINA CENTRAL COMFORT STATION		EXTERIOR		EXTERIOR	6	42 Watt Plug-In CFL 2-Lamp Wall Pack Fixture	90	0.540	2,365	6	New 24 Watt LED Wall Pack Fixture; Non-Dark Sky	25	0.150	657
PRESQUE ISLE	MARINA CENTRAL COMFORT STATION		EXTERIOR		EXTERIOR	2	42 Watt Plug-In CFL 2-Lamp Canopy Fixture	45	0.090	394	2	New 10 Watt LED Canopy Fixture	12	0.024	105
PRESQUE ISLE	MARINA NORTH COMFORT STATION		INTERIOR		MENS RESTROOM	4	T8 1x4 2-Lamp Vaportight Fixture	62	0.248	958	4	Retrofit with (2) 12.5 Watt LED T8 4' Lamps; Direct Wire to Socket	25	0.100	386
PRESQUE ISLE	MARINA NORTH COMFORT STATION		INTERIOR		MENS RESTROOM	1	T8 1x4 2-Lamp Vaportight Fixture; Difficult Access	62	0.062	240	1	Retrofit with (2) 12.5 Watt LED T8 4' Lamps; Direct Wire to Socket; Difficult Access	25	0.025	97
PRESQUE ISLE	MARINA NORTH COMFORT STATION		INTERIOR		CLOSET	1	13 Watt Plug-In CFL 2-Lamp Fixture	28	0.028	28	1	No Retrofit	28	0.028	28
PRESQUE ISLE	MARINA NORTH COMFORT STATION		INTERIOR		WOMENS RESTROOM	4	T8 1x4 2-Lamp Vaportight Fixture	62	0.248	958	4	Retrofit with (2) 12.5 Watt LED T8 4' Lamps; Direct Wire to Socket	25	0.100	386
PRESQUE ISLE	MARINA NORTH COMFORT STATION		INTERIOR		WOMENS RESTROOM	1	T12 1x4 2-Lamp Vaportight Fixture	72	0.072	278	1	Retrofit with (2) 12.5 Watt LED T8 4' Lamps; Direct Wire to Socket	25	0.025	97
PRESQUE ISLE	MARINA NORTH COMFORT STATION		INTERIOR		CLOSET	1	13 Watt Plug-In CFL 2-Lamp Fixture	28	0.028	28	1	No Retrofit	28	0.028	28

©2013 Energy Systems Group, LLC

EXISTING FIXTURES												PROPOSED FIXTURE UPGRADE				
Park/Building Name	Building	Building #	Phase	Floor	Room Description	Qty	Description	Watts	kW	kWh	Qty	Description	Watts	kW	kWh
PRESQUE ISLE	MARINA NORTH COMFORT STATION		EXTERIOR		EXTERIOR	6	23 Watt Compact Fluorescent 2-Lamp Fixture	46	0.276	1,209	6	Re-Lamp with (2) 10 Watt LED A19	20	0.120	526
PRESQUE ISLE	NEW BUILDING-RESIDENCE	2514 NORTH TRACY	INTERIOR		VESTIBULE	1	13 Watt Compact Fluorescent Fixture	13	0.013	48	1	Re-Lamp with (1) 10 Watt LED A19	10	0.010	37
PRESQUE ISLE	NEW BUILDING-RESIDENCE	2514 NORTH TRACY	INTERIOR		DINING ROOM	1	60 Watt Incandescent 3-Lamp Fixture	180	0.180	667	1	Re-Lamp with (3) 10 Watt LED A19	30	0.030	111
PRESQUE ISLE	NEW BUILDING-RESIDENCE	2514 NORTH TRACY	INTERIOR		KITCHEN	1	Circline Fixture; No Retrofit	30	0.030	111	1	No Retrofit	30	0.030	111
PRESQUE ISLE	NEW BUILDING-RESIDENCE	2514 NORTH TRACY	INTERIOR		TV ROOM	1	25 Watt Incandescent A-Lamp	25	0.025	93	1	Re-Lamp with (1) 7 Watt LED A19	7	0.007	26
PRESQUE ISLE	NEW BUILDING-RESIDENCE	2514 NORTH TRACY	INTERIOR		GARAGE	1	60 Watt Incandescent A-Lamp Fixture	60	0.060	222	1	Re-Lamp with (1) 10 Watt LED A19	10	0.010	37
PRESQUE ISLE	NEW BUILDING-RESIDENCE	2514 NORTH TRACY	INTERIOR		RESTROOM	1	60 Watt Incandescent Globe Fixture	60	0.060	222	1	Re-Lamp with (1) 8 Watt LED G25 Globe	8	0.008	30
PRESQUE ISLE	NEW BUILDING-RESIDENCE	2514 NORTH TRACY	INTERIOR		CLOSET	1	60 Watt Incandescent A-Lamp Fixture	60	0.060	60	1	Re-Lamp with (1) 10 Watt LED A19	10	0.010	10
PRESQUE ISLE	NEW BUILDING-RESIDENCE	2514 NORTH TRACY	INTERIOR		BASEMENT	1	40 Watt Incandescent Candelabra Fixture	40	0.040	148	1	Re-Lamp with (1) 5 Watt LED Candelabra	5	0.005	19
PRESQUE ISLE	NEW BUILDING-RESIDENCE	2514 NORTH TRACY	INTERIOR		BASEMENT	4	60 Watt Incandescent A-Lamp Fixture	60	0.240	889	4	Re-Lamp with (1) 10 Watt LED A19	10	0.040	148
PRESQUE ISLE	NEW BUILDING-RESIDENCE	2514 NORTH TRACY	INTERIOR		BASEMENT	1	13 Watt Compact Fluorescent Fixture	13	0.013	48	1	Re-Lamp with (1) 10 Watt LED A19	10	0.010	37
PRESQUE ISLE	NEW BUILDING-RESIDENCE	2514 NORTH TRACY	INTERIOR		CLOSET	1	60 Watt Incandescent A-Lamp Fixture	60	0.060	60	1	Re-Lamp with (1) 10 Watt LED A19	10	0.010	10
PRESQUE ISLE	NEW BUILDING-RESIDENCE	2514 NORTH TRACY	INTERIOR		UPSTAIRS HALL	1	13 Watt Compact Fluorescent Fixture	13	0.013	114	1	Re-Lamp with (1) 10 Watt LED A19	10	0.010	88
PRESQUE ISLE	NEW BUILDING-RESIDENCE	2514 NORTH TRACY	INTERIOR		RESTROOM	1	25 Watt Incandescent 3-Lamp Candelabra	75	0.075	278	1	Re-Lamp with (3) 5 Watt LED Candelabra	15	0.015	56
PRESQUE ISLE	NEW BUILDING-RESIDENCE	2514 NORTH TRACY	INTERIOR		RESTROOM	1	25 Watt Incandescent 2-Lamp Candelabra	50	0.050	185	1	Re-Lamp with (1) 5 Watt LED Candelabra	5	0.005	19
PRESQUE ISLE	NEW BUILDING-RESIDENCE	2514 NORTH TRACY	INTERIOR		BED	1	40 Watt Incandescent 3-Lamp Candelabra Fixture	120	0.120	444	1	Re-Lamp with (3) 5 Watt LED Candelabra	15	0.015	56
PRESQUE ISLE	NEW BUILDING-RESIDENCE	2514 NORTH TRACY	INTERIOR		CLOSET	1	60 Watt Incandescent A-Lamp Fixture	60	0.060	60	1	Re-Lamp with (1) 10 Watt LED A19	10	0.010	10
PRESQUE ISLE	NEW BUILDING-RESIDENCE	2514 NORTH TRACY	INTERIOR		BED	1	40 Watt Incandescent 3-Lamp Candelabra Fixture	120	0.120	444	1	Re-Lamp with (3) 5 Watt LED Candelabra	15	0.015	56
PRESQUE ISLE	NEW BUILDING-RESIDENCE	2514 NORTH TRACY	INTERIOR		MASTER	1	65 Watt Incandescent 3-Lamp Fixture	185	0.185	685	1	Relamp with (3) 10 Watt LED A19	30	0.030	111
PRESQUE ISLE	NEW BUILDING-RESIDENCE	2514 NORTH TRACY	INTERIOR		MASTER	1	60 Watt Incandescent A-Lamp Fixture	60	0.060	222	1	Re-Lamp with (1) 10 Watt LED A19	10	0.010	37
PRESQUE ISLE	NEW BUILDING-RESIDENCE	2514 NORTH TRACY	EXTERIOR		EXTERIOR	2	60 Watt Incandescent A-Lamp Fixture	60	0.120	526	2	Re-Lamp with (1) 10 Watt LED A19	10	0.020	88
PRESQUE ISLE	NEW BUILDING-RESIDENCE	2514 NORTH TRACY	EXTERIOR		EXTERIOR	1	60 Watt Incandescent 3-Lamp Candelabra	180	0.180	788	1	Re-Lamp with (3) 10 Watt LED A19	30	0.030	131
PRESQUE ISLE	NEW BUILDING-RESIDENCE	2514 NORTH TRACY	EXTERIOR		EXTERIOR	1	60 Watt Incandescent A-Lamp Fixture	60	0.060	263	1	Re-Lamp with (1) 10 Watt LED A19	10	0.010	44
PRESQUE ISLE	NEW BUILDING-RESIDENCE	8075 W. LAKE ROAD	EXTERIOR		EXTERIOR	4	13 Watt Compact Fluorescent Fixture	13	0.052	228	4	Re-Lamp with (1) 10 Watt LED A19	10	0.040	175
PRESQUE ISLE	NEW BUILDING-RESIDENCE	8075 W. LAKE ROAD	INTERIOR		VESTIBULE	2	40 Watt Incandescent Candelabra Fixture	40	0.080	296	2	Re-Lamp with (1) 5 Watt LED Candelabra	5	0.010	37
PRESQUE ISLE	NEW BUILDING-RESIDENCE	8075 W. LAKE ROAD	INTERIOR		DINING ROOM	1	60 Watt Incandescent 6-Lamp Candelabra	240	0.240	889	1	Relamp with (6) 5 Watt LED Candelabra Lamps	30	0.030	111

©2013 Energy Systems Group, LLC

EXISTING FIXTURES												PROPOSED FIXTURE UPGRADE				
Park/Building Name	Building	Building #	Phase	Floor	Room Description	Qty	Description	Watts	kW	kWh	Qty	Description	Watts	kW	kWh
PRESQUE ISLE	NEW BUILDING-RESIDENCE	8075 W. LAKE ROAD	INTERIOR		KITCHEN	1	13 Watt Compact Fluorescent 2-Lamp Fixture	26	0.026	96	1	Re-Lamp with (2) 10 Watt LED A19	20	0.020	74
PRESQUE ISLE	NEW BUILDING-RESIDENCE	8075 W. LAKE ROAD	INTERIOR		KITCHEN	1	60 Watt Incandescent 3-Lamp Fixture	180	0.180	667	1	Re-Lamp with (3) 10 Watt LED A19	30	0.030	111
PRESQUE ISLE	NEW BUILDING-RESIDENCE	8075 W. LAKE ROAD	INTERIOR		LIVING ROOM	2	13 Watt Compact Fluorescent Downlight	13	0.026	96	2	Re-Lamp with (1) 10 Watt LED BR30	10	0.020	74
PRESQUE ISLE	NEW BUILDING-RESIDENCE	8075 W. LAKE ROAD	INTERIOR		RESTROOM	1	13 Watt Compact Fluorescent 2-Lamp Fixture	26	0.026	96	1	Re-Lamp with (2) 10 Watt LED A19	20	0.020	74
PRESQUE ISLE	NEW BUILDING-RESIDENCE	8075 W. LAKE ROAD	INTERIOR		RESTROOM	2	13 Watt Compact Fluorescent Fixture	13	0.026	96	2	Re-Lamp with (1) 10 Watt LED A19	10	0.020	74
PRESQUE ISLE	NEW BUILDING-RESIDENCE	8075 W. LAKE ROAD	INTERIOR		GARAGE	4	Existing LED Fixture; No Retrofit	30	0.120	444	4	No Retrofit	30	0.120	444
PRESQUE ISLE	NEW BUILDING-RESIDENCE	8075 W. LAKE ROAD	INTERIOR		BASEMENT	6	13 Watt Compact Fluorescent Fixture	13	0.075	289	6	Re-Lamp with (1) 10 Watt LED A19	10	0.060	222
PRESQUE ISLE	NEW BUILDING-RESIDENCE	8075 W. LAKE ROAD	INTERIOR		UPSTAIRS HALL	1	13 Watt Compact Fluorescent Globe Fixture	13	0.013	114	1	Re-Lamp with (1) 8 Watt LED G25 Globe	8	0.008	70
PRESQUE ISLE	NEW BUILDING-RESIDENCE	8075 W. LAKE ROAD	INTERIOR		BATH	2	13 Watt Compact Fluorescent Fixture	13	0.026	96	2	Re-Lamp with (1) 10 Watt LED A19	10	0.020	74
PRESQUE ISLE	NEW BUILDING-RESIDENCE	8075 W. LAKE ROAD	INTERIOR		BATH	1	13 Watt Compact Fluorescent 2-Lamp Fixture	26	0.026	96	1	Re-Lamp with (2) 10 Watt LED A19	20	0.020	74
PRESQUE ISLE	NEW BUILDING-RESIDENCE	8075 W. LAKE ROAD	INTERIOR		BED	1	13 Watt Compact Fluorescent 2-Lamp Fixture	26	0.026	96	1	Re-Lamp with (2) 10 Watt LED A19	20	0.020	74
PRESQUE ISLE	NEW BUILDING-RESIDENCE	8075 W. LAKE ROAD	INTERIOR		MASTER	1	13 Watt Compact Fluorescent 2-Lamp Fixture	26	0.026	96	1	Re-Lamp with (2) 10 Watt LED A19	20	0.020	74
PRESQUE ISLE	NEW BUILDING-RESIDENCE	8075 W. LAKE ROAD	INTERIOR		BED	1	13 Watt Compact Fluorescent 2-Lamp Fixture	26	0.026	96	1	Re-Lamp with (2) 10 Watt LED A19	20	0.020	74
PRESQUE ISLE	NEW BUILDING-RESIDENCE	8075 W. LAKE ROAD	INTERIOR		BED	1	13 Watt Compact Fluorescent 2-Lamp Fixture	26	0.026	96	1	Re-Lamp with (2) 10 Watt LED A19	20	0.020	74
PRESQUE ISLE	NEW BUILDING-RESIDENCE	8075 W. LAKE ROAD	EXTERIOR		EXTERIOR BACK	1	60 Watt Incandescent A-Lamp Fixture	60	0.060	263	1	Re-Lamp with (1) 10 Watt LED A19	10	0.010	44
PRESQUE ISLE	RESIDENCE	1135 DUTCH ROAD	EXTERIOR		EXTERIOR FRONT	3	60 Watt Incandescent A-Lamp Fixture	60	0.180	788	3	Re-Lamp with (1) 10 Watt LED A19	10	0.030	131
PRESQUE ISLE	RESIDENCE	1135 DUTCH ROAD	INTERIOR		VESTIBULE	1	60 Watt Incandescent Globe Fixture	60	0.060	222	1	Re-Lamp with (1) 8 Watt LED G25 Globe	8	0.008	30
PRESQUE ISLE	RESIDENCE	1135 DUTCH ROAD	INTERIOR		LIVING ROOM	1	60 Watt Incandescent 3-Lamp Fixture	180	0.180	667	1	Re-Lamp with (3) 10 Watt LED A19	30	0.030	111
PRESQUE ISLE	RESIDENCE	1135 DUTCH ROAD	INTERIOR		KITCHEN	1	60 Watt Incandescent 5-Lamp A-Lamp Fixture	300	0.300	1,111	1	Re-Lamp with (5) 10 Watt LED A19	50	0.050	185
PRESQUE ISLE	RESIDENCE	1135 DUTCH ROAD	INTERIOR		KITCHEN	1	13 Watt Compact Fluorescent 2-Lamp Fixture	26	0.026	96	1	Re-Lamp with (2) 10 Watt LED A19	20	0.020	74
PRESQUE ISLE	RESIDENCE	1135 DUTCH ROAD	INTERIOR		LAUNDRY/MECH	1	60 Watt Incandescent Globe Fixture	60	0.060	60	1	Re-Lamp with (1) 8 Watt LED G25 Globe	8	0.008	8
PRESQUE ISLE	RESIDENCE	1135 DUTCH ROAD	INTERIOR		GARAGE	1	T12 1x4 2-Lamp Wrap Fixture	72	0.072	267	1	Retrofit with (2) 12.5 Watt LED T8 4' Lamps; Direct Wire to Socket	25	0.025	93
PRESQUE ISLE	RESIDENCE	1135 DUTCH ROAD	INTERIOR		GARAGE	5	60 Watt Incandescent A-Lamp Fixture	60	0.300	1,111	5	Re-Lamp with (1) 10 Watt LED A19	10	0.050	185
PRESQUE ISLE	RESIDENCE	1135 DUTCH ROAD	INTERIOR		SUN ROOM	2	60 Watt Incandescent 3-Lamp Candelabra	180	0.360	1,333	2	Re-Lamp with (3) 5 Watt LED Candelabra	15	0.030	111
PRESQUE ISLE	RESIDENCE	1135 DUTCH ROAD	INTERIOR		RESTROOM	2	40 Watt Incandescent Candelabra Fixture	40	0.080	296	2	Re-Lamp with (1) 5 Watt LED Candelabra	5	0.010	37
PRESQUE ISLE	RESIDENCE	1135 DUTCH ROAD	INTERIOR		RESTROOM	2	13 Watt Compact Fluorescent Fixture	13	0.026	96	2	Re-Lamp with (1) 10 Watt LED A19	10	0.020	74

©2013 Energy Systems Group, LLC

EXISTING FIXTURES											PROPOSED FIXTURE UPGRADE				
Park/Building Name	Building	Building #	Phase	Floor	Room Description	Qty	Description	Watts	kW	kWh	Qty	Description	Watts	kW	kWh
PRESQUE ISLE	RESIDENCE	1135 DUTCH ROAD	INTERIOR		HALLWAY	1	40 Watt Incandescent 2-Lamp Candelabra Fixture	80	0.080	296	1	Re-Lamp with (2) 5 Watt LED Candelabra	10	0.010	37
PRESQUE ISLE	RESIDENCE	1135 DUTCH ROAD	INTERIOR		BED	1	60 Watt Incandescent 3-Lamp Fixture	180	0.180	667	1	Re-Lamp with (3) 10 Watt LED A19	30	0.030	111
PRESQUE ISLE	RESIDENCE	1135 DUTCH ROAD	INTERIOR		BED	1	Existing LED Fixture; No Retrofit	20	0.020	74	1	No Retrofit	20	0.020	74
PRESQUE ISLE	RESIDENCE	1135 DUTCH ROAD	INTERIOR		BASEMENT	7	52 Watt Incandescent A-Lamp	52	0.364	1,348	7	Re-Lamp with (1) 10 Watt LED A19	10	0.070	259
PRESQUE ISLE	RESIDENCE	1135 DUTCH ROAD	INTERIOR		BASEMENT	1	T12 1x4 2-Lamp Wrap Fixture; Damaged	72	0.072	267	1	New 1x4 2-Lamp Wrap Fixture with (2) 12.5 Watt LED T8 4' Lamp; Direct Wire to Socket	25	0.025	93
PRESQUE ISLE	RESIDENCE	1135 DUTCH ROAD	INTERIOR		BASEMENT	1	T12 2x3 1-Lamp Strip Fixture	47	0.047	174	1	Retrofit with (1) 12 Watt LED T8 3' Lamp; Direct Wire to Socket	12	0.012	44
PRESQUE ISLE	RESIDENCE	1135 DUTCH ROAD	INTERIOR		MASTER BEDROOM	1	52 Watt Incandescent A-Lamp	52	0.052	193	1	Re-Lamp with (1) 10 Watt LED A19	10	0.010	37
PRESQUE ISLE	RESIDENCE	1135 DUTCH ROAD	INTERIOR		HALLWAY	2	52 Watt Incandescent 2-Lamp A-Lamp	104	0.208	770	2	Re-Lamp with (2) 10 Watt LED A19	20	0.040	148
PRESQUE ISLE	RESIDENCE	1135 DUTCH ROAD	INTERIOR		RESTROOM	1	60 Watt Incandescent 3-Lamp Fixture	180	0.180	667	1	Re-Lamp with (3) 10 Watt LED A19	30	0.030	111
PRESQUE ISLE	RESIDENCE	1135 DUTCH ROAD	INTERIOR		BED	2	52 Watt Incandescent A-Lamp	52	0.104	385	2	Re-Lamp with (1) 10 Watt LED A19	10	0.020	74
PRESQUE ISLE	RESIDENCE	1135 DUTCH ROAD	INTERIOR		CLOSET	2	52 Watt Incandescent Globe Fixture	52	0.104	104	2	Re-Lamp with (1) 8 Watt LED G25 Globe	8	0.016	16
PRESQUE ISLE	RESIDENCE	1135 DUTCH ROAD	EXTERIOR		EXTERIOR BACK	3	52 Watt Incandescent A-Lamp	52	0.156	683	3	Re-Lamp with (1) 10 Watt LED A19	10	0.030	131
PRESQUE ISLE	RESIDENCE	1135 DUTCH ROAD	EXTERIOR		EXTERIOR BACK	1	75 Watt Incandescent PAR38	75	0.075	329	1	Re-Lamp with (1) 17 Watt LED PAR38	17	0.017	74
PRESQUE ISLE	RESIDENCE	1135 DUTCH ROAD	INTERIOR		SHED	1	52 Watt Incandescent A-Lamp	52	0.052	52	1	Re-Lamp with (1) 10 Watt LED A19	10	0.010	10
PRESQUE ISLE	MAINTENACE HEADQUARTERS		INTERIOR		VESTIBULE	1	13 Watt Compact Fluorescent 2-Lamp Fixture	26	0.026	68	1	Re-Lamp with (2) 10 Watt LED A19	20	0.020	52
PRESQUE ISLE	MAINTENACE HEADQUARTERS		INTERIOR		HALLWAY	7	13 Watt Compact Fluorescent 2-Lamp Fixture	26	0.182	473	7	Re-Lamp with (2) 10 Watt LED A19	20	0.140	364
PRESQUE ISLE	MAINTENACE HEADQUARTERS		INTERIOR		HOT WATER CLOSET	1	60 Watt Incandescent A-Lamp Fixture	60	0.060	60	1	Re-Lamp with (1) 10 Watt LED A19	10	0.010	10
PRESQUE ISLE	MAINTENACE HEADQUARTERS		INTERIOR		OFFICE	1	T8 1x4 2-Lamp Wrap Fixture	62	0.062	161	1	Retrofit with (2) 12.5 Watt LED T8 4' Lamps; Direct Wire to Socket	25	0.025	65
PRESQUE ISLE	MAINTENACE HEADQUARTERS		INTERIOR		MENS RESTROOM	2	13 Watt Compact Fluorescent 2-Lamp Fixture	26	0.052	135	2	Re-Lamp with (2) 10 Watt LED A19	20	0.040	104
PRESQUE ISLE	MAINTENACE HEADQUARTERS		INTERIOR		CARPENTY SHOP	12	T12 1x4 2-Lamp Industrial Strip Fixture; Turret	72	0.864	2,247	12	New 1x4 2-Lamp Industrial Fixture with (2) 12.5 Watt LED T8 4' Lamp; Direct Wire to Socket	25	0.300	780
PRESQUE ISLE	MAINTENACE HEADQUARTERS		INTERIOR		STORAGE	1	T12 1x4 2-Lamp Wrap Fixture; Damaged	72	0.072	72	1	New 1x4 2-Lamp Wrap Fixture with (2) 12.5 Watt LED T8 4' Lamp; Direct Wire to Socket	25	0.025	25
PRESQUE ISLE	MAINTENACE HEADQUARTERS		INTERIOR		CARPENTY SHOP	1	T12 1x4 2-Lamp Strip Fixture	72	0.072	187	1	Retrofit with (2) 12.5 Watt LED T8 4' Lamps; Direct Wire to Socket	25	0.025	65
PRESQUE ISLE	MAINTENACE HEADQUARTERS		INTERIOR		SUPERVISORS OFFICE	3	T12 1x4 2-Lamp Wrap Fixture; Damaged	72	0.216	562	3	New 1x4 2-Lamp Wrap Fixture with (2) 12.5 Watt LED T8 4' Lamp; Direct Wire to Socket	25	0.075	195
PRESQUE ISLE	MAINTENACE HEADQUARTERS		INTERIOR		CLOSET	1	100 Watt Incandescent A-Lamp Fixture	100	0.100	100	1	Re-Lamp with (1) 18 Watt LED A21	18	0.018	18
PRESQUE ISLE	MAINTENACE HEADQUARTERS		INTERIOR		PARTS STORAGE	2	200 Watt Incandescent RLM Fixture	200	0.400	400	2	Re-Lamp with (1) 18 Watt LED A21	18	0.036	36
PRESQUE ISLE	MAINTENACE HEADQUARTERS		INTERIOR		PARTS STORAGE	1	T12 1x8 2-Lamp Strip Fixture with 60 Watt Lamps	123	0.123	123	1	Retrofit with (4) 12.5 Watt LED T8 4' Lamps and (1) 1x8 4-Lamp Strip Kit; Direct Wire to Socket	50	0.050	50

©2013 Energy Systems Group, LLC

EXISTING FIXTURES											PROPOSED FIXTURE UPGRADE				
Park/Building Name	Building	Building #	Phase	Floor	Room Description	Qty	Description	Watts	kW	kWh	Qty	Description	Watts	kW	kWh
PRESQUE ISLE	MAINTENACE HEADQUARTERS		INTERIOR		WOMENS RESTROOM	1	60 Watt Incandescent A-Lamp Fixture	60	0.060	156	1	Re-Lamp with (1) 10 Watt LED A19	10	0.010	26
PRESQUE ISLE	MAINTENACE HEADQUARTERS		INTERIOR		SHOWER	1	60 Watt Incandescent A-Lamp Fixture	60	0.060	156	1	Re-Lamp with (1) 10 Watt LED A19	10	0.010	26
PRESQUE ISLE	MAINTENACE HEADQUARTERS		INTERIOR		TIRE MACHINE ROOM	1	200 Watt Incandescent RLM Fixture	200	0.200	520	1	Re-Lamp with (1) 18 Watt LED A21	18	0.018	47
PRESQUE ISLE	MAINTENACE HEADQUARTERS		INTERIOR		TIRE MACHINE ROOM	1	100 Watt Incandescent A-Lamp Fixture	100	0.100	260	1	Re-Lamp with (1) 18 Watt LED A21	18	0.018	47
PRESQUE ISLE	MAINTENACE HEADQUARTERS		INTERIOR		TIRE MACHINE ROOM	1	T12 2x4 2-Lamp Surface Mount Fixture	78	0.078	203	1	Retrofit with (2) 12.5 Watt LED T8 4' Lamps; Direct Wire to Socket	25	0.025	65
PRESQUE ISLE	MAINTENACE HEADQUARTERS		INTERIOR		WASH BAY	2	T12 1x4 2-Lamp Wrap Fixture	72	0.144	375	2	Retrofit with (2) 12.5 Watt LED T8 4' Lamps; Direct Wire to Socket	25	0.050	130
PRESQUE ISLE	MAINTENACE HEADQUARTERS		INTERIOR		WASH BAY	1	200 Watt Incandescent A-Lamp Fixture	200	0.200	520	1	Re-Lamp with (1) 18 Watt LED A21	18	0.018	47
PRESQUE ISLE	MAINTENACE HEADQUARTERS		INTERIOR		WASH BAY	1	100 Watt Incandescent A-Lamp Fixture	100	0.100	260	1	Re-Lamp with (1) 18 Watt LED A21	18	0.018	47
PRESQUE ISLE	MAINTENACE HEADQUARTERS		INTERIOR		WASH BAY	6	75 Watt Incandescent PAR38	75	0.450	1,170	6	Re-Lamp with (1) 17 Watt LED PAR38	17	0.102	265
PRESQUE ISLE	MAINTENACE HEADQUARTERS		INTERIOR		WASH BAY	1	200 Watt Incandescent RLM; Difficult Access	200	0.200	520	1	Relamp with (1) 18 Watt LED A21; Difficult Access	15	0.015	39
PRESQUE ISLE	MAINTENACE HEADQUARTERS		INTERIOR		WASH BAY	1	100 Watt Incandescent RLM; Difficult Access	100	0.100	260	1	Relamp with (1) 18 Watt LED A21; Difficult Access	15	0.015	39
PRESQUE ISLE	MAINTENACE HEADQUARTERS		INTERIOR		WASH BAY	1	23 Watt Compact Fluorescent Fixture	23	0.023	60	1	Re-Lamp with (1) 10 Watt LED A19	10	0.010	26
PRESQUE ISLE	MAINTENACE HEADQUARTERS		INTERIOR		VEHICLE BAY	6	Existing LED Fixture; No Retrofit	100	0.600	1,561	6	No Retrofit	100	0.600	1,561
PRESQUE ISLE	MAINTENACE HEADQUARTERS		INTERIOR		VEHICLE BAY	7	T12VHO 1x8 2-Lamp Industrial Strip Fixture; Turret	440	3.080	8,011	7	New 1x8 6-Lamp Industrial Strip Fixture with (6) 12.5 Watt LED T8 4' Lamps; Direct Wire to Socket	75	0.525	1,366
PRESQUE ISLE	MAINTENACE HEADQUARTERS		INTERIOR		VEHICLE BAY	3	T12 1x4 2-Lamp Industrial Strip Fixture; Turret	72	0.216	562	3	New 1x4 2-Lamp Industrial Fixture with (2) 12.5 Watt LED T8 4' Lamp; Direct Wire to Socket	25	0.075	195
PRESQUE ISLE	MAINTENACE HEADQUARTERS		INTERIOR		CHAIN SHOP	1	T12 1x4 2-Lamp Industrial Strip Fixture	72	0.072	187	1	Retrofit with (2) 12.5 Watt LED T8 4' Lamps; Direct Wire to Socket	25	0.025	65
PRESQUE ISLE	MAINTENACE HEADQUARTERS		INTERIOR		SAW	1	T12 1x4 2-LampWrap Fixture; Damaged	72	0.072	187	1	New 1x4 2-Lamp Wrap Fixture with (2) 12.5 Watt LED T8 4' Lamp; Direct Wire to Socket	25	0.025	65
PRESQUE ISLE	MAINTENACE HEADQUARTERS		INTERIOR		UPSTAIRS HALL	1	65 Watt Incandescent R30 Fixture	65	0.065	569	1	Re-Lamp with (1) 10 Watt LED BR30	10	0.010	88
PRESQUE ISLE	MAINTENACE HEADQUARTERS		INTERIOR		VEHICLE SHOP OFFICE	1	Existing LED Fixture; No Retrofit	30	0.030	78	1	No Retrofit	30	0.030	78
PRESQUE ISLE	MAINTENACE HEADQUARTERS		INTERIOR		STORAGE	1	60 Watt Compact Fluorescent RLM Fixture	60	0.060	60	1	Re-Lamp with (1) 27 Watt LED Omni-Cob Lamp; Hardwire Ballast	27	0.027	27
PRESQUE ISLE	MAINTENACE HEADQUARTERS		INTERIOR		VEHICLE STORAGE	2	T12 1x8 2-Lamp Egg Crate Fixture	123	0.246	246	2	New 1x8 2-Lamp Wrap Fixture with (4) 12.5 Watt LED T8 Lamps; Direct Wire to Socket	50	0.100	100
PRESQUE ISLE	MAINTENACE HEADQUARTERS		EXTERIOR		EXTERIOR RIGHT	2	75 Watt Incandescent PAR38	75	0.150	657	2	Re-Lamp with (1) 17 Watt LED PAR38	17	0.034	149
PRESQUE ISLE	MAINTENACE HEADQUARTERS		EXTERIOR		EXTERIOR RIGHT	1	175 Watt Mercury Vapor Dusk to Dawn Fixture	210	0.210	920	1	New 26 Watt LED Dusk to Dawn Barnyard Fixture	26	0.026	114
PRESQUE ISLE	MAINTENACE HEADQUARTERS		EXTERIOR		BACK	1	13 Watt Compact Fluorescent Fixture	13	0.013	57	1	Re-Lamp with (1) 10 Watt LED A19	10	0.010	44
PRESQUE ISLE	MAINTENACE HEADQUARTERS		EXTERIOR		BACK	2	75 Watt Incandescent PAR38	75	0.150	657	2	Re-Lamp with (1) 17 Watt LED PAR38	17	0.034	149
PRESQUE ISLE	MAINTENACE HEADQUARTERS		EXTERIOR		FRONT	1	75 Watt Incandescent PAR38	75	0.075	329	1	Re-Lamp with (1) 17 Watt LED PAR38	17	0.017	74

©2013 Energy Systems Group, LLC

EXISTING FIXTURES											PROPOSED FIXTURE UPGRADE				
Park/Building Name	Building	Building #	Phase	Floor	Room Description	Qty	Description	Watts	kW	kWh	Qty	Description	Watts	kW	kWh
PRESQUE ISLE	MAINTENACE HEADQUARTERS		EXTERIOR		FRONT	2	Existing LED Fixture; No Retrofit	10	0.020	88	2	No Retrofit	10	0.020	88
PRESQUE ISLE	MAINTENACE HEADQUARTERS		EXTERIOR		FRONT	1	Existing LED Fixture; No Retrofit	10	0.010	44	1	No Retrofit	10	0.010	44
PRESQUE ISLE	MAINTENANCE TRACKER BARN		INTERIOR		GARAGE	4	60 Watt Incandescent A-Lamp Fixture	60	0.240	624	4	Re-Lamp with (1) 10 Watt LED A19	10	0.040	104
PRESQUE ISLE	MAINTENANCE STORAGE BARN		INTERIOR		BAYS	5	100 Watt Incandescent A-Lamp Fixture	100	0.500	1,301	5	Re-Lamp with (1) 18 Watt LED A21	18	0.090	234
PRESQUE ISLE	MAINTENANCE STORAGE BARN		INTERIOR		BAYS	4	200 Watt Incandescent A-Lamp Fixture	200	0.800	2,081	4	Re-Lamp with (1) 18 Watt LED A21	18	0.072	187
PRESQUE ISLE	MAINTENANCE STORAGE BARN		INTERIOR		BAYS WOOD STORAGE	4	100 Watt Incandescent A-Lamp Fixture	100	0.400	400	4	Re-Lamp with (1) 18 Watt LED A21	18	0.072	72
PRESQUE ISLE	MAINTENANCE STORAGE BARN		INTERIOR		BAYS WOOD STORAGE	1	23 Watt Compact Fluorescent Fixture	23	0.023	23	1	Re-Lamp with (1) 10 Watt LED A19	10	0.010	10
PRESQUE ISLE	MAINTENANCE STORAGE BARN		INTERIOR		PUMP ROOM	2	200 Watt Incandescent A-Lamp Fixture	200	0.400	400	2	Re-Lamp with (1) 18 Watt LED A21	18	0.036	36
PRESQUE ISLE	MAINTENANCE SUPPLY BARN		INTERIOR		SUPPLY BAY	4	T12VHO 1x8 2-Lamp Strip Fixture	440	1.760	4,578	4	New 1x8 6-Lamp Industrial Strip Fixture with (6) 2.5 Watt T8 LED Lamps; Direct Wire to Socket	75	0.300	780
PRESQUE ISLE	LIGHT HOUSE		INTERIOR		ENTRY	1	60 Watt Incandescent 4-Lamp Candelabra	240	0.240	662	1	Re-Lamp with (4) 5 Watt LED Candelabra	20	0.020	55
PRESQUE ISLE	LIGHT HOUSE		INTERIOR		CASHIER ROOM	1	60 Watt Incandescent A-Lamp Fixture	60	0.060	166	1	Re-Lamp with (1) 10 Watt LED A19	10	0.010	28
PRESQUE ISLE	LIGHT HOUSE		INTERIOR		DINING ROOM	1	60 Watt Incandescent 3-Lamp Candelabra	180	0.180	497	1	Re-Lamp with (3) 5 Watt LED Candelabra	15	0.015	41
PRESQUE ISLE	LIGHT HOUSE		INTERIOR		RESTROOM	1	40 Watt Incandescent 4-Lamp Globe	160	0.160	442	1	Re-Lamp with (4) 8 Watt LED G25 Globe	32	0.032	88
PRESQUE ISLE	LIGHT HOUSE		INTERIOR		RESTROOM	1	60 Watt Incandescent 4-Lamp Fixture	240	0.240	662	1	Re-Lamp with (4) 10 Watt LED A19	40	0.040	110
PRESQUE ISLE	LIGHT HOUSE		INTERIOR		RESTROOM	1	250 Watt Incandescent R40 Heat Lamp; No Retrofit	250	0.250	690	1	No Retrofit	250	0.250	690
PRESQUE ISLE	LIGHT HOUSE		INTERIOR		KITCHEN	1	13 Watt Compact Fluorescent 2-Lamp Fixture	26	0.026	72	1	Re-Lamp with (2) 10 Watt LED A19	20	0.020	55
PRESQUE ISLE	LIGHT HOUSE		INTERIOR		SUN ROOM	1	40 Watt Incandescent 2-Lamp Candelabra Fixture	80	0.080	221	1	Re-Lamp with (2) 5 Watt LED Candelabra	10	0.010	28
PRESQUE ISLE	LIGHT HOUSE		INTERIOR		MUD ROOM	1	60 Watt Incandescent A-Lamp Fixture	60	0.060	166	1	Re-Lamp with (1) 10 Watt LED A19	10	0.010	28
PRESQUE ISLE	LIGHT HOUSE		INTERIOR		BASEMENT	1	60 Watt Incandescent A-Lamp Fixture	60	0.060	166	1	Re-Lamp with (1) 10 Watt LED A19	10	0.010	28
PRESQUE ISLE	LIGHT HOUSE		INTERIOR		BASEMENT	1	T12 1x4 2-Lamp Wrap Fixture	72	0.072	199	1	Retrofit with (2) 12.5 Watt LED T8 4' Lamps; Direct Wire to Socket	25	0.025	69
PRESQUE ISLE	LIGHT HOUSE		INTERIOR		BASEMENT	1	23 Watt Compact Fluorescent Fixture	23	0.023	63	1	Re-Lamp with (1) 10 Watt LED A19	10	0.010	28
PRESQUE ISLE	LIGHT HOUSE		INTERIOR		BASEMENT	1	Existing LED Fixture; No Retrofit	10	0.010	28	1	No Retrofit	10	0.010	28
PRESQUE ISLE	LIGHT HOUSE		INTERIOR		BASEMENT	1	60 Watt Incandescent 2-Lamp Candelabra Fixture	120	0.120	331	1	Re-Lamp with (1) 5 Watt LED Candelabra	5	0.005	14
PRESQUE ISLE	LIGHT HOUSE		INTERIOR		UPPER LOBBY	1	60 Watt Incandescent 4-Lamp Fixture	240	0.240	662	1	Re-Lamp with (4) 10 Watt LED A19	40	0.040	110
PRESQUE ISLE	LIGHT HOUSE		INTERIOR		OFFICE	1	Existing LED Fixture; No Retrofit	10	0.010	28	1	No Retrofit	10	0.010	28
PRESQUE ISLE	LIGHT HOUSE		INTERIOR		RESTROOM	1	40 Watt Incandescent 2-Lamp Fixture	80	0.080	221	1	Re-Lamp with (2) 7 Watt LED A19	14	0.014	39

©2013 Energy Systems Group, LLC

EXISTING FIXTURES												PROPOSED FIXTURE UPGRADE				
Park/Building Name	Building	Building #	Phase	Floor	Room Description	Qty	Description	Watts	kW	kWh	Qty	Description	Watts	kW	kWh
PRESQUE ISLE	LIGHT HOUSE		INTERIOR		OFFICE	1	13 Watt Compact Fluorescent 4-Lamp Fixture	52	0.052	144	1	Re-Lamp with (4) 10 Watt LED A19	40	0.040	110
PRESQUE ISLE	LIGHT HOUSE		INTERIOR		CLOSET	2	60 Watt Incandescent A-Lamp Fixture	60	0.120	120	2	Re-Lamp with (1) 10 Watt LED A19	10	0.020	20
PRESQUE ISLE	LIGHT HOUSE		INTERIOR		CLOSET	1	60 Watt Incandescent A-Lamp Fixture	60	0.060	60	1	Re-Lamp with (1) 10 Watt LED A19	10	0.010	10
PRESQUE ISLE	LIGHT HOUSE		INTERIOR		LIGHTHOUSE BEACON	1	Existing LED Fixture; No Retrofit	40	0.040	110	1	No Retrofit	40	0.040	110
PRESQUE ISLE	LIGHT HOUSE		INTERIOR		LIGHTHOUSE FOYER	1	13 Watt Compact Fluorescent 3-Lamp Fixture	39	0.039	108	1	Relamp with (3) 10 Watt LED A19	30	0.030	83
PRESQUE ISLE	LIGHT HOUSE		EXTERIOR		FRONT	1	13 Watt Compact Fluorescent 2-Lamp Canopy	26	0.026	114	1	New 10 Watt LED Canopy Fixture	10	0.010	44
PRESQUE ISLE	LIGHT HOUSE		EXTERIOR		BACK	1	13 Watt Compact Fluorescent Fixture	13	0.013	57	1	Re-Lamp with (1) 10 Watt LED A19	10	0.010	44
PRESQUE ISLE	LIGHT HOUSE		EXTERIOR		LEFT	1	60 Watt Incandescent A-Lamp Fixture	60	0.060	263	1	Re-Lamp with (1) 10 Watt LED A19	10	0.010	44
PRESQUE ISLE	LIGHT HOUSE		INTERIOR		GARAGE	2	60 Watt Incandescent A-Lamp Fixture	60	0.120	331	2	Re-Lamp with (1) 10 Watt LED A19	10	0.020	55
PRESQUE ISLE	LIGHT HOUSE		INTERIOR		GARAGE	1	T12 1x4 2-Lamp Strip Fixture	72	0.072	199	1	Retrofit with (2) 12.5 Watt LED T8 4' Lamps; Direct Wire to Socket	25	0.025	69
PRESQUE ISLE	LIGHTHOUSE BATH		INTERIOR		MENS RESTROOM	1	Existing LED Fixture; No Retrofit	40	0.040	183	1	No Retrofit	40	0.040	183
PRESQUE ISLE	LIGHTHOUSE BATH		INTERIOR		WOMENS RESTROOM	1	Existing LED Fixture; No Retrofit	40	0.040	183	1	No Retrofit	40	0.040	183
PRESQUE ISLE	LIGHTHOUSE BATH		EXTERIOR		EXTERIOR	1	Existing LED Fixture; No Retrofit	40	0.040	175	1	No Retrofit	40	0.040	175
PRESQUE ISLE	BEACH 9 COMFORT STATION		INTERIOR		PIPE CHASE	2	13 Watt Compact Fluorescent Fixture	13	0.026	26	2	Re-Lamp with (1) 10 Watt LED A19	10	0.020	20
PRESQUE ISLE	BEACH 10 COMFORT STATION		INTERIOR		STORAGE	2	T8 1x4 2-Lamp Wrap Fixture	62	0.124	124	2	Retrofit with (2) 12.5 Watt LED T8 4' Lamps; Direct Wire to Socket	25	0.050	50
PRESQUE ISLE	BEACH 10 COMFORT STATION		INTERIOR		CONCESSION STAND	2	T12 1x4 2-Lamp Wrap Fixture	72	0.144	660	2	Retrofit with (2) 12.5 Watt LED T8 4' Lamps; Direct Wire to Socket	25	0.050	229
PRESQUE ISLE	BEACH 10 COMFORT STATION		INTERIOR		STORAGE	2	60 Watt Incandescent A-Lamp Jelly Jar Fixture	60	0.120	120	2	Re-Lamp with (1) 10 Watt LED A19	10	0.020	20
PRESQUE ISLE	BEACH 10 COMFORT STATION		INTERIOR		MENS RESTROOM	1	T12 1x4 2-Lamp Wrap Fixture	72	0.072	330	1	Retrofit with (2) 12.5 Watt LED T8 4' Lamps; Direct Wire to Socket	25	0.025	115
PRESQUE ISLE	BEACH 10 COMFORT STATION		INTERIOR		STORAGE	1	60 Watt Incandescent A-Lamp Jelly Jar Fixture	60	0.060	60	1	Re-Lamp with (1) 10 Watt LED A19	10	0.010	10
PRESQUE ISLE	BEACH 10 COMFORT STATION		INTERIOR		EXT. HALL	1	60 Watt Incandescent 2-Lamp Fixture	120	0.120	550	1	Re-Lamp with (2) 10 Watt LED A19	20	0.020	92
PRESQUE ISLE	BEACH 10 COMFORT STATION		EXTERIOR		EXTERIOR	1	75 Watt Incandescent PAR38 3-Lamp Fixture	225	0.225	986	1	Relamp with (3) 17 Watt LED PAR38	51	0.051	223
PRESQUE ISLE	BEACH 10 COMFORT STATION		INTERIOR		WOMENS RESTROOM	1	75 Watt Incandescent PAR38 3-Lamp Fixture	225	0.225	1,031	1	Relamp with (3) 17 Watt LED PAR38	51	0.051	234
PRESQUE ISLE	BEACH 10 COMFORT STATION		INTERIOR		WOMENS RESTROOM	1	T12 1x4 2-Lamp Wrap Fixture	72	0.072	330	1	Retrofit with (2) 12.5 Watt LED T8 4' Lamps; Direct Wire to Socket	25	0.025	115
PRESQUE ISLE	BEACH 10 COMFORT STATION		EXTERIOR		EXTERIOR	1	75 Watt Incandescent PAR38 3-Lamp Fixture	225	0.225	986	1	Relamp with (3) 17 Watt LED PAR38	51	0.051	223
PRESQUE ISLE	BEACH 10 COMFORT STATION		INTERIOR		PIPE CHASE	1	300 Watt Incandescent Jelly Jar	300	0.300	300	1	New 26 Watt LED Jelly Jar Fixture	27	0.027	27
PRESQUE ISLE	BEACH 10 COMFORT STATION		INTERIOR		PIPE CHASE	2	60 Watt Incandescent A-Lamp Fixture	60	0.120	120	2	Re-Lamp with (1) 10 Watt LED A19	10	0.020	20

©2013 Energy Systems Group, LLC

EXISTING FIXTURES											PROPOSED FIXTURE UPGRADE				
Park/Building Name	Building	Building #	Phase	Floor	Room Description	Qty	Description	Watts	kW	kWh	Qty	Description	Watts	kW	kWh
PRESQUE ISLE	BEACH 11 COMFORT STATION		INTERIOR		STORAGE	3	T12 1x4 2-Lamp Wrap Fixture	72	0.216	216	3	Retrofit with (2) 12.5 Watt LED T8 4' Lamps; Direct Wire to Socket	25	0.075	75
PRESQUE ISLE	BEACH 11 COMFORT STATION		INTERIOR		CONCESSION	1	T12 1x4 2-Lamp Wrap Fixture	72	0.072	330	1	Retrofit with (2) 12.5 Watt LED T8 4' Lamps; Direct Wire to Socket	25	0.025	115
PRESQUE ISLE	BEACH 11 COMFORT STATION		INTERIOR		MENS RESTROOM	1	T12 1x4 2-Lamp Wrap Fixture	72	0.072	330	1	Retrofit with (2) 12.5 Watt LED T8 4' Lamps; Direct Wire to Socket	25	0.025	115
PRESQUE ISLE	BEACH 11 COMFORT STATION		INTERIOR		MENS RESTROOM	1	75 Watt Incandescent PAR38 3-Lamp Fixture	225	0.225	1,031	1	Relamp with (3) 17 Watt LED PAR38	51	0.051	234
PRESQUE ISLE	BEACH 11 COMFORT STATION		EXTERIOR		EXT. TUNNEL	1	60 Watt Incandescent 2-Lamp Fixture	120	0.120	526	1	Re-Lamp with (2) 10 Watt LED A19	20	0.020	88
PRESQUE ISLE	BEACH 11 COMFORT STATION		EXTERIOR		EXT. TUNNEL	1	60 Watt Incandescent A-Lamp Jelly Jar Fixture	60	0.060	263	1	Re-Lamp with (1) 10 Watt LED A19	10	0.010	44
PRESQUE ISLE	BEACH 11 COMFORT STATION		INTERIOR		WOMENS RESTROOM	1	T12 1x4 2-Lamp Wrap Fixture	72	0.072	330	1	Retrofit with (2) 12.5 Watt LED T8 4' Lamps; Direct Wire to Socket	25	0.025	115
PRESQUE ISLE	BEACH 11 COMFORT STATION		INTERIOR		WOMENS RESTROOM	1	75 Watt Incandescent PAR38 3-Lamp Fixture	225	0.225	1,031	1	Relamp with (3) 17 Watt LED PAR38	51	0.051	234
PRESQUE ISLE	BEACH 11 COMFORT STATION		INTERIOR		PIPE CHASE	2	60 Watt Incandescent A-Lamp Jelly Jar Fixture	60	0.120	120	2	Re-Lamp with (1) 10 Watt LED A19	10	0.020	20
PRESQUE ISLE	BEACH 11 COMFORT STATION		EXTERIOR		EXTERIOR	1	75 Watt Incandescent PAR38 2-Lamp	150	0.150	657	1	Re-Lamp with (2) 17 Watt LED PAR38	34	0.034	149
PRESQUE ISLE	NORTH PIER COMFORT STATION		INTERIOR		PIPE CHASE	2	60 Watt Incandescent A-Lamp Jelly Jar Fixture	60	0.120	120	2	Re-Lamp with (1) 10 Watt LED A19	10	0.020	20
PRESQUE ISLE	EAST BOAT LIVERY PAVILION-PONTOON TOUR BLDG		INTERIOR		OFFICE	1	60 Watt Incandescent A-Lamp Fixture	60	0.060	166	1	Re-Lamp with (1) 10 Watt LED A19	10	0.010	28
PRESQUE ISLE	EAST BOAT LIVERY PAVILION-PONTOON TOUR BLDG		EXTERIOR		PORCH	1	Circline Fixture; No Retrofit	30	0.030	131	1	No Retrofit	30	0.030	131
PRESQUE ISLE	EAST BOAT LIVERY PAVILION-PONTOON TOUR BLDG		EXTERIOR		EXTERIOR	4	75 Watt Incandescent PAR38	75	0.300	1,314	4	Re-Lamp with (1) 17 Watt LED PAR38	17	0.068	298
PRESQUE ISLE	EAST BOAT LIVERY PAVILION-PONTOON TOUR BLDG		EXTERIOR		DOCK LIGHTS	1	13 Watt Plug-In CFL Fixture	14	0.014	61	1	No Retrofit	14	0.014	61
PRESQUE ISLE	EAST BOAT LIVERY RENTAL		INTERIOR		DESK	1	T12 1x4 2-Lamp Wrap Fixture	72	0.072	199	1	Retrofit with (2) 12.5 Watt LED T8 4' Lamps; Direct Wire to Socket	25	0.025	69
PRESQUE ISLE	EAST BOAT LIVERY RENTAL		INTERIOR		BACK SHOP	9	T12 1x4 2-Lamp Wrap Fixture	72	0.648	1,788	9	Retrofit with (2) 12.5 Watt LED T8 4' Lamps; Direct Wire to Socket	25	0.225	621
PRESQUE ISLE	EAST BOAT LIVERY RENTAL		INTERIOR		ENTRY TO RESTROOMS	4	100 Watt Incandescent 12" Downlight Fixture	100	0.400	1,832	4	Re-Lamp with (1) 17 Watt LED BR40	17	0.068	312
PRESQUE ISLE	EAST BOAT LIVERY RENTAL		INTERIOR		PIPE CHASE	1	60 Watt Incandescent A-Lamp Jelly Jar Fixture	60	0.060	60	1	Re-Lamp with (1) 10 Watt LED A19	10	0.010	10
PRESQUE ISLE	EAST BOAT LIVERY RENTAL		EXTERIOR		EXTERIOR	2	60 Watt Incandescent A-Lamp Jelly Jar Fixture	60	0.120	526	2	Re-Lamp with (1) 10 Watt LED A19	10	0.020	88
PRESQUE ISLE	EAST BOAT LIVERY RENTAL		EXTERIOR		PARKING LOT	1	Existing LED Fixture; No Retrofit	20	0.020	88	1	No Retrofit	20	0.020	88
PRESQUE ISLE	PERRY MONUMENT COMFORT STATION		INTERIOR		MENS RESTROOM	5	26 Watt Plug-In CFL 2-Lamp 7" Downlight	58	0.290	1,328	5	No Retrofit	58	0.290	1,328
PRESQUE ISLE	PERRY MONUMENT COMFORT STATION		INTERIOR		MENS RESTROOM	1	T8 1x4 2-Lamp Vanity Fixture; Damaged	62	0.062	284	1	New 1x2 2-Lamp Vanity Fixture with (2) 10 Watt LED 2' Lamps; Direct Wire to Socket	14	0.014	64
PRESQUE ISLE	PERRY MONUMENT COMFORT STATION		INTERIOR		HC RESTROOMS	1	T8 1x4 2-Lamp Vanity Fixture	62	0.062	284	1	Retrofit with (2) 12.5 Watt LED T8 4' Lamps; Direct Wire to Socket	25	0.025	115
PRESQUE ISLE	PERRY MONUMENT COMFORT STATION		INTERIOR		HC RESTROOMS	1	26 Watt Plug-In CFL 2-Lamp 7" Downlight	58	0.058	266	1	No Retrofit	58	0.058	266
PRESQUE ISLE	PERRY MONUMENT COMFORT STATION		INTERIOR		WOMENS RESTROOM	1	T8 1x4 2-Lamp Vanity Fixture	62	0.062	284	1	Retrofit with (2) 12.5 Watt LED T8 4' Lamps; Direct Wire to Socket	25	0.025	115

©2013 Energy Systems Group, LLC

EXISTING FIXTURES												PROPOSED FIXTURE UPGRADE				
Park/Building Name	Building	Building #	Phase	Floor	Room Description	Qty	Description	Watts	kW	kWh	Qty	Description	Watts	kW	kWh
PRESQUE ISLE	PERRY MONUMENT COMFORT STATION		INTERIOR		WOMENS RESTROOM	5	26 Watt Plug-In CFL 2-Lamp 7" Downlight	58	0.290	1,328	5	No Retrofit	58	0.290	1,328
PRESQUE ISLE	PERRY MONUMENT COMFORT STATION		INTERIOR		PIPE CHASE	2	60 Watt Incandescent A-Lamp Jelly Jar Fixture	60	0.120	120	2	Re-Lamp with (1) 10 Watt LED A19	10	0.020	20
PRESQUE ISLE	PERRY MONUMENT COMFORT STATION		EXTERIOR		EXTERIOR	3	26 Watt Plug-In CFL 2-Lamp 7" Downlight	58	0.174	762	3	Retrofit with 13 Watt LED 6" Downlight Kit	13	0.039	171
PRESQUE ISLE	PERRY MONUMENT COMFORT STATION		INTERIOR		MONUMENT	1	Existing LED Fixture; No Retrofit	0	0.000	0	1	No Retrofit	0	0.000	0
PRESQUE ISLE	EAST PIER COMFORT STATION		INTERIOR		PIPE CHASE	1	60 Watt Incandescent A-Lamp Fixture	60	0.060	60	1	Re-Lamp with (1) 10 Watt LED A19	10	0.010	10
PRESQUE ISLE	DUCK POND COMFORT STATION		INTERIOR		PIPE CHASE	2	60 Watt Incandescent A-Lamp Fixture	60	0.120	120	2	Re-Lamp with (1) 10 Watt LED A19	10	0.020	20
PRESQUE ISLE	SAWMILL COMFORT STATION		INTERIOR		PIPE CHASE	1	13 Watt Compact Fluorescent Jelly Jar Fixture; Damaged	13	0.013	13	1	New 10 Watt LED A19 Jelly Jar	9	0.009	9
PRESQUE ISLE	SAWMILL COMFORT STATION		INTERIOR		PIPE CHASE	1	60 Watt Incandescent Jelly Jar Fixture; Damaged	60	0.060	60	1	New 10 Watt LED A19 Jelly Jar	9	0.009	9
PRESQUE ISLE	ROTARY PAVILLION-WATERWORK		INTERIOR		LOBBY	3	23 Watt Compact Fluorescent Fixture	23	0.069	256	3	Re-Lamp with (1) 10 Watt LED A19	10	0.030	111
PRESQUE ISLE	ROTARY PAVILLION-WATERWORK		INTERIOR		KITCHEN	6	23 Watt Compact Fluorescent Fixture	23	0.138	511	6	Re-Lamp with (1) 10 Watt LED A19	10	0.060	222
PRESQUE ISLE	ROTARY PAVILLION-WATERWORK		INTERIOR		BANQUET HALL	10	23 Watt Compact Fluorescent Fixture	23	0.230	852	10	Re-Lamp with (1) 10 Watt LED A19	10	0.100	370
PRESQUE ISLE	ROTARY PAVILLION-WATERWORK		INTERIOR		MENS RESTROOM	5	23 Watt Compact Fluorescent Fixture	23	0.115	527	5	Re-Lamp with (1) 10 Watt LED A19	10	0.050	229
PRESQUE ISLE	ROTARY PAVILLION-WATERWORK		INTERIOR		WOMENS RESTROOM	5	23 Watt Compact Fluorescent Fixture	23	0.115	527	5	Re-Lamp with (1) 10 Watt LED A19	10	0.050	229
PRESQUE ISLE	ROTARY PAVILLION-WATERWORK		INTERIOR		HC RESTROOMS	1	23 Watt Compact Fluorescent Fixture	23	0.023	105	1	Re-Lamp with (1) 10 Watt LED A19	10	0.010	46
PRESQUE ISLE	ROTARY PAVILLION-WATERWORK		EXTERIOR		EXTERIOR FIREPLACE	6	23 Watt Compact Fluorescent Fixture	23	0.138	604	6	Re-Lamp with (1) 10 Watt LED A19	10	0.060	263
PRESQUE ISLE	ROTARY PAVILLION-WATERWORK		INTERIOR		PIPE CHASE	2	60 Watt Incandescent A-Lamp Fixture	60	0.120	120	2	Re-Lamp with (1) 10 Watt LED A19	10	0.020	20
PRESQUE ISLE	LIFE GUARD HQ		INTERIOR		BEING DEMOLISHED	1	Building set to be demolished for new construction; Area(s) Not Included in Scope/Pricing	0	0.000	0	1	No Retrofit	0	0.000	0
PRESQUE ISLE	LIFE GUARD HQ GARAGE		INTERIOR		GARAGE	4	60 Watt Incandescent A-Lamp Fixture	60	0.240	540	4	Re-Lamp with (1) 10 Watt LED A19	10	0.040	90
PRESQUE ISLE	SHELTER 1		INTERIOR		OPEN SHELTER	9	23 Watt Compact Fluorescent Fixture	23	0.207	767	9	Re-Lamp with (1) 10 Watt LED A19	10	0.090	333
PRESQUE ISLE	SHELTER 2		INTERIOR		OPEN SHELTER	12	23 Watt Compact Fluorescent Fixture	23	0.276	1,022	12	Re-Lamp with (1) 10 Watt LED A19	10	0.120	444
PRESQUE ISLE	SHELTER 3		INTERIOR		OPEN SHELTER	6	23 Watt Compact Fluorescent Fixture	23	0.138	511	6	Re-Lamp with (1) 10 Watt LED A19	10	0.060	222
PRESQUE ISLE	BEACH 6 COMFORT STATION		INTERIOR		CONCESSION STORAGE	2	T8 1x4 2-Lamp Wrap Fixture	62	0.124	124	2	Retrofit with (2) 12.5 Watt LED T8 4' Lamps; Direct Wire to Socket	25	0.050	50
PRESQUE ISLE	BEACH 6 COMFORT STATION		INTERIOR		CONCESSION STAND	2	60 Watt Incandescent 2-Lamp Fixture	120	0.240	1,099	2	Re-Lamp with (2) 10 Watt LED A19	20	0.040	183
PRESQUE ISLE	BEACH 6 COMFORT STATION		EXTERIOR		EXT HALL TUNNELL	2	60 Watt Incandescent 2-Lamp Fixture	120	0.240	1,051	2	Re-Lamp with (2) 10 Watt LED A19	20	0.040	175
PRESQUE ISLE	BEACH 6 COMFORT STATION		INTERIOR		STORAGE	2	60 Watt Incandescent A-Lamp Jelly Jar Fixture	60	0.120	120	2	Re-Lamp with (1) 10 Watt LED A19	10	0.020	20
PRESQUE ISLE	BEACH 6 COMFORT STATION		INTERIOR		MENS RESTROOM	1	T12 1x4 2-Lamp Wrap Fixture	72	0.072	330	1	Retrofit with (2) 12.5 Watt LED T8 4' Lamps; Direct Wire to Socket	25	0.025	115

©2013 Energy Systems Group, LLC

EXISTING FIXTURES											PROPOSED FIXTURE UPGRADE				
Park/Building Name	Building	Building #	Phase	Floor	Room Description	Qty	Description	Watts	kW	kWh	Qty	Description	Watts	kW	kWh
PRESQUE ISLE	BEACH 6 COMFORT STATION		EXTERIOR		EXTERIOR	3	75 Watt Incandescent PAR38	75	0.225	986	3	Re-Lamp with (1) 17 Watt LED PAR38	17	0.051	223
PRESQUE ISLE	BEACH 6 COMFORT STATION		INTERIOR		STORAGE	1	60 Watt Incandescent A-Lamp Jelly Jar Fixture	60	0.060	60	1	Re-Lamp with (1) 10 Watt LED A19	10	0.010	10
PRESQUE ISLE	BEACH 6 COMFORT STATION		INTERIOR		WOMENS RESTROOM	1	T12 1x4 2-Lamp Wrap Fixture	72	0.072	330	1	Retrofit with (2) 12.5 Watt LED T8 4' Lamps; Direct Wire to Socket	25	0.025	115
PRESQUE ISLE	BEACH 6 COMFORT STATION		EXTERIOR		EXTERIOR	3	75 Watt Incandescent PAR38	75	0.225	986	3	Re-Lamp with (1) 17 Watt LED PAR38	17	0.051	223
PRESQUE ISLE	BEACH 6 COMFORT STATION		EXTERIOR		EXTERIOR	2	75 Watt Incandescent PAR38	75	0.150	657	2	Re-Lamp with (1) 17 Watt LED PAR38	17	0.034	149
PRESQUE ISLE	BEACH 6 COMFORT STATION		INTERIOR		PIPE CHASE	2	60 Watt Incandescent A-Lamp Jelly Jar Fixture	60	0.120	120	2	Re-Lamp with (1) 10 Watt LED A19	10	0.020	20
PRESQUE ISLE	RESIDENCE NEAR COOKHOUSE		INTERIOR		GARAGE	1	60 Watt Compact Fluorescent	60	0.060	222	1	Re-Lamp with (1) 27 Watt LED Omni-Cob Lamp; Hardwire Ballast	27	0.027	100
PRESQUE ISLE	RESIDENCE NEAR COOKHOUSE		INTERIOR		GARAGE	1	23 Watt Compact Fluorescent Fixture	23	0.023	85	1	Re-Lamp with (1) 10 Watt LED A19	10	0.010	37
PRESQUE ISLE	RESIDENCE NEAR COOKHOUSE		INTERIOR		GARAGE	1	23 Watt Compact Fluorescent Fixture	23	0.023	85	1	Re-Lamp with (1) 10 Watt LED A19	10	0.010	37
PRESQUE ISLE	RESIDENCE NEAR COOKHOUSE		INTERIOR		GARAGE	1	23 Watt Compact Fluorescent Goose Neck Fixture	23	0.023	85	1	Re-Lamp with (1) 10 Watt LED A19	10	0.010	37
PRESQUE ISLE	RESIDENCE NEAR COOKHOUSE		EXTERIOR		EXTERIOR GARAGE	1	Existing LED Fixture; No Retrofit	20	0.020	88	1	No Retrofit	20	0.020	88
PRESQUE ISLE	RESIDENCE NEAR COOKHOUSE		EXTERIOR		EXTERIOR FRONT HOUSE	1	Existing LED Fixture; No Retrofit	40	0.040	175	1	No Retrofit	40	0.040	175
PRESQUE ISLE	RESIDENCE NEAR COOKHOUSE		INTERIOR		LIVING ROOM	5	Existing LED Fixture; No Retrofit	10	0.050	185	5	No Retrofit	10	0.050	185
PRESQUE ISLE	RESIDENCE NEAR COOKHOUSE		INTERIOR		KITCHEN	1	40 Watt Incandescent 4-Lamp Globe	160	0.160	593	1	Re-Lamp with (4) 8 Watt LED G25 Globe	32	0.032	119
PRESQUE ISLE	RESIDENCE NEAR COOKHOUSE		INTERIOR		KITCHEN	1	60 Watt Incandescent 6-Lamp Candelabra	240	0.240	889	1	Relamp with (6) 5 Watt LED Candelabra Lamps	30	0.030	111
PRESQUE ISLE	RESIDENCE NEAR COOKHOUSE		INTERIOR		HALLWAY	1	13 Watt Compact Fluorescent 2-Lamp Fixture	26	0.026	96	1	Re-Lamp with (2) 10 Watt LED A19	20	0.020	74
PRESQUE ISLE	RESIDENCE NEAR COOKHOUSE		INTERIOR		TV ROOM	1	40 Watt Incandescent 3-Lamp Candelabra Fixture	120	0.120	444	1	Re-Lamp with (3) 5 Watt LED Candelabra	15	0.015	56
PRESQUE ISLE	RESIDENCE NEAR COOKHOUSE		INTERIOR		COMPUTER ROOM	1	T8 1x4 2-Lamp Wrap Fixture	62	0.062	230	1	Retrofit with (2) 12.5 Watt LED T8 4' Lamps; Direct Wire to Socket	25	0.025	93
PRESQUE ISLE	RESIDENCE NEAR COOKHOUSE		INTERIOR		HALLWAY	2	13 Watt Compact Fluorescent 2-Lamp Fixture	26	0.052	193	2	Re-Lamp with (2) 10 Watt LED A19	20	0.040	148
PRESQUE ISLE	RESIDENCE NEAR COOKHOUSE		INTERIOR		RESTROOM/BATH	2	60 Watt Incandescent 3-Lamp Fixture	180	0.360	1,333	2	Re-Lamp with (3) 10 Watt LED A19	30	0.060	222
PRESQUE ISLE	RESIDENCE NEAR COOKHOUSE		INTERIOR		RESTROOM/BATH	1	13 Watt Compact Fluorescent 2-Lamp Fixture	26	0.026	96	1	Re-Lamp with (2) 10 Watt LED A19	20	0.020	74
PRESQUE ISLE	RESIDENCE NEAR COOKHOUSE		INTERIOR		RESTROOM/BATH	1	13 Watt Compact Fluorescent Fixture	13	0.013	48	1	Re-Lamp with (1) 10 Watt LED A19	10	0.010	37
PRESQUE ISLE	RESIDENCE NEAR COOKHOUSE		INTERIOR		CLOSET	1	60 Watt Incandescent A-Lamp Fixture	60	0.060	60	1	Re-Lamp with (1) 10 Watt LED A19	10	0.010	10
PRESQUE ISLE	RESIDENCE NEAR COOKHOUSE		INTERIOR		BEDROOM	1	Existing LED Fixture; No Retrofit	20	0.020	74	1	No Retrofit	20	0.020	74
PRESQUE ISLE	RESIDENCE NEAR COOKHOUSE		INTERIOR		CLOSET	1	13 Watt Compact Fluorescent Globe Fixture	13	0.013	13	1	Re-Lamp with (1) 8 Watt LED G25 Globe	8	0.008	8
PRESQUE ISLE	RESIDENCE NEAR COOKHOUSE		INTERIOR		BEDROOM	1	13 Watt Compact Fluorescent 2-Lamp Fixture	26	0.026	96	1	Re-Lamp with (2) 10 Watt LED A19	20	0.020	74

©2013 Energy Systems Group, LLC

EXISTING FIXTURES												PROPOSED FIXTURE UPGRADE				
Park/Building Name	Building	Building #	Phase	Floor	Room Description	Qty	Description	Watts	kW	kWh	Qty	Description	Watts	kW	kWh
PRESQUE ISLE	RESIDENCE NEAR COOKHOUSE		INTERIOR		CLOSET 1 AND 2	2	13 Watt Compact Fluorescent Globe Fixture	13	0.026	26	2	Re-Lamp with (1) 8 Watt LED G25 Globe	8	0.016	16
PRESQUE ISLE	RESIDENCE NEAR COOKHOUSE		INTERIOR		MASTER BED	1	13 Watt Compact Fluorescent 2-Lamp Fixture	26	0.026	96	1	Re-Lamp with (2) 10 Watt LED A19	20	0.020	74
PRESQUE ISLE	RESIDENCE NEAR COOKHOUSE		INTERIOR		RESTROOM	2	13 Watt Compact Fluorescent Fixture	13	0.026	96	2	Re-Lamp with (1) 10 Watt LED A19	10	0.020	74
PRESQUE ISLE	RESIDENCE NEAR COOKHOUSE		INTERIOR		UPSTAIRS PLAY ROOM	1	13 Watt Compact Fluorescent Fixture	13	0.013	114	1	Re-Lamp with (1) 10 Watt LED A19	10	0.010	88
PRESQUE ISLE	RESIDENCE NEAR COOKHOUSE		INTERIOR		UPSTAIRS PLAY ROOM	1	13 Watt Compact Fluorescent 6-Lamp Fixture	78	0.078	683	1	Relamp with (6) 10 Watt LED A19	60	0.060	526
PRESQUE ISLE	RESIDENCE NEAR COOKHOUSE		INTERIOR		RESTROOM	1	Existing LED Fixture; No Retrofit	30	0.030	111	1	No Retrofit	30	0.030	111
PRESQUE ISLE	RESIDENCE NEAR COOKHOUSE		INTERIOR		RESTROOM	1	13 Watt Compact Fluorescent Fixture	13	0.013	48	1	Re-Lamp with (1) 10 Watt LED A19	10	0.010	37
PRESQUE ISLE	RESIDENCE NEAR COOKHOUSE		INTERIOR		UPPER BED	1	13 Watt Compact Fluorescent 2-Lamp Fixture	26	0.026	96	1	Re-Lamp with (2) 10 Watt LED A19	20	0.020	74
PRESQUE ISLE	RESIDENCE NEAR COOKHOUSE		INTERIOR		UPPER BED	1	13 Watt Compact Fluorescent 2-Lamp Fixture	26	0.026	96	1	Re-Lamp with (2) 10 Watt LED A19	20	0.020	74
PRESQUE ISLE	RESIDENCE NEAR COOKHOUSE		INTERIOR		CLOSET	2	13 Watt Compact Fluorescent Fixture	13	0.026	26	2	Re-Lamp with (1) 10 Watt LED A19	10	0.020	20
PRESQUE ISLE	RESIDENCE NEAR COOKHOUSE		INTERIOR		CRAWL SPACE	1	13 Watt Compact Fluorescent Fixture	13	0.013	13	1	Re-Lamp with (1) 10 Watt LED A19	10	0.010	10
PRESQUE ISLE	RESIDENCE NEAR COOKHOUSE		INTERIOR		BASEMENT	5	23 Watt Compact Fluorescent Fixture	23	0.115	426	5	Re-Lamp with (1) 10 Watt LED A19	10	0.050	185
PRESQUE ISLE	RESIDENCE NEAR COOKHOUSE		INTERIOR		BASEMENT	3	Existing LED Fixture; No Retrofit	10	0.030	111	3	No Retrofit	10	0.030	111
PRESQUE ISLE	RESIDENCE NEAR COOKHOUSE		INTERIOR		BASEMENT	1	T12 1x4 1-Lamp Strip Fixture	43	0.043	159	1	Retrofit with (1) 12.5 Watt LED T8 4' Lamps; Direct Wire to Socket	12.5	0.013	46
PRESQUE ISLE	RESIDENCE NEAR COOKHOUSE		EXTERIOR		EXTERIOR BACK	2	75 Watt Incandescent PAR38	75	0.150	657	2	Re-Lamp with (1) 17 Watt LED PAR38	17	0.034	149
PRESQUE ISLE	TOM RIDGE CENTER		EXTERIOR		EXTERIOR PARKING LOT FRONT	12	250 Watt Metal Halide 2-Head Shoebox Fixture; White	590	7.080	31,010	12	(2) New 125 Watt LED Shoebox Fixtures; White	268	3.216	14,086
PRESQUE ISLE	TOM RIDGE CENTER		EXTERIOR		DRIVE LANE/SIDEWALK	15	Existing Decorative Setus Pole; No Retrofit	125	1.875	8,213	15	No Retrofit	125	1.875	8,213
PRESQUE ISLE	TOM RIDGE CENTER		INTERIOR	B	MAINTENANCE SHOP	4	T12HO 1x8 3-Lamp Industrial Strip Fixture; Turret	355	1.420	5,260	4	New 1x8 6-Lamp Industrial Strip Fixture with (6) 12.5 Watt LED T8 4' Lamps; Direct Wire to Socket	75	0.300	1,111
PRESQUE ISLE	TOM RIDGE CENTER		INTERIOR	B	CLOSET	1	Existing LED Fixture; No Retrofit	45	0.045	45	1	No Retrofit	45	0.045	45
PRESQUE ISLE	TOM RIDGE CENTER		INTERIOR	B	ELEVATOR ROOM	1	T8 1x4 3-Lamp Industrial Strip Fixture	84	0.084	311	1	Retrofit with (3) 12.5 Watt LED T8 4' Lamps; Direct Wire to Socket	37.5	0.038	139
PRESQUE ISLE	TOM RIDGE CENTER		INTERIOR	B	STORAGE	2	T12 1x8 3-Lamp Industrial Strip Fixture; Turret	309	0.618	618	2	New 1x6 6-Lamp Industrial Strip Fixture with (6) 12.5 Watt LED T8 4' Lamps; Direct Wire to Socket	75	0.150	150
PRESQUE ISLE	TOM RIDGE CENTER		INTERIOR	B	STORAGE	3	T12 1x8 3-Lamp Industrial Strip Fixture; Turret	309	0.927	927	3	New 1x6 6-Lamp Industrial Strip Fixture with (6) 12.5 Watt LED T8 4' Lamps; Direct Wire to Socket	75	0.225	225
PRESQUE ISLE	TOM RIDGE CENTER		INTERIOR	B	PMCA	2	T12 1x8 3-Lamp Industrial Strip Fixture; Turret	309	0.618	2,289	2	New 1x6 6-Lamp Industrial Strip Fixture with (6) 12.5 Watt LED T8 4' Lamps; Direct Wire to Socket	75	0.150	556
PRESQUE ISLE	TOM RIDGE CENTER		INTERIOR	B	PMCA	1	T8 1x4 3-Lamp Industrial Strip Fixture	84	0.084	311	1	Retrofit with (3) 12.5 Watt LED T8 4' Lamps; Direct Wire to Socket	37.5	0.038	139
PRESQUE ISLE	TOM RIDGE CENTER		INTERIOR	B	NATURAL HISTORY	8	TT5 2x2 2-Lamp FT40 Troffer Fixture with 40 Watt Biax Lamps	76	0.608	2,252	8	Retrofit with (2) 17 Watt LED FT40; Direct Wire to Socket	34	0.272	1,007
PRESQUE ISLE	TOM RIDGE CENTER		INTERIOR	B	STORAGE	15	TT5 2x2 2-Lamp FT40 Troffer Fixture with 40 Watt Biax Lamps	76	1.140	1,140	15	Retrofit with (2) 17 Watt LED FT40; Direct Wire to Socket	34	0.510	510

©2013 Energy Systems Group, LLC

EXISTING FIXTURES											PROPOSED FIXTURE UPGRADE				
Park/Building Name	Building	Building #	Phase	Floor	Room Description	Qty	Description	Watts	kW	kWh	Qty	Description	Watts	kW	kWh
PRESQUE ISLE	TOM RIDGE CENTER		INTERIOR	B	STORAGE	4	50 Watt Incandescent PAR20	50	0.200	200	4	Re-Lamp with (1) 8 Watt LED PAR20	8	0.032	32
PRESQUE ISLE	TOM RIDGE CENTER		INTERIOR	B	COMMS CLOSET	1	T8 1x4 3-Lamp Industrial Strip Fixture	84	0.084	84	1	Retrofit with (3) 12.5 Watt LED T8 4' Lamps; Direct Wire to Socket	37.5	0.038	38
PRESQUE ISLE	TOM RIDGE CENTER		INTERIOR	B	ELECTRICAL	3	T12 1x8 3-Lamp Industrial Strip Fixture; Turret	309	0.927	927	3	New 1x8 6-Lamp Industrial Strip Fixture with (6) 12.5 Watt LED T8 4' Lamps; Direct Wire to Socket	75	0.225	225
PRESQUE ISLE	TOM RIDGE CENTER		INTERIOR	B	BOILER	3	T8 1x8 6-Lamp Industrial Strip Fxiture	168	0.504	1,867	3	Retrofit with (6) 12.5 Watt LED T8 4' Lamps; Direct Wire to Socket	75	0.225	833
PRESQUE ISLE	TOM RIDGE CENTER		INTERIOR	B	BOILER	2	3 Watt LED 2-Lamp Exit Sign	3	0.006	53	2	No Retrofit	3	0.006	53
PRESQUE ISLE	TOM RIDGE CENTER		INTERIOR	B	BASEMENT HALLWAY	4	TT5 2x2 2-Lamp FT40 Troffer Fixture with 40 Watt Biax Lamps	76	0.304	1,126	4	Retrofit with (2) 17 Watt LED FT40; Direct Wire to Socket	34	0.136	504
PRESQUE ISLE	TOM RIDGE CENTER		INTERIOR	B	BASEMENT HALLWAY	7	Existing LED Fixture; No Retrofit	30	0.210	778	7	No Retrofit	30	0.210	778
PRESQUE ISLE	TOM RIDGE CENTER		INTERIOR	B	STAIRWELL	7	Existing LED Fixture; No Retrofit	15	0.105	920	7	No Retrofit	15	0.105	920
PRESQUE ISLE	TOM RIDGE CENTER		INTERIOR	B	STAIRWELL	1	T8 1x4 3-Lamp Industrial Strip Fixture	84	0.084	736	1	Retrofit with (3) 12.5 Watt LED T8 4' Lamps; Direct Wire to Socket	37.5	0.038	329
PRESQUE ISLE	TOM RIDGE CENTER		INTERIOR	1	MENS RESTROOM	3	Existing LED Fixture; No Retrofit	30	0.090	348	3	No Retrofit	30	0.090	348
PRESQUE ISLE	TOM RIDGE CENTER		INTERIOR	1	MENS RESTROOM	1	T8 1x3 2-Lamp Strip Fixture; Difficult Access	49	0.049	189	1	Retrofit with (2) 12 Watt LED T8 3' Lamps; Direct Wire to Socket; Difficult Access	24	0.024	93
PRESQUE ISLE	TOM RIDGE CENTER		INTERIOR	1	WOMENS RESTROOM	3	Existing LED Fixture; No Retrofit	30	0.090	348	3	No Retrofit	30	0.090	348
PRESQUE ISLE	TOM RIDGE CENTER		INTERIOR	1	WOMENS RESTROOM	1	T8 1x3 2-Lamp Strip Fixture; Difficult Access	49	0.049	189	1	Retrofit with (2) 12 Watt LED T8 3' Lamps; Direct Wire to Socket; Difficult Access	24	0.024	93
PRESQUE ISLE	TOM RIDGE CENTER		INTERIOR	1	RESTROOM VESTIBULE	1	26 Watt Plug-In CFL 2-Lamp 8" Downlight	58	0.058	224	1	No Retrofit	58	0.058	224
PRESQUE ISLE	TOM RIDGE CENTER		INTERIOR	1	CLASSROOM	18	TT5 2x2 2-Lamp FT40 Troffer Fixture with 40 Watt Biax Lamps; Dimming	67	1.206	4,467	18	No Retrofit	67	1.206	4,467
PRESQUE ISLE	TOM RIDGE CENTER		INTERIOR	1	CLOSET	2	T8 1x4 3-Lamp Industrial Strip Fixture	84	0.168	168	2	Retrofit with (3) 12.5 Watt LED T8 4' Lamps; Direct Wire to Socket	37.5	0.075	75
PRESQUE ISLE	TOM RIDGE CENTER		INTERIOR	1	CLASSROOM	18	TT5 2x2 2-Lamp FT40 Troffer Fixture with 40 Watt Biax Lamps; Dimming	67	1.206	4,467	18	No Retrofit	67	1.206	4,467
PRESQUE ISLE	TOM RIDGE CENTER		INTERIOR	1	CLASSROOM	2	Existing LED Fixture; No Retrofit	10	0.020	74	2	No Retrofit	10	0.020	74
PRESQUE ISLE	TOM RIDGE CENTER		INTERIOR	1	STORAGE	3	T8 1x4 3-Lamp Industrial Strip Fixture	84	0.252	252	3	Retrofit with (3) 12.5 Watt LED T8 4' Lamps; Direct Wire to Socket	37.5	0.113	113
PRESQUE ISLE	TOM RIDGE CENTER		INTERIOR	1	CONFERENCE	36	TT5 2x2 2-Lamp FT40 Troffer Fixture with 40 Watt Biax Lamps; Dimming	67	2.412	8,934	36	No Retrofit	67	2.412	8,934
PRESQUE ISLE	TOM RIDGE CENTER		INTERIOR	1	CONFERENCE	38	Existing LED Fixture; No Retrofit	10	0.380	1,408	38	No Retrofit	10	0.380	1,408
PRESQUE ISLE	TOM RIDGE CENTER		INTERIOR	1	CONFERENCE	16	Existing LED Fixture; No Retrofit	10	0.160	593	16	No Retrofit	10	0.160	593
PRESQUE ISLE	TOM RIDGE CENTER		INTERIOR	1	DISCOVERY CENTER	4	26 Watt Plug-In CFL 2-Lamp 8" Downlight	58	0.232	859	4	No Retrofit	58	0.232	859
PRESQUE ISLE	TOM RIDGE CENTER		INTERIOR	1	DISCOVERY CENTER	12	T8 1x4 2-Lamp Strip Fixture; Dimming; Difficult Access	62	0.744	2,756	12	Retrofit with (2) 14 Watt LED T8 4' Lamps and (1) Dimming Driver; Difficult Access	32	0.384	1,422
PRESQUE ISLE	TOM RIDGE CENTER		INTERIOR	1	DISCOVERY CENTER	2	Existing LED Fixture; No Retrofit	20	0.040	148	2	No Retrofit	20	0.040	148
PRESQUE ISLE	TOM RIDGE CENTER		INTERIOR	1	DISCOVERY CENTER	3	39 Watt Ceramic Metal Halide PAR20	50	0.150	556	3	No Retrofit	50	0.150	556

©2013 Energy Systems Group, LLC

EXISTING FIXTURES												PROPOSED FIXTURE UPGRADE				
Park/Building Name	Building	Building #	Phase	Floor	Room Description	Qty	Description	Watts	kW	kWh	Qty	Description	Watts	kW	kWh
PRESQUE ISLE	TOM RIDGE CENTER		INTERIOR	1	MUSEUM	76	39 Watt Ceramic Metal Halide PAR20	50	3.800	14,075	76	No Retrofit	50	3.800	14,075
PRESQUE ISLE	TOM RIDGE CENTER		INTERIOR	1	MUSEUM	18	TT5 2x2 1-Lamp FT40 Troffer Fixture with 40 Watt Biax Lamp	38	0.684	2,534	18	No Retrofit	38	0.684	2,534
PRESQUE ISLE	TOM RIDGE CENTER		INTERIOR	1	MUSEUM	4	T5HO 1x4 1-Lamp Strip Fixture	62	0.248	919	4	No Retrofit	62	0.248	919
PRESQUE ISLE	TOM RIDGE CENTER		INTERIOR	1	MUSEUM	45	Existing LED Fixture; No Retrofit	20	0.900	3,334	45	No Retrofit	20	0.900	3,334
PRESQUE ISLE	TOM RIDGE CENTER		INTERIOR	1	MUSEUM	16	37 Watt Metal Halide Powerball Lamp	50	0.800	2,963	16	No Retrofit	50	0.800	2,963
PRESQUE ISLE	TOM RIDGE CENTER		INTERIOR	1	MUSEUM	3	T5 1x3 1-Lamp Strip Fixture; Track	24	0.072	267	3	No Retrofit	24	0.072	267
PRESQUE ISLE	TOM RIDGE CENTER		INTERIOR	1	MUSEUM	4	Theatre Lighting; No Retrofit	100	0.400	1,482	4	No Retrofit	100	0.400	1,482
PRESQUE ISLE	TOM RIDGE CENTER		INTERIOR	1	MUSEUM	5	Existing LED Fixture; No Retrofit	20	0.100	370	5	No Retrofit	20	0.100	370
PRESQUE ISLE	TOM RIDGE CENTER		INTERIOR	1	MUSEUM	2	Existing LED Fixture; No Retrofit	10	0.020	74	2	No Retrofit	10	0.020	74
PRESQUE ISLE	TOM RIDGE CENTER		INTERIOR	1	MUSEUM	17	50 Watt Incandescent MR16 Fixture	50	0.850	3,148	17	Re-Lamp with (1) 7 Watt LED MR16	7	0.119	441
PRESQUE ISLE	TOM RIDGE CENTER		INTERIOR	1	THEATER/LOBBY	4	Existing LED Fixture; No Retrofit	40	0.160	593	4	No Retrofit	40	0.160	593
PRESQUE ISLE	TOM RIDGE CENTER		INTERIOR	1	THEATER/LOBBY	19	Existing LED Fixture; No Retrofit	40	0.760	2,815	19	No Retrofit	40	0.760	2,815
PRESQUE ISLE	TOM RIDGE CENTER		INTERIOR	1	THEATER/LOBBY	8	TT5 1-Lamp FT36 Fixture with 36 Watt Biax Lamp	32	0.256	948	8	No Retrofit	32	0.256	948
PRESQUE ISLE	TOM RIDGE CENTER		INTERIOR	1	BIG GREEN SCREEN	4	Existing LED Fixture; No Retrofit	10	0.040	148	4	No Retrofit	10	0.040	148
PRESQUE ISLE	TOM RIDGE CENTER		INTERIOR	1	BIG GREEN SCREEN	6	TT5 2x2 2-Lamp FT40 Troffer Fixture with 40 Watt Biax Lamps	76	0.456	1,689	6	Retrofit with (2) 17 Watt LED FT40; Direct Wire to Socket	34	0.204	756
PRESQUE ISLE	TOM RIDGE CENTER		INTERIOR	1	CONTROL ROOM	13	T8 2x2 2-Lamp U-Lamp Troffer Fixture with 1-5/8" Lamps	62	0.806	2,985	13	Retrofit with (2) 10 Watt LED T8 2' Lamps and (1) 2x2 2-Lamp White Reflector Kit; Direct Wire to Socket	20	0.260	963
PRESQUE ISLE	TOM RIDGE CENTER		INTERIOR	1	CONTROL ROOM	1	T8 2x2 2-Lamp U-Lamp Troffer Fixture with 1-5/8" Lamps	62	0.062	230	1	Retrofit with (2) 10 Watt LED T8 2' Lamps and (1) 2x2 2-Lamp White Reflector Kit; Direct Wire to Socket	20	0.020	74
PRESQUE ISLE	TOM RIDGE CENTER		INTERIOR	1	CONTROL ROOM	11	Existing LED Fixture; No Retrofit	40	0.440	1,630	11	No Retrofit	40	0.440	1,630
PRESQUE ISLE	TOM RIDGE CENTER		INTERIOR	1	RESTROOM	1	T8 2x2 2-Lamp U-Lamp Troffer Fixture with 1-5/8" Lamps	62	0.062	240	1	Retrofit with (2) 10 Watt LED T8 2' Lamps and (1) 2x2 2-Lamp White Reflector Kit; Direct Wire to Socket	20	0.020	77
PRESQUE ISLE	TOM RIDGE CENTER		INTERIOR	1	RESTROOM	1	T8 2x2 2-Lamp U-Lamp Troffer Fixture with 1-5/8" Lamps	62	0.062	240	1	Retrofit with (2) 10 Watt LED T8 2' Lamps and (1) 2x2 2-Lamp White Reflector Kit; Direct Wire to Socket	20	0.020	77
PRESQUE ISLE	TOM RIDGE CENTER		INTERIOR	1	CONCESSION STAND	1	TT5 1-Lamp FT36 Fixture with 36 Watt Biax Lamp	32	0.032	119	1	No Retrofit	32	0.032	119
PRESQUE ISLE	TOM RIDGE CENTER		INTERIOR	1	STORAGE	2	T8 1x4 2-Lamp Wrap Fixture	62	0.124	124	2	Retrofit with (2) 12.5 Watt LED T8 4' Lamps; Direct Wire to Socket	25	0.050	50
PRESQUE ISLE	TOM RIDGE CENTER		INTERIOR	1	STORAGE/MECH	2	T8 1x4 2-Lamp Wrap Fixture	62	0.124	124	2	Retrofit with (2) 12.5 Watt LED T8 4' Lamps; Direct Wire to Socket	25	0.050	50
PRESQUE ISLE	TOM RIDGE CENTER		INTERIOR	1	MUSEUM CENTER/INFO	25	Existing LED Fixture; No Retrofit	40	1.000	3,704	25	No Retrofit	40	1.000	3,704
PRESQUE ISLE	TOM RIDGE CENTER		INTERIOR	1	MUSEUM CENTER/INFO	1	39 Watt Ceramic Metal Halide PAR20	50	0.050	185	1	No Retrofit	50	0.050	185
PRESQUE ISLE	TOM RIDGE CENTER		INTERIOR	1	VESTIBULE	4	20 Watt Incandescent MR11	20	0.080	296	4	Re-Lamp with (1) 2 Watt LED MR11 Elevator Lamp	2	0.008	30

©2013 Energy Systems Group, LLC

EXISTING FIXTURES												PROPOSED FIXTURE UPGRADE				
Park/Building Name	Building	Building #	Phase	Floor	Room Description	Qty	Description	Watts	kW	kWh	Qty	Description	Watts	kW	kWh
PRESQUE ISLE	TOM RIDGE CENTER		INTERIOR	1	DISPLAY	1	T5HO 1x4 1-Lamp Strip Fixture	62	0.062	230	1	No Retrofit	62	0.062	230
PRESQUE ISLE	TOM RIDGE CENTER		INTERIOR	1	GIFT SHOP	8	Existing LED Fixture; No Retrofit	10	0.080	296	8	No Retrofit	10	0.080	296
PRESQUE ISLE	TOM RIDGE CENTER		INTERIOR	1	GIFT SHOP	26	Existing LED Fixture; No Retrofit	20	0.520	1,926	26	No Retrofit	20	0.520	1,926
PRESQUE ISLE	TOM RIDGE CENTER		INTERIOR	1	GIFT SHOP	14	T8 1x4 4-Lamp Direct/Indirect Linear Fixture; Dimming	106	1.484	5,497	14	Retrofit with (4) 14 Watt LED T8 4' Lamps and (2) Dimming Driver	64	0.896	3,319
PRESQUE ISLE	TOM RIDGE CENTER		INTERIOR	1	GIFT SHOP	1	T8 1x4 2-Lamp Direct/Indirect Linear Fixture; Dimming	62	0.062	230	1	Retrofit with (2) 14 Watt LED T8 4' Lamps and (1) Dimming Driver	32	0.032	119
PRESQUE ISLE	TOM RIDGE CENTER		INTERIOR	1	OFFICE	2	T5 2x2 2-Lamp FT40 Troffer Fixture with 40 Watt Biax Lamps	76	0.152	563	2	Retrofit with (2) 17 Watt LED FT40; Direct Wire to Socket	34	0.068	252
PRESQUE ISLE	TOM RIDGE CENTER		INTERIOR	1	STORAGE	4	T5 2x2 2-Lamp FT40 Troffer Fixture with 40 Watt Biax Lamps	76	0.304	304	4	Retrofit with (2) 17 Watt LED FT40; Direct Wire to Socket	34	0.136	136
PRESQUE ISLE	TOM RIDGE CENTER		INTERIOR	1	CONFERENCE	3	T5 2x2 2-Lamp FT40 Troffer Fixture with 40 Watt Biax Lamps	76	0.228	845	3	Retrofit with (2) 17 Watt LED FT40; Direct Wire to Socket	34	0.102	378
PRESQUE ISLE	TOM RIDGE CENTER		INTERIOR	1	CAFÉ	12	T8 1x4 4-Lamp Direct/Indirect Linear Fixture	106	1.272	4,711	12	Retrofit with (4) 12.5 Watt LED T8 4' Lamps; Direct Wire to Socket	50	0.600	2,222
PRESQUE ISLE	TOM RIDGE CENTER		INTERIOR	1	CAFÉ	5	42 Watt Plug-In CFL Cylinder Fixture	45	0.225	833	5	No Retrofit	45	0.225	833
PRESQUE ISLE	TOM RIDGE CENTER		INTERIOR	1	KITCHEN	10	T5 2x2 3-Lamp FT40 Troffer Fixture with 40 Watt Biax Lamps	114	1.140	4,223	10	No Retrofit	114	1.140	4,223
PRESQUE ISLE	TOM RIDGE CENTER		INTERIOR	1	KITCHEN	1	Existing LED Fixture; No Retrofit	30	0.030	111	1	No Retrofit	30	0.030	111
PRESQUE ISLE	TOM RIDGE CENTER		INTERIOR	1	CLOSET	1	T5 2x2 3-Lamp FT40 Troffer Fixture with 40 Watt Biax Lamps	114	0.114	114	1	No Retrofit	114	0.114	114
PRESQUE ISLE	TOM RIDGE CENTER		INTERIOR	1	CLOSET	1	Existing LED Fixture; No Retrofit	10	0.010	10	1	No Retrofit	10	0.010	10
PRESQUE ISLE	TOM RIDGE CENTER		INTERIOR	1	HALLWAY	21	26 Watt Plug-In CFL 2-Lamp 8" Downlight	58	1.218	4,511	21	No Retrofit	58	1.218	4,511
PRESQUE ISLE	TOM RIDGE CENTER		INTERIOR	1	SHOWCASE	1	Existing LED Fixture; No Retrofit	10	0.010	37	1	No Retrofit	10	0.010	37
PRESQUE ISLE	TOM RIDGE CENTER		INTERIOR	1	TOP OF SHOWCASE	4	T8 1x3 3-Lamp Strip Fixture; Difficult Access	82	0.328	1,215	4	Retrofit with (3) 12 Watt LED T8 3' Lamps; Direct Wire to Socket	36	0.144	533
PRESQUE ISLE	TOM RIDGE CENTER		INTERIOR	1	WOMENS RESTROOM	4	T5 2x2 2-Lamp FT40 Troffer Fixture with 40 Watt Biax Lamps	76	0.304	1,174	4	Retrofit with (2) 17 Watt LED FT40; Direct Wire to Socket	34	0.136	525
PRESQUE ISLE	TOM RIDGE CENTER		INTERIOR	1	WOMENS RESTROOM	1	Existing LED Fixture; No Retrofit	30	0.030	116	1	No Retrofit	30	0.030	116
PRESQUE ISLE	TOM RIDGE CENTER		INTERIOR	1	WOMENS RESTROOM	1	T8 1x3 3-Lamp Strip Fixture; Difficult Access	82	0.082	317	1	Retrofit with (3) 12 Watt LED T8 3' Lamps; Direct Wire to Socket	36	0.036	139
PRESQUE ISLE	TOM RIDGE CENTER		INTERIOR	1	MENS RESTROOM	5	Existing LED Fixture; No Retrofit	30	0.150	579	5	No Retrofit	30	0.150	579
PRESQUE ISLE	TOM RIDGE CENTER		INTERIOR	1	MENS RESTROOM	1	T8 1x3 3-Lamp Strip Fixture; Difficult Access	82	0.082	317	1	Retrofit with (3) 12 Watt LED T8 3' Lamps; Direct Wire to Socket	36	0.036	139
PRESQUE ISLE	TOM RIDGE CENTER		INTERIOR	1	FAMILY RESTROOM	1	T8 1x4 2-Lamp Strip Fixture; Difficult Access	49	0.049	189	1	Retrofit with (2) 12.5 Watt LED T8 4' Lamps; Direct Wire to Socket; Difficult Access	25	0.025	97
PRESQUE ISLE	TOM RIDGE CENTER		INTERIOR	1	MENS RESTROOM	1	Existing LED Fixture; No Retrofit	30	0.030	116	1	No Retrofit	30	0.030	116
PRESQUE ISLE	TOM RIDGE CENTER		INTERIOR	1	MENS RESTROOM	4	T5 2x2 2-Lamp FT40 Troffer Fixture with 40 Watt Biax Lamps	76	0.304	1,174	4	Retrofit with (2) 17 Watt LED FT40; Direct Wire to Socket	34	0.136	525
PRESQUE ISLE	TOM RIDGE CENTER		INTERIOR	1	LOCKER	1	T5 2x2 2-Lamp FT40 Troffer Fixture with 40 Watt Biax Lamps	76	0.076	282	1	Retrofit with (2) 17 Watt LED FT40; Direct Wire to Socket	34	0.034	126

©2013 Energy Systems Group, LLC

EXISTING FIXTURES												PROPOSED FIXTURE UPGRADE				
Park/Building Name	Building	Building #	Phase	Floor	Room Description	Qty	Description	Watts	kW	kWh	Qty	Description	Watts	kW	kWh
PRESQUE ISLE	TOM RIDGE CENTER		INTERIOR	1	LOCKER	1	T8 1x3 2-Lamp Strip Fixture; Difficult Access	49	0.049	181	1	Retrofit with (2) 12 Watt LED T8 3' Lamps; Direct Wire to Socket; Difficult Access	24	0.024	89
PRESQUE ISLE	TOM RIDGE CENTER		INTERIOR	1	SHOWER	1	26 Watt Plug-In CFL 2-Lamp Downlight Fixture	52	0.052	193	1	No Retrofit	52	0.052	193
PRESQUE ISLE	TOM RIDGE CENTER		INTERIOR	1	WOMENS RESTROOM	3	TT5 2x2 2-Lamp FT40 Troffer Fixture with 40 Watt Biax Lamps	76	0.228	881	3	Retrofit with (2) 17 Watt LED FT40; Direct Wire to Socket	34	0.102	394
PRESQUE ISLE	TOM RIDGE CENTER		INTERIOR	1	WOMENS RESTROOM	1	Existing LED Fixture; No Retrofit	30	0.030	116	1	No Retrofit	30	0.030	116
PRESQUE ISLE	TOM RIDGE CENTER		INTERIOR	1	LOCKER	1	Existing LED Fixture; No Retrofit	30	0.030	111	1	No Retrofit	30	0.030	111
PRESQUE ISLE	TOM RIDGE CENTER		INTERIOR	1	SHOWERS	1	T8 1x4 2-Lamp Vaporlight Fixture	62	0.062	230	1	Retrofit with (2) 12.5 Watt LED T8 4' Lamps; Direct Wire to Socket	25	0.025	93
PRESQUE ISLE	TOM RIDGE CENTER		INTERIOR	1	SHOWERS	1	26 Watt Plug-In CFL 2-Lamp 8" Downlight	58	0.058	215	1	No Retrofit	58	0.058	215
PRESQUE ISLE	TOM RIDGE CENTER		INTERIOR	1	RESTROOM HALL	1	T8 1x3 2-Lamp Strip Fixture; Difficult Access	49	0.049	189	1	Retrofit with (2) 12 Watt LED T8 3' Lamps; Direct Wire to Socket; Difficult Access	24	0.024	93
PRESQUE ISLE	TOM RIDGE CENTER		INTERIOR	1	RESTROOM HALL	1	T8 1x4 2-Lamp Strip Fixture; Difficult Access	49	0.049	189	1	Retrofit with (2) 12.5 Watt LED T8 4' Lamps; Direct Wire to Socket; Difficult Access	25	0.025	97
PRESQUE ISLE	TOM RIDGE CENTER		INTERIOR	1	VESTIBULE	2	26 Watt Plug-In CFL 2-Lamp 8" Downlight	58	0.116	430	2	No Retrofit	58	0.116	430
PRESQUE ISLE	TOM RIDGE CENTER		INTERIOR	1	JANITOR	1	Existing LED Fixture; No Retrofit	45	0.045	45	1	No Retrofit	45	0.045	45
PRESQUE ISLE	TOM RIDGE CENTER		INTERIOR	1	STAIRS	4	Existing LED Fixture; No Retrofit	15	0.060	526	4	No Retrofit	15	0.060	526
PRESQUE ISLE	TOM RIDGE CENTER		INTERIOR	1	CULTURE LAB	8	T8 1x4 2-Lamp Industrial Strip Fixture; Turret	62	0.496	1,837	8	New 1x4 2-Lamp Industrial Fixture with (2) 12.5 Watt LED T8 4' Lamp; Direct Wire to Socket	25	0.200	741
PRESQUE ISLE	TOM RIDGE CENTER		INTERIOR	1	CHEM LAB	11	T8 1x4 2-Lamp Industrial Strip Fixture; Turret	62	0.682	2,526	11	New 1x4 2-Lamp Industrial Fixture with (2) 12.5 Watt LED T8 4' Lamp; Direct Wire to Socket	25	0.275	1,019
PRESQUE ISLE	TOM RIDGE CENTER		INTERIOR	1	CHEM LAB	5	Existing LED Fixture; No Retrofit	30	0.150	556	5	No Retrofit	30	0.150	556
PRESQUE ISLE	TOM RIDGE CENTER		INTERIOR	1	STERILIZATION	2	T8 1x4 2-Lamp Industrial Strip Fixture; Turret	62	0.124	459	2	New 1x4 2-Lamp Industrial Fixture with (2) 12.5 Watt LED T8 4' Lamp; Direct Wire to Socket	25	0.050	185
PRESQUE ISLE	TOM RIDGE CENTER		INTERIOR	1	ELEVATOR ROOM	1	T8 1x4 3-Lamp Industrial Strip Fixture	84	0.084	311	1	Retrofit with (3) 12.5 Watt LED T8 4' Lamps; Direct Wire to Socket	37.5	0.038	139
PRESQUE ISLE	TOM RIDGE CENTER		INTERIOR	1	HOOD	2	T12 1x4 2-Lamp Strip Fixture	72	0.144	533	2	Retrofit with (2) 12.5 Watt LED T8 4' Lamps; Direct Wire to Socket	25	0.050	185
PRESQUE ISLE	TOM RIDGE CENTER		INTERIOR	1	INSTRUMENTATION OFFICE	12	TT5 2x2 2-Lamp FT40 Troffer Fixture with 40 Watt Biax Lamps	76	0.912	3,378	12	Retrofit with (2) 17 Watt LED FT40; Direct Wire to Socket	34	0.408	1,511
PRESQUE ISLE	TOM RIDGE CENTER		INTERIOR	1	MICROSCOPY	18	TT5 2x2 2-Lamp FT40 Troffer Fixture with 40 Watt Biax Lamps; Dimming	67	1.206	4,467	18	No Retrofit	67	1.206	4,467
PRESQUE ISLE	TOM RIDGE CENTER		INTERIOR	1	PLANT LAB	8	T8 1x4 2-Lamp Industrial Strip Fixture; Turret	62	0.496	1,837	8	New 1x4 2-Lamp Industrial Fixture with (2) 12.5 Watt LED T8 4' Lamp; Direct Wire to Socket	25	0.200	741
PRESQUE ISLE	TOM RIDGE CENTER		INTERIOR	1	GREEN HOUSE	2	42 Watt Plug-In CFL Wall Pack Fixture	45	0.090	333	2	No Retrofit	45	0.090	333
PRESQUE ISLE	TOM RIDGE CENTER		INTERIOR	1	AQUATIC LAB	11	T8 1x8 6-Lamp Vaporlight Fixture	168	1.848	6,845	11	Retrofit with (6) 12.5 Watt LED T8 4' Lamps; Direct Wire to Socket	75	0.825	3,066
PRESQUE ISLE	TOM RIDGE CENTER		INTERIOR	1	AQUATIC LAB	4	T8 1x8 4-Lamp Vaporlight Fixture	106	0.424	1,570	4	Retrofit with (4) 12.5 Watt LED T8 4' Lamps; Direct Wire to Socket	50	0.200	741
PRESQUE ISLE	TOM RIDGE CENTER		INTERIOR	1	SAMPLE PREP LAB	6	T8 1x4 2-Lamp Industrial Strip Fixture; Turret	62	0.372	1,378	6	New 1x4 2-Lamp Industrial Fixture with (2) 12.5 Watt LED T8 4' Lamp; Direct Wire to Socket	25	0.150	556
PRESQUE ISLE	TOM RIDGE CENTER		INTERIOR	1	HOOD	1	T12 1x4 2-Lamp Strip Fixture	72	0.072	267	1	Retrofit with (2) 12.5 Watt LED T8 4' Lamps; Direct Wire to Socket	25	0.025	93

©2013 Energy Systems Group, LLC

EXISTING FIXTURES												PROPOSED FIXTURE UPGRADE				
Park/Building Name	Building	Building #	Phase	Floor	Room Description	Qty	Description	Watts	kW	kWh	Qty	Description	Watts	kW	kWh
PRESQUE ISLE	TOM RIDGE CENTER		INTERIOR	1	COOLER	2	Existing LED Fixture; No Retrofit	30	0.060	60	2	No Retrofit	30	0.060	60
PRESQUE ISLE	TOM RIDGE CENTER		INTERIOR	1	ACCESS ROOM	3	Existing LED Fixture; No Retrofit	30	0.090	333	3	No Retrofit	30	0.090	333
PRESQUE ISLE	TOM RIDGE CENTER		INTERIOR	1	ACCESS ROOM	3	T8 1x4 2-Lamp Industrial Strip Fixture; Turret	62	0.186	689	3	New 1x4 2-Lamp Industrial Fixture with (2) 12.5 Watt LED T8 4' Lamp; Direct Wire to Socket	25	0.075	278
PRESQUE ISLE	TOM RIDGE CENTER		INTERIOR	1	ACCESS ROOM	2	T8 1x4 2-Lamp Industrial Strip Fixture; Turret	62	0.124	459	2	New 1x4 2-Lamp Industrial Fixture with (2) 12.5 Watt LED T8 4' Lamp; Direct Wire to Socket	25	0.050	185
PRESQUE ISLE	TOM RIDGE CENTER		INTERIOR	1	SHOWER	2	T8 2x3 1-Lamp Strip Fixture	30	0.060	222	2	Retrofit with (1) 12 Watt LED T8 3' Lamp; Direct Wire to Socket	12	0.024	89
PRESQUE ISLE	TOM RIDGE CENTER		INTERIOR	1	LAB HALL	8	26 Watt Plug-In CFL 2-Lamp 8" Downlight	58	0.464	1,719	8	No Retrofit	58	0.464	1,719
PRESQUE ISLE	TOM RIDGE CENTER		INTERIOR	2	ELEVATOR	6	Existing LED Fixture; No Retrofit	10	0.060	526	6	No Retrofit	10	0.060	526
PRESQUE ISLE	TOM RIDGE CENTER		INTERIOR	2	OFFICE	4	T5 2x2 2-Lamp FT40 Troffer Fixture with 40 Watt Biax Lamps	76	0.304	1,126	4	Retrofit with (2) 17 Watt LED FT40; Direct Wire to Socket	34	0.136	504
PRESQUE ISLE	TOM RIDGE CENTER		INTERIOR	2	OFFICE	2	T5 2x2 2-Lamp FT40 Troffer Fixture with 40 Watt Biax Lamps	76	0.152	563	2	Retrofit with (2) 17 Watt LED FT40; Direct Wire to Socket	34	0.068	252
PRESQUE ISLE	TOM RIDGE CENTER		INTERIOR	2	OFFICE	2	T5 2x2 2-Lamp FT40 Troffer Fixture with 40 Watt Biax Lamps	76	0.152	563	2	Retrofit with (2) 17 Watt LED FT40; Direct Wire to Socket	34	0.068	252
PRESQUE ISLE	TOM RIDGE CENTER		INTERIOR	2	OFFICE	6	T5 2x2 2-Lamp FT40 Troffer Fixture with 40 Watt Biax Lamps	76	0.456	1,689	6	Retrofit with (2) 17 Watt LED FT40; Direct Wire to Socket	34	0.204	756
PRESQUE ISLE	TOM RIDGE CENTER		INTERIOR	2	OFFICE	2	T5 2x2 2-Lamp FT40 Troffer Fixture with 40 Watt Biax Lamps	76	0.152	563	2	Retrofit with (2) 17 Watt LED FT40; Direct Wire to Socket	34	0.068	252
PRESQUE ISLE	TOM RIDGE CENTER		INTERIOR	2	OFFICE	2	T5 2x2 2-Lamp FT40 Troffer Fixture with 40 Watt Biax Lamps	76	0.152	563	2	Retrofit with (2) 17 Watt LED FT40; Direct Wire to Socket	34	0.068	252
PRESQUE ISLE	TOM RIDGE CENTER		INTERIOR	2	OFFICE	2	T5 2x2 2-Lamp FT40 Troffer Fixture with 40 Watt Biax Lamps	76	0.152	563	2	Retrofit with (2) 17 Watt LED FT40; Direct Wire to Socket	34	0.068	252
PRESQUE ISLE	TOM RIDGE CENTER		INTERIOR	2	LUNCH ROOM	8	T5 2x2 2-Lamp FT40 Troffer Fixture with 40 Watt Biax Lamps	76	0.608	2,252	8	Retrofit with (2) 17 Watt LED FT40; Direct Wire to Socket	34	0.272	1,007
PRESQUE ISLE	TOM RIDGE CENTER		INTERIOR	2	OFFICE	2	T5 2x2 2-Lamp FT40 Troffer Fixture with 40 Watt Biax Lamps	76	0.152	563	2	Retrofit with (2) 17 Watt LED FT40; Direct Wire to Socket	34	0.068	252
PRESQUE ISLE	TOM RIDGE CENTER		INTERIOR	2	OFFICE	4	T5 2x2 2-Lamp FT40 Troffer Fixture with 40 Watt Biax Lamps	76	0.304	1,126	4	Retrofit with (2) 17 Watt LED FT40; Direct Wire to Socket	34	0.136	504
PRESQUE ISLE	TOM RIDGE CENTER		INTERIOR	2	OFFICE	4	T5 2x2 2-Lamp FT40 Troffer Fixture with 40 Watt Biax Lamps	76	0.304	1,126	4	Retrofit with (2) 17 Watt LED FT40; Direct Wire to Socket	34	0.136	504
PRESQUE ISLE	TOM RIDGE CENTER		INTERIOR	2	ELECTRICAL	2	T5 2x2 2-Lamp FT40 Troffer Fixture with 40 Watt Biax Lamps	76	0.152	152	2	Retrofit with (2) 17 Watt LED FT40; Direct Wire to Socket	34	0.068	68
PRESQUE ISLE	TOM RIDGE CENTER		INTERIOR	2	COPY	6	T5 2x2 2-Lamp FT40 Troffer Fixture with 40 Watt Biax Lamps	76	0.456	1,689	6	Retrofit with (2) 17 Watt LED FT40; Direct Wire to Socket	34	0.204	756
PRESQUE ISLE	TOM RIDGE CENTER		INTERIOR	2	HALLWAY	19	Existing LED Fixture; No Retrofit	10	0.190	704	19	No Retrofit	10	0.190	704
PRESQUE ISLE	TOM RIDGE CENTER		INTERIOR	2	HALLWAY	3	3 Watt LED 2-Lamp Exit Sign	3	0.009	79	3	No Retrofit	3	0.009	79
PRESQUE ISLE	TOM RIDGE CENTER		INTERIOR	2	MENS RESTROOM	4	T5 2x2 2-Lamp FT40 Troffer Fixture with 40 Watt Biax Lamps	76	0.304	1,174	4	Retrofit with (2) 17 Watt LED FT40; Direct Wire to Socket	34	0.136	525
PRESQUE ISLE	TOM RIDGE CENTER		INTERIOR	2	MENS RESTROOM	1	T8 1x4 2-Lamp Strip Fixture; Difficult Access	49	0.049	189	1	Retrofit with (2) 12.5 Watt LED T8 4' Lamps; Direct Wire to Socket; Difficult Access	25	0.025	97
PRESQUE ISLE	TOM RIDGE CENTER		INTERIOR	2	WOMENS RESTROOM	4	T5 2x2 2-Lamp FT40 Troffer Fixture with 40 Watt Biax Lamps	76	0.304	1,174	4	Retrofit with (2) 17 Watt LED FT40; Direct Wire to Socket	34	0.136	525
PRESQUE ISLE	TOM RIDGE CENTER		INTERIOR	2	WOMENS RESTROOM	1	T8 1x4 2-Lamp Strip Fixture; Difficult Access	49	0.049	189	1	Retrofit with (2) 12.5 Watt LED T8 4' Lamps; Direct Wire to Socket; Difficult Access	25	0.025	97

©2013 Energy Systems Group, LLC

EXISTING FIXTURES												PROPOSED FIXTURE UPGRADE			
Park/Building Name	Building	Building #	Phase	Floor	Room Description	Qty	Description	Watts	kW	kWh	Qty	Description	Watts	kW	kWh
PRESQUE ISLE	TOM RIDGE CENTER		INTERIOR	2	OFFICE	4	TT5 2x2 2-Lamp FT40 Troffer Fixture with 40 Watt Biax Lamps	76	0.304	1,126	4	Retrofit with (2) 17 Watt LED FT40; Direct Wire to Socket	34	0.136	504
PRESQUE ISLE	TOM RIDGE CENTER		INTERIOR	2	OFFICE	2	TT5 2x2 2-Lamp FT40 Troffer Fixture with 40 Watt Biax Lamps	76	0.152	563	2	Retrofit with (2) 17 Watt LED FT40; Direct Wire to Socket	34	0.068	252
PRESQUE ISLE	TOM RIDGE CENTER		INTERIOR	2	OFFICE	2	TT5 2x2 2-Lamp FT40 Troffer Fixture with 40 Watt Biax Lamps	76	0.152	563	2	Retrofit with (2) 17 Watt LED FT40; Direct Wire to Socket	34	0.068	252
PRESQUE ISLE	TOM RIDGE CENTER		INTERIOR	2	OFFICE	4	TT5 2x2 2-Lamp FT40 Troffer Fixture with 40 Watt Biax Lamps	76	0.304	1,126	4	Retrofit with (2) 17 Watt LED FT40; Direct Wire to Socket	34	0.136	504
PRESQUE ISLE	TOM RIDGE CENTER		INTERIOR	2	OFFICE	4	TT5 2x2 2-Lamp FT40 Troffer Fixture with 40 Watt Biax Lamps	76	0.304	1,126	4	Retrofit with (2) 17 Watt LED FT40; Direct Wire to Socket	34	0.136	504
PRESQUE ISLE	TOM RIDGE CENTER		INTERIOR	2	COMMS CLOSET	2	TT5 2x2 2-Lamp FT40 Troffer Fixture with 40 Watt Biax Lamps	76	0.152	152	2	Retrofit with (2) 17 Watt LED FT40; Direct Wire to Socket	34	0.068	68
PRESQUE ISLE	TOM RIDGE CENTER		INTERIOR	2	HALLWAY	8	Existing LED Fixture; No Retrofit	10	0.080	296	8	No Retrofit	10	0.080	296
PRESQUE ISLE	TOM RIDGE CENTER		INTERIOR	2	CONFERENCE	8	26 Watt Plug-In CFL 2-Lamp 8" Downlight	58	0.464	1,719	8	No Retrofit	58	0.464	1,719
PRESQUE ISLE	TOM RIDGE CENTER		INTERIOR	2	CONFERENCE	5	T8 1x4 2-Lamp Direct/Indirect Linear Fixture	62	0.310	1,148	5	Retrofit with (2) 12.5 Watt LED T8 4' Lamps; Direct Wire to Socket	25	0.125	463
PRESQUE ISLE	TOM RIDGE CENTER		INTERIOR	2	LARGE OPEN CUBICLE	102	T8 1x4 2-Lamp Direct/Indirect Linear Fixture	62	6.324	23,424	102	Retrofit with (2) 12.5 Watt LED T8 4' Lamps; Direct Wire to Socket	25	2.550	9,445
PRESQUE ISLE	TOM RIDGE CENTER		INTERIOR	2	DESK	34	13 Watt Compact Fluorescent Fixture	13	0.442	1,637	34	Re-Lamp with (1) 10 Watt LED A19	10	0.340	1,259
PRESQUE ISLE	TOM RIDGE CENTER		INTERIOR	2	UPPER LEVEL OF MUSEUM	42	165 Watt Quartz Pole Red Fixture; No Retrofit	165	6.930	25,669	42	No Retrofit	165	6.930	25,669
PRESQUE ISLE	TOM RIDGE CENTER		INTERIOR	2	OVER INFO DESK	2	175 Watt Metal Halide Flood Fixture; T6 Lamp; Track	215	0.430	1,593	2	No Retrofit	215	0.430	1,593
PRESQUE ISLE	TOM RIDGE CENTER		INTERIOR	2	BIRDS THROUGH BINOCULARS	13	39 Watt Ceramic Metal Halide PAR20	50	0.650	2,408	13	No Retrofit	50	0.650	2,408
PRESQUE ISLE	TOM RIDGE CENTER		INTERIOR	2	MAGICAL HISTORY TOUR	27	39 Watt Ceramic Metal Halide PAR20	50	1.350	5,000	27	No Retrofit	50	1.350	5,000
PRESQUE ISLE	TOM RIDGE CENTER		INTERIOR	2	MAGICAL HISTORY TOUR	10	TT5 2x2 1-Lamp FT40 Troffer Fixture with 40 Watt Biax Lamp	38	0.380	1,408	10	No Retrofit	38	0.380	1,408
PRESQUE ISLE	TOM RIDGE CENTER		INTERIOR	2	MECHANICAL	1	T8 1x4 3-Lamp Industrial Strip Fixture	84	0.084	84	1	Retrofit with (3) 12.5 Watt LED T8 4' Lamps; Direct Wire to Socket	37.5	0.038	38
PRESQUE ISLE	TOM RIDGE CENTER		INTERIOR	2	TOP OF DISCOVERY ROOM	5	T5HO 1x4 1-Lamp Strip Fixture	62	0.310	1,148	5	No Retrofit	62	0.310	1,148
PRESQUE ISLE	TOM RIDGE CENTER		INTERIOR	2	OBSERVATION TOWER BRIDGE	4	50 Watt Incandescent MR16 Fixture	50	0.200	741	4	Re-Lamp with (1) 7 Watt LED MR16	7	0.028	104
PRESQUE ISLE	TOM RIDGE CENTER		INTERIOR	2	OBSERVATION ELEVATOR	9	Existing LED Fixture; No Retrofit	10	0.090	788	9	No Retrofit	10	0.090	788
PRESQUE ISLE	TOM RIDGE CENTER		INTERIOR	2	UPPER LEVEL TOWER	4	150 Watt Metal Halide Flood Fixture; Trunion	188	0.752	2,785	4	New 39 Watt LED Flood Fixture; Trunion	78	0.312	1,156
PRESQUE ISLE	TOM RIDGE CENTER		INTERIOR	2	UPPER LEVEL TOWER	1	26 Watt Plug-In CFL Jelly Jar	29	0.029	107	1	No Retrofit	29	0.029	107
PRESQUE ISLE	TOM RIDGE CENTER		INTERIOR	2	STAIRS	50	Existing LED Fixture; No Retrofit	20	1.000	8,760	50	No Retrofit	20	1.000	8,760
PRESQUE ISLE	TOM RIDGE CENTER		INTERIOR	2	STAIRS	3	T8 1x4 2-Lamp Wrap Fixture	62	0.186	1,629	3	Retrofit with (2) 12.5 Watt LED T8 4' Lamps; Direct Wire to Socket	25	0.075	657
PRESQUE ISLE	TOM RIDGE CENTER		INTERIOR	2	STAIRS	1	T12HO 1x8 3-Lamp Industrial Strip Fixture; Turret	355	0.355	3,110	1	New 1x8 6-Lamp Industrial Strip Fixture with (6) 12.5 Watt LED T8 4' Lamps; Direct Wire to Socket	75	0.075	657
PRESQUE ISLE	TOM RIDGE CENTER		EXTERIOR	2	TOWER BALCONY	4	70 Watt Metal Halide Wall Pack Fixture; Silver	95	0.380	1,664	4	New 24 Watt LED Wall Pack Fixture; Non-Dark Sky; Difficult Access	24	0.096	420

©2013 Energy Systems Group, LLC

EXISTING FIXTURES										PROPOSED FIXTURE UPGRADE				
Park/Building Name	Building	Building #	Phase	Floor	Room Description	Qty	Description	Watts	kW	kWh	Qty	Description	Watts	kW	kWh
PRESQUE ISLE	TOM RIDGE CENTER		EXTERIOR		EXTERIOR FRONT	1	26 Watt Plug-In CFL 2-Lamp 8" Downlight	58	0.058	254	1	Retrofit with 13 Watt LED 6" Downlight Kit	13	0.013	57
PRESQUE ISLE	TOM RIDGE CENTER		EXTERIOR		EXTERIOR FRONT	2	42 Watt Plug-In CFL China Fixture; Wall Mount; Silver	45	0.090	394	2	No Retrofit	45	0.090	394
PRESQUE ISLE	TOM RIDGE CENTER		EXTERIOR		EXTERIOR FRONT	1	42 Watt Plug-In CFL Wall Pack Fixture	45	0.045	197	1	New 24 Watt LED Wall Pack Fixture; Non-Dark Sky	25	0.025	110
PRESQUE ISLE	TOM RIDGE CENTER		EXTERIOR		EXTERIOR LEFT	2	42 Watt Plug-In CFL China Fixture; Wall Mount; Silver	45	0.090	394	2	No Retrofit	45	0.090	394
PRESQUE ISLE	TOM RIDGE CENTER		EXTERIOR		EXTERIOR BACK AIR HANDLER	4	150 Watt Metal Halide Wall Pack Fixture	180	0.720	3,154	4	New 37 Watt LED Wall Pack Fixture; Non-Dark Sky	39	0.156	683
PRESQUE ISLE	TOM RIDGE CENTER		EXTERIOR		EXTERIOR BACK AIR HANDLER	4	42 Watt Plug-In CFL China Fixture; Wall Mount; Silver	45	0.180	788	4	No Retrofit	45	0.180	788
PRESQUE ISLE	TOM RIDGE CENTER		EXTERIOR		EXTERIOR BACK AIR HANDLER	1	42 Watt Plug-In CFL Wall Pack Fixture	45	0.045	197	1	New 24 Watt LED Wall Pack Fixture; Non-Dark Sky	25	0.025	110
PRESQUE ISLE	TOM RIDGE CENTER		EXTERIOR		EXTERIOR RIGHT	3	42 Watt Plug-In CFL China Fixture; Wall Mount; Silver	45	0.135	591	3	No Retrofit	45	0.135	591
PRESQUE ISLE	TOM RIDGE CENTER		EXTERIOR		STAIRS	2	100 Watt Metal Halide Cylinder Fixture	125	0.250	1,095	2	New 40 Watt LED Cylinder Fixture	40	0.080	350
PRESQUE ISLE	TOM RIDGE CENTER		EXTERIOR		CANOPY	2	100 Watt Metal Halide Cylinder Fixture	125	0.250	1,095	2	New 40 Watt LED Cylinder Fixture	40	0.080	350
PRESQUE ISLE	TOM RIDGE CENTER		EXTERIOR		PAVILION	1	Existing LED Fixture; No Retrofit	40	0.040	175	1	No Retrofit	40	0.040	175
PRESQUE ISLE	TOM RIDGE CENTER		INTERIOR		STORAGE	4	T8 1x4 2-Lamp Industrial Strip Fixture	62	0.248	248	4	Retrofit with (2) 12.5 Watt LED T8 4' Lamps; Direct Wire to Socket	25	0.100	100
PRESQUE ISLE	TOM RIDGE CENTER		INTERIOR		ORIENTATION THEATER	2	Existing LED Fixture; No Retrofit	20	0.040	148	2	No Retrofit	20	0.040	148
PRESQUE ISLE	TOM RIDGE CENTER		INTERIOR		ORIENTATION THEATER	1	65 Watt Incandescent R30 Downlight Fixture	65	0.065	241	1	Re-Lamp with (1) 10 Watt LED BR30	10	0.010	37
PRESQUE ISLE	TOM RIDGE CENTER		INTERIOR		ORIENTATION THEATER	4	Existing LED Fixture; No Retrofit	20	0.080	296	4	No Retrofit	20	0.080	296
PRESQUE ISLE	TOM RIDGE CENTER		INTERIOR		BACK PANEL	20	Existing LED Fixture; No Retrofit	20	0.400	1,482	20	No Retrofit	20	0.400	1,482
PRESQUE ISLE	TOM RIDGE CENTER		INTERIOR		BACK PANEL	1	75 Watt Incandescent PAR38	75	0.075	278	1	Re-Lamp with (1) 17 Watt LED PAR38	17	0.017	63
PRESQUE ISLE	TOM RIDGE CENTER		INTERIOR		PROJECTOR ROOM	1	75 Watt Incandescent PAR38	75	0.075	278	1	Re-Lamp with (1) 17 Watt LED PAR38	17	0.017	63

©2013 Energy Systems Group, LLC

BUILDING ENVELOPE

LINE BY LINE SURVEY

©2013 Energy Systems Group, LLC

PA STATE PARKS (CLEAR CREEK FORESTRY #8)
DETAILED SCOPE OF WORK

Existing Condition	QTY	UOM	Proposed Improvement
ENTRY DOOR MAINTENANCE NEEDED.	14	EACH	PERFORM ENTRY DOOR MAINTENANCE
WORN OUT ENTRY DOOR WEATHERSTRIPPING	11	EACH	REPAIR/REPLACE WEATHERSTRIP ON ENTRY DOORS
WORN OUT ENTRY DOOR SWEEP	11	EACH	INSTALL SWEEPS ON ENTRY DOORS
WORN OUT INTERIOR DOOR WEATHERSTRIP	3	EACH	WEATHERSTRIP INTERIOR DOORS WHICH COMPARTMENTALIZE FLOORS, MECHANICAL ROOM AND ACCESS TO UNCONDITIONED AREAS
WORN OUT INTERIOR DOOR SWEEPS	3	EACH	INSTALL SWEEPS ON INTERIOR DOORS WHICH COMPARTMENTALIZE FLOORS, MECHANICAL ROOM AND ACCESS TO UNCONDITIONED AREAS
WORN OUT GARAGE DOOR WEATHERSTRIP	5	LN FT.	REPLACE GARAGE DOOR WEATHERSTRIPPING
MISSING OR AGED BLOWN-IN INSULATION	800	EACH	RAISE R-VALUES USING BLOWN-IN OR LOOSE FILL INSULATION

©2013 Energy Systems Group, LLC

	EXISTING CONDITIONS									PROPOSED UPGRADE
BLD	QTY	Length (Ft)	Crack Width (in)	Crack Depth (in)	Total Area	Total Square Inches	CFM	BTU Loss	kWh Loss	Description
Maintenance (#8 CLEAR CREEK FORESTRY)	2	20	1/32	1	0.01	1.25	1.56	54.6	3	PERFORM ENTRY DOOR MAINTENANCE
Maintenance (#8 CLEAR CREEK FORESTRY)	2	3	1/6	1	0.01	1.00	1.25	43.7	2	INSTALL SWEEPS ON ENTRY DOORS
Maintenance (#8 CLEAR CREEK FORESTRY)	2	17	1/8	1	0.03	4.25	5.31	185.5	10	REPAIR/REPLACE WEATHERSTRIP ON ENTRY DOORS
Maintenance (#8 CLEAR CREEK FORESTRY)	2	30	1/4	1	0.10	15.00	18.73	654.8	36	REPLACE GARAGE DOOR WEATHERSTRIPPING
Carpenter Shop (#8 CLEAR CREEK FORESTRY)	2	20	1/32	1	0.01	1.25	1.37	47.8	3	PERFORM ENTRY DOOR MAINTENANCE
Carpenter Shop (#8 CLEAR CREEK FORESTRY)	1	3	1/6	1	0.00	0.50	0.55	19.1	1	INSTALL SWEEPS ON ENTRY DOORS
Carpenter Shop (#8 CLEAR CREEK FORESTRY)	1	17	1/8	1	0.01	2.12	2.32	81.3	5	REPAIR/REPLACE WEATHERSTRIP ON ENTRY DOORS
Carpenter Shop (#8 CLEAR CREEK FORESTRY)	1	3	1/6	1	0.00	0.50	0.55	19.1	1	INSTALL SWEEPS ON INTERIOR DOORS WHICH COMPARTMENTALIZE FLOORS, MECHANICAL ROOM AND ACCESS TO UNCONDITIONED AREAS
Carpenter Shop (#8 CLEAR CREEK FORESTRY)	1	17	1/8	1	0.01	2.12	2.32	81.3	5	WEATHERSTRIP INTERIOR DOORS WHICH COMPARTMENTALIZE FLOORS, MECHANICAL ROOM AND ACCESS TO UNCONDITIONED AREAS
Carpenter Shop (#8 CLEAR CREEK FORESTRY)	1	30	1/4	1	0.05	7.50	8.20	286.9	16	REPLACE GARAGE DOOR WEATHERSTRIPPING
Office (#8 CLEAR CREEK FORESTRY)	5	20	1/32	1	0.02	3.12	3.42	119.5	7	PERFORM ENTRY DOOR MAINTENANCE
Office (#8 CLEAR CREEK FORESTRY)	4	3	1/6	1	0.01	2.00	2.19	76.5	4	INSTALL SWEEPS ON ENTRY DOORS
Office (#8 CLEAR CREEK FORESTRY)	4	17	1/8	1	0.06	8.50	9.30	325.1	18	REPAIR/REPLACE WEATHERSTRIP ON ENTRY DOORS
Office (#8 CLEAR CREEK FORESTRY)	1	3	1/6	1	0.00	0.50	0.55	19.1	1	INSTALL SWEEPS ON INTERIOR DOORS WHICH COMPARTMENTALIZE FLOORS, MECHANICAL ROOM AND ACCESS TO UNCONDITIONED AREAS
Office (#8 CLEAR CREEK FORESTRY)	1	17	1/8	1	0.01	2.12	2.32	81.3	5	WEATHERSTRIP INTERIOR DOORS WHICH COMPARTMENTALIZE FLOORS, MECHANICAL ROOM AND ACCESS TO UNCONDITIONED AREAS
Office (#8 CLEAR CREEK FORESTRY)	1	30	1/4	1	0.05	7.50	8.20	286.9	16	REPLACE GARAGE DOOR WEATHERSTRIPPING
Office Shop (#8 CLEAR CREEK FORESTRY)	5	20	1/32	1	0.02	3.12	3.90	136.4	8	PERFORM ENTRY DOOR MAINTENANCE
Office Shop (#8 CLEAR CREEK FORESTRY)	4	3	1/6	1	0.01	2.00	2.50	87.3	5	INSTALL SWEEPS ON ENTRY DOORS

©2013 Energy Systems Group, LLC

Office Shop (#8 CLEAR CREEK FORESTRY)	4	17	1/8	1	0.06	8.50	10.61	371.0	21	REPAIR/REPLACE WEATHERSTRIP ON ENTRY DOORS
Office Shop (#8 CLEAR CREEK FORESTRY)	1	3	1/6	1	0.00	0.50	0.62	21.8	1	INSTALL SWEEPS ON INTERIOR DOORS WHICH COMPARTMENTALIZE FLOORS, MECHANICAL ROOM AND ACCESS TO UNCONDITIONED AREAS
Office Shop (#8 CLEAR CREEK FORESTRY)	1	17	1/8	1	0.01	2.12	2.65	92.8	5	WEATHERSTRIP INTERIOR DOORS WHICH COMPARTMENTALIZE FLOORS, MECHANICAL ROOM AND ACCESS TO UNCONDITIONED AREAS
Office Shop (#8 CLEAR CREEK FORESTRY)	1	30	1/4	1	0.05	7.50	9.36	327.4	18	REPLACE GARAGE DOOR WEATHERSTRIPPING

©2013 Energy Systems Group, LLC

Insulation Line by Line

BLD	Sq Ft Needed	EXISTING CONDITIONS					PROPOSED UPGRADE				SAVINGS	
		Existing R Value	Proposed R Value	Description	Current Heating MMBTU's	Current Cooling MMBTU's	Description	Proposed Heating MMBTU's	Proposed Cooling MMBTU's	Notes	Heat Savings in Therms	Cooling Savings in kWh
Office (#8 CLEAR CREEK FORESTRY)	800	14.00	42.00	MISSING OR AGED BLOWN-IN INSULATION	8.15	0.76	RAISE R-VALUES USING BLOWN-IN OR LOOSE FILL INSULATION	2.72	0.25	ATTIC	63.96	-

PA STATE PARKS (CLEAR CREEK)
DETAILED SCOPE OF WORK

Existing Condition	QTY	UOM	Proposed Improvement
ENTRY DOOR MAINTENANCE NEEDED.	56	EACH	PERFORM ENTRY DOOR MAINTENANCE
WORN OUT ENTRY DOOR WEATHERSTRIPPING	49	EACH	REPAIR/REPLACE WEATHERSTRIP ON ENTRY DOORS
WORN OUT ENTRY DOOR SWEEP	49	EACH	INSTALL SWEEPS ON ENTRY DOORS
WORN OUT INTERIOR DOOR WEATHERSTRIP	1	EACH	WEATHERSTRIP INTERIOR DOORS WHICH COMPARTMENTALIZE FLOORS, MECHANICAL ROOM AND ACCESS TO UNCONDITIONED AREAS
WORN OUT INTERIOR DOOR SWEEPS	1	EACH	INSTALL SWEEPS ON INTERIOR DOORS WHICH COMPARTMENTALIZE FLOORS, MECHANICAL ROOM AND ACCESS TO UNCONDITIONED AREAS
WORN OUT DOUBLE DOOR WEATHERSTRIPPING	1	LN FT.	REPAIR/REPLACE WEATHERSTRIP ON DOUBLE DOORS
WORN OUT DOUBLE DOOR SWEEP	1	EACH	INSTALL SWEEPS ON DOUBLE DOORS
WORN OUT GARAGE DOOR WEATHERSTRIP	1	LN FT.	REPLACE GARAGE DOOR WEATHERSTRIPPING
UNSEALED ATTIC/ROOF HATCH	1	LN FT.	REPAIR/REPLACE WEATHERSTRIP ON ATTIC/ROOF HATCH
MISSING OR WORN AIR CONDITIONER SEALING	1	SQ FT.	SEAL GAPS AROUND WINDOW AIR CONDITIONER
MISSING OR AGED BLOWN-IN INSULATION	1325	EACH	RAISE R-VALUES USING BLOWN-IN OR LOOSE FILL INSULATION
WINDOWS THERMAL PANELS	0	EACH	INSTALL THERMAL PANEL INTO SECTION OF NEW WINDOW
UNINSULATED 1/2 INCH COPPER PIPE	0	EACH	INSTALL NEW 1/2 INCH PIPE INSULATION

©2013 Energy Systems Group, LLC

Weatherization Line by Line

	EXISTING CONDITIONS									PROPOSED UPGRADE
BLD	QTY	Length (Ft)	Crack Width (in)	Crack Depth (in)	Total Area	Total Square Inches	CFM	BTU Loss	kWh Loss	Description
Maintenance (CLEAR CREEK)	5	20	1/32	1	0.02	3.12	3.42	119.5	13	PERFORM ENTRY DOOR MAINTENANCE
Maintenance (CLEAR CREEK)	4	3	1/6	1	0.01	2.00	2.19	76.5	8	INSTALL SWEEPS ON ENTRY DOORS
Maintenance (CLEAR CREEK)	4	17	1/8	1	0.06	8.50	9.30	325.1	34	REPAIR/REPLACE WEATHERSTRIP ON ENTRY DOORS
Maintenance (CLEAR CREEK)	1	30	1/4	1	0.05	7.50	8.20	286.9	30	REPLACE GARAGE DOOR WEATHERSTRIPPING
Maintenance (CLEAR CREEK)	1	6	1/4	1	0.01	1.50	1.64	57.4	6	SEAL GAPS AROUND WINDOW AIR CONDITIONER
Nature Center (CLEAR CREEK)	4	20	1/32	1	0.02	2.50	2.73	95.6	10	PERFORM ENTRY DOOR MAINTENANCE
Nature Center (CLEAR CREEK)	2	3	1/6	1	0.01	1.00	1.09	38.3	4	INSTALL SWEEPS ON ENTRY DOORS
Nature Center (CLEAR CREEK)	2	17	1/8	1	0.03	4.25	4.65	162.6	17	REPAIR/REPLACE WEATHERSTRIP ON ENTRY DOORS
Nature Center (CLEAR CREEK)	1	10	1/4	1	0.02	2.50	2.73	95.6	10	REPAIR/REPLACE WEATHERSTRIP ON ATTIC/ROOF HATCH
Small Cabins Type A 4 (CLEAR CREEK)	8	20	1/32	1	0.03	5.00	4.85	169.7	18	PERFORM ENTRY DOOR MAINTENANCE
Small Cabins Type A 4 (CLEAR CREEK)	8	3	1/6	1	0.03	4.00	3.88	135.7	14	INSTALL SWEEPS ON ENTRY DOORS
Small Cabins Type A 4 (CLEAR CREEK)	8	17	1/8	1	0.12	17.00	16.50	576.9	61	REPAIR/REPLACE WEATHERSTRIP ON ENTRY DOORS
Small Cabins Type B 6 (CLEAR CREEK)	6	20	1/32	1	0.03	3.75	3.64	127.2	13	PERFORM ENTRY DOOR MAINTENANCE
Small Cabins Type B 6 (CLEAR CREEK)	6	3	1/6	1	0.02	3.00	2.91	101.8	11	INSTALL SWEEPS ON ENTRY DOORS
Small Cabins Type B 6 (CLEAR CREEK)	6	17	1/8	1	0.09	12.75	12.37	432.6	46	REPAIR/REPLACE WEATHERSTRIP ON ENTRY DOORS
Small Cabin Showerhouse (CLEAR CREEK)	5	20	1/32	1	0.02	3.12	3.42	119.5	13	PERFORM ENTRY DOOR MAINTENANCE
Small Cabin Showerhouse (CLEAR CREEK)	4	3	1/6	1	0.01	2.00	2.19	76.5	8	INSTALL SWEEPS ON ENTRY DOORS
Small Cabin Showerhouse (CLEAR CREEK)	4	17	1/8	1	0.06	8.50	9.30	325.1	34	REPAIR/REPLACE WEATHERSTRIP ON ENTRY DOORS

©2013 Energy Systems Group, LLC

Small Cabin Showerhouse (CLEAR CREEK)	1	3	1/6	1	0.00	0.50	0.55	19.1	2	INSTALL SWEEPS ON INTERIOR DOORS WHICH COMPARTMENTALIZE FLOORS, MECHANICAL ROOM AND ACCESS TO UNCONDITIONED AREAS
Small Cabin Showerhouse (CLEAR CREEK)	1	17	1/8	1	0.01	2.12	2.32	81.3	9	WEATHERSTRIP INTERIOR DOORS WHICH COMPARTMENTALIZE FLOORS, MECHANICAL ROOM AND ACCESS TO UNCONDITIONED AREAS
Camp Ground Showerhouse (CLEAR CREEK)	5	20	1/32	1	0.02	3.12	3.42	119.5	13	PERFORM ENTRY DOOR MAINTENANCE
Camp Ground Showerhouse (CLEAR CREEK)	4	3	1/6	1	0.01	2.00	2.19	76.5	8	INSTALL SWEEPS ON ENTRY DOORS
Camp Ground Showerhouse (CLEAR CREEK)	4	17	1/8	1	0.06	8.50	9.30	325.1	34	REPAIR/REPLACE WEATHERSTRIP ON ENTRY DOORS
Large Cabin Showerhouse (CLEAR CREEK)	4	20	1/32	1	0.02	2.50	2.43	84.8	9	PERFORM ENTRY DOOR MAINTENANCE
Large Cabin Showerhouse (CLEAR CREEK)	4	3	1/6	1	0.01	2.00	1.94	67.9	7	INSTALL SWEEPS ON ENTRY DOORS
Large Cabin Showerhouse (CLEAR CREEK)	4	17	1/8	1	0.06	8.50	8.25	288.4	30	REPAIR/REPLACE WEATHERSTRIP ON ENTRY DOORS
Water Treatment (CLEAR CREEK)	2	20	1/32	1	0.01	1.25	1.37	47.8	5	PERFORM ENTRY DOOR MAINTENANCE
Water Treatment (CLEAR CREEK)	1	6	1/6	1	0.01	1.00	1.09	38.3	4	INSTALL SWEEPS ON DOUBLE DOORS
Water Treatment (CLEAR CREEK)	1	20	1/8	1	0.02	2.50	2.73	95.6	10	REPAIR/REPLACE WEATHERSTRIP ON DOUBLE DOORS
Large Cabins 12 (CLEAR CREEK)	12	20	1/32	1	0.05	7.50	8.20	286.9	30	PERFORM ENTRY DOOR MAINTENANCE
Large Cabins 12 (CLEAR CREEK)	12	3	1/6	1	0.04	6.00	6.56	229.5	24	INSTALL SWEEPS ON ENTRY DOORS
Large Cabins 12 (CLEAR CREEK)	12	17	1/8	1	0.18	25.50	27.90	975.4	103	REPAIR/REPLACE WEATHERSTRIP ON ENTRY DOORS
Park Office (CLEAR CREEK)	2	20	1/32	1	0.01	1.25	1.37	47.8	5	PERFORM ENTRY DOOR MAINTENANCE
Park Office (CLEAR CREEK)	2	3	1/6	1	0.01	1.00	1.09	38.3	4	INSTALL SWEEPS ON ENTRY DOORS
Park Office (CLEAR CREEK)	2	17	1/8	1	0.03	4.25	4.65	162.6	17	REPAIR/REPLACE WEATHERSTRIP ON ENTRY DOORS
Residence-Across From Park Office (CLEAR CREEK)	3	20	1/32	1	0.01	1.87	2.05	71.7	8	PERFORM ENTRY DOOR MAINTENANCE
Residence-Across From Park Office (CLEAR CREEK)	3	3	1/6	1	0.01	1.50	1.64	57.4	6	INSTALL SWEEPS ON ENTRY DOORS

©2013 Energy Systems Group, LLC

Weatherization Line by Line

Residence-Across From Park Office (CLEAR CREEK)	3	17	1/8	1	0.04	6.37	6.97	243.9	26	REPAIR/REPLACE WEATHERSTRIP ON ENTRY DOORS

©2013 Energy Systems Group, LLC

Insulation Line by Line

EXISTING CONDITIONS							PROPOSED UPGRADE				SAVINGS	
BLD	Sq Ft Needed	Existing R Value	Proposed R Value	Description	Current Heating MMBTU's	Current Cooling MMBTU's	Description	Proposed Heating MMBTU's	Proposed Cooling MMBTU's	Notes	Heat Savings in Therms	Cooling Savings in kWh
Nature Center (CLEAR CREEK)	875	14.00	42.00	MISSING OR AGED BLOWN-IN INSULATION	7.91	1.58	RAISE R-VALUES USING BLOWN-IN OR LOOSE FILL INSULATION	2.64	0.53	ATTIC	65.95	109.63
Park Office (CLEAR CREEK)	450	14.00	42.00	MISSING OR AGED BLOWN-IN INSULATION	4.07	0.81	RAISE R-VALUES USING BLOWN-IN OR LOOSE FILL INSULATION	1.36	0.27	ATTIC	33.92	56.38

©2013 Energy Systems Group, LLC

PA STATE PARKS (CORNPLANTER FORESTRY #14)
DETAILED SCOPE OF WORK

Existing Condition	QTY	UOM	Proposed Improvement
ENTRY DOOR MAINTENANCE NEEDED.	13	EACH	PERFORM ENTRY DOOR MAINTENANCE
WORN OUT ENTRY DOOR WEATHERSTRIPPING	10	EACH	REPAIR/REPLACE WEATHERSTRIP ON ENTRY DOORS
WORN OUT ENTRY DOOR SWEEP	10	EACH	INSTALL SWEEPS ON ENTRY DOORS
WORN OUT INTERIOR DOOR WEATHERSTRIP	4	EACH	WEATHERSTRIP INTERIOR DOORS WHICH COMPARTMENTALIZE FLOORS, MECHANICAL ROOM AND ACCESS TO UNCONDITIONED AREAS
WORN OUT INTERIOR DOOR SWEEPS	4	EACH	INSTALL SWEEPS ON INTERIOR DOORS WHICH COMPARTMENTALIZE FLOORS, MECHANICAL ROOM AND ACCESS TO UNCONDITIONED AREAS
WORN OUT GARAGE DOOR WEATHERSTRIP	5	LN FT.	REPLACE GARAGE DOOR WEATHERSTRIPPING

©2013 Energy Systems Group, LLC

Weatherization Line by Line

	EXISTING CONDITIONS									PROPOSED UPGRADE
BLD	QTY	Length (Ft)	Crack Width (in)	Crack Depth (in)	Total Area	Total Square Inches	CFM	BTU Loss	kWh Loss	Description
Warren Office (CORNPLANTER)	6	20	1/32	1	0.03	3.75	4.40	183.8	9	PERFORM ENTRY DOOR MAINTENANCE
Warren Office (CORNPLANTER)	4	3	1/6	1	0.01	2.00	2.35	98.0	5	INSTALL SWEEPS ON ENTRY DOORS
Warren Office (CORNPLANTER)	4	17	1/8	1	0.06	8.50	9.98	416.5	20	REPAIR/REPLACE WEATHERSTRIP ON ENTRY DOORS
Warren Office (CORNPLANTER)	2	3	1/6	1	0.01	1.00	1.17	49.0	2	INSTALL SWEEPS ON INTERIOR DOORS WHICH COMPARTMENTALIZE FLOORS, MECHANICAL ROOM AND ACCESS TO UNCONDITIONED AREAS
Warren Office (CORNPLANTER)	2	17	1/8	1	0.03	4.25	4.99	208.3	10	WEATHERSTRIP INTERIOR DOORS WHICH COMPARTMENTALIZE FLOORS, MECHANICAL ROOM AND ACCESS TO UNCONDITIONED AREAS
Warren Shop (CORNPLANTER)	2	20	1/32	1	0.01	1.25	1.47	61.3	3	PERFORM ENTRY DOOR MAINTENANCE
Warren Shop (CORNPLANTER)	2	3	1/6	1	0.01	1.00	1.17	49.0	2	INSTALL SWEEPS ON ENTRY DOORS
Warren Shop (CORNPLANTER)	2	17	1/8	1	0.03	4.25	4.99	208.3	10	REPAIR/REPLACE WEATHERSTRIP ON ENTRY DOORS
Warren Shop (CORNPLANTER)	1	42	1/4	1	0.07	10.50	12.33	514.5	25	REPLACE GARAGE DOOR WEATHERSTRIPPING
Warren Garage (CORNPLANTER)	2	20	1/32	1	0.01	1.25	1.47	61.3	3	PERFORM ENTRY DOOR MAINTENANCE
Warren Garage (CORNPLANTER)	2	3	1/6	1	0.01	1.00	1.17	49.0	2	INSTALL SWEEPS ON ENTRY DOORS
Warren Garage (CORNPLANTER)	2	17	1/8	1	0.03	4.25	4.99	208.3	10	REPAIR/REPLACE WEATHERSTRIP ON ENTRY DOORS
Warren Garage (CORNPLANTER)	2	42	1/4	1	0.15	21.00	24.66	1029.1	50	REPLACE GARAGE DOOR WEATHERSTRIPPING
Hunter Run Office (CORNPLANTER)	3	20	1/32	1	0.01	1.87	1.60	66.8	3	PERFORM ENTRY DOOR MAINTENANCE
Hunter Run Office (CORNPLANTER)	2	3	1/6	1	0.01	1.00	0.85	35.6	2	INSTALL SWEEPS ON ENTRY DOORS
Hunter Run Office (CORNPLANTER)	2	17	1/8	1	0.03	4.25	3.63	151.5	7	REPAIR/REPLACE WEATHERSTRIP ON ENTRY DOORS
Hunter Run Office (CORNPLANTER)	2	3	1/6	1	0.01	1.00	0.85	35.6	2	INSTALL SWEEPS ON INTERIOR DOORS WHICH COMPARTMENTALIZE FLOORS, MECHANICAL ROOM AND ACCESS TO UNCONDITIONED AREAS
Hunter Run Office (CORNPLANTER)	2	17	1/8	1	0.03	4.25	3.63	151.5	7	WEATHERSTRIP INTERIOR DOORS WHICH COMPARTMENTALIZE FLOORS, MECHANICAL ROOM AND ACCESS TO UNCONDITIONED AREAS

©2013 Energy Systems Group, LLC

Weatherization Line by Line

Hunter Run Office (CORNPLANTER)	2	30	1/4	1	0.10	15.00	12.81	534.7	25	REPLACE GARAGE DOOR WEATHERSTRIPPING

©2013 Energy Systems Group, LLC

PA STATE PARKS (FORBES FORESTRY #4)
DETAILED SCOPE OF WORK

Existing Condition	QTY	UOM	Proposed Improvement
BLOWER DOOR PRE/POST TESTS NEEDED FOR M&V	1	EACH	PROVIDE A PRE-BLOWER DOOR TEST TO ESTABLISH A BASELINE FOR AIR SEALING
ENTRY DOOR MAINTENANCE NEEDED.	20	EACH	PERFORM ENTRY DOOR MAINTENANCE
WORN OUT ENTRY DOOR WEATHERSTRIPPING	19	EACH	REPAIR/REPLACE WEATHERSTRIP ON ENTRY DOORS
WORN OUT ENTRY DOOR SWEEP	19	EACH	INSTALL SWEEPS ON ENTRY DOORS
WORN OUT INTERIOR DOOR WEATHERSTRIP	1	EACH	WEATHERSTRIP INTERIOR DOORS WHICH COMPARTMENTALIZE FLOORS, MECHANICAL ROOM AND ACCESS TO UNCONDITIONED AREAS
WORN OUT INTERIOR DOOR SWEEPS	1	EACH	INSTALL SWEEPS ON INTERIOR DOORS WHICH COMPARTMENTALIZE FLOORS, MECHANICAL ROOM AND ACCESS TO UNCONDITIONED AREAS
WORN OUT GARAGE DOOR WEATHERSTRIP	15	LN FT.	REPLACE GARAGE DOOR WEATHERSTRIPPING
UNSEALED ATTIC/ROOF HATCH	1	LN FT.	REPAIR/REPLACE WEATHERSTRIP ON ATTIC/ROOF HATCH
EXISTING ROOF WALL GAPS - INTERIOR	540	SQ FT.	SEAL INTERIOR ROOF/WALL INTERSECTION
MISSING OR AGED BLOWN-IN INSULATION	1775	EACH	RAISE R-VALUES USING BLOWN-IN OR LOOSE FILL INSULATION

©2013 Energy Systems Group, LLC

Weatherization Line by Line

	EXISTING CONDITIONS									PROPOSED UPGRADE
BLD	QTY	Length (Ft)	Crack Width (in)	Crack Depth (in)	Total Area	Total Square Inches	CFM	BTU Loss	kWh Loss	Description
Office (FORBES FORESTRY 4)	8	20	1/16	1	0.07	10.00	10.37	441.5	46	PERFORM ENTRY DOOR MAINTENANCE
Office (FORBES FORESTRY 4)	8	3	1/6	1	0.03	4.00	4.15	176.6	19	INSTALL SWEEPS ON ENTRY DOORS
Office (FORBES FORESTRY 4)	8	17	1/8	1	0.12	17.00	17.64	750.6	79	REPAIR/REPLACE WEATHERSTRIP ON ENTRY DOORS
Office (FORBES FORESTRY 4)	2	36	1/4	1	0.12	18.00	18.67	794.8	84	REPLACE GARAGE DOOR WEATHERSTRIPPING
Office (FORBES FORESTRY 4)	1	10	3/16	1	0.01	1.87	1.95	82.8	9	REPAIR/REPLACE WEATHERSTRIP ON ATTIC/ROOF HATCH
Office (FORBES FORESTRY 4)	1									PROVIDE A PRE-BLOWER DOOR TEST TO ESTABLISH A BASELINE FOR AIR SEALING
Laurel Mt. Maintenance (FORBES FORESTRY4)	4	20	1/16	1	0.03	5.00	5.87	249.7	#N/A	PERFORM ENTRY DOOR MAINTENANCE
Laurel Mt. Maintenance (FORBES FORESTRY4)	4	3	1/6	1	0.01	2.00	2.35	99.9	#N/A	INSTALL SWEEPS ON ENTRY DOORS
Laurel Mt. Maintenance (FORBES FORESTRY4)	4	17	1/8	1	0.06	8.50	9.97	424.5	#N/A	REPAIR/REPLACE WEATHERSTRIP ON ENTRY DOORS
Laurel Mt. Maintenance (FORBES FORESTRY4)	7	42	1/4	1	0.51	73.50	86.25	3670.5	#N/A	REPLACE GARAGE DOOR WEATHERSTRIPPING
Laurel Mt. Maintenance (FORBES FORESTRY4)	270	1	1/2	1	0.94	135.00	158.41	6741.7	#N/A	SEAL INTERIOR ROOF/WALL INTERSECTION
Maintenance- 1200 Skyline Drive Farmington (FORBES FORESTRY 4)	5	20	1/16	1	0.04	6.25	7.33	312.1	33	PERFORM ENTRY DOOR MAINTENANCE
Maintenance- 1200 Skyline Drive Farmington (FORBES FORESTRY 4)	4	3	1/6	1	0.01	2.00	2.35	99.9	11	INSTALL SWEEPS ON ENTRY DOORS
Maintenance- 1200 Skyline Drive Farmington (FORBES FORESTRY 4)	4	17	1/8	1	0.06	8.50	9.97	424.5	45	REPAIR/REPLACE WEATHERSTRIP ON ENTRY DOORS
Maintenance- 1200 Skyline Drive Farmington (FORBES FORESTRY 4)	1	3	1/6	1	0.00	0.50	0.59	25.0	3	INSTALL SWEEPS ON INTERIOR DOORS WHICH COMPARTMENTALIZE FLOORS, MECHANICAL ROOM AND ACCESS TO UNCONDITIONED AREAS
Maintenance- 1200 Skyline Drive Farmington (FORBES FORESTRY 4)	1	17	1/8	1	0.01	2.12	2.49	106.1	11	WEATHERSTRIP INTERIOR DOORS WHICH COMPARTMENTALIZE FLOORS, MECHANICAL ROOM AND ACCESS TO UNCONDITIONED AREAS
Maintenance- 1200 Skyline Drive Farmington (FORBES FORESTRY 4)	3	42	1/4	1	0.22	31.50	36.96	1573.1	166	REPLACE GARAGE DOOR WEATHERSTRIPPING
Maintenance- 1200 Skyline Drive Farmington (FORBES FORESTRY 4)	270	1	1/2	1	0.94	135.00	158.41	6741.7	710	SEAL INTERIOR ROOF/WALL INTERSECTION
Mt. Davis Maintenance- 1889 S. Wolf Rock Rd. (FORBES FORESTRY 4)	3	20	1/16	1	0.03	3.75	4.40	187.3	20	PERFORM ENTRY DOOR MAINTENANCE

©2013 Energy Systems Group, LLC

Weatherization Line by Line

Mt. Davis Maintenance- 1889 S. Wolf Rock Rd. (FORBES FORESTRY 4)	3	3	1/6	1	0.01	1.50	1.76	74.9	8	INSTALL SWEEPS ON ENTRY DOORS
Mt. Davis Maintenance- 1889 S. Wolf Rock Rd. (FORBES FORESTRY 4)	3	17	1/8	1	0.04	6.37	7.48	318.4	34	REPAIR/REPLACE WEATHERSTRIP ON ENTRY DOORS
Mt. Davis Maintenance- 1889 S. Wolf Rock Rd. (FORBES FORESTRY 4)	3	42	1/4	1	0.22	31.50	36.96	1573.1	166	REPLACE GARAGE DOOR WEATHERSTRIPPING

©2013 Energy Systems Group, LLC

Insulation Line by Line

	EXISTING CONDITIONS						PROPOSED UPGRADE				SAVINGS	
BLD	Sq Ft Needed	Existing R Value	Proposed R Value	Description	Current Heating MMBTU's	Current Cooling MMBTU's	Description	Proposed Heating MMBTU's	Proposed Cooling MMBTU's	Notes	Heat Savings in Therms	Heat Savings $$
Office (FORBES FORESTRY 4)	400	14.00	42.00	MISSING OR AGED BLOWN-IN INSULATION	3.62	0.72	RAISE R-VALUES USING BLOWN-IN OR LOOSE FILL INSULATION	1.21	0.24		28.37	$ 16.74
Maintenance- 1200 Skyline Drive Farmington (FORBES FORESTRY 4)	1,375	14.00	42.00	MISSING OR AGED BLOWN-IN INSULATION	12.44	2.48	RAISE R-VALUES USING BLOWN-IN OR LOOSE FILL INSULATION	4.15	0.83		97.54	$ 57.55

©2013 Energy Systems Group, LLC

PA STATE PARKS (GALLITZIN FORESTRY #6)
DETAILED SCOPE OF WORK

Existing Condition	QTY	UOM	Proposed Improvement
ENTRY DOOR MAINTENANCE NEEDED.	8	EACH	PERFORM ENTRY DOOR MAINTENANCE
WORN OUT ENTRY DOOR WEATHERSTRIPPING	7	EACH	REPAIR/REPLACE WEATHERSTRIP ON ENTRY DOORS
WORN OUT ENTRY DOOR SWEEP	7	EACH	INSTALL SWEEPS ON ENTRY DOORS
WORN OUT INTERIOR DOOR WEATHERSTRIP	1	EACH	WEATHERSTRIP INTERIOR DOORS WHICH COMPARTMENTALIZE FLOORS, MECHANICAL ROOM AND ACCESS TO UNCONDITIONED AREAS
WORN OUT INTERIOR DOOR SWEEPS	1	EACH	INSTALL SWEEPS ON INTERIOR DOORS WHICH COMPARTMENTALIZE FLOORS, MECHANICAL ROOM AND ACCESS TO UNCONDITIONED AREAS
WORN OUT GARAGE DOOR WEATHERSTRIP	10	EACH	REPLACE GARAGE DOOR WEATHERSTRIPPING
MISSING OR WORN AIR CONDITIONER SEALING	1	LN FT.	SEAL GAPS AROUND WINDOW AIR CONDITIONER
WALL JOINTS SEAL	56	LN FT.	SEAL EXTERIOR WALL JOINTS
UNSEALED PENETRATIONS	8	LN FT.	SEAL PENETRATIONS AT VARIOUS LOCATIONS
EXISTING ROOF WALL GAPS - INTERIOR	170	LN FT.	SEAL INTERIOR ROOF/WALL INTERSECTION

©2013 Energy Systems Group, LLC

Weatherization Line by Line

	EXISTING CONDITIONS									PROPOSED UPGRADE
BLD	QTY	Length (Ft)	Crack Width (in)	Crack Depth (in)	Total Area	Total Square Inches	CFM	BTU Loss	kWh Loss	Description
Babcock Maintenance 1 (GALLITZIN FORESTRY 6)	2	20	1/8	1	0.03	5.00	5.63	218.5	18	PERFORM ENTRY DOOR MAINTENANCE
Babcock Maintenance 1 (GALLITZIN FORESTRY 6)	2	3	1/4	1	0.01	1.50	1.69	65.6	6	INSTALL SWEEPS ON ENTRY DOORS
Babcock Maintenance 1 (GALLITZIN FORESTRY 6)	2	17	1/8	1	0.03	4.25	4.79	185.7	16	REPAIR/REPLACE WEATHERSTRIP ON ENTRY DOORS
Babcock Maintenance 1 (GALLITZIN FORESTRY 6)	2	42	1/2	1	0.29	42.00	47.33	1835.6	154	REPLACE GARAGE DOOR WEATHERSTRIPPING
Babcock Maintenance 1 (GALLITZIN FORESTRY 6)	8	1	1/4	1	0.01	2.00	2.25	87.4	7	SEAL PENETRATIONS AT VARIOUS LOCATIONS
Babcock Maintenance 1 (GALLITZIN FORESTRY 6)	56	1	1/6	1	0.06	9.33	10.52	407.9	34	SEAL EXTERIOR WALL JOINTS
Babcock Maintenance 2 (GALLITZIN FORESTRY 6)	3	20	1/8	1	0.05	7.50	8.45	327.8	28	PERFORM ENTRY DOOR MAINTENANCE
Babcock Maintenance 2 (GALLITZIN FORESTRY 6)	3	3	1/4	1	0.02	2.25	2.54	98.3	8	INSTALL SWEEPS ON ENTRY DOORS
Babcock Maintenance 2 (GALLITZIN FORESTRY 6)	3	17	1/8	1	0.04	6.37	7.18	278.6	23	REPAIR/REPLACE WEATHERSTRIP ON ENTRY DOORS
Babcock Maintenance 2 (GALLITZIN FORESTRY 6)	5	42	1/2	1	0.73	105.00	118.32	4588.9	386	REPLACE GARAGE DOOR WEATHERSTRIPPING
Blair Fire Station (GALLITZIN FORESTRY 6)	3	20	1/8	1	0.05	7.50	8.45	327.8	28	PERFORM ENTRY DOOR MAINTENANCE
Blair Fire Station (GALLITZIN FORESTRY 6)	2	3	1/4	1	0.01	1.50	1.69	65.6	6	INSTALL SWEEPS ON ENTRY DOORS
Blair Fire Station (GALLITZIN FORESTRY 6)	2	17	1/8	1	0.03	4.25	4.79	185.7	16	REPAIR/REPLACE WEATHERSTRIP ON ENTRY DOORS
Blair Fire Station (GALLITZIN FORESTRY 6)	3	36	1/2	1	0.37	54.00	60.85	2360.0	198	REPLACE GARAGE DOOR WEATHERSTRIPPING
Blair Fire Station (GALLITZIN FORESTRY 6)	170	1	1/2	1	0.59	85.00	95.78	3714.8	312	SEAL INTERIOR ROOF/WALL INTERSECTION
Blair Fire Station (GALLITZIN FORESTRY 6)	1	3	1/4	1	0.01	0.75	0.85	32.8	3	INSTALL SWEEPS ON INTERIOR DOORS WHICH COMPARTMENTALIZE FLOORS, MECHANICAL ROOM AND ACCESS TO UNCONDITIONED AREAS
Blair Fire Station (GALLITZIN FORESTRY 6)	1	17	1/8	1	0.01	2.12	2.39	92.9	8	WEATHERSTRIP INTERIOR DOORS WHICH COMPARTMENTALIZE FLOORS, MECHANICAL ROOM AND ACCESS TO UNCONDITIONED AREAS
Blair Fire Station (GALLITZIN FORESTRY 6)	1	6	1/4	1	0.01	1.50	1.69	65.6	6	SEAL GAPS AROUND WINDOW AIR CONDITIONER

©2013 Energy Systems Group, LLC

PA STATE PARKS (GODDARD)
DETAILED SCOPE OF WORK

Existing Condition	QTY	UOM	Proposed Improvement
ENTRY DOOR MAINTENANCE NEEDED.	21	EACH	PERFORM ENTRY DOOR MAINTENANCE
WORN OUT ENTRY DOOR WEATHERSTRIPPING	16	EACH	REPAIR/REPLACE WEATHERSTRIP ON ENTRY DOORS
WORN OUT ENTRY DOOR SWEEP	16	EACH	INSTALL SWEEPS ON ENTRY DOORS
WORN OUT INTERIOR DOOR WEATHERSTRIP	3	EACH	WEATHERSTRIP INTERIOR DOORS WHICH COMPARTMENTALIZE FLOORS, MECHANICAL ROOM AND ACCESS TO UNCONDITIONED AREAS
WORN OUT INTERIOR DOOR SWEEPS	3	EACH	INSTALL SWEEPS ON INTERIOR DOORS WHICH COMPARTMENTALIZE FLOORS, MECHANICAL ROOM AND ACCESS TO UNCONDITIONED AREAS
WORN OUT DOUBLE DOOR WEATHERSTRIPPING	1	EACH	REPAIR/REPLACE WEATHERSTRIP ON DOUBLE DOORS
WORN OUT DOUBLE DOOR SWEEP	1	EACH	INSTALL SWEEPS ON DOUBLE DOORS
WORN OUT GARAGE DOOR WEATHERSTRIP	3	EACH	REPLACE GARAGE DOOR WEATHERSTRIPPING
MISSING OR WORN WINDOWS SEALING	78	EACH	SEAL EXTERIOR WINDOW PERIMETERS
WALL JOINTS SEAL	40	LN FT.	SEAL EXTERIOR WALL JOINTS
MISSING OR AGED BLOWN-IN INSULATION	1000	LN FT.	RAISE R-VALUES USING BLOWN-IN OR LOOSE FILL INSULATION

©2013 Energy Systems Group, LLC

Weatherization Line by Line

	EXISTING CONDITIONS									PROPOSED UPGRADE
BLD	QTY	Length (Ft)	Crack Width (in)	Crack Depth (in)	Total Area	Total Square Inches	CFM	BTU Loss	kWh Loss	Description
Park Office/Maintenance/Carpenter (GODDARD)	9	20	1/16	1	0.08	11.25	13.20	561.8	59	PERFORM ENTRY DOOR MAINTENANCE
Park Office/Maintenance/Carpenter (GODDARD)	4	3	1/4	1	0.02	3.00	3.52	149.8	16	INSTALL SWEEPS ON ENTRY DOORS
Park Office/Maintenance/Carpenter (GODDARD)	4	17	3/16	1	0.09	12.75	14.96	636.7	67	REPAIR/REPLACE WEATHERSTRIP ON ENTRY DOORS
Park Office/Maintenance/Carpenter (GODDARD)	3	3	1/4	1	0.02	2.25	2.64	112.4	12	INSTALL SWEEPS ON INTERIOR DOORS WHICH COMPARTMENTALIZE FLOORS, MECHANICAL ROOM AND ACCESS TO UNCONDITIONED AREAS
Park Office/Maintenance/Carpenter (GODDARD)	3	17	3/16	1	0.07	9.56	11.22	477.5	50	WEATHERSTRIP INTERIOR DOORS WHICH COMPARTMENTALIZE FLOORS, MECHANICAL ROOM AND ACCESS TO UNCONDITIONED AREAS
Park Office/Maintenance/Carpenter (GODDARD)	1	6	1/4	1	0.01	1.50	1.76	74.9	8	INSTALL SWEEPS ON DOUBLE DOORS
Park Office/Maintenance/Carpenter (GODDARD)	1	20	3/16	1	0.03	3.75	4.40	187.3	20	REPAIR/REPLACE WEATHERSTRIP ON DOUBLE DOORS
Park Office/Maintenance/Carpenter (GODDARD)	54	1	1/24	1	0.02	2.25	2.64	112.4	12	SEAL EXTERIOR WINDOW PERIMETERS
Park Office/Maintenance/Carpenter (GODDARD)	40	1	1/24	1	0.01	1.67	1.96	83.2	9	SEAL EXTERIOR WALL JOINTS
Park Office/Maintenance/Carpenter (GODDARD)	3	42	1/2	1	0.44	63.00	73.93	3146.1	331	REPLACE GARAGE DOOR WEATHERSTRIPPING
Residence (GODDARD)	3	20	1/16	1	0.03	3.75	3.89	165.6	17	PERFORM ENTRY DOOR MAINTENANCE
Residence (GODDARD)	3	3	1/4	1	0.02	2.25	2.33	99.3	10	INSTALL SWEEPS ON ENTRY DOORS
Residence (GODDARD)	3	17	3/16	1	0.07	9.56	9.92	422.2	44	REPAIR/REPLACE WEATHERSTRIP ON ENTRY DOORS
Launch 3 Restroom (GODDARD)	3	20	1/16	1	0.03	3.75	3.40	144.6	15	PERFORM ENTRY DOOR MAINTENANCE
Launch 3 Restroom (GODDARD)	3	3	1/4	1	0.02	2.25	2.04	86.8	9	INSTALL SWEEPS ON ENTRY DOORS
Launch 3 Restroom (GODDARD)	3	17	3/16	1	0.07	9.56	8.67	368.8	39	REPAIR/REPLACE WEATHERSTRIP ON ENTRY DOORS
Launch 3 Restroom (GODDARD)	24	1	1/24	1	0.01	1.00	0.91	38.6	4	SEAL EXTERIOR WINDOW PERIMETERS
Launch 4 Restroom (GODDARD)	3	20	1/16	1	0.03	3.75	3.40	144.6	15	PERFORM ENTRY DOOR MAINTENANCE

©2013 Energy Systems Group, LLC

Weatherization Line by Line

Launch 4 Restroom (GODDARD)	3	3	1/4	1	0.02	2.25	2.04	86.8	9	INSTALL SWEEPS ON ENTRY DOORS
Launch 4 Restroom (GODDARD)	3	17	3/16	1	0.07	9.56	8.67	368.8	39	REPAIR/REPLACE WEATHERSTRIP ON ENTRY DOORS
Dam Restroom (GODDARD)	3	20	1/16	1	0.03	3.75	3.40	144.6	1.5	PERFORM ENTRY DOOR MAINTENANCE
Dam Restroom (GODDARD)	3	3	1/4	1	0.02	2.25	2.04	86.8	9	INSTALL SWEEPS ON ENTRY DOORS
Dam Restroom (GODDARD)	3	17	3/16	1	0.07	9.56	8.67	368.8	39	REPAIR/REPLACE WEATHERSTRIP ON ENTRY DOORS

©2013 Energy Systems Group, LLC

Insulation Line by Line

EXISTING CONDITIONS							PROPOSED UPGRADE				SAVINGS	
BLD	Sq Ft Needed	Existing R Value	Proposed R Value	Description	Current Heating MMBTU's	Current Cooling MMBTU's	Description	Proposed Heating MMBTU's	Proposed Cooling MMBTU's	Notes	Heat Savings in Therms	Cooling Savings in kWh
Residence (GODDARD)	1,000	8.00	42.00	MISSING OR AGED BLOWN-IN INSULATION	15.83	3.16	RAISE R-VALUES USING BLOWN-IN OR LOOSE FILL INSULATION	3.01	0.60	ATTIC	160.16	266.24

©2013 Energy Systems Group, LLC

PA STATE PARKS (JENNINGS)
DETAILED SCOPE OF WORK

Existing Condition	QTY	UOM	Proposed Improvement
ENTRY DOOR MAINTENANCE NEEDED.	8	EACH	PERFORM ENTRY DOOR MAINTENANCE
WORN OUT ENTRY DOOR WEATHERSTRIPPING	8	EACH	REPAIR/REPLACE WEATHERSTRIP ON ENTRY DOORS
WORN OUT ENTRY DOOR SWEEP	8	EACH	INSTALL SWEEPS ON ENTRY DOORS
WORN OUT GARAGE DOOR WEATHERSTRIP	2	LN FT.	REPLACE GARAGE DOOR WEATHERSTRIPPING

©2013 Energy Systems Group, LLC

Weatherization Line by Line

	EXISTING CONDITIONS									PROPOSED UPGRADE
BLD	QTY	Length (Ft)	Crack Width (in)	Crack Depth (in)	Total Area	Total Square Inches	CFM	BTU Loss	kWh Loss	Description
Maintenance Shop (JENNINGS)	2	32	1/2	1	0.22	32.00	33.20	1412.9	149	REPLACE GARAGE DOOR WEATHERSTRIPPING
Maintenance Shop (JENNINGS)	1	20	1/16	1	0.01	1.25	1.30	55.2	6	PERFORM ENTRY DOOR MAINTENANCE
Maintenance Shop (JENNINGS)	1	3	1/4	1	0.01	0.75	0.78	33.1	3	INSTALL SWEEPS ON ENTRY DOORS
Maintenance Shop (JENNINGS)	1	17	3/16	1	0.02	3.19	3.31	140.7	15	REPAIR/REPLACE WEATHERSTRIP ON ENTRY DOORS
Education Center (JENNINGS)	7	20	1/16	1	0.06	8.75	9.08	386.3	41	PERFORM ENTRY DOOR MAINTENANCE
Education Center (JENNINGS)	7	3	1/4	1	0.04	5.25	5.45	231.8	24	INSTALL SWEEPS ON ENTRY DOORS
Education Center (JENNINGS)	7	17	3/16	1	0.15	22.31	23.15	985.2	104	REPAIR/REPLACE WEATHERSTRIP ON ENTRY DOORS

©2013 Energy Systems Group, LLC

PA STATE PARKS (KEYSTONE)
DETAILED SCOPE OF WORK

Existing Condition	QTY	UOM	Proposed Improvement
ENTRY DOOR MAINTENANCE NEEDED.	29	EACH	PERFORM ENTRY DOOR MAINTENANCE
WORN OUT ENTRY DOOR WEATHERSTRIPPING	27	EACH	REPAIR/REPLACE WEATHERSTRIP ON ENTRY DOORS
WORN OUT ENTRY DOOR SWEEP	27	EACH	INSTALL SWEEPS ON ENTRY DOORS
WORN OUT INTERIOR DOOR WEATHERSTRIP	3	EACH	WEATHERSTRIP INTERIOR DOORS WHICH COMPARTMENTALIZE FLOORS, MECHANICAL ROOM AND ACCESS TO UNCONDITIONED AREAS
WORN OUT INTERIOR DOOR SWEEPS	3	EACH	INSTALL SWEEPS ON INTERIOR DOORS WHICH COMPARTMENTALIZE FLOORS, MECHANICAL ROOM AND ACCESS TO UNCONDITIONED AREAS
WORN OUT DOUBLE DOOR WEATHERSTRIPPING	1	LN FT.	REPAIR/REPLACE WEATHERSTRIP ON DOUBLE DOORS
WORN OUT DOUBLE DOOR SWEEP	1	EACH	INSTALL SWEEPS ON DOUBLE DOORS
WORN OUT GARAGE DOOR WEATHERSTRIP	3	LN FT.	REPLACE GARAGE DOOR WEATHERSTRIPPING
UNSEALED ATTIC/ROOF HATCH	1	LN FT.	REPAIR/REPLACE WEATHERSTRIP ON ATTIC/ROOF HATCH

©2013 Energy Systems Group, LLC

Weatherization Line by Line

	EXISTING CONDITIONS									PROPOSED UPGRADE
BLD	QTY	Length (Ft)	Crack Width (in)	Crack Depth (in)	Total Area	Total Square Inches	CFM	BTU Loss	kWh Loss	Description
Mortin Restroom (KEYSTONE)	3	20	1/32	1	0.01	1.87	1.56	60.6	5	PERFORM ENTRY DOOR MAINTENANCE
Mortin Restroom (KEYSTONE)	3	3	1/6	1	0.01	1.50	1.25	48.4	4	INSTALL SWEEPS ON ENTRY DOORS
Mortin Restroom (KEYSTONE)	3	17	1/8	1	0.04	6.37	5.31	205.9	17	REPAIR/REPLACE WEATHERSTRIP ON ENTRY DOORS
Vistor Center (KEYSTONE)	3	20	1/32	1	0.01	1.87	1.56	60.6	5	PERFORM ENTRY DOOR MAINTENANCE
Vistor Center (KEYSTONE)	3	3	1/6	1	0.01	1.50	1.25	48.4	4	INSTALL SWEEPS ON ENTRY DOORS
Vistor Center (KEYSTONE)	3	17	1/8	1	0.04	6.37	5.31	205.9	17	REPAIR/REPLACE WEATHERSTRIP ON ENTRY DOORS
Vistor Center (KEYSTONE)	3	3	1/6	1	0.01	1.50	1.25	48.4	4	INSTALL SWEEPS ON INTERIOR DOORS WHICH COMPARTMENTALIZE FLOORS, MECHANICAL ROOM AND ACCESS TO UNCONDITIONED AREAS
Vistor Center (KEYSTONE)	3	17	1/8	1	0.04	6.37	5.31	205.9	17	WEATHERSTRIP INTERIOR DOORS WHICH COMPARTMENTALIZE FLOORS, MECHANICAL ROOM AND ACCESS TO UNCONDITIONED AREAS
Maintenance (KEYSTONE)	5	20	1/32	1	0.02	3.12	3.52	136.5	11	PERFORM ENTRY DOOR MAINTENANCE
Maintenance (KEYSTONE)	3	3	1/6	1	0.01	1.50	1.69	65.5	6	INSTALL SWEEPS ON ENTRY DOORS
Maintenance (KEYSTONE)	3	17	1/8	1	0.04	6.37	7.18	278.5	23	REPAIR/REPLACE WEATHERSTRIP ON ENTRY DOORS
Maintenance (KEYSTONE)	1	6	1/6	1	0.01	1.00	1.13	43.7	4	INSTALL SWEEPS ON DOUBLE DOORS
Maintenance (KEYSTONE)	1	20	1/8	1	0.02	2.50	2.82	109.2	9	REPAIR/REPLACE WEATHERSTRIP ON DOUBLE DOORS
Maintenance (KEYSTONE)	3	42	1/4	1	0.22	31.50	35.48	1376.3	116	REPLACE GARAGE DOOR WEATHERSTRIPPING
Maintenance (KEYSTONE)	1	10	3/16	1	0.01	1.87	2.11	81.9	7	REPAIR/REPLACE WEATHERSTRIP ON ATTIC/ROOF HATCH
Showerhouse (KEYSTONE)	4	20	1/32	1	0.02	2.50	2.82	109.2	9	PERFORM ENTRY DOOR MAINTENANCE
Showerhouse (KEYSTONE)	4	3	1/6	1	0.01	2.00	2.25	87.4	7	INSTALL SWEEPS ON ENTRY DOORS
Showerhouse (KEYSTONE)	4	17	1/8	1	0.06	8.50	9.58	371.4	31	REPAIR/REPLACE WEATHERSTRIP ON ENTRY DOORS

©2013 Energy Systems Group, LLC

Weatherization Line by Line

Cabins 11 (KEYSTONE)	11	20	1/32	1	0.05	6.87	5.72	222.0	19		PERFORM ENTRY DOOR MAINTENANCE
Cabins 11 (KEYSTONE)	11	3	1/6	1	0.04	5.50	4.58	177.6	15		INSTALL SWEEPS ON ENTRY DOORS
Cabins 11 (KEYSTONE)	11	17	1/8	1	0.16	23.37	19.46	754.9	63		REPAIR/REPLACE WEATHERSTRIP ON ENTRY DOORS
Residence- by Maintenance (KEYSTONE)	3	20	1/32	1	0.01	1.87	1.56	60.6	5		PERFORM ENTRY DOOR MAINTENANCE
Residence- by Maintenance (KEYSTONE)	3	3	1/6	1	0.01	1.50	1.25	48.4	4		INSTALL SWEEPS ON ENTRY DOORS
Residence- by Maintenance (KEYSTONE)	3	17	1/8	1	0.04	6.37	5.31	205.9	17		REPAIR/REPLACE WEATHERSTRIP ON ENTRY DOORS

©2013 Energy Systems Group, LLC

PA STATE PARKS (KOOSER)
DETAILED SCOPE OF WORK

Existing Condition	QTY	UOM	Proposed Improvement
ENTRY DOOR MAINTENANCE NEEDED.	24	EACH	PERFORM ENTRY DOOR MAINTENANCE
WORN OUT ENTRY DOOR WEATHERSTRIPPING	21	EACH	REPAIR/REPLACE WEATHERSTRIP ON ENTRY DOORS
WORN OUT ENTRY DOOR SWEEP	21	EACH	INSTALL SWEEPS ON ENTRY DOORS
WORN OUT INTERIOR DOOR WEATHERSTRIP	1	EACH	WEATHERSTRIP INTERIOR DOORS WHICH COMPARTMENTALIZE FLOORS, MECHANICAL ROOM AND ACCESS TO UNCONDITIONED AREAS
WORN OUT INTERIOR DOOR SWEEPS	1	EACH	INSTALL SWEEPS ON INTERIOR DOORS WHICH COMPARTMENTALIZE FLOORS, MECHANICAL ROOM AND ACCESS TO UNCONDITIONED AREAS
WORN OUT DOUBLE DOOR WEATHERSTRIPPING	1	LN FT.	REPAIR/REPLACE WEATHERSTRIP ON DOUBLE DOORS
WORN OUT DOUBLE DOOR SWEEP	1	EACH	INSTALL SWEEPS ON DOUBLE DOORS
MISSING OR AGED BLOWN-IN INSULATION	392	EACH	RAISE R-VALUES USING BLOWN-IN OR LOOSE FILL INSULATION

©2013 Energy Systems Group, LLC

Weatherization Line by Line

	EXISTING CONDITIONS									PROPOSED UPGRADE
BLD	QTY	Length (Ft)	Crack Width (in)	Crack Depth (in)	Total Area	Total Square Inches	CFM	BTU Loss	kWh Loss	Description
Park Office (KOOSER)	3	20	1/32	1	0.01	1.87	1.56	60.6	5	PERFORM ENTRY DOOR MAINTENANCE
Park Office (KOOSER)	3	3	1/6	1	0.01	1.50	1.25	48.5	4	INSTALL SWEEPS ON ENTRY DOORS
Park Office (KOOSER)	3	17	1/8	1	0.04	6.37	5.31	206.0	18	REPAIR/REPLACE WEATHERSTRIP ON ENTRY DOORS
Residence- by Office (KOOSER)	4	20	1/32	1	0.02	2.50	2.44	94.5	8	PERFORM ENTRY DOOR MAINTENANCE
Residence- by Office (KOOSER)	3	3	1/6	1	0.01	1.50	1.46	56.7	5	INSTALL SWEEPS ON ENTRY DOORS
Residence- by Office (KOOSER)	3	17	1/8	1	0.04	6.37	6.21	240.9	21	REPAIR/REPLACE WEATHERSTRIP ON ENTRY DOORS
Residence- by Office (KOOSER)	1	3	1/6	1	0.00	0.50	0.49	18.9	2	INSTALL SWEEPS ON INTERIOR DOORS WHICH COMPARTMENTALIZE FLOORS, MECHANICAL ROOM AND ACCESS TO UNCONDITIONED AREAS
Residence- by Office (KOOSER)	1	17	1/8	1	0.01	2.12	2.07	80.3	7	WEATHERSTRIP INTERIOR DOORS WHICH COMPARTMENTALIZE FLOORS, MECHANICAL ROOM AND ACCESS TO UNCONDITIONED AREAS
Cabins 8 (KOOSER)	8	20	1/32	1	0.03	5.00	4.87	188.9	16	PERFORM ENTRY DOOR MAINTENANCE
Cabins 8 (KOOSER)	8	3	1/6	1	0.03	4.00	3.90	151.1	13	INSTALL SWEEPS ON ENTRY DOORS
Cabins 8 (KOOSER)	8	17	1/8	1	0.12	17.00	16.56	642.3	55	REPAIR/REPLACE WEATHERSTRIP ON ENTRY DOORS
Cabin Showerhouse (KOOSER)	7	20	1/32	1	0.03	4.37	3.64	141.4	12	PERFORM ENTRY DOOR MAINTENANCE
Cabin Showerhouse (KOOSER)	5	3	1/6	1	0.02	2.50	2.08	80.8	7	INSTALL SWEEPS ON ENTRY DOORS
Cabin Showerhouse (KOOSER)	5	17	1/8	1	0.07	10.62	8.85	343.3	29	REPAIR/REPLACE WEATHERSTRIP ON ENTRY DOORS
Cabin Showerhouse (KOOSER)	1	6	1/6	1	0.01	1.00	0.83	32.3	3	INSTALL SWEEPS ON DOUBLE DOORS
Cabin Showerhouse (KOOSER)	1	20	1/8	1	0.02	2.50	2.08	80.8	7	REPAIR/REPLACE WEATHERSTRIP ON DOUBLE DOORS
Modern Cabin 1 (KOOSER)	2	20	1/32	1	0.01	1.25	1.04	40.4	3	PERFORM ENTRY DOOR MAINTENANCE
Modern Cabin 1 (KOOSER)	2	3	1/6	1	0.01	1.00	0.83	32.3	3	INSTALL SWEEPS ON ENTRY DOORS

©2013 Energy Systems Group, LLC

Weatherization Line by Line

Modern Cabin 1 (KOOSER)	2	17	1/8	1	0.03	4.25	3.54	137.3	12	REPAIR/REPLACE WEATHERSTRIP ON ENTRY DOORS

©2013 Energy Systems Group, LLC

Insulation Line by Line

EXISTING CONDITIONS							PROPOSED UPGRADE				SAVINGS	
BLD	Sq Ft Needed	Existing R Value	Proposed R Value	Description	Current Heating MMBTU's	Current Cooling MMBTU's	Description	Proposed Heating MMBTU's	Proposed Cooling MMBTU's	Notes	Heat Savings in Therms	Cooling Savings in kWh
Residence- by Office (KOOSER)	392	14.00	42.00	MISSING OR AGED BLOWN-IN INSULATION	1.95	0.57	RAISE R-VALUES USING BLOWN-IN OR LOOSE FILL INSULATION	0.65	0.19		13.01	39.88

©2013 Energy Systems Group, LLC

PA STATE PARKS (LAUREL HILL)
DETAILED SCOPE OF WORK

Existing Condition	QTY	UOM	Proposed Improvement
ENTRY DOOR MAINTENANCE NEEDED.	78	EACH	PERFORM ENTRY DOOR MAINTENANCE
WORN OUT ENTRY DOOR WEATHERSTRIPPING	49	EACH	REPAIR/REPLACE WEATHERSTRIP ON ENTRY DOORS
WORN OUT ENTRY DOOR SWEEP	49	EACH	INSTALL SWEEPS ON ENTRY DOORS
WORN OUT INTERIOR DOOR WEATHERSTRIP	3	EACH	WEATHERSTRIP INTERIOR DOORS WHICH COMPARTMENTALIZE FLOORS, MECHANICAL ROOM AND ACCESS TO UNCONDITIONED AREAS
WORN OUT INTERIOR DOOR SWEEPS	3	EACH	INSTALL SWEEPS ON INTERIOR DOORS WHICH COMPARTMENTALIZE FLOORS, MECHANICAL ROOM AND ACCESS TO UNCONDITIONED AREAS
WORN OUT DOUBLE DOOR WEATHERSTRIPPING	10	LN FT.	REPAIR/REPLACE WEATHERSTRIP ON DOUBLE DOORS
WORN OUT DOUBLE DOOR SWEEP	10	EACH	INSTALL SWEEPS ON DOUBLE DOORS
WORN OUT GARAGE DOOR WEATHERSTRIP	5	LN FT.	REPLACE GARAGE DOOR WEATHERSTRIPPING
EXISTING ROOF WALL GAPS - INTERIOR	96	SQ FT.	SEAL INTERIOR ROOF/WALL INTERSECTION
MISSING OR AGED BLOWN-IN INSULATION	540	EACH	RAISE R-VALUES USING BLOWN-IN OR LOOSE FILL INSULATION

©2013 Energy Systems Group, LLC

Weatherization Line by Line

	EXISTING CONDITIONS									PROPOSED UPGRADE
BLD	QTY	Length (Ft)	Crack Width (in)	Crack Depth (in)	Total Area	Total Square Inches	CFM	BTU Loss	kWh Loss	Description
Lodge (Laurel Hill)	7	20	1/32	1	0.03	4.37	3.64	141.4	12	PERFORM ENTRY DOOR MAINTENANCE
Lodge (Laurel Hill)	2	3	1/4	1	0.01	1.50	1.25	48.5	4	INSTALL SWEEPS ON ENTRY DOORS
Lodge (Laurel Hill)	2	17	1/8	1	0.03	4.25	3.54	137.3	12	REPAIR/REPLACE WEATHERSTRIP ON ENTRY DOORS
Lodge (Laurel Hill)	2	6	1/4	1	0.02	3.00	2.50	96.9	8	INSTALL SWEEPS ON DOUBLE DOORS
Lodge (Laurel Hill)	2	20	1/8	1	0.03	5.00	4.17	161.6	14	REPAIR/REPLACE WEATHERSTRIP ON DOUBLE DOORS
Lodge (Laurel Hill)	1	3	1/4	1	0.01	0.75	0.62	24.2	2	INSTALL SWEEPS ON INTERIOR DOORS WHICH COMPARTMENTALIZE FLOORS, MECHANICAL ROOM AND ACCESS TO UNCONDITIONED AREAS
Lodge (Laurel Hill)	1	17	1/8	1	0.01	2.12	1.77	68.7	6	WEATHERSTRIP INTERIOR DOORS WHICH COMPARTMENTALIZE FLOORS, MECHANICAL ROOM AND ACCESS TO UNCONDITIONED AREAS
Residence Camp Rd. (Laurel Hill)	2	20	1/32	1	0.01	1.25	1.04	40.4	3	PERFORM ENTRY DOOR MAINTENANCE
Residence Camp Rd. (Laurel Hill)	2	3	1/4	1	0.01	1.50	1.25	48.5	4	INSTALL SWEEPS ON ENTRY DOORS
Residence Camp Rd. (Laurel Hill)	2	17	1/8	1	0.03	4.25	3.54	137.3	12	REPAIR/REPLACE WEATHERSTRIP ON ENTRY DOORS
Lakeside Lodge (Laurel Hill)	10	20	1/32	1	0.04	6.25	6.09	236.2	20	PERFORM ENTRY DOOR MAINTENANCE
Lakeside Lodge (Laurel Hill)	4	3	1/4	1	0.02	3.00	2.92	113.4	10	INSTALL SWEEPS ON ENTRY DOORS
Lakeside Lodge (Laurel Hill)	4	17	1/8	1	0.06	8.50	8.28	321.2	27	REPAIR/REPLACE WEATHERSTRIP ON ENTRY DOORS
Lakeside Lodge (Laurel Hill)	3	6	1/4	1	0.03	4.50	4.38	170.0	14	INSTALL SWEEPS ON DOUBLE DOORS
Lakeside Lodge (Laurel Hill)	3	20	1/8	1	0.05	7.50	7.31	283.4	24	REPAIR/REPLACE WEATHERSTRIP ON DOUBLE DOORS
Stable Lodge (Laurel Hill)	9	20	1/32	1	0.04	5.62	4.69	181.8	15	PERFORM ENTRY DOOR MAINTENANCE
Stable Lodge (Laurel Hill)	3	3	1/4	1	0.02	2.25	1.87	72.7	6	INSTALL SWEEPS ON ENTRY DOORS
Stable Lodge (Laurel Hill)	3	17	1/8	1	0.04	6.37	5.31	206.0	17	REPAIR/REPLACE WEATHERSTRIP ON ENTRY DOORS

©2013 Energy Systems Group, LLC

Weatherization Line by Line

Stable Lodge (Laurel Hill)	3	6	1/4	1	0.03	4.50	3.75	145.4	12	INSTALL SWEEPS ON DOUBLE DOORS
Stable Lodge (Laurel Hill)	3	20	1/8	1	0.05	7.50	6.25	242.3	20	REPAIR/REPLACE WEATHERSTRIP ON DOUBLE DOORS
Residence-118 by Barn Lodge (Laurel Hill)	9	20	1/32	1	0.04	5.62	4.69	181.8	15	PERFORM ENTRY DOOR MAINTENANCE
Residence-118 by Barn Lodge (Laurel Hill)	3	3	1/4	1	0.02	2.25	1.87	72.7	6	INSTALL SWEEPS ON ENTRY DOORS
Residence-118 by Barn Lodge (Laurel Hill)	3	17	1/8	1	0.04	6.37	5.31	206.0	17	REPAIR/REPLACE WEATHERSTRIP ON ENTRY DOORS
Residence-118 by Barn Lodge (Laurel Hill)	2	32	1/2	1	0.22	32.00	26.66	1034.0	87	REPLACE GARAGE DOOR WEATHERSTRIPPING
Lift Station- Picnic Area (Laurel Hill)	1	20	1/32	1	0.00	0.62	0.61	23.6	2	PERFORM ENTRY DOOR MAINTENANCE
Lift Station- Picnic Area (Laurel Hill)	1	3	1/4	1	0.01	0.75	0.73	28.3	2	INSTALL SWEEPS ON ENTRY DOORS
Lift Station- Picnic Area (Laurel Hill)	1	17	1/8	1	0.01	2.12	2.07	80.3	7	REPAIR/REPLACE WEATHERSTRIP ON ENTRY DOORS
Waste Water (Laurel Hill)	1	20	1/32	1	0.00	0.62	0.52	20.2	2	PERFORM ENTRY DOOR MAINTENANCE
Waste Water (Laurel Hill)	1	3	1/4	1	0.01	0.75	0.62	24.2	2	INSTALL SWEEPS ON ENTRY DOORS
Waste Water (Laurel Hill)	1	17	1/8	1	0.01	2.12	1.77	68.7	6	REPAIR/REPLACE WEATHERSTRIP ON ENTRY DOORS
Wellhouse (Laurel Hill)	3	20	1/32	1	0.01	1.87	1.56	60.6	5	PERFORM ENTRY DOOR MAINTENANCE
Wellhouse (Laurel Hill)	3	3	1/4	1	0.02	2.25	1.87	72.7	6	INSTALL SWEEPS ON ENTRY DOORS
Wellhouse (Laurel Hill)	3	17	1/8	1	0.04	6.37	5.31	206.0	17	REPAIR/REPLACE WEATHERSTRIP ON ENTRY DOORS
Wellhouse (Laurel Hill)	96	1	1 1/2	1	1.00	144.00	119.97	4653.0	391	SEAL INTERIOR ROOF/WALL INTERSECTION
Visitor Center (Laurel Hill)	3	20	1/32	1	0.01	1.87	1.56	60.6	5	PERFORM ENTRY DOOR MAINTENANCE
Visitor Center (Laurel Hill)	3	3	1/4	1	0.02	2.25	1.87	72.7	6	INSTALL SWEEPS ON ENTRY DOORS
Visitor Center (Laurel Hill)	3	17	1/8	1	0.04	6.37	5.31	206.0	17	REPAIR/REPLACE WEATHERSTRIP ON ENTRY DOORS

©2013 Energy Systems Group, LLC

Weatherization Line by Line

Restroom 2 (Laurel Hill)	6	20	1/32	1	0.03	3.75	4.23	163.9	14	PERFORM ENTRY DOOR MAINTENANCE
Restroom 2 (Laurel Hill)	6	3	1/4	1	0.03	4.50	5.07	196.7	17	INSTALL SWEEPS ON ENTRY DOORS
Restroom 2 (Laurel Hill)	6	17	1/8	1	0.09	12.75	14.37	557.2	47	REPAIR/REPLACE WEATHERSTRIP ON ENTRY DOORS
Residence Office by Office (Laurel Hill)	2	20	1/32	1	0.01	1.25	1.04	40.4	3	PERFORM ENTRY DOOR MAINTENANCE
Residence Office by Office (Laurel Hill)	2	3	1/4	1	0.01	1.50	1.25	48.5	4	INSTALL SWEEPS ON ENTRY DOORS
Residence Office by Office (Laurel Hill)	2	17	1/8	1	0.03	4.25	3.54	137.3	12	REPAIR/REPLACE WEATHERSTRIP ON ENTRY DOORS
Park Office (Laurel Hill)	6	20	1/32	1	0.03	3.75	3.65	141.7	12	PERFORM ENTRY DOOR MAINTENANCE
Park Office (Laurel Hill)	6	3	1/4	1	0.03	4.50	4.38	170.0	14	INSTALL SWEEPS ON ENTRY DOORS
Park Office (Laurel Hill)	6	17	1/8	1	0.09	12.75	12.42	481.8	41	REPAIR/REPLACE WEATHERSTRIP ON ENTRY DOORS
Maintenance (Laurel Hill)	3	20	1/32	1	0.01	1.87	1.83	70.8	6	PERFORM ENTRY DOOR MAINTENANCE
Maintenance (Laurel Hill)	3	3	1/4	1	0.02	2.25	2.19	85.0	7	INSTALL SWEEPS ON ENTRY DOORS
Maintenance (Laurel Hill)	3	17	1/8	1	0.04	6.37	6.21	240.9	20	REPAIR/REPLACE WEATHERSTRIP ON ENTRY DOORS
Mechanic Shop (Laurel Hill)	1	20	1/32	1	0.00	0.62	0.70	27.3	2	PERFORM ENTRY DOOR MAINTENANCE
Mechanic Shop (Laurel Hill)	1	3	1/4	1	0.01	0.75	0.85	32.8	3	INSTALL SWEEPS ON ENTRY DOORS
Mechanic Shop (Laurel Hill)	1	17	1/8	1	0.01	2.12	2.39	92.9	8	REPAIR/REPLACE WEATHERSTRIP ON ENTRY DOORS
Mechanic Shop (Laurel Hill)	2	42	1/2	1	0.29	42.00	47.33	1835.6	154	REPLACE GARAGE DOOR WEATHERSTRIPPING
Carpenter Shop (Laurel Hill)	7	20	1/32	1	0.03	4.37	4.93	191.2	16	PERFORM ENTRY DOOR MAINTENANCE
Carpenter Shop (Laurel Hill)	1	3	1/4	1	0.01	0.75	0.85	32.8	3	INSTALL SWEEPS ON ENTRY DOORS
Carpenter Shop (Laurel Hill)	1	17	1/8	1	0.01	2.12	2.39	92.9	8	REPAIR/REPLACE WEATHERSTRIP ON ENTRY DOORS

©2013 Energy Systems Group, LLC

Weatherization Line by Line

Carpenter Shop (Laurel Hill)	2	3	1/4	1	0.01	1.50	1.69	65.6	6	INSTALL SWEEPS ON INTERIOR DOORS WHICH COMPARTMENTALIZE FLOORS, MECHANICAL ROOM AND ACCESS TO UNCONDITIONED AREAS
Carpenter Shop (Laurel Hill)	2	17	1/8	1	0.03	4.25	4.79	185.7	16	WEATHERSTRIP INTERIOR DOORS WHICH COMPARTMENTALIZE FLOORS, MECHANICAL ROOM AND ACCESS TO UNCONDITIONED AREAS
Carpenter Shop (Laurel Hill)	2	6	1/4	1	0.02	3.00	3.38	131.1	11	INSTALL SWEEPS ON DOUBLE DOORS
Carpenter Shop (Laurel Hill)	2	20	1/8	1	0.03	5.00	5.63	218.5	18	REPAIR/REPLACE WEATHERSTRIP ON DOUBLE DOORS
Carpenter Shop (Laurel Hill)	1	36	1/2	1	0.12	18.00	20.28	786.7	66	REPLACE GARAGE DOOR WEATHERSTRIPPING
Residence- Top of hill by Office (Laurel Hill)	3	20	1/32	1	0.01	1.87	1.83	70.8	6	PERFORM ENTRY DOOR MAINTENANCE
Residence- Top of hill by Office (Laurel Hill)	3	3	1/4	1	0.02	2.25	2.19	85.0	7	INSTALL SWEEPS ON ENTRY DOORS
Residence- Top of hill by Office (Laurel Hill)	3	17	1/8	1	0.04	6.37	6.21	240.9	20	REPAIR/REPLACE WEATHERSTRIP ON ENTRY DOORS
Lodge-Huffman (Laurel Hill)	5	20	1/32	1	0.02	3.12	3.52	136.6	11	PERFORM ENTRY DOOR MAINTENANCE
Lodge-Huffman (Laurel Hill)	5	3	1/4	1	0.03	3.75	4.23	163.9	14	INSTALL SWEEPS ON ENTRY DOORS
Lodge-Huffman (Laurel Hill)	5	17	1/8	1	0.07	10.62	11.97	464.4	39	REPAIR/REPLACE WEATHERSTRIP ON ENTRY DOORS

©2013 Energy Systems Group, LLC

Insulation Line by Line

EXISTING CONDITIONS							PROPOSED UPGRADE				SAVINGS	
BLD	Sq Ft Needed	Existing R Value	Proposed R Value	Description	Current Heating MMBTU's	Current Cooling MMBTU's	Description	Proposed Heating MMBTU's	Proposed Cooling MMBTU's	Notes	Heat Savings in Therms	Cooling Savings in kWh
Residence Office by Office (Laurel Hill)	540	8.00	42.00	MISSING OR AGED BLOWN-IN INSULATION	9.04	1.36	RAISE R-VALUES USING BLOWN-IN OR LOOSE FILL INSULATION	1.72	0.26		93.87	-

©2013 Energy Systems Group, LLC

PA STATE PARKS (LAUREL RIDGE)
DETAILED SCOPE OF WORK

Existing Condition	QTY	UOM	Proposed Improvement
ENTRY DOOR MAINTENANCE NEEDED.	14	EACH	PERFORM ENTRY DOOR MAINTENANCE
WORN OUT ENTRY DOOR WEATHERSTRIPPING	7	EACH	REPAIR/REPLACE WEATHERSTRIP ON ENTRY DOORS
WORN OUT ENTRY DOOR SWEEP	7	EACH	INSTALL SWEEPS ON ENTRY DOORS
WORN OUT INTERIOR DOOR WEATHERSTRIP	5	EACH	WEATHERSTRIP INTERIOR DOORS WHICH COMPARTMENTALIZE FLOORS, MECHANICAL ROOM AND ACCESS TO UNCONDITIONED AREAS
WORN OUT INTERIOR DOOR SWEEPS	5	EACH	INSTALL SWEEPS ON INTERIOR DOORS WHICH COMPARTMENTALIZE FLOORS, MECHANICAL ROOM AND ACCESS TO UNCONDITIONED AREAS
WORN OUT DOUBLE DOOR WEATHERSTRIPPING	1	LN FT.	REPAIR/REPLACE WEATHERSTRIP ON DOUBLE DOORS
WORN OUT DOUBLE DOOR SWEEP	1	EACH	INSTALL SWEEPS ON DOUBLE DOORS
WORN OUT GARAGE DOOR WEATHERSTRIP	9	LN FT.	REPLACE GARAGE DOOR WEATHERSTRIPPING
EXISTING ROOF WALL GAPS - INTERIOR	270	SQ FT.	SEAL INTERIOR ROOF/WALL INTERSECTION

©2013 Energy Systems Group, LLC

Weatherization Line by Line

	EXISTING CONDITIONS									PROPOSED UPGRADE
BLD	QTY	Length (Ft)	Crack Width (in)	Crack Depth (in)	Total Area	Total Square Inches	CFM	BTU Loss	kWh Loss	Description
Maintenance (Laurel Ridge)	7	42	1/4	1	0.51	73.50	61.23	2375.0	200	REPLACE GARAGE DOOR WEATHERSTRIPPING
Maintenance (Laurel Ridge)	4	20	1/32	1	0.02	2.50	2.08	80.8	7	PERFORM ENTRY DOOR MAINTENANCE
Maintenance (Laurel Ridge)	4	3	1/6	1	0.01	2.00	1.67	64.6	5	INSTALL SWEEPS ON ENTRY DOORS
Maintenance (Laurel Ridge)	4	17	1/8	1	0.06	8.50	7.08	274.7	23	REPAIR/REPLACE WEATHERSTRIP ON ENTRY DOORS
Maintenance (Laurel Ridge)	270	1	1/2	1	0.94	135.00	112.47	4362.2	367	SEAL INTERIOR ROOF/WALL INTERSECTION
Ski Lodge (Laurel Ridge)	6	20	1/32	1	0.03	3.75	3.27	126.9	11	PERFORM ENTRY DOOR MAINTENANCE
Ski Lodge (Laurel Ridge)	1	3	1/6	1	0.00	0.50	0.44	16.9	1	INSTALL SWEEPS ON ENTRY DOORS
Ski Lodge (Laurel Ridge)	1	17	1/8	1	0.01	2.12	1.85	71.9	6	REPAIR/REPLACE WEATHERSTRIP ON ENTRY DOORS
Ski Lodge (Laurel Ridge)	1	6	1/6	1	0.01	1.00	0.87	33.8	3	INSTALL SWEEPS ON DOUBLE DOORS
Ski Lodge (Laurel Ridge)	1	20	1/8	1	0.02	2.50	2.18	84.6	7	REPAIR/REPLACE WEATHERSTRIP ON DOUBLE DOORS
Ski Lodge (Laurel Ridge)	3	3	1/6	1	0.01	1.50	1.31	50.8	4	INSTALL SWEEPS ON INTERIOR DOORS WHICH COMPARTMENTALIZE FLOORS, MECHANICAL ROOM AND ACCESS TO UNCONDITIONED AREAS
Ski Lodge (Laurel Ridge)	3	17	1/8	1	0.04	6.37	5.56	215.8	18	WEATHERSTRIP INTERIOR DOORS WHICH COMPARTMENTALIZE FLOORS, MECHANICAL ROOM AND ACCESS TO UNCONDITIONED AREAS
Ski Hut (Laurel Ridge)	4	20	1/32	1	0.02	2.50	2.08	80.8	7	PERFORM ENTRY DOOR MAINTENANCE
Ski Hut (Laurel Ridge)	2	3	1/6	1	0.01	1.00	0.83	32.3	3	INSTALL SWEEPS ON ENTRY DOORS
Ski Hut (Laurel Ridge)	2	17	1/8	1	0.03	4.25	3.54	137.3	12	REPAIR/REPLACE WEATHERSTRIP ON ENTRY DOORS
Ski Hut (Laurel Ridge)	2	3	1/6	1	0.01	1.00	0.83	32.3	3	INSTALL SWEEPS ON INTERIOR DOORS WHICH COMPARTMENTALIZE FLOORS, MECHANICAL ROOM AND ACCESS TO UNCONDITIONED AREAS
Ski Hut (Laurel Ridge)	2	17	1/8	1	0.03	4.25	3.54	137.3	12	WEATHERSTRIP INTERIOR DOORS WHICH COMPARTMENTALIZE FLOORS, MECHANICAL ROOM AND ACCESS TO UNCONDITIONED AREAS
Ski Hut (Laurel Ridge)	2	42	1/4	1	0.15	21.00	17.50	678.6	57	REPLACE GARAGE DOOR WEATHERSTRIPPING

©2013 Energy Systems Group, LLC

PA STATE PARKS (LINN RUN)
DETAILED SCOPE OF WORK

Existing Condition	QTY	UOM	Proposed Improvement
ENTRY DOOR MAINTENANCE NEEDED.	31	EACH	PERFORM ENTRY DOOR MAINTENANCE
WORN OUT ENTRY DOOR WEATHERSTRIPPING	25	EACH	REPAIR/REPLACE WEATHERSTRIP ON ENTRY DOORS
WORN OUT ENTRY DOOR SWEEP	25	EACH	INSTALL SWEEPS ON ENTRY DOORS
WORN OUT DOUBLE DOOR WEATHERSTRIPPING	3	LN FT.	REPAIR/REPLACE WEATHERSTRIP ON DOUBLE DOORS
WORN OUT DOUBLE DOOR SWEEP	3	EACH	INSTALL SWEEPS ON DOUBLE DOORS
WORN OUT GARAGE DOOR WEATHERSTRIP	4	LN FT.	REPLACE GARAGE DOOR WEATHERSTRIPPING
MISSING OR AGED BLOWN-IN INSULATION	600	EACH	RAISE R-VALUES USING BLOWN-IN OR LOOSE FILL INSULATION
THERMAX INSULATION	8	EACH	RAISE R-VALUES USING THERMAX INSULATION

©2013 Energy Systems Group, LLC

Weatherization Line by Line

	EXISTING CONDITIONS									PROPOSED UPGRADE
BLD	QTY	Length (Ft)	Crack Width (in)	Crack Depth (in)	Total Area	Total Square Inches	CFM	BTU Loss	kWh Loss	Description
Park Office (LINN RUN)	9	20	1/32	1	0.04	5.62	6.34	245.8	18	PERFORM ENTRY DOOR MAINTENANCE
Park Office (LINN RUN)	3	3	1/6	1	0.01	1.50	1.69	65.6	5	INSTALL SWEEPS ON ENTRY DOORS
Park Office (LINN RUN)	3	17	1/8	1	0.04	6.37	7.18	278.6	20	REPAIR/REPLACE WEATHERSTRIP ON ENTRY DOORS
Park Office (LINN RUN)	3	6	1/6	1	0.02	3.00	3.38	131.1	10	INSTALL SWEEPS ON DOUBLE DOORS
Park Office (LINN RUN)	3	20	1/8	1	0.05	7.50	8.45	327.8	24	REPAIR/REPLACE WEATHERSTRIP ON DOUBLE DOORS
Cabins 10 (LINN RUN)	11	20	1/32	1	0.05	6.87	6.70	259.8	19	PERFORM ENTRY DOOR MAINTENANCE
Cabins 10 (LINN RUN)	11	3	1/6	1	0.04	5.50	5.36	207.8	15	INSTALL SWEEPS ON ENTRY DOORS
Cabins 10 (LINN RUN)	11	17	1/8	1	0.16	23.37	22.77	883.2	64	REPAIR/REPLACE WEATHERSTRIP ON ENTRY DOORS
Bath House (LINN RUN)	4	20	1/32	1	0.02	2.50	2.08	80.8	6	PERFORM ENTRY DOOR MAINTENANCE
Bath House (LINN RUN)	4	3	1/6	1	0.01	2.00	1.67	64.6	5	INSTALL SWEEPS ON ENTRY DOORS
Bath House (LINN RUN)	4	17	1/8	1	0.06	8.50	7.08	274.7	20	REPAIR/REPLACE WEATHERSTRIP ON ENTRY DOORS
Residence (LINN RUN)	2	20	1/32	1	0.01	1.25	1.04	40.4	3	PERFORM ENTRY DOOR MAINTENANCE
Residence (LINN RUN)	2	3	1/6	1	0.01	1.00	0.83	32.3	2	INSTALL SWEEPS ON ENTRY DOORS
Residence (LINN RUN)	2	17	1/8	1	0.03	4.25	3.54	137.3	10	REPAIR/REPLACE WEATHERSTRIP ON ENTRY DOORS
Storage Maintenance (LINN RUN)	2	20	1/32	1	0.01	1.25	1.41	54.6	4	PERFORM ENTRY DOOR MAINTENANCE
Storage Maintenance (LINN RUN)	2	3	1/6	1	0.01	1.00	1.13	43.7	3	INSTALL SWEEPS ON ENTRY DOORS
Storage Maintenance (LINN RUN)	2	17	1/8	1	0.03	4.25	4.79	185.7	14	REPAIR/REPLACE WEATHERSTRIP ON ENTRY DOORS
Storage Maintenance (LINN RUN)	2	42	1/4	1	0.15	21.00	23.66	917.8	67	REPLACE GARAGE DOOR WEATHERSTRIPPING

©2013 Energy Systems Group, LLC

Weatherization Line by Line

Breakroom (LINN RUN)	1	20	1/32	1	0.00	0.62	0.55	21.2	2	PERFORM ENTRY DOOR MAINTENANCE
Breakroom (LINN RUN)	1	3	1/6	1	0.00	0.50	0.44	16.9	1	INSTALL SWEEPS ON ENTRY DOORS
Breakroom (LINN RUN)	1	17	1/8	1	0.01	2.12	1.85	71.9	5	REPAIR/REPLACE WEATHERSTRIP ON ENTRY DOORS
Truck Bay (LINN RUN)	1	20	1/32	1	0.00	0.62	0.61	23.6	2	PERFORM ENTRY DOOR MAINTENANCE
Truck Bay (LINN RUN)	1	3	1/6	1	0.00	0.50	0.49	18.9	1	INSTALL SWEEPS ON ENTRY DOORS
Truck Bay (LINN RUN)	1	17	1/8	1	0.01	2.12	2.07	80.3	6	REPAIR/REPLACE WEATHERSTRIP ON ENTRY DOORS
Truck Bay (LINN RUN)	1	36	1/4	1	0.06	9.00	8.77	340.1	25	REPLACE GARAGE DOOR WEATHERSTRIPPING
Carpenter Shop (LINN RUN)	1	20	1/32	1	0.00	0.62	0.61	23.6	2	PERFORM ENTRY DOOR MAINTENANCE
Carpenter Shop (LINN RUN)	1	3	1/6	1	0.00	0.50	0.49	18.9	1	INSTALL SWEEPS ON ENTRY DOORS
Carpenter Shop (LINN RUN)	1	17	1/8	1	0.01	2.12	2.07	80.3	6	REPAIR/REPLACE WEATHERSTRIP ON ENTRY DOORS
Carpenter Shop (LINN RUN)	1	36	1/4	1	0.06	9.00	8.77	340.1	25	REPLACE GARAGE DOOR WEATHERSTRIPPING

©2013 Energy Systems Group, LLC

Insulation Line by Line

	EXISTING CONDITIONS						PROPOSED UPGRADE				SAVINGS	
BLD	Sq Ft Needed	Existing R Value	Proposed R Value	Description	Current Heating MMBTU's	Current Cooling MMBTU's	Description	Proposed Heating MMBTU's	Proposed Cooling MMBTU's	Notes	Heat Savings in Therms	Cooling Savings in kWh
Breakroom (LINN RUN)	8	1.00	7.00	THERMAX INSULATION	0.53	0.14	RAISE R-VALUES USING THERMAX INSULATION	0.08	0.02	2 SETS OF 1x1 AND 1 SET OF 2x2	4.57	-
Carpenter Shop (LINN RUN)	600	14.00	42.00	MISSING OR AGED BLOWN-IN INSULATION	2.85	0.75	RAISE R-VALUES USING BLOWN-IN OR LOOSE FILL INSULATION	0.95	0.25		24.39	-

©2013 Energy Systems Group, LLC

PA STATE PARKS (McCONNELL'S MILL)
DETAILED SCOPE OF WORK

Existing Condition	QTY	UOM	Proposed Improvement
ENTRY DOOR MAINTENANCE NEEDED.	3	EACH	PERFORM ENTRY DOOR MAINTENANCE
WORN OUT ENTRY DOOR WEATHERSTRIPPING	2	EACH	REPAIR/REPLACE WEATHERSTRIP ON ENTRY DOORS
WORN OUT ENTRY DOOR SWEEP	2	EACH	INSTALL SWEEPS ON ENTRY DOORS
WORN OUT INTERIOR DOOR WEATHERSTRIP	1	EACH	WEATHERSTRIP INTERIOR DOORS WHICH COMPARTMENTALIZE FLOORS, MECHANICAL ROOM AND ACCESS TO UNCONDITIONED AREAS
WORN OUT INTERIOR DOOR SWEEPS	1	EACH	INSTALL SWEEPS ON INTERIOR DOORS WHICH COMPARTMENTALIZE FLOORS, MECHANICAL ROOM AND ACCESS TO UNCONDITIONED AREAS
WORN OUT GARAGE DOOR WEATHERSTRIP	1	LN FT.	REPLACE GARAGE DOOR WEATHERSTRIPPING

©2013 Energy Systems Group, LLC

Weatherization Line by Line

	EXISTING CONDITIONS									PROPOSED UPGRADE
BLD	QTY	Length (Ft)	Crack Width (in)	Crack Depth (in)	Total Area	Total Square Inches	CFM	BTU Loss	kWh Loss	Description
Maintenance (McCONNELLS MILL)	1	32	1/2	1	0.11	16.00	18.77	799.0	78	REPLACE GARAGE DOOR WEATHERSTRIPPING
Maintenance (McCONNELLS MILL)	3	20	1/16	1	0.03	3.75	4.40	187.3	18	PERFORM ENTRY DOOR MAINTENANCE
Maintenance (McCONNELLS MILL)	2	3	1/4	1	0.01	1.50	1.76	74.9	7	INSTALL SWEEPS ON ENTRY DOORS
Maintenance (McCONNELLS MILL)	2	17	3/16	1	0.04	6.37	7.48	318.4	31	REPAIR/REPLACE WEATHERSTRIP ON ENTRY DOORS
Maintenance (McCONNELLS MILL)	1	3	1/4	1	0.01	0.75	0.88	37.5	4	INSTALL SWEEPS ON INTERIOR DOORS WHICH COMPARTMENTALIZE FLOORS, MECHANICAL ROOM AND ACCESS TO UNCONDITIONED AREAS
Maintenance (McCONNELLS MILL)	1	17	3/16	1	0.02	3.19	3.74	159.2	16	WEATHERSTRIP INTERIOR DOORS WHICH COMPARTMENTALIZE FLOORS, MECHANICAL ROOM AND ACCESS TO UNCONDITIONED AREAS

©2013 Energy Systems Group, LLC

PA STATE PARKS (MORAINE)
DETAILED SCOPE OF WORK

Existing Condition	QTY	UOM	Proposed Improvement
ENTRY DOOR MAINTENANCE NEEDED.	60	EACH	PERFORM ENTRY DOOR MAINTENANCE
WORN OUT ENTRY DOOR WEATHERSTRIPPING	51	EACH	REPAIR/REPLACE WEATHERSTRIP ON ENTRY DOORS
WORN OUT ENTRY DOOR SWEEP	51	EACH	INSTALL SWEEPS ON ENTRY DOORS
WORN OUT INTERIOR DOOR WEATHERSTRIP	5	EACH	WEATHERSTRIP INTERIOR DOORS WHICH COMPARTMENTALIZE FLOORS, MECHANICAL ROOM AND ACCESS TO UNCONDITIONED AREAS
WORN OUT INTERIOR DOOR SWEEPS	5	EACH	INSTALL SWEEPS ON INTERIOR DOORS WHICH COMPARTMENTALIZE FLOORS, MECHANICAL ROOM AND ACCESS TO UNCONDITIONED AREAS
WORN OUT DOUBLE DOOR WEATHERSTRIPPING	1	LN FT.	REPAIR/REPLACE WEATHERSTRIP ON DOUBLE DOORS
WORN OUT DOUBLE DOOR SWEEP	1	EACH	INSTALL SWEEPS ON DOUBLE DOORS
WORN OUT GARAGE DOOR WEATHERSTRIP	11	LN FT.	REPLACE GARAGE DOOR WEATHERSTRIPPING
UNSEALED ATTIC/ROOF HATCH	2	LN FT.	REPAIR/REPLACE WEATHERSTRIP ON ATTIC/ROOF HATCH
MISSING OR WORN WINDOWS SEALING	99	LN FT.	SEAL EXTERIOR WINDOW PERIMETERS
MISSING OR WORN AIR CONDITIONER SEALING	1	SQ FT.	SEAL GAPS AROUND WINDOW AIR CONDITIONER
EXISTING SINGLE/DOUBLE PANE WINDOW 2x3	7	EACH	INSTALL DOUBLE PANE WINDOW
UNINSULATED 1 INCH COPPER PIPE	10	EACH	INSTALL NEW 1 INCH PIPE INSULATION
UNINSULATED 1/2 INCH COPPER PIPE	64	EACH	INSTALL NEW 1/2 INCH PIPE INSULATION
UNINSULATED 3/4 INCH COPPER PIPE	113	EACH	INSTALL NEW 3/4 INCH PIPE INSULATION
EXISTING SINGLE/DOUBLE PANE WINDOW 2x5	9	EACH	INSTALL DOUBLE PANE WINDOW
EXISTING SINGLE/DOUBLE PANE WINDOW 2x4	4	EACH	INSTALL DOUBLE PANE WINDOW
EXISTING SINGLE/DOUBLE PANE WINDOW 2x2	3	EACH	INSTALL DOUBLE PANE WINDOW
EXISTING SINGLE/DOUBLE PANE WINDOW 9x4	1	EACH	INSTALL DOUBLE PANE WINDOW
EXISTING SINGLE/DOUBLE PANE WINDOW 1x2	2	EACH	INSTALL DOUBLE PANE WINDOW
EXISTING SINGLE/DOUBLE PANE WINDOW 5x4	1	LN FT.	INSTALL DOUBLE PANE WINDOW
EXISTING SINGLE/DOUBLE PANE WINDOW 6x3	2	EACH	INSTALL DOUBLE PANE WINDOW
EXISTING SINGLE/DOUBLE PANE WINDOW 10x4	1	EACH	INSTALL DOUBLE PANE WINDOW

©2013 Energy Systems Group, LLC

Weatherization Line by Line

	EXISTING CONDITIONS									PROPOSED UPGRADE
BLD	QTY	Length (Ft)	Crack Width (in)	Crack Depth (in)	Total Area	Total Square Inches	CFM	BTU Loss	kWh Loss	Description
Residence- 200 N. Shore Drive (MORAINE)	3	20	1/32	1	0.01	1.87	2.20	93.6	8	PERFORM ENTRY DOOR MAINTENANCE
Residence- 200 N. Shore Drive (MORAINE)	2	3	1/6	1	0.01	1.00	1.17	49.9	4	INSTALL SWEEPS ON ENTRY DOORS
Residence- 200 N. Shore Drive (MORAINE)	2	17	1/8	1	0.03	4.25	4.99	212.2	18	REPAIR/REPLACE WEATHERSTRIP ON ENTRY DOORS
Residence- 200 N. Shore Drive (MORAINE)	1	3	1/6	1	0.00	0.50	0.59	25.0	2	INSTALL SWEEPS ON INTERIOR DOORS WHICH COMPARTMENTALIZE FLOORS, MECHANICAL ROOM AND ACCESS TO UNCONDITIONED AREAS
Residence- 200 N. Shore Drive (MORAINE)	1	17	1/8	1	0.01	2.12	2.49	106.1	9	WEATHERSTRIP INTERIOR DOORS WHICH COMPARTMENTALIZE FLOORS, MECHANICAL ROOM AND ACCESS TO UNCONDITIONED AREAS
Residence- 200 N. Shore Drive (MORAINE)	36	1	1/32	1	0.01	1.12	1.32	56.2	5	SEAL EXTERIOR WINDOW PERIMETERS
North Shore Maintenance (MORAINE)	4	20	1/32	1	0.02	2.50	2.59	110.4	9	PERFORM ENTRY DOOR MAINTENANCE
North Shore Maintenance (MORAINE)	4	3	1/6	1	0.01	2.00	2.07	88.3	8	INSTALL SWEEPS ON ENTRY DOORS
North Shore Maintenance (MORAINE)	4	17	1/8	1	0.06	8.50	8.82	375.3	32	REPAIR/REPLACE WEATHERSTRIP ON ENTRY DOORS
North Shore Maintenance (MORAINE)	3	34	1/8	1	0.09	12.75	13.23	563.0	48	REPLACE GARAGE DOOR WEATHERSTRIPPING
Camp Ground Restroom (MORAINE)	3	20	1/32	1	0.01	1.87	1.70	72.3	6	PERFORM ENTRY DOOR MAINTENANCE
Camp Ground Restroom (MORAINE)	3	3	1/6	1	0.01	1.50	1.36	57.9	5	INSTALL SWEEPS ON ENTRY DOORS
Camp Ground Restroom (MORAINE)	3	17	1/8	1	0.04	6.37	5.78	245.9	21	REPAIR/REPLACE WEATHERSTRIP ON ENTRY DOORS
Cabins 11 (MORAINE)	11	20	1/32	1	0.05	6.87	6.23	265.2	23	PERFORM ENTRY DOOR MAINTENANCE
Cabins 11 (MORAINE)	11	3	1/6	1	0.04	5.50	4.98	212.1	18	INSTALL SWEEPS ON ENTRY DOORS
Cabins 11 (MORAINE)	11	17	1/16	1	0.08	11.69	10.59	450.8	39	REPAIR/REPLACE WEATHERSTRIP ON ENTRY DOORS
Water Treatment (MORAINE)	5	20	1/32	1	0.02	3.12	2.83	120.5	10	PERFORM ENTRY DOOR MAINTENANCE
Water Treatment (MORAINE)	1	3	1/6	1	0.00	0.50	0.45	19.3	2	INSTALL SWEEPS ON ENTRY DOORS

©2013 Energy Systems Group, LLC

Weatherization Line by Line

Water Treatment (MORAINE)	1	17	1/8	1	0.01	2.12	1.93	82.0	7	REPAIR/REPLACE WEATHERSTRIP ON ENTRY DOORS
Water Treatment (MORAINE)	1	6	1/6	1	0.01	1.00	0.91	38.6	3	INSTALL SWEEPS ON DOUBLE DOORS
Water Treatment (MORAINE)	1	20	1/8	1	0.02	2.50	2.27	96.4	8	REPAIR/REPLACE WEATHERSTRIP ON DOUBLE DOORS
Water Treatment (MORAINE)	1	6	1/4	1	0.01	1.50	1.36	57.9	5	SEAL GAPS AROUND WINDOW AIR CONDITIONER
Marina Office/Garage (MORAINE)	3	20	1/32	1	0.01	1.87	1.95	82.8	7	PERFORM ENTRY DOOR MAINTENANCE
Marina Office/Garage (MORAINE)	2	3	1/6	1	0.01	1.00	1.04	44.2	4	INSTALL SWEEPS ON ENTRY DOORS
Marina Office/Garage (MORAINE)	2	17	1/8	1	0.03	4.25	4.41	187.7	16	REPAIR/REPLACE WEATHERSTRIP ON ENTRY DOORS
Marina Office/Garage (MORAINE)	1	3	1/6	1	0.00	0.50	0.52	22.1	2	INSTALL SWEEPS ON INTERIOR DOORS WHICH COMPARTMENTALIZE FLOORS, MECHANICAL ROOM AND ACCESS TO UNCONDITIONED AREAS
Marina Office/Garage (MORAINE)	1	17	1/8	1	0.01	2.12	2.20	93.8	8	WEATHERSTRIP INTERIOR DOORS WHICH COMPARTMENTALIZE FLOORS, MECHANICAL ROOM AND ACCESS TO UNCONDITIONED AREAS
Marina Office/Garage (MORAINE)	1	42	1/8	1	0.04	5.25	5.45	231.8	20	REPLACE GARAGE DOOR WEATHERSTRIPPING
Marina Office/Garage (MORAINE)	1	10	3/16	1	0.01	1.87	1.95	82.8	7	REPAIR/REPLACE WEATHERSTRIP ON ATTIC/ROOF HATCH
Residence- 197 Park Rd. (MORAINE)	2	20	1/32	1	0.01	1.25	1.30	55.2	5	PERFORM ENTRY DOOR MAINTENANCE
Residence- 197 Park Rd. (MORAINE)	2	3	1/6	1	0.01	1.00	1.04	44.2	4	INSTALL SWEEPS ON ENTRY DOORS
Residence- 197 Park Rd. (MORAINE)	2	17	1/8	1	0.03	4.25	4.41	187.7	16	REPAIR/REPLACE WEATHERSTRIP ON ENTRY DOORS
Residence- 197 Park Rd. (MORAINE)	63	1	1/32	1	0.01	1.97	2.04	86.9	7	SEAL EXTERIOR WINDOW PERIMETERS
Residence- 300 Park Rd. (MORAINE)	3	20	1/32	1	0.01	1.87	1.95	82.8	7	PERFORM ENTRY DOOR MAINTENANCE
Residence- 300 Park Rd. (MORAINE)	3	3	1/6	1	0.01	1.50	1.56	66.2	6	INSTALL SWEEPS ON ENTRY DOORS
Residence- 300 Park Rd. (MORAINE)	3	17	1/8	1	0.04	6.37	6.61	281.5	24	REPAIR/REPLACE WEATHERSTRIP ON ENTRY DOORS
Residence- 300 Park Rd. (MORAINE)	2	28	1/4	1	0.10	14.00	14.52	618.2	53	REPLACE GARAGE DOOR WEATHERSTRIPPING

©2013 Energy Systems Group, LLC

Weatherization Line by Line

Residence- 150 Park Rd. (MORAINE)	3	20	1/32	1	0.01	1.87	2.20	93.6	8	PERFORM ENTRY DOOR MAINTENANCE
Residence- 150 Park Rd. (MORAINE)	3	3	1/6	1	0.01	1.50	1.76	74.9	6	INSTALL SWEEPS ON ENTRY DOORS
Residence- 150 Park Rd. (MORAINE)	3	17	1/8	1	0.04	6.37	7.48	318.4	27	REPAIR/REPLACE WEATHERSTRIP ON ENTRY DOORS
Residence- 150 Park Rd. (MORAINE)	1	10	3/16	1	0.01	1.87	2.20	93.6	8	REPAIR/REPLACE WEATHERSTRIP ON ATTIC/ROOF HATCH
528 Launch Restroom (MORAINE)	3	20	1/32	1	0.01	1.87	1.70	72.3	6	PERFORM ENTRY DOOR MAINTENANCE
528 Launch Restroom (MORAINE)	3	3	1/6	1	0.01	1.50	1.36	57.9	5	INSTALL SWEEPS ON ENTRY DOORS
528 Launch Restroom (MORAINE)	3	17	1/8	1	0.04	6.37	5.78	245.9	21	REPAIR/REPLACE WEATHERSTRIP ON ENTRY DOORS
Pleasant Valley Restroom by Maintenance (MORAINE)	3	20	1/32	1	0.01	1.87	1.70	72.3	6	PERFORM ENTRY DOOR MAINTENANCE
Pleasant Valley Restroom by Maintenance (MORAINE)	3	3	1/6	1	0.01	1.50	1.36	57.9	5	INSTALL SWEEPS ON ENTRY DOORS
Pleasant Valley Restroom by Maintenance (MORAINE)	3	17	1/8	1	0.04	6.37	5.78	245.9	21	REPAIR/REPLACE WEATHERSTRIP ON ENTRY DOORS
Maintenance South Shore (MORAINE)	6	20	1/32	1	0.03	3.75	4.40	187.3	16	PERFORM ENTRY DOOR MAINTENANCE
Maintenance South Shore (MORAINE)	5	3	1/6	1	0.02	2.50	2.93	124.8	11	INSTALL SWEEPS ON ENTRY DOORS
Maintenance South Shore (MORAINE)	5	17	1/16	1	0.04	5.31	6.23	265.3	23	REPAIR/REPLACE WEATHERSTRIP ON ENTRY DOORS
Maintenance South Shore (MORAINE)	1	3	1/6	1	0.00	0.50	0.59	25.0	2	INSTALL SWEEPS ON INTERIOR DOORS WHICH COMPARTMENTALIZE FLOORS, MECHANICAL ROOM AND ACCESS TO UNCONDITIONED AREAS
Maintenance South Shore (MORAINE)	1	17	1/8	1	0.01	2.12	2.49	106.1	9	WEATHERSTRIP INTERIOR DOORS WHICH COMPARTMENTALIZE FLOORS, MECHANICAL ROOM AND ACCESS TO UNCONDITIONED AREAS
Maintenance South Shore (MORAINE)	5	36	1/16	1	0.08	11.25	13.20	561.8	48	REPLACE GARAGE DOOR WEATHERSTRIPPING
Park Office (MORAINE)	5	20	1/32	1	0.02	3.12	3.24	138.0	12	PERFORM ENTRY DOOR MAINTENANCE
Park Office (MORAINE)	4	3	1/6	1	0.01	2.00	2.07	88.3	8	INSTALL SWEEPS ON ENTRY DOORS
Park Office (MORAINE)	4	17	1/8	1	0.06	8.50	8.82	375.3	32	REPAIR/REPLACE WEATHERSTRIP ON ENTRY DOORS

©2013 Energy Systems Group, LLC

Weatherization Line by Line

Park Office (MORAINE)	1	3	1/6	1	0.00	0.50	0.52	22.1	2	INSTALL SWEEPS ON INTERIOR DOORS WHICH COMPARTMENTALIZE FLOORS, MECHANICAL ROOM AND ACCESS TO UNCONDITIONED AREAS
Park Office (MORAINE)	1	17	1/8	1	0.01	2.12	2.20	93.8	8	WEATHERSTRIP INTERIOR DOORS WHICH COMPARTMENTALIZE FLOORS, MECHANICAL ROOM AND ACCESS TO UNCONDITIONED AREAS
105 Big Run (MORAINE)	4	20	1/32	1	0.02	2.50	2.93	124.8	11	PERFORM ENTRY DOOR MAINTENANCE
105 Big Run (MORAINE)	3	3	1/6	1	0.01	1.50	1.76	74.9	6	INSTALL SWEEPS ON ENTRY DOORS
105 Big Run (MORAINE)	3	17	1/8	1	0.04	6.37	7.48	318.4	27	REPAIR/REPLACE WEATHERSTRIP ON ENTRY DOORS
105 Big Run (MORAINE)	1	3	1/6	1	0.00	0.50	0.59	25.0	2	INSTALL SWEEPS ON INTERIOR DOORS WHICH COMPARTMENTALIZE FLOORS, MECHANICAL ROOM AND ACCESS TO UNCONDITIONED AREAS
105 Big Run (MORAINE)	1	17	1/8	1	0.01	2.12	2.49	106.1	9	WEATHERSTRIP INTERIOR DOORS WHICH COMPARTMENTALIZE FLOORS, MECHANICAL ROOM AND ACCESS TO UNCONDITIONED AREAS
Residence-"Greenhouse" by Park Office (MORAINE)	2	20	1/32	1	0.01	1.25	1.30	55.2	5	PERFORM ENTRY DOOR MAINTENANCE
Residence-"Greenhouse" by Park Office (MORAINE)	2	3	1/6	1	0.01	1.00	1.04	44.2	4	INSTALL SWEEPS ON ENTRY DOORS
Residence-"Greenhouse" by Park Office (MORAINE)	2	17	1/8	1	0.03	4.25	4.41	187.7	16	REPAIR/REPLACE WEATHERSTRIP ON ENTRY DOORS

©2013 Energy Systems Group, LLC

EXISTING CONDITIONS								PROPOSED UPGRADE			
BLD	QTY	Sq Ft Needed	Existing R Value	Proposed R Value	Description	Current Heating MMBTU's	Current Cooling MMBTU's	Description	Proposed Heating MMBTU's	Proposed Cooling MMBTU's
Residence- 200 N. Shore Drive (MORAINE)	9	90	0.82	3.50	EXISTING SINGLE/DOUBLE PANE WINDOW 2x5	13.90	2.77	INSTALL DOUBLE PANE WINDOW	2.64	0.53
Residence- 197 Park Rd. (MORAINE)	4	32	0.82	3.50	EXISTING SINGLE/DOUBLE PANE WINDOW 2x4	4.94	0.99	INSTALL DOUBLE PANE WINDOW	0.94	0.19
Residence- 197 Park Rd. (MORAINE)	3	12	0.82	3.50	EXISTING SINGLE/DOUBLE PANE WINDOW 2x2	1.85	0.37	INSTALL DOUBLE PANE WINDOW	0.35	0.07
Residence- 197 Park Rd. (MORAINE)	1	36	0.82	3.50	EXISTING SINGLE/DOUBLE PANE WINDOW 9x4	5.56	1.11	INSTALL DOUBLE PANE WINDOW	1.06	0.21
Residence- 197 Park Rd. (MORAINE)	2	4	0.82	3.50	EXISTING SINGLE/DOUBLE PANE WINDOW 1x2	0.62	0.12	INSTALL DOUBLE PANE WINDOW	0.12	0.02
Residence- 197 Park Rd. (MORAINE)	7	42	0.82	3.50	EXISTING SINGLE/DOUBLE PANE WINDOW 2x3	6.49	1.29	INSTALL DOUBLE PANE WINDOW	1.23	0.25
Maintenance South Shore (MORAINE)	1	20	0.82	3.50	EXISTING SINGLE/DOUBLE PANE WINDOW 5x4	3.09	0.62	INSTALL DOUBLE PANE WINDOW	0.59	0.12
Maintenance South Shore (MORAINE)	2	36	0.82	3.50	EXISTING SINGLE/DOUBLE PANE WINDOW 6x3	5.56	1.11	INSTALL DOUBLE PANE WINDOW	1.06	0.21
Maintenance South Shore (MORAINE)	1	40	0.82	3.50	EXISTING SINGLE/DOUBLE PANE WINDOW 10x4	6.18	1.23	INSTALL DOUBLE PANE WINDOW	1.17	0.23

©2013 Energy Systems Group, LLC

	EXISTING CONDITIONS				PROPOSED UPGRADE		
BLD	Description	Existing Heat Loss (Btu/Hr/Ft)	Existing Heat Loss (MMBtu/Yr/Hr)	x	Description	Proposed Heat Loss (Btu/Hr/Ft)	Proposed Heat Loss (MMBtu/Yr/Hr)
Residence- 200 N. Shore Drive (MORAINE)	UNINSULATED 3/4 INCH COPPER PIPE	27.56	1.15		INSTALL NEW 3/4 INCH PIPE INSULATION	6.52	0.27
North Shore Maintenance (MORAINE)	UNINSULATED 3/4 INCH COPPER PIPE	27.56	1.84		INSTALL NEW 3/4 INCH PIPE INSULATION	6.52	0.44
Cabins 11 (MORAINE)	UNINSULATED 1/2 INCH COPPER PIPE	22.82	4.19		INSTALL NEW 1/2 INCH PIPE INSULATION	5.45	1.00
Water Treatment (MORAINE)	UNINSULATED 3/4 INCH COPPER PIPE	27.56	4.60		INSTALL NEW 3/4 INCH PIPE INSULATION	6.52	1.09
Marina Office/Garage (MORAINE)	UNINSULATED 3/4 INCH COPPER PIPE	27.56	1.15		INSTALL NEW 3/4 INCH PIPE INSULATION	6.52	0.27
Residence- 197 Park Rd. (MORAINE)	UNINSULATED 1/2 INCH COPPER PIPE	22.82	0.95		INSTALL NEW 1/2 INCH PIPE INSULATION	5.45	0.23
Residence- 300 Park Rd. (MORAINE)	UNINSULATED 3/4 INCH COPPER PIPE	27.56	1.15		INSTALL NEW 3/4 INCH PIPE INSULATION	6.52	0.27
Residence- 150 Park Rd. (MORAINE)	UNINSULATED 1/2 INCH COPPER PIPE	22.82	0.95		INSTALL NEW 1/2 INCH PIPE INSULATION	5.45	0.23
Maintenance South Shore (MORAINE)	UNINSULATED 3/4 INCH COPPER PIPE	27.56	1.84		INSTALL NEW 3/4 INCH PIPE INSULATION	6.52	0.44
Park Office (MORAINE)	UNINSULATED 3/4 INCH COPPER PIPE	27.56	1.15		INSTALL NEW 3/4 INCH PIPE INSULATION	6.52	0.27
105 Big Run (MORAINE)	UNINSULATED 3/4 INCH COPPER PIPE	27.56	1.84		INSTALL NEW 3/4 INCH PIPE INSULATION	6.52	0.44
Residence-"Greenhouse" by Park Office (MORAINE)	UNINSULATED 1/2 INCH COPPER PIPE	22.82	1.90		INSTALL NEW 1/2 INCH PIPE INSULATION	5.45	0.45
south first aid	UNINSULATED 1/2 INCH COPPER PIPE	22.82	3.81		INSTALL NEW 1/2 INCH PIPE INSULATION	5.45	0.91
concession	UNINSULATED 3/4 INCH COPPER PIPE	27.56	1.84		INSTALL NEW 3/4 INCH PIPE INSULATION	6.52	0.44
north concession	UNINSULATED 3/4 INCH COPPER PIPE	27.56	1.15		INSTALL NEW 3/4 INCH PIPE INSULATION	6.52	0.27
north shore lockers	UNINSULATED 3/4 INCH COPPER PIPE	27.56	1.38		INSTALL NEW 3/4 INCH PIPE INSULATION	6.52	0.33
north shore lockers	UNINSULATED 1 INCH COPPER PIPE	33.34	2.78		INSTALL NEW 1 INCH PIPE INSULATION	6.8	0.57
north shore lockers	UNINSULATED 3/4 INCH COPPER PIPE	27.56	0.69		INSTALL NEW 3/4 INCH PIPE INSULATION	6.52	0.16
first aid	UNINSULATED 3/4 INCH COPPER PIPE	27.56	1.84		INSTALL NEW 3/4 INCH PIPE INSULATION	6.52	0.44
davis hollow cabin	UNINSULATED 1/2 INCH COPPER PIPE	22.82	0.38		INSTALL NEW 1/2 INCH PIPE INSULATION	5.45	0.09
comfort station marina 1	UNINSULATED 3/4 INCH COPPER PIPE	27.56	1.15		INSTALL NEW 3/4 INCH PIPE INSULATION	6.52	0.27
comfort station marina 2	UNINSULATED 3/4 INCH COPPER PIPE	27.56	3.22		INSTALL NEW 3/4 INCH PIPE INSULATION	6.52	0.76

©2013 Energy Systems Group, LLC

PA STATE PARKS (OHIOPYLE)
DETAILED SCOPE OF WORK

Existing Condition	QTY	UOM	Proposed Improvement
ENTRY DOOR MAINTENANCE NEEDED.	70	EACH	PERFORM ENTRY DOOR MAINTENANCE
WORN OUT ENTRY DOOR WEATHERSTRIPPING	46	EACH	REPAIR/REPLACE WEATHERSTRIP ON ENTRY DOORS
WORN OUT ENTRY DOOR SWEEP	46	EACH	INSTALL SWEEPS ON ENTRY DOORS
WORN OUT INTERIOR DOOR WEATHERSTRIP	8	EACH	WEATHERSTRIP INTERIOR DOORS WHICH COMPARTMENTALIZE FLOORS, MECHANICAL ROOM AND ACCESS TO UNCONDITIONED AREAS
WORN OUT INTERIOR DOOR SWEEPS	8	EACH	INSTALL SWEEPS ON INTERIOR DOORS WHICH COMPARTMENTALIZE FLOORS, MECHANICAL ROOM AND ACCESS TO UNCONDITIONED AREAS
WORN OUT DOUBLE DOOR WEATHERSTRIPPING	8	EACH	REPAIR/REPLACE WEATHERSTRIP ON DOUBLE DOORS
WORN OUT DOUBLE DOOR SWEEP	8	EACH	INSTALL SWEEPS ON DOUBLE DOORS
WORN OUT GARAGE DOOR WEATHERSTRIP	12	EACH	REPLACE GARAGE DOOR WEATHERSTRIPPING
MISSING OR WORN AIR CONDITIONER SEALING	4	EACH	SEAL GAPS AROUND WINDOW AIR CONDITIONER
UNSEALED PENETRATIONS	1	EACH	SEAL PENETRATIONS AT VARIOUS LOCATIONS
THERMAX INSULATION	11	SQ FT.	RAISE R-VALUES USING THERMAX INSULATION

©2013 Energy Systems Group, LLC

Weatherization Line by Line

	EXISTING CONDITIONS									PROPOSED UPGRADE
BLD	QTY	Length (Ft)	Crack Width (in)	Crack Depth (in)	Total Area	Total Square Inches	CFM	BTU Loss	kWh Loss	Description
Visitor Center/Office (OHIOPYLE)	11	20	1/32	1	0.05	6.87	6.23	265.2	20	PERFORM ENTRY DOOR MAINTENANCE
Visitor Center/Office (OHIOPYLE)	2	3	1/6	1	0.01	1.00	0.91	38.6	3	INSTALL SWEEPS ON ENTRY DOORS
Visitor Center/Office (OHIOPYLE)	2	17	1/8	1	0.03	4.25	3.85	163.9	12	REPAIR/REPLACE WEATHERSTRIP ON ENTRY DOORS
Visitor Center/Office (OHIOPYLE)	3	3	1/6	1	0.01	1.50	1.36	57.9	4	INSTALL SWEEPS ON INTERIOR DOORS WHICH COMPARTMENTALIZE FLOORS, MECHANICAL ROOM AND ACCESS TO UNCONDITIONED AREAS
Visitor Center/Office (OHIOPYLE)	3	17	1/8	1	0.04	6.37	5.78	245.9	18	WEATHERSTRIP INTERIOR DOORS WHICH COMPARTMENTALIZE FLOORS, MECHANICAL ROOM AND ACCESS TO UNCONDITIONED AREAS
Visitor Center/Office (OHIOPYLE)	3	6	1/6	1	0.02	3.00	2.72	115.7	9	INSTALL SWEEPS ON DOUBLE DOORS
Visitor Center/Office (OHIOPYLE)	3	20	1/8	1	0.05	7.50	6.80	289.3	21	REPAIR/REPLACE WEATHERSTRIP ON DOUBLE DOORS
Train Station (OHIOPYLE)	4	20	1/32	1	0.02	2.50	2.27	96.4	7	PERFORM ENTRY DOOR MAINTENANCE
Train Station (OHIOPYLE)	4	3	1/6	1	0.01	2.00	1.81	77.1	6	INSTALL SWEEPS ON ENTRY DOORS
Train Station (OHIOPYLE)	4	17	1/8	1	0.06	8.50	7.70	327.9	24	REPAIR/REPLACE WEATHERSTRIP ON ENTRY DOORS
Residence- 2105 Mill Run Rd. (OHIOPYLE)	1	1	1/4	1	0.00	0.25	0.23	9.6	1	SEAL PENETRATIONS AT VARIOUS LOCATIONS
Residence- 2105 Mill Run Rd. (OHIOPYLE)	2	6	1/4	1	0.02	3.00	2.72	115.7	9	SEAL GAPS AROUND WINDOW AIR CONDITIONER
Residence- 2105 Mill Run Rd. (OHIOPYLE)	4	20	1/32	1	0.02	2.50	2.27	96.4	7	PERFORM ENTRY DOOR MAINTENANCE
Residence- 2105 Mill Run Rd. (OHIOPYLE)	3	3	1/6	1	0.01	1.50	1.36	57.9	4	INSTALL SWEEPS ON ENTRY DOORS
Residence- 2105 Mill Run Rd. (OHIOPYLE)	3	17	1/8	1	0.04	6.37	5.78	245.9	18	REPAIR/REPLACE WEATHERSTRIP ON ENTRY DOORS
Residence- 2105 Mill Run Rd. (OHIOPYLE)	1	3	1/6	1	0.00	0.50	0.45	19.3	1	INSTALL SWEEPS ON INTERIOR DOORS WHICH COMPARTMENTALIZE FLOORS, MECHANICAL ROOM AND ACCESS TO UNCONDITIONED AREAS
Residence- 2105 Mill Run Rd. (OHIOPYLE)	1	17	1/8	1	0.01	2.12	1.93	82.0	6	WEATHERSTRIP INTERIOR DOORS WHICH COMPARTMENTALIZE FLOORS, MECHANICAL ROOM AND ACCESS TO UNCONDITIONED AREAS
Residence- 150 King Rd. (OHIOPYLE)	4	20	1/32	1	0.02	2.50	2.93	124.8	9	PERFORM ENTRY DOOR MAINTENANCE

©2013 Energy Systems Group, LLC

Weatherization Line by Line

Residence- 150 King Rd. (OHIOPYLE)	2	3	1/6	1	0.01	1.00	1.17	49.9	4	INSTALL SWEEPS ON ENTRY DOORS
Residence- 150 King Rd. (OHIOPYLE)	2	17	1/8	1	0.03	4.25	4.99	212.2	16	REPAIR/REPLACE WEATHERSTRIP ON ENTRY DOORS
Residence- 150 King Rd. (OHIOPYLE)	1	6	1/6	1	0.01	1.00	1.17	49.9	4	INSTALL SWEEPS ON DOUBLE DOORS
Residence- 150 King Rd. (OHIOPYLE)	1	20	1/8	1	0.02	2.50	2.93	124.8	9	REPAIR/REPLACE WEATHERSTRIP ON DOUBLE DOORS
Stonehouse Inn- 180 Main St (OHIOPYLE)	2	20	1/32	1	0.01	1.25	1.47	62.4	5	PERFORM ENTRY DOOR MAINTENANCE
Stonehouse Inn- 180 Main St (OHIOPYLE)	2	3	1/6	1	0.01	1.00	1.17	49.9	4	INSTALL SWEEPS ON ENTRY DOORS
Stonehouse Inn- 180 Main St (OHIOPYLE)	2	17	1/8	1	0.03	4.25	4.99	212.2	16	REPAIR/REPLACE WEATHERSTRIP ON ENTRY DOORS
Stonehouse Inn- 180 Main St (OHIOPYLE)	1	6	1/4	1	0.01	1.50	1.76	74.9	6	SEAL GAPS AROUND WINDOW AIR CONDITIONER
Guided Boater Restroom (OHIOPYLE)	5	20	1/32	1	0.02	3.12	3.24	138.0	10	PERFORM ENTRY DOOR MAINTENANCE
Guided Boater Restroom (OHIOPYLE)	5	3	1/6	1	0.02	2.50	2.59	110.4	8	INSTALL SWEEPS ON ENTRY DOORS
Guided Boater Restroom (OHIOPYLE)	5	17	1/8	1	0.07	10.62	11.02	469.1	35	REPAIR/REPLACE WEATHERSTRIP ON ENTRY DOORS
Maintenance (OHIOPYLE)	5	20	1/32	1	0.02	3.12	2.83	120.5	9	PERFORM ENTRY DOOR MAINTENANCE
Maintenance (OHIOPYLE)	3	3	1/6	1	0.01	1.50	1.36	57.9	4	INSTALL SWEEPS ON ENTRY DOORS
Maintenance (OHIOPYLE)	3	17	1/8	1	0.04	6.37	5.78	245.9	18	REPAIR/REPLACE WEATHERSTRIP ON ENTRY DOORS
Maintenance (OHIOPYLE)	2	3	1/6	1	0.01	1.00	0.91	38.6	3	INSTALL SWEEPS ON INTERIOR DOORS WHICH COMPARTMENTALIZE FLOORS, MECHANICAL ROOM AND ACCESS TO UNCONDITIONED AREAS
Maintenance (OHIOPYLE)	2	17	1/8	1	0.03	4.25	3.85	163.9	12	WEATHERSTRIP INTERIOR DOORS WHICH COMPARTMENTALIZE FLOORS, MECHANICAL ROOM AND ACCESS TO UNCONDITIONED AREAS
Maintenance (OHIOPYLE)	10	42	1/4	1	0.73	105.00	95.16	4049.9	299	REPLACE GARAGE DOOR WEATHERSTRIPPING
Public Safety (OHIOPYLE)	3	20	1/32	1	0.01	1.87	2.20	93.6	7	PERFORM ENTRY DOOR MAINTENANCE
Public Safety (OHIOPYLE)	2	3	1/6	1	0.01	1.00	1.17	49.9	4	INSTALL SWEEPS ON ENTRY DOORS

©2013 Energy Systems Group, LLC

Weatherization Line by Line

Public Safety (OHIOPYLE)	2	17	1/8	1	0.03	4.25	4.99	212.2	16	REPAIR/REPLACE WEATHERSTRIP ON ENTRY DOORS
Public Safety (OHIOPYLE)	1	3	1/6	1	0.00	0.50	0.59	25.0	2	INSTALL SWEEPS ON INTERIOR DOORS WHICH COMPARTMENTALIZE FLOORS, MECHANICAL ROOM AND ACCESS TO UNCONDITIONED AREAS
Public Safety (OHIOPYLE)	1	17	1/8	1	0.01	2.12	2.49	106.1	8	WEATHERSTRIP INTERIOR DOORS WHICH COMPARTMENTALIZE FLOORS, MECHANICAL ROOM AND ACCESS TO UNCONDITIONED AREAS
Campground Contact Station (OHIOPYLE)	4	20	1/32	1	0.02	2.50	2.59	110.4	8	PERFORM ENTRY DOOR MAINTENANCE
Campground Contact Station (OHIOPYLE)	4	3	1/6	1	0.01	2.00	2.07	88.3	7	INSTALL SWEEPS ON ENTRY DOORS
Campground Contact Station (OHIOPYLE)	4	17	1/8	1	0.06	8.50	8.82	375.3	28	REPAIR/REPLACE WEATHERSTRIP ON ENTRY DOORS
Wellhouse (OHIOPYLE)	2	20	1/32	1	0.01	1.25	1.13	48.2	4	PERFORM ENTRY DOOR MAINTENANCE
Wellhouse (OHIOPYLE)	1	6	1/6	1	0.01	1.00	0.91	38.6	3	INSTALL SWEEPS ON DOUBLE DOORS
Wellhouse (OHIOPYLE)	1	20	1/8	1	0.02	2.50	2.27	96.4	7	REPAIR/REPLACE WEATHERSTRIP ON DOUBLE DOORS
Sewage (OHIOPYLE)	2	20	1/32	1	0.01	1.25	1.13	48.2	4	PERFORM ENTRY DOOR MAINTENANCE
Sewage (OHIOPYLE)	1	3	1/6	1	0.00	0.50	0.45	19.3	1	INSTALL SWEEPS ON ENTRY DOORS
Sewage (OHIOPYLE)	1	17	1/8	1	0.01	2.12	1.93	82.0	6	REPAIR/REPLACE WEATHERSTRIP ON ENTRY DOORS
Sewage (OHIOPYLE)	1	3	1/6	1	0.00	0.50	0.45	19.3	1	INSTALL SWEEPS ON INTERIOR DOORS WHICH COMPARTMENTALIZE FLOORS, MECHANICAL ROOM AND ACCESS TO UNCONDITIONED AREAS
Sewage (OHIOPYLE)	1	17	1/8	1	0.01	2.12	1.93	82.0	6	WEATHERSTRIP INTERIOR DOORS WHICH COMPARTMENTALIZE FLOORS, MECHANICAL ROOM AND ACCESS TO UNCONDITIONED AREAS
Sewage (OHIOPYLE)	1	42	1/4	1	0.07	10.50	9.52	405.0	30	REPLACE GARAGE DOOR WEATHERSTRIPPING
Sewage (OHIOPYLE)	1	6	1/4	1	0.01	1.50	1.36	57.9	4	SEAL GAPS AROUND WINDOW AIR CONDITIONER
Showerhouse (OHIOPYLE)	6	20	1/32	1	0.03	3.75	3.40	144.6	11	PERFORM ENTRY DOOR MAINTENANCE
Showerhouse (OHIOPYLE)	6	3	1/6	1	0.02	3.00	2.72	115.7	9	INSTALL SWEEPS ON ENTRY DOORS
Showerhouse (OHIOPYLE)	6	17	1/8	1	0.09	12.75	11.56	491.8	36	REPAIR/REPLACE WEATHERSTRIP ON ENTRY DOORS

©2013 Energy Systems Group, LLC

Weatherization Line by Line

Cabins 7 (OHIOPYLE)	7	20	1/32	1	0.03	4.37	3.97	168.7	12		PERFORM ENTRY DOOR MAINTENANCE
Cabins 7 (OHIOPYLE)	7	3	1/6	1	0.02	3.50	3.17	135.0	10		INSTALL SWEEPS ON ENTRY DOORS
Cabins 7 (OHIOPYLE)	7	17	1/8	1	0.10	14.87	13.48	573.7	42		REPAIR/REPLACE WEATHERSTRIP ON ENTRY DOORS
Photos/River Rescue (OHIOPYLE)	11	20	1/32	1	0.05	6.87	6.23	265.2	20		PERFORM ENTRY DOOR MAINTENANCE
Photos/River Rescue (OHIOPYLE)	5	3	1/6	1	0.02	2.50	2.27	96.4	7		INSTALL SWEEPS ON ENTRY DOORS
Photos/River Rescue (OHIOPYLE)	5	17	1/8	1	0.07	10.62	9.63	409.8	30		REPAIR/REPLACE WEATHERSTRIP ON ENTRY DOORS
Photos/River Rescue (OHIOPYLE)	3	6	1/6	1	0.02	3.00	2.72	115.7	9		INSTALL SWEEPS ON DOUBLE DOORS
Photos/River Rescue (OHIOPYLE)	3	20	1/8	1	0.05	7.50	6.80	289.3	21		REPAIR/REPLACE WEATHERSTRIP ON DOUBLE DOORS
Photos/River Rescue (OHIOPYLE)	1	42	1/4	1	0.07	10.50	9.52	405.0	30		REPLACE GARAGE DOOR WEATHERSTRIPPING

©2013 Energy Systems Group, LLC

Insulation Line by Line

BLD	Sq Ft Needed	EXISTING CONDITIONS Existing R Value	Proposed R Value	Description	Current Heating MMBTU's	Current Cooling MMBTU's	PROPOSED UPGRADE Description	Proposed Heating MMBTU's	Proposed Cooling MMBTU's	Notes	SAVINGS Heat Savings in Therms	Cooling Savings in kWh
Wellhouse (OHOPYLE)	11	0.83	7.00	THERMAX INSULATION	0.63	0.22	RAISE R-VALUES USING THERMAX INSULATION	0.07	0.03		5.53	-

PA STATE PARKS (OIL CREEK)
DETAILED SCOPE OF WORK

Existing Condition	QTY	UOM	Proposed Improvement
ENTRY DOOR MAINTENANCE NEEDED.	17	EACH	PERFORM ENTRY DOOR MAINTENANCE
WORN OUT ENTRY DOOR WEATHERSTRIPPING	14	EACH	REPAIR/REPLACE WEATHERSTRIP ON ENTRY DOORS
WORN OUT ENTRY DOOR SWEEP	14	EACH	INSTALL SWEEPS ON ENTRY DOORS
WORN OUT INTERIOR DOOR WEATHERSTRIP	1	EACH	WEATHERSTRIP INTERIOR DOORS WHICH COMPARTMENTALIZE FLOORS, MECHANICAL ROOM AND ACCESS TO UNCONDITIONED AREAS
WORN OUT INTERIOR DOOR SWEEPS	1	EACH	INSTALL SWEEPS ON INTERIOR DOORS WHICH COMPARTMENTALIZE FLOORS, MECHANICAL ROOM AND ACCESS TO UNCONDITIONED AREAS
WORN OUT DOUBLE DOOR WEATHERSTRIPPING	1	LN FT.	REPAIR/REPLACE WEATHERSTRIP ON DOUBLE DOORS
WORN OUT DOUBLE DOOR SWEEP	1	EACH	INSTALL SWEEPS ON DOUBLE DOORS
WORN OUT GARAGE DOOR WEATHERSTRIP	2	LN FT.	REPLACE GARAGE DOOR WEATHERSTRIPPING

©2013 Energy Systems Group, LLC

Weatherization Line by Line

	EXISTING CONDITIONS									PROPOSED UPGRADE
BLD	QTY	Length (Ft)	Crack Width (in)	Crack Depth (in)	Total Area	Total Square Inches	CFM	BTU Loss	kWh Loss	Description
Park Office/Education Center (OIL CREEK)	6	20	1/32	1	0.03	3.75	3.63	128.3	8	PERFORM ENTRY DOOR MAINTENANCE
Park Office/Education Center (OIL CREEK)	6	3	1/6	1	0.02	3.00	2.91	102.7	6	INSTALL SWEEPS ON ENTRY DOORS
Park Office/Education Center (OIL CREEK)	6	17	1/8	1	0.09	12.75	12.35	436.4	27	REPAIR/REPLACE WEATHERSTRIP ON ENTRY DOORS
Pumphouse (OIL CREEK)	1	20	1/32	1	0.00	0.62	0.52	18.3	1	PERFORM ENTRY DOOR MAINTENANCE
Pumphouse (OIL CREEK)	1	3	1/6	1	0.00	0.50	0.41	14.6	1	INSTALL SWEEPS ON ENTRY DOORS
Pumphouse (OIL CREEK)	1	17	1/8	1	0.01	2.12	1.76	62.1	4	REPAIR/REPLACE WEATHERSTRIP ON ENTRY DOORS
Train Station (OIL CREEK)	4	20	1/32	1	0.02	2.50	2.07	73.0	4	PERFORM ENTRY DOOR MAINTENANCE
Train Station (OIL CREEK)	2	3	1/6	1	0.01	1.00	0.83	29.2	2	INSTALL SWEEPS ON ENTRY DOORS
Train Station (OIL CREEK)	2	17	1/8	1	0.03	4.25	3.51	124.1	8	REPAIR/REPLACE WEATHERSTRIP ON ENTRY DOORS
Train Station (OIL CREEK)	1	6	1/6	1	0.01	1.00	0.83	29.2	2	INSTALL SWEEPS ON DOUBLE DOORS
Train Station (OIL CREEK)	1	20	1/8	1	0.02	2.50	2.07	73.0	4	REPAIR/REPLACE WEATHERSTRIP ON DOUBLE DOORS
Maintenance & Water Storage (OIL CREEK)	3	20	1/32	1	0.01	1.87	1.66	58.7	4	PERFORM ENTRY DOOR MAINTENANCE
Maintenance & Water Storage (OIL CREEK)	2	3	1/6	1	0.01	1.00	0.89	31.3	2	INSTALL SWEEPS ON ENTRY DOORS
Maintenance & Water Storage (OIL CREEK)	2	17	1/8	1	0.03	4.25	3.77	133.1	8	REPAIR/REPLACE WEATHERSTRIP ON ENTRY DOORS
Maintenance & Water Storage (OIL CREEK)	1	3	1/6	1	0.00	0.50	0.44	15.7	1	INSTALL SWEEPS ON INTERIOR DOORS WHICH COMPARTMENTALIZE FLOORS, MECHANICAL ROOM AND ACCESS TO UNCONDITIONED AREAS
Maintenance & Water Storage (OIL CREEK)	1	17	1/8	1	0.01	2.12	1.88	66.6	4	WEATHERSTRIP INTERIOR DOORS WHICH COMPARTMENTALIZE FLOORS, MECHANICAL ROOM AND ACCESS TO UNCONDITIONED AREAS
Maintenance & Water Storage (OIL CREEK)	2	30	1/4	1	0.10	15.00	13.30	469.9	29	REPLACE GARAGE DOOR WEATHERSTRIPPING
Residence- by Maintenance (OIL CREEK)	3	20	1/32	1	0.01	1.87	2.13	75.4	5	PERFORM ENTRY DOOR MAINTENANCE

©2013 Energy Systems Group, LLC

Weatherization Line by Line

Residence- by Maintenance (OIL CREEK)	3	3	1/6	1	0.01	1.50	1.71	60.3	4	INSTALL SWEEPS ON ENTRY DOORS
Residence- by Maintenance (OIL CREEK)	3	17	1/8	1	0.04	6.37	7.25	256.3	16	REPAIR/REPLACE WEATHERSTRIP ON ENTRY DOORS

©2013 Energy Systems Group, LLC

PA STATE PARKS (PIONT STATE)
DETAILED SCOPE OF WORK

Existing Condition	QTY	UOM	Proposed Improvement
ENTRY DOOR MAINTENANCE NEEDED.	16	EACH	PERFORM ENTRY DOOR MAINTENANCE
WORN OUT ENTRY DOOR WEATHERSTRIPPING	11	EACH	REPAIR/REPLACE WEATHERSTRIP ON ENTRY DOORS
WORN OUT ENTRY DOOR SWEEP	11	EACH	INSTALL SWEEPS ON ENTRY DOORS
WORN OUT INTERIOR DOOR WEATHERSTRIP	3	EACH	WEATHERSTRIP INTERIOR DOORS WHICH COMPARTMENTALIZE FLOORS, MECHANICAL ROOM AND ACCESS TO UNCONDITIONED AREAS
WORN OUT INTERIOR DOOR SWEEPS	3	EACH	INSTALL SWEEPS ON INTERIOR DOORS WHICH COMPARTMENTALIZE FLOORS, MECHANICAL ROOM AND ACCESS TO UNCONDITIONED AREAS
WORN OUT DOUBLE DOOR WEATHERSTRIPPING	1	EACH	REPAIR/REPLACE WEATHERSTRIP ON DOUBLE DOORS
WORN OUT DOUBLE DOOR SWEEP	1	EACH	INSTALL SWEEPS ON DOUBLE DOORS
WORN OUT GARAGE DOOR WEATHERSTRIP	2	EACH	REPLACE GARAGE DOOR WEATHERSTRIPPING

©2013 Energy Systems Group, LLC

Weatherization Line by Line

	EXISTING CONDITIONS									PROPOSED UPGRADE
BLD	QTY	Length (Ft)	Crack Width (in)	Crack Depth (in)	Total Area	Total Square Inches	CFM	BTU Loss	kWh Loss	Description
Office/Ranger Station (POINT STATE)	3	20	1/32	1	0.01	1.87	2.20	93.6	7	PERFORM ENTRY DOOR MAINTENANCE
Office/Ranger Station (POINT STATE)	2	3	1/6	1	0.01	1.00	1.17	49.9	4	INSTALL SWEEPS ON ENTRY DOORS
Office/Ranger Station (POINT STATE)	2	17	1/8	1	0.03	4.25	4.99	212.2	16	REPAIR/REPLACE WEATHERSTRIP ON ENTRY DOORS
Office/Ranger Station (POINT STATE)	2	32	1/4	1	0.11	16.00	18.77	799.0	59	REPLACE GARAGE DOOR WEATHERSTRIPPING
Office/Ranger Station (POINT STATE)	1	3	1/6	1	0.00	0.50	0.59	25.0	2	INSTALL SWEEPS ON INTERIOR DOORS WHICH COMPARTMENTALIZE FLOORS, MECHANICAL ROOM AND ACCESS TO UNCONDITIONED AREAS
Office/Ranger Station (POINT STATE)	1	17	1/8	1	0.01	2.12	2.49	106.1	8	WEATHERSTRIP INTERIOR DOORS WHICH COMPARTMENTALIZE FLOORS, MECHANICAL ROOM AND ACCESS TO UNCONDITIONED AREAS
Pump House (POINT STATE)	5	20	1/32	1	0.02	3.12	3.24	138.0	10	PERFORM ENTRY DOOR MAINTENANCE
Pump House (POINT STATE)	4	3	1/6	1	0.01	2.00	2.07	88.3	7	INSTALL SWEEPS ON ENTRY DOORS
Pump House (POINT STATE)	4	17	1/8	1	0.06	8.50	8.82	375.3	28	REPAIR/REPLACE WEATHERSTRIP ON ENTRY DOORS
Pump House (POINT STATE)	1	3	1/6	1	0.00	0.50	0.52	22.1	2	INSTALL SWEEPS ON INTERIOR DOORS WHICH COMPARTMENTALIZE FLOORS, MECHANICAL ROOM AND ACCESS TO UNCONDITIONED AREAS
Pump House (POINT STATE)	1	17	1/8	1	0.01	2.12	2.20	93.8	7	WEATHERSTRIP INTERIOR DOORS WHICH COMPARTMENTALIZE FLOORS, MECHANICAL ROOM AND ACCESS TO UNCONDITIONED AREAS
Restroom (POINT STATE)	5	20	1/32	1	0.02	3.12	2.91	124.0	9	PERFORM ENTRY DOOR MAINTENANCE
Restroom (POINT STATE)	4	3	1/6	1	0.01	2.00	1.86	79.3	6	INSTALL SWEEPS ON ENTRY DOORS
Restroom (POINT STATE)	4	17	1/8	1	0.06	8.50	7.92	337.1	25	REPAIR/REPLACE WEATHERSTRIP ON ENTRY DOORS
Restroom (POINT STATE)	1	3	1/6	1	0.00	0.50	0.47	19.8	1	INSTALL SWEEPS ON INTERIOR DOORS WHICH COMPARTMENTALIZE FLOORS, MECHANICAL ROOM AND ACCESS TO UNCONDITIONED AREAS
Restroom (POINT STATE)	1	17	1/8	1	0.01	2.12	1.98	84.3	6	WEATHERSTRIP INTERIOR DOORS WHICH COMPARTMENTALIZE FLOORS, MECHANICAL ROOM AND ACCESS TO UNCONDITIONED AREAS
Concession (POINT STATE)	3	20	1/32	1	0.01	1.87	1.75	74.4	5	PERFORM ENTRY DOOR MAINTENANCE
Concession (POINT STATE)	1	3	1/6	1	0.00	0.50	0.47	19.8	1	INSTALL SWEEPS ON ENTRY DOORS

©2013 Energy Systems Group, LLC

Weatherization Line by Line

Concession (POINT STATE)	1	17	1/8	1	0.01	2.12	1.98	84.3	6	REPAIR/REPLACE WEATHERSTRIP ON ENTRY DOORS
Concession (POINT STATE)	1	6	1/6	1	0.01	1.00	0.93	39.7	3	INSTALL SWEEPS ON DOUBLE DOORS
Concession (POINT STATE)	1	20	1/8	1	0.02	2.50	2.33	99.2	7	REPAIR/REPLACE WEATHERSTRIP ON DOUBLE DOORS

©2013 Energy Systems Group, LLC

PA STATE PARKS (PRESQUE ISLE)
DETAILED SCOPE OF WORK

Existing Condition	QTY	UOM	Proposed Improvement
BLOWER DOOR PRE/POST TESTS NEEDED FOR M&V	3	EACH	PROVIDE A PRE-BLOWER DOOR TEST TO ESTABLISH A BASELINE FOR AIR SEALING
ENTRY DOOR MAINTENANCE NEEDED.	112	EACH	PERFORM ENTRY DOOR MAINTENANCE
WORN OUT ENTRY DOOR WEATHERSTRIPPING	52	EACH	REPAIR/REPLACE WEATHERSTRIP ON ENTRY DOORS
WORN OUT ENTRY DOOR SWEEP	43	EACH	INSTALL SWEEPS ON ENTRY DOORS
WORN OUT INTERIOR DOOR WEATHERSTRIP	33	EACH	WEATHERSTRIP INTERIOR DOORS WHICH COMPARTMENTALIZE FLOORS, MECHANICAL ROOM AND ACCESS TO UNCONDITIONED AREAS
WORN OUT INTERIOR DOOR SWEEPS	33	EACH	INSTALL SWEEPS ON INTERIOR DOORS WHICH COMPARTMENTALIZE FLOORS, MECHANICAL ROOM AND ACCESS TO UNCONDITIONED AREAS
WORN OUT DOUBLE DOOR WEATHERSTRIPPING	16	EACH	REPAIR/REPLACE WEATHERSTRIP ON DOUBLE DOORS
WORN OUT DOUBLE DOOR SWEEP	16	EACH	INSTALL SWEEPS ON DOUBLE DOORS
WORN OUT GARAGE DOOR WEATHERSTRIP	9	EACH	REPLACE GARAGE DOOR WEATHERSTRIPPING
MISSING OR WORN AIR CONDITIONER SEALING	2	EACH	SEAL GAPS AROUND WINDOW AIR CONDITIONER
WALL JOINTS SEAL	50	LN FT.	SEAL EXTERIOR WALL JOINTS
EXISTING ROOF WALL GAPS - INTERIOR	1250	LN FT.	SEAL INTERIOR ROOF/WALL INTERSECTION
MISSING OR AGED BLOWN-IN INSULATION	1600	SQ FT.	RAISE R-VALUES USING BLOWN-IN OR LOOSE FILL INSULATION
MISSING OR AGED BATT INSULATION	910	SQ FT.	RAISE R-VALUES USING BATT INSULATION
THERMAX INSULATION	1060	EACH	RAISE R-VALUES USING THERMAX INSULATION

©2013 Energy Systems Group, LLC

Weatherization Line by Line

	EXISTING CONDITIONS									PROPOSED UPGRADE
BLD	QTY	Length (Ft)	Crack Width (in)	Crack Depth (in)	Total Area	Total Square Inches	CFM	BTU Loss	kWh Loss	Description
Tom Ridge Center (PRESQUE ISLE)	36	20	1/32	1	0.16	22.50	30.14	987.5	#N/A	PERFORM ENTRY DOOR MAINTENANCE
Tom Ridge Center (PRESQUE ISLE)	7	3	1/6	1	0.02	3.50	4.69	153.6	#N/A	INSTALL SWEEPS ON ENTRY DOORS
Tom Ridge Center (PRESQUE ISLE)	10	17	1/8	1	0.15	21.25	28.47	932.7	#N/A	REPAIR/REPLACE WEATHERSTRIP ON ENTRY DOORS
Tom Ridge Center (PRESQUE ISLE)	14	3	1/6	1	0.05	7.00	9.38	307.2	#N/A	INSTALL SWEEPS ON INTERIOR DOORS WHICH COMPARTMENTALIZE FLOORS, MECHANICAL ROOM AND ACCESS TO UNCONDITIONED AREAS
Tom Ridge Center (PRESQUE ISLE)	14	17	1/8	1	0.21	29.75	39.85	1305.8	#N/A	WEATHERSTRIP INTERIOR DOORS WHICH COMPARTMENTALIZE FLOORS, MECHANICAL ROOM AND ACCESS TO UNCONDITIONED AREAS
Tom Ridge Center (PRESQUE ISLE)	6	6	1/6	1	0.04	6.00	8.04	263.3	#N/A	INSTALL SWEEPS ON DOUBLE DOORS
Tom Ridge Center (PRESQUE ISLE)	6	20	1/8	1	0.10	15.00	20.09	658.4	#N/A	REPAIR/REPLACE WEATHERSTRIP ON DOUBLE DOORS
Tom Ridge Center (PRESQUE ISLE)	1	42	1/4	1	0.07	10.50	14.07	460.9	#N/A	REPLACE GARAGE DOOR WEATHERSTRIPPING
Tom Ridge Center (PRESQUE ISLE)	800	1	2	1	11.11	1599.99	2143.26	70225.6	#N/A	SEAL INTERIOR ROOF/WALL INTERSECTION
Tom Ridge Center (PRESQUE ISLE)	3			1	0.00	0.00	0.00	0.0	#N/A	PROVIDE A PRE-BLOWER DOOR TEST TO ESTABLISH A BASELINE FOR AIR SEALING
Stull Interpretive Center (PRESQUE ISLE)	6	20	1/32	1	0.03	3.75	4.17	136.6	#N/A	PERFORM ENTRY DOOR MAINTENANCE
Stull Interpretive Center (PRESQUE ISLE)	1	3	1/6	1	0.00	0.50	0.56	18.2	#N/A	INSTALL SWEEPS ON INTERIOR DOORS WHICH COMPARTMENTALIZE FLOORS, MECHANICAL ROOM AND ACCESS TO UNCONDITIONED AREAS
Stull Interpretive Center (PRESQUE ISLE)	1	17	1/8	1	0.01	2.12	2.36	77.4	#N/A	WEATHERSTRIP INTERIOR DOORS WHICH COMPARTMENTALIZE FLOORS, MECHANICAL ROOM AND ACCESS TO UNCONDITIONED AREAS
Stull Interpretive Center (PRESQUE ISLE)	1	6	1/6	1	0.01	1.00	1.11	36.4	#N/A	INSTALL SWEEPS ON DOUBLE DOORS
Stull Interpretive Center (PRESQUE ISLE)	1	20	1/8	1	0.02	2.50	2.78	91.1	#N/A	REPAIR/REPLACE WEATHERSTRIP ON DOUBLE DOORS
Stull Interpretive Center (PRESQUE ISLE)	3	3	1/8	1	0.01	1.12	1.25	41.0	#N/A	REPAIR/REPLACE WEATHERSTRIP ON ENTRY DOORS
Stull Interpretive Center (PRESQUE ISLE)	3	17	1/8	1	0.04	6.37	7.09	232.3	#N/A	REPAIR/REPLACE WEATHERSTRIP ON ENTRY DOORS
Ranger Station (PRESQUE ISLE)	2	42	1/4	1	0.15	21.00	25.65	840.4	#N/A	REPLACE GARAGE DOOR WEATHERSTRIPPING

©2013 Energy Systems Group, LLC

Weatherization Line by Line

Ranger Station (PRESQUE ISLE)	10	20	1/32	1	0.04	6.25	7.63	250.1	#N/A	PERFORM ENTRY DOOR MAINTENANCE
Ranger Station (PRESQUE ISLE)	3	3	1/6	1	0.01	1.50	1.83	60.0	#N/A	INSTALL SWEEPS ON INTERIOR DOORS WHICH COMPARTMENTALIZE FLOORS, MECHANICAL ROOM AND ACCESS TO UNCONDITIONED AREAS
Ranger Station (PRESQUE ISLE)	3	17	1/8	1	0.04	6.37	7.79	255.1	#N/A	WEATHERSTRIP INTERIOR DOORS WHICH COMPARTMENTALIZE FLOORS, MECHANICAL ROOM AND ACCESS TO UNCONDITIONED AREAS
Ranger Station (PRESQUE ISLE)	7	3	1/6	1	0.02	3.50	4.27	140.1	#N/A	INSTALL SWEEPS ON ENTRY DOORS
Ranger Station (PRESQUE ISLE)	7	17	1/8	1	0.10	14.87	18.17	595.3	#N/A	REPAIR/REPLACE WEATHERSTRIP ON ENTRY DOORS
Niagra Restroom (PRESQUE ISLE)	3	20	1/32	1	0.01	1.87	2.09	68.3	#N/A	PERFORM ENTRY DOOR MAINTENANCE
Niagra Restroom (PRESQUE ISLE)	3	3	1/6	1	0.01	1.50	1.67	54.7	#N/A	INSTALL SWEEPS ON ENTRY DOORS
Niagra Restroom (PRESQUE ISLE)	3	17	1/8	1	0.04	6.37	7.09	232.3	#N/A	REPAIR/REPLACE WEATHERSTRIP ON ENTRY DOORS
Marina Bath house (PRESQUE ISLE)	8	20	1/32	1	0.03	5.00	5.56	182.2	#N/A	PERFORM ENTRY DOOR MAINTENANCE
Marina Bath house (PRESQUE ISLE)	8	3	1/6	1	0.03	4.00	4.45	145.8	#N/A	INSTALL SWEEPS ON ENTRY DOORS
Marina Bath house (PRESQUE ISLE)	8	17	1/8	1	0.12	17.00	18.91	619.4	#N/A	REPAIR/REPLACE WEATHERSTRIP ON ENTRY DOORS
Marina Office (PRESQUE ISLE)	8	20	1/32	1	0.03	5.00	6.11	200.1	#N/A	PERFORM ENTRY DOOR MAINTENANCE
Marina Office (PRESQUE ISLE)	2	3	1/6	1	0.01	1.00	1.22	40.0	#N/A	INSTALL SWEEPS ON ENTRY DOORS
Marina Office (PRESQUE ISLE)	2	17	1/8	1	0.03	4.25	5.19	170.1	#N/A	REPAIR/REPLACE WEATHERSTRIP ON ENTRY DOORS
Marina Office (PRESQUE ISLE)	4	3	1/6	1	0.01	2.00	2.44	80.0	#N/A	INSTALL SWEEPS ON INTERIOR DOORS WHICH COMPARTMENTALIZE FLOORS, MECHANICAL ROOM AND ACCESS TO UNCONDITIONED AREAS
Marina Office (PRESQUE ISLE)	4	17	1/8	1	0.06	8.50	10.38	340.2	#N/A	WEATHERSTRIP INTERIOR DOORS WHICH COMPARTMENTALIZE FLOORS, MECHANICAL ROOM AND ACCESS TO UNCONDITIONED AREAS
Marina Office (PRESQUE ISLE)	1	30	1/4	1	0.05	7.50	9.16	300.1	#N/A	REPLACE GARAGE DOOR WEATHERSTRIPPING
Marina Office (PRESQUE ISLE)	1	6	1/6	1	0.01	1.00	1.22	40.0	#N/A	INSTALL SWEEPS ON DOUBLE DOORS
Marina Office (PRESQUE ISLE)	1	20	1/8	1	0.02	2.50	3.05	100.0	#N/A	REPAIR/REPLACE WEATHERSTRIP ON DOUBLE DOORS

©2013 Energy Systems Group, LLC

Weatherization Line by Line

Scenice Restroom (PRESQUE ISLE)	1	20	1/32	1	0.00	0.62	0.76	25.0	#N/A	PERFORM ENTRY DOOR MAINTENANCE
Scenice Restroom (PRESQUE ISLE)	1	3	1/6	1	0.00	0.50	0.61	20.0	#N/A	INSTALL SWEEPS ON ENTRY DOORS
Scenice Restroom (PRESQUE ISLE)	1	17	1/8	1	0.01	2.12	2.60	85.0	#N/A	REPAIR/REPLACE WEATHERSTRIP ON ENTRY DOORS
Maintenance (PRESQUE ISLE)	11	20	1/32	1	0.05	6.87	9.26	303.4	#N/A	PERFORM ENTRY DOOR MAINTENANCE
Maintenance (PRESQUE ISLE)	8	3	1/6	1	0.03	4.00	5.39	176.5	#N/A	INSTALL SWEEPS ON ENTRY DOORS
Maintenance (PRESQUE ISLE)	8	17	1/8	1	0.12	17.00	22.89	750.1	#N/A	REPAIR/REPLACE WEATHERSTRIP ON ENTRY DOORS
Maintenance (PRESQUE ISLE)	3	3	1/6	1	0.01	1.50	2.02	66.2	#N/A	INSTALL SWEEPS ON INTERIOR DOORS WHICH COMPARTMENTALIZE FLOORS, MECHANICAL ROOM AND ACCESS TO UNCONDITIONED AREAS
Maintenance (PRESQUE ISLE)	3	17	1/8	1	0.04	6.37	8.59	281.3	#N/A	WEATHERSTRIP INTERIOR DOORS WHICH COMPARTMENTALIZE FLOORS, MECHANICAL ROOM AND ACCESS TO UNCONDITIONED AREAS
Maintenance (PRESQUE ISLE)	5	42	1/4	1	0.36	52.50	70.70	2316.6	#N/A	REPLACE GARAGE DOOR WEATHERSTRIPPING
Maintenance (PRESQUE ISLE)	450	1	1	1	3.12	450.00	606.03	19856.9	#N/A	SEAL INTERIOR ROOF/WALL INTERSECTION
Maintenance (PRESQUE ISLE)	2	6	1/4	1	0.02	3.00	4.04	132.4	#N/A	SEAL GAPS AROUND WINDOW AIR CONDITIONER
Lighthouse (PRESQUE ISLE)	3	20	1/32	1	0.01	1.87	2.53	82.7	#N/A	PERFORM ENTRY DOOR MAINTENANCE
Lighthouse (PRESQUE ISLE)	1	3	1/6	1	0.00	0.50	0.67	22.1	#N/A	INSTALL SWEEPS ON ENTRY DOORS
Lighthouse (PRESQUE ISLE)	1	17	1/8	1	0.01	2.12	2.86	93.8	#N/A	REPAIR/REPLACE WEATHERSTRIP ON ENTRY DOORS
Lighthouse (PRESQUE ISLE)	2	6	1/6	1	0.01	2.00	2.69	88.3	#N/A	INSTALL SWEEPS ON DOUBLE DOORS
Lighthouse (PRESQUE ISLE)	2	20	1/8	1	0.03	5.00	6.73	220.6	#N/A	REPAIR/REPLACE WEATHERSTRIP ON DOUBLE DOORS
Lighthouse (PRESQUE ISLE)	50	1	1/32	1	0.01	1.56	2.10	68.9	#N/A	SEAL EXTERIOR WALL JOINTS
Water Work Rotery (PRESQUE ISLE)	17	20	1/32	1	0.07	10.62	12.98	425.2	#N/A	PERFORM ENTRY DOOR MAINTENANCE
Water Work Rotery (PRESQUE ISLE)	6	6	1/6	1	0.04	6.00	7.33	240.1	#N/A	INSTALL SWEEPS ON DOUBLE DOORS

©2013 Energy Systems Group, LLC

Weatherization Line by Line

Water Work Rotery (PRESQUE ISLE)	6	20	1/8	1	0.10	15.00	18.32	600.3	#N/A	REPAIR/REPLACE WEATHERSTRIP ON DOUBLE DOORS
Water Work Rotery (PRESQUE ISLE)	5	3	1/6	1	0.02	2.50	3.05	100.0	#N/A	INSTALL SWEEPS ON INTERIOR DOORS WHICH COMPARTMENTALIZE FLOORS, MECHANICAL ROOM AND ACCESS TO UNCONDITIONED AREAS
Water Work Rotery (PRESQUE ISLE)	5	17	1/8	1	0.07	10.62	12.98	425.2	#N/A	WEATHERSTRIP INTERIOR DOORS WHICH COMPARTMENTALIZE FLOORS, MECHANICAL ROOM AND ACCESS TO UNCONDITIONED AREAS
Residence- 2514 North Tracy (PRESQUE ISLE)	2	20	1/32	1	0.01	1.25	1.59	52.1	#N/A	PERFORM ENTRY DOOR MAINTENANCE
Residence- 2514 North Tracy (PRESQUE ISLE)	1	3	1/6	1	0.00	0.50	0.64	20.9	#N/A	INSTALL SWEEPS ON ENTRY DOORS
Residence- 2514 North Tracy (PRESQUE ISLE)	1	17	1/8	1	0.01	2.12	2.71	88.6	#N/A	REPAIR/REPLACE WEATHERSTRIP ON ENTRY DOORS
Residence- 2514 North Tracy (PRESQUE ISLE)	1	3	1/6	1	0.00	0.50	0.64	20.9	#N/A	INSTALL SWEEPS ON INTERIOR DOORS WHICH COMPARTMENTALIZE FLOORS, MECHANICAL ROOM AND ACCESS TO UNCONDITIONED AREAS
Residence- 2514 North Tracy (PRESQUE ISLE)	1	17	1/8	1	0.01	2.12	2.71	88.6	#N/A	WEATHERSTRIP INTERIOR DOORS WHICH COMPARTMENTALIZE FLOORS, MECHANICAL ROOM AND ACCESS TO UNCONDITIONED AREAS
Residence- 1137 Dutch (PRESQUE ISLE)	3	20	1/32	1	0.01	1.87	2.39	78.2	#N/A	PERFORM ENTRY DOOR MAINTENANCE
Residence- 1137 Dutch (PRESQUE ISLE)	2	3	1/6	1	0.01	1.00	1.27	41.7	#N/A	INSTALL SWEEPS ON ENTRY DOORS
Residence- 1137 Dutch (PRESQUE ISLE)	2	17	1/8	1	0.03	4.25	5.41	177.3	#N/A	REPAIR/REPLACE WEATHERSTRIP ON ENTRY DOORS
Residence- 1137 Dutch (PRESQUE ISLE)	1	3	1/6	1	0.00	0.50	0.64	20.9	#N/A	INSTALL SWEEPS ON INTERIOR DOORS WHICH COMPARTMENTALIZE FLOORS, MECHANICAL ROOM AND ACCESS TO UNCONDITIONED AREAS
Residence- 1137 Dutch (PRESQUE ISLE)	1	17	1/8	1	0.01	2.12	2.71	88.6	#N/A	WEATHERSTRIP INTERIOR DOORS WHICH COMPARTMENTALIZE FLOORS, MECHANICAL ROOM AND ACCESS TO UNCONDITIONED AREAS
Residence-8075 West Lake (PRESQUE ISLE)	4	20	1/32	1	0.02	2.50	3.18	104.3	#N/A	PERFORM ENTRY DOOR MAINTENANCE
Residence-8075 West Lake (PRESQUE ISLE)	3	3	1/6	1	0.01	1.50	1.91	62.6	#N/A	INSTALL SWEEPS ON ENTRY DOORS
Residence-8075 West Lake (PRESQUE ISLE)	3	17	1/8	1	0.04	6.37	8.12	265.9	#N/A	REPAIR/REPLACE WEATHERSTRIP ON ENTRY DOORS
Residence-8075 West Lake (PRESQUE ISLE)	1	3	1/6	1	0.00	0.50	0.64	20.9	#N/A	INSTALL SWEEPS ON INTERIOR DOORS WHICH COMPARTMENTALIZE FLOORS, MECHANICAL ROOM AND ACCESS TO UNCONDITIONED AREAS
Residence-8075 West Lake (PRESQUE ISLE)	1	17	1/8	1	0.01	2.12	2.71	88.6	#N/A	WEATHERSTRIP INTERIOR DOORS WHICH COMPARTMENTALIZE FLOORS, MECHANICAL ROOM AND ACCESS TO UNCONDITIONED AREAS

©2013 Energy Systems Group, LLC

Insulation Line by Line

	EXISTING CONDITIONS						PROPOSED UPGRADE				SAVINGS	
BLD	Sq Ft Needed	Existing R Value	Proposed R Value	Description	Current Heating MMBTU's	Current Cooling MMBTU's	Description	Proposed Heating MMBTU's	Proposed Cooling MMBTU's	Notes	Heat Savings in Therms	Cooling Savings in kWh
Stull Interpretive Center (PRESQUE ISLE)	500	14.00	42.00	MISSING OR AGED BLOWN-IN INSULATION	#N/A	#N/A	RAISE R-VALUES USING BLOWN-IN OR LOOSE FILL INSULATION	#N/A	#N/A	ADD 31 R-VALUE TO EXISTING OLD BATT INSULATION BACK SECTION OF BUILDING	#N/A	#N/A
Stull Interpretive Center (PRESQUE ISLE)	300	7.00	14.00	THERMAX INSULATION	#N/A	#N/A	RAISE R-VALUES USING THERMAX INSULATION	#N/A	#N/A	ADD 7 R-VALUE TO EXISTING OLD BATT INSULATION- INSTALL ON CEILING AROUND MECHANICALS	#N/A	#N/A
Ranger Station (PRESQUE ISLE)	760	1.00	7.00	THERMAX INSULATION	#N/A	#N/A	RAISE R-VALUES USING THERMAX INSULATION	#N/A	#N/A	INSULATE LOBBY AREA CEILING WITH PLAIN WHITE THERMAL PANELS	#N/A	#N/A
Residence-On Campus (PRESQUE ISLE)	1,100	1.00	42.00	MISSING OR AGED BLOWN-IN INSULATION	#N/A	#N/A	RAISE R-VALUES USING BLOWN-IN OR LOOSE FILL INSULATION	#N/A	#N/A	INSULATE ATTICE SPACE	#N/A	#N/A
Residence- 1137 Dutch (PRESQUE ISLE)	910	1.00	38.00	MISSING OR AGED BATT INSULATION	#N/A	#N/A	RAISE R-VALUES USING BATT INSULATION	#N/A	#N/A	BASEMENT CEILING	#N/A	#N/A

©2013 Energy Systems Group, LLC

GES - Proprietary and Confidential

PA STATE PARKS (PYMATUNING)
DETAILED SCOPE OF WORK

Existing Condition	QTY	UOM	Proposed Improvement
ENTRY DOOR MAINTENANCE NEEDED.	83	EACH	PERFORM ENTRY DOOR MAINTENANCE
WORN OUT ENTRY DOOR WEATHERSTRIPPING	60	EACH	REPAIR/REPLACE WEATHERSTRIP ON ENTRY DOORS
WORN OUT ENTRY DOOR SWEEP	60	EACH	INSTALL SWEEPS ON ENTRY DOORS
WORN OUT INTERIOR DOOR WEATHERSTRIP	14	EACH	WEATHERSTRIP INTERIOR DOORS WHICH COMPARTMENTALIZE FLOORS, MECHANICAL ROOM AND ACCESS TO UNCONDITIONED AREAS
WORN OUT INTERIOR DOOR SWEEPS	14	EACH	INSTALL SWEEPS ON INTERIOR DOORS WHICH COMPARTMENTALIZE FLOORS, MECHANICAL ROOM AND ACCESS TO UNCONDITIONED AREAS
WORN OUT DOUBLE DOOR WEATHERSTRIPPING	4	LN FT.	REPAIR/REPLACE WEATHERSTRIP ON DOUBLE DOORS
WORN OUT DOUBLE DOOR SWEEP	4	EACH	INSTALL SWEEPS ON DOUBLE DOORS
WORN OUT GARAGE DOOR WEATHERSTRIP	9	LN FT.	REPLACE GARAGE DOOR WEATHERSTRIPPING
MISSING OR WORN WINDOWS SEALING	679	LN FT.	SEAL EXTERIOR WINDOW PERIMETERS

©2013 Energy Systems Group, LLC

Weatherization Line by Line

	EXISTING CONDITIONS									PROPOSED UPGRADE
BLD	QTY	Length (Ft)	Crack Width (in)	Crack Depth (in)	Total Area	Total Square Inches	CFM	BTU Loss	kWh Loss	Description
Residence-Across From Ranger Station (PYMATUNING)	5	20	1/32	1	0.02	3.12	2.93	98.3	7	PERFORM ENTRY DOOR MAINTENANCE
Residence-Across From Ranger Station (PYMATUNING)	1	3	1/6	1	0.00	0.50	0.47	15.7	1	INSTALL SWEEPS ON ENTRY DOORS
Residence-Across From Ranger Station (PYMATUNING)	1	17	1/8	1	0.01	2.12	2.00	66.9	5	REPAIR/REPLACE WEATHERSTRIP ON ENTRY DOORS
Residence-Across From Ranger Station (PYMATUNING)	1	3	1/6	1	0.00	0.50	0.47	15.7	1	INSTALL SWEEPS ON INTERIOR DOORS WHICH COMPARTMENTALIZE FLOORS, MECHANICAL ROOM AND ACCESS TO UNCONDITIONED AREAS
Residence-Across From Ranger Station (PYMATUNING)	1	17	1/8	1	0.01	2.12	2.00	66.9	5	WEATHERSTRIP INTERIOR DOORS WHICH COMPARTMENTALIZE FLOORS, MECHANICAL ROOM AND ACCESS TO UNCONDITIONED AREAS
Residence-Across From Ranger Station (PYMATUNING)	1	6	1/6	1	0.01	1.00	0.94	31.5	2	INSTALL SWEEPS ON DOUBLE DOORS
Residence-Across From Ranger Station (PYMATUNING)	1	20	1/8	1	0.02	2.50	2.35	78.7	6	REPAIR/REPLACE WEATHERSTRIP ON DOUBLE DOORS
Residence-Across From Ranger Station (PYMATUNING)	225	1	1/48	1	0.03	4.69	4.40	147.5	11	SEAL EXTERIOR WINDOW PERIMETERS
Ranger Station (PYMATUNING)	2	20	1/32	1	0.01	1.25	1.17	39.3	3	PERFORM ENTRY DOOR MAINTENANCE
Ranger Station (PYMATUNING)	2	3	1/6	1	0.01	1.00	0.94	31.5	2	INSTALL SWEEPS ON ENTRY DOORS
Ranger Station (PYMATUNING)	2	17	1/8	1	0.03	4.25	3.99	133.7	10	REPAIR/REPLACE WEATHERSTRIP ON ENTRY DOORS
Laundry House (PYMATUNING)	3	20	1/32	1	0.01	1.87	1.48	49.7	4	PERFORM ENTRY DOOR MAINTENANCE
Laundry House (PYMATUNING)	2	3	1/6	1	0.01	1.00	0.79	26.5	2	INSTALL SWEEPS ON ENTRY DOORS
Laundry House (PYMATUNING)	2	17	1/8	1	0.03	4.25	3.36	112.7	8	REPAIR/REPLACE WEATHERSTRIP ON ENTRY DOORS
Laundry House (PYMATUNING)	1	3	1/6	1	0.00	0.50	0.40	13.3	1	INSTALL SWEEPS ON INTERIOR DOORS WHICH COMPARTMENTALIZE FLOORS, MECHANICAL ROOM AND ACCESS TO UNCONDITIONED AREAS
Laundry House (PYMATUNING)	1	17	1/8	1	0.01	2.12	1.68	56.4	4	WEATHERSTRIP INTERIOR DOORS WHICH COMPARTMENTALIZE FLOORS, MECHANICAL ROOM AND ACCESS TO UNCONDITIONED AREAS
Laundry House (PYMATUNING)	96	1	1/48	1	0.01	2.00	1.58	53.0	4	SEAL EXTERIOR WINDOW PERIMETERS
Cabins 25 (PYMATUNING)	25	20	1/32	1	0.11	15.62	12.37	414.4	30	PERFORM ENTRY DOOR MAINTENANCE

©2013 Energy Systems Group, LLC

Weatherization Line by Line

Cabins 25 (PYMATUNING)	25	3	1/6	1	0.09	12.50	9.89	331.5	24	INSTALL SWEEPS ON ENTRY DOORS
Cabins 25 (PYMATUNING)	25	17	1/8	1	0.37	53.12	42.05	1409.0	104	REPAIR/REPLACE WEATHERSTRIP ON ENTRY DOORS
Marina Restroom (PYMATUNING)	3	20	1/32	1	0.01	1.87	1.48	49.7	4	PERFORM ENTRY DOOR MAINTENANCE
Marina Restroom (PYMATUNING)	3	3	1/6	1	0.01	1.50	1.19	39.8	3	INSTALL SWEEPS ON ENTRY DOORS
Marina Restroom (PYMATUNING)	3	17	1/8	1	0.04	6.37	5.05	169.1	12	REPAIR/REPLACE WEATHERSTRIP ON ENTRY DOORS
Education Center and Concession (PYMATUNING)	14	20	1/32	1	0.06	8.75	6.93	232.1	17	PERFORM ENTRY DOOR MAINTENANCE
Education Center and Concession (PYMATUNING)	2	3	1/6	1	0.01	1.00	0.79	26.5	2	INSTALL SWEEPS ON ENTRY DOORS
Education Center and Concession (PYMATUNING)	2	17	1/8	1	0.03	4.25	3.36	112.7	8	REPAIR/REPLACE WEATHERSTRIP ON ENTRY DOORS
Education Center and Concession (PYMATUNING)	6	3	1/6	1	0.02	3.00	2.37	79.6	6	INSTALL SWEEPS ON INTERIOR DOORS WHICH COMPARTMENTALIZE FLOORS, MECHANICAL ROOM AND ACCESS TO UNCONDITIONED AREAS
Education Center and Concession (PYMATUNING)	6	17	1/8	1	0.09	12.75	10.09	338.2	25	WEATHERSTRIP INTERIOR DOORS WHICH COMPARTMENTALIZE FLOORS, MECHANICAL ROOM AND ACCESS TO UNCONDITIONED AREAS
Education Center and Concession (PYMATUNING)	3	6	1/6	1	0.02	3.00	2.37	79.6	6	INSTALL SWEEPS ON DOUBLE DOORS
Education Center and Concession (PYMATUNING)	3	20	1/8	1	0.05	7.50	5.94	198.9	15	REPAIR/REPLACE WEATHERSTRIP ON DOUBLE DOORS
Bayview Drive Restroom (PYMATUNING)	3	20	1/32	1	0.01	1.87	1.48	49.7	4	PERFORM ENTRY DOOR MAINTENANCE
Bayview Drive Restroom (PYMATUNING)	3	3	1/6	1	0.01	1.50	1.19	39.8	3	INSTALL SWEEPS ON ENTRY DOORS
Bayview Drive Restroom (PYMATUNING)	3	17	1/8	1	0.04	6.37	5.05	169.1	12	REPAIR/REPLACE WEATHERSTRIP ON ENTRY DOORS
Maintenance (PYMATUNING)	5	20	1/32	1	0.02	3.12	2.93	98.3	7	PERFORM ENTRY DOOR MAINTENANCE
Maintenance (PYMATUNING)	5	3	1/6	1	0.02	2.50	2.35	78.7	6	INSTALL SWEEPS ON ENTRY DOORS
Maintenance (PYMATUNING)	5	17	1/8	1	0.07	10.62	9.98	334.3	25	REPAIR/REPLACE WEATHERSTRIP ON ENTRY DOORS
Maintenance (PYMATUNING)	6	42	1/4	1	0.44	63.00	59.15	1982.0	146	REPLACE GARAGE DOOR WEATHERSTRIPPING

©2013 Energy Systems Group, LLC

Weatherization Line by Line

Maintenance (PYMATUNING)	170	1	1/48	1	0.02	3.54	3.33	111.4	8	SEAL EXTERIOR WINDOW PERIMETERS
Residence- Dan's (PYMATUNING)	6	20	1/32	1	0.03	3.75	4.15	139.2	10	PERFORM ENTRY DOOR MAINTENANCE
Residence- Dan's (PYMATUNING)	3	3	1/6	1	0.01	1.50	1.66	55.7	4	INSTALL SWEEPS ON ENTRY DOORS
Residence- Dan's (PYMATUNING)	3	17	1/8	1	0.04	6.37	7.06	236.7	17	REPAIR/REPLACE WEATHERSTRIP ON ENTRY DOORS
Residence- Dan's (PYMATUNING)	3	3	1/6	1	0.01	1.50	1.66	55.7	4	INSTALL SWEEPS ON INTERIOR DOORS WHICH COMPARTMENTALIZE FLOORS, MECHANICAL ROOM AND ACCESS TO UNCONDITIONED AREAS
Residence- Dan's (PYMATUNING)	3	17	1/8	1	0.04	6.37	7.06	236.7	17	WEATHERSTRIP INTERIOR DOORS WHICH COMPARTMENTALIZE FLOORS, MECHANICAL ROOM AND ACCESS TO UNCONDITIONED AREAS
Spillway Restroom and Concession (PYMATUNING)	6	20	1/32	1	0.03	3.75	2.95	98.8	7	PERFORM ENTRY DOOR MAINTENANCE
Spillway Restroom and Concession (PYMATUNING)	6	3	1/6	1	0.02	3.00	2.36	79.0	6	INSTALL SWEEPS ON ENTRY DOORS
Spillway Restroom and Concession (PYMATUNING)	6	17	1/8	1	0.09	12.75	10.02	335.8	25	REPAIR/REPLACE WEATHERSTRIP ON ENTRY DOORS
Spillway Restroom and Concession (PYMATUNING)	3	12	1/4	1	0.06	9.00	7.07	237.0	17	REPLACE GARAGE DOOR WEATHERSTRIPPING
Residence- Scott's (PYMATUNING)	5	20	1/32	1	0.02	3.12	3.46	116.0	9	PERFORM ENTRY DOOR MAINTENANCE
Residence- Scott's (PYMATUNING)	3	3	1/6	1	0.01	1.50	1.66	55.7	4	INSTALL SWEEPS ON ENTRY DOORS
Residence- Scott's (PYMATUNING)	3	17	1/8	1	0.04	6.37	7.06	236.7	17	REPAIR/REPLACE WEATHERSTRIP ON ENTRY DOORS
Residence- Scott's (PYMATUNING)	2	3	1/6	1	0.01	1.00	1.11	37.1	3	INSTALL SWEEPS ON INTERIOR DOORS WHICH COMPARTMENTALIZE FLOORS, MECHANICAL ROOM AND ACCESS TO UNCONDITIONED AREAS
Residence- Scott's (PYMATUNING)	2	17	1/8	1	0.03	4.25	4.71	157.8	12	WEATHERSTRIP INTERIOR DOORS WHICH COMPARTMENTALIZE FLOORS, MECHANICAL ROOM AND ACCESS TO UNCONDITIONED AREAS
Park Office (PYMATUNING)	6	20	1/32	1	0.03	3.75	3.52	118.0	9	PERFORM ENTRY DOOR MAINTENANCE
Park Office (PYMATUNING)	5	3	1/6	1	0.02	2.50	2.35	78.7	6	INSTALL SWEEPS ON ENTRY DOORS
Park Office (PYMATUNING)	5	17	1/8	1	0.07	10.62	9.98	334.3	25	REPAIR/REPLACE WEATHERSTRIP ON ENTRY DOORS
Park Office (PYMATUNING)	1	3	1/6	1	0.00	0.50	0.47	15.7	1	INSTALL SWEEPS ON INTERIOR DOORS WHICH COMPARTMENTALIZE FLOORS, MECHANICAL ROOM AND ACCESS TO UNCONDITIONED AREAS

©2013 Energy Systems Group, LLC

Weatherization Line by Line

										WEATHERSTRIP INTERIOR DOORS WHICH COMPARTMENTALIZE FLOORS, MECHANICAL ROOM AND ACCESS TO UNCONDITIONED AREAS	SEAL EXTERIOR WINDOW PERIMETERS
										5	9
Park Office (PYMATUNING)	1	17	1/8	1	0.01	2.12	2.00	66.9			
Park Office (PYMATUNING)	188	1	1/48	1	0.03	3.92	3.68	123.2			

©2013 Energy Systems Group, LLC

PA STATE PARKS (RACCOON)
DETAILED SCOPE OF WORK

Existing Condition	QTY	UOM	Proposed Improvement
ENTRY DOOR MAINTENANCE NEEDED.	59	EACH	PERFORM ENTRY DOOR MAINTENANCE
WORN OUT ENTRY DOOR WEATHERSTRIPPING	40	EACH	REPAIR/REPLACE WEATHERSTRIP ON ENTRY DOORS
WORN OUT ENTRY DOOR SWEEP	40	EACH	INSTALL SWEEPS ON ENTRY DOORS
WORN OUT INTERIOR DOOR WEATHERSTRIP	3	EACH	WEATHERSTRIP INTERIOR DOORS WHICH COMPARTMENTALIZE FLOORS, MECHANICAL ROOM AND ACCESS TO UNCONDITIONED AREAS
WORN OUT INTERIOR DOOR SWEEPS	3	EACH	INSTALL SWEEPS ON INTERIOR DOORS WHICH COMPARTMENTALIZE FLOORS, MECHANICAL ROOM AND ACCESS TO UNCONDITIONED AREAS
WORN OUT DOUBLE DOOR WEATHERSTRIPPING	7	LN FT.	REPAIR/REPLACE WEATHERSTRIP ON DOUBLE DOORS
WORN OUT DOUBLE DOOR SWEEP	7	EACH	INSTALL SWEEPS ON DOUBLE DOORS
WORN OUT GARAGE DOOR WEATHERSTRIP	5	LN FT.	REPLACE GARAGE DOOR WEATHERSTRIPPING
MISSING OR WORN WINDOWS SEALING	30	LN FT.	SEAL EXTERIOR WINDOW PERIMETERS
WALL JOINTS SEAL	140	LN FT.	SEAL EXTERIOR WALL JOINTS
MISSING OR AGED BLOWN-IN INSULATION	3800	EACH	RAISE R-VALUES USING BLOWN-IN OR LOOSE FILL INSULATION

©2013 Energy Systems Group, LLC

Weatherization Line by Line

	EXISTING CONDITIONS									PROPOSED UPGRADE
BLD	QTY	Length (Ft)	Crack Width (in)	Crack Depth (in)	Total Area	Total Square Inches	CFM	BTU Loss	kWh Loss	Description
Park Office (RACCOON)	8	20	1/32	1	0.03	5.00	5.19	220.8	16	PERFORM ENTRY DOOR MAINTENANCE
Park Office (RACCOON)	4	3	1/4	1	0.02	3.00	3.11	132.5	10	INSTALL SWEEPS ON ENTRY DOORS
Park Office (RACCOON)	4	17	3/16	1	0.09	12.75	13.23	563.0	42	REPAIR/REPLACE WEATHERSTRIP ON ENTRY DOORS
Park Office (RACCOON)	2	3	1/6	1	0.01	1.00	1.04	44.2	3	INSTALL SWEEPS ON INTERIOR DOORS WHICH COMPARTMENTALIZE FLOORS, MECHANICAL ROOM AND ACCESS TO UNCONDITIONED AREAS
Park Office (RACCOON)	2	17	1/8	1	0.03	4.25	4.41	187.7	14	WEATHERSTRIP INTERIOR DOORS WHICH COMPARTMENTALIZE FLOORS, MECHANICAL ROOM AND ACCESS TO UNCONDITIONED AREAS
Park Office (RACCOON)	1	6	1/4	1	0.01	1.50	1.56	66.2	5	INSTALL SWEEPS ON DOUBLE DOORS
Park Office (RACCOON)	1	20	3/16	1	0.03	3.75	3.89	165.6	12	REPAIR/REPLACE WEATHERSTRIP ON DOUBLE DOORS
Cabins 1-6 & 10 (7) (RACCOON)	7	20	1/32	1	0.03	4.37	3.97	168.7	12	PERFORM ENTRY DOOR MAINTENANCE
Cabins 1-6 & 10 (7) (RACCOON)	7	3	1/6	1	0.02	3.50	3.17	135.0	10	INSTALL SWEEPS ON ENTRY DOORS
Cabins 1-6 & 10 (7) (RACCOON)	7	17	1/8	1	0.10	14.87	13.48	573.7	42	REPAIR/REPLACE WEATHERSTRIP ON ENTRY DOORS
Linsly Residence (RACCOON)	3	20	1/32	1	0.01	1.87	1.95	82.8	6	PERFORM ENTRY DOOR MAINTENANCE
Linsly Residence (RACCOON)	2	3	1/6	1	0.01	1.00	1.04	44.2	3	INSTALL SWEEPS ON ENTRY DOORS
Linsly Residence (RACCOON)	2	17	1/8	1	0.03	4.25	4.41	187.7	14	REPAIR/REPLACE WEATHERSTRIP ON ENTRY DOORS
Linsly Residence (RACCOON)	1	3	1/6	1	0.00	0.50	0.52	22.1	2	INSTALL SWEEPS ON INTERIOR DOORS WHICH COMPARTMENTALIZE FLOORS, MECHANICAL ROOM AND ACCESS TO UNCONDITIONED AREAS
Linsly Residence (RACCOON)	1	17	1/8	1	0.01	2.12	2.20	93.8	7	WEATHERSTRIP INTERIOR DOORS WHICH COMPARTMENTALIZE FLOORS, MECHANICAL ROOM AND ACCESS TO UNCONDITIONED AREAS
Linsly Residence (RACCOON)	1	30	1/4	1	0.05	7.50	7.78	331.2	24	REPLACE GARAGE DOOR WEATHERSTRIPPING
Rec Center (RACCOON)	8	20	1/32	1	0.03	5.00	5.19	220.8	16	PERFORM ENTRY DOOR MAINTENANCE
Rec Center (RACCOON)	4	3	1/6	1	0.01	2.00	2.07	88.3	7	INSTALL SWEEPS ON ENTRY DOORS

©2013 Energy Systems Group, LLC

Weatherization Line by Line

Rec Center (RACCOON)	4	17	1/8	1	0.06	8.50	8.82	375.3	28	REPAIR/REPLACE WEATHERSTRIP ON ENTRY DOORS
Rec Center (RACCOON)	1	6	1/6	1	0.01	1.00	1.04	44.2	3	INSTALL SWEEPS ON DOUBLE DOORS
Rec Center (RACCOON)	1	20	1/8	1	0.02	2.50	2.59	110.4	8	REPAIR/REPLACE WEATHERSTRIP ON DOUBLE DOORS
Contact Station (RACCOON)	2	20	1/32	1	0.01	1.25	1.13	48.2	4	PERFORM ENTRY DOOR MAINTENANCE
Contact Station (RACCOON)	2	3	1/6	1	0.01	1.00	0.91	38.6	3	INSTALL SWEEPS ON ENTRY DOORS
Contact Station (RACCOON)	2	17	1/8	1	0.03	4.25	3.85	163.9	12	REPAIR/REPLACE WEATHERSTRIP ON ENTRY DOORS
Boat Rental (RACCOON)	1	20	1/32	1	0.00	0.62	0.57	24.1	2	PERFORM ENTRY DOOR MAINTENANCE
Boat Rental (RACCOON)	1	3	1/6	1	0.00	0.50	0.45	19.3	1	INSTALL SWEEPS ON ENTRY DOORS
Boat Rental (RACCOON)	1	17	1/8	1	0.01	2.12	1.93	82.0	6	REPAIR/REPLACE WEATHERSTRIP ON ENTRY DOORS
Boat Rental (RACCOON)	2	12	1/4	1	0.04	6.00	5.44	231.4	17	REPLACE GARAGE DOOR WEATHERSTRIPPING
Beach Concession (RACCOON)	3	20	1/32	1	0.01	1.87	1.70	72.3	5	PERFORM ENTRY DOOR MAINTENANCE
Beach Concession (RACCOON)	1	3	1/6	1	0.00	0.50	0.45	19.3	1	INSTALL SWEEPS ON ENTRY DOORS
Beach Concession (RACCOON)	1	17	1/8	1	0.01	2.12	1.93	82.0	6	REPAIR/REPLACE WEATHERSTRIP ON ENTRY DOORS
Beach Concession (RACCOON)	1	6	1/6	1	0.01	1.00	0.91	38.6	3	INSTALL SWEEPS ON DOUBLE DOORS
Beach Concession (RACCOON)	1	20	1/8	1	0.02	2.50	2.27	96.4	7	REPAIR/REPLACE WEATHERSTRIP ON DOUBLE DOORS
Water Treatment (RACCOON)	4	20	1/32	1	0.02	2.50	2.59	110.4	8	PERFORM ENTRY DOOR MAINTENANCE
Water Treatment (RACCOON)	4	3	1/6	1	0.01	2.00	2.07	88.3	7	INSTALL SWEEPS ON ENTRY DOORS
Water Treatment (RACCOON)	4	17	1/8	1	0.06	8.50	8.82	375.3	28	REPAIR/REPLACE WEATHERSTRIP ON ENTRY DOORS
Sewage (RACCOON)	4	20	1/32	1	0.02	2.50	2.59	110.4	8	PERFORM ENTRY DOOR MAINTENANCE

©2013 Energy Systems Group, LLC

Weatherization Line by Line

Sewage (RACCOON)	2	6	1/6	1	0.01	2.00	2.07	88.3	7	INSTALL SWEEPS ON DOUBLE DOORS
Sewage (RACCOON)	2	20	1/8	1	0.03	5.00	5.19	220.8	16	REPAIR/REPLACE WEATHERSTRIP ON DOUBLE DOORS
Lake Side Lodge (RACCOON)	4	20	1/32	1	0.02	2.50	2.59	110.4	8	PERFORM ENTRY DOOR MAINTENANCE
Lake Side Lodge (RACCOON)	4	3	1/6	1	0.01	2.00	2.07	88.3	7	INSTALL SWEEPS ON ENTRY DOORS
Lake Side Lodge (RACCOON)	4	17	1/8	1	0.06	8.50	8.82	375.3	28	REPAIR/REPLACE WEATHERSTRIP ON ENTRY DOORS
Nature Center (RACCOON)	3	20	1/32	1	0.01	1.87	1.95	82.8	6	PERFORM ENTRY DOOR MAINTENANCE
Nature Center (RACCOON)	1	3	1/6	1	0.00	0.50	0.52	22.1	2	INSTALL SWEEPS ON ENTRY DOORS
Nature Center (RACCOON)	1	17	1/8	1	0.01	2.12	2.20	93.8	7	REPAIR/REPLACE WEATHERSTRIP ON ENTRY DOORS
Nature Center (RACCOON)	1	6	1/6	1	0.01	1.00	1.04	44.2	3	INSTALL SWEEPS ON DOUBLE DOORS
Nature Center (RACCOON)	1	20	1/8	1	0.02	2.50	2.59	110.4	8	REPAIR/REPLACE WEATHERSTRIP ON DOUBLE DOORS
Nature Center (RACCOON)	140	1	1/32	1	0.03	4.37	4.54	193.2	14	SEAL EXTERIOR WALL JOINTS
Residence- by Nature Center (RACCOON)	5	20	1/32	1	0.02	3.12	3.24	138.0	10	PERFORM ENTRY DOOR MAINTENANCE
Residence- by Nature Center (RACCOON)	3	3	1/6	1	0.01	1.50	1.56	66.2	5	INSTALL SWEEPS ON ENTRY DOORS
Residence- by Nature Center (RACCOON)	3	17	1/8	1	0.04	6.37	6.61	281.5	21	REPAIR/REPLACE WEATHERSTRIP ON ENTRY DOORS
Residence- by Nature Center (RACCOON)	1	6	1/6	1	0.01	1.00	1.04	44.2	3	INSTALL SWEEPS ON DOUBLE DOORS
Residence- by Nature Center (RACCOON)	1	20	1/8	1	0.02	2.50	2.59	110.4	8	REPAIR/REPLACE WEATHERSTRIP ON DOUBLE DOORS
Residence- Sarah's (RACCOON)	5	20	1/32	1	0.02	3.12	3.67	156.1	12	PERFORM ENTRY DOOR MAINTENANCE
Residence- Sarah's (RACCOON)	5	3	1/6	1	0.02	2.50	2.93	124.8	9	INSTALL SWEEPS ON ENTRY DOORS
Residence- Sarah's (RACCOON)	5	17	1/8	1	0.07	10.62	12.47	530.6	39	REPAIR/REPLACE WEATHERSTRIP ON ENTRY DOORS

©2013 Energy Systems Group, LLC

Weatherization Line by Line

Residence- Sarah's (RACCOON)	30	1	1/32	1	0.01	0.94	1.10	46.8	3		SEAL EXTERIOR WINDOW PERIMETERS
Residence Loft- Sarah's (RACCOON)	2	20	1/32	1	0.01	1.25	1.47	62.4	5		PERFORM ENTRY DOOR MAINTENANCE
Residence Loft- Sarah's (RACCOON)	2	3	1/6	1	0.01	1.00	1.17	49.9	4		INSTALL SWEEPS ON ENTRY DOORS
Residence Loft- Sarah's (RACCOON)	2	17	1/8	1	0.03	4.25	4.99	212.2	16		REPAIR/REPLACE WEATHERSTRIP ON ENTRY DOORS
Residence Loft- Sarah's (RACCOON)	2	32	1/4	1	0.11	16.00	18.77	799.0	59		REPLACE GARAGE DOOR WEATHERSTRIPPING

©2013 Energy Systems Group, LLC

Insulation Line by Line

	EXISTING CONDITIONS						PROPOSED UPGRADE				SAVINGS	
BLD	Sq Ft Needed	Existing R Value	Proposed R Value	Description	Current Heating MMBTU's	Current Cooling MMBTU's	Description	Proposed Heating MMBTU's	Proposed Cooling MMBTU's	Notes	Heat Savings in Therms	Cooling Savings in kWh
Cabins 1-6 & 10 (7) (RACCOON)	2,800	12.00	42.00	MISSING OR AGED BLOWN-IN INSULATION	11.58	4.14	RAISE R-VALUES USING BLOWN-IN OR LOOSE FILL INSULATION	3.31	1.18	7 CABINS (400 EACH)	90.00	307.82
Lake Side Lodge (RACCOON)	800	12.00	42.00	MISSING OR AGED BLOWN-IN INSULATION	3.31	1.18	RAISE R-VALUES USING BLOWN-IN OR LOOSE FILL INSULATION	0.95	0.34		29.54	87.95
Nature Center (RACCOON)	200	1.00	42.00	MISSING OR AGED BLOWN-IN INSULATION	9.92	3.55	RAISE R-VALUES USING BLOWN-IN OR LOOSE FILL INSULATION	0.24	0.08		121.09	360.59

©2013 Energy Systems Group, LLC

PA STATE PARKS (REGION 2 COMPLEX)
DETAILED SCOPE OF WORK

Existing Condition	QTY	UOM	Proposed Improvement
ENTRY DOOR MAINTENANCE NEEDED.	16	EACH	PERFORM ENTRY DOOR MAINTENANCE
WORN OUT ENTRY DOOR WEATHERSTRIPPING	13	EACH	REPAIR/REPLACE WEATHERSTRIP ON ENTRY DOORS
WORN OUT ENTRY DOOR SWEEP	13	EACH	INSTALL SWEEPS ON ENTRY DOORS
WORN OUT INTERIOR DOOR WEATHERSTRIP	1	EACH	WEATHERSTRIP INTERIOR DOORS WHICH COMPARTMENTALIZE FLOORS, MECHANICAL ROOM AND ACCESS TO UNCONDITIONED AREAS
WORN OUT INTERIOR DOOR SWEEPS	1	EACH	INSTALL SWEEPS ON INTERIOR DOORS WHICH COMPARTMENTALIZE FLOORS, MECHANICAL ROOM AND ACCESS TO UNCONDITIONED AREAS
WORN OUT DOUBLE DOOR WEATHERSTRIPPING	1	EACH	REPAIR/REPLACE WEATHERSTRIP ON DOUBLE DOORS
WORN OUT DOUBLE DOOR SWEEP	1	EACH	INSTALL SWEEPS ON DOUBLE DOORS
WORN OUT GARAGE DOOR WEATHERSTRIP	5	EACH	REPLACE GARAGE DOOR WEATHERSTRIPPING
MISSING OR WORN AIR CONDITIONER SEALING	1	EACH	SEAL GAPS AROUND WINDOW AIR CONDITIONER

©2013 Energy Systems Group, LLC

Weatherization Line by Line

	EXISTING CONDITIONS									PROPOSED UPGRADE
BLD	QTY	Length (Ft)	Crack Width (in)	Crack Depth (in)	Total Area	Total Square Inches	CFM	BTU Loss	kWh Loss	Description
Maintenance (REGION 2)	3	32	1/2	1	0.33	48.00	56.32	2397.1	177	REPLACE GARAGE DOOR WEATHERSTRIPPING
Maintenance (REGION 2)	6	20	1/16	1	0.05	7.50	8.80	374.5	28	PERFORM ENTRY DOOR MAINTENANCE
Maintenance (REGION 2)	6	3	1/4	1	0.03	4.50	5.28	224.7	17	INSTALL SWEEPS ON ENTRY DOORS
Maintenance (REGION 2)	6	17	3/16	1	0.13	19.12	22.44	955.1	71	REPAIR/REPLACE WEATHERSTRIP ON ENTRY DOORS
Maintenance (REGION 2)	1	6	1/4	1	0.01	1.50	1.76	74.9	6	SEAL GAPS AROUND WINDOW AIR CONDITIONER
Carpenter Shop (REGION 2)	1	32	1/2	1	0.11	16.00	16.60	706.5	52	REPLACE GARAGE DOOR WEATHERSTRIPPING
Carpenter Shop (REGION 2)	2	20	1/16	1	0.02	2.50	2.59	110.4	8	PERFORM ENTRY DOOR MAINTENANCE
Carpenter Shop (REGION 2)	2	3	1/4	1	0.01	1.50	1.56	66.2	5	INSTALL SWEEPS ON ENTRY DOORS
Carpenter Shop (REGION 2)	2	17	3/16	1	0.04	6.37	6.61	281.5	21	REPAIR/REPLACE WEATHERSTRIP ON ENTRY DOORS
Office (REGION 2)	1	32	1/2	1	0.11	16.00	18.77	799.0	59	REPLACE GARAGE DOOR WEATHERSTRIPPING
Office (REGION 2)	8	20	1/16	1	0.07	10.00	11.73	499.4	37	PERFORM ENTRY DOOR MAINTENANCE
Office (REGION 2)	5	3	1/4	1	0.03	3.75	4.40	187.3	14	INSTALL SWEEPS ON ENTRY DOORS
Office (REGION 2)	5	17	3/16	1	0.11	15.94	18.70	795.9	59	REPAIR/REPLACE WEATHERSTRIP ON ENTRY DOORS
Office (REGION 2)	1	3	1/4	1	0.01	0.75	0.88	37.5	3	INSTALL SWEEPS ON INTERIOR DOORS WHICH COMPARTMENTALIZE FLOORS, MECHANICAL ROOM AND ACCESS TO UNCONDITIONED AREAS
Office (REGION 2)	1	17	3/16	1	0.02	3.19	3.74	159.2	12	WEATHERSTRIP INTERIOR DOORS WHICH COMPARTMENTALIZE FLOORS, MECHANICAL ROOM AND ACCESS TO UNCONDITIONED AREAS
Office (REGION 2)	1	6	1/4	1	0.01	1.50	1.76	74.9	6	INSTALL SWEEPS ON DOUBLE DOORS
Office (REGION 2)	1	20	3/16	1	0.03	3.75	4.40	187.3	14	REPAIR/REPLACE WEATHERSTRIP ON DOUBLE DOORS

©2013 Energy Systems Group, LLC

GES - Proprietary and Confidential

PA STATE PARKS (RYERSON STATION)
DETAILED SCOPE OF WORK

Existing Condition	QTY	UOM	Proposed Improvement
ENTRY DOOR MAINTENANCE NEEDED.	19	EACH	PERFORM ENTRY DOOR MAINTENANCE
WORN OUT ENTRY DOOR WEATHERSTRIPPING	17	EACH	REPAIR/REPLACE WEATHERSTRIP ON ENTRY DOORS
WORN OUT ENTRY DOOR SWEEP	17	EACH	INSTALL SWEEPS ON ENTRY DOORS
WORN OUT INTERIOR DOOR WEATHERSTRIP	2	EACH	WEATHERSTRIP INTERIOR DOORS WHICH COMPARTMENTALIZE FLOORS, MECHANICAL ROOM AND ACCESS TO UNCONDITIONED AREAS
WORN OUT INTERIOR DOOR SWEEPS	2	EACH	INSTALL SWEEPS ON INTERIOR DOORS WHICH COMPARTMENTALIZE FLOORS, MECHANICAL ROOM AND ACCESS TO UNCONDITIONED AREAS
WORN OUT GARAGE DOOR WEATHERSTRIP	6	LN FT.	REPLACE GARAGE DOOR WEATHERSTRIPPING
UNSEALED ATTIC/ROOF HATCH	1	LN FT.	REPAIR/REPLACE WEATHERSTRIP ON ATTIC/ROOF HATCH
EXISTING ROOF WALL GAPS - INTERIOR	40	SQ FT.	SEAL INTERIOR ROOF/WALL INTERSECTION

©2013 Energy Systems Group, LLC

Weatherization Line by Line

	EXISTING CONDITIONS									PROPOSED UPGRADE
BLD	QTY	Length (Ft)	Crack Width (in)	Crack Depth (in)	Total Area	Total Square Inches	CFM	BTU Loss	kWh Loss	Description
Park Office (RYERSON)	6	20	1/32	1	0.03	3.75	3.40	144.6	15	PERFORM ENTRY DOOR MAINTENANCE
Park Office (RYERSON)	5	3	1/6	1	0.02	2.50	2.27	96.4	10	INSTALL SWEEPS ON ENTRY DOORS
Park Office (RYERSON)	5	17	1/8	1	0.07	10.62	9.63	409.8	43	REPAIR/REPLACE WEATHERSTRIP ON ENTRY DOORS
Park Office (RYERSON)	1	3	1/6	1	0.00	0.50	0.45	19.3	2	INSTALL SWEEPS ON INTERIOR DOORS WHICH COMPARTMENTALIZE FLOORS, MECHANICAL ROOM AND ACCESS TO UNCONDITIONED AREAS
Park Office (RYERSON)	1	17	1/8	1	0.01	2.12	1.93	82.0	9	WEATHERSTRIP INTERIOR DOORS WHICH COMPARTMENTALIZE FLOORS, MECHANICAL ROOM AND ACCESS TO UNCONDITIONED AREAS
Maintenance Back Building (RYERSON)	2	20	1/32	1	0.01	1.25	1.30	55.2	6	PERFORM ENTRY DOOR MAINTENANCE
Maintenance Back Building (RYERSON)	2	3	1/6	1	0.01	1.00	1.04	44.2	5	INSTALL SWEEPS ON ENTRY DOORS
Maintenance Back Building (RYERSON)	2	17	1/8	1	0.03	4.25	4.41	187.7	20	REPAIR/REPLACE WEATHERSTRIP ON ENTRY DOORS
Maintenance Back Building (RYERSON)	3	42	1/4	1	0.22	31.50	32.68	1390.8	146	REPLACE GARAGE DOOR WEATHERSTRIPPING
New Maintenance (RYERSON)	5	20	1/32	1	0.02	3.12	2.91	124.0	13	PERFORM ENTRY DOOR MAINTENANCE
New Maintenance (RYERSON)	4	3	1/6	1	0.01	2.00	1.86	79.3	8	INSTALL SWEEPS ON ENTRY DOORS
New Maintenance (RYERSON)	4	17	1/8	1	0.06	8.50	7.92	337.1	35	REPAIR/REPLACE WEATHERSTRIP ON ENTRY DOORS
New Maintenance (RYERSON)	1	3	1/6	1	0.00	0.50	0.47	19.8	2	INSTALL SWEEPS ON INTERIOR DOORS WHICH COMPARTMENTALIZE FLOORS, MECHANICAL ROOM AND ACCESS TO UNCONDITIONED AREAS
New Maintenance (RYERSON)	1	17	1/8	1	0.01	2.12	1.98	84.3	9	WEATHERSTRIP INTERIOR DOORS WHICH COMPARTMENTALIZE FLOORS, MECHANICAL ROOM AND ACCESS TO UNCONDITIONED AREAS
New Maintenance (RYERSON)	3	42	1/4	1	0.22	31.50	29.36	1249.4	131	REPLACE GARAGE DOOR WEATHERSTRIPPING
New Maintenance (RYERSON)	1	6	3/16	1	0.01	1.12	1.05	44.6	5	REPAIR/REPLACE WEATHERSTRIP ON ATTIC/ROOF HATCH
Sewage (RYERSON)	1	20	1/32	1	0.00	0.62	0.58	24.8	3	PERFORM ENTRY DOOR MAINTENANCE
Sewage (RYERSON)	1	3	1/6	1	0.00	0.50	0.47	19.8	2	INSTALL SWEEPS ON ENTRY DOORS

©2013 Energy Systems Group, LLC

Weatherization Line by Line

Sewage (RYERSON)	1	17	1/8	1	0.01	2.12	1.98	84.3	9	REPAIR/REPLACE WEATHERSTRIP ON ENTRY DOORS
Sewage (RYERSON)	40	1	3/4	1	0.21	30.00	27.96	1189.9	125	SEAL INTERIOR ROOF/WALL INTERSECTION
Residence (RYERSON)	3	20	1/32	1	0.01	1.87	1.95	82.8	9	PERFORM ENTRY DOOR MAINTENANCE
Residence (RYERSON)	3	3	1/6	1	0.01	1.50	1.56	66.2	7	INSTALL SWEEPS ON ENTRY DOORS
Residence (RYERSON)	3	17	1/8	1	0.04	6.37	6.61	281.5	30	REPAIR/REPLACE WEATHERSTRIP ON ENTRY DOORS
Cabins 2 (RYERSON)	2	20	1/32	1	0.01	1.25	1.47	62.4	7	PERFORM ENTRY DOOR MAINTENANCE
Cabins 2 (RYERSON)	2	3	1/6	1	0.01	1.00	1.17	49.9	5	INSTALL SWEEPS ON ENTRY DOORS
Cabins 2 (RYERSON)	2	17	1/8	1	0.03	4.25	4.99	212.2	22	REPAIR/REPLACE WEATHERSTRIP ON ENTRY DOORS

©2013 Energy Systems Group, LLC

PA STATE PARKS (YELLOW CREEK)
DETAILED SCOPE OF WORK

Existing Condition	QTY	UOM	Proposed Improvement
ENTRY DOOR MAINTENANCE NEEDED.	29	EACH	PERFORM ENTRY DOOR MAINTENANCE
WORN OUT ENTRY DOOR WEATHERSTRIPPING	25	EACH	REPAIR/REPLACE WEATHERSTRIP ON ENTRY DOORS
WORN OUT ENTRY DOOR SWEEP	25	EACH	INSTALL SWEEPS ON ENTRY DOORS
WORN OUT INTERIOR DOOR WEATHERSTRIP	2	EACH	WEATHERSTRIP INTERIOR DOORS WHICH COMPARTMENTALIZE FLOORS, MECHANICAL ROOM AND ACCESS TO UNCONDITIONED AREAS
WORN OUT INTERIOR DOOR SWEEPS	2	EACH	INSTALL SWEEPS ON INTERIOR DOORS WHICH COMPARTMENTALIZE FLOORS, MECHANICAL ROOM AND ACCESS TO UNCONDITIONED AREAS
WORN OUT DOUBLE DOOR WEATHERSTRIPPING	1	LN FT.	REPAIR/REPLACE WEATHERSTRIP ON DOUBLE DOORS
WORN OUT DOUBLE DOOR SWEEP	1	EACH	INSTALL SWEEPS ON DOUBLE DOORS
WORN OUT GARAGE DOOR WEATHERSTRIP	4	LN FT.	REPLACE GARAGE DOOR WEATHERSTRIPPING
MISSING OR WORN AIR CONDITIONER SEALING	3	SQ FT.	SEAL GAPS AROUND WINDOW AIR CONDITIONER
THERMAX INSULATION	4	EACH	RAISE R-VALUES USING THERMAX INSULATION

©2013 Energy Systems Group, LLC

Weatherization Line by Line

	EXISTING CONDITIONS									PROPOSED UPGRADE
BLD	QTY	Length (Ft)	Crack Width (in)	Crack Depth (in)	Total Area	Total Square Inches	CFM	BTU Loss	kWh Loss	Description
Park Office (YELLOW CREEK)	3	20	1/32	1	0.01	1.87	1.36	41.6	4	PERFORM ENTRY DOOR MAINTENANCE
Park Office (YELLOW CREEK)	3	3	1/6	1	0.01	1.50	1.09	33.3	3	INSTALL SWEEPS ON ENTRY DOORS
Park Office (YELLOW CREEK)	3	17	1/8	1	0.04	6.37	4.64	141.5	12	REPAIR/REPLACE WEATHERSTRIP ON ENTRY DOORS
Park Office (YELLOW CREEK)	3	6	1/4	1	0.03	4.50	3.27	99.9	9	SEAL GAPS AROUND WINDOW AIR CONDITIONER
Residence- by Maintenance (YELLOW CREEK)	5	20	1/32	1	0.02	3.12	2.65	80.9	7	PERFORM ENTRY DOOR MAINTENANCE
Residence- by Maintenance (YELLOW CREEK)	3	3	1/6	1	0.01	1.50	1.27	38.9	3	INSTALL SWEEPS ON ENTRY DOORS
Residence- by Maintenance (YELLOW CREEK)	3	17	1/8	1	0.04	6.37	5.41	165.1	14	REPAIR/REPLACE WEATHERSTRIP ON ENTRY DOORS
Residence- by Maintenance (YELLOW CREEK)	1	6	1/6	1	0.01	1.00	0.85	25.9	2	INSTALL SWEEPS ON DOUBLE DOORS
Residence- by Maintenance (YELLOW CREEK)	1	20	1/8	1	0.02	2.50	2.12	64.8	6	REPAIR/REPLACE WEATHERSTRIP ON DOUBLE DOORS
Education Learning Center (YELLOW CREEK)	5	20	1/32	1	0.02	3.12	3.18	97.1	8	PERFORM ENTRY DOOR MAINTENANCE
Education Learning Center (YELLOW CREEK)	5	3	1/6	1	0.02	2.50	2.55	77.7	7	INSTALL SWEEPS ON ENTRY DOORS
Education Learning Center (YELLOW CREEK)	5	17	1/8	1	0.07	10.62	10.82	330.2	29	REPAIR/REPLACE WEATHERSTRIP ON ENTRY DOORS
Education Learning Center (YELLOW CREEK)	1	28	1/4	1	0.05	7.00	7.13	217.5	19	REPLACE GARAGE DOOR WEATHERSTRIPPING
Maintenance (YELLOW CREEK)	7	20	1/32	1	0.03	4.37	3.18	97.1	8	PERFORM ENTRY DOOR MAINTENANCE
Maintenance (YELLOW CREEK)	5	3	1/6	1	0.02	2.50	1.82	55.5	5	INSTALL SWEEPS ON ENTRY DOORS
Maintenance (YELLOW CREEK)	5	17	1/8	1	0.07	10.62	7.73	235.8	21	REPAIR/REPLACE WEATHERSTRIP ON ENTRY DOORS
Maintenance (YELLOW CREEK)	2	3	1/6	1	0.01	1.00	0.73	22.2	2	INSTALL SWEEPS ON INTERIOR DOORS WHICH COMPARTMENTALIZE FLOORS, MECHANICAL ROOM AND ACCESS TO UNCONDITIONED AREAS
Maintenance (YELLOW CREEK)	2	17	1/8	1	0.03	4.25	3.09	94.3	8	WEATHERSTRIP INTERIOR DOORS WHICH COMPARTMENTALIZE FLOORS, MECHANICAL ROOM AND ACCESS TO UNCONDITIONED AREAS

©2013 Energy Systems Group, LLC

Weatherization Line by Line

Maintenance (YELLOW CREEK)	3	42	1/4	1	0.22	31.50	22.92	699.1	61		REPLACE GARAGE DOOR WEATHERSTRIPPING
Bath House (YELLOW CREEK)	3	20	1/32	1	0.01	1.87	1.91	58.3	5		PERFORM ENTRY DOOR MAINTENANCE
Bath House (YELLOW CREEK)	3	3	1/6	1	0.01	1.50	1.53	46.6	4		INSTALL SWEEPS ON ENTRY DOORS
Bath House (YELLOW CREEK)	3	17	1/8	1	0.04	6.37	6.49	198.1	17		REPAIR/REPLACE WEATHERSTRIP ON ENTRY DOORS
Cottages 6 (YELLOW CREEK)	6	20	1/32	1	0.03	3.75	2.56	78.1	7		PERFORM ENTRY DOOR MAINTENANCE
Cottages 6 (YELLOW CREEK)	6	3	1/6	1	0.02	3.00	2.05	62.5	5		INSTALL SWEEPS ON ENTRY DOORS
Cottages 6 (YELLOW CREEK)	6	17	1/8	1	0.09	12.75	8.70	265.5	23		REPAIR/REPLACE WEATHERSTRIP ON ENTRY DOORS

©2013 Energy Systems Group, LLC

Insulation Line by Line

EXISTING CONDITIONS								PROPOSED UPGRADE				SAVINGS	
BLD	Sq Ft Needed	Existing R Value	Proposed R Value	Description	Current Heating MMBTU's	Current Cooling MMBTU's	Description	Proposed Heating MMBTU's	Proposed Cooling MMBTU's	Notes	Heat Savings in Therms	Cooling Savings in kWh
Education Learning Center (YELLOW CREEK)	4	0.83	7.00	THERMAX INSULATION	0.63	0.10	RAISE R-VALUES USING THERMAX INSULATION	0.07	0.01	BASEMENT WINDOW	7.12	9.26

Clear Creek

1. Maintenance (CLEAR CREEK)
2. Nature Center (CLEAR CREEK)
3. Small Cabins Type A 4 (CLEAR CREEK)
4. Small Cabins Type B 6 (CLEAR CREEK)
5. Small Cabin Showerhouse (CLEAR CREEK)
6. Camp Ground Showerhouse (CLEAR CREEK)
7. Large Cabin Showerhouse (CLEAR CREEK)
8. Water Treatment (CLEAR CREEK)
9. Large Cabins 12 (CLEAR CREEK)
10. Park Office (CLEAR CREEK)
11. Residence-Across from Park Office (CLEAR CREEK)



Old worn insulation requiring new insulation to add R-Value

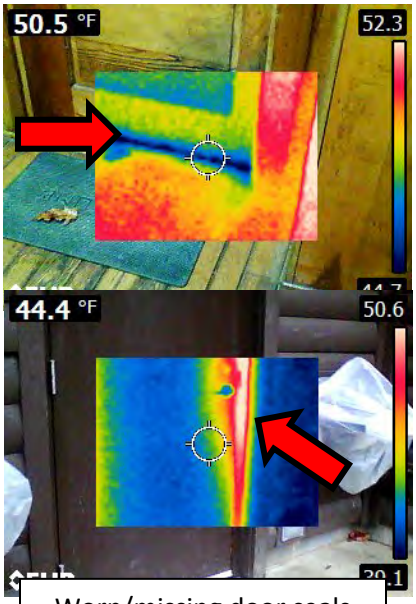

Worn/missing door seals showing visible air leaks



Existing plywood in place of window, Install thermal panel to add R-Value



Worn/missing garage door seals showing visible gaps

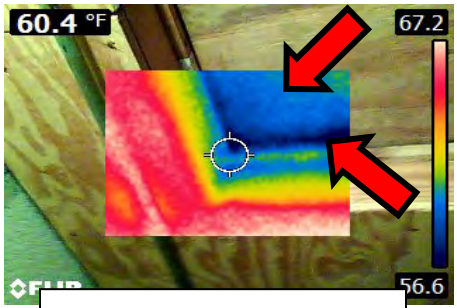

Uninsulated and unsealed attic hatch

©2013 Energy Systems Group, LLC

Clear Creek Forestry #8

1. Maintenance (#8 CLEAR CREEK FORESTRY)
2. Carpenter Shop (#8 CLEAR CREEK FORESTRY)
3. Office (#8 CLEAR CREEK FORESTRY)
4. Office Shop (#8 CLEAR CREEK FORESTRY)

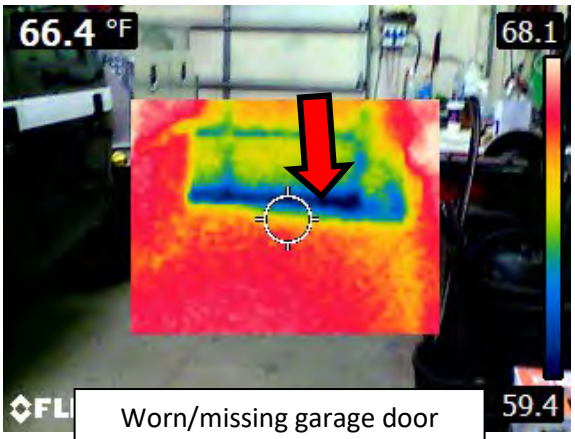

Worn/missing garage door seals showing visible air leaks

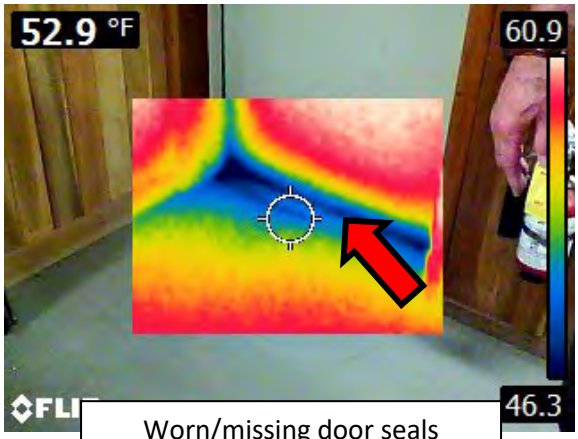

Worn/missing door seals showing visible air leaks

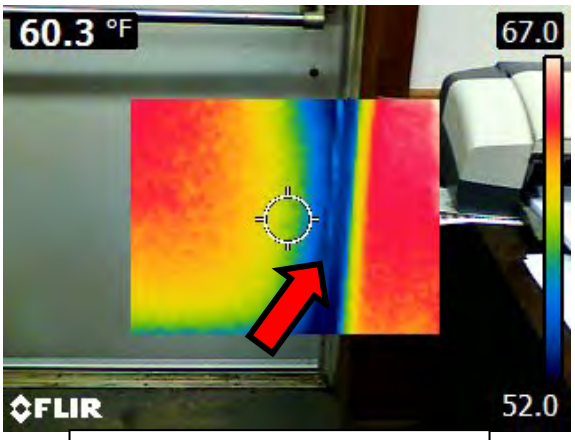

Worn/missing door seals showing visible air leaks

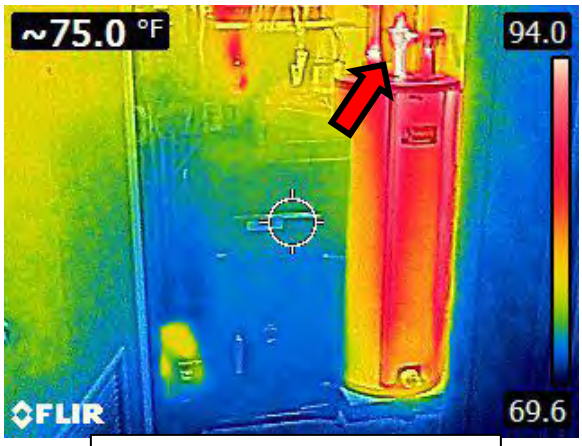

Uninsulated pipes on hot water heater

©2013 Energy Systems Group, LLC

Cooks Forest

1. Waste Water (COOK FOREST)
2. Inn (COOK FOREST)
3. Bath House (COOK FOREST)
4. Public Restroom (COOK FOREST)
5. Indian Showerhouse (COOK FOREST)
6. Indian Cabins 11 (COOK FOREST)
7. Contact Station (COOK FOREST)
8. Day Use Restroom-by Log Cabin Inn/Maintenance (COOK FOREST)
9. Water Shed (COOK FOREST)
10. Maintenance (COOK FOREST)
11. Mechanic Shop (COOK FOREST)
12. Carpenter Shop (COOK FOREST)

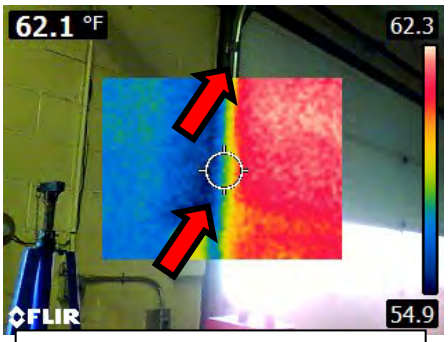

Worn/missing garage door seals showing visible air leaks and gaps



Uninsulated pipes on hot water heater

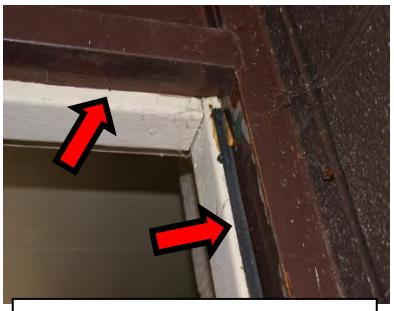

Worn, missing, and poorly installed door seal

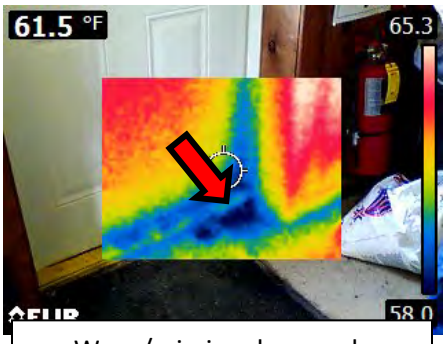

Worn/missing door seals showing visible air leaks



Worn door seal

©2013 Energy Systems Group, LLC

Cornplanter Forestry #14

1. Warren Office (CORNPLANTER)
2. Warren Shop (CORNPLANTER)
3. Warren Garage (CORNPLANTER)
4. Hunter Run Office (CORNPLANTER)

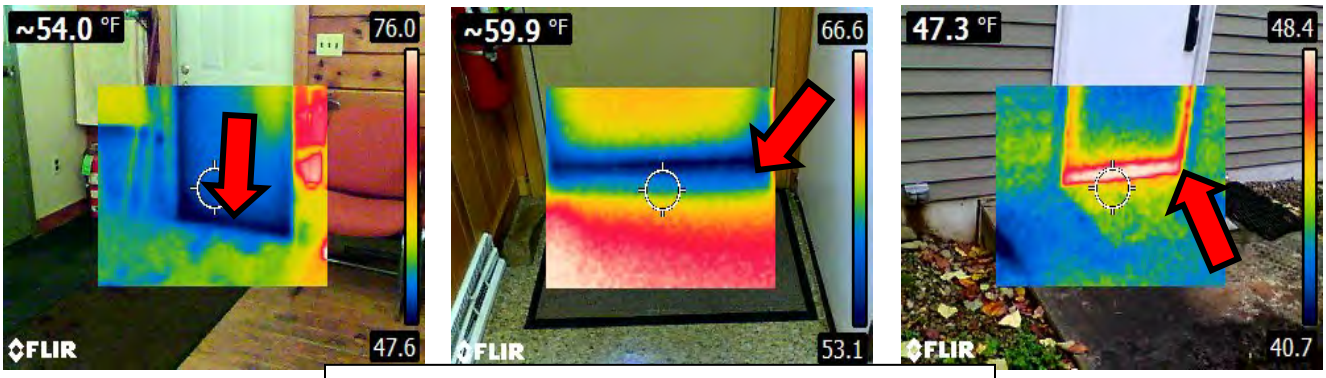

Worn/missing door seals showing visible air leaks

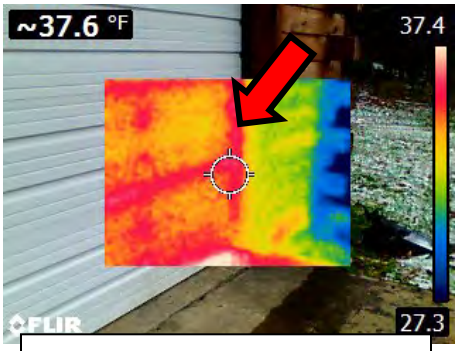

Worn/missing garage door seals showing visible air leaks

©2013 Energy Systems Group, LLC

Forbes Forestry #4

1. Office (FORBES FORESTRY 4)
2. Laurel Mt. Maintenance (FORBES FORESTRY4)
3. Maintenance- 1200 Skyline Drive Farmington (FORBES FORESTRY 4)
4. Mt. Davis Maintenance- 1889 S. Wolf Rock Rd. (FORBES FORESTRY 4)

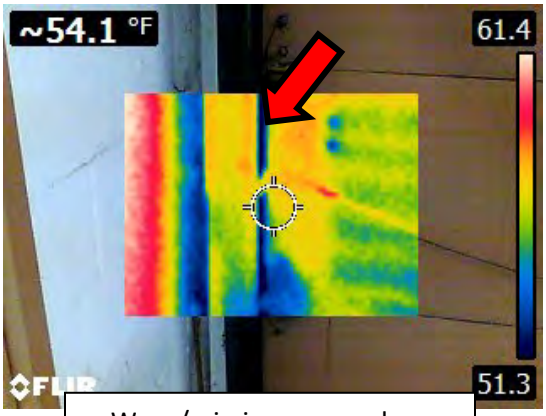

Worn/missing garage door seals showing visible air leaks

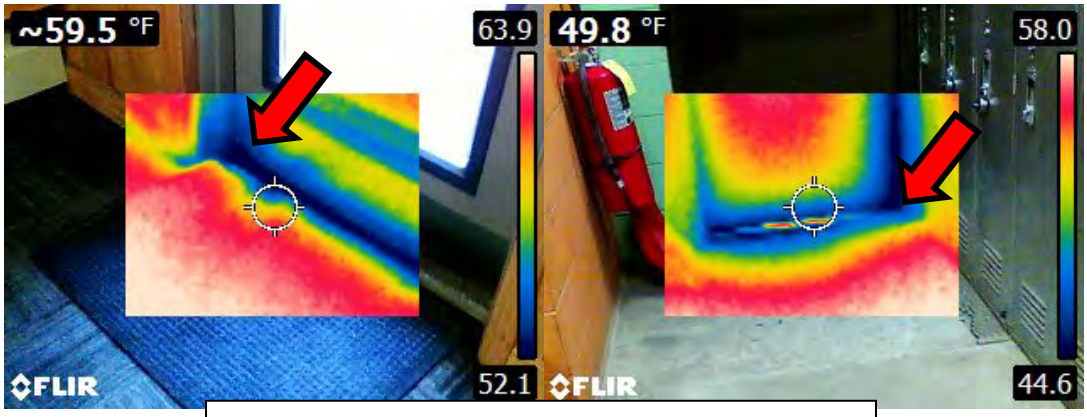

Worn/missing door seals showing visible air leaks

©2013 Energy Systems Group, LLC

Gallitzin Forestry #6

1. Babcock Maintenance 1 (GALLITZIN FORESTRY 6)
2. Babcock Maintenance 2 (GALLITZIN FORESTRY 6)
3. Blair Fire Station (GALLITZIN FORESTRY 6)

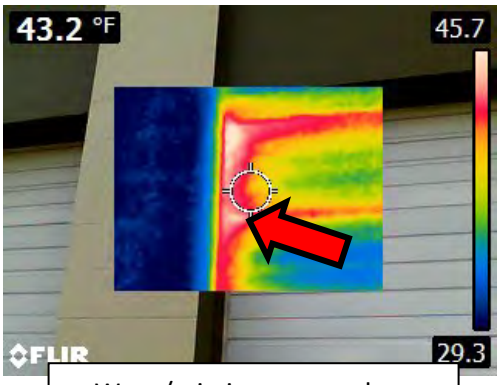

Worn/missing garage door seals showing visible air leaks

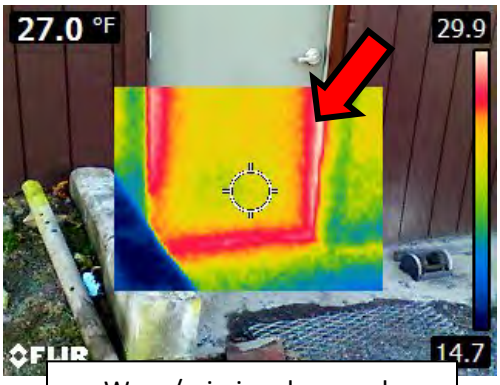

Worn/missing door seals showing visible air leaks

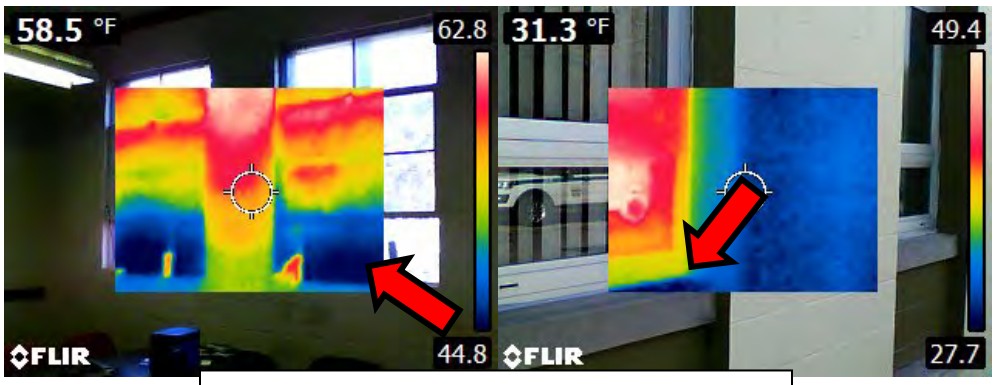

Replace old single pane windows with energy efficient double pane windows

©2013 Energy Systems Group, LLC

Goddard

1. Park Office/Maintenance/Carpenter (GODDARD)
2. Residence (GODDARD)
3. Launch 3 Restroom (GODDARD)
4. Launch 4 Restroom (GODDARD)
5. Dam Restroom (GODDARD)

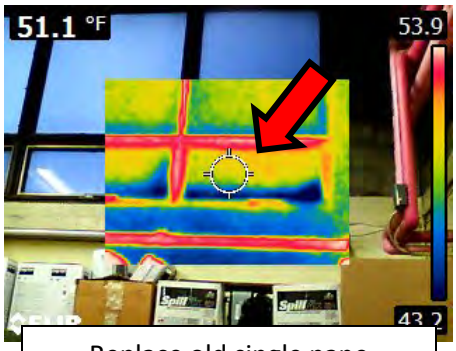

Replace old single pane windows with energy efficient double pane windows

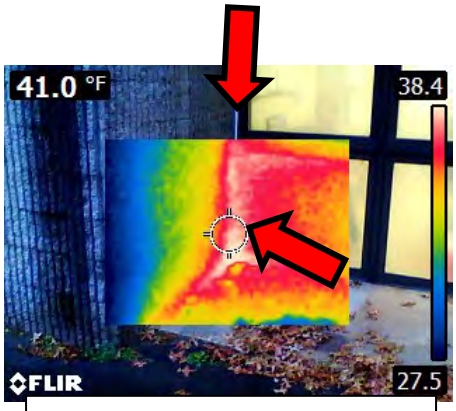

Worn/missing caulk at wall to window joint

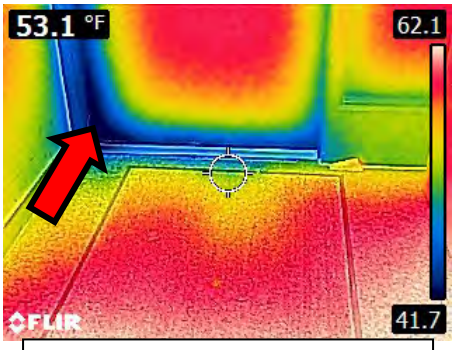

Worn/missing door seals showing visible air leaks

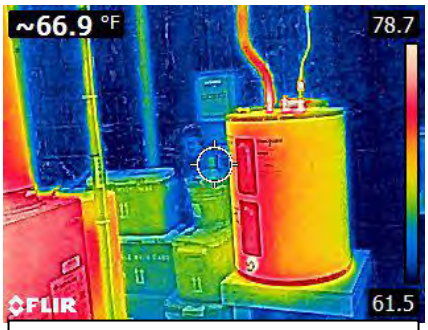

Uninsulated pipes on hot water heater

©2013 Energy Systems Group, LLC

Jennings

1. Maintenance Shop (JENNINGS)
2. Education Center (JENNINGS)

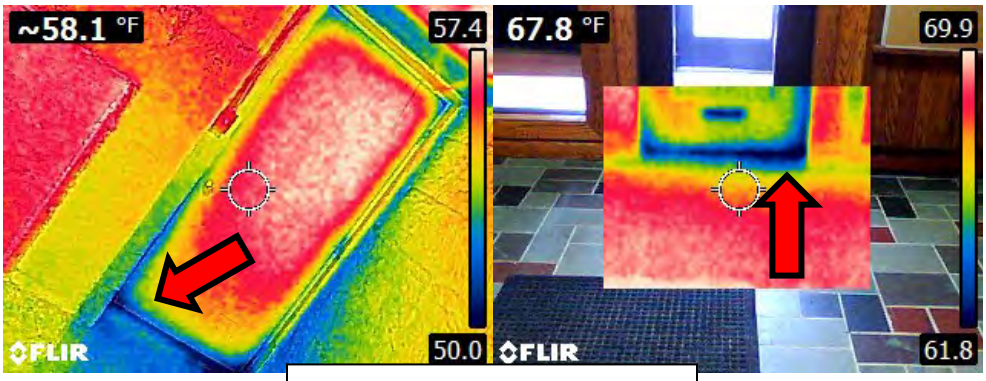

Worn/missing door seals showing visible air leaks

Keystone

1. Mortin Restroom (KEYSTONE)
2. Visitor Center (KEYSTONE)
3. Maintenance (KEYSTONE)
4. Showerhouse (KEYSTONE)
5. Cabins 11 (KEYSTONE)
6. Residence- by Maintenance (KEYSTONE)

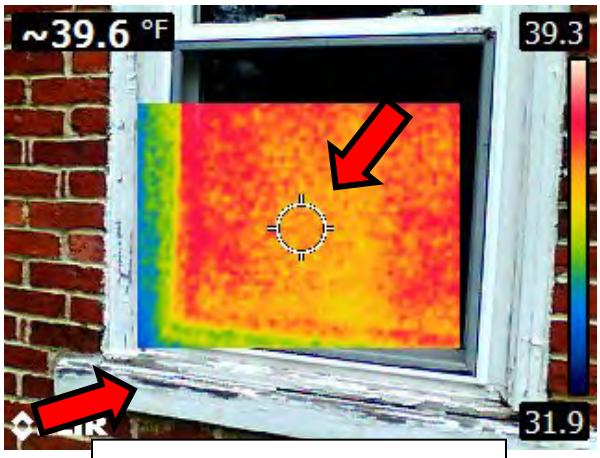

Replace old single pane windows and frames with energy efficient double pane windows

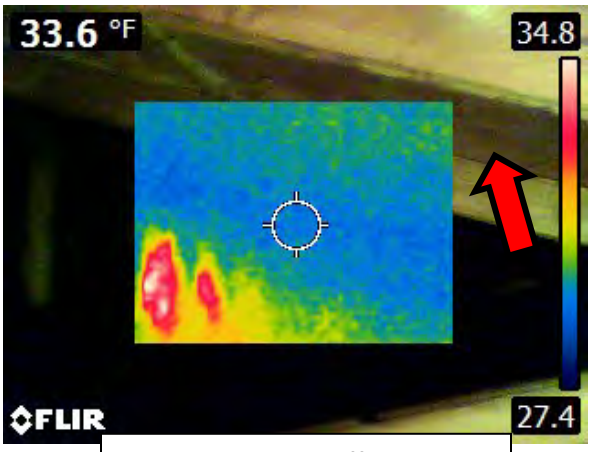

Uninsulated or inefficient batt insulation in crawl space of cabins, replace with spray foam insulation

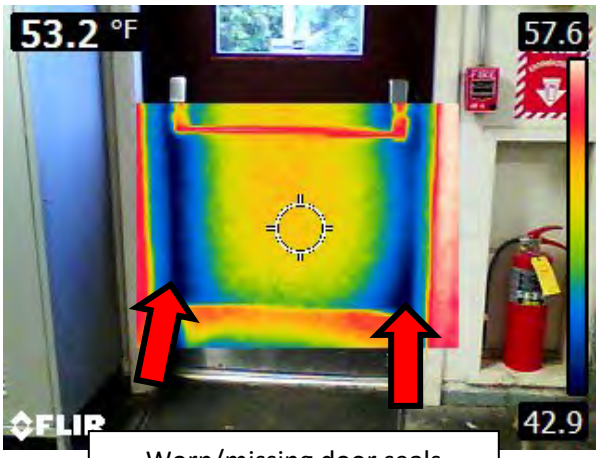

Worn/missing door seals showing visible air leaks

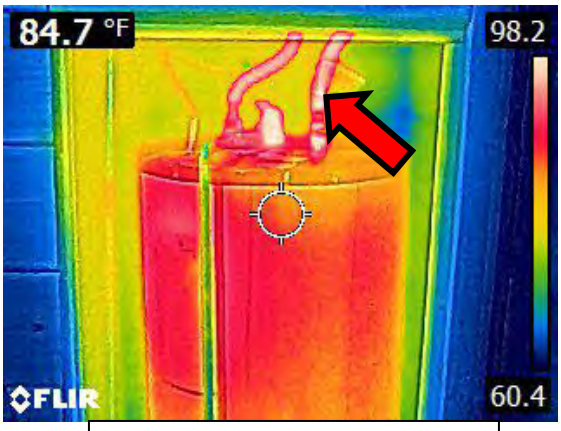

Uninsulated pipes on hot water heater

©2013 Energy Systems Group, LLC

Kooser

1. Park Office (KOOSER)
2. Residence- by Office (KOOSER)
3. Cabins 8 (KOOSER)
4. Cabin Showerhouse (KOOSER)
5. Modern Cabin 1 (KOOSER)
6. Wellhouse (KOOSER)

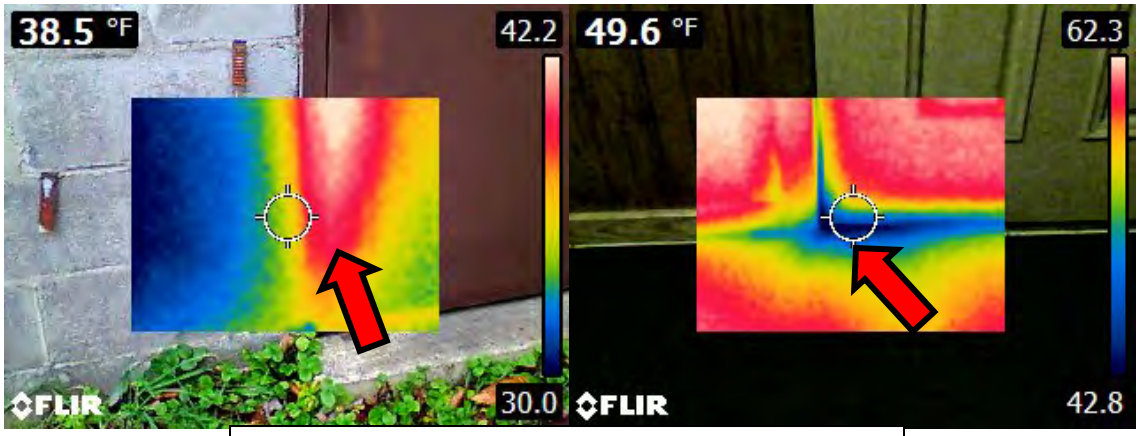

Worn/missing door seals showing visible air leaks

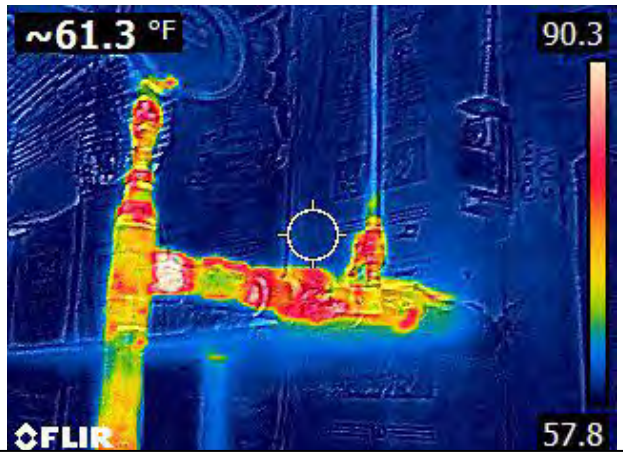

poorly insulated pipe on hot water heater

©2013 Energy Systems Group, LLC

Laurel Hill

1. Lodge (Laurel Hill)
2. Residence Camp Rd. (Laurel Hill)
3. Lakeside Lodge (Laurel Hill)
4. Stable Lodge (Laurel Hill)
5. Residence-118 by Barn Lodge (Laurel Hill)
6. Lift Station- Picnic Area (Laurel Hill)
7. Waste Water (Laurel Hill)
8. Wellhouse (Laurel Hill)
9. Visitor Center (Laurel Hill)
10. Restroom 2 (Laurel Hill)
11. Residence Office by Office (Laurel Hill)
12. Park Office (Laurel Hill)
13. Maintenance (Laurel Hill)
14. Mechanic Shop (Laurel Hill)
15. Carpenter Shop (Laurel Hill)
16. Residence- Top of hill by Office (Laurel Hill)
17. Lodge-Huffman (Laurel Hill)

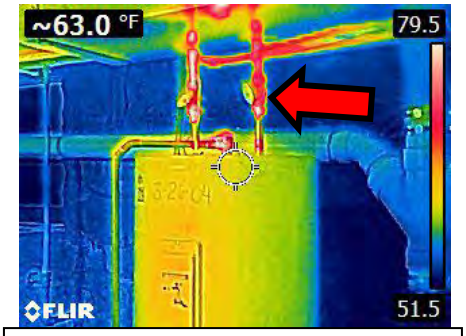

uninsulated pipes on hot water heater

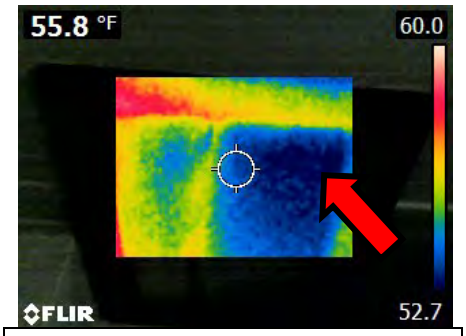

Attic has old ineffective insulation and needs added R-value

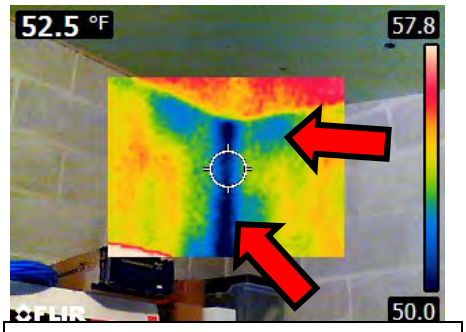

Seal roof wall and wall joint seals

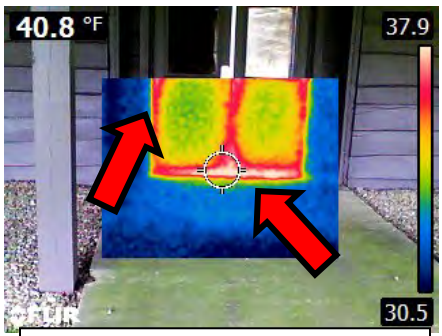

Worn/missing door seals showing visible air leaks

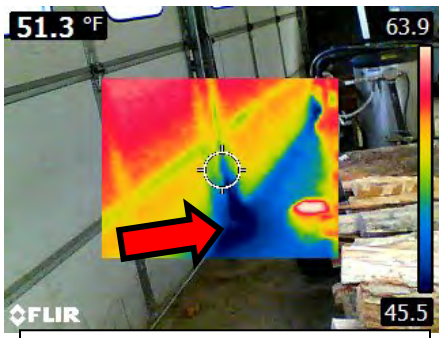

Worn/missing garage door seals showing visible air leaks

©2013 Energy Systems Group, LLC

Laurel Ridge

1. Maintenance (Laurel Ridge)
2. Ski Lodge (Laurel Ridge)
3. Ski Hut (Laurel Ridge)

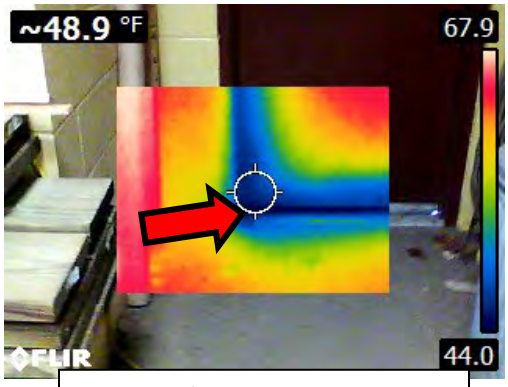

Worn/missing door seals showing visible air leaks

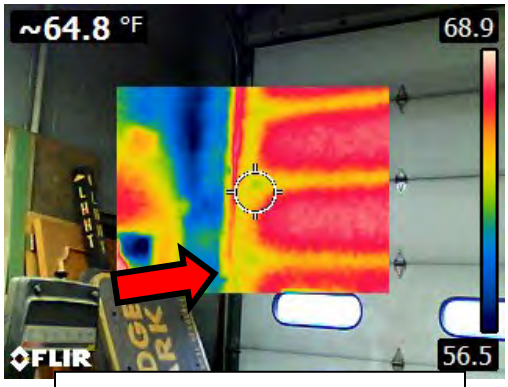

Worn/missing garage door seals showing visible air leaks

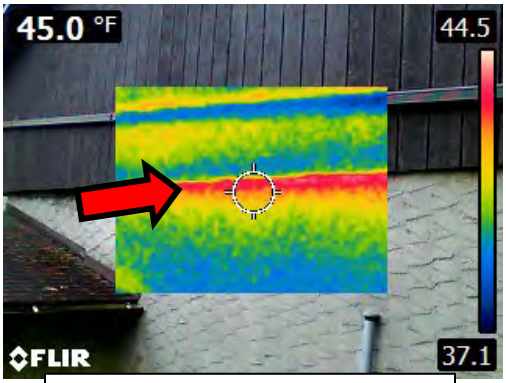

Maintenance built a pitched roof above their flat roof where they added insulation, however, they have a leak at their roof-wall intersection

©2013 Energy Systems Group, LLC

Linn Run

1. Park Office (LINN RUN)
2. Cabins 10 (LINN RUN)
3. Bath House (LINN RUN)
4. Residence (LINN RUN)
5. Storage Maintenance (LINN RUN)
6. Breakroom (LINN RUN)
7. Truck Bay (LINN RUN)
8. Carpenter Shop (LINN RUN)

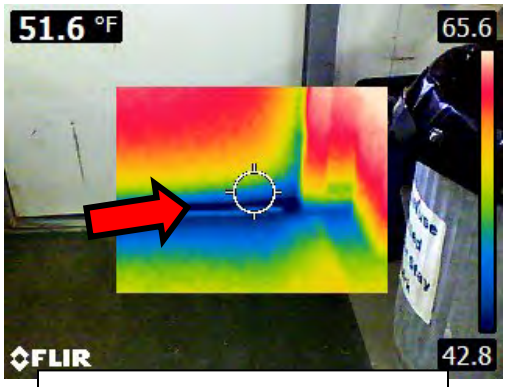

Worn/missing door seals showing visible air leaks

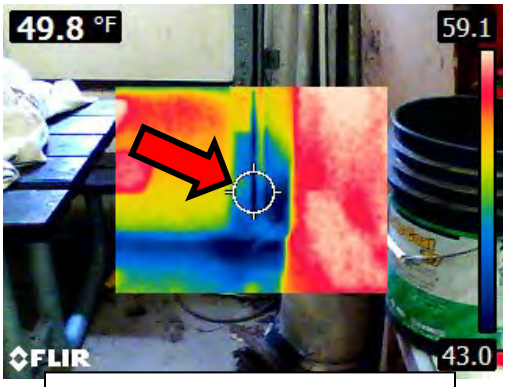

Worn/missing garage door seals showing visible air leaks

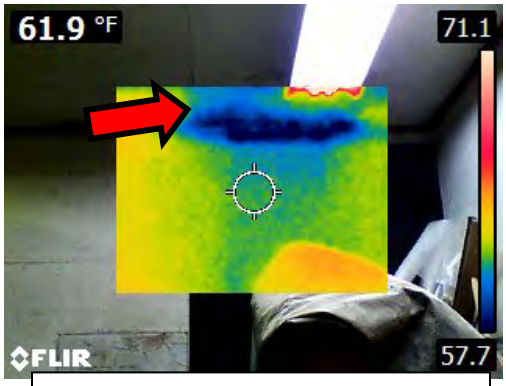

Attic has old ineffective insulation and needs added R-value

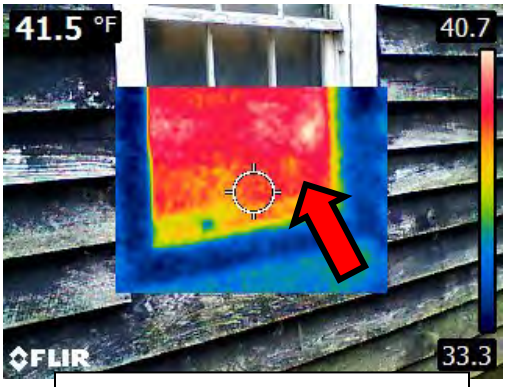

Replace old single pane windows and frames with energy efficient double pane windows

©2013 Energy Systems Group, LLC

McConnell's Mill

1. Maintenance (McCONNELL'S MILL)

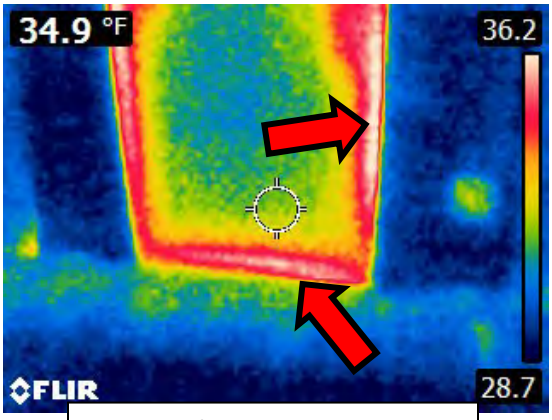

Worn/missing door seals showing visible air leaks

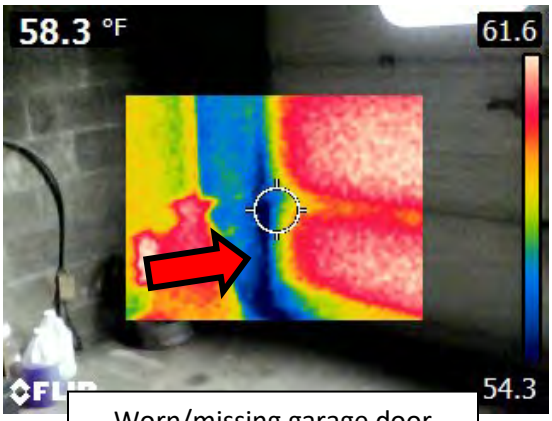

Worn/missing garage door seals showing visible air leaks

©2013 Energy Systems Group, LLC

Moraine

2. Residence- 200 N. Shore Drive (MORAINE)
3. North Shore Maintenance (MORAINE)
4. Camp Ground Restroom (MORAINE)
5. Cabins 11 (MORAINE)
6. Water Treatment (MORAINE)
7. Marina Office/Garage (MORAINE)
8. Residence- 197 Park Rd. (MORAINE)
9. Residence- 300 Park Rd. (MORAINE)
10. Residence- 150 Park Rd. (MORAINE)
11. 528 Launch Restroom (MORAINE)
12. Pleasant Valley Restroom by Maintenance (MORAINE)
13. Maintenance South Shore (MORAINE)
14. Park Office (MORAINE)
15. 105 Big Run (MORAINE)
16. Residence-"Greenhouse" by Park Office (MORAINE)

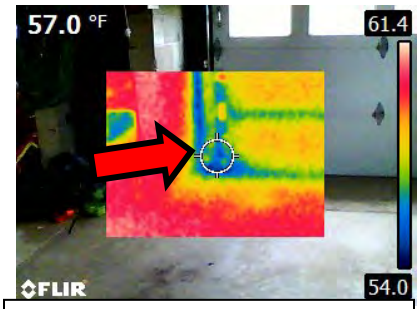

Worn/missing garage door seals showing visible air leaks

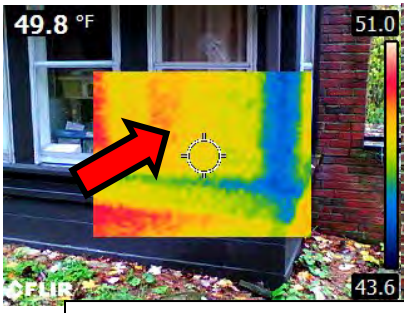

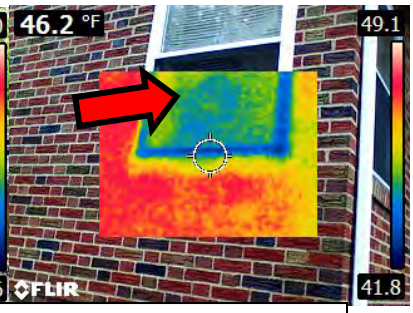

Replace old single pane windows and frames with energy efficient double pane windows

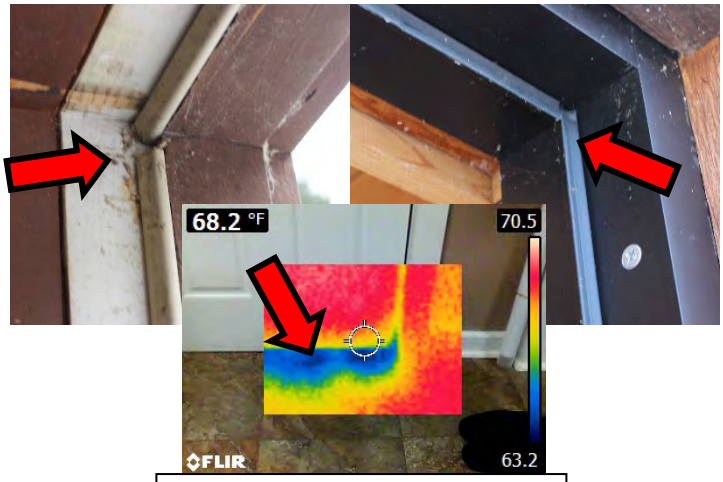

Worn/missing door seals showing visible air leaks



uninsulated pipes on hot water heaters

©2013 Energy Systems Group, LLC

Ohiopyle

1. Visitor Center/Office (OHIOPYLE)
2. Train Station (OHIOPYLE)
3. Residence- 2105 Mill Run Rd. (OHIOPYLE)
4. Residence- 150 King Rd. (OHIOPYLE)
5. Stonehouse Inn- 180 Main St (OHIOPYLE)
6. Guided Boater Restroom (OHIOPYLE)
7. Maintenance (OHIOPYLE)
8. Public Safety (OHIOPYLE)
9. Campground Contact Station (OHIOPYLE)
10. Wellhouse (OHIOPYLE)
11. Sewage (OHIOPYLE)
12. Showerhouse (OHIOPYLE)
13. Cabins 7 (OHIOPYLE)
14. Photos/River Rescue (OHIOPYLE)

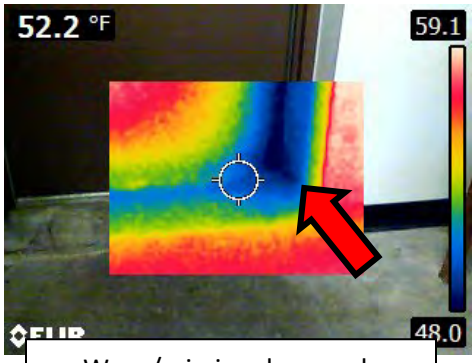

Worn/missing door seals showing visible air leaks

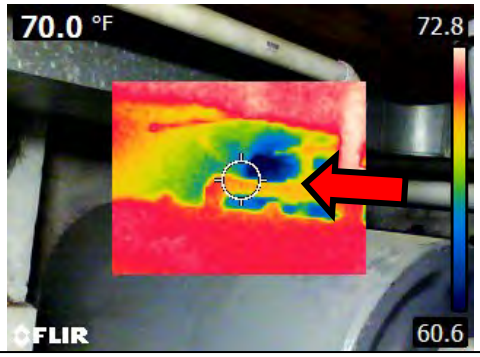

Unsealed penetration in the basement leading to exterior pipe chase

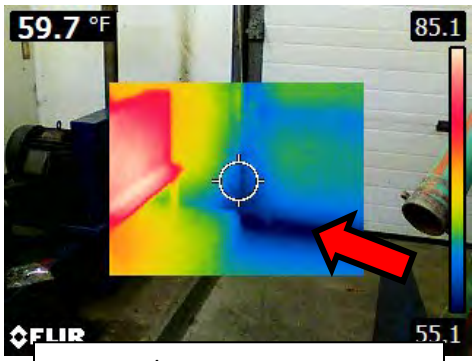

Worn/missing garage door seals showing visible air leaks



Worn/missing seal around A/C unit causing visible air leaks

©2013 Energy Systems Group, LLC

Oil Creek

1. Park Office/Education Center (OIL CREEK)
2. Pumphouse (OIL CREEK)
3. Train Station (OIL CREEK)
4. Maintenance & Water Storage (OIL CREEK)
5. Residence- by Maintenance (OIL CREEK)

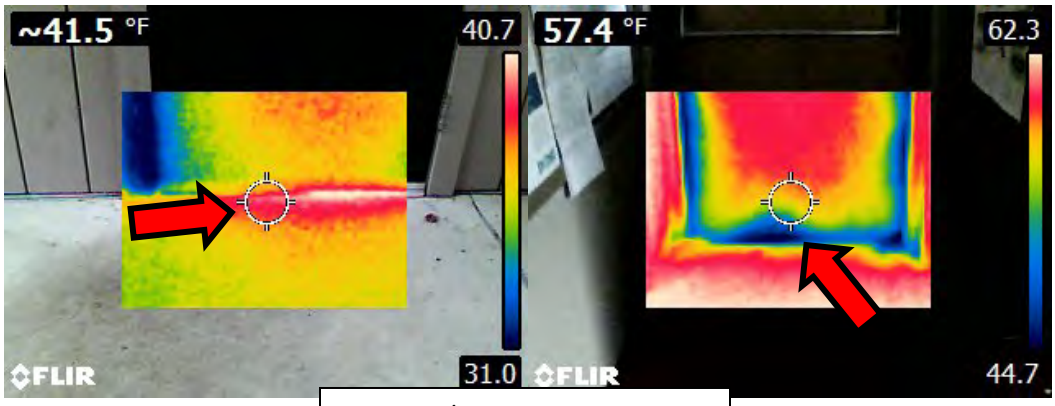

Worn/missing door seals showing visible air leaks

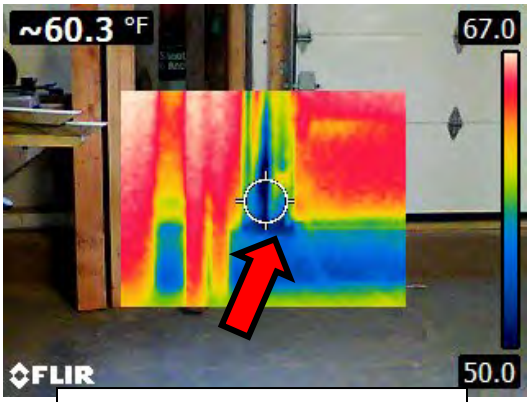

Worn/missing garage door seals showing visible air leaks

©2013 Energy Systems Group, LLC

Point State

1. Office/Ranger Station (POINT STATE)
2. Pump House (POINT STATE)
3. Restroom (POINT STATE)
4. Concession (POINT STATE)

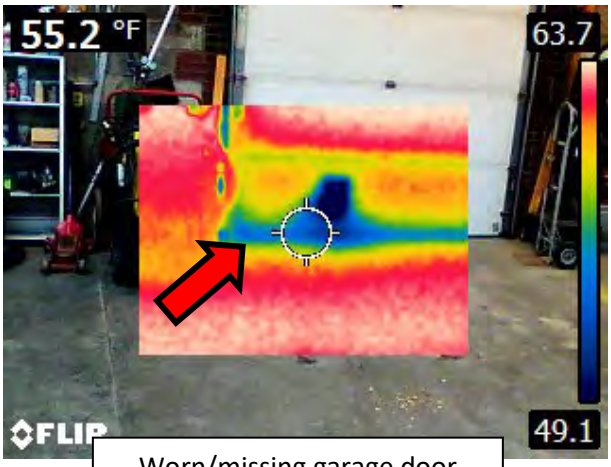

Worn/missing garage door seals showing visible air leaks

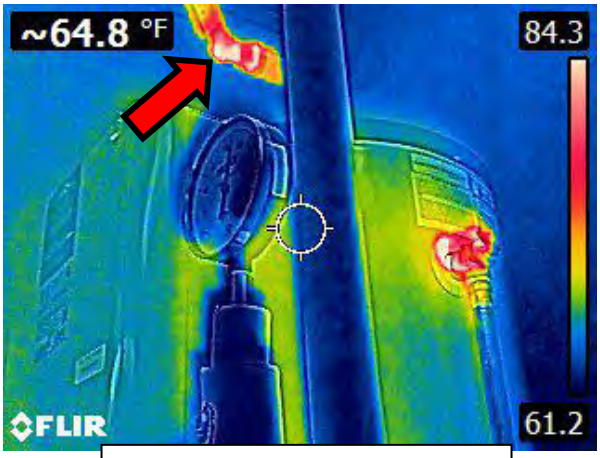

uninsulated pipes on hot water heater

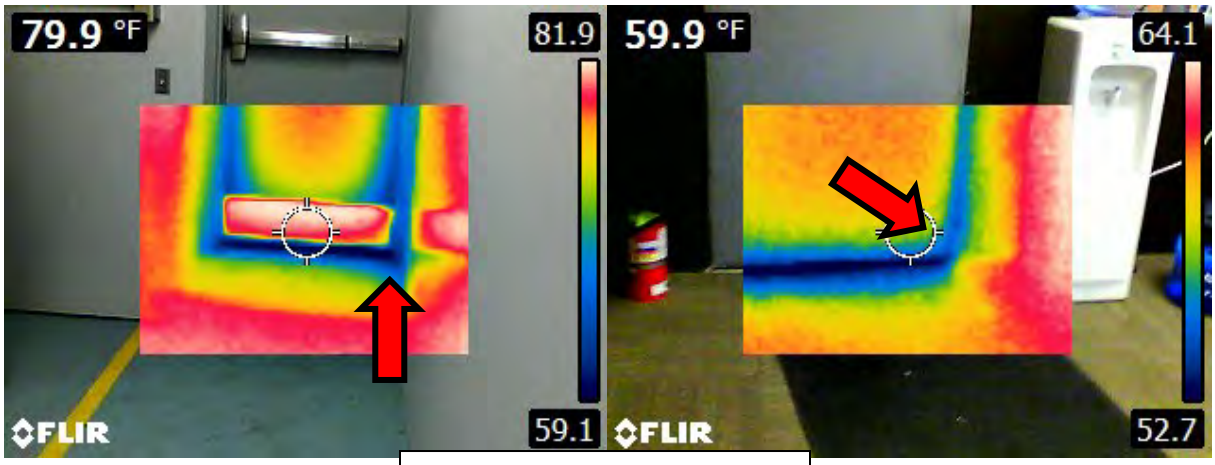

Worn/missing door seals showing visible air leaks

©2013 Energy Systems Group, LLC

Presque

1. Tom Ridge Center (PRESQUE)
2. Stull Interpretive Center (PRESQUE)
3. Ranger Station (PRESQUE)
4. Niagara Restroom (PRESQUE)
5. Residence-On Campus (PRESQUE)
6. Marina Bath house (PRESQUE)
7. Marina Office (PRESQUE)
8. Scenic Restroom (PRESQUE)
9. Maintenance (PRESQUE)
10. Lighthouse (PRESQUE)
11. Water Work Rotary (PRESQUE)
12. Residence- 2514 North Tracy (PRESQUE)
13. Residence- 1137 Dutch (PRESQUE)
14. Residence-8075 West Lake (PRESQUE)

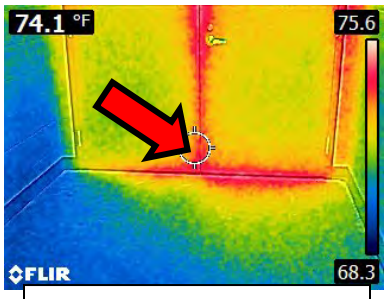

Worn/missing door seals showing visible air leaks

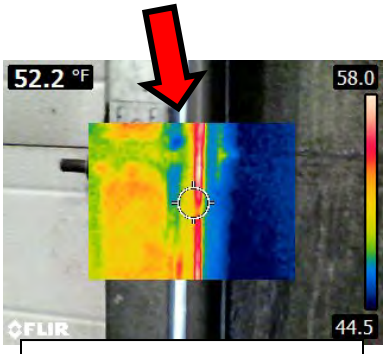

Worn/missing garage door seals showing visible air leaks and gaps

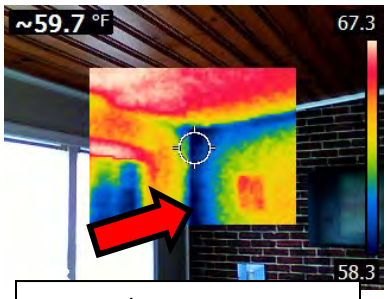

Worn/missing caulk at wall joint seal on addition



Poorly insulated mech room with old deteriorating batt insulation

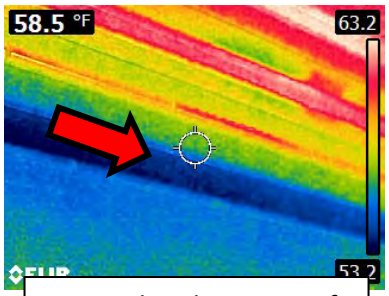

Uninsulated gap at roof wall intersection

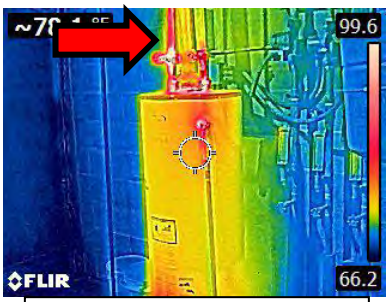

Uninsulated pipes on hot water heater

©2013 Energy Systems Group, LLC

Pymatuning

1. Residence-Across from Ranger Station (PYMATUNING)
2. Ranger Station (PYMATUNING)
3. Laundry House (PYMATUNING)
4. Cabins 25 (PYMATUNING)
5. Marina Restroom (PYMATUNING)
6. Education Center and Concession (PYMATUNING)
7. Bayview Drive Restroom (PYMATUNING)
8. Maintenance (PYMATUNING)
9. Residence- Dan's (PYMATUNING)
10. Spillway Restroom and Concession (PYMATUNING)
11. Residence- Scott's (PYMATUNING)
12. Park Office (PYMATUNING)

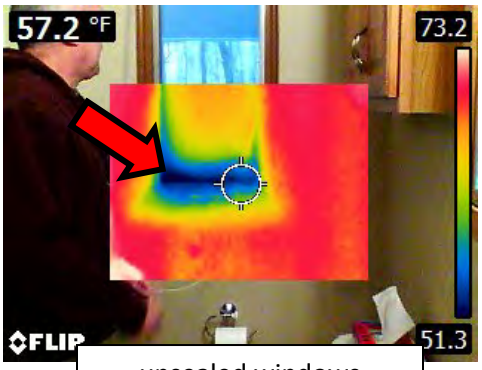

unsealed windows leaving visible air leaks

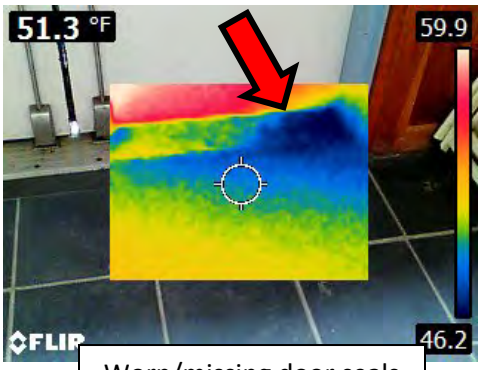

Worn/missing door seals showing visible air leaks



Poorly installed inefficient double pane windows with gaps exposed to the exterior elements



Raise R-value of insulation in attic spaces and insulate basement spaces

©2013 Energy Systems Group, LLC

Raccoon

1. Park Office (RACCOON)
2. Cabins 1-6 & 10 (7) (RACCOON)
3. Linsly Residence (RACCOON)
4. Rec Center (RACCOON)
5. Contact Station (RACCOON)
6. Boat Rental (RACCOON)
7. Beach Concession (RACCOON)
8. Water Treatment (RACCOON)
9. Sewage (RACCOON)
10. Lake Side Lodge (RACCOON)
11. Nature Center (RACCOON)
12. Residence- by Nature Center (RACCOON)
13. Residence- Sarah's (RACCOON)
14. Residence Loft- Sarah's (RACCOON)

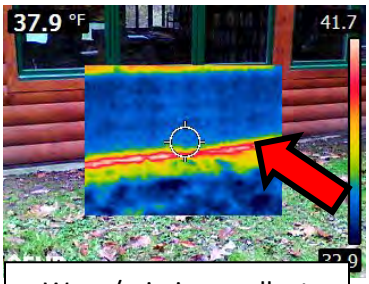

Worn/missing caulk at wall joint seal on addition

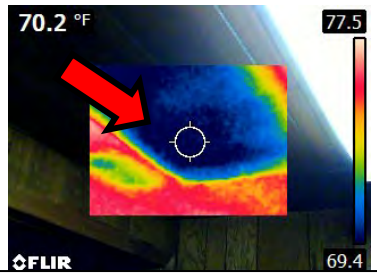

Raise R-value of insulation in attic spaces and insulate basement spaces



Current maintenance building is old and has numerous amounts of air leaks, it is recommended to finish renovations and move into the building that caught fire

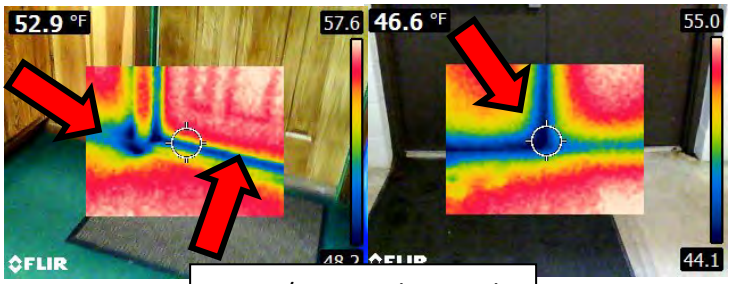

Worn/missing door seals showing visible air leaks



uninsulated pipes on hot water heater

©2013 Energy Systems Group, LLC

Region 2 Office

1. Maintenance (REGION 2)
2. Carpenter Shop (REGION 2)
3. Office (REGION 2)

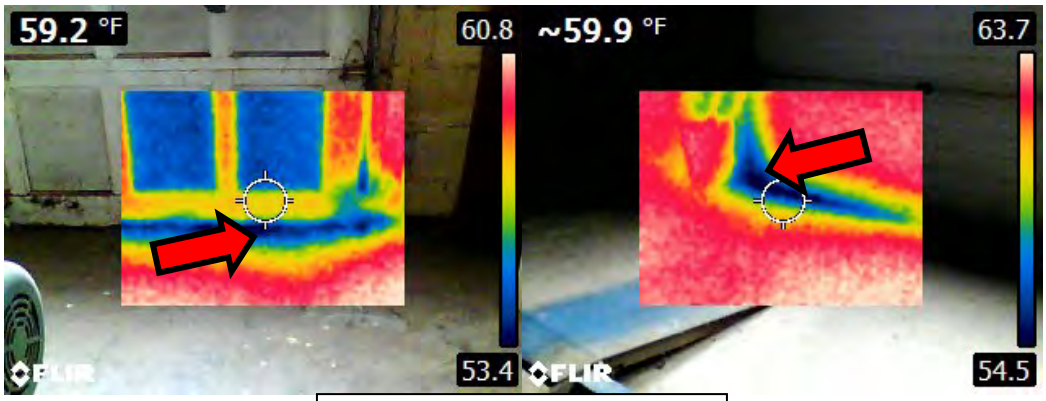

Worn/missing garage door seals showing visible air leaks

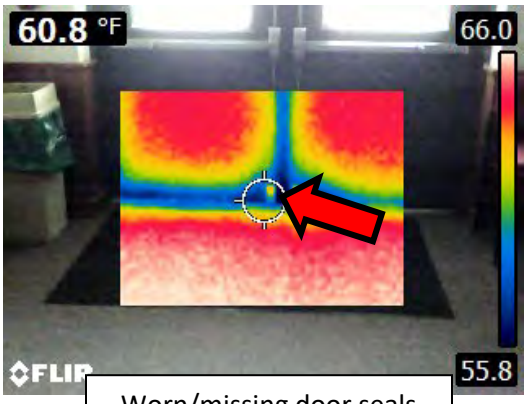

Worn/missing door seals showing visible air leaks

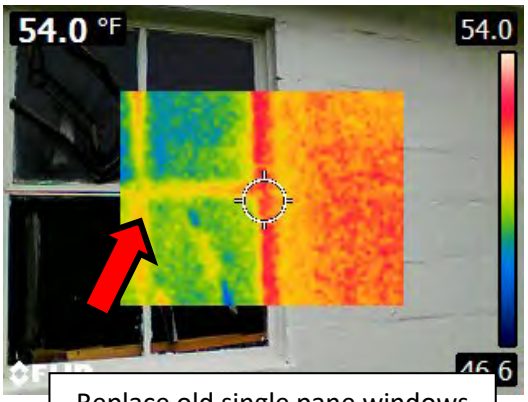

Replace old single pane windows and frames with energy efficient double pane windows

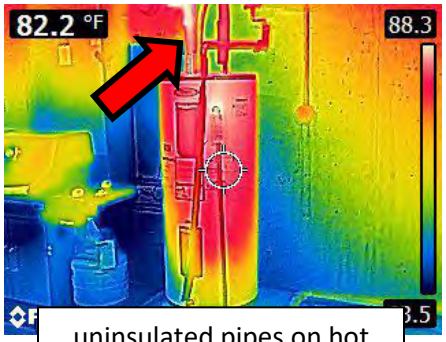

uninsulated pipes on hot water heaters

©2013 Energy Systems Group, LLC

Ryerson

1. Park Office (RYERSON)
2. Maintenance Back Building (RYERSON)
3. New Maintenance (RYERSON)
4. Sewage (RYERSON)
5. Residence (RYERSON)
6. Cabins 2 (RYERSON)

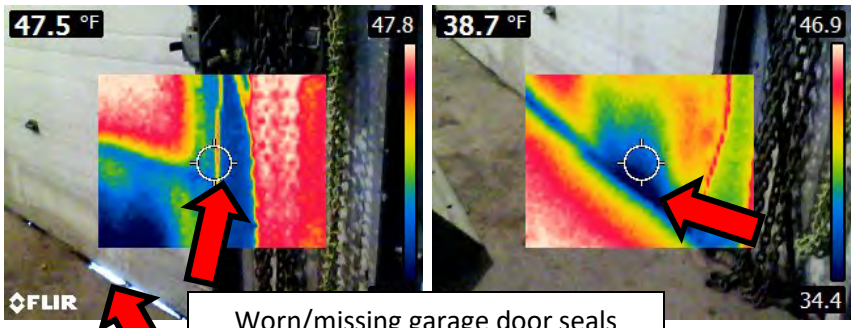

Worn/missing garage door seals showing visible air leaks and gaps



Worn/missing door seals showing visible air leaks



uninsulated pipes on hot water heater

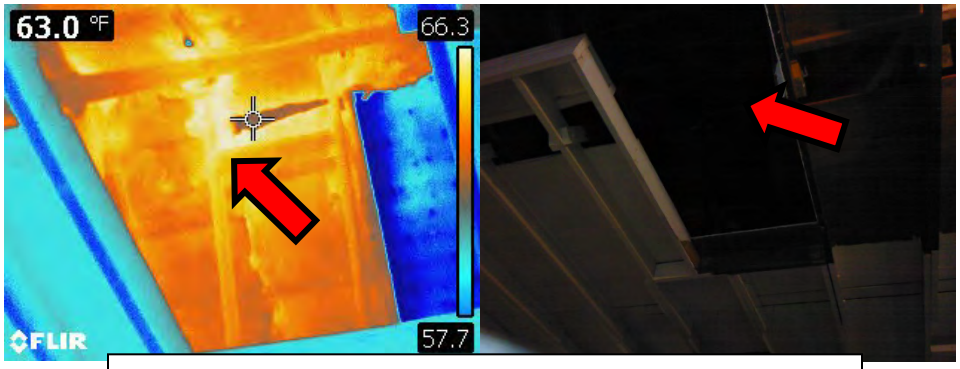

Attic floor is insulated but floor is opened to the garage, we recommend spray foaming the ceiling of the attic

©2013 Energy Systems Group, LLC

Yellow Creek

1. Park Office (YELLOW CREEK)
2. Residence- by Maintenance (YELLOW CREEK)
3. Education Learning Center (YELLOW CREEK)
4. Maintenance (YELLOW CREEK)
5. Bath House (YELLOW CREEK)
6. Cottages 6 (YELLOW CREEK)

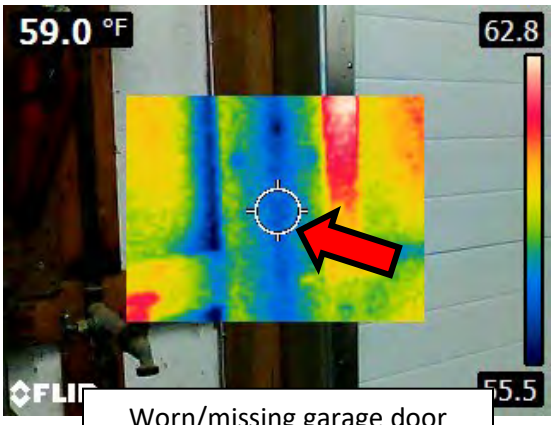

Worn/missing garage door seals showing visible air leaks

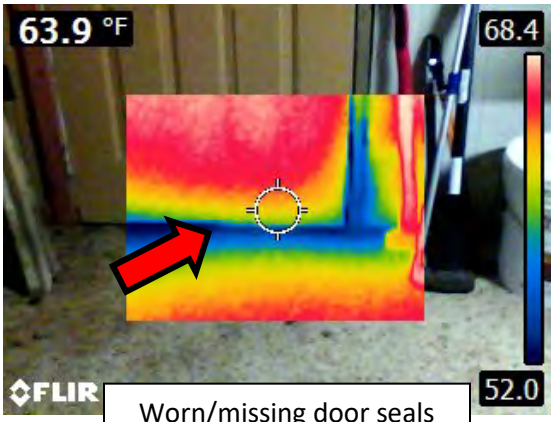

Worn/missing door seals showing visible air leaks

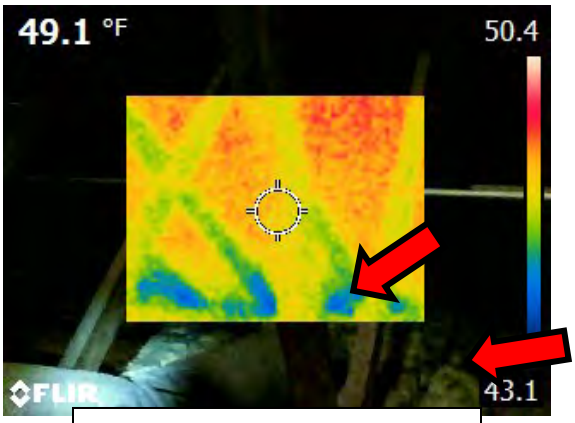

Raise R-value of insulation in attic spaces

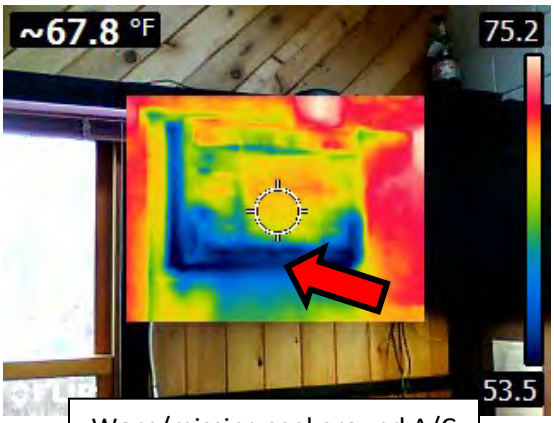

Worn/missing seal around A/C unit causing visible air leaks

©2013 Energy Systems Group, LLC

ENERGY SAVINGS CALCULATIONS

MECHANICAL EQUIPMENT UPGRADES

©2013 Energy Systems Group, LLC

©2013 Energy Systems Group, LLC

ECM TREC-1
CORRECT EXCESSIVE PRESSURE IN OBSERVATION TOWER

CALCULATIONS TO INSTALL TOWER EXHAUST FAN CONTROLS

FIM #1

Client: TREC
Address: Erie,PA

Type: **Electricity**
Units: **kwh**

CF2 1.085 Btu/hr-deg F-cfm
Cooling Energy Use: **0.92** kw per ton

DATA:

	CFM	HP	% loading	Motor Eff	kW
EF-4	6,800	1	75%	85.5%	0.65
EF-5	6,800	1	75%	85.5%	0.65
EF-6	6,800	1	75%	85.5%	0.65
EF-7	6,800	1	75%	85.5%	0.65

20% of time intake grill is plugged with debris
15% of exhausted air is from the main building

		Present Conditions						Proposed Conditions					
All Bin	Occupied Hours	# of Exaust Fans	Annual kWh	Est. CFM	Cooling Load Btuh	Cooling Load Btu/yr	Cooling kwh	# of Exaust Fans	Annual kWh	Est. CFM	Cooling Load Btuh	Cooling Load Btu/yr	Cooling kwh
57.5	235	0	0	0				0	0	0	0	0	0
62.5	339	2	444	2,720				1	222	0	0	0	0
67.5	261	2	342	2,720				1	171	0	0	0	0
72.5	355	4	929	5,440	14,756	1,047,676	80.6	2	465	0	0	0	0
77.5	300	4	785	5,440	44,268	2,656,080	204.3	3	589	0	0	0	0
82.5	195	4	510	5,440	73,780	2,877,420	221.3	3	383	0	0	0	0
87.5	17	4	44	5,440	103,292	351,193	27.0	4	44	0	0	0	0
92.5	12	4	31	5,440	132,804	318,730	24.5	4	31	0	0	0	0
	1,714		3,086				557.8		1,905				0

CALCULATIONS:

Energy Usage = CFM x Accumulated Hours x Temp Diff x CF2

©2013 Energy Systems Group, LLC

ECM TREC-7A
REPLACE AHU 3

CALCULATIONS TO REPLACE OR REPAIR HVAC-3 (OCCUPIED)

FIM #6

Client: TREC
Address: Erie,PA

INPUT DATA:

Exhaust Operating Hours: **168** hours per week during the Heating Season
% of time operating: 100%

AHU Discharge Air Temperature: **70** °F

Proposed Heat Recovery Efficiency: **58%**
Additional Fan Static Pressure: **0.00** inches w.c.
Fan Efficiency: **60%**

Heating Fuel: **Natural Gas**
Heat Content: **103,000** Btu per ccf
Boiler Efficiency: **85.0%**

Additonal Electrical Power Requi

Fans
Supply air: 0.00 HP
Exhaust air: 0.00 HP

Pump Data
55 GPM
45 ft. head
55% Pump eff.
1.14 BHP
90.0% Motor Eff.
0.95 kW

	Outdoor Air	Exhaust Air	
	CFM	CFM	Temp
Air Flows:(Design)	**11,785**	**10,365**	
Air Flows (DDC Measured):	**9,124**	**9,384**	**70**
Motor Efficiency:	**93.6%**	**93.0%**	
	25HP	15HP	

Persent Cooling Energy Use: **0.78** kw per ton
Proposed Cooling Energy Use: **0.647** kw per ton

Heat recovery system is not used if outdoor air temperature
a) is within **2** degrees of discharge air setpoint or
b) is above **100** degrees

Bin Data for

Bin Data		Req'd	Make-up Air Unit Operating Costs - Present				Heat Recovery Unit		Future Operating Costs - w/ Heat Recovery Unit				Add'l. Energy		
			Energy Required		Heating	Cooling	Potential	Actual			Heating	Cooling	Fan	Pump	
Temp.	Hours	SAT+ Reheat	Btuh	Btu/yr	ccf	kwh	ΔT	LAT	Btuh	Btu/yr	ccf	kwh	kwh	kwh	
92.5	**6**	55.0	(371,233)	(2,253,913)	0	147	(13.1)	79.4	(241,754)	(1,467,793)	0	79	0	0	
87.5	**11**	56.2	(310,313)	(3,454,074)	0	225	(10.2)	77.3	(209,607)	(2,333,125)	0	126	0	0	
82.5	**112**	57.3	(249,392)	(27,885,914)	0	1,818	(7.3)	75.2	(177,460)	(19,842,744)	0	1,070	0	0	
77.5	**215**	58.5	(188,472)	(40,431,734)	0	2,636	(4.4)	73.1	(145,312)	(31,172,989)	0	1,681	0	0	
72.5	**358**	59.6	(127,552)	(45,690,865)	0	2,979	(1.5)	71.0	(113,165)	(40,537,412)	0	2,186	0	0	
67.5	**313**	60.8	(66,632)	(20,867,961)	0	1,361	1.5	67.5	(66,632)	(20,867,961)	0	1,125	0	0	
62.5	**459**	61.9	(5,711)	(2,623,786)	0	171	4.4	62.5	(5,711)	(2,623,786)	0	141	0	0	
57.5	**344**	63.1	55,209	18,994,516	217	0	7.3	63.1	0	0	0	0	0	0	
52.5	**412**	64.2	116,129	47,827,266	546	0	10.2	62.7	15,424	6,352,167	73	0	0	0	
47.5	**332**	65.4	177,049	58,763,561	671	0	13.1	60.6	47,571	15,789,011	180	0	0	0	
42.5	**260**	66.5	237,970	61,886,290	707	0	16.0	58.5	79,718	20,731,462	237	0	0	0	
37.5	**349**	67.7	298,890	104,344,619	1,192	0	18.9	56.4	111,865	39,053,001	446	0	0	0	
32.5	**382**	68.8	359,810	137,445,356	1,570	0	21.8	54.3	144,013	55,011,958	628	0	0	0	
27.5	**304**	70.0	420,730	127,934,613	1,461	0	24.7	52.2	176,160	53,566,223	612	0	0	0	
22.5	**173**	70.0	470,228	81,366,264	929	0	27.6	50.1	196,885	34,068,055	389	0	0	0	
17.5	**226**	70.0	519,726	117,278,613	1,340	0	30.5	48.0	217,609	49,104,555	561	0	0	0	
12.5	**111**	70.0	569,224	63,072,002	720	0	33.4	45.9	238,334	26,408,247	302	0	0	0	
7.5	**46**	70.0	618,721	28,173,914	322	0	36.3	43.8	259,059	11,796,418	135	0	0	0	
2.5	**7**	70.0	668,219	4,395,131	50	0	39.2	41.7	279,783	1,840,241	21	0	0	0	
(2.5)	**11**	70.0	717,717	7,625,739	87	0	42.1	39.6	300,508	3,192,897	36	0	0	0	
(7.5)	**3**	70.0	767,214	1,940,870	22	0	45.1	37.6	321,233	812,642	9	0	0	0	
0.0	**0**	70.0	692,968	0	0	0	40.7	40.7	290,146	0	0	0	0	0	
0.0	**0**	70.0	692,968	0	0	0	40.7	40.7	290,146	0	0	0	0	0	
0.0	**0**	70.0	692,968	0	0	0	40.7	40.7	290,146	0	0	0	0	0	
	4,432	Total Hours			9,835	9,338					3,629	6,408	0		

©2013 Energy Systems Group, LLC

ECM TREC-7A
REPLACE AHU 3 (CONTINUED)

FIM #6 (continued)

Client: TREC
Address: Erie,PA

INPUT DATA:

Exhaust Operating Hours: **168** hours per week during the Heating Season
% of time operating: 100%

AHU Discharge Air Temperature: **70** °F

Proposed Heat Recovery Efficiency: **58%**
Additional Fan Static Pressure: **0.00** inches w.c.
Fan Efficiency: **60%**

Heating Fuel: **Natural Gas**
Heat Content: **103,000** Btu per ccf
Boiler Efficiency: **85.0%**

Additonal Electrical Power Requir
Fans
Supply air: 0.00 HP
Exhaust air: 0.00 HP

Pump Data
28 GPM
45 ft. head
55% Pump eff.
0.57 BHP
90.0% Motor Eff.
0.47 kW

	Outdoor Air	Exhaust Air	
	CFM	CFM	Temp
Air Flows:(50% of Design)	**5,893**	**5,183**	
Air Flows (50% of Measured):	**4,562**	**4,692**	**70**
Motor Efficiency:	**93.6%**	**93.0%**	
	25HP	15HP	

Persent Cooling Energy Use: **0.78** kw per ton
Proposed Cooling Energy Use: **0.647** kw per ton

Heat recovery system is not used if outdoor air temperature
a) is within **2** degrees of discharge air setpoint or
b) is above **100** degrees

Bin Data for

Bin Data		Req'd	Make-up Air Unit Operating Costs - Present				Heat Recovery Unit		Future Operating Costs - w/ Heat Recovery Unit				Add'l. Energy		
			Energy Required		Heating	Cooling	Potential	Actual			Heating	Cooling	Fan	Pump	
Temp.	Hours	SAT+ Reheat	Btuh	Btu/yr	ccf	kwh	ΔT	LAT	Btuh	Btu/yr	ccf	kwh	kwh	kwh	
92.5	**6**	55.0	(185,616)	(1,100,440)	0	72	(13.1)	79.4	(120,877)	(716,628)	0	39	0	0	
87.5	**11**	56.2	(155,156)	(1,686,401)	0	110	(10.2)	77.3	(104,803)	(1,139,114)	0	61	0	0	
82.5	**109**	57.3	(124,696)	(13,614,887)	0	888	(7.3)	75.2	(88,730)	(9,687,928)	0	522	0	0	
77.5	**209**	58.5	(94,236)	(19,740,199)	0	1,287	(4.4)	73.1	(72,656)	(15,219,754)	0	821	0	0	
72.5	**350**	59.6	(63,776)	(22,307,893)	0	1,455	(1.5)	71.0	(56,583)	(19,791,795)	0	1,067	0	0	
67.5	**306**	60.8	(33,316)	(10,188,475)	0	664	1.5	67.5	(33,316)	(10,188,475)	0	549	0	0	
62.5	**449**	61.9	(2,856)	(1,281,025)	0	84	4.4	62.5	(2,856)	(1,281,025)	0	69	0	0	
57.5	**336**	63.1	27,604	9,273,793	106	0	7.3	63.1	0	0	0	0	0	0	
52.5	**402**	64.2	58,065	23,350,959	267	0	10.2	62.7	7,712	3,101,352	35	0	0	0	
47.5	**324**	65.4	88,525	28,690,444	328	0	13.1	60.6	23,785	7,708,752	88	0	0	0	
42.5	**254**	66.5	118,985	30,215,071	345	0	16.0	58.5	39,859	10,121,831	116	0	0	0	
37.5	**341**	67.7	149,445	50,944,726	582	0	18.9	56.4	55,933	19,067,053	218	0	0	0	
32.5	**373**	68.8	179,905	67,105,674	766	0	21.8	54.3	72,006	26,858,780	307	0	0	0	
27.5	**297**	70.0	210,365	62,462,194	713	0	24.7	52.2	88,080	26,152,920	299	0	0	0	
22.5	**169**	70.0	235,114	39,725,882	454	0	27.6	50.1	98,442	16,633,227	190	0	0	0	
17.5	**220**	70.0	259,863	57,259,558	654	0	30.5	48.0	108,805	23,974,577	274	0	0	0	
12.5	**108**	70.0	284,612	30,793,978	352	0	33.4	45.9	119,167	12,893,438	147	0	0	0	
7.5	**44**	70.0	309,361	13,755,499	157	0	36.3	43.8	129,529	5,759,428	66	0	0	0	
2.5	**6**	70.0	334,109	2,145,858	25	0	39.2	41.7	139,892	898,471	10	0	0	0	
(2.5)	**10**	70.0	358,858	3,723,155	43	0	42.1	39.6	150,254	1,558,885	18	0	0	0	
(7.5)	**2**	70.0	383,607	947,601	11	0	45.1	37.6	160,616	396,761	5	0	0	0	
0.0	**0**	70.0	346,484	0	0	0	40.7	40.7	145,073	0	0	0	0	0	
0.0	**0**	70.0	346,484	0	0	0	40.7	40.7	145,073	0	0	0	0	0	
0.0	**0**	70.0	346,484	0	0	0	40.7	40.7	145,073	0	0	0	0	0	
	4,328	Total Hours			4,802	4,559					1,772	3,128	0		

ECM TREC-8
OCCUPIED/UNOCCUPIED TEMPTERATURE CONTROL

EMS - IMPROVE TEMPERATURE CONTROL
FIM #8a

Return to Savings tab **Go to BLC tab**

CALCULATIONS FOR EMS - IMPROVE TEMPERATURE CONTROL
FIM #8a

Client: TREC
Address: Erie,PA

Type: **Natural Gas**
Units: **ccf**

Cooling EER: **12.0**

Heat Content of Fuel: **103,000** Btu/ccf
Combustion Efficiency: **85.0%**

DATA:

Percentage of Building to be Setback: **50%**

	Current		Proposed		
	Occupied	Unoccupied	Occupied	Unoccupied	
Heating T Setpoint:	**70**	**70**	**70**	**60**	deg. F.
Cooling T Setpoint:	**72**	**72**	**72**	**80**	deg. F.
Q internal gains:	**317,498**	**111,955**	317,498	111,955	Btuh
BLC:	**5,770**	**6,411**	5,770	6,411	Btuh/deg. F.
Heating T Balance:	15.0	52.5	15.0	42.5	deg. F.
Cooling T Balance:	17.0	54.5	17.0	62.5	

T Balance = T Setpoint - (Q internal gains / BLC)

Existing Setpoints: Occupied period = 85 hours/week

	Heating 70 Day / 70 Night		Cooling 72 Day / 72 Night	
	Accum Hours	Avg. OA Temp. below T. Bal.	Accum Hours	Avg. OA Temp. above Balance T.
Occupied	**134**	**10.0**	**1,858**	**69.9**
Unoccupied	**2,697**	**34.5**	**1,347**	**64.9**

Proposed Setpoints: Occupied period = **85** hours/week

	Heating 70 Day / 60 Night		Cooling 72 Day / 80 Night	
	Accum Hours	Avg. OA Temp. below T. Bal.	Accum Hours	Avg. OA Temp. above Balance T.
Occupied	**134**	**10.0**	**1,858**	**69.9**
Unoccupied Weekends	**1,969**	**28.8**	**603**	**70.4**

CALCULATIONS:

BIN Data: Buffalo, NY, Sep 1 - May 31, Adjusted for 85 occ. Hours/week

Heat Loss = BLC x Accum Hours x (T Balance - T Avg O.A. below T Balance)

Energy Cost = (Heat Loss / Conversion Factor) x (Unit cost / Efficiency)

Winter	Heat Loss (Btu/year)	Fuel Used (ccf/year)	Heat Gains (Btu/year)	Cooling (kwh/year)
Occupied Energy:	3,836,000	44	(567,444,000)	47,287
Unoccupied Energy:	311,971,000	3,563	(89,235,000)	7,436
Present Annual Energy:	**315,807,000**	**3,607**	**(656,679,000)**	54,723

Winter	Heat Loss (Btu/year)	Fuel Used (ccf/year)	Heat Gains (Btu/year)	Electricity (kwh/year)
Occupied Energy:	3,836,000	44	(567,444,000)	47,287
Unoccupied Energy:	173,826,000	1,985	(30,265,000)	2,522
Proposed Annual Energy:	**177,662,000**	**2,029**	**(597,709,000)**	49,809
Annual Savings:	**138,145,000**	**1,578**	**(58,970,000)**	**4,914**

©2013 Energy Systems Group, LLC

ECM TREC-8
OCCUPIED/UNOCCUPIED TEMPTERATURE CONTROL (CONTINUED)

CALCULATIONS FOR EMS - OPTIMAL START
FIM #8b

TREC
Erie,PA

Fuel Information

	Heating
Type:	**Natural Gas**
Units:	**ccf**
Unit cost:	**$ 0.431**
Heat Content of Fuel	**103,000**
Heating Efficiency	**85%**

Building Balance Temperature	**53**	°F.
Current operating schedule begins	**75**	minutes before occupancy
	5	days per week
	6.25	hours per week
	3.7%	of unoccupied bin hours
On a design day optimal start requires	**75**	minutes before occupancy

Heating Schedules 0 hours per week
NEW YORK J F KENNEDY INT'L AR, NY All Hours, Sep 25-May 15

Fan HP impacted by Optimal Start:

	HVAC	Exhaust	
HVAC-1	120		
HVAC-2	40		
	160	**0**	HP
Motor	**80%**	**80%**	Loading
	90%	**70%**	Efficiency
	106.10	0.00	kW
Present Warmup	On	On	
Proposed Warmup	On	Off	

Ventilation CFM impacted by Optimal Start	**0**	cfm OA
Envelope Loads impacted by Optimal Start	11,541	btu/hr./°F.
Occupied Setpoint	**70**	°F.
Unoccupied Setpoint	**60**	°F.

All Bin	Occ. Hours	Unocc. Hours	Hours of warm-up Present	Proposed		Ventilation MBH	Ventilation Mbtu Present	Proposed
(12.5)	0.0	0.0	0.0	100%	0.0	0	0.0	0.0
(7.5)	0.0	0.0	0.0	93%	0.0	0	0.0	0.0
(2.5)	0.0	0.0	0.0	87%	0.0	0	0.0	0.0
2.5	0.0	0.0	0.0	80%	0.0	0	0.0	0.0
7.5	9.0	0.0	0.0	73%	0.0	0	0.0	0.0
12.5	21.0	2.0	0.1	67%	0.0	0	0.0	0.0
17.5	112.0	20.0	0.7	60%	0.4	0	0.0	0.0
22.5	223.0	55.0	2.0	53%	1.1	0	0.0	0.0
27.5	266.0	63.0	2.3	47%	1.1	0	0.0	0.0
32.5	526.0	136.0	5.1	40%	2.0	0	0.0	0.0
37.5	1,045.0	320.0	11.9	33%	4.0	0	0.0	0.0
42.5	930.0	299.0	11.1	27%	3.0	0	0.0	0.0
47.5	537.0	199.0	7.4	20%	1.5	0	0.0	0.0
52.5	648.0	169.0	6.3	13%	0.8	0	0.0	0.0
57.5	585.0	206.0	7.7	7%	0.5	0	0.0	0.0
62.5	392.0	161.0	6.0	0%	0.0	0	0.0	0.0
67.5	187.0	104.0	3.9	0%	0.0	0	0.0	0.0
72.5	70.0	54.0	2.0	0%	0.0	0	0.0	0.0
77.5	16.0	15.0	0.6	0%	0.0	0	0.0	0.0
82.5	1.0	1.0	0.0	0%	0.0	0	0.0	0.0
87.5	0.0	0.0	0.0	0%	0.0	0	0.0	0.0
92.5	0.0	0.0	0.0	0%	0.0	0	0.0	0.0
97.5	0.0	0.0	0.0	0%	0.0	0	0.0	0.0
	5,568	1,804	67		14		0.0	0.0

Envelope Mbtu Present	Proposed	Motor kWh Present	Proposed
0.0	0.0	0	0
0.0	0.0	0	0
0.0	0.0	0	0
0.0	0.0	0	0
0.0	0.0	0	0
0.0	0.0	8	5
0.5	0.4	79	47
1.1	1.0	217	116
1.1	1.0	249	116
2.2	1.8	537	215
4.5	3.5	1,263	421
3.5	2.6	1,180	315
1.9	1.2	785	157
1.3	0.6	667	89
1.1	0.3	813	54
0.5	(0.2)	635	0
0.1	(0.3)	410	0
(0.1)	(0.3)	213	0
(0.0)	(0.1)	59	0
(0.0)	(0.0)	4	0
0.0	0.0	0	0
0.0	0.0	0	0
0.0	0.0	0	0
18	12	7,121	1,535

©2013 Energy Systems Group, LLC

ECM TREC-8
OCCUPIED/UNOCCUPIED TEMPTERATURE CONTROL (CONTINUED)

CALCULATIONS FOR EMS - Add Calendar Functionality

FIM #8c

TREC
Erie,PA

Fuel Information

	Heating		Type: **Electricity**
Type:	**Natural Gas**		
Units:	**ccf**		
Unit cost:	**$ 0.431**		
Heat Content of Fuel	**103,000**		
Heating Efficiency	**85%**		
Cooling EER	**13.0**	0.92	kW/ton

Fan HP impacted by Calendar Function:

	HVAC	Exhaust	
	3	**1**	HP
Motor	**80%**	**80%**	Loading
	82%	**70%**	Efficiency
	2.18	0.75	kW

Ventilation CFM impacted by Calendar: **0** cfm OA
Envelope Loads impacted by Calendar: 11,541 btu/hr./°F.

	Occ.	Unocc.	
Cooling Setpoints	**72**	**80**	°F.
Heating Setpoints	**70**	**60**	°F.
Heating required below	**55**	**60**	°F. OAT

Present Heating Schedule
51.25 hours per week
NEW YORK J F KENNEDY INT'L AR, NY 8am-5pm M-F, Jan. 1-Dec.31

Proposed Heating Schedule with Calendar Functionality
51.25 hours per week
NEW YORK J F KENNEDY INT'L AR, NY 8am-5pm M-F w/ Holidays, Jan. 1-Dec.31

Present Heating Schedule			Proposed Heating Schedule											
All	Occ.	Unocc.	Occ.	Unocc.	Ventilation	Ventilation Mbtu		Envelope Mbtu		Cooling kWh		Motor kWh	
Bin	Hours	Hours	Hours	Hours	MBH	Present	Proposed	Present	Proposed	Present	Proposed	Present	Proposed
(12.5)	0	0	0	0	0	0.0	0.0	0.0	0.0	0	0	0	0
(7.5)	0	0	0	0	0	0.0	0.0	0.0	0.0	0	0	0	0
(2.5)	0	0	0	0	0	0.0	0.0	0.0	0.0	0	0	0	0
2.5	0	0	0	0	0	0.0	0.0	0.0	0.0	0	0	0	0
7.5	0	9	0	9	0	0.0	0.0	5.5	5.5	0	0	0	0
12.5	2	19	2	19	0	0.0	0.0	11.7	11.7	0	0	6	6
17.5	20	92	20	92	0	0.0	0.0	57.2	57.2	0	0	59	59
22.5	55	168	53	170	0	0.0	0.0	102.9	102.6	0	0	161	155
27.5	63	203	59	207	0	0.0	0.0	107.0	106.6	0	0	185	173
32.5	136	390	117	409	0	0.0	0.0	182.6	180.4	0	0	398	343
37.5	320	725	240	805	0	0.0	0.0	308.3	299.0	0	0	937	703
42.5	299	633	285	647	0	0.0	0.0	222.7	221.1	0	0	876	835
47.5	199	346	173	372	0	0.0	0.0	101.6	98.6	0	0	583	507
52.5	169	512	156	525	0	0.0	0.0	78.4	76.9	0	0	495	457
57.5	216	514	207	523	0	0.0	0.0	14.8	15.1	0	0	633	606
62.5	245	550	232	563	0	0.0	0.0	0.0	0.0	0	0	718	680
67.5	220	545	206	559	0	0.0	0.0	0.0	0.0	0	0	644	603
72.5	254	527	243	538	0	0.0	0.0	(1.5)	(1.4)	113	108	744	712
77.5	285	447	258	474	0	0.0	0.0	(18.1)	(16.4)	1,392	1,260	835	756
82.5	272	183	262	193	0	0.0	0.0	(38.2)	(37.3)	2,942	2,870	797	768
87.5	80	38	80	38	0	0.0	0.0	(17.6)	(17.6)	1,354	1,354	234	234
92.5	14	7	14	7	0	0.0	0.0	(4.3)	(4.3)	332	332	41	41
97.5	0	3	0	3	0	0.0	0.0	(0.6)	(0.6)	47	47	0	0
	2,849	5,911	2,607	6,153	Heating:	0.0	0.0	1,192.8	1,174.9	6,179	5,971	8,346	7,637
	8,760	hours	8,760	hours	Cooling:	0.0	0.0	(80.3)	(77.6)				

©2013 Energy Systems Group, LLC

ECM TREC-10
INSTALL VFDS ON HOT WATER PUMPS

CALCULATIONS FOR VARIABLE SPEED DRIVE ON HOT WATER PUMPS
FIM #10

Client: TREC
Address: Erie,PA

Pump Type: **Hot Water**

Design Conditions:
280 GPMdes
70 ft Total Head (TH)
- 15 ft head minimum (Fixed Minimum Head)
55 pipe losses (Variable Head)

	Existing	Proposed	
Motor Efficiency:	**85.5%**	**85.5%**	
Minimum Flow:	**280**	**112** GPM	= 40% of GPMdes.
Motor HP:	**10**		
VSD Efficiency:		**97%**	
Pump Efficiency:		**75.0%**	6.6 BHP des
OA Lockout Temp:		**55** °F	

Bin Data Based on: **Sep 1 - May 31**
Periods: **Occupied** **Unocc.**
Flow Increment: **5%** **5%**
Unocc. flow is = **80%** of Occupied flow at design.

Forumulae:
FMH = Fixed Minimum Head
H2 = FMH + ((TH - FMH) x ((GPM2/GPMdes)^2))
BHP = (GPM2x H2) / (3960 x pump efficiency)
kW = BHP x 0.746 kW / Motor Eff / VFD Eff

Bin	Occupied	Percent	Occupied		New	% Speed	Occupied kW		Occupied kWh	
Temp	Hours	Flow	GPM2	Head H2	BHP	Occupied	Present	Proposed	Present	Proposed
-	**-**	**100%**	**280**	70.0	6.6	**100%**	0.0	5.9	-	-
-	**-**	**100%**	**280**	70.0	6.6	**100%**	0.0	5.9	-	-
(7.5)	**-**	**100%**	**280**	70.0	6.6	**100%**	0.0	5.9	-	-
(2.5)	**2.4**	**95%**	**266**	64.6	5.8	**96%**	5.8	5.2	14	13
2.5	**4.9**	**90%**	**253**	59.8	5.1	**92%**	5.8	4.6	28	22
7.5	**49.8**	**86%**	**240**	55.4	4.5	**89%**	5.8	4.0	287	201
12.5	**76.5**	**81%**	**228**	51.5	4.0	**86%**	5.8	3.6	441	272
17.5	**184.6**	**77%**	**217**	47.9	3.5	**83%**	5.8	3.1	1,064	580
22.5	**182.1**	**74%**	**206**	44.7	3.1	**80%**	5.8	2.8	1,050	508
27.5	**292.6**	**70%**	**196**	41.8	2.8	**77%**	5.8	2.5	1,687	725
32.5	**380.1**	**66%**	**186**	39.2	2.5	**75%**	5.8	2.2	2,191	838
37.5	**323.0**	**63%**	**176**	36.8	2.2	**73%**	5.8	2.0	1,862	636
42.5	**230.7**	**60%**	**168**	34.7	2.0	**70%**	5.8	1.8	1,330	407
47.5	**270.8**	**57%**	**159**	32.8	1.8	**68%**	5.8	1.6	1,561	428
52.5	**349.7**	**54%**	**151**	31.1	1.6	**67%**	5.8	1.4	2,016	498
57.5	**252.6**	**0%**	**-**	15.0	-	**0%**	5.8	0.0	-	-
62.5	**297.5**	**0%**	**-**	15.0	-	**0%**	5.8	0.0	-	-
67.5	**156.6**	**0%**	**-**	15.0	-	**0%**	5.8	0.0	-	-
	3,315	Occupied						Occupied kwh/year	13,530	5,128

Bin	Unocc.	Percent	Unocc.		New	% Speed	Unocc. kW		Unocc. kWh	
Temp	Hours	Flow	GPM2	Head H2	BHP	Unocc.	Present	Proposed	Present	Proposed
-	**-**	**80%**	**224**	50.2	3.8	**85%**	0.0	3.4	-	-
-	**-**	**80%**	**224**	50.2	3.8	**85%**	0.0	3.4	-	-
(7.5)	**5.0**	**80%**	**224**	50.2	3.8	**85%**	5.8	3.4	29	17
(2.5)	**18.6**	**76%**	**213**	46.8	3.4	**82%**	5.8	3.0	107	56
2.5	**8.1**	**72%**	**202**	43.7	3.0	**79%**	5.8	2.7	47	22
7.5	**40.2**	**69%**	**192**	40.9	2.6	**76%**	5.8	2.4	232	96
12.5	**142.5**	**65%**	**182**	38.4	2.4	**74%**	5.8	2.1	821	302
17.5	**261.4**	**62%**	**173**	36.1	2.1	**72%**	5.8	1.9	1,507	495
22.5	**159.9**	**59%**	**165**	34.0	1.9	**70%**	5.8	1.7	921	271
27.5	**308.4**	**56%**	**156**	32.2	1.7	**68%**	5.8	1.5	1,777	470
32.5	**374.9**	**53%**	**149**	30.5	1.5	**66%**	5.8	1.4	2,161	515
37.5	**367.0**	**50%**	**141**	29.0	1.4	**64%**	5.8	1.2	2,115	455
42.5	**283.3**	**48%**	**134**	27.6	1.2	**63%**	5.8	1.1	1,633	318
47.5	**365.2**	**46%**	**127**	26.4	1.1	**61%**	5.8	1.0	2,105	372
52.5	**362.3**	**43%**	**121**	25.3	1.0	**60%**	5.8	0.9	2,088	336
57.5	**240.4**	**0%**	**-**	15.0	-	**0%**	5.8	0.0	-	-
62.5	**194.5**	**0%**	**-**	15.0	-	**0%**	5.8	0.0	-	-
67.5	**75.4**	**0%**	**-**	15.0	-	**0%**	5.8	0.0	-	-
	3,237	Unocc.						Unocc. kwh/year	15,545	3,723
	6,552	bin hours/year total						Total kWh / year	29,075	8,851

©2013 Energy Systems Group, LLC

ECM PISP-3
PRESQUE ISLE MAINTENANCE BOILER REPLACEMENT

Site	PA DCNR
Park	Presque Isle
ECM	Maint Boiler Replacement

Savings Summary

	Existing Baseline Consumption	New Equipment w/Setback Consumption	New Equipment w/Setback Savings
Cooling kWh	0	0	0
Heating (BTU)	294,621,728.3	264,294,791	30,326,938

©2013 Energy Systems Group, LLC

ECM PISP-3
PRESQUE ISLE MAINTENANCE BOILER REPLACEMENT (CONT)

	Existing - Before Upgrade and Setback				
Cooling	SEER	15.00	HC	CBTUH	0
Heating	Efficiency	0.85	HH	HBTUH	95,400

Proposed - After Upgrade and Setback			
SEER	15.00	CBTUH	0
Efficiency	0.90	HBTUH	95,400

			Existing- Prior to Upgrade and Setback Savings											
OAT - DB Avg Temp F	Total Occupied Hours in Bin	Total Unoccupied Hours in Bin	Occupied Heating Load %	Unoccupied Heating Load %	Occupied Cooling Load %	Unoccupied Cooling Load %	Occupied Heating Load BTUH	Unoccupied Heating Load BTUH	Occupied Cooling Load BTUH	Unoccupied Cooling Load BTUH	Occupied Heating BTU	Unoccupied Heating BTU	Occupied Cooling kWh	Unoccupied Cooling kWh
-15	0	0	100%	100%	0%	0%	95,400.0	95,400.0	0.0	0.0	0	0	0	0
-10	0	0	100%	100%	0%	0%	95,400.0	95,400.0	0.0	0.0	0	0	0	0
-5	0	0	100%	100%	0%	0%	95,400.0	95,400.0	0.0	0.0	0	0	0	0
0	0	0	100%	100%	0%	0%	95,400.0	95,400.0	0.0	0.0	0	0	0	0
5	16	0	100%	100%	0%	0%	95,400.0	95,400.0	0.0	0.0	1,795,765	0	0	0
10	145	0	91%	91%	0%	0%	86,727.3	86,727.3	0.0	0.0	14,794,652	0	0	0
15	424	0	82%	82%	0%	0%	78,054.5	78,054.5	0.0	0.0	38,935,444	0	0	0
20	450	0	73%	73%	0%	0%	69,381.8	69,381.8	0.0	0.0	36,731,551	0	0	0
25	444	0	64%	64%	0%	0%	60,709.1	60,709.1	0.0	0.0	31,711,572	0	0	0
30	798	0	55%	55%	0%	0%	52,036.4	52,036.4	0.0	0.0	48,852,963	0	0	0
35	928	0	45%	45%	0%	0%	43,363.6	43,363.6	0.0	0.0	47,342,888	0	0	0
40	715	0	36%	36%	0%	0%	34,690.9	34,690.9	0.0	0.0	29,181,176	0	0	0
45	517	0	27%	27%	0%	0%	26,018.2	26,018.2	0.0	0.0	15,825,176	0	0	0
50	626	0	20%	20%	0%	0%	19,080.0	19,080.0	0.0	0.0	14,051,859	0	0	0
55	686	0	20%	20%	0%	0%	19,080.0	19,080.0	0.0	0.0	15,398,682	0	0	0
60	887	0	0%	0%	20%	20%	0.0	0.0	0.0	0.0	0	0	0	0
65	765	0	0%	0%	20%	20%	0.0	0.0	0.0	0.0	0	0	0	0
70	633	0	0%	0%	33%	33%	0.0	0.0	0.0	0.0	0	0	0	0
75	493	0	0%	0%	50%	50%	0.0	0.0	0.0	0.0	0	0	0	0
80	198	0	0%	0%	67%	67%	0.0	0.0	0.0	0.0	0	0	0	0
85	32	0	0%	0%	83%	83%	0.0	0.0	0.0	0.0	0	0	0	0
90	3	0	0%	0%	100%	100%	0.0	0.0	0.0	0.0	0	0	0	0
95	0	0	0%	0%	100%	100%	0.0	0.0	0.0	0.0	0	0	0	0
100	0	0	0%	0%	100%	100%	0.0	0.0	0.0	0.0	0	0	0	0
	8,760	0									294,621,728	0	0	0

©2013 Energy Systems Group, LLC

ECM PISP-3
PRESQUE ISLE MAINTENANCE BOILER REPLACEMENT (CONT)

			Proposed - After Upgrade and Setback Savings											
OAT - DB Avg Temp F	Total Occupied Hours in Bin	Total Unoccupied Hours in Bin	Occupied Heating Load %	Unoccupied Heating Load %	Occupied Cooling Load %	Unoccupied Cooling Load %	Occupied Heating Load BTUH	Unoccupied Heating Load BTUH	Occupied Cooling Load BTUH	Unoccupied Cooling Load BTUH	Occupied Heating BTU	Unoccupied Heating BTU	Occupied Cooling kWh	Unoccupied Cooling kWh
-15	0	0	100%	100%	0%	0%	95,400.0	95,400.0	0.0	0.0	0	0	0	0
-10	0	0	100%	100%	0%	0%	95,400.0	95,400.0	0.0	0.0	0	0	0	0
-5	0	0	100%	100%	0%	0%	95,400.0	95,400.0	0.0	0.0	0	0	0	0
0	0	0	100%	98%	0%	0%	95,400.0	93,199.5	0.0	0.0	0	0	0	0
5	8	8	100%	90%	0%	0%	95,400.0	85,432.8	0.0	0.0	848,000	759,403	0	0
10	71	74	91%	81%	0%	0%	86,727.3	77,666.2	0.0	0.0	6,841,818	6,385,889	0	0
15	219	205	82%	73%	0%	0%	78,054.5	69,899.6	0.0	0.0	18,993,273	15,921,574	0	0
20	247	203	73%	65%	0%	0%	69,381.8	62,133.0	0.0	0.0	19,041,455	14,014,437	0	0
25	230	214	64%	57%	0%	0%	60,709.1	54,366.4	0.0	0.0	15,514,545	12,927,110	0	0
30	399	399	55%	49%	0%	0%	52,036.4	46,599.7	0.0	0.0	23,069,455	20,659,213	0	0
35	483	445	45%	41%	0%	0%	43,363.6	38,833.1	0.0	0.0	23,271,818	19,200,814	0	0
40	395	320	36%	33%	0%	0%	34,690.9	31,066.5	0.0	0.0	15,225,455	11,045,862	0	0
45	270	247	27%	24%	0%	0%	26,018.2	23,299.9	0.0	0.0	7,805,455	6,394,518	0	0
50	308	318	20%	18%	0%	0%	19,080.0	17,086.6	0.0	0.0	6,529,600	6,037,254	0	0
55	354	332	20%	18%	0%	0%	19,080.0	17,086.6	0.0	0.0	7,504,800	6,303,045	0	0
60	442	445	0%	0%	20%	20%	0.0	0.0	0.0	0.0	0	0	0	0
65	413	352	0%	0%	20%	20%	0.0	0.0	0.0	0.0	0	0	0	0
70	347	286	0%	0%	33%	33%	0.0	0.0	0.0	0.0	0	0	0	0
75	355	138	0%	0%	50%	50%	0.0	0.0	0.0	0.0	0	0	0	0
80	173	25	0%	0%	67%	67%	0.0	0.0	0.0	0.0	0	0	0	0
85	28	4	0%	0%	83%	83%	0.0	0.0	0.0	0.0	0	0	0	0
90	3	0	0%	0%	100%	100%	0.0	0.0	0.0	0.0	0	0	0	0
95	0	0	0%	0%	100%	100%	0.0	0.0	0.0	0.0	0	0	0	0
100	0	0	0%	0%	100%	100%	0.0	0.0	0.0	0.0	0	0	0	0
	4,745	**4,015**									**144,645,673**	**119,649,118**	**0**	**0**

©2013 Energy Systems Group, LLC

ECM FFD-2
FORBES FOREST DISTRICT-PONDFIELD BOILER REPLACEMENT

Site	PA DCNR
Park	Forbes Forest District
ECM	Pondfield Boiler Replacement

Savings Summary

	Existing Baseline Consumption	New Equipment w/Setback Consumption	New Equipment w/Setback Savings
Cooling kWh	0	0	0
Heating (BTU)	120,032,239.6	113,363,782	6,668,458

©2013 Energy Systems Group, LLC

©2013 Energy Systems Group, LLC

ECM FFD-2
FORBES FOREST DISTRICT-PONDFIELD BOILER REPLACEMENT (CONT)

	Existing - Before Upgrade and Setback				
Cooling	SEER	15.00	HC	CBTUH	0
Heating	Efficiency	0.85	HH	HBTUH	46,800

Proposed - After Upgrade and Setback			
SEER	15.00	CBTUH	0
Efficiency	0.90	HBTUH	46,800

			Existing- Prior to Upgrade and Setback Savings											
OAT - DB Avg Temp F	Total Occupied Hours in Bin	Total Unoccupied Hours in Bin	Occupied Heating Load %	Unoccupied Heating Load %	Occupied Cooling Load %	Unoccupied Cooling Load %	Occupied Heating Load BTUH	Unoccupied Heating Load BTUH	Occupied Cooling Load BTUH	Unoccupied Cooling Load BTUH	Occupied Heating BTU	Unoccupied Heating BTU	Occupied Cooling kWh	Unoccupied Cooling kWh
-15	0	0	100%	100%	0%	0%	46,800.0	46,800.0	0.0	0.0	0	0	0	0
-10	0	0	100%	100%	0%	0%	46,800.0	46,800.0	0.0	0.0	0	0	0	0
-5	0	0	100%	100%	0%	0%	46,800.0	46,800.0	0.0	0.0	0	0	0	0
0	7	0	100%	100%	0%	0%	46,800.0	46,800.0	0.0	0.0	385,412	0	0	0
5	25	0	100%	100%	0%	0%	46,800.0	46,800.0	0.0	0.0	1,376,471	0	0	0
10	50	0	91%	91%	0%	0%	42,545.5	42,545.5	0.0	0.0	2,502,674	0	0	0
15	129	0	82%	82%	0%	0%	38,290.9	38,290.9	0.0	0.0	5,811,209	0	0	0
20	337	0	73%	73%	0%	0%	34,036.4	34,036.4	0.0	0.0	13,494,417	0	0	0
25	382	0	64%	64%	0%	0%	29,781.8	29,781.8	0.0	0.0	13,384,299	0	0	0
30	744	0	55%	55%	0%	0%	25,527.3	25,527.3	0.0	0.0	22,343,872	0	0	0
35	795	0	45%	45%	0%	0%	21,272.7	21,272.7	0.0	0.0	19,896,257	0	0	0
40	677	0	36%	36%	0%	0%	17,018.2	17,018.2	0.0	0.0	13,554,481	0	0	0
45	582	0	27%	27%	0%	0%	12,763.6	12,763.6	0.0	0.0	8,739,337	0	0	0
50	816	0	20%	20%	0%	0%	9,360.0	9,360.0	0.0	0.0	8,985,600	0	0	0
55	868	0	20%	20%	0%	0%	9,360.0	9,360.0	0.0	0.0	9,558,212	0	0	0
60	973	0	0%	0%	20%	20%	0.0	0.0	0.0	0.0	0	0	0	0
65	1,025	0	0%	0%	20%	20%	0.0	0.0	0.0	0.0	0	0	0	0
70	620	0	0%	0%	33%	33%	0.0	0.0	0.0	0.0	0	0	0	0
75	460	0	0%	0%	50%	50%	0.0	0.0	0.0	0.0	0	0	0	0
80	246	0	0%	0%	67%	67%	0.0	0.0	0.0	0.0	0	0	0	0
85	22	0	0%	0%	83%	83%	0.0	0.0	0.0	0.0	0	0	0	0
90	2	0	0%	0%	100%	100%	0.0	0.0	0.0	0.0	0	0	0	0
95	0	0	0%	0%	100%	100%	0.0	0.0	0.0	0.0	0	0	0	0
100	0	0	0%	0%	100%	100%	0.0	0.0	0.0	0.0	0	0	0	0
	8,760	0									120,032,240	0	0	0

ECM FFD-2
FORBES FOREST DISTRICT-PONDFIELD BOILER REPLACEMENT (CONT)

			Proposed - After Upgrade and Setback Savings											
OAT - DB Avg Temp F	Total Occupied Hours in Bin	Total Unoccupied Hours in Bin	Occupied Heating Load %	Unoccupied Heating Load %	Occupied Cooling Load %	Unoccupied Cooling Load %	Occupied Heating Load BTUH	Unoccupied Heating Load BTUH	Occupied Cooling Load BTUH	Unoccupied Cooling Load BTUH	Occupied Heating BTU	Unoccupied Heating BTU	Occupied Cooling kWh	Unoccupied Cooling kWh
-15	0	0	100%	100%	0%	0%	46,800.0	46,800.0	0.0	0.0	0	0	0	0
-10	0	0	100%	100%	0%	0%	46,800.0	46,800.0	0.0	0.0	0	0	0	0
-5	0	0	100%	100%	0%	0%	46,800.0	46,800.0	0.0	0.0	0	0	0	0
0	0	7	100%	100%	0%	0%	46,800.0	46,800.0	0.0	0.0	0	364,000	0	0
5	0	25	100%	100%	0%	0%	46,800.0	46,800.0	0.0	0.0	0	1,300,000	0	0
10	0	50	91%	91%	0%	0%	42,545.5	42,545.5	0.0	0.0	0	2,363,636	0	0
15	0	129	82%	82%	0%	0%	38,290.9	38,290.9	0.0	0.0	0	5,488,364	0	0
20	0	337	73%	73%	0%	0%	34,036.4	34,036.4	0.0	0.0	0	12,744,727	0	0
25	0	382	64%	64%	0%	0%	29,781.8	29,781.8	0.0	0.0	0	12,640,727	0	0
30	0	744	55%	55%	0%	0%	25,527.3	25,527.3	0.0	0.0	0	21,102,545	0	0
35	0	795	45%	45%	0%	0%	21,272.7	21,272.7	0.0	0.0	0	18,790,909	0	0
40	0	677	36%	36%	0%	0%	17,018.2	17,018.2	0.0	0.0	0	12,801,455	0	0
45	0	582	27%	27%	0%	0%	12,763.6	12,763.6	0.0	0.0	0	8,253,818	0	0
50	0	816	20%	20%	0%	0%	9,360.0	9,360.0	0.0	0.0	0	8,486,400	0	0
55	0	868	20%	20%	0%	0%	9,360.0	9,360.0	0.0	0.0	0	9,027,200	0	0
60	0	973	0%	0%	20%	20%	0.0	0.0	0.0	0.0	0	0	0	0
65	0	1,025	0%	0%	20%	20%	0.0	0.0	0.0	0.0	0	0	0	0
70	0	620	0%	0%	33%	33%	0.0	0.0	0.0	0.0	0	0	0	0
75	0	460	0%	0%	50%	50%	0.0	0.0	0.0	0.0	0	0	0	0
80	0	246	0%	0%	67%	67%	0.0	0.0	0.0	0.0	0	0	0	0
85	0	22	0%	0%	83%	83%	0.0	0.0	0.0	0.0	0	0	0	0
90	0	2	0%	0%	100%	100%	0.0	0.0	0.0	0.0	0	0	0	0
95	0	0	0%	0%	100%	100%	0.0	0.0	0.0	0.0	0	0	0	0
100	0	0	0%	0%	100%	100%	0.0	0.0	0.0	0.0	0	0	0	0
	0	**8,760**									**0**	**113,363,782**	**0**	**0**

©2013 Energy Systems Group, LLC

ECM FFD-3
FORBES FOREST DISTRICT-MT DAVIS BOILER REPLACEMENT

Site	PA DCNR
Park	Forbes Forest District
ECM	Park Office Boiler Replacement

Savings Summary

	Existing Baseline Consumption	New Equipment w/Setback Consumption	New Equipment w/Setback Savings
Cooling kWh	0	0	0
Heating (BTU)	120,032,239.6	113,363,782	6,668,458

©2013 Energy Systems Group, LLC

ECM FFD-3
FORBES FOREST DISTRICT-MT DAVIS BOILER REPLACEMENT (CONT)

	Existing - Before Upgrade and Setback				
Cooling	SEER	15.00	HC	CBTUH	0
Heating	Efficiency	0.85	HH	HBTUH	46,800

Proposed - After Upgrade and Setback			
SEER	15.00	CBTUH	0
Efficiency	0.90	HBTUH	46,800

			Existing- Prior to Upgrade and Setback Savings											
OAT - DB Avg Temp F	Total Occupied Hours in Bin	Total Unoccupied Hours in Bin	Occupied Heating Load %	Unoccupied Heating Load %	Occupied Cooling Load %	Unoccupied Cooling Load %	Occupied Heating Load BTUH	Unoccupied Heating Load BTUH	Occupied Cooling Load BTUH	Unoccupied Cooling Load BTUH	Occupied Heating BTU	Unoccupied Heating BTU	Occupied Cooling kWh	Unoccupied Cooling kWh
-15	0	0	100%	100%	0%	0%	46,800.0	46,800.0	0.0	0.0	0	0	0	0
-10	0	0	100%	100%	0%	0%	46,800.0	46,800.0	0.0	0.0	0	0	0	0
-5	0	0	100%	100%	0%	0%	46,800.0	46,800.0	0.0	0.0	0	0	0	0
0	7	0	100%	100%	0%	0%	46,800.0	46,800.0	0.0	0.0	385,412	0	0	0
5	25	0	100%	100%	0%	0%	46,800.0	46,800.0	0.0	0.0	1,376,471	0	0	0
10	50	0	91%	91%	0%	0%	42,545.5	42,545.5	0.0	0.0	2,502,674	0	0	0
15	129	0	82%	82%	0%	0%	38,290.9	38,290.9	0.0	0.0	5,811,209	0	0	0
20	337	0	73%	73%	0%	0%	34,036.4	34,036.4	0.0	0.0	13,494,417	0	0	0
25	382	0	64%	64%	0%	0%	29,781.8	29,781.8	0.0	0.0	13,384,299	0	0	0
30	744	0	55%	55%	0%	0%	25,527.3	25,527.3	0.0	0.0	22,343,872	0	0	0
35	795	0	45%	45%	0%	0%	21,272.7	21,272.7	0.0	0.0	19,896,257	0	0	0
40	677	0	36%	36%	0%	0%	17,018.2	17,018.2	0.0	0.0	13,554,481	0	0	0
45	582	0	27%	27%	0%	0%	12,763.6	12,763.6	0.0	0.0	8,739,337	0	0	0
50	816	0	20%	20%	0%	0%	9,360.0	9,360.0	0.0	0.0	8,985,600	0	0	0
55	868	0	20%	20%	0%	0%	9,360.0	9,360.0	0.0	0.0	9,558,212	0	0	0
60	973	0	0%	0%	20%	20%	0.0	0.0	0.0	0.0	0	0	0	0
65	1,025	0	0%	0%	20%	20%	0.0	0.0	0.0	0.0	0	0	0	0
70	620	0	0%	0%	33%	33%	0.0	0.0	0.0	0.0	0	0	0	0
75	460	0	0%	0%	50%	50%	0.0	0.0	0.0	0.0	0	0	0	0
80	246	0	0%	0%	67%	67%	0.0	0.0	0.0	0.0	0	0	0	0
85	22	0	0%	0%	83%	83%	0.0	0.0	0.0	0.0	0	0	0	0
90	2	0	0%	0%	100%	100%	0.0	0.0	0.0	0.0	0	0	0	0
95	0	0	0%	0%	100%	100%	0.0	0.0	0.0	0.0	0	0	0	0
100	0	0	0%	0%	100%	100%	0.0	0.0	0.0	0.0	0	0	0	0
	8,760	**0**									**120,032,240**	**0**	**0**	**0**

©2013 Energy Systems Group, LLC

©2013 Energy Systems Group, LLC

ECM FFD-3
FORBES FOREST DISTRICT-MT DAVIS BOILER REPLACEMENT (CONT)

			Proposed - After Upgrade and Setback Savings											
OAT - DB Avg Temp F	Total Occupied Hours in Bin	Total Unoccupied Hours in Bin	Occupied Heating Load %	Unoccupied Heating Load %	Occupied Cooling Load %	Unoccupied Cooling Load %	Occupied Heating Load BTUH	Unoccupied Heating Load BTUH	Occupied Cooling Load BTUH	Unoccupied Cooling Load BTUH	Occupied Heating BTU	Unoccupied Heating BTU	Occupied Cooling kWh	Unoccupied Cooling kWh
-15	0	0	100%	100%	0%	0%	46,800.0	46,800.0	0.0	0.0	0	0	0	0
-10	0	0	100%	100%	0%	0%	46,800.0	46,800.0	0.0	0.0	0	0	0	0
-5	0	0	100%	100%	0%	0%	46,800.0	46,800.0	0.0	0.0	0	0	0	0
0	0	7	100%	100%	0%	0%	46,800.0	46,800.0	0.0	0.0	0	364,000	0	0
5	0	25	100%	100%	0%	0%	46,800.0	46,800.0	0.0	0.0	0	1,300,000	0	0
10	0	50	91%	91%	0%	0%	42,545.5	42,545.5	0.0	0.0	0	2,363,636	0	0
15	0	129	82%	82%	0%	0%	38,290.9	38,290.9	0.0	0.0	0	5,488,364	0	0
20	0	337	73%	73%	0%	0%	34,036.4	34,036.4	0.0	0.0	0	12,744,727	0	0
25	0	382	64%	64%	0%	0%	29,781.8	29,781.8	0.0	0.0	0	12,640,727	0	0
30	0	744	55%	55%	0%	0%	25,527.3	25,527.3	0.0	0.0	0	21,102,545	0	0
35	0	795	45%	45%	0%	0%	21,272.7	21,272.7	0.0	0.0	0	18,790,909	0	0
40	0	677	36%	36%	0%	0%	17,018.2	17,018.2	0.0	0.0	0	12,801,455	0	0
45	0	582	27%	27%	0%	0%	12,763.6	12,763.6	0.0	0.0	0	8,253,818	0	0
50	0	816	20%	20%	0%	0%	9,360.0	9,360.0	0.0	0.0	0	8,486,400	0	0
55	0	868	20%	20%	0%	0%	9,360.0	9,360.0	0.0	0.0	0	9,027,200	0	0
60	0	973	0%	0%	20%	20%	0.0	0.0	0.0	0.0	0	0	0	0
65	0	1,025	0%	0%	20%	20%	0.0	0.0	0.0	0.0	0	0	0	0
70	0	620	0%	0%	33%	33%	0.0	0.0	0.0	0.0	0	0	0	0
75	0	460	0%	0%	50%	50%	0.0	0.0	0.0	0.0	0	0	0	0
80	0	246	0%	0%	67%	67%	0.0	0.0	0.0	0.0	0	0	0	0
85	0	22	0%	0%	83%	83%	0.0	0.0	0.0	0.0	0	0	0	0
90	0	2	0%	0%	100%	100%	0.0	0.0	0.0	0.0	0	0	0	0
95	0	0	0%	0%	100%	100%	0.0	0.0	0.0	0.0	0	0	0	0
100	0	0	0%	0%	100%	100%	0.0	0.0	0.0	0.0	0	0	0	0
	0	**8,760**									**0**	**113,363,782**	**0**	**0**

ECM MSP-2
FORBES FOREST DISTRICT-PONDFIELD BOILER REPLACEMENT

Site	PA DCNR
Park	Moraine
ECM	Park Office Boiler Replacement

Savings Summary

	Existing Baseline Consumption	New Equipment w/Setback Consumption	New Equipment w/Setback Savings
Cooling kWh	0	0	0
Heating (BTU)	236,384,355.1	223,251,891	13,132,464

©2013 Energy Systems Group, LLC

©2013 Energy Systems Group, LLC

ECM MSP-2
FORBES FOREST DISTRICT-PONDFIELD BOILER REPLACEMENT (CONT)

	Existing - Before Upgrade and Setback				
Cooling	SEER	15.00	HC	CBTUH	0
Heating	Efficiency	0.85	HH	HBTUH	74,700

Proposed - After Upgrade and Setback			
SEER	15.00	CBTUH	0
Efficiency	0.90	HBTUH	74,700

			Existing- Prior to Upgrade and Setback Savings											
OAT - DB Avg Temp F	Total Occupied Hours in Bin	Total Unoccupied Hours in Bin	Occupied Heating Load %	Unoccupied Heating Load %	Occupied Cooling Load %	Unoccupied Cooling Load %	Occupied Heating Load BTUH	Unoccupied Heating Load BTUH	Occupied Cooling Load BTUH	Unoccupied Cooling Load BTUH	Occupied Heating BTU	Unoccupied Heating BTU	Occupied Cooling kWh	Unoccupied Cooling kWh
-15	0	0	100%	100%	0%	0%	74,700.0	74,700.0	0.0	0.0	0	0	0	0
-10	0	0	100%	100%	0%	0%	74,700.0	74,700.0	0.0	0.0	0	0	0	0
-5	16	0	100%	100%	0%	0%	74,700.0	74,700.0	0.0	0.0	1,406,118	0	0	0
0	26	0	100%	100%	0%	0%	74,700.0	74,700.0	0.0	0.0	2,284,941	0	0	0
5	62	0	100%	100%	0%	0%	74,700.0	74,700.0	0.0	0.0	5,448,706	0	0	0
10	142	0	91%	91%	0%	0%	67,909.1	67,909.1	0.0	0.0	11,344,813	0	0	0
15	255	0	82%	82%	0%	0%	61,118.2	61,118.2	0.0	0.0	18,335,455	0	0	0
20	463	0	73%	73%	0%	0%	54,327.3	54,327.3	0.0	0.0	29,592,385	0	0	0
25	723	0	64%	64%	0%	0%	47,536.4	47,536.4	0.0	0.0	40,433,872	0	0	0
30	846	0	55%	55%	0%	0%	40,745.5	40,745.5	0.0	0.0	40,553,711	0	0	0
35	801	0	45%	45%	0%	0%	33,954.5	33,954.5	0.0	0.0	31,997,166	0	0	0
40	636	0	36%	36%	0%	0%	27,163.6	27,163.6	0.0	0.0	20,324,791	0	0	0
45	476	0	27%	27%	0%	0%	20,372.7	20,372.7	0.0	0.0	11,408,727	0	0	0
50	629	0	20%	20%	0%	0%	14,940.0	14,940.0	0.0	0.0	11,055,600	0	0	0
55	694	0	20%	20%	0%	0%	14,940.0	14,940.0	0.0	0.0	12,198,071	0	0	0
60	976	0	0%	0%	20%	20%	0.0	0.0	0.0	0.0	0	0	0	0
65	836	0	0%	0%	20%	20%	0.0	0.0	0.0	0.0	0	0	0	0
70	559	0	0%	0%	33%	33%	0.0	0.0	0.0	0.0	0	0	0	0
75	384	0	0%	0%	50%	50%	0.0	0.0	0.0	0.0	0	0	0	0
80	164	0	0%	0%	67%	67%	0.0	0.0	0.0	0.0	0	0	0	0
85	60	0	0%	0%	83%	83%	0.0	0.0	0.0	0.0	0	0	0	0
90	12	0	0%	0%	100%	100%	0.0	0.0	0.0	0.0	0	0	0	0
95	0	0	0%	0%	100%	100%	0.0	0.0	0.0	0.0	0	0	0	0
100	0	0	0%	0%	100%	100%	0.0	0.0	0.0	0.0	0	0	0	0
	8,760	**0**									**236,384,355**	**0**	**0**	**0**

ECM MSP-2
FORBES FOREST DISTRICT-PONDFIELD BOILER REPLACEMENT

			Proposed - After Upgrade and Setback Savings											
OAT - DB Avg Temp F	Total Occupied Hours in Bin	Total Unoccupied Hours in Bin	Occupied Heating Load %	Unoccupied Heating Load %	Occupied Cooling Load %	Unoccupied Cooling Load %	Occupied Heating Load BTUH	Unoccupied Heating Load BTUH	Occupied Cooling Load BTUH	Unoccupied Cooling Load BTUH	Occupied Heating BTU	Unoccupied Heating BTU	Occupied Cooling kWh	Unoccupied Cooling kWh
-15	0	0	100%	100%	0%	0%	74,700.0	74,700.0	0.0	0.0	0	0	0	0
-10	0	0	100%	100%	0%	0%	74,700.0	74,700.0	0.0	0.0	0	0	0	0
-5	0	16	100%	100%	0%	0%	74,700.0	74,700.0	0.0	0.0	0	1,328,000	0	0
0	0	26	100%	100%	0%	0%	74,700.0	74,700.0	0.0	0.0	0	2,158,000	0	0
5	0	62	100%	100%	0%	0%	74,700.0	74,700.0	0.0	0.0	0	5,146,000	0	0
10	0	142	91%	91%	0%	0%	67,909.1	67,909.1	0.0	0.0	0	10,714,545	0	0
15	0	255	82%	82%	0%	0%	61,118.2	61,118.2	0.0	0.0	0	17,316,818	0	0
20	0	463	73%	73%	0%	0%	54,327.3	54,327.3	0.0	0.0	0	27,948,364	0	0
25	0	723	64%	64%	0%	0%	47,536.4	47,536.4	0.0	0.0	0	38,187,545	0	0
30	0	846	55%	55%	0%	0%	40,745.5	40,745.5	0.0	0.0	0	38,300,727	0	0
35	0	801	45%	45%	0%	0%	33,954.5	33,954.5	0.0	0.0	0	30,219,545	0	0
40	0	636	36%	36%	0%	0%	27,163.6	27,163.6	0.0	0.0	0	19,195,636	0	0
45	0	476	27%	27%	0%	0%	20,372.7	20,372.7	0.0	0.0	0	10,774,909	0	0
50	0	629	20%	20%	0%	0%	14,940.0	14,940.0	0.0	0.0	0	10,441,400	0	0
55	0	694	20%	20%	0%	0%	14,940.0	14,940.0	0.0	0.0	0	11,520,400	0	0
60	0	976	0%	0%	20%	20%	0.0	0.0	0.0	0.0	0	0	0	0
65	0	836	0%	0%	20%	20%	0.0	0.0	0.0	0.0	0	0	0	0
70	0	559	0%	0%	33%	33%	0.0	0.0	0.0	0.0	0	0	0	0
75	0	384	0%	0%	50%	50%	0.0	0.0	0.0	0.0	0	0	0	0
80	0	164	0%	0%	67%	67%	0.0	0.0	0.0	0.0	0	0	0	0
85	0	60	0%	0%	83%	83%	0.0	0.0	0.0	0.0	0	0	0	0
90	0	12	0%	0%	100%	100%	0.0	0.0	0.0	0.0	0	0	0	0
95	0	0	0%	0%	100%	100%	0.0	0.0	0.0	0.0	0	0	0	0
100	0	0	0%	0%	100%	100%	0.0	0.0	0.0	0.0	0	0	0	0
	0	**8,760**									**0**	**223,251,891**	**0**	**0**

©2013 Energy Systems Group, LLC

ECM PYSP-1
PYMATUNING JAMESTOWN MAINTENANCE BOILER REPLACEMENT

Site	PA DCNR
Park	Pymatuning
ECM	Jamestown Maint Boiler Replacement

Savings Summary

	Existing Baseline Consumption	New Equipment w/Setback Consumption	New Equipment w/Setback Savings
Cooling kWh	0	0	0
Heating (BTU)	302,741,441.7	285,922,473	16,818,969

©2013 Energy Systems Group, LLC

ECM PYSP-1
PYMATUNING JAMESTOWN MAINTENANCE BOILER REPLACEMENT (CONT)

	Existing - Before Upgrade and Setback				
Cooling	SEER	15.00	HC	CBTUH	0
Heating	Efficiency	0.85	HH	HBTUH	95,400

Proposed - After Upgrade and Setback			
SEER	15.00	CBTUH	0
Efficiency	0.90	HBTUH	95,400

			Existing- Prior to Upgrade and Setback Savings											
OAT - DB Avg Temp F	Total Occupied Hours in Bin	Total Unoccupied Hours in Bin	Occupied Heating Load %	Unoccupied Heating Load %	Occupied Cooling Load %	Unoccupied Cooling Load %	Occupied Heating Load BTUH	Unoccupied Heating Load BTUH	Occupied Cooling Load BTUH	Unoccupied Cooling Load BTUH	Occupied Heating BTU	Unoccupied Heating BTU	Occupied Cooling kWh	Unoccupied Cooling kWh
-15	0	0	100%	100%	0%	0%	95,400.0	95,400.0	0.0	0.0	0	0	0	0
-10	0	0	100%	100%	0%	0%	95,400.0	95,400.0	0.0	0.0	0	0	0	0
-5	28	0	100%	100%	0%	0%	95,400.0	95,400.0	0.0	0.0	3,142,588	0	0	0
0	44	0	100%	100%	0%	0%	95,400.0	95,400.0	0.0	0.0	4,938,353	0	0	0
5	115	0	100%	100%	0%	0%	95,400.0	95,400.0	0.0	0.0	12,907,059	0	0	0
10	215	0	91%	91%	0%	0%	86,727.3	86,727.3	0.0	0.0	21,936,898	0	0	0
15	348	0	82%	82%	0%	0%	78,054.5	78,054.5	0.0	0.0	31,956,449	0	0	0
20	342	0	73%	73%	0%	0%	69,381.8	69,381.8	0.0	0.0	27,915,979	0	0	0
25	418	0	64%	64%	0%	0%	60,709.1	60,709.1	0.0	0.0	29,854,588	0	0	0
30	672	0	55%	55%	0%	0%	52,036.4	52,036.4	0.0	0.0	41,139,337	0	0	0
35	976	0	45%	45%	0%	0%	43,363.6	43,363.6	0.0	0.0	49,791,658	0	0	0
40	748	0	36%	36%	0%	0%	34,690.9	34,690.9	0.0	0.0	30,528,000	0	0	0
45	598	0	27%	27%	0%	0%	26,018.2	26,018.2	0.0	0.0	18,304,556	0	0	0
50	716	0	20%	20%	0%	0%	19,080.0	19,080.0	0.0	0.0	16,072,094	0	0	0
55	635	0	20%	20%	0%	0%	19,080.0	19,080.0	0.0	0.0	14,253,882	0	0	0
60	857	0	0%	0%	20%	20%	0.0	0.0	0.0	0.0	0	0	0	0
65	818	0	0%	0%	20%	20%	0.0	0.0	0.0	0.0	0	0	0	0
70	499	0	0%	0%	33%	33%	0.0	0.0	0.0	0.0	0	0	0	0
75	380	0	0%	0%	50%	50%	0.0	0.0	0.0	0.0	0	0	0	0
80	259	0	0%	0%	67%	67%	0.0	0.0	0.0	0.0	0	0	0	0
85	88	0	0%	0%	83%	83%	0.0	0.0	0.0	0.0	0	0	0	0
90	4	0	0%	0%	100%	100%	0.0	0.0	0.0	0.0	0	0	0	0
95	0	0	0%	0%	100%	100%	0.0	0.0	0.0	0.0	0	0	0	0
100	0	0	0%	0%	100%	100%	0.0	0.0	0.0	0.0	0	0	0	0
	8,760	0									302,741,442	0	0	0

©2013 Energy Systems Group, LLC

ECM PYSP-1
PYMATUNING JAMESTOWN MAINTENANCE BOILER REPLACEMENT (CONT)

			Proposed - After Upgrade and Setback Savings											
OAT - DB Avg Temp F	Total Occupied Hours in Bin	Total Unoccupied Hours in Bin	Occupied Heating Load %	Unoccupied Heating Load %	Occupied Cooling Load %	Unoccupied Cooling Load %	Occupied Heating Load BTUH	Unoccupied Heating Load BTUH	Occupied Cooling Load BTUH	Unoccupied Cooling Load BTUH	Occupied Heating BTU	Unoccupied Heating BTU	Occupied Cooling kWh	Unoccupied Cooling kWh
-15	0	0	100%	100%	0%	0%	95,400.0	95,400.0	0.0	0.0	0	0	0	0
-10	0	0	100%	100%	0%	0%	95,400.0	95,400.0	0.0	0.0	0	0	0	0
-5	0	28	100%	100%	0%	0%	95,400.0	95,400.0	0.0	0.0	0	2,968,000	0	0
0	0	44	100%	100%	0%	0%	95,400.0	95,400.0	0.0	0.0	0	4,664,000	0	0
5	0	115	100%	100%	0%	0%	95,400.0	95,400.0	0.0	0.0	0	12,190,000	0	0
10	0	215	91%	91%	0%	0%	86,727.3	86,727.3	0.0	0.0	0	20,718,182	0	0
15	0	348	82%	82%	0%	0%	78,054.5	78,054.5	0.0	0.0	0	30,181,091	0	0
20	0	342	73%	73%	0%	0%	69,381.8	69,381.8	0.0	0.0	0	26,365,091	0	0
25	0	418	64%	64%	0%	0%	60,709.1	60,709.1	0.0	0.0	0	28,196,000	0	0
30	0	672	55%	55%	0%	0%	52,036.4	52,036.4	0.0	0.0	0	38,853,818	0	0
35	0	976	45%	45%	0%	0%	43,363.6	43,363.6	0.0	0.0	0	47,025,455	0	0
40	0	748	36%	36%	0%	0%	34,690.9	34,690.9	0.0	0.0	0	28,832,000	0	0
45	0	598	27%	27%	0%	0%	26,018.2	26,018.2	0.0	0.0	0	17,287,636	0	0
50	0	716	20%	20%	0%	0%	19,080.0	19,080.0	0.0	0.0	0	15,179,200	0	0
55	0	635	20%	20%	0%	0%	19,080.0	19,080.0	0.0	0.0	0	13,462,000	0	0
60	0	857	0%	0%	20%	20%	0.0	0.0	0.0	0.0	0	0	0	0
65	0	818	0%	0%	20%	20%	0.0	0.0	0.0	0.0	0	0	0	0
70	0	499	0%	0%	33%	33%	0.0	0.0	0.0	0.0	0	0	0	0
75	0	380	0%	0%	50%	50%	0.0	0.0	0.0	0.0	0	0	0	0
80	0	259	0%	0%	67%	67%	0.0	0.0	0.0	0.0	0	0	0	0
85	0	88	0%	0%	83%	83%	0.0	0.0	0.0	0.0	0	0	0	0
90	0	4	0%	0%	100%	100%	0.0	0.0	0.0	0.0	0	0	0	0
95	0	0	0%	0%	100%	100%	0.0	0.0	0.0	0.0	0	0	0	0
100	0	0	0%	0%	100%	100%	0.0	0.0	0.0	0.0	0	0	0	0
	0	**8,760**									**0**	**285,922,473**	**0**	**0**

©2013 Energy Systems Group, LLC

ECM PYSP-2
PYMATUNING PARK OFFICE BOILER REPLACEMENT

Site	PA DCNR
Park	Pymatuning
ECM	Office Boiler

Savings Summary

	Existing Baseline Consumption	New Equipment w/Setback Consumption	New Equipment w/Setback Savings
Cooling kWh	0	0	0
Heating (BTU)	328,445,903.7	328,445,904	0

©2013 Energy Systems Group, LLC

©2013 Energy Systems Group, LLC

ECM PYSP-2
PYMATUNING PARK OFFICE BOILER REPLACEMENT (CONT)

	Existing - Before Upgrade and Setback				
Cooling	SEER	15.00	HC	CBTUH	0
Heating	Efficiency	0.85	HH	HBTUH	103,500

Proposed - After Upgrade and Setback			
SEER	15.00	CBTUH	0
Efficiency	0.85	HBTUH	103,500

			Existing- Prior to Upgrade and Setback Savings											
OAT - DB Avg Temp F	Total Occupied Hours in Bin	Total Unoccupied Hours in Bin	Occupied Heating Load %	Unoccupied Heating Load %	Occupied Cooling Load %	Unoccupied Cooling Load %	Occupied Heating Load BTUH	Unoccupied Heating Load BTUH	Occupied Cooling Load BTUH	Unoccupied Cooling Load BTUH	Occupied Heating BTU	Unoccupied Heating BTU	Occupied Cooling kWh	Unoccupied Cooling kWh
-15	0	0	100%	100%	0%	0%	103,500.0	103,500.0	0.0	0.0	0	0	0	0
-10	0	0	100%	100%	0%	0%	103,500.0	103,500.0	0.0	0.0	0	0	0	0
-5	28	0	100%	100%	0%	0%	103,500.0	103,500.0	0.0	0.0	3,409,412	0	0	0
0	44	0	100%	100%	0%	0%	103,500.0	103,500.0	0.0	0.0	5,357,647	0	0	0
5	115	0	100%	100%	0%	0%	103,500.0	103,500.0	0.0	0.0	14,002,941	0	0	0
10	215	0	91%	91%	0%	0%	94,090.9	94,090.9	0.0	0.0	23,799,465	0	0	0
15	348	0	82%	82%	0%	0%	84,681.8	84,681.8	0.0	0.0	34,669,733	0	0	0
20	342	0	73%	73%	0%	0%	75,272.7	75,272.7	0.0	0.0	30,286,203	0	0	0
25	418	0	64%	64%	0%	0%	65,863.6	65,863.6	0.0	0.0	32,389,412	0	0	0
30	672	0	55%	55%	0%	0%	56,454.5	56,454.5	0.0	0.0	44,632,299	0	0	0
35	976	0	45%	45%	0%	0%	47,045.5	47,045.5	0.0	0.0	54,019,251	0	0	0
40	748	0	36%	36%	0%	0%	37,636.4	37,636.4	0.0	0.0	33,120,000	0	0	0
45	598	0	27%	27%	0%	0%	28,227.3	28,227.3	0.0	0.0	19,858,717	0	0	0
50	716	0	20%	20%	0%	0%	20,700.0	20,700.0	0.0	0.0	17,436,706	0	0	0
55	635	0	20%	20%	0%	0%	20,700.0	20,700.0	0.0	0.0	15,464,118	0	0	0
60	857	0	0%	0%	20%	20%	0.0	0.0	0.0	0.0	0	0	0	0
65	818	0	0%	0%	20%	20%	0.0	0.0	0.0	0.0	0	0	0	0
70	499	0	0%	0%	33%	33%	0.0	0.0	0.0	0.0	0	0	0	0
75	380	0	0%	0%	50%	50%	0.0	0.0	0.0	0.0	0	0	0	0
80	259	0	0%	0%	67%	67%	0.0	0.0	0.0	0.0	0	0	0	0
85	88	0	0%	0%	83%	83%	0.0	0.0	0.0	0.0	0	0	0	0
90	4	0	0%	0%	100%	100%	0.0	0.0	0.0	0.0	0	0	0	0
95	0	0	0%	0%	100%	100%	0.0	0.0	0.0	0.0	0	0	0	0
100	0	0	0%	0%	100%	100%	0.0	0.0	0.0	0.0	0	0	0	0
	8,760	**0**									**328,445,904**	**0**	**0**	**0**

ECM PYSP-2
PYMATUNING PARK OFFICE BOILER REPLACEMENT (CONT)

			Proposed - After Upgrade and Setback Savings											
OAT - DB Avg Temp F	Total Occupied Hours in Bin	Total Unoccupied Hours in Bin	Occupied Heating Load %	Unoccupied Heating Load %	Occupied Cooling Load %	Unoccupied Cooling Load %	Occupied Heating Load BTUH	Unoccupied Heating Load BTUH	Occupied Cooling Load BTUH	Unoccupied Cooling Load BTUH	Occupied Heating BTU	Unoccupied Heating BTU	Occupied Cooling kWh	Unoccupied Cooling kWh
-15	0	0	100%	100%	0%	0%	103,500.0	103,500.0	0.0	0.0	0	0	0	0
-10	0	0	100%	100%	0%	0%	103,500.0	103,500.0	0.0	0.0	0	0	0	0
-5	0	28	100%	100%	0%	0%	103,500.0	103,500.0	0.0	0.0	0	3,409,412	0	0
0	0	44	100%	100%	0%	0%	103,500.0	103,500.0	0.0	0.0	0	5,357,647	0	0
5	0	115	100%	100%	0%	0%	103,500.0	103,500.0	0.0	0.0	0	14,002,941	0	0
10	0	215	91%	91%	0%	0%	94,090.9	94,090.9	0.0	0.0	0	23,799,465	0	0
15	0	348	82%	82%	0%	0%	84,681.8	84,681.8	0.0	0.0	0	34,669,733	0	0
20	0	342	73%	73%	0%	0%	75,272.7	75,272.7	0.0	0.0	0	30,286,203	0	0
25	0	418	64%	64%	0%	0%	65,863.6	65,863.6	0.0	0.0	0	32,389,412	0	0
30	0	672	55%	55%	0%	0%	56,454.5	56,454.5	0.0	0.0	0	44,632,299	0	0
35	0	976	45%	45%	0%	0%	47,045.5	47,045.5	0.0	0.0	0	54,019,251	0	0
40	0	748	36%	36%	0%	0%	37,636.4	37,636.4	0.0	0.0	0	33,120,000	0	0
45	0	598	27%	27%	0%	0%	28,227.3	28,227.3	0.0	0.0	0	19,858,717	0	0
50	0	716	20%	20%	0%	0%	20,700.0	20,700.0	0.0	0.0	0	17,436,706	0	0
55	0	635	20%	20%	0%	0%	20,700.0	20,700.0	0.0	0.0	0	15,464,118	0	0
60	0	857	0%	0%	20%	20%	0.0	0.0	0.0	0.0	0	0	0	0
65	0	818	0%	0%	20%	20%	0.0	0.0	0.0	0.0	0	0	0	0
70	0	499	0%	0%	33%	33%	0.0	0.0	0.0	0.0	0	0	0	0
75	0	380	0%	0%	50%	50%	0.0	0.0	0.0	0.0	0	0	0	0
80	0	259	0%	0%	67%	67%	0.0	0.0	0.0	0.0	0	0	0	0
85	0	88	0%	0%	83%	83%	0.0	0.0	0.0	0.0	0	0	0	0
90	0	4	0%	0%	100%	100%	0.0	0.0	0.0	0.0	0	0	0	0
95	0	0	0%	0%	100%	100%	0.0	0.0	0.0	0.0	0	0	0	0
100	0	0	0%	0%	100%	100%	0.0	0.0	0.0	0.0	0	0	0	0
	0	**8,760**									**0**	**328,445,904**	**0**	**0**

©2013 Energy Systems Group, LLC

ECM MSP-1
MORAINE STATE PARK CABIN HEAT CONTROL

Site	PA DCNR
Park	Moraine
ECM	Cabin Heat Control

Savings Summary

	Existing Baseline Consumption	Existing Equipment w/setback Consumption	Existing Equipment w/setback Savings
Cooling kWh	0	0	0
Heating (kWh)	21,907.8	20,701.9	1,206

©2013 Energy Systems Group, LLC

©2013 Energy Systems Group, LLC

ECM MSP-1
MORAINE STATE PARK CABIN HEAT CONTROL (CONT)

	Existing - Before Upgrade and Setback				
Cooling	SEER	15.00	HC	CBTUH	0
Heating	COP	1.00	HH	HBTUH	25,590

Proposed - After Upgrade and Setback			
SEER	15.00	CBTUH	0
COP	1.00	HBTUH	25,590

			Existing- Prior to Upgrade and Setback Savings											
OAT - DB Avg Temp F	Total Occupied Hours in Bin	Total Unoccupied Hours in Bin	Occupied Heating Load %	Unoccupied Heating Load %	Occupied Cooling Load %	Unoccupied Cooling Load %	Occupied Heating Load BTUH	Unoccupied Heating Load BTUH	Occupied Cooling Load BTUH	Unoccupied Cooling Load BTUH	Occupied Heating kWh	Unoccupied Heating kWh	Occupied Cooling kWh	Unoccupied Cooling kWh
-15	0	0	100%	100%	0%	0%	25,590.0	25,590.0	0.0	0.0	0	0	0	0
-10	0	0	100%	100%	0%	0%	25,590.0	25,590.0	0.0	0.0	0	0	0	0
-5	16	0	100%	100%	0%	0%	25,590.0	25,590.0	0.0	0.0	120	0	0	0
0	26	0	100%	100%	0%	0%	25,590.0	25,590.0	0.0	0.0	195	0	0	0
5	62	0	100%	100%	0%	0%	25,590.0	25,590.0	0.0	0.0	465	0	0	0
10	142	0	100%	100%	0%	0%	25,590.0	25,590.0	0.0	0.0	1,065	0	0	0
15	255	0	90%	90%	0%	0%	23,031.0	23,031.0	0.0	0.0	1,721	0	0	0
20	463	0	80%	80%	0%	0%	20,472.0	20,472.0	0.0	0.0	2,777	0	0	0
25	723	0	70%	70%	0%	0%	17,913.0	17,913.0	0.0	0.0	3,795	0	0	0
30	846	0	60%	60%	0%	0%	15,354.0	15,354.0	0.0	0.0	3,806	0	0	0
35	801	0	50%	50%	0%	0%	12,795.0	12,795.0	0.0	0.0	3,003	0	0	0
40	636	0	40%	40%	0%	0%	10,236.0	10,236.0	0.0	0.0	1,907	0	0	0
45	476	0	30%	30%	0%	0%	7,677.0	7,677.0	0.0	0.0	1,071	0	0	0
50	629	0	20%	20%	0%	0%	5,118.0	5,118.0	0.0	0.0	943	0	0	0
55	694	0	20%	20%	0%	0%	5,118.0	5,118.0	0.0	0.0	1,041	0	0	0
60	976	0	0%	0%	20%	20%	0.0	0.0	0.0	0.0	0	0	0	0
65	836	0	0%	0%	20%	20%	0.0	0.0	0.0	0.0	0	0	0	0
70	559	0	0%	0%	33%	33%	0.0	0.0	0.0	0.0	0	0	0	0
75	384	0	0%	0%	50%	50%	0.0	0.0	0.0	0.0	0	0	0	0
80	164	0	0%	0%	67%	67%	0.0	0.0	0.0	0.0	0	0	0	0
85	60	0	0%	0%	83%	83%	0.0	0.0	0.0	0.0	0	0	0	0
90	12	0	0%	0%	100%	100%	0.0	0.0	0.0	0.0	0	0	0	0
95	0	0	0%	0%	100%	100%	0.0	0.0	0.0	0.0	0	0	0	0
100	0	0	0%	0%	100%	100%	0.0	0.0	0.0	0.0	0	0	0	0
	8,760	**0**									**21,908**	**0**	**0**	**0**

©2013 Energy Systems Group, LLC

ECM MSP-1
MORAINE STATE PARK CABIN HEAT CONTROL (CONT)

			Existing- Setback Only to original Equipment											
OAT - DB Avg Temp F	Total Occupied Hours in Bin	Total Unoccupied Hours in Bin	Occupied Heating Load %	Unoccupied Heating Load %	Occupied Cooling Load %	Unoccupied Cooling Load %	Occupied Heating Load BTUH	Unoccupied Heating Load BTUH	Occupied Cooling Load BTUH	Unoccupied Cooling Load BTUH	Occupied Heating kWh	Unoccupied Heating kWh	Occupied Cooling kWh	Unoccupied Cooling kWh
-15	0	0	100%	100%	0%	0%	25,590.0	25,590.0	0.0	0.0	0	0	0	0
-10	0	0	100%	100%	0%	0%	25,590.0	25,590.0	0.0	0.0	0	0	0	0
-5	13	3	100%	100%	0%	0%	25,590.0	25,590.0	0.0	0.0	97	22	0	0
0	21	5	100%	97%	0%	0%	25,590.0	24,764.5	0.0	0.0	157	36	0	0
5	46	16	100%	89%	0%	0%	25,590.0	22,700.8	0.0	0.0	345	106	0	0
10	103	39	100%	81%	0%	0%	25,590.0	20,637.1	0.0	0.0	772	236	0	0
15	187	68	90%	73%	0%	0%	23,031.0	18,573.4	0.0	0.0	1,262	370	0	0
20	354	109	80%	65%	0%	0%	20,472.0	16,509.7	0.0	0.0	2,123	527	0	0
25	504	219	70%	56%	0%	0%	17,913.0	14,446.0	0.0	0.0	2,645	927	0	0
30	581	265	60%	48%	0%	0%	15,354.0	12,382.3	0.0	0.0	2,614	961	0	0
35	530	271	50%	40%	0%	0%	12,795.0	10,318.5	0.0	0.0	1,987	819	0	0
40	440	196	40%	32%	0%	0%	10,236.0	8,254.8	0.0	0.0	1,320	474	0	0
45	360	116	30%	24%	0%	0%	7,677.0	6,191.1	0.0	0.0	810	210	0	0
50	454	175	20%	16%	0%	0%	5,118.0	4,127.4	0.0	0.0	681	212	0	0
55	507	187	20%	16%	0%	0%	5,118.0	4,127.4	0.0	0.0	760	226	0	0
60	715	261	0%	0%	20%	20%	0.0	0.0	0.0	0.0	0	0	0	0
65	530	306	0%	0%	20%	20%	0.0	0.0	0.0	0.0	0	0	0	0
70	263	296	0%	0%	33%	33%	0.0	0.0	0.0	0.0	0	0	0	0
75	148	236	0%	0%	50%	50%	0.0	0.0	0.0	0.0	0	0	0	0
80	58	106	0%	0%	67%	67%	0.0	0.0	0.0	0.0	0	0	0	0
85	24	36	0%	0%	83%	83%	0.0	0.0	0.0	0.0	0	0	0	0
90	2	10	0%	0%	100%	100%	0.0	0.0	0.0	0.0	0	0	0	0
95	0	0	0%	0%	100%	100%	0.0	0.0	0.0	0.0	0	0	0	0
100	0	0	0%	0%	100%	100%	0.0	0.0	0.0	0.0	0	0	0	0
	5,840	**2,920**									**15,574**	**5,128**	**0**	**0**

EQUIPMENT CUTSHEETS

LIGHTING

©2013 Energy Systems Group, LLC

All LED Emergency Exit Combo Unit

All LED Combo Exit Signs

120 or 277 Voltage, Damp Location

Catalog Number	
Notes	Type

Features and Benefits:

- 120/277 VAC dual voltage operation
- LVD (Low Voltage Disconnect) prevents battery from deep discharge
- 7 year, maintenance-free Ni-Cad battery
- 90 minute run time in emergency mode
- Mounting canopy provided - top end or back mounting
- V-0 flame retardant



Dimensions:

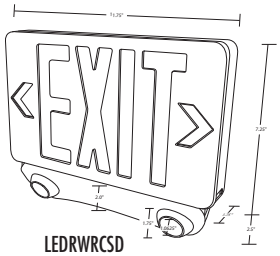

LEDRWRCSD

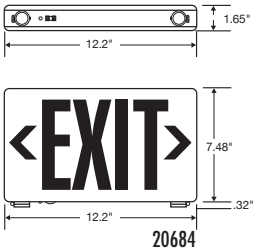

20684

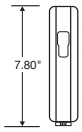



LED20784

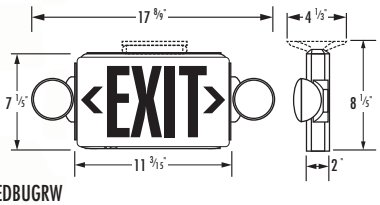

LEDBUGRW

Warranties & Compliances:

Ni-Cad Battery
7 YEAR WARRANTY

Sealed Lead Acid
1 YEAR WARRANTY

Electronics
5 YEAR WARRANTY

LED Strip
25 YEAR WARRANTY

For the most up-to-date specs, please visit www.tcpi.com

Ordering Information:

TCP Part #	Description	LED Color	Housing Color	AC/BBUP
20684	LED Exit EMG Combo, Red Letters, White Housing	Red	White	BBUP
20685	LED Exit EMG Combo, Green Letters, White Housing	Green	White	BBUP
LED20723	LED Combo Universal Face, Red Letters, White Housing	Red	White	BBUP
LED20725	LED Combo Universal Face, Green Letters, White Housing	Green	White	BBUP
LED20784B	LED Combo Universal Face, Red Letters, Black Housing, Remote Capable	Red	Black	BBUP
LED20785B	LED Combo Universal Face, Green Letters, Black Housing, Remote Capable	Green	Black	BBUP
LED20784	LED Combo Universal Face, Red Letters, White Housing, Remote Capable	Red	White	BBUP
LED20785	LED Combo Universal Face, Green Letters, White Housing, Remote Capable	Green	White	BBUP
LEDRWRCSD	LED,Compact Red Combo White Housing Remote Capable Self Diagnostic	Red	White	BBUP
LEDGWRCSD	LED,Compact Green Combo White Housing Remote Capable Self Diagnostic	Green	White	BBUP
LEDBUGRW	LED BugEye Combo Red Letters with White Housing	Red	White	BBUP
LEDBUGGW	LED BugEye Combo Green Letters with White Housing	Green	White	BBUP
LEDBUGRWB	LED BugEye Combo Red Letters with Black Housing	Red	Black	BBUP
LEDBUGGWB	LED BugEye Combo Green Letters with Black Housing	Green	Black	BBUP

Accessories

20684/20685

20704	Canopy
206HDS	Replacement Heads For Combo
COMBOWG	Combo Wire Guard
COMBOBG	Combo Bubble Guard

LED20723/LED20785

20704	Canopy
LEDRH1	LED Remote Head Single SDT
LEDRH2	LED Double Remote Head SDT
LEDRH1B	LED Remote Head Single SDT Black
LEDRH2B	LED Double Remote Head SDT Black
LEDRH1WLSDT	Wet Location LED Single Head
LEDRH2WLSDT	Wet Location LED 2 Remote Head
COMBOWG	Combo Wire Guard
COMBOBG	Combo Bubble Guard

LEDGWRCSD

20704	Canopy
COMBOWG	Combo Wire Guard
COMBOBG	Combo Bubble Guard
LEDSNAPRH1	LED Single WH Remote Head Snap
LEDSNAPRH2	LED Double Head Snap

LEDBUGRW/LEDBUGGW/LEDBUGRWB/LEDBUGGWB

20704	Canopy
COMBOWG	Combo Wire Guard
COMBOBG	Combo Bubble Guard

TCP, Inc.
325 Campus Dr. | Aurora, Ohio 44202 | P: 1-800-324-1496 | F: 330-995-6188 | tcpi.com
©TCP, Inc. SEP 2013/51219

Compact Polycarbonate Exit Signs Specification

LED Exit Signs	120 or 277 Voltage, Damp Location

Catalog Number	
Notes	Type



Features and Benefits:

- Injection-molded thermoplastic ABS housing
- UL 94V-0 flame rating
- Innovative, snap-together design allows for fast installation
- Replaceable directional chevron inserts are easily removed and reinserted
- Letters 6" height with 3/4" stroke
- Single or double face configuration
- Universal mounting- wall, side, or ceiling
- Housing snaps to canopy with simple twist and locking tightly secure housing to canopy
- 120/277 VAC dual voltage operation
- Low energy consumption - .92w at double face application
- LED indicator light and push button test switch
- LEDs mounted on print circuit board
- LED lamps are operating in normal (AC input) and emergency (DC input) modes
- 24 hours recharge after 90 minute discharge
- Low voltage battery disconnection- preventing deep discharge damage to the battery
- Maintenance-Free, Ni-Cd battery provides an estimated service life of 10 years with an operating temperature range of 10C to 40C
- ETL Listed for damp location
- Meets NFPA 101, NEC, and UL924 approvals
- Assembled in the USA

Assembled in USA

Dimensions:

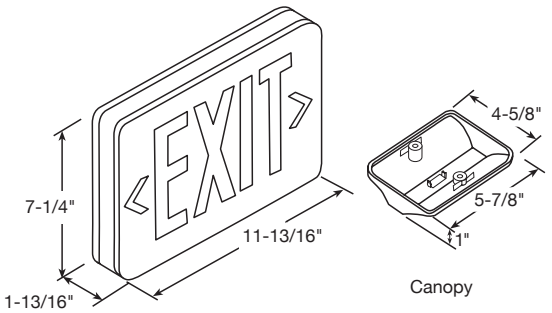

Warranties & Compliances:

NFPA® NATIONAL FIRE PROTECTION ASSN.

Ni-Cd battery 5 YEAR WARRANTY

Electronics 5 YEAR WARRANTY

LED Strip 25 YEAR WARRANTY

Ordering Information:

Item #	Description	LED Color	Housing Color	AC/BBUP
22743US	Red LED Exit Sign Universal Battery Backup WH Housing	Red	White	BBUP
22745US	Green LED Exit Sign Universal Battery Backup WH Housing	Green	White	BBUP
22742US	Red LED Exit Sign AC Only WH Housing	Red	White	AC Only

Accessories:

207WG	Wire Guard for Exit Sign
207WGWH	White Wire Guard for Exit Sign
207PS	Polycarbonate Shield for Exit Sign
207B3	Replacement Battery Ni-Cd 3.6V 300mAh for 22745 & 22749 units
207B2	Replacement Battery Ni-Cd 2.4V 300mAh for 22743 & 22747 units
29999	Red Diffuser Panel
29999G	Green Diffuser Panel
20704	Replacement White Canopy
CHEVRONPL	Replacement White Chevron

TCP, Inc.
325 Campus Dr. | Aurora, Ohio 44202 | P: 1-800-324-1496 | F: 330-995-6188 | tcpi.com

©TCP, Inc. SEPT 2013/51246

TCP is proud to have been awarded ENERGY STAR® Partner of the Year 2013.

ENERGY STAR AWARD 2013 PARTNER OF THE YEAR

Catalog Number

Notes	Type



Dimensions:

ALED3T50/PCT



Specification grade area lights available in IES Type III distributions. For use for roadway, general parking and other area lighting applications where a larger pool of lighting is required. Mounts to 4" square steel poles at 20-35'. Patent pending thermal management system. 5 Year Warranty.

Color: Bronze Weight: 32.0 lbs

Project:	Type:
Prepared By:	Date:

Driver Info		LED Info	
Type:	Constant Current	Watts:	50W
120V:	0.46A	Color Temp:	5000K
208V:	0.27A	Color Accuracy:	71 CRI
240V:	0.23A	L70 Lifespan:	100000
277V:	0.20A	Lumens:	6855
Input Watts:	55W	Efficacy:	124 LPW
Efficiency:	91%		

Technical Specifications

Electrical

Photocell:

120-277V twistlock photocell included. Photocell is compatible with 120-277V.

Driver:

Constant Current, Class 2, 1400mA, 100-277V, 50-60Hz, 0.8A, Power Factor 99%

Surge Protection:

6kV surge suppression protection tested in accordance with IEEE/ANSI C62.41.2.

THD:

6.1% at 120V, 9.4% at 277V

Power Factor:

99.6% at 120V, 96% at 277V

Listings

UL Listing:

Suitable for wet locations as a downlight.

IESNA LM-79 & IESNA LM-80 Testing:

RAB LED fixtures have been tested by an independent laboratory in accordance with IESNA LM-79 and 80, and have received the Department of Energy "Lighting Facts" label.

Dark Sky Approved:

The International Dark Sky Association has approved this product as a full cutoff, fully shielded luminaire.

LED Characteristics

Lifespan:

100,000-hour LED lifespan based on IES LM-80 results and TM-21 calculations.

LEDs:

Multi-chip, high-output, long-life LEDs

Color Consistency:

7-step MacAdam Ellipse binning to achieve consistent fixture-to-fixture color.

Color Stability:

LED color temperature is warrantied to shift no more than 200K in CCT over a 5 year period.

Color Uniformity:

RAB's range of CCT (Correlated Color Temperature) follows the guidelines of the American National Standard for Specifications for the Chromaticity of Solid State Lighting (SSL) Products, ANSI C78.377-2017.

Construction

IES Classification:

The Type III distribution is ideal for roadway, general parking and other area lighting applications where a larger pool of lighting is required. It is intended to be located near the side of the area, allowing the light to project outward and fill the area.

IP Rating:

Ingress Protection rating of IP66 for dust and water

Ambient Temperature:

SuitableFor use in 40°C (104°F) ambient temperatures.

Cold Weather Starting:

Minimum starting temperature is -40°C (-40°F)

Thermal Management:

Superior thermal management design with external Air-Flow fins provides maximum operational life, even in high ambient temperature environments.

Effective Projected Area:

EPA = 0.75

Housing:

Die cast aluminum housing, lens frame and mounting arm.

Mounting:

Heavy-duty mounting arm with "O" ring seal & stainless steel screws.

Reflector:

Specular vacuum-metallized polycarbonate

Gaskets:

High temperature silicone gaskets

Finish:

Formulated for high-durability and long lasting color.

Green Technology:

Mercury and UV free. RoHS compliant components. Polyester powder coat finish formulated without the use of VOC or toxic heavy metals.

Other

Patents:

The ALED™ design is protected by patents pending in the U.S., Canada, China, Taiwan and Mexico.

Copyright © 2018 RAB Lighting Inc. All Rights Reserved Note: Specifications are subject to change at any time without notice

Technical Specifications (continued)

Other

Warranty:

RAB warrants that our LED products will be free from defects in materials and workmanship for a period of five (5) years from the date of delivery to the end user, including coverage of light output, color stability, driver performance and fixture finish.

Equivalency:

Replaces 200W Metal Halide.

Buy American Act Compliance:

RAB values USA manufacturing! Upon request, RAB may be able to manufacture this product to be compliant with the Buy American Act (BAA). Please contact customer service to request a quote for the product to be made BAA compliant.

Optical

BUG Rating:

B1 U0 G2

Dimensions

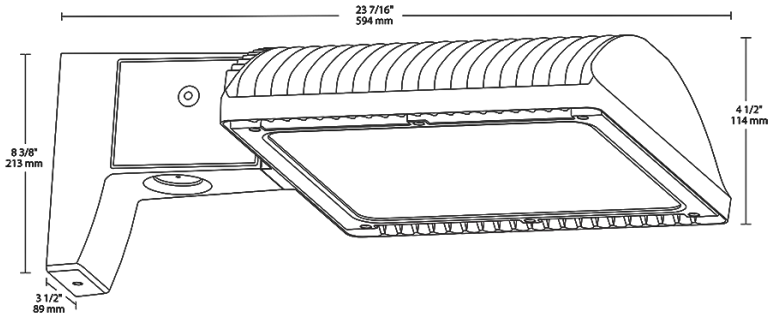

Features

- 66% energy cost savings vs. HID
- 100,000-hour LED lifespan
- Type III distribution
- 5-year warranty

Ordering Matrix

Family	Distribution	Wattage	Mounting	Color Temp	Finish	Voltage	Dimming	Control Options
ALED	3T	50						/PCT
	2T = Type II **3T** = Type III **4T** = Type IV	**50** = 50W **78** = 78W **105** = 105W **125** = 125W **150** = 150W	**Blank** = Arm **SF** = Slipfitter	**Blank** = 5000K (Cool) **N** = 4000K (Neutral) **Y** = 3000K (Warm)	**Blank** = Bronze **RG** = Roadway Gray **W** = White	**Blank** = 120-277V **/480** = 480V (not available for 150W)	**Blank** = Standard **/D10** = 0-10V Dimming **/BL** = Bi-Level	**Blank** = No Option **/PCS** = 120V Swivel Photocell **/PCS2** = 277V Swivel Photocell **/PCT** = 120-277V Twistlock Photocell (not available for Slipfitter mounting) **/PCT4** = 480V Twistlock Photocell (not available for Slipfitter mounting) **/WS2** = Multi-Level Motion Sensor(50W, 78W and 105W only) **/WS4** = Multi-Level Motion Sensor(125W and 150W only) **/LC** = Lightcloud® Control

Copyright © 2018 RAB Lighting Inc. All Rights Reserved Note: Specifications are subject to change at any time without notice

ALED3T78/PCT



Specification grade area lights available in IES Type III distributions. For use for roadway, general parking and other area lighting applications where a larger pool of lighting is required. Patent pending thermal management system. 5 Year Warranty.

Color: Bronze Weight: 30.4 lbs

Project:	Type:
Prepared By:	Date:

Driver Info		LED Info	
Type:	Constant Current	Watts:	78W
120V:	0.66A	Color Temp:	5000K
208V:	0.41A	Color Accuracy:	71 CRI
240V:	0.35A	L70 Lifespan:	100000
277V:	0.30A	Lumens:	9263
Input Watts:	77W	Efficacy:	121 LPW
Efficiency:	N/A		

Technical Specifications

Electrical

Photocell:

120-277V twistlock photocell included. Photocell is compatible with 120-277V.

Driver:

Constant Current, Class 2, 2000mA, 100-277V, 50-60Hz, 1.1A, Power Factor 99%

THD:

5.3% at 120V, 13.3% at 277V

Surge Protection:

4kV

Surge Protector:

ALED78 is available with a 6kV surge protector (SP6). SP6 available .

Listings

DLC Listed:

This product is on the Design Lights Consortium (DLC) Qualified Products List and is eligible for rebates from DLC Member Utilities.
DLC Product Code: P0000179S

UL Listing:

Suitable for wet locations as a downlight.

IESNA LM-79 & IESNA LM-80 Testing:

RAB LED luminaires have been tested by an independent laboratory in accordance with IESNA LM-79 and 80, and have received the Department of Energy "Lighting Facts" label.

Dark Sky Approved:

The International Dark Sky Association has approved this product as a full cutoff, fully shielded luminaire.

LED Characteristics

Lifespan:

100,000-hour LED lifespan based on IES LM-80 results and TM-21 calculations.

LEDs:

Six (6) multi-chip, 13W, high-output, long-life LEDs.

Color Consistency:

3-step MacAdam Ellipse binning to achieve consistent fixture-to-fixture color.

Color Stability:

LED color temperature is warrantied to shift no more than 200K in CCT over a 5 year period.

Color Uniformity:

RAB's range of CCT (Correlated Color Temperature) follows the guidelines of the American National Standard for Specifications for the Chromaticity of Solid State Lighting (SSL) Products, ANSI C78.377-2017.

Construction

IES Classification:

The Type III distribution is ideal for roadway, general parking and other area lighting applications where a larger pool of lighting is required. It is intended to be located near the side of the area, allowing the light to project outward and fill the area.

IP Rating:

Ingress Protection rating of IP66 for dust and water

Ambient Temperature:

SuitableFor use in 40°C (104°F) ambient temperatures.

Cold Weather Starting:

Minimum starting temperature is -40°C (-40°F)

Thermal Management:

Superior heat sinking with external Air-Flow fins.

Effective Projected Area:

EPA = 0.75

Lens:

Tempered glass lens.

Housing:

Die cast aluminum housing, lens frame and mounting arm.

Mounting:

Universal mounting arm compatible for hole spacing patterns from 1" to 5 1/2" center to center. Round Pole Adaptor plate included as a standard. Easy slide and lock to mount fixture with ease.

Reflector:

Specular vacuum-metallized polycarbonate

Gaskets:

High temperature silicone gaskets.

Finish:

Formulated for high-durability and long lasting color.

Copyright © 2018 RAB Lighting Inc. All Rights Reserved Note: Specifications are subject to change at any time without notice

Technical Specifications (continued)

Construction

Green Technology:

Mercury and UV free. RoHS compliant components. Polyester powder coat finish formulated without the use of VOC or toxic heavy metals.

For use on LEED Buildings:

IDA Dark Sky Approval means that this fixture can be used to achieve LEED Credits for Light Pollution Reduction.

Other

Compatibility:

Compatible with Round Poles with a diameter of 2.5" to 6"

Warranty:

RAB warrants that our LED products will be free from defects in materials and workmanship for a period of five (5) years from the date of delivery to the end user, including coverage of light output, color stability, driver performance and fixture finish.

Patents:

The ALED design is protected by patents in the U.S. Pat. 668,370, Canada Pat. 144956, China ZL201230100154.X, and Mexico Pat. 38423. Pending patents in Taiwan.

Replacement:

Replaces 250W Metal Halide.

Buy American Act Compliance:

RAB values USA manufacturing! Upon request, RAB may be able to manufacture this product to be compliant with the Buy American Act (BAA). Please contact customer service to request a quote for the product to be made BAA compliant.

Optical

BUG Rating:

B1 U0 G2

Dimensions

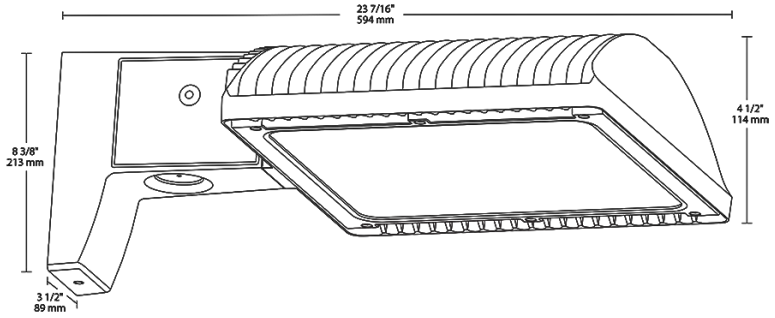

Features

- 66% energy cost savings vs. HID
- 100,000-hour LED lifespan
- Type III distribution
- 5-year warranty

Ordering Matrix

Family	Optics	Wattage	Mounting	Color Temp	Finish	Driver Options	Photocell Options
ALED	3T	78					
	2T = Type II **3T** = Type III **4T** = Type IV	**50** = 50W **78** = 78W **105** = 105W **125** = 125W **150** = 150W	**Blank** = Pole mount **SF** = Slipfitter	**Blank** = 5000K (Cool) **N** = 4000K (Neutral) **Y** = 3000K (Warm)	**Blank** = Bronze **RG** = Roadway Gray **W** = White	**Blank** = 120-277V **/480** = 480V (not available for 150W) **/BL** = Bi-Level **/D10** = 0-10V Dimming	**Blank** = No Option **/PC** = 120V Button Photocell (Pole mount models only) **/PC2** = 277V Button Photocell (Pole mount models only) **/PCT** = 120-277V Twistlock Photocell (Pole mount models only) **/PCT4** = 480V Twistlock Photocell (Pole mount models only) **/PCS** = 120V Swivel Photocell **/PCS2** = 277V Swivel Photocell **/PCS4** = 480V Swivel Photocell **/WS2** = Multi-Level Motion Sensor 20 ft. (Only available 0-10V dimming models) **/WS4** = Multi-Level Motion Sensor 40 ft. (Only available 0-10V dimming models)

Copyright © 2018 RAB Lighting Inc. All Rights Reserved Note: Specifications are subject to change at any time without notice

ALED3T125/PCT



Specification grade area lights available in IES Type III distributions. For use for roadway, general parking and other area lighting applications where a larger pool of lighting is required. Patent pending thermal management system. 5 Year Warranty.

Color: Bronze Weight: 32.0 lbs

Project:	Type:
Prepared By:	Date:

Driver Info

Type:	Constant Current
120V:	1.12A
208V:	0.70A
240V:	0.61A
277V:	0.52A
Input Watts:	134W
Efficiency:	93%

LED Info

Watts:	125W
Color Temp:	5000K
Color Accuracy:	70 CRI
L70 Lifespan:	100000
Lumens:	14891
Efficacy:	111 LPW

Technical Specifications

Electrical

Photocell:

120-277V twistlock photocell included. Photocell is compatible with 120-277V.

Drivers:

Two Drivers, Constant Current, Class 2, 1750mA, 100-277V, 50/60Hz, 1.1A, Power Factor 99%

THD:

5.5% at 120V, 15.6% at 277V

Surge Protection:

4kV

Listings

DLC Listed:

This product is on the Design Lights Consortium (DLC) Qualified Products List and is eligible for rebates from DLC Member Utilities.
DLC Product Code: P0000177M

UL Listing:

Suitable for wet locations.

IESNA LM-79 & LM-80 Testing:

RAB LED luminaries have been tested by an independent laboratory in accordance with IESNA LM-79 and LM-80, and have been received the Department of Energy "Lighting Facts" label.

Dark Sky Approved:

The International Dark Sky Association has approved this product as a full cutoff, fully shielded luminaire.

LED Characteristics

Lifespan:

100,000-hour LED lifespan based on IES LM-80 results and TM-21 calculations.

LEDs:

Multi-chip, high-output, long-life LEDs

Color Stability:

LED color temperature is warrantied to shift no more than 200K in CCT over a 5 year period.

Color Uniformity:

RAB's range of CCT (Correlated Color Temperature) follows the guidelines of the American National Standard for Specifications for the Chromaticity of Solid State Lighting (SSL) Products, ANSI C78.377-2017.

Construction

IES Classification:

The Type III distribution is ideal for roadway, general parking and other area lighting applications where a larger pool of lighting is required. It is intended to be located near the side of the area, allowing the light to project outward and fill the area.

Effective Projected Area:

EPA = 0.75

Maximum Ambient Temperature:

Suitable for use in 40°C (104°F) ambient temperatures

Cold Weather Starting:

Minimum starting temperature is -40°C (-40°F)

Thermal Management:

Superior thermal management with external "Air-Flow" fins.

Lens:

Tempered glass lens.

Housing:

Die-cast aluminum housing, lens frame and mounting arm.

Mounting:

Universal mounting arm compatible for hole spacing patterns from 1" to 5 1/2" center to center. Round Pole Adaptor plate included as a standard. Easy slide and lock to mount fixture with ease.

Reflector:

Specular vacuum-metallized polycarbonate

Gaskets:

High-temperature silicone gaskets

IP Rating:

Ingress Protection rating of IP66 for dust and water

Finish:

Formulated for high-durability and long lasting color.

Green Technology:

Mercury and UV free. RoHS compliant components. Polyester powder coat finish formulated without the use of VOC or toxic heavy metals.

For use on LEED Buildings:

IDA Dark Sky Approval means that this fixture can be used to achieve LEED Credits for Light Pollution Reduction.

Copyright © 2018 RAB Lighting Inc. All Rights Reserved Note: Specifications are subject to change at any time without notice

Technical Specifications (continued)

Other

Compatibility:

Compatible with Round Poles with a diameter of 2.5" to 6"

Warranty:

RAB warrants that our LED products will be free from defects in materials and workmanship for a period of five (5) years from the date of delivery to the end user, including coverage of light output, color stability, driver performance and fixture finish.

Replacement:

Replaces 320W Metal Halide.

Buy American Act Compliance:

RAB values USA manufacturing! Upon request, RAB may be able to manufacture this product to be compliant with the Buy American Act (BAA). Please contact customer service to request a quote for the product to be made BAA compliant.

Optical

BUG Rating:

B1 U0 G2

Dimensions

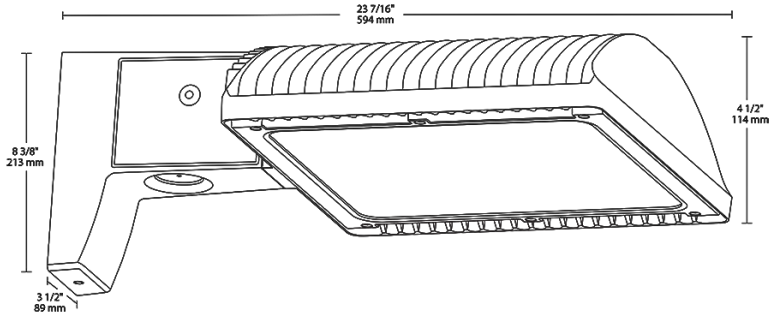

Features

- 66% energy cost savings vs. HID
- 100,000-hour LED lifespan
- Type III distribution
- 5-year warranty

Ordering Matrix

Family	Optics	Wattage	Mounting	Color Temp	Finish	Driver Options	Photocell Options
ALED	3T	125					
	2T = Type II **3T** = Type III **4T** = Type IV	**50** = 50W **78** = 78W **105** = 105W **125** = 125W **150** = 150W	**Blank** = Pole mount **SF** = Slipfitter	**Blank** = 5000K (Cool) **N** = 4000K (Neutral) **Y** = 3000K (Warm)	**Blank** = Bronze **RG** = Roadway Gray **W** = White	**Blank** = 120-277V **/480** = 480V (not available for 150W) **/BL** = Bi-Level **/D10** = 0-10V Dimming	**Blank** = No Option **/PC** = 120V Button Photocell (Pole mount models only) **/PC2** = 277V Button Photocell (Pole mount models only) **/PCT** = 120-277V Twistlock Photocell (Pole mount models only) **/PCT4** = 480V Twistlock Photocell (Pole mount models only) **/PCS** = 120V Swivel Photocell **/PCS2** = 277V Swivel Photocell **/PCS4** = 480V Swivel Photocell **/WS2** = Multi-Level Motion Sensor 20 ft. (Only available 0-10V dimming models) **/WS4** = Multi-Level Motion Sensor 40 ft. (Only available 0-10V dimming models)

Copyright © 2018 RAB Lighting Inc. All Rights Reserved Note: Specifications are subject to change at any time without notice

ALED3T125W/PCT



Specification grade area lights available in IES Type III distributions. For use for roadway, general parking and other area lighting applications where a larger pool of lighting is required. Patent pending thermal management system. 5 Year Warranty.

Color: White Weight: 32.0 lbs

Project:	Type:
Prepared By:	Date:

Driver Info

Type:	Constant Current
120V:	1.12A
208V:	0.70A
240V:	0.61A
277V:	0.52A
Input Watts:	134W
Efficiency:	93%

LED Info

Watts:	125W
Color Temp:	5000K
Color Accuracy:	70 CRI
L70 Lifespan:	100000
Lumens:	14891
Efficacy:	111 LPW

Technical Specifications

Electrical

Photocell:

120-277V twistlock photocell included. Photocell is compatible with 120-277V.

Drivers:

Two Drivers, Constant Current, Class 2, 1750mA, 100-277V, 50/60Hz, 1.1A, Power Factor 99%

THD:

5.5% at 120V, 15.6% at 277V

Surge Protection:

4kV

Listings

DLC Listed:

This product is on the Design Lights Consortium (DLC) Qualified Products List and is eligible for rebates from DLC Member Utilities.
DLC Product Code: P0000177M

UL Listing:

Suitable for wet locations.

IESNA LM-79 & LM-80 Testing:

RAB LED luminaries have been tested by an independent laboratory in accordance with IESNA LM-79 and LM-80, and have been received the Department of Energy "Lighting Facts" label.

Dark Sky Approved:

The International Dark Sky Association has approved this product as a full cutoff, fully shielded luminaire.

LED Characteristics

Lifespan:

100,000-hour LED lifespan based on IES LM-80 results and TM-21 calculations.

LEDs:

Multi-chip, high-output, long-life LEDs

Color Stability:

LED color temperature is warrantied to shift no more than 200K in CCT over a 5 year period.

Color Uniformity:

RAB's range of CCT (Correlated Color Temperature) follows the guidelines of the American National Standard for Specifications for the Chromaticity of Solid State Lighting (SSL) Products, ANSI C78.377-2017.

Construction

IES Classification:

The Type III distribution is ideal for roadway, general parking and other area lighting applications where a larger pool of lighting is required. It is intended to be located near the side of the area, allowing the light to project outward and fill the area.

Effective Projected Area:

EPA = 0.75

Maximum Ambient Temperature:

Suitable for use in 40°C (104°F) ambient temperatures

Cold Weather Starting:

Minimum starting temperature is -40°C (-40°F)

Thermal Management:

Superior thermal management with external "Air-Flow" fins.

Lens:

Tempered glass lens.

Housing:

Die-cast aluminum housing, lens frame and mounting arm.

Mounting:

Universal mounting arm compatible for hole spacing patterns from 1" to 5 1/2" center to center. Round Pole Adaptor plate included as a standard. Easy slide and lock to mount fixture with ease.

Reflector:

Specular vacuum-metallized polycarbonate

Gaskets:

High-temperature silicone gaskets

IP Rating:

Ingress Protection rating of IP66 for dust and water

Finish:

Formulated for high-durability and long lasting color.

Green Technology:

Mercury and UV free. RoHS compliant components. Polyester powder coat finish formulated without the use of VOC or toxic heavy metals.

For use on LEED Buildings:

IDA Dark Sky Approval means that this fixture can be used to achieve LEED Credits for Light Pollution Reduction.

Copyright © 2018 RAB Lighting Inc. All Rights Reserved Note: Specifications are subject to change at any time without notice

Technical Specifications (continued)

Other

Compatibility:

Compatible with Round Poles with a diameter of 2.5" to 6"

Warranty:

RAB warrants that our LED products will be free from defects in materials and workmanship for a period of five (5) years from the date of delivery to the end user, including coverage of light output, color stability, driver performance and fixture finish.

Replacement:

Replaces 320W Metal Halide.

Buy American Act Compliance:

RAB values USA manufacturing! Upon request, RAB may be able to manufacture this product to be compliant with the Buy American Act (BAA). Please contact customer service to request a quote for the product to be made BAA compliant.

Optical

BUG Rating:

B1 U0 G2

Dimensions

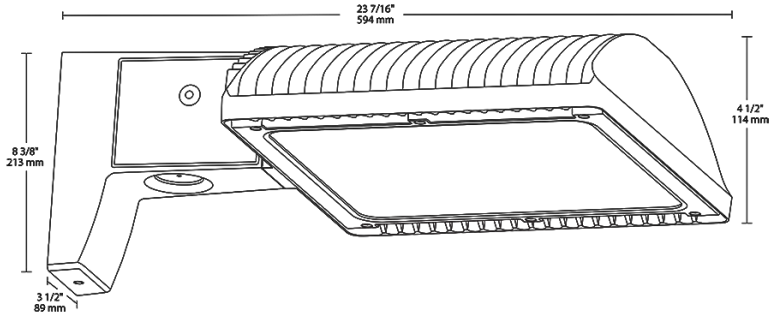

Features

- 66% energy cost savings vs. HID
- 100,000-hour LED lifespan
- Type III distribution
- 5-year warranty

Ordering Matrix

Family	Optics	Wattage	Mounting	Color Temp	Finish	Driver Options	Photocell Options
ALED	3T	125			W		
	2T = Type II **3T** = Type III **4T** = Type IV	**50** = 50W **78** = 78W **105** = 105W **125** = 125W **150** = 150W	**Blank** = Pole mount **SF** = Slipfitter	**Blank** = 5000K (Cool) **N** = 4000K (Neutral) **Y** = 3000K (Warm)	**Blank** = Bronze **RG** = Roadway Gray **W** = White	**Blank** = 120-277V **/480** = 480V (not available for 150W) **/BL** = Bi-Level **/D10** = 0-10V Dimming	**Blank** = No Option **/PC** = 120V Button Photocell (Pole mount models only) **/PC2** = 277V Button Photocell (Pole mount models only) **/PCT** = 120-277V Twistlock Photocell (Pole mount models only) **/PCT4** = 480V Twistlock Photocell (Pole mount models only) **/PCS** = 120V Swivel Photocell **/PCS2** = 277V Swivel Photocell **/PCS4** = 480V Swivel Photocell **/WS2** = Multi-Level Motion Sensor 20 ft. (Only available 0-10V dimming models) **/WS4** = Multi-Level Motion Sensor 40 ft. (Only available 0-10V dimming models)

Copyright © 2018 RAB Lighting Inc. All Rights Reserved Note: Specifications are subject to change at any time without notice

ALED3T150/PCT



Specification grade area lights available in IES Type III distributions. For use for roadway, general parking and other area lighting applications where a larger pool of lighting is required. Patent pending thermal management system. 5 Year Warranty.

Color: Bronze Weight: 32.0 lbs

Project:	Type:
Prepared By:	Date:

Driver Info		LED Info	
Type:	Constant Current	Watts:	150W
120V:	1.31A	Color Temp:	5000K
208V:	0.80A	Color Accuracy:	71 CRI
240V:	0.69A	L70 Lifespan:	100000
277V:	0.60A	Lumens:	16839
Input Watts:	155W	Efficacy:	108 LPW
Efficiency:	97%		

Technical Specifications

Electrical

Photocell:

120-277V twistlock photocell included. Photocell is compatible with 120-277V.

Drivers:

Two Drivers, Constant Current, Class 2, 2000mA, 100-277V, 50-60Hz, Power Factor 99%

Surge Protection:

4kV

Listings

DLC Listed:

This product is on the Design Lights Consortium (DLC) Qualified Products List and is eligible for rebates from DLC Member Utilities.
DLC Product Code: P0000175C

UL Listing:

Suitable for wet locations.

IESNA LM-79 & LM-80 Testing:

RAB LED luminaries have been tested by an independent laboratory in accordance with IESNA LM-79 and LM-80, and have been received the Department of Energy "Lighting Facts" label.

Dark Sky Approved:

The International Dark Sky Association has approved this product as a full cutoff, fully shielded luminaire.

LED Characteristics

Lifespan:

100,000-hour LED lifespan based on IES LM-80 results and TM-21 calculations.

LEDs:

Multi-chip, high-output, long-life LEDs

Color Consistency:

7-step MacAdam Ellipse binning to achieve consistent fixture-to-fixture color.

Color Stability:

LED color temperature is warrantied to shift no more than 200K in CCT over a 5 year period.

Color Uniformity:

RAB's range of CCT (Correlated Color Temperature) follows the guidelines of the American National Standard for Specifications for the Chromaticity of Solid State Lighting (SSL) Products, ANSI C78.377-2017.

Construction

Effective Projected Area:

EPA = 0.75

Maximum Ambient Temperature:

Suitable for use in 40°C (104°F) ambient temperatures

Cold Weather Starting:

Minimum starting temperature is -40°C (-40°F)

Thermal Management:

Superior thermal management with external "Air-Flow" fins.

Lens:

Tempered glass lens.

Housing:

Die-cast aluminum housing, lens frame and mounting arm.

IP Rating:

Ingress Protection rating of IP66 for dust and water

Mounting:

Universal mounting arm compatible for hole spacing patterns from 1" to 5 1/2" center to center. Round Pole Adaptor plate included as a standard. Easy slide and lock to mount fixture with ease.

Reflector:

Specular vacuum-metallized polycarbonate

Gaskets:

High-temperature silicone gaskets

Finish:

Formulated for high-durability and long lasting color.

Green Technology:

Mercury and UV free. RoHS compliant components. Polyester powder coat finish formulated without the use of VOC or toxic heavy metals.

For use on LEED Buildings:

IDA Dark Sky Approval means that this fixture can be used to achieve LEED Credits for Light Pollution Reduction.

Other

Compatibility:

Compatible with Round Poles with a diameter of 2.5" to 6"

Copyright © 2018 RAB Lighting Inc. All Rights Reserved Note: Specifications are subject to change at any time without notice

Technical Specifications (continued)

Other

Warranty:

RAB warrants that our LED products will be free from defects in materials and workmanship for a period of five (5) years from the date of delivery to the end user, including coverage of light output, color stability, driver performance and fixture finish.

Replacement:

Replaces 400W Metal Halide

Buy American Act Compliance:

RAB values USA manufacturing! Upon request, RAB may be able to manufacture this product to be compliant with the Buy American Act (BAA). Please contact customer service to request a quote for the product to be made BAA compliant.

Optical

BUG Rating:

B1 U0 G2

Dimensions

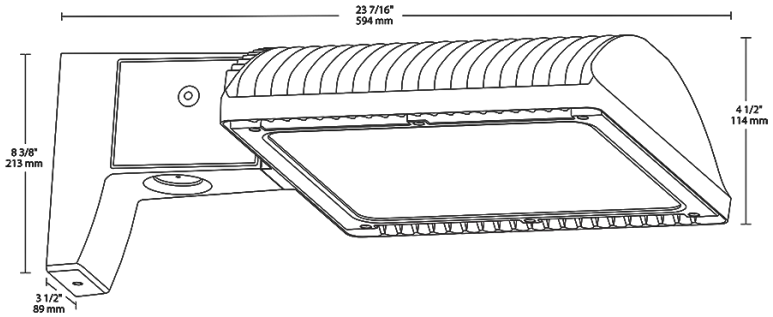

Features

- 66% energy cost savings vs. HID
- 100,000-hour LED lifespan
- Type III distribution
- 5-year warranty

Ordering Matrix

Family	Optics	Wattage	Mounting	Color Temp	Finish	Driver Options	Photocell Options
ALED	3T	150					
	2T = Type II **3T** = Type III **4T** = Type IV	**50** = 50W **78** = 78W **105** = 105W **125** = 125W **150** = 150W	**Blank** = Pole mount **SF** = Slipfitter	**Blank** = 5000K (Cool) **N** = 4000K (Neutral) **Y** = 3000K (Warm)	**Blank** = Bronze **RG** = Roadway Gray **W** = White	**Blank** = 120-277V **/480** = 480V (not available for 150W) **/BL** = Bi-Level **/D10** = 0-10V Dimming	**Blank** = No Option **/PC** = 120V Button Photocell (Pole mount models only) **/PC2** = 277V Button Photocell (Pole mount models only) **/PCT** = 120-277V Twistlock Photocell (Pole mount models only) **/PCT4** = 480V Twistlock Photocell (Pole mount models only) **/PCS** = 120V Swivel Photocell **/PCS2** = 277V Swivel Photocell **/PCS4** = 480V Swivel Photocell **/WS2** = Multi-Level Motion Sensor 20 ft. (Only available 0-10V dimming models) **/WS4** = Multi-Level Motion Sensor 40 ft. (Only available 0-10V dimming models)

Copyright © 2018 RAB Lighting Inc. All Rights Reserved Note: Specifications are subject to change at any time without notice

ALED5T26/PCT



High output LED pole top area light with IES type V circular distribution. Wide and uniform 360 degree pattern ideal for large outdoor areas such as parking lots, corporate parks, and retail settings.

Color: Bronze Weight: 21.8 lbs

Project:	Type:
Prepared By:	Date:

Driver Info		LED Info	
Type:	Constant Current	Watts:	26W
120V:	0.30A	Color Temp:	5000K
208V:	0.17A	Color Accuracy:	68 CRI
240V:	0.15A	L70 Lifespan:	100000
277V:	0.13A	Lumens:	3022
Input Watts:	27W	Efficacy:	112 LPW
Efficiency:	96%		

Technical Specifications

Listings

UL Listing:

Suitable for wet locations.

DLC Listed:

This product is listed by Design Lights Consortium (DLC) as an ultra-efficient premium product that qualifies for the highest tier of rebates from DLC Member Utilities.
DLC Product Code: P38EH342

IESNA LM-79 & LM-80 Testing:

RAB LED luminaires have been tested by an independent laboratory in accordance with IESNA LM-79 and LM-80, and have received the Department of Energy "Lighting Facts" label.

Electrical

THD:

7.7% at 120V, 17.4% at 277V

Power Factor:

99.1% at 120V, 89.9% at 277V

Photocell:

120-277V twistlock photocell included. Photocell is compatible with 120V - 277V.

LED Characteristics

LEDs:

High-output, long-life LEDs.

Lifespan:

100,000-hour LED lifespan based on IES LM-80 results and TM-21 calculations.

Color Consistency:

7-step MacAdam Ellipse binning to achieve consistent fixture-to-fixture color.

Color Stability:

LED color temperature is warrantied to shift no more than 200K in CCT over a 5 year period.

Color Uniformity:

RAB's range of CCT (Correlated Color Temperature) follows the guidelines of the American National Standard for Specifications for the Chromaticity of Solid State Lighting (SSL) Products, ANSI C78.377-2017.

Construction

Cold Weather Starting:

Minimum starting temperature is -40°C (-40°F)

Maximum Ambient Temperature:

Suitable for use in 40°C (104°F) ambient temperatures

Effective Projected Area:

EPA = 1.2

Thermal Management:

Superior thermal management with external air-flow fins

Housing:

Precision die-cast aluminum, Type V distribution.

Support Arms:

Extruded aluminum.

Lens:

Clear tempered glass lens

Reflector:

Specular vacuum-metallized polycarbonate, Type V distribution.

Gaskets:

High-temperature silicone

Finish:

Formulated for high-durability and long lasting color.

Green Technology:

Mercury and UV free. RoHS compliant components. Polyester powder coat finish formulated without the use of VOC or toxic heavy metals.

Other

Patents:

The designs of the ALED5T52 are protected by patents pending in US, Canada, China, Taiwan and Mexico.

Buy American Act Compliance:

RAB values USA manufacturing! Upon request, RAB may be able to manufacture this product to be compliant with the Buy American Act (BAA). Please contact customer service to request a quote for the product to be made BAA compliant.

Optical

BUG Rating:

B2 U1 G1

Copyright © 2018 RAB Lighting Inc. All Rights Reserved Note: Specifications are subject to change at any time without notice

ALED5T26/PCT

Dimensions

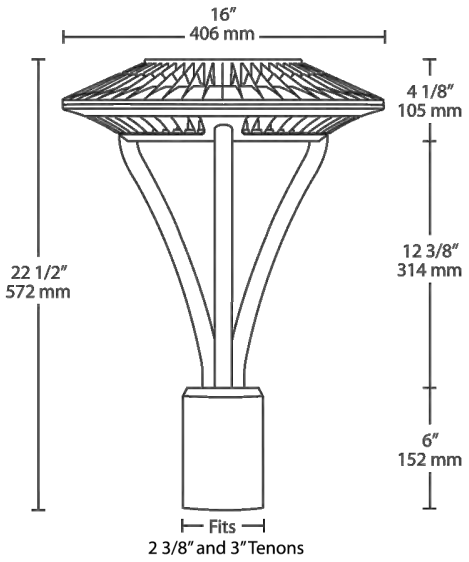

Features

- IES type V (circular) distribution
- 100,000-hour LED lifespan
- Compatible with standard 2 3/8" and 3" tenons
- Air-flow fins for maximum heat dissipation
- 5-year warranty

Ordering Matrix

Family	Distribution	Wattage	Color Temp	Finish	Driver Option	Options
ALED	5T	26				/PCT
	5T = Type V	**78** = 78W **52** = 52W **26** = 26W	**Blank** = 5000K (Cool) **N** = 4000K (Neutral) **Y** = 3000K (Warm)	**Blank** = Bronze **W** = White	**Blank** = 120-277V **/D10** = Dimmable **/BL** = Bi-Level **/480** = 480V **/480/D10** = 480V w/ Dimmable	**Blank** = No Option **/PCT** = 120-277V Twistlock Photocell **/PCT4** = 480V Twistlock Photocell

Copyright © 2018 RAB Lighting Inc. All Rights Reserved Note: Specifications are subject to change at any time without notice

ALED5T52/PCT



High output LED pole top area light with IES type V circular distribution. Wide and uniform 360 degree pattern ideal for large outdoor areas such as parking lots, corporate parks, and retail settings.

Color: Bronze Weight: 21.8 lbs

Project:	Type:
Prepared By:	Date:

Driver Info		LED Info	
Type:	Constant Current	Watts:	52W
120V:	0.49A	Color Temp:	5000K
208V:	0.31A	Color Accuracy:	73 CRI
240V:	0.27A	L70 Lifespan:	100000
277V:	0.24A	Lumens:	5753
Input Watts:	55W	Efficacy:	105 LPW
Efficiency:	95%		

Technical Specifications

Listings

UL Listing:

Suitable for wet locations.

DLC Listed:

This product is on the Design Lights Consortium (DLC) Qualified Products List and is eligible for rebates from DLC Member Utilities.
DLC Product Code: P00001706

IESNA LM-79 & LM-80 Testing:

RAB LED luminaires have been tested by an independent laboratory in accordance with IESNA LM-79 and LM-80, and have received the Department of Energy "Lighting Facts" label.

Electrical

THD:

7.2% at 120V, 17% at 277V

Power Factor:

99.1% at 120V, 90.2% at 277V

Photocell:

120-277V twistlock photocell included. Photocell is compatible with 120V - 277V.

LED Characteristics

LEDs:

4x13W high-output, long-life LEDs.

Lifespan:

100,000-hour LED lifespan based on IES LM-80 results and TM-21 calculations.

Color Consistency:

7-step MacAdam Ellipse binning to achieve consistent fixture-to-fixture color.

Color Stability:

LED color temperature is warrantied to shift no more than 200K in CCT over a 5 year period.

Color Uniformity:

RAB's range of CCT (Correlated Color Temperature) follows the guidelines of the American National Standard for Specifications for the Chromaticity of Solid State Lighting (SSL) Products, ANSI C78.377-2017.

Construction

Cold Weather Starting:

Minimum starting temperature is -40°C (-40°F)

Maximum Ambient Temperature:

Suitable for use in 40°C (104°F) ambient temperatures

Effective Projected Area:

EPA = 1.2

Thermal Management:

Superior thermal management with external air-flow fins

Housing:

Precision die-cast aluminum, Type V distribution.

Support Arms:

Extruded aluminum.

Lens:

Clear tempered glass lens

Reflector:

Specular vacuum-metallized polycarbonate, Type V distribution.

Gaskets:

High-temperature silicone

Finish:

Formulated for high-durability and long lasting color.

Green Technology:

Mercury and UV free. RoHS compliant components. Polyester powder coat finish formulated without the use of VOC or toxic heavy metals.

Other

Patents:

The designs of the ALED5T52 are protected by patents pending in US, Canada, China, Taiwan and Mexico.

Buy American Act Compliance:

RAB values USA manufacturing! Upon request, RAB may be able to manufacture this product to be compliant with the Buy American Act (BAA). Please contact customer service to request a quote for the product to be made BAA compliant.

Optical

BUG Rating:

B3 U1 G1

Copyright © 2018 RAB Lighting Inc. All Rights Reserved Note: Specifications are subject to change at any time without notice

ALED5T52/PCT

Dimensions

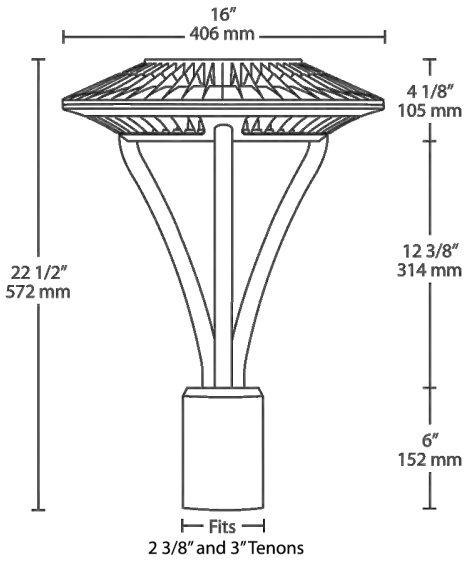

Features

- IES type V (circular) distribution
- 100,000-hour LED lifespan
- Compatible with standard 2 3/8" and 3" tenons
- Air-flow fins for maximum heat dissipation
- 5-year warranty

Ordering Matrix

Family	Distribution	Wattage	Color Temp	Finish	Driver Option	Options
ALED	5T	52				/PCT
	5T = Type V	**78** = 78W **52** = 52W **26** = 26W	**Blank** = 5000K (Cool) **N** = 4000K (Neutral) **Y** = 3000K (Warm)	**Blank** = Bronze **W** = White	**Blank** = 120-277V **/D10** = Dimmable **/BL** = Bi-Level **/480** = 480V **/480/D10** = 480V w/ Dimmable	**Blank** = No Option **/PCT** = 120-277V Twistlock Photocell **/PCT4** = 480V Twistlock Photocell

Copyright © 2018 RAB Lighting Inc. All Rights Reserved Note: Specifications are subject to change at any time without notice

BLEDR12



LED bollard with architectural quality and strength at an affordable price point. Cylindrical post with round head. Available in 12, 18 and 24 Watt versions that provide 90, 180, 270 and 360 degree lighting patterns.

Color: Bronze Weight: 18.6 lbs

Project:	Type:
Prepared By:	Date:

Driver Info		LED Info	
Type:	Constant Current	Watts:	12W
120V:	0.13A	Color Temp:	5100K
208V:	0.09A	Color Accuracy:	69 CRI
240V:	0.08A	L70 Lifespan:	100000
277V:	0.07A	Lumens:	828
Input Watts:	16W	Efficacy:	52 LPW
Efficiency:	75%		

Technical Specifications

Listings

UL Listing:

Suitable for wet locations.

IESNA LM-79 & IESNA LM-80 Testing:

RAB LED fixtures have been tested by an independent laboratory in accordance with IESNA LM-79 and 80, and have received the Department of Energy "Lighting Facts" label.

LED Characteristics

LEDs:

6W multi-chip, long-life LEDs

Lifespan:

100,000-hour LED lifespan based on IES LM-80 results and TM-21 calculations

Color Consistency:

7-step MacAdam Ellipse binning to achieve consistent fixture-to-fixture color.

Color Stability:

LED color temperature is warrantied to shift no more than 200K in CCT over a 5 year period.

Color Uniformity:

RAB's range of CCT (Correlated Color Temperature) follows the guidelines of the American National Standard for Specifications for the Chromaticity of Solid State Lighting (SSL) Products, ANSI C78.377-2017

Electrical

Driver:

Constant Current, Class2, 100-277V, 50/60 Hz, 4kV Surge Protection, 700mA, 120V: 0.13A, 208V: 0.09A, 240V: 0.08A, 277V: 0.07A

THD:

11.2% at 120V

Construction

Ambient Temperature:

SuitableFor use in 40°C (104°F) ambient temperatures.

Cold Weather Starting:

Minimum starting temperature is -40°C (-40°F)

Thermal Management:

Cast aluminum Thermal Management system for optimal heat sinking. The BLED is designed for cool operation, maximum efficiency and long life by minimizing LED junction temperature.

Housing:

Die-cast aluminum with extruded aluminum post

Lens:

Clear, vandal-resistant polycarbonate

Mounting:

Four (4) anchor bolts provided for concrete pad mounting. Internal base support has leveling screws.

Reflector:

Specular polycarbonate

Gaskets:

High-temperature silicone gaskets seal out moisture gaskets seal out moisture

Gaskets:

High-temperature silicone gaskets seal out moisture

Anchor Bolt:

Anchor Bolt Dimension is available .

Finish:

Our environmentally friendly polyester powder coatings are formulated for high-durability and long-lasting color.

Green Technology:

Mercury and UV free. RoHS compliant components. Polyester powder coat finish formulated without the use of VOC or toxic heavy metals.

Other

Patents:

The design of BLED is protected by patents in US, Canada & China.

Warranty:

RAB warrants that our LED products will be free from defects in materials and workmanship for a period of five (5) years from the date of delivery to the end user, including coverage of light output, color stability, driver performance and fixture finish. See our full warranty .

Buy American Act Compliance:

RAB values USA manufacturing! Upon request, RAB may be able to manufacture this product to be compliant with the Buy American Act (BAA). Please contact customer service to request a quote for the product to be made BAA compliant.

Optical

BUG Rating:

B1 U1 G1

Copyright © 2018 RAB Lighting Inc. All Rights Reserved Note: Specifications are subject to change at any time without notice

BLEDR12

Dimensions

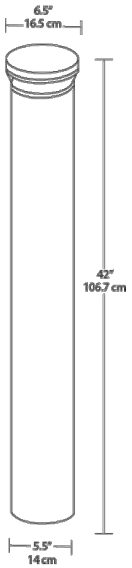

Features

- Patent-pending base mount design for super sturdy installation
- Durable construction and vandal-resistant polycarbonate lens
- 3 configurations to provide 360°, 270°, 180° or 90° lighting pattern
- Precision-engineered optics deliver maximum downward lighting w/o glare
- Four leveling screws provided for easy installation
- 100,000-hour LED lifespan

Ordering Matrix

Family	Wattage	Color Temp	Finish	Distribution	Voltage	Dimming	Options
BLEDR							
	24 = 24W **18** = 18W **12** = 12W	**Blank** = 5000K (Cool) **N** = 4000K (Neutral) **Y** = 3000K (Warm)	**Blank** = Bronze **W** = White	**Blank** = Standard **180** = 180 degrees (12W only)	**Blank** = No Option (120-277V) **/480** = 480V	**Blank** = None (Standard) **/D10** = 0-10V Dimming	**Blank** = No Option **/E** = Battery Backup **/EC** = Battery Backup Cold Weather

Copyright © 2018 RAB Lighting Inc. All Rights Reserved Note: Specifications are subject to change at any time without notice

CCW

Date:_____
Type:_____
Project:_____

General Description:
The CCW fixture is a contemporary wrap fixture that is designed to be surface or pendant mounted. It is designed for quick installation onto plaster or sheet rock ceilings and is available with a wide variety of options.

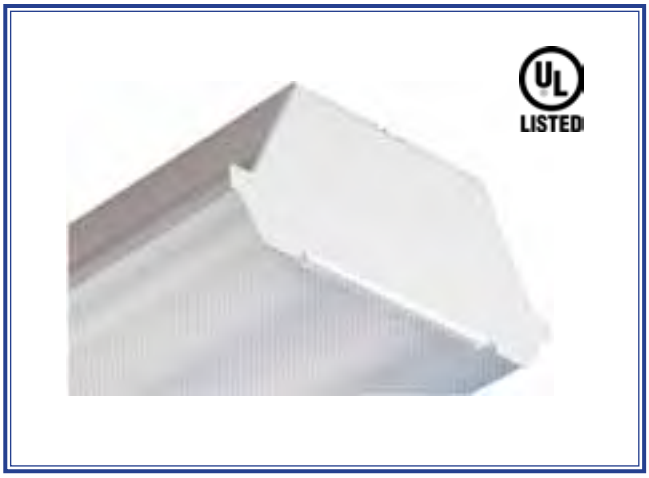

CCW END VIEW

Features and Benefits:
- Housing is standard in heavy gauge die formed cold rolled steel, for strength and maximum heat dissipation.
- Finished in Baked white enamel or post powder coat for maximum reflectivity and durability.
- Clear acrylic prismatic diffuser snaps
- on and off for easy access to lamps
- All units are stamped with 7/8" knock-outs in the top and sides and includes access plates.
- Standard lens is prismatic acrylic pattern 12, which provides uniform light distribution.
- All units are furnished with a universal voltage UL Listed Class "P" thermally protected ballast.
- Meets or exceeds all requirements for UL Luminaire Standard #1598.
- Complies with National Energy Standards.

DIMENSIONS

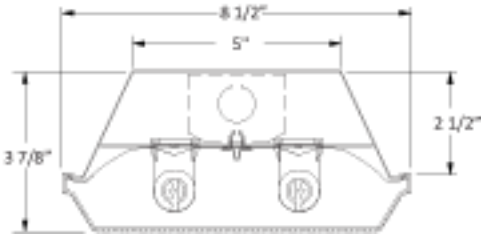

Application:
This fixture is best used in corridors, classrooms, and other commercial or industrial areas where sheet rock or plaster ceilings are used.

Housing	Length	# of Lamps	Lamp Type	Ballast	Voltage	Options
CCW	**2'** **4'** **8'**	**1** **2** **4**	**F32 T8** **F17T8** **F28T5** **F54 T5HO**	***T8*** **NP** (0.88 BF) **LP** (0.77 BF) **HP** (1.18BF) ***T5HO*** **NP** (1.0 BF)	***T8*** **120** **277** **EBUNI** (Multi Volt) ***T5HO*** **EBUNI** (Multi Volt)	**PC** Polycarbonate Lens .125 **DM** Dimming Ballast **EMB** Emergency Ballast **NYC** 20 Gauge NYC Housing

Notice: *Dimensions and specifications subject to change without notice.*
Consult factory for additional options and accessories.

5-C MARLEN DRIVE, HAMILTON, NJ 08691
PHONE: 609-587-7900 FAX: 609-613-5586
WWW.MONMOUTHLIGHTING.COM

DECO digital®

Powered By: NICHIA

D230-LED
Sports Flood Light

Digitize your light.™

Job Information

Type:	
Catalog #:	
Project:	
Comments:	
Prepared by:	

INCLUDES LABOR ALLOWANCE

LED lighting facts

DLC QPL LISTED

Buy American Act COMPLIANT

Description

Computer-designed optics and precise aiming make the D230-LED the best choice for amateur or professional sports facilities.

D230-LED



c UL us LISTED

Features

- Precision spun and anodized aluminium two-part reflector system.
- Upper reflector is directly mounted to the housing, while the lower reflector latches to the upper for easy installation.
- Impact resistant tempered glass lens is silicone sealed to the lower reflector.
- Die cast aluminium housing and driver with stamped aluminium cover and gasket, chromate conversion coating and textured bronze finish.
- Spun aluminium reflectors with flat tempered glass, gasket and clamp band.
- UL/CUL listed for wet locations.
- Great for wall washing applications.
- EPA rating of 2.2.

Dimensions

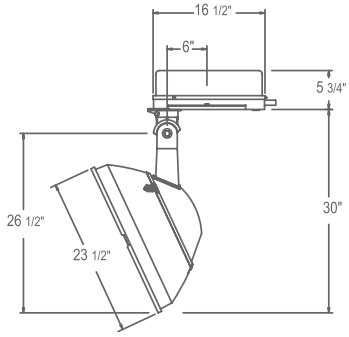

Ordering Information:

Example: (D230-LED-240-30-UNV-YM-BZ-PC)

D230-LED | | | | | | | |

Series	Wattage/Lumen	Color Temp.	Voltage	Mounting	Finish	Option
Sports Flood Light	240 240W/29075[3,6] 350 350W/42401[3,6] 450 450W/52179[3,6]	30 3000K 35 3500K 40 4000K 50 5000K[4,5,6]	UNV 120-277V 480 480V (Step-Down Transformer used for 480V Divider)	PT Post Top 2-3/8" YM Large Yoke Mount	BZ Bronze[1] BL Black WH White CU Custom[2]	PC Photocell[5,7] WDF Wired Double Fuse[5] WSF Wired Single Fuse[5]

[1] Standard for fixture
[2] Contact factory for custom finish
[3] Delivered Lumens (5K)
[4] Standard Color Temp.
[5] Pleas specify voltage (eg. 120V)
[6] DLC Listed
[7] Remote

©2016 Deco Lighting, www.getdeco.com T: (800) 613-DECO F: (310) 366-6855
Note : Specifications subject to change without notice. Rev Date: 3/30/2016 #1

DECO digital®

Powered By: NICHIA

D230-LED
Sports Flood Light

Digitize *your light.*™

Job Information

Type:	
Catalog #:	
Project:	
Comments:	
Prepared by:	

INCLUDES LABOR ALLOWANCE

LED lighting facts

DLC QPL LISTED

Buy American Act COMPLIANT

Perfomance Data

CRI:	80+
CCT:	3000K, 3500K, 4000K, 5000K
Warranty:	10 yr. Limited Warranty
Dimming:	Available with 0-10V inputs dimming down to 10%
Operating Temperature:	0°-50°C Max Ambient
L70 Rating:	100,000+ Hours
IP Rating:	IP65
Driver Current:	550mA

Delivered Light Output and Equivalency Chart

HID to LED Replacement		
Initial Lumens Delivered	LED	HID Replacement
15240 lm	120W	400W
25400 lm	200W	750W
30480 lm	240W	1000W

*for mounting heights over 25ft consult factory.

Mounting Options



Post Top



Yoke Mount

LED Lighting

DECO® | LIGHTING

Digitize *your light.*™

©2016 Deco Lighting, www.getdeco.com T: (800) 613-DECO F: (310) 366-6855
Note : Specifications subject to change without notice. Rev Date: 3/30/2016 #1

Elite Dimmable PAR Series

TCP's award winning PARs have just gotten better. With over 500 options, TCP's PAR series combines traditional beauty with top-notch technology.



Limitless options for the following applications:

- Track lights
- Recessed downlights
- Display lights
- Outdoor fixtures that protect lamps from the elements

Great features and benefits:

- Energy efficient: up to 85% less energy than halogen replacements
- Smooth, uniform dimming
- Long life: 25,000 hours
- 120W, 90W, 75W, 60W and 50W replacements
- NEW smooth outer housing
- Excellent color consistency and high color rendering (CRI)
- Available in 2400K, 2700K, 3000K, 3500K, 4100K and 5000K



PAR38 PAR30LN PAR30SN PAR20

TCP®
325 Campus Dr. | Aurora, Ohio 44202 | P: 800-324-1496 | tcpi.com
©TCP MARCH 2017/WF40202

ENERGY STAR PARTNER

LED	25,000 hours average rated life, 120 volts

Catalog Number

Notes | Type



Applications

Ideal for PAR38, PAR30, and PAR20 flood and spot light applications.

- Track Lights
- Recessed Downlights
- Display Lights
- Outdoor Fixtures that Protect Lamps from the Elements

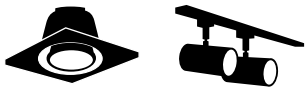

Features	Benefits
Up to 85% less energy than halogen alternatives	Instant energy savings
Long life	Minimizes replacement and maintenance costs
Unique full face optic	Provides designer grade light quality with same look as halogen replacement
Smooth, clean outside housing	Seemlessly blends into lighting applications
Very low heat generation	Perfect for sensitive display lighting such as art galleries
Excellent color consistency and CRI	Enhances colors of focal point while maintaining uniformity throughout lighting installation from lamp to lamp
Light weight	Track or down light installations are not strained by excess weight
UL approved for damp location	Can be used outdoors when protected from elements—withstands humidity indoors/outdoors
Shatter resistant	Lower the risk of injury and breakage

Specifications

	PAR38	PAR30LN	PAR30SN	PAR20
Input Line Voltage:	120 VAC	120 VAC	120 VAC	120 VAC
Input Power	17 & 14 W	14 & 12 W	12 & 10 W	10 & 8 W
Input Line Frequency	50/60HZ	50/60HZ	50/60HZ	50/60HZ
Lamp Life (Rated)	25,000 hrs	25,000 hrs	25,000 hrs	25,000 hrs
Minimum Starting Temp	-30ºC	-30ºC	-30ºC	-30ºC
Maximum Operating Temp	40ºC	40ºC	40ºC	40ºC



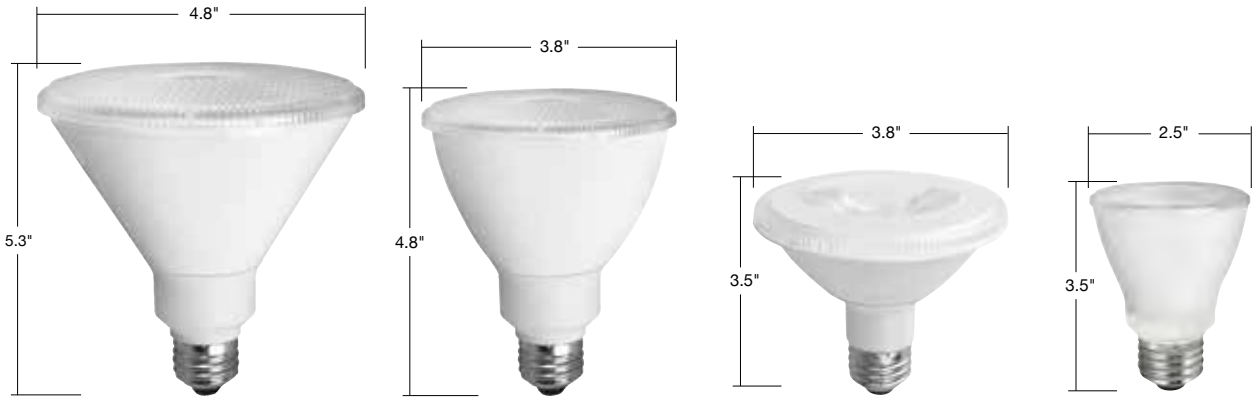

PAR38 PAR30LN PAR30SN PAR20

c UL us 5 YEAR WARRANTY For the most up-to-date specs, please visit www.tcpi.com

TCP®
325 Campus Dr. | Aurora, Ohio 44202 | P: 1-800-324-1496 | tcpi.com
©TCP MARCH 2017/WF40202

ENERGY STAR PARTNER

Item #	Description	Voltage	Wattage	Incandescent Wattage Comparison	Lumens	LPW	CBCP	Beam Angle	CCT	CRI	M.O.L. (inches)	Diameter (inches)	Case Quantity	STK/MTO
PAR38														
LED17P38D24KFL	Dimmable 17W Smooth PAR38 - 2400K 40º	120	17	120	1200	70.6	2132	40	2400K	80	5.3	4.8	12	MTO
LED17P38D24KNFL	Dimmable 17W Smooth PAR38 - 2400K 25º	120	17	120	1200	70.6	4750	25	2400K	80	5.3	4.8	12	MTO
LED17P38D24KSP	Dimmable 17W Smooth PAR38 - 2400K 15º	120	17	90	1200	70.6	6937	15	2400K	80	5.3	4.8	12	MTO
LED17P38D27KFL	Dimmable 17W Smooth PAR38 - 2700K 40º	120	17	120	1200	70.6	2563	40	2700K	80	5.3	4.8	12	STK
LED17P38D27KNFL	Dimmable 17W Smooth PAR38 - 2700K 25º	120	17	120	1200	70.6	5710	25	2700K	80	5.3	4.8	12	STK
LED17P38D27KSP	Dimmable 17W Smooth PAR38 - 2700K 15º	120	17	90	1200	70.6	8338	15	2700K	80	5.3	4.8	12	MTO
LED17P38D30KFL	Dimmable 17W Smooth PAR38 - 3000K 40º	120	17	120	1250	73.5	3107	40	3000K	80	5.3	4.8	12	STK
LED17P38D30KNFL	Dimmable 17W Smooth PAR38 - 3000K 25º	120	17	120	1250	73.5	6130	25	3000K	80	5.3	4.8	12	STK
LED17P38D30KSP	Dimmable 17W Smooth PAR38 - 3000K 15º	120	17	90	1250	73.5	8658	15	3000K	80	5.3	4.8	12	MTO
LED17P38D35KFL	Dimmable 17W Smooth PAR38 - 3500K 40º	120	17	120	1275	75.0	3132	40	3500K	80	5.3	4.8	12	MTO
LED17P38D35KNFL	Dimmable 17W Smooth PAR38 - 3500K 25º	120	17	120	1275	75.0	7550	25	3500K	80	5.3	4.8	12	MTO
LED17P38D35KSP	Dimmable 17W Smooth PAR38 - 3500K 15º	120	17	90	1275	75.0	8771	15	3500K	80	5.3	4.8	12	MTO
LED17P38D41KFL	Dimmable 17W Smooth PAR38 - 4100K 40º	120	17	120	1300	76.5	3366	40	4100K	80	5.3	4.8	12	MTO
LED17P38D41KNFL	Dimmable 17W Smooth PAR38 - 4100K 25º	120	17	120	1300	76.5	7292	25	4100K	80	5.3	4.8	12	MTO
LED17P38D41KSP	Dimmable 17W Smooth PAR38 - 4100K 15º	120	17	90	1300	76.5	9947	15	4100K	80	5.3	4.8	12	MTO
LED17P38D50KFL	Dimmable 17W Smooth PAR38 - 5000K 40º	120	17	120	1300	76.5	3183	40	5000K	80	5.3	4.8	12	MTO
LED17P38D50KNFL	Dimmable 17W Smooth PAR38 - 5000K 25º	120	17	120	1300	76.5	7043	25	5000K	80	5.3	4.8	12	MTO
LED17P38D50KSP	Dimmable 17W Smooth PAR38 - 5000K 15º	120	17	90	1300	76.5	10989	15	5000K	80	5.3	4.8	12	MTO
LED14P38D24KFL	Dimmable 14W Smooth PAR38 - 2400K 40º	120	14	90	1050	75.0	2377	40	2400K	80	5.3	4.8	12	MTO
LED14P38D24KNFL	Dimmable 14W Smooth PAR38 - 2400K 25º	120	14	90	1050	75.0	4645	25	2400K	80	5.3	4.8	12	MTO
LED14P38D24KSP	Dimmable 14W Smooth PAR38 - 2400K 15º	120	14	90	1050	75.0	5806	15	2400K	80	5.3	4.8	12	MTO
LED14P38D27KFL	Dimmable 14W Smooth PAR38 - 2700K 40º	120	14	90	1050	75.0	2858	40	2700K	80	5.3	4.8	12	STK
LED14P38D27KNFL	Dimmable 14W Smooth PAR38 - 2700K 25º	120	14	90	1050	75.0	5583	25	2700K	80	5.3	4.8	12	STK
LED14P38D27KSP	Dimmable 14W Smooth PAR38 - 2700K 15º	120	14	90	1050	75.0	10949	15	2700K	80	5.3	4.8	12	MTO
LED14P38D30KWFL	Dimmable 14W Smooth PAR38 - 3000K 60º	120	14	90	1100	78.6	876	60	3000K	80	5.3	4.8	12	MTO
LED14P38D30KFL	Dimmable 14W Smooth PAR38 - 3000K 40º	120	14	90	1100	78.6	2846	40	3000K	80	5.3	4.8	12	STK
LED14P38D30KNFL	Dimmable 14W Smooth PAR38 - 3000K 25º	120	14	90	1100	78.6	6721	25	3000K	80	5.3	4.8	12	STK
LED14P38D30KSP	Dimmable 14W Smooth PAR38 - 3000K 15º	120	14	90	1100	78.6	11300	15	3000K	80	5.3	4.8	12	MTO
LED14P38D35KFL	Dimmable 14W Smooth PAR38 - 3500K 40º	120	14	90	1125	80.4	3469	40	3500K	80	5.3	4.8	12	MTO
LED14P38D35KNFL	Dimmable 14W Smooth PAR38 - 3500K 25º	120	14	90	1125	80.4	6970	25	3500K	80	5.3	4.8	12	MTO
LED14P38D35KSP	Dimmable 14W Smooth PAR38 - 3500K 15º	120	14	90	1125	80.4	10098	15	3500K	80	5.3	4.8	12	MTO
LED14P38D41KFL	Dimmable 14W Smooth PAR38 - 4100K 40º	120	14	90	1150	82.1	2612	40	4100K	80	5.3	4.8	12	MTO
LED14P38D41KNFL	Dimmable 14W Smooth PAR38 - 4100K 25º	120	14	90	1150	82.1	4546	25	4100K	80	5.3	4.8	12	MTO
LED14P38D41KSP	Dimmable 14W Smooth PAR38 - 4100K 15º	120	14	90	1150	82.1	11718	15	4100K	80	5.3	4.8	12	MTO
LED14P38D50KFL	Dimmable 14W Smooth PAR38 - 5000K 40º	120	14	90	1150	82.1	4621	40	5000K	80	5.3	4.8	12	MTO
LED14P38D50KNFL	Dimmable 14W Smooth PAR38 - 5000K 25º	120	14	90	1150	82.1	7611	25	5000K	80	5.3	4.8	12	MTO
LED14P38D50KSP	Dimmable 14W Smooth PAR38 - 5000K 15º	120	14	90	1150	82.1	12147	15	5000K	80	5.3	4.8	12	MTO
PAR30														
LED14P30D24KFL	Dimmable 14W Smooth PAR30 - 2400K 40º	120	14	75	1050	75.0	2513	40	2400K	80	4.8	3.8	12	MTO
LED14P30D24KNFL	Dimmable 14W Smooth PAR30 - 2400K 25º	120	14	75	1050	75.0	4417	25	2400K	80	4.8	3.8	12	MTO
LED14P30D24KSP	Dimmable 14W Smooth PAR30 - 2400K 15º	120	14	75	1050	75.0	7515	15	2400K	80	4.8	3.8	12	MTO
LED14P30D27KFL	Dimmable 14W Smooth PAR30 - 2700K 40º	120	14	75	1050	75.0	3021	40	2700K	80	4.8	3.8	12	STK
LED14P30D27KNFL	Dimmable 14W Smooth PAR30 - 2700K 25º	120	14	75	1050	75.0	5310	25	2700K	80	4.8	3.8	12	STK
LED14P30D27KSP	Dimmable 14W Smooth PAR30 - 2700K 15º	120	14	75	1050	75.0	9033	15	2700K	80	4.8	3.8	12	MTO
LED14P30D30KFL	Dimmable 14W Smooth PAR30 - 3000K 40º	120	14	75	1100	78.6	2881	40	3000K	80	4.8	3.8	12	STK
LED14P30D30KNFL	Dimmable 14W Smooth PAR30 - 3000K 25º	120	14	75	1100	78.6	8169	25	3000K	80	4.8	3.8	12	STK
LED14P30D30KSP	Dimmable 14W Smooth PAR30 - 3000K 15º	120	14	75	1100	78.6	9328	15	3000K	80	4.8	3.8	12	MTO
LED14P30D35KFL	Dimmable 14W Smooth PAR30 - 3500K 40º	120	14	75	1125	80.4	3196	40	3500K	80	4.8	3.8	12	MTO
LED14P30D35KNFL	Dimmable 14W Smooth PAR30 - 3500K 25º	120	14	75	1125	80.4	6662	25	3500K	80	4.8	3.8	12	MTO
LED14P30D35KSP	Dimmable 14W Smooth PAR30 - 3500K 15º	120	14	75	1125	80.4	9529	15	3500K	80	4.8	3.8	12	MTO
LED14P30D41KFL	Dimmable 14W Smooth PAR30 - 4100K 40º	120	14	75	1150	82.1	3154	40	4100K	80	4.8	3.8	12	MTO
LED14P30D41KNFL	Dimmable 14W Smooth PAR30 - 4100K 25º	120	14	75	1150	82.1	6813	25	4100K	80	4.8	3.8	12	MTO
LED14P30D41KSP	Dimmable 14W Smooth PAR30 - 4100K 15º	120	14	75	1150	82.1	9681	15	4100K	80	4.8	3.8	12	MTO
LED14P30D50KFL	Dimmable 14W Smooth PAR30 - 5000K 40º	120	14	75	1150	82.1	3212	40	5000K	80	4.8	3.8	12	MTO
LED14P30D50KNFL	Dimmable 14W Smooth PAR30 - 5000K 25º	120	14	75	1150	82.1	5872	25	5000K	80	4.8	3.8	12	MTO
LED14P30D50KSP	Dimmable 14W Smooth PAR30 - 5000K 15º	120	14	75	1150	82.1	10043	15	5000K	80	4.8	3.8	12	MTO

PAR30 continued next page

c UL us 5 YEAR WARRANTY

For the most up-to-date specs, please visit www.tcpi.com

TCP®
325 Campus Dr. | Aurora, Ohio 44202 | P: 1-800-324-1496 | tcpi.com

©TCP MARCH 2017/WF40202b

ENERGY STAR PARTNER

Item #	Description	Voltage	Wattage	Incandescent Wattage Comparison	Lumens	LPW	CBCP	Beam Angle	CCT	CRI	M.O.L. (inches)	Diameter (inches)	Case Quantity	STK/MTO
PAR30 continued														
LED12P30D24KFL	Dimmable 12W Smooth PAR30 - 2400K 40°	120	12	75	800	66.7	1600	40	2400K	80	4.8	3.8	12	MTO
LED12P30D24KNFL	Dimmable 12W Smooth PAR30 - 2400K 25°	120	12	75	800	66.7	4553	25	2400K	80	4.8	3.8	12	MTO
LED12P30D24KSP	Dimmable 12W Smooth PAR30 - 2400K 15°	120	12	75	800	66.7	6990	15	2400K	80	4.8	3.8	12	MTO
LED12P30D27KFL	Dimmable 12W Smooth PAR30 - 2700K 40°	120	12	75	850	70.8	1924	40	2700K	80	4.8	3.8	12	STK
LED12P30D27KNFL	Dimmable 12W Smooth PAR30 - 2700K 25°	120	12	75	850	70.8	5473	25	2700K	80	4.8	3.8	12	STK
LED12P30D27KSP	Dimmable 12W Smooth PAR30 - 2700K 15°	120	12	75	850	70.8	8402	15	2700K	80	4.8	3.8	12	MTO
LED12P30D30KFL	Dimmable 12W Smooth PAR30 - 3000K 40°	120	12	75	875	72.9	2596	40	3000K	80	4.8	3.8	12	STK
LED12P30D30KNFL	Dimmable 12W Smooth PAR30 - 3000K 25°	120	12	75	875	72.9	5523	25	3000K	80	4.8	3.8	12	STK
LED12P30D30KSP	Dimmable 12W Smooth PAR30 - 3000K 15°	120	12	75	875	72.9	8437	15	3000K	80	4.8	3.8	12	MTO
LED12P30D35KFL	Dimmable 12W Smooth PAR30 - 3500K 40°	120	12	75	900	75.0	2608	40	3500K	80	4.8	3.8	12	MTO
LED12P30D35KNFL	Dimmable 12W Smooth PAR30 - 3500K 25°	120	12	75	900	75.0	4060	25	3500K	80	4.8	3.8	12	MTO
LED12P30D35KSP	Dimmable 12W Smooth PAR30 - 3500K 15°	120	12	75	900	75.0	8956	15	3500K	80	4.8	3.8	12	MTO
LED12P30D41KFL	Dimmable 12W Smooth PAR30 - 4100K 40°	120	12	75	925	77.1	2759	40	4100K	80	4.8	3.8	12	MTO
LED12P30D41KNFL	Dimmable 12W Smooth PAR30 - 4100K 25°	120	12	75	925	77.1	6017	25	4100K	80	4.8	3.8	12	MTO
LED12P30D41KSP	Dimmable 12W Smooth PAR30 - 4100K 15°	120	12	75	925	77.1	7275	15	4100K	80	4.8	3.8	12	MTO
LED12P30D50KFL	Dimmable 12W Smooth PAR30 - 5000K 40°	120	12	75	950	79.2	2235	40	5000K	80	4.8	3.8	12	MTO
LED12P30D50KNFL	Dimmable 12W Smooth PAR30 - 5000K 25°	120	12	75	950	79.2	4088	25	5000K	80	4.8	3.8	12	MTO
LED12P30D50KSP	Dimmable 12W Smooth PAR30 - 5000K 15°	120	12	75	950	79.2	7375	15	5000K	80	4.8	3.8	12	MTO
PAR30SN														
LED12P30SD24KFL	Dimmable 12W Smooth PAR30 Short Neck - 2400K 40°	120	12	75	800	66.7	1881	40	2400K	80	3.5	3.8	12	MTO
LED12P30SD24KNFL	Dimmable 12W Smooth PAR30 Short Neck - 2400K 25°	120	12	75	800	66.7	3605	25	2400K	80	3.5	3.8	12	MTO
LED12P30SD24KSP	Dimmable 12W Smooth PAR30 Short Neck - 2400K 15°	120	12	75	800	66.7	6051	15	2400K	80	3.5	3.8	12	MTO
LED12P30SD27KFL	Dimmable 12W Smooth PAR30 Short Neck - 2700K 40°	120	12	75	850	70.8	2261	40	2700K	80	3.5	3.8	12	STK
LED12P30SD27KNFL	Dimmable 12W Smooth PAR30 Short Neck - 2700K 25°	120	12	75	850	70.8	4333	25	2700K	80	3.5	3.8	12	STK
LED12P30SD27KSP	Dimmable 12W Smooth PAR30 Short Neck - 2700K 15°	120	12	75	850	70.8	7274	15	2700K	80	3.5	3.8	12	MTO
LED12P30SD30KFL	Dimmable 12W Smooth PAR30 Short Neck - 3000K 40°	120	12	75	875	72.9	2349	40	3000K	80	3.5	3.8	12	STK
LED12P30SD30KNFL	Dimmable 12W Smooth PAR30 Short Neck - 3000K 25°	120	12	75	875	72.9	5630	25	3000K	80	3.5	3.8	12	STK
LED12P30SD30KSP	Dimmable 12W Smooth PAR30 Short Neck - 3000K 15°	120	12	75	875	72.9	7705	15	3000K	80	3.5	3.8	12	MTO
LED12P30SD35KFL	Dimmable 12W Smooth PAR30 Short Neck - 3500K 40°	120	12	75	900	75.0	2032	40	3500K	80	3.5	3.8	12	MTO
LED12P30SD35KNFL	Dimmable 12W Smooth PAR30 Short Neck - 3500K 25°	120	12	75	900	75.0	5832	25	3500K	80	3.5	3.8	12	MTO
LED12P30SD35KSP	Dimmable 12W Smooth PAR30 Short Neck - 3500K 15°	120	12	75	900	75.0	6914	15	3500K	80	3.5	3.8	12	MTO
LED12P30SD41KFL	Dimmable 12W Smooth PAR30 Short Neck - 4100K 40°	120	12	75	925	77.1	2235	40	4100K	80	3.5	3.8	12	MTO
LED12P30SD41KNFL	Dimmable 12W Smooth PAR30 Short Neck - 4100K 25°	120	12	75	925	77.1	7159	25	4100K	80	3.5	3.8	12	MTO
LED12P30SD41KSP	Dimmable 12W Smooth PAR30 Short Neck - 4100K 15°	120	12	75	925	77.1	7768	15	4100K	80	3.5	3.8	12	MTO
LED12P30SD50KFL	Dimmable 12W Smooth PAR30 Short Neck - 5000K 40°	120	12	75	950	79.2	2500	40	5000K	80	3.5	3.8	12	MTO
LED12P30SD50KNFL	Dimmable 12W Smooth PAR30 Short Neck - 5000K 25°	120	12	75	950	79.2	4792	25	5000K	80	3.5	3.8	12	MTO
LED12P30SD50KSP	Dimmable 12W Smooth PAR30 Short Neck - 5000K 15°	120	12	75	950	79.2	8045	15	5000K	80	3.5	3.8	12	MTO
LED10P30SD24KFL	Dimmable 10W Smooth PAR30 Short Neck - 2400K 40°	120	10	60	600	60.0	1713	40	2400K	80	3.5	3.8	12	MTO
LED10P30SD24KNFL	Dimmable 10W Smooth PAR30 Short Neck - 2400K 25°	120	10	60	600	60.0	3683	25	2400K	80	3.5	3.8	12	MTO
LED10P30SD24KSP	Dimmable 10W Smooth PAR30 Short Neck - 2400K 15°	120	10	60	600	60.0	6163	15	2400K	80	3.5	3.8	12	MTO
LED10P30SD27KFL	Dimmable 10W Smooth PAR30 Short Neck - 2700K 40°	120	10	60	700	70.0	2060	40	2700K	80	3.5	3.8	12	STK
LED10P30SD27KNFL	Dimmable 10W Smooth PAR30 Short Neck - 2700K 25°	120	10	60	700	70.0	4427	25	2700K	80	3.5	3.8	12	STK
LED10P30SD27KSP	Dimmable 10W Smooth PAR30 Short Neck - 2700K 15°	120	10	60	700	70.0	7408	15	2700K	80	3.5	3.8	12	MTO
LED10P30SD30KFL	Dimmable 10W Smooth PAR30 Short Neck - 3000K 40°	120	10	60	725	72.5	2173	40	3000K	80	3.5	3.8	12	STK
LED10P30SD30KNFL	Dimmable 10W Smooth PAR30 Short Neck - 3000K 25°	120	10	60	725	72.5	4799	25	3000K	80	3.5	3.8	12	STK
LED10P30SD30KSP	Dimmable 10W Smooth PAR30 Short Neck - 3000K 15°	120	10	60	725	72.5	8181	15	3000K	80	3.5	3.8	12	MTO
LED10P30SD35KFL	Dimmable 10W Smooth PAR30 Short Neck - 3500K 40°	120	10	60	750	75.0	2289	40	3500K	80	3.5	3.8	12	MTO
LED10P30SD35KNFL	Dimmable 10W Smooth PAR30 Short Neck - 3500K 25°	120	10	60	750	75.0	4927	25	3500K	80	3.5	3.8	12	MTO
LED10P30SD35KSP	Dimmable 10W Smooth PAR30 Short Neck - 3500K 15°	120	10	60	750	75.0	5912	15	3500K	80	3.5	3.8	12	MTO
LED10P30SD41KFL	Dimmable 10W Smooth PAR30 Short Neck - 4100K 40°	120	10	60	775	77.5	1894	40	4100K	80	3.5	3.8	12	MTO
LED10P30SD41KNFL	Dimmable 10W Smooth PAR30 Short Neck - 4100K 25°	120	10	60	775	77.5	5539	25	4100K	80	3.5	3.8	12	MTO
LED10P30SD41KSP	Dimmable 10W Smooth PAR30 Short Neck - 4100K 15°	120	10	60	775	77.5	7127	15	4100K	80	3.5	3.8	12	MTO
LED10P30SD50KFL	Dimmable 10W Smooth PAR30 Short Neck - 5000K 40°	120	10	60	800	80	2432	40	5000K	80	3.5	3.8	12	MTO
LED10P30SD50KNFL	Dimmable 10W Smooth PAR30 Short Neck - 5000K 25°	120	10	60	800	80	5844	25	5000K	80	3.5	3.8	12	MTO
LED10P30SD50KSP	Dimmable 10W Smooth PAR30 Short Neck - 5000K 15°	120	10	60	800	80	7717	15	5000K	80	3.5	3.8	12	MTO

PAR20 next page

c UL us 5 YEAR WARRANTY

For the most up-to-date specs, please visit www.tcpi.com

TCP®
325 Campus Dr. | Aurora, Ohio 44202 | P: 1-800-324-1496 | tcpi.com

©TCP MARCH 2017/WF40202c

ENERGY STAR PARTNER

Smooth Uniform Dimming

Item #	Description	Voltage	Wattage	Incandescent Wattage Comparison	Lumens	LPW	CBCP	Beam Angle	CCT	CRI	M.O.L. (inches)	Diameter (inches)	Case Quantity	STK/MTO
PAR20														
LED10P20D24KFL	Dimmable 10W Smooth PAR20 - 2400K 40°	120	10	60	600	60.0	1163	40	2400K	80	3.5	2.5	12	MTO
LED10P20D24KNFL	Dimmable 10W Smooth PAR20 - 2400K 25°	120	10	60	600	60.0	2312	25	2400K	80	3.5	2.5	12	MTO
LED10P20D27KFL	Dimmable 10W Smooth PAR20 - 2700K 40°	120	10	60	600	60.0	1398	40	2700K	80	3.5	2.5	12	STK
LED10P20D27KNFL	Dimmable 10W Smooth PAR20 - 2700K 25°	120	10	60	600	60.0	2779	25	2700K	80	3.5	2.5	12	STK
LED10P20D30KFL	Dimmable 10W Smooth PAR20 - 3000K 40°	120	10	60	650	65.0	1364	40	3000K	80	3.5	2.5	12	STK
LED10P20D30KNFL	Dimmable 10W Smooth PAR20 - 3000K 25°	120	10	60	650	65.0	2865	25	3000K	80	3.5	2.5	12	STK
LED10P20D35KFL	Dimmable 10W Smooth PAR20 - 3500K 40°	120	10	60	675	67.5	1470	40	3500K	80	3.5	2.5	12	MTO
LED10P20D35KNFL	Dimmable 10W Smooth PAR20 - 3500K 25°	120	10	60	675	67.5	2923	25	3500K	80	3.5	2.5	12	MTO
LED10P20D41KFL	Dimmable 10W Smooth PAR20 - 4100K 40°	120	10	60	700	70.0	1493	40	4100K	80	3.5	2.5	12	MTO
LED10P20D41KNFL	Dimmable 10W Smooth PAR20 - 4100K 25°	120	10	60	700	70.0	2967	25	4100K	80	3.5	2.5	12	MTO
LED10P20D50KFL	Dimmable 10W Smooth PAR20 - 5000K 40°	120	10	60	725	72.5	1546	40	5000K	80	3.5	2.5	12	MTO
LED10P20D50KNFL	Dimmable 10W Smooth PAR20 - 5000K 25°	120	10	60	725	72.5	3073	25	5000K	80	3.5	2.5	12	MTO
LED8P20D24KFL	Dimmable 8W Smooth PAR20 - 2400K 40°	120	8	50	500	62.5	1006	40	2400K	80	3.5	2.5	12	MTO
LED8P20D24KNFL	Dimmable 8W Smooth PAR20 - 2400K 25°	120	8	50	500	62.5	1943	25	2400K	80	3.5	2.5	12	MTO
LED8P20D27KFL	Dimmable 8W Smooth PAR20 - 2700K 40°	120	8	50	575	71.9	1210	40	2700K	80	3.5	2.5	12	STK
LED8P20D27KNFL	Dimmable 8W Smooth PAR20 - 2700K 25°	120	8	50	575	71.9	2336	25	2700K	80	3.5	2.5	12	STK
LED8P20D30KFL	Dimmable 8W Smooth PAR20 - 3000K 40°	120	8	50	600	75.0	1416	40	3000K	80	3.5	2.5	12	STK
LED8P20D30KNFL	Dimmable 8W Smooth PAR20 - 3000K 25°	120	8	50	600	75.0	2463	25	3000K	80	3.5	2.5	12	STK
LED8P20D35KFL	Dimmable 8W Smooth PAR20 - 3500K 40°	120	8	50	625	78.1	1308	40	3500K	80	3.5	2.5	12	MTO
LED8P20D35KNFL	Dimmable 8W Smooth PAR20 - 3500K 25°	120	8	50	625	78.1	1974	25	3500K	80	3.5	2.5	12	MTO
LED8P20D41KFL	Dimmable 8W Smooth PAR20 - 4100K 40°	120	8	50	650	81.2	1327	40	4100K	80	3.5	2.5	12	MTO
LED8P20D41KNFL	Dimmable 8W Smooth PAR20 - 4100K 25°	120	8	50	650	81.2	2291	25	4100K	80	3.5	2.5	12	MTO
LED8P20D50KFL	Dimmable 8W Smooth PAR20 - 5000K 40°	120	8	50	650	81.2	1501	40	5000K	80	3.5	2.5	12	MTO
LED8P20D50KNFL	Dimmable 8W Smooth PAR20 - 5000K 25°	120	8	50	650	81.2	2059	25	5000K	80	3.5	2.5	12	MTO

c UL us 5 YEAR WARRANTY

For the most up-to-date specs, please visit www.tcpi.com

TCP®
325 Campus Dr. | Aurora, Ohio 44202 | P: 1-800-324-1496 | tcpi.com

©TCP MARCH 2017/WF40202d

ENERGY STAR PARTNER

CREATING BEAUTY

TCP has a 20-year history in energy-efficient lighting. Thanks to our cutting edge technology and manufacturing expertise, we have shipped billions of high quality lamps. Our integrated technology and manufacturing provides expedited time-to-market. With TCP, you can count on unique lighting products designed to meet very specific needs—lighting that transforms your surroundings and envelopes you in warmth—lighting that generates beauty with every flip of the switch.

LED

For more information on the quality and care TCP can deliver, call us at 800.324.1496 or visit tcpi.com

325 Campus Dr. | Aurora, Ohio 44202 | P: 800.324.1496 | F: 877.487.0516

LED	25,000 Hours average rated life, 12 Volts

Catalog Number

Notes | Type

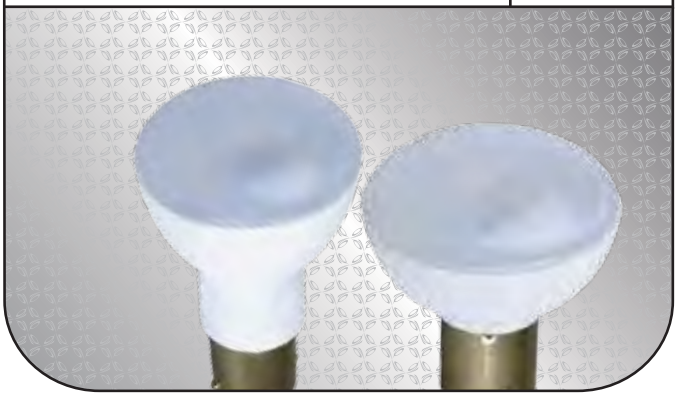

Applications:

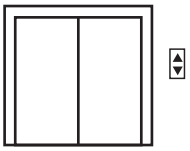

✚ Low Voltage Elevator Lighting

Replaces 20 watt 1383 and GBF incandescent lamps.

Features and Benefits

- Energy Efficient: 90% less energy than standard incandescent replacements
- Long life: 25,000 hours (lasts at least 15 times longer than alternative)
- More Light: More overall light output compared to incandescent
- Very Durable: Solid state lighting technology significantly reduces lighting service & maintenance due to robust lighting design. LEDs perform exceptionally well in rough service lighting applications.
- Exceptional ON/OFF cycling capability that is compatible with occupancy control systems
- Very low heat generation in cab as compared to incandescent lamps.
- No need for shatter resistant coatings. Polycarbonate lens is shatter resistant.



Specifications

Input Line Voltage: ..... 12V VAC/DC
Input Power 2W
Input Line Frequency 50/60HZ
Lamp Life (Rated) ..... 25,000 hrs
Minimum Starting Temp ..... -20ºC
Maximum Operating Temp 40ºC
CCT 2700K
CRI 80

Warranties and Certifications:	Item #	Description	Wattage	Lumens	Base Type	CRI	Lamp Life	Voltage	CCT
3 YEAR WARRANTY c UL us LISTED	LED2W1383V2	2W 1383 Elevator Lamp - 2700K, Frosted	2	150	BA15S	80	25,000	12V	2700K
	LED2WGBFV2	2W GBF Elevator Lamp - 2700K, Frosted	2	150	BA15D	80	25,000	12V	2700K

For the most up-to-date specs, please visit www.tcpi.com

TCP
325 Campus Dr. | Aurora, Ohio 44202 | P: 1-800-324-1496 | F: 330-995-6188 | tcpi.com

©TCP OCT 2016/WF23909

ENERGY STAR PARTNER

www.etiled.us

12" Round Flush Mount LED

54074143

14 Watt 1000lms Round Flush Mount
Specifications



The ETi 14 watt 1000 lumen LED round flush mount fixture offers exceptional performance for precision lighting applications, while reducing energy and maintenance cost when compared with conventional light sources. Lasting over 10 times longer, these flush mount fixtures are high quality replacements for incandescent flush mount fixtures and is available in 4000°K. They are UL listed for use in damp and dry locations. ENERGY STAR rated. Suitable for installations from – 4° F to 95° F.

KEY FEATURES & BENEFITS

- 14 Watts
- Multi-volt 100-277V
- 1000 lumen, 4000K CCT
- Non-dimmable
- UL damp location rated
- No UV, IR or mercury
- Warranty 5 years or 50,000 hours

c UL us LISTED

RoHS Compliant

FIXTURE DIMENSIONS

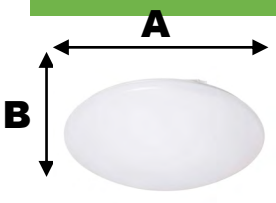

SKU# 54074143

Dimension A = 11.8”
Dimension B = 3.7”

This device complies with part 15 of the FCC Rules. Operation is subject to the following two conditions: (1) This device may not cause harmful interference, and (2) this device must accept any interference received, including interference that may cause undesired operation. For FCC Part 15 user information, please see www.etiled.us/fcc15b

APPLICATION INFORMATION

Designed to be used anywhere a standard incandescent fixture is used. Typically used in bedrooms, hallways, kitchens, living rooms and recreational rooms. The LED round flush mount fixture carries a 5 year Warranty.

ENERGY STAR

ETi SOLID STATE LIGHTING INC.

855-384-7754 www.etiled.us

54074143 updated 6/09/2016

12" Round Flush Mount LED

SPECIFICATION DATA

Project _____

Item Number_____

Prepared by_____Date_____

ORDERING INFORMATION

Item Number	Description	Wattage	Input Voltage (VAC)	Average Rated Life[1]	Typical Lumens[2]	CCT[3]	CRI[4]	Power Factor	R9	Duv	CBCP	Beam	Operating Frequency
54074143	LED14w FLUSH-MOUNT 840100-277 NDIM	14	100-277	50,000	1000	4000K	82	>.95	26.1	.0015	270	120	50/60Hz

[1] Hours lifetime with 70% lumen maintenance

[2] Thermally stable typical lumens (±10%)

[3] Thermally stable CCT (±10%)

[4] Color rendering index/Ra

SHIPPING INFORMATION

Item Number	Item UPC	Item Dimensions (H x L x W)	Item Weight (lbs)	Inner Pack Qty	Inner Carton Bar Code	Inner Carton Dimensions (H x L x W)	Inner Pack Weight (lbs)	Master Pack Qty	Master Carton Bar Code	Master Dimen-sions (H x L x W)	Master Pack Weight (lbs)
54074143	836607 008879	12.9" x 12.8" x 4.4"	1.8	N/A	N/A	N/A	N/A	6	50836607 008874	14.1" x 27.8" x13.8"	15.2

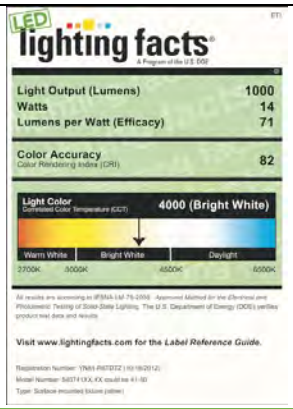

ENERGY STAR

The Americas Headquarters
720 Corporate Woods PKWY
Vernon Hills, IL 60061

855-384-7754 www.etiled.us

54074143 updated 6/09/2016

www.etiled.us

16" Round Flush Mount

LED 54075142

22 Watt 1700lms Round Flush Mount

Specifications



The ETi 22 watt 1700 lumen LED round flush mount fixture offers exceptional performance for precision lighting applications, while reducing energy and maintenance cost when compared with conventional light sources. Lasting over 10 times longer, these flush mount fixtures are high quality replacements for incandescent flush mount fixtures and is available in 4000°K. They are UL listed for use in damp and dry locations. ENERGY STAR rated. Suitable for installations from – 4° F to 95° F.

KEY FEATURES & BENEFITS

- 22 Watts
- Multi-volt 100-277V
- 1700 lumen, 4000K CCT
- Non-dimmable
- UL damp location rated
- No UV, IR or mercury
- Warranty 5 years or 50,000 hours

c UL us LISTED

RoHS Compliant

FIXTURE DIMENSIONS

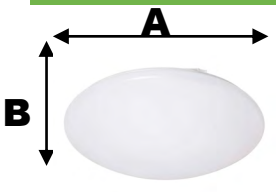

SKU# 54075142

Dimension A = 16.0”
Dimension B = 4.6”

This device complies with part 15 of the FCC Rules. Operation is subject to the following two conditions: (1) This device may not cause harmful interference, and (2) this device must accept any interference received, including interference that may cause undesired operation. For FCC Part 15 user information, please see www.etiled.us/fcc15b

APPLICATION INFORMATION

Designed to be used anywhere a standard incandescent fixture is used. Typically used in bedrooms, hallways, kitchens, living rooms and recreational rooms. The LED round flush mount fixture carries a 3 year warranty.

ENERGY STAR

ETi SOLID STATE LIGHTING INC.

855-384-7754 www.etiled.us

54075142 updated 6/09/2016

16" Round Flush Mount

LED
54075142

SPECIFICATION DATA

Project _____

Item Number_____

Prepared by_____Date_____

ORDERING INFORMATION

Item Number	Description	Wattage	Input Voltage (VAC)	Average Rated Life[1]	Typical Lumens[2]	CCT[3]	CRI[4]	Power Factor	R9	Duv	CBCP	Beam	Operating Frequency
54075142	LED22w FLUSH-MOUNT 840100-277 NDIM	22	100-277	50,000	1700	4000K	82	>.95	28.6	.0011	472	120	50/60Hz

[1] Hours lifetime with 70% lumen maintenance

[2] Thermally stable typical lumens (±10%)

[3] Thermally stable CCT (±10%)

[4] Color rendering index/Ra

SHIPPING INFORMATION

Item Number	Item UPC	Item Dimensions (H x L x W)	Item Weight (lbs)	Inner Pack Qty	Inner Carton Bar Code	Inner Carton Dimensions (H x L x W)	Inner Pack Weight (lbs)	Master Pack Qty	Master Carton Bar Code	Master Dimen-sions (H x L x W)	Master Pack Weight (lbs)
54075142	836607 008824	16” x 16” x 4.6”	2	N/A	N/A	N/A	N/A	4	50836607 008829	21.2” x 18.3” x 17.7”	15



ENERGY STAR

The Americas Headquarters
720 Corporate Woods PKWY
Vernon Hills, IL 60061

855-384-7754 **www.etiled.us**

54075142 updated 6/09/2016

gotham®

Luminaire Type:
Catalog Number (autopopulated):



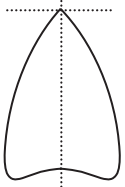

Gotham Architectural Downlighting
LED Downlights

6" Evo®
Cylinder

Solid-State Lighting

ENERGY STAR

A+ CAPABLE

FEATURES

OPTICAL SYSTEM
- Self-flanged semi-specular, matte-diffuse or finishing trim
- Patented Bounding Ray™ optical design (U.S. Patent No. 5,800,050)
- 45° cutoff to source and source image
- Top-down flash characteristic
- Polycarbonate lens integral to light engine

MECHANICAL SYSTEM
- Heavy-gauge aluminum construction
- Ceiling mount and wall mount for direct installation to 4" octagonal or square junction box
- Pendant mount entry for 3/8" National Pipe Thread stem; wires supplied by others
- Unique mounting mechanism at top of cylinders for easy one-person installation
- EDXB driver includes 3-foot DMX signal cable when ordered with FCM or WM mounting option. Fixture includes 10-foot DMX signal cable when ordered with PM or ACC mounting option.
- ACC180 provided with 15' 5-wire cord for power and 0-10V dimming

ELECTRICAL SYSTEM
- Fully serviceable and upgradeable LED light engine
- 70% lumen maintenance at 60,000 hours
- Tested according LM-79 and LM-80 standards
- 2.5 SDCM; 85 CRI typical, 90+ CRI optional
- Overload and short circuit protected
- Dimming wires supplied by others

LISTINGS
- Fixtures are CSA certified to meet US and Canadian standards; wet location, covered ceiling. ENERGY STAR® certified product.

WARRANTY
- 5-year limited warranty. Complete warranty terms located at: www.acuitybrands.com/CustomerResources/Terms_and_conditions.aspx

Note: Actual performance may differ as a result of end user environment and application. All values are design or typical values, measured under laboratory conditions at 25° C.

ORDERING INFORMATION

A+ Capable options indicated by this color background.

EXAMPLE: EVO CYL 35/10 6AR MWD LSS MVOLT EZ1 FCM DWHG

Series	Type	Color temperature	Nominal lumen values	Aperture/ Trim color	Trim type	Distribution[2]	Finish
EVO	**CYL**	**27/** 2700 K **30/** 3000 K **35/** 3500 K **40/** 4000 K **50/** 5000 K	**10** 1000 lumens **15** 1500 lumens **20** 2000 lumens **25** 2500 lumens **30** 3000 lumens **35** 3500 lumens **40** 4000 lumens **45** 4500 lumens	**6AR** Clear **6PR** Pewter **6WTR** Wheat **6GR** Gold **6WR**[1] White **6BR**[1] Black **6WRAMF**[1] White anti-microbial	(blank) Downlight **W** Wallwash	**VND** Very narrow (0.5 s/mh) **ND** Narrow (0.7 s/mh) **MD** Medium (0.9 s/mh) **MWD** Medium wide (1.0 s/mh) **WD** Wide (1.2 s/mh)	**LSS** Semi-specular **LD** Matte-diffuse **LS** Specular

Voltage	Driver[3]	Mounting	Options
MVOLT **120** **277**	**EZ10** eldoLED 0-10V ECOdrive. Linear dimming to 10% min. **EZ1** eldoLED 0-10V ECOdrive. Linear dimming to 1% min. **EZB** eldoLED 0-10V SOLOdrive. Logarithmic dimming to <1%. **EDAB** eldoLED SOLOdrive DALI. Logarithmic dimming to <1%. **EDXB** eldoLED POWERdrive DMX with RDM (remote device management). Square Law dimming to <1%. Includes termination resistor. Refer to DMXR Manual. **EXA1**[4] XPoint Wireless, eldoLED 0-10V ECOdrive. Linear dimming to 1%. Refer to XPoint tech sheet. **EXAB**[4] XPoint Wireless, eldoLED 0-10V SOLOdrive. Logarithmic dimming to <1%. Refer to XPoint tech sheet. **ECOS2**[5,6] Lutron® Hi-Lume® 2-wire forward-phase driver. Minimum dimming level 1%. Minimum lumen 1000/ Maximum lumen 3000. **ECOS3**[5] Lutron® Hi-Lume® 3-wire or EcoSystem® dimming driver. Minimum dimming level 1%. Minimum lumen 1000/Maximum lumen 4500.	**FCM** Ceiling mount **WM**[7] Wall mount **PM** Pendant 3/8" thread mount **ACC**[8] 10ft aircraft cable and cord mount **ACC180**[8] 15ft aircraft cable and cord mount	**SF**[9] Single fuse **CRI90** High CRI (90+) **NPS80EZ**[6,10] Sensor Switch® nLight® dimming pack controls 0-10V eldoLED drivers. **NPS80EZER**[6,10,11] Sensor Switch® nLight® dimming pack controls 0-10V eldoLED drivers. ER controls fixtures on emergency circuit operation.

Architectural Colors - Powder Paint[12]

DWHG	Matte white (standard)
DDB	Dark bronze
DBL	Black
DWH	Gloss white
DMB	Medium bronze
DNA	Natural aluminum
DSS	Sandstone
DGC	Charcoal grey
DTG	Tennis green
DBR	Bright red
DSB	Steel blue

© 2010-2017 Acuity Brands Lighting, Inc. All Rights Reserved. Rev. 09/05/17. Specifications subject to change without notice.

DIMENSIONAL DATA

All dimensions are inches (centimeters) unless otherwise noted.

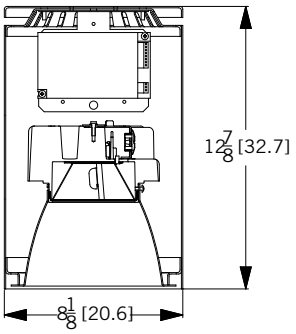

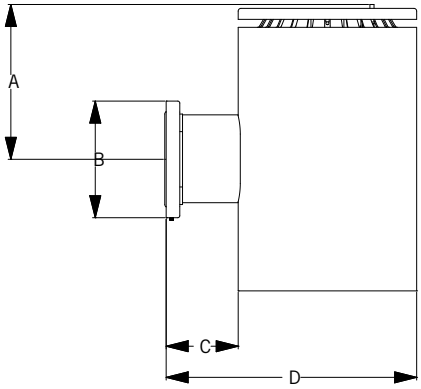

Reflector aperture: 6-1/4 (15.9)
Housing diameter: 8-1/8 (20.3)

Wall mount dimensions
A = 7-3/4 (19.7)
B = 5-5/16 (13.5)
C = 3-1/4 (8.3)
D = 10-7/8 (27.6)

ELECTRICAL

WATTAGE CONSUMPTION MATRIX			
LUMENS	**LM ACTUAL**	**WATTAGE**	**LUMENS per WATT**
1000	1,059	11.8	90.1
1500	1,572	18.5	85.0
2000	2,058	23.2	88.9
2500	2,612	29.5	88.5
3000	3,077	36.6	84.1
3500	3,591	42.1	85.3
4000	4,046	48.1	84.2
4500	4,555	46.9	97.1

ACCESSORIES

ACCESSORIES order as separate catalog numbers (shipped separately)

CYS[13]	3/8” stem and canopy with 5° “hang straight” swivel	**CRSX**[13]	3/8” stem and canopy with 45° swivel. Use this nomenclature when ordering EDXB driver
CRS[13]	3/8” stem and canopy with 45° swivel	**SDT 347/120 75VA**[14]	347V Step-down transformer
CYSX[13]	3/8” stem and canopy with 5° “hang straight” swivel. Use this nomenclature when ordering EDXB driver		

NOTES

ORDERING NOTES

1. Not available with finishes.
2. Not available with wallwash trim type.
3. Refer to TECH-240 for compatible dimmers.
4. XPoint® CMRB ships separately.
5. Not available with nLight® and XPoint options.
6. Specify voltage. ECOS2 not available in 277V
7. Access panel (supplied by others) recommended for use with nLight® and XPoint®.
8. White cord with white housings. All others black cord.
9. 120V or 277V only.
10. Interface remote mounted.
11. For use with generator supply EM power. Will require an emergency hot feed and normal hot feed.
12. Additional architectural colors available; see www.lithonia.com/archcolors.
13. Color and length of stem must be specified (from 6” to 240” in even increments in maximum sections of 48”). Ex.: CYS06 DWHG. Ceiling attachment for interior use. Consult factory for exterior use. Wire not included.
14. Transformer must be field-installed to an accessible remote-mounted junction box.

© 2010-2017 Acuity Brands Lighting, Inc. All Rights Reserved. Rev. 09/05/17. Specifications subject to change without notice.

Distribution Curve	Distribution Data	Output Data	Coefficient of Utilization	Illuminance: Single Luminaire 30" Above Floor

EVO 35/40 6AR LS

INPUT WATTS: 48.1, DELIVERED LUMENS: 4046, LM/W=84.1 , 1.03 S/MH, TEST NO. LTL27768

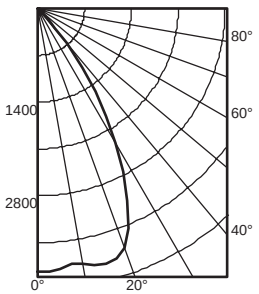

	Ave	Lumens
0	3935	
5	3901	371
15	3944	1106
25	3172	1427
35	1508	926
45	221	203
55	6	10
65	2	2
75	1	1
85	0	0
90	0	

Zone	Lumens	% Lamp
0° - 30°	2904.3	71.8
0° - 40°	3830.0	94.7
0° - 60°	4043.4	99.9
0° - 90°	4046.3	100.0
90° - 180°	0.0	0.0
0° - 180°	4046.3	*100.0
*Efficiency		

pf / pc / pw	80% 50%	80% 30%	80% 10%	20% 70% 50%	20% 70% 30%	20% 70% 10%	20% 50% 50%	20% 50% 30%	20% 50% 10%
0	119	119	119	116	116	116	111	111	111
1	111	108	106	109	106	104	105	103	101
2	103	99	96	101	98	95	98	95	93
3	96	91	87	95	90	87	92	88	85
4	90	84	80	89	84	80	87	82	79
5	84	78	74	83	78	74	81	77	73
6	79	73	69	78	73	68	77	72	68
7	74	68	64	73	68	64	72	67	63
8	70	64	60	69	63	60	68	63	59
9	66	60	56	65	60	56	64	59	56
10	62	56	52	62	56	52	61	56	52

Mounting Height	Inital FC Center Beam	50% beam - 54.4° Diameter	50% beam - 54.4° FC	10% beam - 78.1° Diameter	10% beam - 78.1° FC
8.0	130.1	5.7	65.1	8.9	13.0
10.0	70.0	7.7	35.0	12.2	7.0
12.0	43.6	9.8	21.8	15.4	4.4
14.0	29.8	11.8	14.9	18.7	3.0
16.0	21.6	13.9	10.8	21.9	2.2

EVO 35/35 6AR LS

INPUT WATTS: 42.1, DELIVERED LUMENS: 3591, LM/W=85.3, 1.05 S/MH, TEST NO. LTL27767

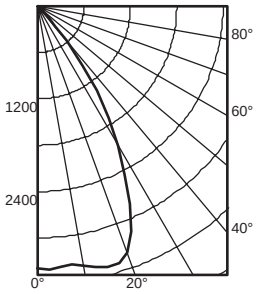

	Ave	Lumens
0	3400	
5	3390	324
15	3497	981
25	2830	1274
35	1335	820
45	193	177
55	5	9
65	2	2
75	1	1
85	1	1
90	1	

Zone	Lumens	% Lamp
0° - 30°	2579.3	71.8
0° - 40°	3399.8	94.7
0° - 60°	3586.3	99.9
0° - 90°	3590.5	100.0
90° - 180°	0.0	0.0
0° - 180°	3590.5	*100.0
*Efficiency		

pf / pc / pw	80% 50%	80% 30%	80% 10%	20% 70% 50%	20% 70% 30%	20% 70% 10%	20% 50% 50%	20% 50% 30%	20% 50% 10%
0	119	119	119	116	116	116	111	111	111
1	111	108	106	109	106	104	105	103	101
2	103	99	96	101	98	95	98	95	93
3	96	91	87	95	90	87	92	88	85
4	90	84	80	89	84	80	87	82	79
5	84	78	74	83	78	74	81	77	73
6	79	73	69	78	72	68	77	72	68
7	74	68	64	73	68	64	72	67	63
8	70	64	60	69	63	59	68	63	59
9	66	60	56	65	60	56	64	59	55
10	62	56	52	62	56	52	61	56	52

Mounting Height	Inital FC Center Beam	50% beam - 55.2° Diameter	50% beam - 55.2° FC	10% beam - 78.2° Diameter	10% beam - 78.2° FC
8.0	112.4	5.7	56.2	8.9	11.2
10.0	60.4	7.8	30.2	12.2	6.0
12.0	37.7	9.9	18.8	15.4	3.8
14.0	25.7	12.0	12.9	18.7	2.6
16.0	18.7	14.1	9.3	21.9	1.9

EVO 35/20 6AR LS

INPUT WATTS: 23.2, DELIVERED LUMENS: 2058, LM/W=88.7, 1.02 S/MH, TEST NO. LTL27777

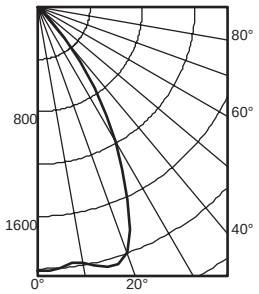

	Ave	Lumens
0	2018	
5	1997	190
15	2053	576
25	1618	733
35	749	459
45	105	94
55	3	5
65	1	1
75	0	0
85	0	0
90	0	

Zone	Lumens	% Lamp
0° - 30°	1498.5	72.8
0° - 40°	1958.0	95.1
0° - 60°	2056.6	99.9
0° - 90°	2058.3	100.0
90° - 180°	0.0	0.0
0° - 180°	2058.3	*100.0
*Efficiency		

pf / pc / pw	80% 50%	80% 30%	80% 10%	20% 70% 50%	20% 70% 30%	20% 70% 10%	20% 50% 50%	20% 50% 30%	20% 50% 10%
0	119	119	119	116	116	116	111	111	111
1	111	108	106	109	107	105	105	103	101
2	103	99	96	102	98	95	98	95	93
3	96	92	88	95	91	87	92	89	86
4	90	85	81	89	84	80	87	83	79
5	84	79	74	83	78	74	82	77	73
6	79	73	69	78	73	69	77	72	68
7	74	68	64	74	68	64	72	67	64
8	70	64	60	69	64	60	68	63	60
9	66	60	56	66	60	56	65	60	56
10	62	57	53	62	56	53	61	56	53

Mounting Height	Inital FC Center Beam	50% beam - 54.2° Diameter	50% beam - 54.2° FC	10% beam - 77.3° Diameter	10% beam - 77.3° FC
8.0	66.7	5.6	33.4	8.8	6.7
10.0	35.9	7.7	17.9	12.0	3.6
12.0	22.4	9.7	11.2	15.2	2.2
14.0	15.3	11.8	7.6	18.4	1.5
16.0	11.1	13.8	5.5	21.6	1.1

LUMEN OUTPUT MULTIPLIER - CRI	
CRI	**FACTOR**
80 CRI	1
90 CRI	0.79

LUMEN OUTPUT MULTIPLIER - CCT	
CRI	**FACTOR**
5000 K	1.101
4000 K	1.035
3500 K	1
3000 K	0.973
2700 K	0.938

LUMEN OUTPUT MULTIPLIER - TRIM FINISH						
FINISH	**CLEAR (AR)**	**PEWTER (PR)**	**WHEAT (WTR)**	**GOLD (GR)**	**WHITE (WR/WRAMF)**	**BLACK (BR)**
Specular (LS)	1.00	0.88	0.83	0.95	N/A	N/A
Semi-specular (LSS)	0.95	0.84	0.79	0.90	N/A	N/A
Matte-diffuse (LD)	0.85	0.73	0.69	0.80	N/A	N/A
Paint	N/A	N/A	N/A	N/A	0.87	0.73

PHOTOMETRY NOTES

- Tested in accordance with IESNA LM-79-08.
- Tested to current IES and NEMA standards under stabilized laboratory conditions.
- CRI: 85 typical.

© 2010-2017 Acuity Brands Lighting, Inc. All Rights Reserved. Rev. 09/05/17. Specifications subject to change without notice.

Choose Wall Controls.
nLIGHT o ers multiple styles of wall controls – each with varying features and user experience.



Push-Button WallPod
Traditional tactile buttons and LED user feedback



Graphic WallPod
Full color touch screen provides a sophisticated look and feel

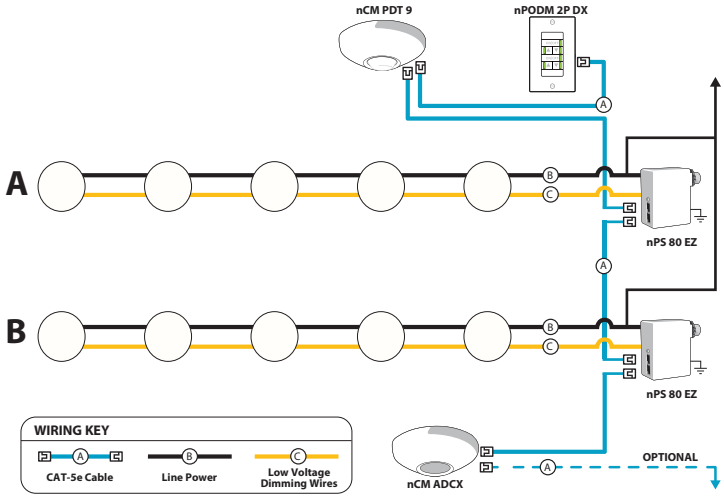

EXAMPLE
Group Fixture Control*
*Application diagram applies for fixtures with eldoLED drivers only.

nPS 80 EZ Dimming/Control Pack (qty 2 required)
nPODM 2P DX Dual On/Off/Dim Push-Button WallPod
nCM ADCX Daylight Sensor with Automatic Dimming Control
nCM PDT 9 Dual Technology Occupancy Sensor

Description: This design provides a dual on/off/dim wall station that enables manual control of the fixtures in Row A and Row B separately. Additionally, a daylight harvesting sensor is provided so the lights in row B can be configured to dim automatically when daylight is available. An occupancy sensor turns off all lights when the space is vacant.

nLight® Control Accessories:
Order as separate catalog number. Visit www.sensorswitch.com/nLight for complete listing of nLight controls.

WallPod stations	Model number
On/Off	nPODM [color]
On/Off & Raise/Lower	nPODM DX [color]
Graphic Touchscreen	nPOD GFX [color]
Photocell controls	**Model number**
Dimming	nCM ADCX

Occupancy sensors	Model number
Small motion 360°, ceiling (PIR / dual tech)	nCM 9 / nCM PDT 9
Large motion 360°, ceiling (PIR / dual tech)	nCM 10 / nCM PDT 10
Wide view (PIR / dual tech)	nWV 16 / nWV PDT 16
Wall Switch w/ Raise/Lower (PIR / dual tech)	nWSX LV DX / nWSX PDT LV DX
Cat-5 cables (plenum rated)	**Model number**
10', CAT5 10FT	CAT5 10FT J1
15', CAT5 15FT	CAT5 15FT J1

A+ Capable Luminaire

This item is an A+ capable luminaire, which has been designed and tested to provide consistent color appearance and out-of-the-box control compatibility with simple commissioning.

- All configurations of this luminaire meet the Acuity Brands' specification for chromatic consistency
- This luminaire is part of an A+ Certified solution for nLight® control networks when ordered with drivers marked by a shaded background*
- This luminaire is part of an A+ Certified solution for nLight control networks, providing advanced control functionality at the luminaire level, when selection includes driver and control options marked by a shaded background*

To learn more about A+, visit www.acuitybrands.com/aplus.

*See ordering tree for details

© 2010-2017 Acuity Brands Lighting, Inc. All Rights Reserved. Rev. 09/05/17. Specifications subject to change without notice.

FFLED18



Rectangular shaped LED floodlight designed to replace 70W Metal Halide. Patent Pending airflow technology ensures long LED and driver lifespan. Use for building facade lighting, sign lighting, LED landscape lighting and instant-on security lighting.

Color: Bronze Weight: 4.8 lbs

Project:	Type:
Prepared By:	Date:

Driver Info		LED Info	
Type:	Constant Current	Watts:	18W
120V:	0.2A	Color Temp:	5000K
208V:	0.15A	Color Accuracy:	72 CRI
240V:	0.13A	L70 Lifespan:	100000
277V:	0.11A	Lumens:	2310
Input Watts:	23W	Efficacy:	100 LPW
Efficiency:	78%		

Technical Specifications

Listings

UL Listing:

Suitable For Wet Locations. Suitable for ground mounting.

DLC Listed:

This product is on the Design Lights Consortium (DLC) Qualified Products List and is eligible for rebates from DLC Member Utilities.
DLC Product Code: P0000170B

IESNA LM-79 & LM-80 Testing:

RAB LED luminaires have been tested by an independent laboratory in accordance with IESNA LM-79 and LM-80, and have received the Department of Energy "Lighting Facts" label.

LED Characteristics

Lifespan:

100,000-hour LED lifespan based on IES LM-80 results and TM-21 calculations.

LEDs:

Multi-chip, high-output, long-life LEDs

Color Consistency:

7-step MacAdam Ellipse binning to achieve consistent fixture-to-fixture color.

Color Stability:

LED color temperature is warrantied to shift no more than 200K in CCT over a 5 year period.

Color Uniformity:

RAB's range of CCT (Correlated Color Temperature) follows the guidelines of the American National Standard for (SSL) Products, ANSI C78.377-2017.

Construction

IP Rating:

Ingress Protection rating of IP66 for dust and water

Airflow:

Airflow technology heat sink for superior cooling.

Ambient Temperature:

SuitableFor use in 40°C (104°F) ambient temperatures.

Cold Weather Starting:

Minimum starting temperature is -40°C (-40°F)

Thermal Management Housing:

Die-cast aluminum housing, lens frame and mounting arm.

Mounting:

Heavy-duty mounting arm with "O" ring seal & stainless steel screw.

Reflector:

Semi-specular anodized aluminum.

Gaskets:

High-temperature silicone gaskets

Finish:

Formulated for high-durability and long lasting color.

Green Technology:

Mercury and UV free. RoHS compliant components. Polyester powder coat finish formulated without the use of VOC or toxic heavy metals.

Optical

NEMA Type:

NEMA Beam Spread of 7H x 6V

Electrical

Driver:

Constant Current, Class 2, 100 - 277V, 50 - 60 Hz, 100 - 277VAC 0.4 Amps.

Surge Protection:

6kV

Other

Warranty:

RAB warrants that our LED products will be free from defects in materials and workmanship for a period of five (5) years from the date of delivery to the end user, including coverage of light output, color stability, driver performance and fixture finish.

Patents:

The FFLED design is protected by U.S. Pat. D643,147, Canada Pat. 140798, China Pat. ZL201130171304.1, Mexico Pat. 36757 and pending patent in Taiwan.

American Bureau of Shipping (ABS) :

For use on Mobile Offshore Drilling Units (MODU) and shipping vessels.

Equivalency:

Equivalent to 70W Metal Halide.

Buy American Act Compliance:

RAB values USA manufacturing! Upon request, RAB may be able to manufacture this product to be compliant with the Buy American Act (BAA). Please contact customer service to request a quote for the product to be made BAA compliant.

Copyright © 2018 RAB Lighting Inc. All Rights Reserved Note: Specifications are subject to change at any time without notice

FFLED18

Dimensions

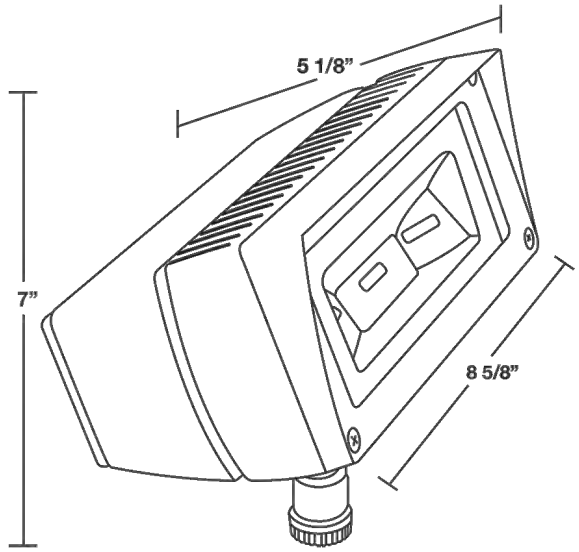

Features

- Ultra efficient LED and optical design
- Replaces 70W MH floodlights
- 100,000 hour life based on LM-80 tests
- NEMA type - 7H x 6V
- Air-flow technology heatsink
- 5-year warranty

Ordering Matrix

Family	Wattage	Mounting	Color Temp	NEMA Type	Finish	Photocell Options
FFLED	18					
	18 = 18W	**Blank** = Swivel Arm	**Blank** = 5000K (Cool) **N** = 4000K (Neutral) **Y** = 3000K (Warm)	**Blank** = 7H x 6V	**Blank** = Bronze **W** = White	**Blank** = No Option **/PC** = 120V Photocell **/PC2** = 277V Photocell **/PCS** = 120V Swivel Photocell **/PCS2** = 277V Swivel Photocell

Copyright © 2018 RAB Lighting Inc. All Rights Reserved Note: Specifications are subject to change at any time without notice

FFLED26



Rectangular shaped LED floodlight designed to replace 100W Metal Halide. Patent Pending airflow technology ensures long LED and driver lifespan. Use for building facade lighting, sign lighting, LED landscape lighting and instant-on security lighting.

Color: Bronze Weight: 12.5 lbs

Project:	Type:
Prepared By:	Date:

Driver Info		LED Info	
Type:	Constant Current	Watts:	26W
120V:	0.24A	Color Temp:	5000K
208V:	0.15A	Color Accuracy:	71 CRI
240V:	0.13A	L70 Lifespan:	100000
277V:	0.11A	Lumens:	4131
Input Watts:	29W	Efficacy:	142 LPW
Efficiency:	89%		

Technical Specifications

Listings

UL Listing:

Suitable For Wet Locations. Suitable for mounting within 1.2M(4FT) of the ground.

DLC Listed:

This product is listed by Design Lights Consortium (DLC) as an ultra-efficient premium product that qualifies for the highest tier of rebates from DLC Member Utilities.
DLC Product Code: PAXKT39NP

IESNA LM-79 & LM-80 Testing:

RAB LED luminaires have been tested by an independent laboratory in accordance with IESNA LM-79 and LM-80, and have received the Department of Energy "Lighting Facts" label.

LED Characteristics

Lifespan:

100,000-hour LED lifespan based on IES LM-80 results and TM-21 calculations.

LEDs:

Multi-chip 26W high output long life LED

Color Consistency:

7-step MacAdam Ellipse binning to achieve consistent fixture-to-fixture color.

Color Stability:

LED color temperature is warrantied to shift no more than 200K in CCT over a 5 year period.

Color Uniformity:

RAB's range of CCT (Correlated Color Temperature) follows the guidelines of the American National Standard for (SSL) Products, ANSI C78.377-2017.

Construction

IP Rating:

Ingress Protection rating of IP66 for dust and water

Ambient Temperature:

SuitableFor use in 40°C (104°F) ambient temperatures.

Cold Weather Starting:

Minimum starting temperature is -40°C (-40°F)

Thermal Management Housing:

Superior heat sinking with external Air-Flow fins.

Housing:

Die-cast aluminum housing, lens frame and mounting arm.

Threaded Size:

1/2" threaded arm.

Mounting:

Heavy-duty mounting arm with "O" ring seal & stainless steel screw.

Effective Projected Area:

EPA = 0.65

Reflector:

Specular polycarbonate

Gaskets:

High-temperature silicone gaskets

Finish:

Formulated for high-durability and long lasting color.

Green Technology:

Mercury and UV free. RoHS compliant components. Polyester powder coat finish formulated without the use of VOC or toxic heavy metals.

Optical

NEMA Type:

NEMA Beam Spread of 7H x 6V

Electrical

THD:

8.2% at 120V, 17.7% at 277V

Power Factor:

99.1% at 120V, 90.7% at 277V

Driver:

Constant Current, Class 2, 100-277V, 50/60 Hz, 6 kV surge protection, 120V: 0.24A, 208V: 0.15A, 240V: 0.13A, 277V: 0.11A.

Other

Warranty:

RAB warrants that our LED products will be free from defects in materials and workmanship for a period of five (5) years from the date of delivery to the end user, including coverage of light output, color stability, driver performance and fixture finish.

Patents:

The FFLED design is protected by U.S. Pat. D643,147, Canada Pat. 140798, China Pat. ZL201130171304.1, Mexico Pat. 36757 and pending patent in Taiwan.

Copyright © 2018 RAB Lighting Inc. All Rights Reserved Note: Specifications are subject to change at any time without notice

Technical Specifications (continued)

Other

Equivalency:

Equivalent to 100W Metal Halide.

Buy American Act Compliance:

RAB values USA manufacturing! Upon request, RAB may be able to manufacture this product to be compliant with the Buy American Act (BAA). Please contact customer service to request a quote for the product to be made BAA compliant.

Dimensions

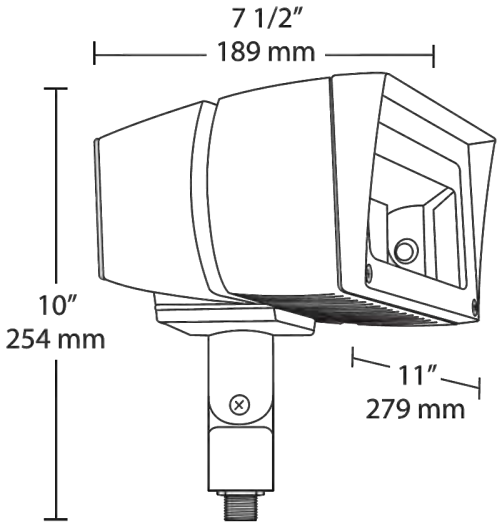

Features

- Ultra efficient LED and optical design
- Replaces 100W MH floodlights
- 100,000 hour life based on LM-80 tests
- Air-flow technology heatsink
- 5-year warranty

Ordering Matrix

Family	Wattage	Mounting	Color Temp	NEMA Type	Finish	Driver	Photocell Options
FFLED	26						
	80 = 80W **52** = 52W **39** = 39W **26** = 26W	**Blank** = Swivel Arm **SF** = Slipfitter **T** = Trunnion	**Blank** = 5000K (Cool) **N** = 4000K (Neutral) **Y** = 3000K (Warm)	**Blank** = 7H x 6V **B55** = 5H x 5V **B44** = 4H x 4V	**Blank** = Bronze **W** = White	**Blank** = On/Off **/D10** = 0-10V Dimming **/480** = 480V On/Off (not available for 80W models)	**Blank** = No Option **/PC** = 120V Photocell **/PC2** = 277V Photocell **/PCS** = 120V Swivel Photocell **/PCS2** = 277V Swivel Photocell **/PCS4** = 480V Swivel Photocell

Copyright © 2018 RAB Lighting Inc. All Rights Reserved Note: Specifications are subject to change at any time without notice

FFLED26T



Rectangular shaped LED floodlight designed to replace 100W Metal Halide. Patent Pending airflow technology ensures long LED and driver lifespan. Use for building facade lighting, sign lighting, LED landscape lighting and instant-on security lighting.

Color: Bronze Weight: 14.2 lbs

Project:	Type:
Prepared By:	Date:

Driver Info		LED Info	
Type:	Constant Current	Watts:	26W
120V:	0.24A	Color Temp:	5000K
208V:	0.15A	Color Accuracy:	71 CRI
240V:	0.13A	L70 Lifespan:	100000
277V:	0.11A	Lumens:	4131
Input Watts:	29W	Efficacy:	142 LPW
Efficiency:	89%		

Technical Specifications

Listings

UL Listing:

Suitable For Wet Locations. Suitable for mounting within 1.2M(4FT) of the ground.

DLC Listed:

This product is listed by Design Lights Consortium (DLC) as an ultra-efficient premium product that qualifies for the highest tier of rebates from DLC Member Utilities.
DLC Product Code: PAXKT39NP

IESNA LM-79 & LM-80 Testing:

RAB LED luminaires have been tested by an independent laboratory in accordance with IESNA LM-79 and LM-80, and have received the Department of Energy "Lighting Facts" label.

LED Characteristics

Lifespan:

100,000-hour LED lifespan based on IES LM-80 results and TM-21 calculations.

LEDs:

Multi-chip 26W high output long life LED

Color Consistency:

7-step MacAdam Ellipse binning to achieve consistent fixture-to-fixture color.

Color Stability:

LED color temperature is warrantied to shift no more than 200K in CCT over a 5 year period.

Color Uniformity:

RAB's range of CCT (Correlated Color Temperature) follows the guidelines of the American National Standard for (SSL) Products, ANSI C78.377-2017.

Construction

IP Rating:

Ingress Protection rating of IP66 for dust and water

Ambient Temperature:

SuitableFor use in 40°C (104°F) ambient temperatures.

Cold Weather Starting:

Minimum starting temperature is -40°C (-40°F)

Thermal Management Housing:

Superior heat sinking with external Air-Flow fins.

Housing:

Die-cast aluminum housing, lens frame and mounting arm.

Mounting:

Heavy-duty Trunnion mount with stainless steel hardware.

Effective Projected Area:

EPA = 0.65

Reflector:

Specular polycarbonate

Gaskets:

High-temperature silicone gaskets

Finish:

Formulated for high-durability and long lasting color.

Green Technology:

Mercury and UV free. RoHS compliant components. Polyester powder coat finish formulated without the use of VOC or toxic heavy metals.

Threaded Size:

1/2" threaded arm.

Optical

NEMA Type:

NEMA Beam Spread of 7H x 6V

Electrical

THD:

8.2% at 120V, 17.7% at 277V

Power Factor:

99.1% at 120V, 90.7% at 277V

Driver:

Constant Current, Class 2, 100-277V, 50/60 Hz, 6 kV surge protection, 120V: 0.24A, 208V: 0.15A, 240V: 0.13A, 277V: 0.11A.

Other

Warranty:

RAB warrants that our LED products will be free from defects in materials and workmanship for a period of five (5) years from the date of delivery to the end user, including coverage of light output, color stability, driver performance and fixture finish.

Patents:

The FFLED design is protected by U.S. Pat. D643,147, Canada Pat. 140798, China Pat. ZL201130171304.1, Mexico Pat. 36757 and pending patent in Taiwan.

Copyright © 2018 RAB Lighting Inc. All Rights Reserved Note: Specifications are subject to change at any time without notice

Technical Specifications (continued)

Other

Equivalency:

Equivalent to 100W Metal Halide.

Buy American Act Compliance:

RAB values USA manufacturing! Upon request, RAB may be able to manufacture this product to be compliant with the Buy American Act (BAA). Please contact customer service to request a quote for the product to be made BAA compliant.

Dimensions

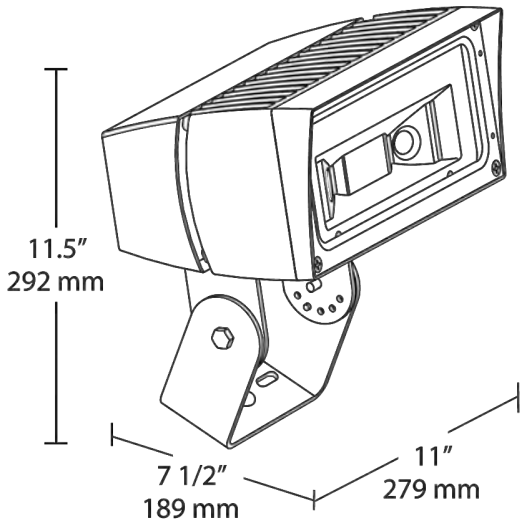

Features

- Ultra efficient LED and optical design
- Replaces 100W MH floodlights
- 100,000 hour life based on LM-80 tests
- Air-flow technology heatsink
- 5-year warranty

Ordering Matrix

Family	Wattage	Mounting	Color Temp	NEMA Type	Finish	Driver	Photocell Options
FFLED	26	T					
	80 = 80W **52** = 52W **39** = 39W **26** = 26W	**Blank** = Swivel Arm **SF** = Slipfitter **T** = Trunnion	**Blank** = 5000K (Cool) **N** = 4000K (Neutral) **Y** = 3000K (Warm)	**Blank** = 7H x 6V **B55** = 5H x 5V **B44** = 4H x 4V	**Blank** = Bronze **W** = White	**Blank** = On/Off **/D10** = 0-10V Dimming **/480** = 480V On/Off (not available for 80W models)	**Blank** = No Option **/PC** = 120V Photocell **/PC2** = 277V Photocell **/PCS** = 120V Swivel Photocell **/PCS2** = 277V Swivel Photocell **/PCS4** = 480V Swivel Photocell

Copyright © 2018 RAB Lighting Inc. All Rights Reserved Note: Specifications are subject to change at any time without notice

FFLED39T



Rectangular shaped LED floodlight designed to replace 150W Metal Halide. Patent Pending airflow technology ensures long LED and driver lifespan. Use for building facade lighting, sign lighting, LED landscape lighting and instant-on security lighting.

Color: Bronze Weight: 12.5 lbs

Project:	Type:
Prepared By:	Date:

Driver Info		LED Info	
Type:	Constant Current	Watts:	39W
120V:	0.35A	Color Temp:	5000K
208V:	0.20A	Color Accuracy:	71 CRI
240V:	0.18A	L70 Lifespan:	100000
277V:	0.15A	Lumens:	5666
Input Watts:	42W	Efficacy:	136 LPW
Efficiency:	93%		

Technical Specifications

Listings

UL Listing:

Suitable For Wet Locations. Suitable for ground mounting.

DLC Listed:

This product is on the Design Lights Consortium (DLC) Qualified Products List and is eligible for rebates from DLC Member Utilities.
DLC Product Code: P00001709

IESNA LM-79 & LM-80 Testing:

RAB LED luminaires have been tested by an independent laboratory in accordance with IESNA LM-79 and LM-80, and have received the Department of Energy "Lighting Facts" label.

LED Characteristics

Lifespan:

100,000-hour LED lifespan based on IES LM-80 results and TM-21 calculations.

LEDs:

Two multi-chip, 26Watt high performance LEDs.

Color Consistency:

7-step MacAdam Ellipse binning to achieve consistent fixture-to-fixture color.

Color Stability:

LED color temperature is warrantied to shift no more than 200K in CCT over a 5 year period.

Color Uniformity:

RAB's range of CCT (Correlated Color Temperature) follows the guidelines of the American National Standard for (SSL) Products, ANSI C78.377-2017.

Construction

IP Rating:

Ingress Protection rating of IP66 for dust and water

Ambient Temperature:

SuitableFor use in 40°C (104°F) ambient temperatures.

Cold Weather Starting:

Minimum starting temperature is -40°C (-40°F)

Thermal Management Housing:

Superior heat sinking with external Air-Flow fins.

Mounting:

Heavy-duty Trunnion mount with stainless steel hardware.

Effective Projected Area:

EPA = 0.65

Reflector:

Specular vacuum-metallized polycarbonate

Gaskets:

High-temperature silicone gaskets

Finish:

Formulated for high-durability and long lasting color.

Green Technology:

Mercury and UV free. RoHS compliant components. Polyester powder coat finish formulated without the use of VOC or toxic heavy metals.

Threaded Size:

1/2" threaded arm.

Optical

NEMA Type:

NEMA Beam Spread of 7H x 6V

Electrical

Driver:

Constant Current, Class 2, 1050mA, 100-277V, 50/60Hz, 0.6A, Power Factor 99%

Surge Protection:

4kV

Other

Warranty:

RAB warrants that our LED products will be free from defects in materials and workmanship for a period of five (5) years from the date of delivery to the end user, including coverage of light output, color stability, driver performance and fixture finish.

Patents:

The FFLED design is protected by U.S. Pat. D643,147, Canada Pat. 140798, China Pat. ZL201130171304.1, Mexico Pat. 36757 and pending patent in Taiwan.

American Bureau of Shipping (ABS) :

For use on Mobile Offshore Drilling Units (MODU) and shipping vessels.

Equivalency:

Equivalent to 150W Metal Halide.

Copyright © 2018 RAB Lighting Inc. All Rights Reserved Note: Specifications are subject to change at any time without notice

Technical Specifications (continued)

Other

Buy American Act Compliance:

RAB values USA manufacturing! Upon request, RAB may be able to manufacture this product to be compliant with the Buy American Act (BAA). Please contact customer service to request a quote for the product to be made BAA compliant.

Dimensions

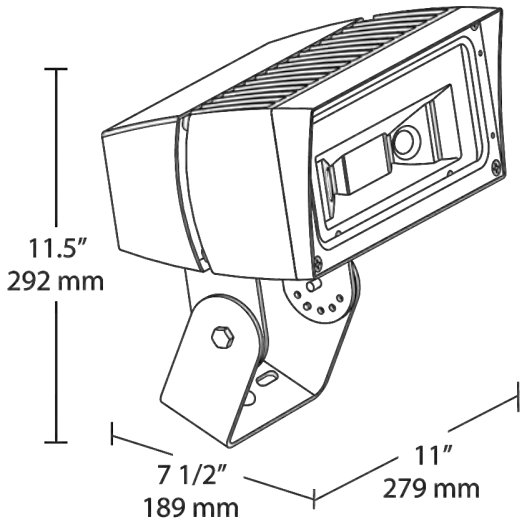

Features

- Ultra efficient LED and optical design
- Replaces 150W MH floodlights
- 100,000 hour life based on LM-80 tests
- Air-flow technology heatsink
- 5-year warranty

Ordering Matrix

Family	Wattage	Mounting	Color Temp	NEMA Type	Finish	Driver	Photocell Options
FFLED	39	T					
	80 = 80W **52** = 52W **39** = 39W **26** = 26W	**Blank** = Swivel Arm **SF** = Slipfitter **T** = Trunnion	**Blank** = 5000K (Cool) **N** = 4000K (Neutral) **Y** = 3000K (Warm)	**Blank** = 7H x 6V **B55** = 5H x 5V **B44** = 4H x 4V	**Blank** = Bronze **W** = White	**Blank** = On/Off **/D10** = 0-10V Dimming **/480** = 480V On/Off (not available for 80W models)	**Blank** = No Option **/PC** = 120V Photocell **/PC2** = 277V Photocell **/PCS** = 120V Swivel Photocell **/PCS2** = 277V Swivel Photocell **/PCS4** = 480V Swivel Photocell

Copyright © 2018 RAB Lighting Inc. All Rights Reserved Note: Specifications are subject to change at any time without notice

FFLED52



Rectangular shaped LED floodlight designed to replace 175W Metal Halide. Patent Pending airflow technology ensures long LED and driver lifespan. Use for building facade lighting, sign lighting, LED landscape lighting and instant-on security lighting.

Color: Bronze Weight: 12.5 lbs

Project:	Type:
Prepared By:	Date:

Driver Info		LED Info	
Type:	Constant Current	Watts:	52W
120V:	0.45A	Color Temp:	5000K
208V:	0.27A	Color Accuracy:	71 CRI
240V:	0.24A	L70 Lifespan:	100000
277V:	0.21A	Lumens:	6935
Input Watts:	55W	Efficacy:	125 LPW
Efficiency:	94%		

Technical Specifications

Listings

UL Listing:

Suitable For Wet Locations. Suitable for mounting within 1.2M(4FT) of the ground.

DLC Listed:

This product is on the Design Lights Consortium (DLC) Qualified Products List and is eligible for rebates from DLC Member Utilities.
DLC Product Code: P2CRRKPHQ

IESNA LM-79 & LM-80 Testing:

RAB LED luminaires have been tested by an independent laboratory in accordance with IESNA LM-79 and LM-80, and have received the Department of Energy "Lighting Facts" label.

LED Characteristics

Lifespan:

100,000-hour LED lifespan based on IES LM-80 results and TM-21 calculations.

LEDs:

Two multi-chip, 26Watt high performance LEDs.

Color Consistency:

7-step MacAdam Ellipse binning to achieve consistent fixture-to-fixture color.

Color Stability:

LED color temperature is warrantied to shift no more than 200K in CCT over a 5 year period.

Color Uniformity:

RAB's range of CCT (Correlated Color Temperature) follows the guidelines of the American National Standard for (SSL) Products, ANSI C78.377-2017.

Construction

IP Rating:

Ingress Protection rating of IP66 for dust and water

Ambient Temperature:

SuitableFor use in 40°C (104°F) ambient temperatures.

Cold Weather Starting:

Minimum starting temperature is -40°C (-40°F)

Thermal Management Housing:

Superior heat sinking with external Air-Flow fins.

Housing:

Die-cast aluminum housing, lens frame and mounting arm.

Threaded Size:

1/2" threaded arm.

Mounting:

Heavy-duty mounting arm with "O" ring seal & stainless steel screw.

Effective Projected Area:

EPA = 0.65

Reflector:

Specular polycarbonate

Gaskets:

High-temperature silicone gaskets

Finish:

Formulated for high-durability and long lasting color.

Green Technology:

Mercury and UV free. RoHS compliant components. Polyester powder coat finish formulated without the use of VOC or toxic heavy metals.

Optical

NEMA Type:

NEMA Beam Spread of 7H x 6V

Electrical

Driver:

Constant Current, Class 2, 100-277V, 50/60 Hz, 4 kV surge protection, 120V: 0.45A, 208V: 0.27A, 240V: 0.24A, 277V: 0.21A

Other

Warranty:

RAB warrants that our LED products will be free from defects in materials and workmanship for a period of five (5) years from the date of delivery to the end user, including coverage of light output, color stability, driver performance and fixture finish.

Patents:

The FFLED design is protected by U.S. Pat. D643,147, Canada Pat. 140798, China Pat. ZL201130171304.1, Mexico Pat. 36757 and pending patent in Taiwan.

American Bureau of Shipping (ABS) :

For use on Mobile Offshore Drilling Units (MODU) and shipping vessels.

Equivalency:

Equivalent to 175W Metal Halide.

Copyright © 2018 RAB Lighting Inc. All Rights Reserved Note: Specifications are subject to change at any time without notice

Technical Specifications (continued)

Other

Buy American Act Compliance:

RAB values USA manufacturing! Upon request, RAB may be able to manufacture this product to be compliant with the Buy American Act (BAA). Please contact customer service to request a quote for the product to be made BAA compliant.

Dimensions

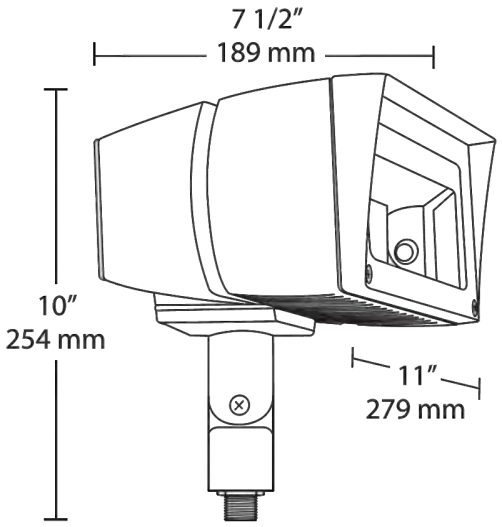

Features

- Ultra efficient LED and optical design
- Replaces 175W MH floodlights
- 100,000 hour life based on LM-80 tests
- Air-flow technology heatsink
- 5-year warranty

Ordering Matrix

Family	Wattage	Mounting	Color Temp	NEMA Type	Finish	Driver	Photocell Options
FFLED	52						
	80 = 80W **52** = 52W **39** = 39W **26** = 26W	**Blank** = Swivel Arm **SF** = Slipfitter **T** = Trunnion	**Blank** = 5000K (Cool) **N** = 4000K (Neutral) **Y** = 3000K (Warm)	**Blank** = 7H x 6V **B55** = 5H x 5V **B44** = 4H x 4V	**Blank** = Bronze **W** = White	**Blank** = On/Off **/D10** = 0-10V Dimming **/480** = 480V On/Off (not available for 80W models)	**Blank** = No Option **/PC** = 120V Photocell **/PC2** = 277V Photocell **/PCS** = 120V Swivel Photocell **/PCS2** = 277V Swivel Photocell **/PCS4** = 480V Swivel Photocell

Copyright © 2018 RAB Lighting Inc. All Rights Reserved Note: Specifications are subject to change at any time without notice

FXLED125SF



Ultra high output, high efficiency LED floodlight with wide NEMA type 6H x 6V beam spread. Patent Pending airflow technology ensures long LED and driver lifespan. Use for general and security lighting for large areas, building facades, signs and landscapes.

Color: Bronze

Weight: 25.0 lbs

Project:	Type:
Prepared By:	Date:

Driver Info

Type:	Constant Current
120V:	1.12A
208V:	0.70A
240V:	0.61A
277V:	0.52A
Input Watts:	132W
Efficiency:	94%

LED Info

Watts:	125W
Color Temp:	5000K
Color Accuracy:	72 CRI
L70 Lifespan:	100000
Lumens:	16951
Efficacy:	128 LPW

Technical Specifications

Listings

UL Listing:

Suitable for wet locations. Suitable for ground mounting.

IESNA LM-79 & LM-80 Testing:

RAB LED luminaries have been tested by an independent laboratory in accordance with IESNA LM-79 and LM-80, and have been received the Department of Energy "Lighting Facts" label.

DLC Listed:

This product is on the Design Lights Consortium (DLC) Qualified Products List and is eligible for rebates from DLC Member Utilities.
DLC Product Code: P0000176D

LED Characteristics

Lifespan:

100,000-hour LED lifespan based on IES LM-80 results and TM-21 calculations.

LEDs:

Multip-chip, high-output, long-life LEDs

Color Consistency:

7-step MacAdam Ellipse binning to achieve consistent fixture-to-fixture color.

Color Stability:

LED color temperature is warrantied to shift no more than 200K in CCT over a 5 year period.

Color Uniformity:

RAB's range of CCT (Correlated Color Temperature) follows the guidelines of the American National Standard for Specifications for the Chromaticity of Solid State Lighting (SSL) Products, ANSI C78.377-2017.

Construction

IP Rating:

Ingress Protection rating of IP66 for dust and water

Maximum Ambient Temperature:

Suitable for use in 40°C (104°F) ambient temperatures

Effective Projected Area:

EPA = 2

Cold Weather Starting:

Minimum starting temperature is -40°C (-40°F)

Thermal Management:

Superior thermal management with external "Air-Flow" fins.

Lens:

Tempered glass lens.

Housing:

Die-cast aluminum housing and door frame

Mounting:

Heavy-duty Slipfitter for 2 3/8"OD pipe.

Reflector:

Specular, vacuum-metalized polycarbonate

Gaskets:

High-temperature silicone gaskets

Finish:

Formulated for high-durability and long lasting color.

Green Technology:

Mercury and UV free. RoHS compliant components. Polyester powder coat finish formulated without the use of VOC or toxic heavy metals.

Electrical

Drivers:

Two Drivers, Constant Current, Class 2, 1750mA, 100-277V, 50/60Hz, 1.1A, Power Factor 99%

THD:

5.1% at 120V, 16.5% at 277V

Power Factor:

99.4% at 120V, 91.8% at 277V

Optical

NEMA Type:

NEMA Beam Spread of 6H x 6V

Sensor Characteristics

Field & Beam Angles:

Horizontal Beam Angle (50%): 91.8°, Vertical Beam Angle (50%): 73.5° Horizontal Field Angle (10%): 121.0°, Vertical Field Angle (10%): 108.0°

Other

Warranty:

RAB warrants that our LED products will be free from defects in materials and workmanship for a period of five (5) years from the date of delivery to the end user, including coverage of light output, color stability, driver performance and fixture finish.

Copyright © 2018 RAB Lighting Inc. All Rights Reserved Note: Specifications are subject to change at any time without notice

Technical Specifications (continued)

Other

Patents:

The design of FXLED125 is protected by patents pending in US, Canada, China, Taiwan and Mexico.

Replacement:

Replaces 320W Metal Halide

Buy American Act Compliance:

RAB values USA manufacturing! Upon request, RAB may be able to manufacture this product to be compliant with the Buy American Act (BAA). Please contact customer service to request a quote for the product to be made BAA compliant.

Dimensions

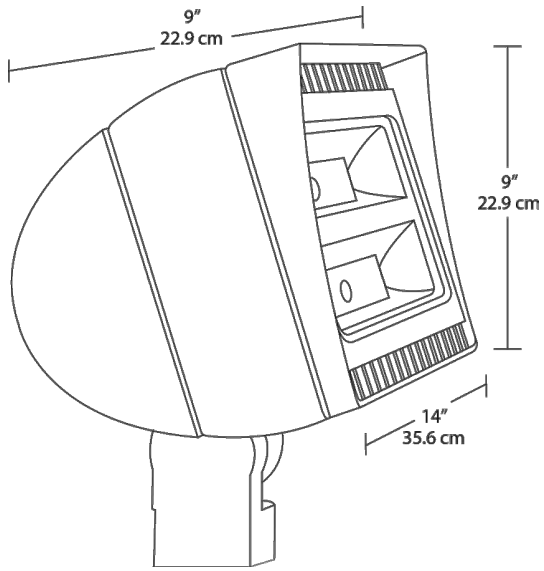

Features

- 66% energy cost savings vs. HID
- NEMA Type - 6H x 6V
- Air-Flow technology heat dissipation
- 100,000-hour LED lifespan
- 5-year warranty

Ordering Matrix

Family	Wattage	Mounting	Color Temp	Finish	Driver	Photocell Options
FXLED	125	SF				
	78 = 78W **105** = 105W **125** = 125W **150** = 150W	**SF** = Slipfitter **T** = Trunnion	**Blank** = 5000K (Cool) **N** = 4000K (Neutral) **Y** = 3000K (Warm)	**Blank** = Bronze **W** = White	**/480** = 480V **/BL** = Bi-Level (Slipfitter models only) **/D10** = 0-10V Dimming (78W, 125W and 150W only)	**Blank** = No Option **/PCT** = 100-277V Twistlock **/PCT4** = 480V Twistlock

Copyright © 2018 RAB Lighting Inc. All Rights Reserved Note: Specifications are subject to change at any time without notice

FXLED125T



Ultra high output, high efficiency LED floodlight with wide NEMA type 6H x 6V beam spread. Patent Pending airflow technology ensures long LED and driver lifespan. Use for general and security lighting for large areas, building facades, signs and landscapes.

Color: Bronze Weight: 25.0 lbs

Project:	Type:
Prepared By:	Date:

Driver Info		LED Info	
Type:	Constant Current	Watts:	125W
120V:	1.12A	Color Temp:	5000K
208V:	0.70A	Color Accuracy:	72 CRI
240V:	0.61A	L70 Lifespan:	100000
277V:	0.52A	Lumens:	16951
Input Watts:	132W	Efficacy:	128 LPW
Efficiency:	94%		

Technical Specifications

Listings

UL Listing:

Suitable for wet locations. Suitable for ground mounting.

IESNA LM-79 & LM-80 Testing:

RAB LED luminaries have been tested by an independent laboratory in accordance with IESNA LM-79 and LM-80, and have been received the Department of Energy "Lighting Facts" label.

DLC Listed:

This product is on the Design Lights Consortium (DLC) Qualified Products List and is eligible for rebates from DLC Member Utilities.
DLC Product Code: P0000176D

LED Characteristics

Lifespan:

100,000-hour LED lifespan based on IES LM-80 results and TM-21 calculations.

LEDs:

Multip-chip, high-output, long-life LEDs

Color Consistency:

7-step MacAdam Ellipse binning to achieve consistent fixture-to-fixture color.

Color Stability:

LED color temperature is warrantied to shift no more than 200K in CCT over a 5 year period.

Color Uniformity:

RAB's range of CCT (Correlated Color Temperature) follows the guidelines of the American National Standard for Specifications for the Chromaticity of Solid State Lighting (SSL) Products, ANSI C78.377-2017.

Construction

IP Rating:

Ingress Protection rating of IP66 for dust and water

Maximum Ambient Temperature:

Suitable for use in 40°C (104°F) ambient temperatures

Effective Projected Area:

EPA = 2

Cold Weather Starting:

Minimum starting temperature is -40°C (-40°F)

Thermal Management:

Superior thermal management with external "Air-Flow" fins.

Lens:

Tempered glass lens.

Housing:

Die-cast aluminum housing and door frame

Mounting:

Heavy-duty Trunnion mount with stainless steel hardware

Reflector:

Specular, vacuum-metalized polycarbonate

Gaskets:

High-temperature silicone gaskets

Finish:

Formulated for high-durability and long lasting color.

Green Technology:

Mercury and UV free. RoHS compliant components. Polyester powder coat finish formulated without the use of VOC or toxic heavy metals.

Electrical

Drivers:

Two Drivers, Constant Current, Class 2, 1750mA, 100-277V, 50/60Hz, 1.1A, Power Factor 99%

THD:

5.1% at 120V, 16.5% at 277V

Power Factor:

99.4% at 120V, 91.8% at 277V

Optical

NEMA Type:

NEMA Beam Spread of 6H x 6V

Sensor Characteristics

Field & Beam Angles:

Horizontal Beam Angle (50%): 91.8°, Vertical Beam Angle (50%): 73.5° Horizontal Field Angle (10%): 121.0°, Vertical Field Angle (10%): 108.0°

Other

Warranty:

RAB warrants that our LED products will be free from defects in materials and workmanship for a period of five (5) years from the date of delivery to the end user, including coverage of light output, color stability, driver performance and fixture finish.

Copyright © 2018 RAB Lighting Inc. All Rights Reserved Note: Specifications are subject to change at any time without notice

Technical Specifications (continued)

Other

Patents:

The design of FXLED125 is protected by patents pending in US, Canada, China, Taiwan and Mexico.

Replacement:

Replaces 320W Metal Halide

Buy American Act Compliance:

RAB values USA manufacturing! Upon request, RAB may be able to manufacture this product to be compliant with the Buy American Act (BAA). Please contact customer service to request a quote for the product to be made BAA compliant.

Dimensions

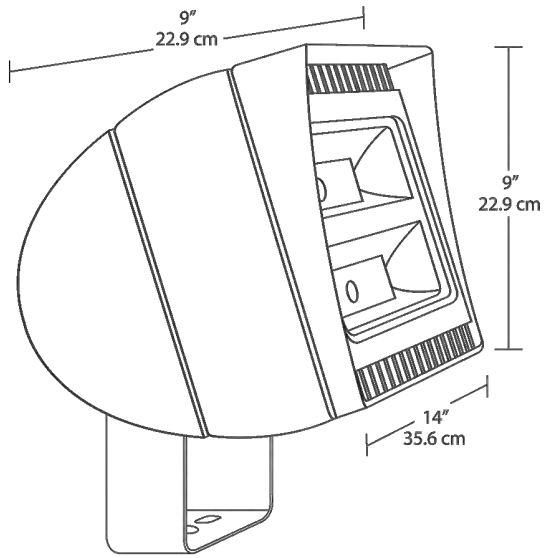

Features

- 66% energy cost savings vs. HID
- NEMA Type - 6H x 6V
- Air-Flow technology heat dissipation
- 100,000-hour LED lifespan
- 5-year warranty

Ordering Matrix

Family	Wattage	Mounting	Color Temp	Finish	Driver	Photocell Options
FXLED	125	T				
	78 = 78W **105** = 105W **125** = 125W **150** = 150W	**SF** = Slipfitter **T** = Trunnion	**Blank** = 5000K (Cool) **N** = 4000K (Neutral) **Y** = 3000K (Warm)	**Blank** = Bronze **W** = White	**/480** = 480V **/BL** = Bi-Level (Slipfitter models only) **/D10** = 0-10V Dimming (78W, 125W and 150W only)	**Blank** = No Option **/PCT** = 100-277V Twistlock **/PCT4** = 480V Twistlock

Copyright © 2018 RAB Lighting Inc. All Rights Reserved Note: Specifications are subject to change at any time without notice

FXLED150SF



Ultra high output, high efficiency LED floodlight with wide NEMA type 6H x 6V beam spread. Patent Pending airflow technology ensures long LED and driver lifespan. Use for general and security lighting for large areas, building facades, signs and landscapes.

Color: Bronze

Weight: 25.0 lbs

Project:	Type:
Prepared By:	Date:

Driver Info		LED Info	
Type:	Constant Current	Watts:	150W
120V:	1.31A	Color Temp:	5000K
208V:	0.80A	Color Accuracy:	72 CRI
240V:	0.69A	L70 Lifespan:	100000
277V:	0.60A	Lumens:	18755
Input Watts:	154W	Efficacy:	122 LPW
Efficiency:	97%		

Technical Specifications

Listings

UL Listing:

Suitable for wet locations. Suitable for ground mounting.

IESNA LM-79 & LM-80 Testing:

RAB LED luminaries have been tested by an independent laboratory in accordance with IESNA LM-79 and LM-80, and have been received the Department of Energy "Lighting Facts" label.

DLC Listed:

This product is on the Design Lights Consortium (DLC) Qualified Products List and is eligible for rebates from DLC Member Utilities.
DLC Product Code: P0000173K

LED Characteristics

Lifespan:

100,000-hour LED lifespan based on IES LM-80 results and TM-21 calculations.

LEDs:

Multip-chip, high-output, long-life LEDs

Color Consistency:

7-step MacAdam Ellipse binning to achieve consistent fixture-to-fixture color.

Color Stability:

LED color temperature is warrantied to shift no more than 200K in CCT over a 5 year period.

Color Uniformity:

RAB's range of CCT (Correlated Color Temperature) follows the guidelines of the American National Standard for Specifications for the Chromaticity of Solid State Lighting (SSL) Products, ANSI C78.377-2017.

Construction

IP Rating:

Ingress Protection rating of IP66 for dust and water

Maximum Ambient Temperature:

Suitable for use in 40°C (104°F) ambient temperatures

Effective Projected Area:

EPA = 2

Cold Weather Starting:

Minimum starting temperature is -40°C (-40°F)

Thermal Management:

Superior thermal management with external "Air-Flow" fins.

Lens:

Tempered glass lens.

Housing:

Die-cast aluminum housing and door frame

Mounting:

Heavy-duty Slipfitter for 2 3/8"OD pipe.

Reflector:

Specular, vacuum-metalized polycarbonate

Gaskets:

High-temperature silicone gaskets

Finish:

Formulated for high-durability and long lasting color.

Green Technology:

Mercury and UV free. RoHS compliant components. Polyester powder coat finish formulated without the use of VOC or toxic heavy metals.

Electrical

Drivers:

Two Drivers, Constant Current, Class 2, 2000mA, 100-277V, 50-60Hz, Power Factor 99%

THD:

4.9% at 120V, 13.9% at 277V

Power Factor:

99.5% at 120V, 93.7% at 277V

Optical

NEMA Type:

NEMA Beam Spread of 6H x 6V

Sensor Characteristics

Field & Beam Angles:

Horizontal Beam Angle (50%): 91.8°, Vertical Beam Angle (50%): 73.5° Horizontal Field Angle (10%): 121.0°, Vertical Field Angle (10%): 108.0°

Other

Warranty:

RAB warrants that our LED products will be free from defects in materials and workmanship for a period of five (5) years from the date of delivery to the end user, including coverage of light output, color stability, driver performance and fixture finish.

Copyright © 2018 RAB Lighting Inc. All Rights Reserved Note: Specifications are subject to change at any time without notice

Technical Specifications (continued)

Other

Patents:

The design of FXLED150 is protected by patents pending in US, Canada, China, Taiwan and Mexico.

American Bureau of Shipping (ABS) :

For use on Mobile Offshore Drilling Units (MODU) and shipping vessels.

Replacement:

Replaces 400W Metal Halide

Buy American Act Compliance:

RAB values USA manufacturing! Upon request, RAB may be able to manufacture this product to be compliant with the Buy American Act (BAA). Please contact customer service to request a quote for the product to be made BAA compliant.

Dimensions

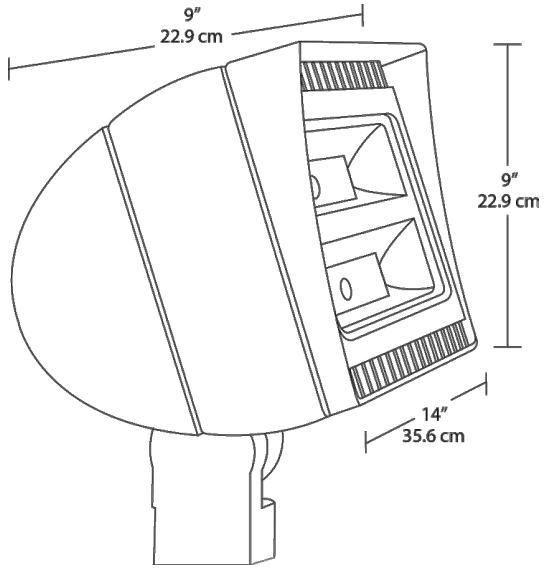

Features

66% energy cost savings vs. HID

NEMA Type - 6H x 6V

Air-Flow technology heat dissipation

100,000-hour LED lifespan

5-year warranty

Ordering Matrix

Family	Wattage	Mounting	Color Temp	Finish	Driver	Photocell Options
FXLED	150	SF				
	78 = 78W **105** = 105W **125** = 125W **150** = 150W	**SF** = Slipfitter **T** = Trunnion	**Blank** = 5000K (Cool) **N** = 4000K (Neutral) **Y** = 3000K (Warm)	**Blank** = Bronze **W** = White	**/480** = 480V **/BL** = Bi-Level (Slipfitter models only) **/D10** = 0-10V Dimming (78W, 125W and 150W only)	**Blank** = No Option **/PCT** = 100-277V Twistlock **/PCT4** = 480V Twistlock

Copyright © 2018 RAB Lighting Inc. All Rights Reserved Note: Specifications are subject to change at any time without notice

FXLED150T



Ultra high output, high efficiency LED floodlight with wide NEMA type 6H x 6V beam spread. Patent Pending airflow technology ensures long LED and driver lifespan. Use for general and security lighting for large areas, building facades, signs and landscapes.

Color: Bronze Weight: 25.0 lbs

Project:	Type:
Prepared By:	Date:

Driver Info

Type:	Constant Current
120V:	1.31A
208V:	0.80A
240V:	0.69A
277V:	0.60A
Input Watts:	154W
Efficiency:	97%

LED Info

Watts:	150W
Color Temp:	5000K
Color Accuracy:	72 CRI
L70 Lifespan:	100000
Lumens:	18755
Efficacy:	122 LPW

Technical Specifications

Listings

UL Listing:

Suitable for wet locations. Suitable for ground mounting.

IESNA LM-79 & LM-80 Testing:

RAB LED luminaries have been tested by an independent laboratory in accordance with IESNA LM-79 and LM-80, and have been received the Department of Energy "Lighting Facts" label.

DLC Listed:

This product is on the Design Lights Consortium (DLC) Qualified Products List and is eligible for rebates from DLC Member Utilities.
DLC Product Code: P0000173K

LED Characteristics

Lifespan:

100,000-hour LED lifespan based on IES LM-80 results and TM-21 calculations.

LEDs:

Multip-chip, high-output, long-life LEDs

Color Consistency:

7-step MacAdam Ellipse binning to achieve consistent fixture-to-fixture color.

Color Stability:

LED color temperature is warrantied to shift no more than 200K in CCT over a 5 year period.

Color Uniformity:

RAB's range of CCT (Correlated Color Temperature) follows the guidelines of the American National Standard for Specifications for the Chromaticity of Solid State Lighting (SSL) Products, ANSI C78.377-2017.

Construction

IP Rating:

Ingress Protection rating of IP66 for dust and water

Maximum Ambient Temperature:

Suitable for use in 40°C (104°F) ambient temperatures

Effective Projected Area:

EPA = 2

Cold Weather Starting:

Minimum starting temperature is -40°C (-40°F)

Thermal Management:

Superior thermal management with external "Air-Flow" fins.

Lens:

Tempered glass lens.

Housing:

Die-cast aluminum housing and door frame

Mounting:

Heavy-duty Trunnion mount with stainless steel hardware

Reflector:

Specular, vacuum-metalized polycarbonate

Gaskets:

High-temperature silicone gaskets

Finish:

Formulated for high-durability and long lasting color.

Green Technology:

Mercury and UV free. RoHS compliant components. Polyester powder coat finish formulated without the use of VOC or toxic heavy metals.

Electrical

Drivers:

Two Drivers, Constant Current, Class 2, 2000mA, 100-277V, 50-60Hz, Power Factor 99%

THD:

4.9% at 120V, 13.9% at 277V

Power Factor:

99.5% at 120V, 93.7% at 277V

Optical

NEMA Type:

NEMA Beam Spread of 6H x 6V

Sensor Characteristics

Field & Beam Angles:

Horizontal Beam Angle (50%): 91.8°, Vertical Beam Angle (50%): 73.5° Horizontal Field Angle (10%): 121.0°, Vertical Field Angle (10%): 108.0°

Other

Warranty:

RAB warrants that our LED products will be free from defects in materials and workmanship for a period of five (5) years from the date of delivery to the end user, including coverage of light output, color stability, driver performance and fixture finish.

Copyright © 2018 RAB Lighting Inc. All Rights Reserved Note: Specifications are subject to change at any time without notice

Technical Specifications (continued)

Other

Patents:

The design of FXLED150 is protected by patents pending in US, Canada, China, Taiwan and Mexico.

American Bureau of Shipping (ABS) :

For use on Mobile Offshore Drilling Units (MODU) and shipping vessels.

Replacement:

Replaces 400W Metal Halide

Buy American Act Compliance:

RAB values USA manufacturing! Upon request, RAB may be able to manufacture this product to be compliant with the Buy American Act (BAA). Please contact customer service to request a quote for the product to be made BAA compliant.

Dimensions

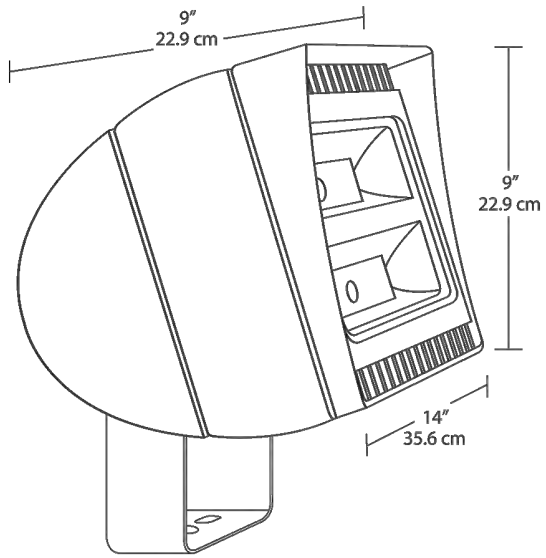

Features

- 66% energy cost savings vs. HID
- NEMA Type - 6H x 6V
- Air-Flow technology heat dissipation
- 100,000-hour LED lifespan
- 5-year warranty

Ordering Matrix

Family	Wattage	Mounting	Color Temp	Finish	Driver	Photocell Options
FXLED	150	T				
	78 = 78W **105** = 105W **125** = 125W **150** = 150W	**SF** = Slipfitter **T** = Trunnion	**Blank** = 5000K (Cool) **N** = 4000K (Neutral) **Y** = 3000K (Warm)	**Blank** = Bronze **W** = White	**/480** = 480V **/BL** = Bi-Level (Slipfitter models only) **/D10** = 0-10V Dimming (78W, 125W and 150W only)	**Blank** = No Option **/PCT** = 100-277V Twistlock **/PCT4** = 480V Twistlock

Copyright © 2018 RAB Lighting Inc. All Rights Reserved Note: Specifications are subject to change at any time without notice

FXLED300SF/PCT



Ultra high output, high efficiency LED floodlight with NEMA Types: 7H x 6V, 6H x 4V, 4H x 6V, 5H x 5V and 3H x 3V. Patent Pending airflow technology ensures long LED and driver lifespan. Use for general and security lighting for large areas, building facades, signs and landscapes.

Color: Bronze

Weight: 66.1 lbs

Project:	Type:
Prepared By:	Date:

Driver Info

Type:	Constant Current
120V:	2.69A
208V:	1.57A
240V:	1.36A
277V:	1.18A
Input Watts:	315W
Efficiency:	95%

LED Info

Watts:	300W
Color Temp:	5000K
Color Accuracy:	72 CRI
L70 Lifespan:	100000
Lumens:	38292
Efficacy:	122 LPW

Technical Specifications

Listings

UL Listing:

Suitable for wet locations. Suitable for ground mounting.

IESNA LM-79 & LM-80 Testing:

RAB LED luminaries have been tested by an independent laboratory in accordance with IESNA LM-79 and LM-80, and have been received the Department of Energy "Lighting Facts" label.

DLC Listed:

This product is on the Design Lights Consortium (DLC) Qualified Products List and is eligible for rebates from DLC Member Utilities.
DLC Product Code: PF5PMFXJ

Electrical

Drivers:

Constant Current, 1050mA, 50/60 Hz, 120-277V, 4 kV surge protection, 120V: 2.69A, 208V: 1.57A, 240V: 1.36A, 277V: 1.18A, THD <20%, Power Factor: 99%

THD:

6.8% at 120V, 10.9% at 277V

Photocell:

120-277V twistlock photocell included. Photocell is compatible with 120-277V.

Optical

NEMA Type:

NEMA Beam Spread of 7H x 6V

LED Characteristics

Lifespan:

100,000-hour LED lifespan based on IES LM-80 results and TM-21 calculations.

LEDs:

Multip-chip, high-output, long-life LEDs

Color Consistency:

7-step MacAdam Ellipse binning to achieve consistent fixture-to-fixture color.

Color Stability:

LED color temperature is warrantied to shift no more than 200K in CCT over a 5 year period.

Color Uniformity:

RAB's range of CCT (Correlated Color Temperature) follows the guidelines of the American National Standard for Specifications for the Chromaticity of Solid State Lighting (SSL) Products, ANSI C78.377-2017.

Construction

IP Rating:

Ingress Protection rating of IP66 for dust and water

Maximum Ambient Temperature:

Suitable for use in 40°C (104°F) ambient temperatures

Effective Projected Area:

EPA = 4

Cold Weather Starting:

Minimum starting temperature is -40°C (-40°F)

Thermal Management:

Superior thermal management with external "Air-Flow" fins.

Lens:

Tempered glass lens.

Housing:

Die-cast aluminum housing and door frame

Mounting:

Heavy-duty Slipfitter for 2 3/8"OD pipe.

Reflector:

Specular and semi-specular vacuum metalized polycarbonate

Gaskets:

High-temperature silicone gaskets

Finish:

Formulated for high-durability and long lasting color.

Green Technology:

Mercury and UV free. RoHS compliant components. Polyester powder coat finish formulated without the use of VOC or toxic heavy metals.

Other

Warranty:

RAB warrants that our LED products will be free from defects in materials and workmanship for a period of five (5) years from the date of delivery to the end user, including coverage of light output, color stability, driver performance and fixture finish.

American Bureau of Shipping (ABS) :

For use on Mobile Offshore Drilling Units (MODU) and shipping vessels.

Copyright © 2018 RAB Lighting Inc. All Rights Reserved Note: Specifications are subject to change at any time without notice

Technical Specifications (continued)

Other

Replacement:

Replaces 1000W Metal Halide

Buy American Act Compliance:

RAB values USA manufacturing! Upon request, RAB may be able to manufacture this product to be compliant with the Buy American Act (BAA). Please contact customer service to request a quote for the product to be made BAA compliant.

Dimensions

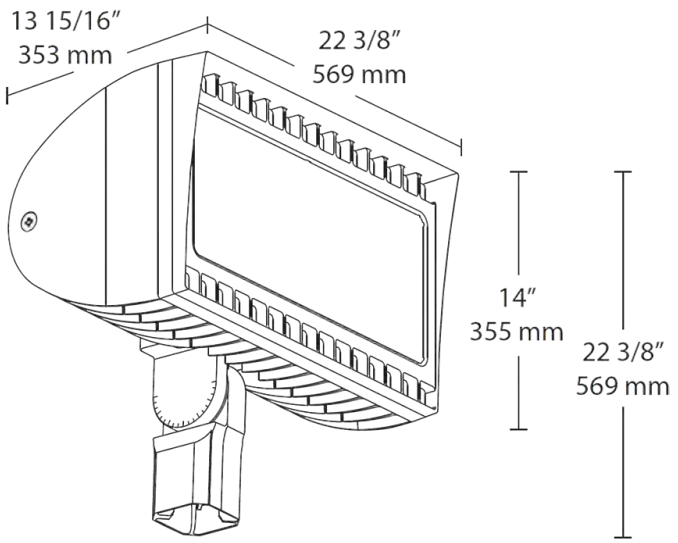

Features

- 300W replaces 1000 MH floodlights
- 100,000-hour LED lifespan
- 5-year No Compromise Warranty

Ordering Matrix

Family	Wattage	Mounting	Color Temp	NEMA Type	Finish	Driver Options	Options
FXLED	300	SF					/PCT
	200 = 200W **300** = 300W	**SF** = Slipfitter **T** = Trunnion	**Blank** = 5000K (Cool) **N** = 4000K (Neutral) **Y** = 3000K (Warm)	**Blank** = 7H x 6V **B64** = 6H x 4V **B55** = 5H x 5V **B33** = 3H x 3V **B46** = 4H x 6V	**Blank** = Bronze **W** = White	**Blank** = 120V **/480** = 480V **/BL** = Bi-Level (Slipfitters only) **/D10** = 0-10V Dimming	**Blank** = No option **/PCS** = 120V Swivel **/PCS2** = 277V Swivel **/PCT** = 120-277V Twistlock **/PCT4** = 480V Twistlock **/PCS4** = 480V Swivel **/LC** = Lightcloud® Controller

Copyright © 2018 RAB Lighting Inc. All Rights Reserved Note: Specifications are subject to change at any time without notice

FXLED300T/PCT



Ultra high output, high efficiency LED floodlight with NEMA Types: 7H x 6V, 6H x 4V, 4H x 6V, 5H x 5V and 3H x 3V. Patent Pending airflow technology ensures long LED and driver lifespan. Use for general and security lighting for large areas, building facades, signs and landscapes.

Color: Bronze

Weight: 66.1 lbs

Project:	Type:
Prepared By:	Date:

Driver Info		LED Info	
Type:	Constant Current	Watts:	300W
120V:	2.69A	Color Temp:	5000K
208V:	1.57A	Color Accuracy:	72 CRI
240V:	1.36A	L70 Lifespan:	100000
277V:	1.18A	Lumens:	38292
Input Watts:	315W	Efficacy:	122 LPW
Efficiency:	95%		

Technical Specifications

Listings

UL Listing:

Suitable for wet locations. Suitable for ground mounting.

IESNA LM-79 & LM-80 Testing:

RAB LED luminaries have been tested by an independent laboratory in accordance with IESNA LM-79 and LM-80, and have been received the Department of Energy "Lighting Facts" label.

DLC Listed:

This product is on the Design Lights Consortium (DLC) Qualified Products List and is eligible for rebates from DLC Member Utilities.
DLC Product Code: PF5PMFXJ

Electrical

Drivers:

Constant Current, 1050mA, 50/60 Hz, 120-277V, 4 kV surge protection, 120V: 2.69A, 208V: 1.57A, 240V: 1.36A, 277V: 1.18A, THD <20%, Power Factor: 99%

THD:

6.8% at 120V, 10.9% at 277V

Photocell:

120-277V twistlock photocell included. Photocell is compatible with 120-277V.

Optical

NEMA Type:

NEMA Beam Spread of 7H x 6V

LED Characteristics

Lifespan:

100,000-hour LED lifespan based on IES LM-80 results and TM-21 calculations.

LEDs:

Multip-chip, high-output, long-life LEDs

Color Consistency:

7-step MacAdam Ellipse binning to achieve consistent fixture-to-fixture color.

Color Stability:

LED color temperature is warrantied to shift no more than 200K in CCT over a 5 year period.

Color Uniformity:

RAB's range of CCT (Correlated Color Temperature) follows the guidelines of the American National Standard for Specifications for the Chromaticity of Solid State Lighting (SSL) Products, ANSI C78.377-2017.

Construction

IP Rating:

Ingress Protection rating of IP66 for dust and water

Maximum Ambient Temperature:

Suitable for use in 40°C (104°F) ambient temperatures

Effective Projected Area:

EPA = 4

Cold Weather Starting:

Minimum starting temperature is -40°C (-40°F)

Thermal Management:

Superior thermal management with external "Air-Flow" fins.

Lens:

Tempered glass lens.

Housing:

Die-cast aluminum housing and door frame

Mounting:

Heavy-duty Trunnion mount with stainless steel hardware

Reflector:

Specular and semi-specular vacuum metalized polycarbonate

Gaskets:

High-temperature silicone gaskets

Finish:

Formulated for high-durability and long lasting color.

Green Technology:

Mercury and UV free. RoHS compliant components. Polyester powder coat finish formulated without the use of VOC or toxic heavy metals.

Other

Warranty:

RAB warrants that our LED products will be free from defects in materials and workmanship for a period of five (5) years from the date of delivery to the end user, including coverage of light output, color stability, driver performance and fixture finish.

American Bureau of Shipping (ABS) :

For use on Mobile Offshore Drilling Units (MODU) and shipping vessels.

Copyright © 2018 RAB Lighting Inc. All Rights Reserved Note: Specifications are subject to change at any time without notice

Technical Specifications (continued)

Other

Replacement:

Replaces 1000W Metal Halide

Buy American Act Compliance:

RAB values USA manufacturing! Upon request, RAB may be able to manufacture this product to be compliant with the Buy American Act (BAA). Please contact customer service to request a quote for the product to be made BAA compliant.

Dimensions

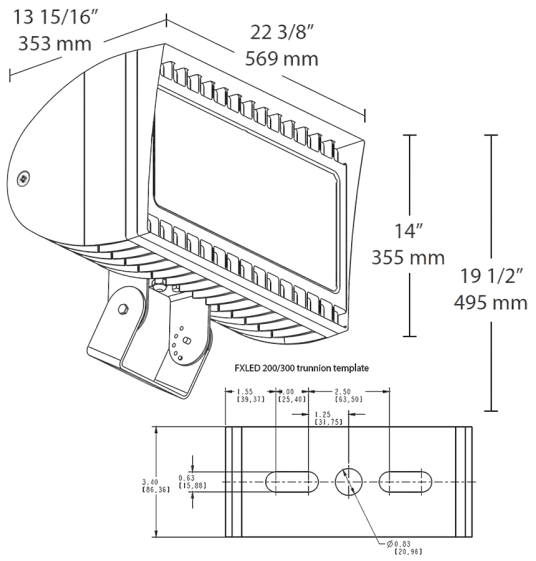

Features

- 300W replaces 1000 MH floodlights
- 100,000-hour LED lifespan
- 5-year No Compromise Warranty

Ordering Matrix

Family	Wattage	Mounting	Color Temp	NEMA Type	Finish	Driver Options	Options
FXLED	300	T					/PCT
	200 = 200W **300** = 300W	**SF** = Slipfitter **T** = Trunnion	**Blank** = 5000K (Cool) **N** = 4000K (Neutral) **Y** = 3000K (Warm)	**Blank** = 7H x 6V **B64** = 6H x 4V **B55** = 5H x 5V **B33** = 3H x 3V **B46** = 4H x 6V	**Blank** = Bronze **W** = White	**Blank** = 120V **/480** = 480V **/BL** = Bi-Level (Slipfitters only) **/D10** = 0-10V Dimming	**Blank** = No option **/PCS** = 120V Swivel **/PCS2** = 277V Swivel **/PCT** = 120-277V Twistlock **/PCT4** = 480V Twistlock **/PCS4** = 480V Swivel **/LC** = Lightcloud® Controller

Copyright © 2018 RAB Lighting Inc. All Rights Reserved Note: Specifications are subject to change at any time without notice

LED G40 Lamp

G40 SERIES



14W G40

PRODUCT DESCRIPTION:

MaxLite's LED G40 Globe is ideal for providing clear general lighting for globe, vanity and decorative fixtures throughout homes and hospitality applications. It consumes only 14 watts and replaces a 150-watt incandescent bulb, resulting in up to 91% savings in energy.

FEATURES:

- 14W
- 1300 Lumens
- Efficacy: 93
- 120V
- 60Hz
- 25,000 hour life (at L70 standards)
- CRI: 82
- Base: E26
- Dimmable down to ten percent
- Wattage Equivalent: 150W incandescent
- Operating temperature: -4°F to 113°F
- Suitable for use in damp locations
- Not for use in enclosed luminaires
- Five year warranty

APPLICATIONS:

- Vanity Fixture
- Pendant fixture
- Bath bar fixture
- Wall fixture

MODEL SELECTION (Full list of order codes on pg. 2) | Typical order example: 14G40DLED30

14G40	DLED	30
WATTAGE & FAMILY	**DIMMABILITY**	**COLOR TEMPERATURE (CCT)**
14G40= 14 watts, LED G40 Globe	**DLED=** Dimmable	**30=** 3000K

COMPATIBLE DIMMERS:

MAKE	DIMMER MODEL
Lutron	CTCL-153P
Lutron	DVCL-153P
Lutron	LGCL-153P
Lutron	S-600

MAKE	DIMMER MODEL
Leviton	IPL06
Leviton	IPI10
Leviton	6631-LW
Leviton	6683-IW

SPECIFICATIONS:

ITEM	SPECIFICATION	14G40DLED30 14 WATTS
GENERAL PERFORMANCE	Wattage	14W
	Color Temperature	3000K
	Lumens Delivered (lm)	1300
	Efficacy (lm/W)	93
	Equivalency	150W Inc.
	Lumen Maintenance (L70)	25,000 hours
ELECTRICAL	Power Factor	≥.90
	Input Voltage	120V
PHYSICAL	Operating Temperature	-4°F to 113°F
APPLICATION	Environment	Dry, Damp
	Certification	Energy Star, ETL, RoHS
	Warranty	5 Year

ORDERING:

ORDER CODE	MODEL	WATTAGE	INCANDESCENT EQUIVALENCY	CRI	OUTPUT (LUMENS)	DIMENSIONS H" X W"	CCT
96879	14G40DLED30	14W	150W	82	1300	6.45" x 4.75"	3000K

Lumination™ LED Luminaires

LRX Round Series
LED Downlights



Project name _____
Date _____
Type _____

Product Description:

The Lumination LRX Series LED downlights are the ideal retrofit or new construction solution for traditional downlight fixtures. They install in just minutes into most 4-inch, 6-inch, and 8-inch rough-in frames and bring afresh look to the space. Unlike plug-in LED lamps, the LRX downlight gives you a new power supply and 50,000 hour life rating, so that you won't have to worry about compatibility or maintenance issues with the original ballasts. All downlights in the LRX family utilize a non-conductive poly carbonate trim perfect for wet rated applications.

Performance Summary:

NOMINAL LUMENS	650	1000	1800	3000
Delivered Lumens-LRXR4	700	1020	N/A	N/A
Delivered Lumens-LRXR6	700	1050	1900	N/A
Delivered Lumens-LRXR8	750	1200	2000	3300
System Input Power (W)	8.5	13	22	35
System Efficacy (LPW)	88	92	91	94

*LPW based on LRXR8

Input Voltage: 120 - 277V
Standard Dimming Controls: 0-10V down to 10%
CCT: 3000K, 3500K, 4000K
CRI: 82
Lifetime Rating: L85 @ 50,000 Hours
Input Frequency (Hz): 50/60Hz
Power Factor: >0.9
Mounting Options: Spring clips clamp on to existing frame or directly to ceiling
Weight: 0.6 lb
IC Rating: Non-IC Rated
Limited Warranty: 5 years system
Files Available: LM79, LM80, IES

Listings: c UL us LISTED

- UL and cUL Listed.
- Suitable for wet locations

ENERGY STAR

Product Dimensions:

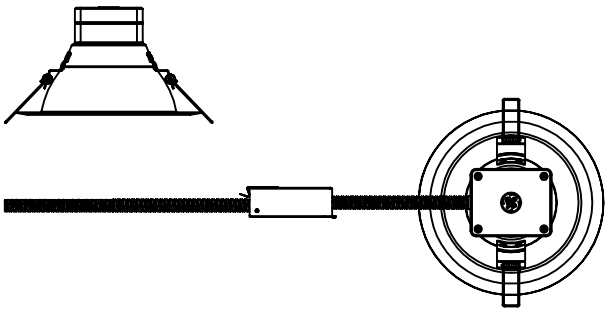

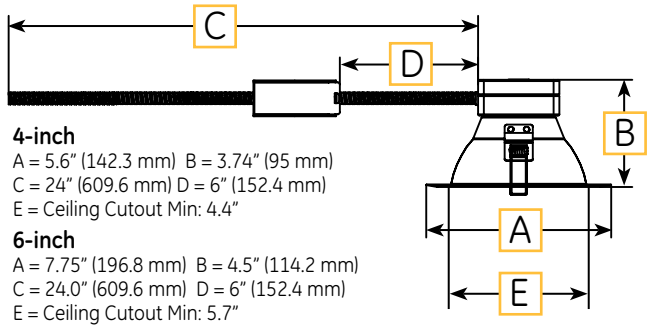

4-inch
A = 5.6" (142.3 mm) B = 3.74" (95 mm)
C = 24" (609.6 mm) D = 6" (152.4 mm)
E = Ceiling Cutout Min: 4.4"

6-inch
A = 7.75" (196.8 mm) B = 4.5" (114.2 mm)
C = 24.0" (609.6 mm) D = 6" (152.4 mm)
E = Ceiling Cutout Min: 5.7"

8-inch
A = 9.75" (247.6 mm) B = 5.1" (129.4 mm)
C = 24.0" (609.6 mm) D = 6" (152.4 mm)
E = Ceiling Cutout Min: 7.7"

DaintreeNetworks
Simplifying Building Energy Management

a product of ecomagination℠

Ordering Information:

LRX **R** __ **8** __ **MD** __

PRODUCT FAMILY	SHAPE/SIZE	LUMENS	CRI	CCT	DIMMING	OPTIONS
LRX = Lumination RX Series Downlight	**R4** = 4" Round Retrofit Downlight	**10**[1] = 1000lm/650lm	**8** = 82 CRI	**30** = 3000K **35** = 3500K **40** = 4000K	**MD** = 0-10V Dimming	**BLANK** = None **EL**[2] = EMBB Ready [2] Must order "EL" option + LRXEMBBKIT (sold separately) for complete EMBB solution.
	R6 = 6" Round Retrofit Downlight	**10**[1] = 1000lm/650lm **18** = 1800lm				
	R8 = 8" Round Retrofit Downlight	**10**[1] = 1000lm/650lm **18** = 1800lm **30** = 3000lm [1]1000lm models feature a selectable lumen package to allow field adjustments to light output. See page 2 for further info.				

The standard trim is white. Colored trim options are available, please see page 2 for details.

current powered by GE

Accessories:

PRODUCT DESCRIPTION	MATERIAL DESCRIPTION	MATERIAL	NOTES
347V KIT	LRX347V277	93036250	347V TRANSFORMER QUICK CONNECT KIT
6" WHITE PAINTED GOOF RING	GRRC6RPTWT	93018829	RECOMMENDED FOR OVER-SIZED HOLES IN CEILING
8" WHITE PAINTED GOOF RING	GRRC8RPTWT	93018831	RECOMMENDED FOR OVER-SIZED HOLES IN CEILING
6" NEW CONSTRUCTION FRAME KIT	FRAME6R	93025091	RECOMMENDED FOR NEW CONSTRUCTION APPLICATIONS
8" NEW CONSTRUCTION FRAME KIT	FRAME8R	93025092	RECOMMENDED FOR NEW CONSTRUCTION APPLICATIONS
ENLIGHTED SENSOR KIT	LCACBAVQNUNGALV	93029451	SEE LCA KIT LITERATURE & INSTALL GUIDE
DAINTREE SENSOR KIT	LCACBAVTQUNGALV	93057194	SEE LCA KIT LITERATURE & INSTALL GUIDE
EMERGENCY BATTERY BACKUP KIT (7W)	LRXEMBBKIT07	93043031	7 WATT EMBB QUICK CONNECT KIT (MUST HAVE FIXTURE WITH "EL" OPTION)
EMERGENCY BATTERY BACKUP KIT (10W)	LRXEMBBKIT10	93043540	10 WATT EMBB QUICK CONNECT KIT (MUST HAVE FIXTURE WITH "EL" OPTION)

Colored Trim Options:

	PRODUCT DESCRIPTION	MATERIAL DESCRIPTION	MATERIAL	LUMEN OUTPUT
	LRXR6 ROUND 6" TRIM INSERT, BLACK	LRXR6TRIMBL	93059501	70%
	LRXR6 ROUND 6" TRIM INSERT, SILVER	LRXR6TRIMSV	93059502	90%
	LRXR8 ROUND 8" TRIM INSERT, BLACK (NOT AVAILABLE IN 3000LM)	LRXR8TRIMBL	93059503	70%
	LRXR8 ROUND 8" TRIM INSERT, SILVER (NOT AVAILABLE IN 3000LM)	LRXR8TRIMSV	93059504	85%

Photometric Data: Lumination™ LRX Series Downlights

LRXR410830MD

LUMINANCE DATA (CD/SQ.M)			
Angle	0°	45°	90°
45°	44163	43507	44576
55°	31383	30998	31794
65°	19283	19142	19599
75°	12977	12649	12986
85°	6327	6456	8002

ZONAL LUMEN SUMMARY	
Zone	Lumens
0-10	50.98
10-20	143.53
20-30	208.85
30-40	226.68
40-50	194.68
50-60	131.45
60-70	66.78
70-80	29.04
80-90	6.9
90-100	0.04
100-110	0.04
110-120	0.03
120-130	0.02
130-140	0.02
140-150	0.02
150-160	0.02
160-170	0.01
170-180	0.00

COEFFICIENTS OF UTILIZATION																		
RC	80%				70%				50%			30%			10%			0%
RW	70%	50%	30%	10%	70%	50%	30%	10%	50%	30%	10%	50%	30%	10%	50%	30%	10%	0%
0	119	119	119	119	116	116	116	116	111	111	111	106	106	106	102	102	102	100
1	111	107	103	100	108	105	102	99	101	98	96	97	95	93	93	92	90	88
2	103	96	90	85	100	94	89	84	90	86	82	87	84	80	84	81	79	77
3	95	86	79	73	92	84	78	73	81	76	71	79	74	70	76	72	69	67
4	88	77	70	64	86	76	69	63	74	67	63	71	66	62	69	65	61	59
5	81	70	62	56	79	69	62	56	67	60	55	65	59	55	63	58	54	52
6	76	64	56	50	74	63	55	50	61	54	49	60	54	49	58	53	49	47
7	71	58	50	45	69	58	50	45	56	49	44	55	49	44	53	48	44	42
8	66	54	46	41	65	53	46	40	52	45	40	51	44	40	49	44	40	38
9	62	50	42	37	61	49	42	37	48	41	37	47	41	37	46	40	36	35
10	58	46	39	34	57	46	38	34	45	38	34	44	38	33	43	37	33	32

ZONAL LUMEN SUMMARY			
Zone	Lumens	% of Lamp	% of Fixture
0-20	194.51	N.A.	18.4
0-30	403.36	N.A.	38.1
0-40	630.04	N.A.	59.5
0-60	956.17	N.A.	90.3
0-80	1052	N.A.	99.3
0-90	1058.9	N.A.	100

POLAR GRAPH

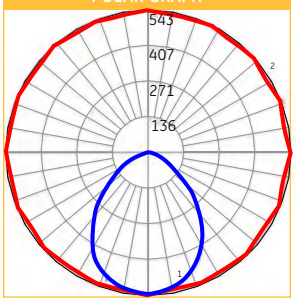

Photometric Data: Lumination™ LRX Series Downlights

LRXR610830MD

ZONAL LUMEN SUMMARY	
Zone	Lumens
0-10°	48.26
10-20°	135.99
20-30°	199.14
30-40°	221.96
40-50°	188.12
50-60°	118.95
60-70°	54.04
70-80°	25.47
80-90°	7.78
90-100°	0.06
100-110°	0.02
110-120°	0.03
120-130°	0.03
130-140°	0.04
140-150°	0.05
150-160°	0.05
160-170°	0.03
170-180°	0.01

COEFFICIENTS OF UTILIZATION																			
RC	80%				70%				50%			30%			10%			0%	
RW	70%	50%	30%	10%	70%	50%	30%	10%	50%	30%	10%	50%	30%	10%	50%	30%	10%	0%	
0	119	119	119	119	116	116	116	116	111	111	111	106	106	106	102	102	102	100	
1	111	107	104	100	108	105	102	99	101	98	96	97	95	93	93	92	90	88	
2	103	96	90	85	100	94	89	85	91	86	83	87	84	81	85	82	79	77	
3	95	86	79	74	93	85	78	73	82	76	72	79	75	71	77	73	69	68	
4	88	78	70	64	86	76	69	64	74	68	63	72	67	62	70	65	62	60	
5	82	70	63	57	80	69	62	57	67	61	56	66	60	55	64	59	55	53	
6	76	64	56	51	74	63	56	50	62	55	50	60	54	50	59	53	49	47	
7	71	59	51	45	69	58	51	45	57	50	45	55	49	45	54	48	44	43	
8	66	54	46	41	65	53	46	41	52	45	41	51	45	40	50	44	40	39	
9	62	50	42	37	61	49	42	37	48	42	37	47	41	37	46	41	37	35	
10	59	46	39	34	57	46	39	34	45	38	34	44	38	34	43	38	34	32	

NOTE: Floor Cavity Reflectance : 20%

ZONAL LUMEN SUMMARY		
Zone	Lumens	% of Fixture
0-20°	184.25	18.40
0-30°	383.39	38.30
0-40°	605.34	60.50
0-60°	912.41	91.20
0-80°	991.92	99.20
0-90°	999.70	100.00

LUMINANCE DATA (CANDELA/m²)			
Gamma	0°	45°	90°
45°	17519	17519	17519
55°	11682	11682	11682
65°	6286	6286	6286
75°	4723	4723	4723
85°	4000	4000	4000

POLAR GRAPH

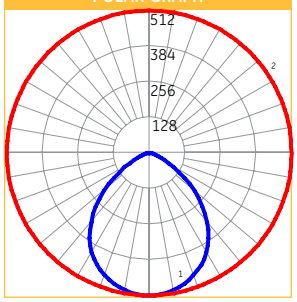

LRXR818830MD

ZONAL LUMEN SUMMARY	
Zone	Lumens
0-10°	87.00
10-20°	245.00
20-30°	357.94
30-40°	405.72
40-50°	355.72
50-60°	213.19
60-70°	84.35
70-80°	37.58
80-90°	10.61
90-100°	0.07
100-110°	0.14
110-120°	0.29
120-130°	0.44
130-140°	0.54
140-150°	0.55
150-160°	0.48
160-170°	0.31
170-180°	0.10

COEFFICIENTS OF UTILIZATION																			
RC	80%				70%				50%			30%			10%			0%	
RW	70%	50%	30%	10%	70%	50%	30%	10%	50%	30%	10%	50%	30%	10%	50%	30%	10%	0%	
0	119	119	119	119	116	116	116	116	111	111	111	106	106	106	102	102	102	100	
1	111	107	104	101	108	105	102	99	101	98	96	97	95	93	94	92	90	88	
2	103	96	91	86	101	94	89	85	91	87	83	88	84	81	85	82	79	78	
3	95	87	80	74	93	85	79	74	82	77	72	80	75	71	77	73	70	68	
4	88	78	71	65	86	77	70	65	75	68	64	72	67	63	70	66	62	60	
5	82	71	63	57	80	70	63	57	68	61	56	66	60	56	64	59	55	53	
6	76	65	57	51	75	64	56	51	62	55	50	60	54	50	59	54	50	48	
7	71	59	51	46	70	58	51	46	57	50	45	56	50	45	54	49	45	43	
8	67	54	47	41	65	54	46	41	52	46	41	51	45	41	50	45	41	39	
9	62	50	43	38	61	50	42	38	49	42	37	47	41	37	47	41	37	35	
10	59	47	39	34	57	46	39	34	45	39	34	44	38	34	43	38	34	32	

NOTE: Floor Cavity Reflectance : 20%

ZONAL LUMEN SUMMARY		
Zone	Lumens	% of Fixture
0-20°	332.00	18.40
0-30°	689.94	38.30
0-40°	1095.66	60.90
0-60°	1664.57	92.50
0-80°	1786.51	99.20
0-90°	1797.12	99.80

LUMINANCE DATA (CANDELA/m²)			
Gamma	0°	45°	90°
45°	8251	8251	8251
55°	4433	4433	4433
65°	1645	1645	1645
75°	827	827	827
85°	263	263	263

POLAR GRAPH

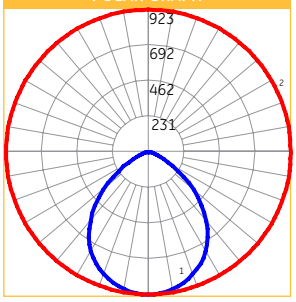

Selectable Driver Package:

The LRX Series comes with a new Selectable Driver Package which allows customers to manually switch from full power (1000lm) to lower power (650lm) with just the switch of a button. This affords unprecedented flexibility for distributors to stock fewer SKUs. Reduces install risk by effectively having 2 lumen levels in 1 simple package.



*This feature is only available in the 1000/650lm package.

Product Specifications:

Construction:

- 16 gauge Aluminum spinning reflector housing, powder coating
- Custom engineered heat sink flange for passive cooling on all lumen options

Installation:

- Fixture mounting to an existing metal frame
- Conduit connect to quick-disconnect for easy installation

Optical System:

- Custom engineered reflectors for wide distributions.
- Semi-diffuse diffuser for ideal combination of optical efficiency and uniformity

Electrical System:

- High Efficiency, integrated driver with 0-10V dimming
- Selectable Lumen Driver available in the 1000/650lm package.

For more information and access to all of our resources, including our design tool visit: www.gelighting.com

current powered by GE

All trademarks are the property of their respective owners. Information provided is subject to change without notice. All values are design or typical values when measured under laboratory conditions. Current, powered by GE is a business of the General Electric Company.
© 2017 GE.

ENVIRONMENTALLY FRIENDLY, ENERGY EFFICIENT

- One fixture converts nearly any manufacturers incandescent, CFL or H.I.D. fixtures with a rough-in inner diameter of 7-5/8" to 8-1/8" diameter to high efficiency LED
- All installation can be performed from below the ceiling with out removing existing fixture
- Energy savings up to 50-60% vs. CFL and HID
- Superior-quality white LED light output using Chip on Board technology
- No harmful ultraviolet or infrared wavelengths • No lead or mercury

PRODUCT SPECIFICATIONS

Enabled with Atrius™: These products are enabled with Atrius, making them part of the Atrius Sensory Network and ready to deliver valuable data and connectivity to the Atrius Platform. For more information concerning Atrius solutions, please refer to www.acuitybrands.com/Atrius.

OPTICS

Hyperbolic: Unique hyperbolic shape optimized for small, directional LED source, maximizes fixture efficiency while creating the "Silent Ceiling" appearance by reducing lamp image and aperture brightness • Geometry of hyperbolic curve provides unique aperture appearance and smoother light distribution
Parabolic/Lens: Computer-optimized parabolic reflector with frosted convexed lens regressed into cone provides uniform distribution with no striations
Wall Wash: Available in Hyperbolic and Parabolic. Both providing uniform distributions with no striations
Baffle: White or black painted deep multi-groove aluminum baffle insert with integral white painted flange and frosted convexed glass lens

ELECTRICAL

LED Light Engine: Compact light source delivers uniform illumination without pixilation, enabling excellent beam control • 2SDCM (5000K within 3SDCM) • 80, 90 & 97 CRI • Replaceable light engine with push in wire connections mounts directly to heat sink and is easily replaceable
Passive Cooling: Aluminum heat sink integrated directly with housing provides superior thermal management to ensure the long life of LED
LED Driver: Power factor >0.9 • Easily replaceable from above or below the ceiling
Dimming: Dimmable via 0-10V protocol standard • Optional drivers available for use with Lutron EcoSystem, 2-wire dimmers DMXR, or DALI • For a list of compatible dimmers, see LED-DIM.
Life: Rated for 60,000 hours at 70% lumen maintenance • Available with optional Lumen Depreciation Indicator (LDI)

A+ Capable options indicated by this color background

J7.1.19G4

indy™

800 TO 9000 LUMEN 8" LED RETRO-FIT

HYPERBOLIC / PARABOLIC / WALLWASH

LRT8 SERIES

Type	Cat. No.

Project: _____

Notes: _____

Operation Temperature: -20° C to 50° C
Emergency Battery Pack (Optional) output: Provides a minimum of 600 (BR), or 1000 (HBR) lumens for a minimum duration of 90 minutes • BRT20C option is CEC Title 20 compliant
Warranty: 5 years when used in accordance with manufacturing guidelines.
Specifications subject to change without notice.



ORDERING INFORMATION

Complete Catalog# Example Includes (Rough-In, option, reflector, accessory) Ordering Example: LRT8 08LM 27K MVOLT G4 80CRI ZT LDI HW CS PF

ROUGH-IN

Series	Lumen Package	Color Temperature	Voltage	Generation	CRI	Driver	Rough-In Options
LRT8 8" L-Series Retrofit Downlight	**08LM** 800 Lumens **13LM** 1300 Lumens **15LM** 1500 Lumens **17LM** 1700 Lumens **23LM** 2300 Lumens **28LM** 2800 Lumens **33LM** 3300 Lumens **40LM** 4000 Lumens **45LM** 4500 Lumens **50LM** 5000 Lumens **55LM** 5500 Lumens **60LM** 6000 Lumens **65LM** 6500 Lumens **70LM** 7000 Lumens **75LM** 7500 Lumens **80LM** 8000 Lumens **85LM** 8500 Lumens **90LM** 9000 Lumens	**27K** 2700K **30K** 3000K **35K** 3500K **40K** 4000K **50K** 5000K	**120** 120 Volt **277** 277 Volt **347** 347 Volt **MVOLT**[1] Multi-Volt (120-277)	**G4** Gen 4	**80CRI** 80+ CRI **90CRI**[14] 90+ CRI **97CRI**[2] 97+ CRI	**DALI** DALI Control Dimming **DMXR** DMX/RDM Driver **EDAB**[4,5] eldoLED SOLOdrive DALI. Logarithmic dimming to <1% **EDXB**[3,4,6] eldoLED POWERdrive DMX/RDM w/ Phoenix Connectors. Logarithmic dimming to <1% **EZ10**[4,5] eldoLED 0-10V ECOdrive. Linear dimming to 10% min. **EZ1**[4,5] eldoLED 0-10V ECOdrive. Linear dimming to 1% min. **EZB**[4,5] eldoLED 0-10V SOLOdrive. Logarithmic dimming to <1% **FD**[5,7] Forward or Reverse Phase Dimming Driver **FDL**[7,8,17] Forward Phase Dimming Lutron Driver **PD**[8,17] Lutron Ecosystem Dimming Driver **ZT**[16] 0-10V Dimming	**F**[3,9] Fuse and Fuse Holder **CP**[10] Chicago Plenum **LDI** Lumen Depreciation Indicator **BR**[3,13] Emergency Battery Pack w/Remote Test Switch **BRT20C**[3,13] Emergency Battery Pack w/ Remote Test Switch, CEC Title 20 Compliant **HBR**[3,13] High Lumen Emergency Battery Pack w/Remote Test Switch **NL**[9,11] nLight® Dimming Pack Controls **NLER**[9,11] nLight® dimming pack controls. nLER controls fixtures on emergency circuit **INC**[7] Medium base socket adapter for quick retro-fit of incandescent fixtures **AE1BN**[18] Atrius™ enabled, Bluetooth® beacons, network and in fixture power supply

REFLECTOR

To order reflector separately, use "LRT8" prefix before reflector option values. Ex: LRT8 HW CS PF

See notes on page 2.

Trim Style				Finish		Trim Options	
BAF[12]	Baffle	**P**	Parabolic	**BL**	Black (Baffle only)	**PF**[15]	White Flange
HM[13]	Hyperbolic Medium	**WC**[13]	Corner Wall Wash	**CD**	Clear Diffuse	**WET**	Wet Location
HN[13]	Hyperbolic Narrow	**WD**[13]	Double Wall Wash	**CS**	Clear Specular		
HW[13]	Hyperbolic Wide	**WS**[13]	Single Wall Wash	**CSS**	Clear Semi-Specular		
HWS[13]	Hyperbolic Single Wall Wash			**WH**	White		

 ©2017 Acuity Brands Lighting, Inc.

Ordering Notes

1 Only 800, 1300, 1500 and 1700 lumen fixtures are MVOLT.
2 2700K & 3000K only.
3 Not available with 347V.
4 Not compatible with LDI.
5 Not available for 6000 lumens and up.
6 Not available for 4000 and 5500 lumens and up.
7 120V only.
8 Not available for 5000 lumens and up.
9 Specify voltage.
10 BR, BRT20C, HBR, EDXB, NL, NLER not compatible with CP.
11 Only compatible with EZ10, EZ1 & EZB (nPS 80 EZ) drivers and 60LM-90LM ZT (nPP16 D) drivers.
12 Only available with BL or WH trim finish.
13 Not compatible with WET.
14 90CRI not compatible with 50K for 800-2300 lumens.
15 Not required when specifying WH finish.
16 Not compatible with NL between 800 and 5500 lumens.
17 Not compatible with BR, BRT20C, HBR, or LDI.
18 See AE1BN notes in following table for compatibility with other options.

AE1BN Notes

Only compatible with ZT, EZ1, EZB, EZ10 drivers.
CP, BR, BRT20C, HBR, NL, NLER not compatible with AE1BN.
Recommended ceiling height of 30' and under; not intended for use on ceilings greater than 40'.

The Bluetooth® word mark and logos are registered trademarks owned by Bluetooth SIG, Inc. and any use of such marks by Acuity Brands Lighting is under license.

PRODUCT SPECIFICATIONS (cont.)

MECHANICAL

Retro-fit Housing: Housing installs from below ceiling • Secured in place by three (3) tension clips • Tension clips accommodate ceilings from 1/2" to 1-1/8" thick • Integral heat sink conducts heat away from LED light engine • Driver is accessible from below the ceiling and can be upgraded to accommodate future technology improvements.

TRIMS:

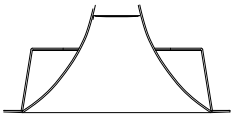
HYPERBOLIC

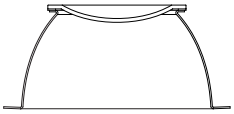
PARABOLIC

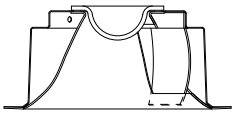
HYPERBOLIC WALLWASH

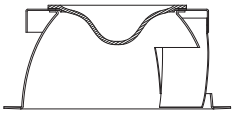
PARABOLIC WALLWASH

APERTURE: 7" Dia.
CEILING CUTOUT: 8-1/8" Dia.
OVERLAP: 9-1/2" Dia.

PASSIVE COOLING DIMENSIONS: 800 - 9000 Lumens

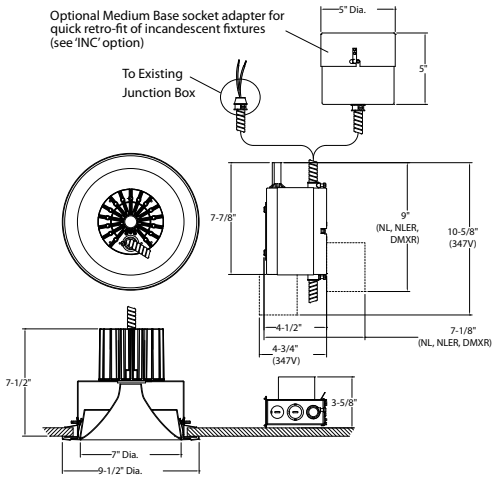

Atrius Enabled

PASSIVE COOLING DIMENSIONS: 800 - 9000 Lumens

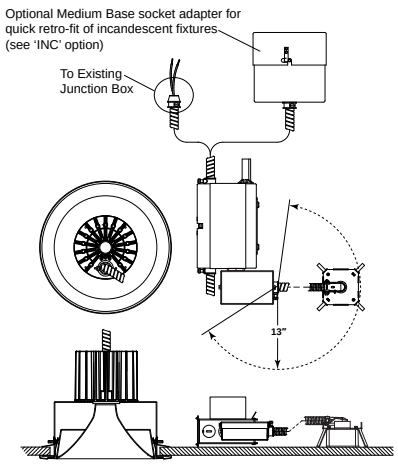

ENERGY STAR® certified

	PRODUCT#	FIXTURE CONFIGURATIONS = ENERGY STAR	
ENERGY STAR	MVOLT 120V/277V LRT8 (WW)LM (XX)K MVOLT G4 (YY)CRI (ZZ) (CC)[1]	Lumen Package: CCT: Voltage: CRI: Trim Type: Trim Color/Finish:	WW = 08[2], 13[2], 15, 17 XX = 27, 30, 35, 40, 50 MVOLT (120V-277V) YY = 80, 90, 97 ZZ = HN, HM, HW, P CC = CS, CSS, CD
ENERGY STAR	120V/277V LRT8 (WW)LM (XX)K (V) G4 (YY)CRI (ZZ) (CC)[1]	Lumen Package: CCT: Voltage: CRI: Trim Type: Trim Color/Finish:	WW = 17, 23, 28, 33, 40, 45, 50, 55, 60, 65, 70, 75, 80, 85, 90 XX = 27, 30, 35, 40, 50 V = 120, 277 YY = 80, 90, 97 ZZ = HN, HM, HW, P CC = CS, CSS, CD

1 EDAB, EDXB, PD and FDL options are not ENERGY STAR® certified.
2 Indicated lumen packages are not ENERGY STAR® certified with -DMXR or -DALI options when used with 277 volts.

LABELS AND LISTINGS

• UL & cUL listed for damp locations • UL spacing requirement for 4000 lumen and above: minimum of 4' between fixture centers, 3" overhead clearance, 2' from fixture center to side wall • RoHS compliant • EMI complies with FCC 47, Part 15, Class A • ENERGY STAR® certified, see table for designated products • I.B.E.W. Union made • ARRA Compliant

ENGINEERING DATA: 347 Volt available, consult factory																		
VOLTAGE	120																	
LIGHT ENGINE LUMENS	800	1300	1500	1700	2300	2800	3300	4000	4500	5000	5500	6000	6500	7000	7500	8000	8500	9000
CCT	2700K/3000K/3500K/4000K/5000K																	
INPUT CURRENT	0.076	0.123	0.142	0.167	0.247	0.238	0.280	0.351	0.345	0.381	0.427	0.439	0.483	0.541	0.573	0.607	0.656	0.710
INPUT WATTAGE	9.15	14.70	17.06	19.98	29.64	28.46	33.62	42.14	41.41	45.54	51.08	52.51	58.11	64.59	68.84	72.83	78.87	85.03
INPUT FREQUENCY	50/60Hz	50/60Hz	50/60Hz	50/60Hz	50/60Hz	50/60Hz	50/60Hz	50/60Hz	50/60Hz	50/60Hz	50/60Hz	50/60Hz	50/60Hz	50/60Hz	50/60Hz	50/60Hz	50/60Hz	50/60Hz
THD%	6.67	4.25	3.91	4.07	5.68	5.46	4.43	4.53	6.03	6.03	6.23	6.44	6.54	7.32	7.58	7.75	8.37	8.05
POWER FACTOR	0.994	0.996	0.995	0.995	0.995	0.995	0.997	0.998	0.996	0.996	0.996	0.996	0.996	0.995	0.995	0.996	0.996	0.996
VOLTAGE	277																	
LIGHT ENGINE LUMENS	800	1300	1500	1700	2300	2800	3300	4000	4500	5000	5500	6000	6500	7000	7500	8000	8500	9000
CCT	2700K/3000K/3500K/4000K/5000K																	
INPUT CURRENT	0.036	0.058	0.067	0.077	0.113	0.108	0.131	0.158	0.161	0.175	0.195	0.202	0.221	0.251	0.265	0.268	0.290	0.310
INPUT WATTAGE	9.34	14.69	17.14	20.03	29.49	28.19	33.83	41.68	41.74	45.80	51.02	52.35	57.64	64.22	68.40	71.29	77.27	83.16
INPUT FREQUENCY	50/60Hz	50/60Hz	50/60Hz	50/60Hz	50/60Hz	50/60Hz	50/60Hz	50/60Hz	50/60Hz	50/60Hz	50/60Hz	50/60Hz	50/60Hz	50/60Hz	50/60Hz	50/60Hz	50/60Hz	50/60Hz
THD%	11.84	10.97	11.48	10.49	8.94	9.04	10.48	8.79	9.15	8.07	9.85	11.12	10.97	13.07	12.83	12.96	13.53	12.56
POWER FACTOR	0.925	0.918	0.916	0.934	0.944	0.943	0.932	0.953	0.934	0.943	0.944	0.933	0.942	0.921	0.931	0.957	0.962	0.965

HYPERBOLIC

DELIVERED LUMENS/LUMENS PER WATT (35K 80CRI)

	800 35K		1300 35K		1500 35K		1700 35K		2300 35K		2800 35K		3300 35K		4000 35K		4500 35K	
TRIM/FINISH	Lumens	LPW	Lumens	LPW	Lumens	LPW	Lumens	LPW	Lumens	LPW	Lumens	LPW	Lumens	LPW	Lumens	LPW	Lumens	LPW
LRT8 HN CS	900	98.4	1453	98.9	1662	97.4	1873	93.8	2258	76.2	2827	99.3	3290	97.9	4000	94.9	4343	104.9
LRT8 HN CSS	801	87.6	1294	88.0	1480	86.7	1668	83.5	2010	67.8	2618	92.0	3047	90.6	3705	87.9	3658	88.3
LRT8 HN CD	724	79.1	1169	79.5	1337	78.4	1507	75.4	1816	61.3	2374	83.4	2763	82.2	3359	79.7	3428	82.8
LRT8 HM CS	880	96.2	1421	96.7	1625	95.3	1832	91.7	2208	74.5	2754	96.8	3205	95.3	3897	92.5	3937	95.1
LRT8 HM CSS	860	94.0	1388	94.4	1588	93.1	1790	89.6	2157	72.8	2671	93.9	3109	92.5	3780	89.7	3751	90.6
LRT8 HM CD	763	83.3	1231	83.8	1408	82.5	1587	79.4	1913	64.5	2439	85.7	2839	84.4	3452	81.9	3310	79.9
LRT8 HW CS	940	102.8	1518	103.3	1736	101.8	1957	98.0	2359	79.6	2971	104.4	3457	102.8	4203	99.7	4129	99.7
LRT8 HW CSS	907	99.1	1464	99.6	1674	98.1	1887	94.5	2275	76.7	2863	100.6	3332	99.1	4051	96.1	3807	91.9
LRT8 HW CD	868	94.9	1402	95.4	1604	94.0	1808	90.5	2179	73.5	2743	96.4	3192	94.9	3881	92.1	3513	84.8
	5000 35K		5500 35K		6000 35K		6500 35K		7000 35K		7500 35K		8000 35K		8500 35K		9000 35K	
TRIM/FINISH	Lumens	LPW	Lumens	LPW	Lumens	LPW	Lumens	LPW	Lumens	LPW	Lumens	LPW	Lumens	LPW	Lumens	LPW	Lumens	LPW
LRT8 HN CS	4753	104.4	5263	103.0	5466	104.1	5984	103.0	6550	101.4	6858	99.6	7275	99.9	8032	101.8	8456	99.4
LRT8 HN CSS	4004	87.9	4433	86.8	4604	87.7	5040	86.7	5517	85.4	5776	83.9	6128	84.1	6765	85.8	7122	83.8
LRT8 HN CD	3751	82.4	4154	81.3	4314	82.1	4723	81.3	5170	80.0	5412	78.6	5742	78.8	6339	80.4	6673	78.5
LRT8 HM CS	4309	94.6	4772	93.4	4955	94.4	5425	93.4	5938	91.9	6217	90.3	6596	90.6	7282	92.3	7666	90.2
LRT8 HM CSS	4105	90.1	4546	89.0	4721	89.9	5168	88.9	5657	87.6	5923	86.0	6284	86.3	6937	88.0	7303	85.9
LRT8 HM CD	3623	79.5	4011	78.5	4166	79.3	4561	78.5	4992	77.3	5227	75.9	5545	76.1	6122	77.6	6445	75.8
LRT8 HW CS	4519	99.2	5004	98.0	5197	99.0	5690	97.9	6228	96.4	6521	94.7	6918	95.0	7637	96.8	8040	94.6
LRT8 HW CSS	4166	91.5	4613	90.3	4791	91.2	5245	90.3	5741	88.9	6011	87.3	6377	87.6	7040	89.3	7411	87.2
LRT8 HW CD	3845	84.4	4258	83.4	4422	84.2	4841	83.3	5299	82.0	5548	80.6	5886	80.8	6498	82.4	6841	80.5

PARABOLIC

DELIVERED LUMENS/LUMENS PER WATT (35K 80CRI)

	800 35K		1300 35K		1500 35K		1700 35K		2300 35K		2800 35K		3300 35K		4000 35K		4500 35K	
TRIM/FINISH	Lumens	LPW	Lumens	LPW	Lumens	LPW	Lumens	LPW	Lumens	LPW	Lumens	LPW	Lumens	LPW	Lumens	LPW	Lumens	LPW
LRT8 P CS	743	81.2	1200	81.6	1373	80.5	1547	77.4	1865	62.9	2319	81.5	2699	80.3	3282	77.9	3491	84.3
LRT8 P CSS	744	81.4	1202	81.8	1375	80.6	1549	77.5	1868	63.0	2323	81.6	2703	80.4	3287	78.0	3507	84.7
LRT8 P CD	643	70.3	1038	70.6	1187	69.6	1338	67.0	1613	54.4	1995	70.1	2322	69.1	2823	67.0	3043	73.5
	5000 35K		5500 35K		6000 35K		6500 35K		7000 35K		7500 35K		8000 35K		8500 35K		9000 35K	
TRIM/FINISH	Lumens	LPW	Lumens	LPW	Lumens	LPW	Lumens	LPW	Lumens	LPW	Lumens	LPW	Lumens	LPW	Lumens	LPW	Lumens	LPW
LRT8 P CS	3821	83.9	4231	82.8	4394	83.7	4810	82.8	5265	81.5	5513	80.1	5848	80.3	6456	81.9	6797	79.9
LRT8 P CSS	3838	84.3	4250	83.2	4414	84.1	4832	83.2	5290	81.9	5538	80.4	5875	80.7	6486	82.2	6828	80.3
LRT8 P CD	3330	73.1	3687	72.2	3829	72.9	4192	72.1	4589	71.0	4805	69.8	5097	70.0	5627	71.3	5924	69.7

BEAM SPREAD

TRIM	800-2300 LUMEN	2800-4000 LUMEN	4500-9000 LUMEN
LRT8 HN CS	15˚	16˚	24˚
LRT8 HN CSS	20˚	22˚	28˚
LRT8 HN CD	32˚	36˚	50˚
LRT8 HM CS	48˚	53˚	64˚
LRT8 HM CSS	48˚	53˚	64˚
LRT8 HM CD	60˚	60˚	64˚
LRT8 HW CS	68˚	68˚	70˚
LRT8 HW CSS	68˚	68˚	70˚
LRT8 HW CD	68˚	68˚	70˚

	800-4000 LUMEN	4500-9000 LUMEN
LRT8 P CS	32˚	40˚
LRT8 P CSS	32˚	40˚
LRT8 P CD	70˚	70˚
LRT8 BAF BL	76˚	76˚

CCT MULTIPLIERS

CCT	08LM-23LM	28LM-40LM	45LM-90LM
2700K	0.97	0.9	0.92
3000K	0.99	0.96	0.97
3500K	1	1	1
4000K	1.04	1.02	1.01
5000K	1.09	1.04	1.05

CRI MULTIPLIERS

CRI	08LM-23LM	28LM-40LM	45LM-90LM
80CRI	1	1	1
90CRI	0.85	0.83	0.85
97CRI	0.79	0.80	0.77

PHOTOMETRICS

Distribution Curve | **Distribution Data** | **Output Data** | **Coefficient of Utilization** | **Illuminance Data at 30" Above Floor for a Single Luminaire**

LRT8 13LM 35K + LRT8 HN CS, 3500K LEDs, input watts: 14.70, delivered lumens: 1347.0, LM/W = 91.6, Spacing Criteria: 0.3, test no. PR08171021, tested in accordance to IESNA LM-79.

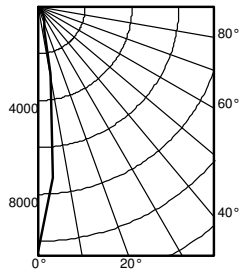

	Ave	Lumens
0	10438	
5	7311	528
15	1046	366
25	604	283
35	284	169
45	0	1
55	0	0
65	0	0
75	0	0
85	0	0
90	0	

Zone	Lumens	% Lamp
0° - 30°	1177.2	87.4
0° - 40°	1345.9	99.9
0° - 60°	1347.0	100.0
0° - 90°	1347.0	100.0
90° - 180°	0.0	0.0
0° - 180°	1347.0	*100.0
*Efficiency		

pf	80%			70%			50%		
pc	50%	30%	10%	50%	30%	10%	50%	30%	10%
pw									
0	119	119	119	116	116	116	111	111	111
1	113	111	109	111	109	107	107	105	104
2	107	104	101	105	103	100	102	100	98
3	102	98	95	101	97	95	98	96	93
4	98	94	91	97	93	90	95	92	89
5	94	90	86	93	89	86	91	88	85
6	90	86	83	90	86	83	88	85	82
7	87	83	80	87	82	79	85	82	79
8	84	80	77	84	80	77	83	79	76
9	82	77	74	81	77	74	80	77	74
10	79	75	72	79	75	72	78	74	72

Mounting Height	Inital FC Center Beam	50% beam - 14.5° Diameter	50% beam - 14.5° FC	10% beam - 29.4° Diameter	10% beam - 29.4° FC
8.0	345.1	1.4	172.6	2.9	34.5
10.0	185.6	1.9	92.8	3.9	18.5
12.0	115.7	2.4	57.8	5.0	11.6
14.0	78.9	2.9	39.5	6.0	7.9
16.0	57.3	3.4	28.6	7.1	5.7

LRT8 13LM 35K + LRT8 HM CS, 3500K LEDs, input watts: 14.70, delivered lumens: 1394.8, LM/W = 94.9, Spacing Criteria: 0.6, test no. PR08171011, tested in accordance to IESNA LM-79.

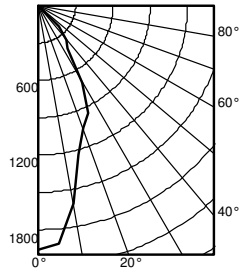

	Ave	Lumens
0	1965	
5	1915	170
15	1236	354
25	949	418
35	417	293
45	237	157
55	0	1
65	0	0
75	2	1
85	0	0
90	0	

Zone	Lumens	% Lamp
0° - 30°	942.3	67.6
0° - 40°	1235.6	88.6
0° - 60°	1393.5	99.9
0° - 90°	1394.8	100.0
90° - 180°	0.0	0.0
0° - 180°	1394.8	*100.0
*Efficiency		

pf	80%			70%			50%		
pc	50%	30%	10%	50%	30%	10%	50%	30%	10%
pw									
0	119	119	119	116	116	116	111	111	111
1	111	108	106	109	106	104	105	103	101
2	103	99	95	101	98	94	98	95	92
3	96	91	87	94	90	86	92	88	85
4	89	84	80	88	83	79	86	82	78
5	84	78	73	83	77	73	81	76	72
6	78	72	68	78	72	68	76	71	67
7	74	68	63	73	67	63	72	67	63
8	69	63	59	69	63	59	68	62	59
9	65	59	55	65	59	55	64	59	55
10	62	56	52	61	56	52	61	55	52

Mounting Height	Inital FC Center Beam	50% beam - 35.3° Diameter	50% beam - 35.3° FC	10% beam - 74.5° Diameter	10% beam - 74.5° FC
8.0	65.0	3.5	32.5	8.4	6.5
10.0	34.9	4.8	17.5	11.4	3.5
12.0	21.8	6.1	10.9	14.4	2.2
14.0	14.9	7.3	7.4	17.5	1.5
16.0	10.8	8.6	5.4	20.5	1.1

LRT8 13LM 35K + LRT8 HW CS, 3500K LEDs, input watts: 14.70, delivered lumens: 1480.5, LM/W = 100.7, Spacing Criteria: 1.2, test no. PR08171191, tested in accordance to IESNA LM-79.

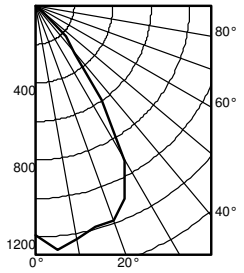

	Ave	Lumens
0	1190	
5	1274	119
15	1188	338
25	1101	495
35	592	373
45	225	148
55	2	4
65	2	1
75	0	1
85	0	1
90	0	

Zone	Lumens	% Lamp
0° - 30°	953.1	64.4
0° - 40°	1326.2	89.6
0° - 60°	1477.8	99.8
0° - 90°	1480.5	100.0
90° - 180°	0.0	0.0
0° - 180°	1480.5	*100.0
*Efficiency		

pf	80%			70%			50%		
pc	50%	30%	10%	50%	30%	10%	50%	30%	10%
pw									
0	119	119	119	116	116	116	111	111	111
1	110	108	106	108	106	104	104	102	101
2	102	98	95	101	97	94	97	94	91
3	95	90	86	93	89	85	91	87	84
4	88	82	78	87	82	77	85	80	77
5	82	76	71	81	75	71	79	74	70
6	77	70	66	76	70	65	74	69	65
7	71	65	61	71	65	61	69	64	60
8	67	61	56	66	60	56	65	60	56
9	63	57	52	62	56	52	61	56	52
10	59	53	49	59	53	49	58	52	49

Mounting Height	Inital FC Center Beam	50% beam - 60.3° Diameter	50% beam - 60.3° FC	10% beam - 83.5° Diameter	10% beam - 83.5° FC
8.0	39.3	6.4	19.7	9.8	3.9
10.0	21.2	8.7	10.6	13.4	2.1
12.0	13.2	11.0	6.6	16.9	1.3
14.0	9.0	13.4	4.5	20.5	0.9
16.0	6.5	15.7	3.3	24.1	0.7

 ©2017 Acuity Brands Lighting, Inc.

PHOTOMETRICS

Distribution Curve | **Distribution Data** | **Output Data** | **Coefficient of Utilization** | **Illuminance Data at 30" Above Floor for a Single Luminaire**

LRT8 45LM 35K + LRT8 HN CS, 3500K LEDs, input watts: 41.41, delivered lumens: 4214.2, LM/W = 101.8, Spacing Criteria: 0.4, test no. PR08171183, tested in accordance to IESNA LM-79.

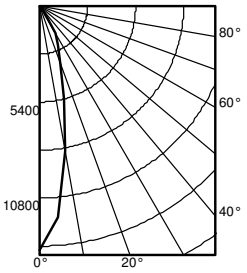

	Ave	Lumens
0	13757	
5	11909	993
15	5389	1509
25	2426	1129
35	884	552
45	0	31
55	0	0
65	0	0
75	0	0
85	0	0
90	0	

Zone	Lumens	% Lamp
0° - 30°	3630.9	86.2
0° - 40°	4183.0	99.3
0° - 60°	4214.2	100.0
0° - 90°	4214.2	100.0
90° - 180°	0.0	0.0
0° - 180°	4214.2	*100.0
*Efficiency		

pf	20%								
pc	80%			70%			50%		
pw	50%	30%	10%	50%	30%	10%	50%	30%	10%
0	119	119	119	116	116	116	111	111	111
1	112	110	108	110	108	106	106	104	103
2	106	102	100	104	101	98	101	99	96
3	100	96	93	99	95	92	96	93	91
4	95	91	87	94	90	87	92	89	86
5	91	86	82	90	85	82	88	84	81
6	87	82	78	86	81	78	84	80	77
7	83	78	74	82	78	74	81	77	74
8	79	74	71	79	74	71	78	74	71
9	76	71	68	76	71	68	75	71	68
10	73	68	65	73	68	65	72	68	65

		50% beam - 23.3°		10% beam - 56.0°	
Mounting Height	Inital FC Center Beam	Diameter	FC	Diameter	FC
8.0	454.8	2.3	227.5	5.9	45.5
10.0	244.6	3.1	122.3	8.0	24.5
12.0	152.4	3.9	76.2	10.1	15.2
14.0	104.0	4.7	52.0	12.2	10.4
16.0	75.5	5.6	37.8	14.4	7.5

LRT8 45LM 35K + LRT8 HM CS, 3500K LEDs, input watts: 41.41, delivered lumens: 3865.2, LM/W = 93.3, Spacing Criteria: 1.0, test no. PR08171088, tested in accordance to IESNA LM-79.

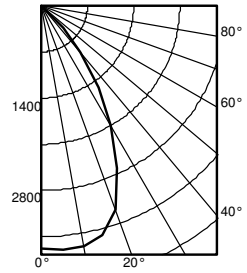

	Ave	Lumens
0	3684	
5	3719	354
15	3589	996
25	2717	1232
35	1504	931
45	468	351
55	0	2
65	0	0
75	0	0
85	0	0
90	0	

Zone	Lumens	% Lamp
0° - 30°	2582.0	66.8
0° - 40°	3512.7	90.9
0° - 60°	3865.2	100.0
0° - 90°	3865.2	100.0
90° - 180°	0.0	0.0
0° - 180°	3865.2	*100.0
*Efficiency		

pf	20%								
pc	80%			70%			50%		
pw	50%	30%	10%	50%	30%	10%	50%	30%	10%
0	119	119	119	116	116	116	111	111	111
1	111	108	106	108	106	104	104	103	101
2	103	99	95	101	97	94	98	95	92
3	96	91	87	94	90	86	92	88	84
4	89	83	79	88	83	79	86	81	78
5	83	77	73	82	77	72	80	75	72
6	78	72	67	77	71	67	75	70	67
7	73	67	62	72	66	62	71	66	62
8	68	62	58	68	62	58	67	61	58
9	64	58	54	64	58	54	63	58	54
10	61	55	51	60	54	51	59	54	50

		50% beam - 52.6°		10% beam - 81.6°	
Mounting Height	Inital FC Center Beam	Diameter	FC	Diameter	FC
8.0	121.8	5.4	60.9	9.5	12.2
10.0	65.5	7.4	32.7	13.0	6.6
12.0	40.8	9.4	20.4	16.4	4.1
14.0	27.9	11.4	13.9	19.9	2.8
16.0	20.2	13.3	10.1	23.3	2.0

LRT8 45LM 35K + LRT8 HW CS, 3500K LEDs, input watts: 41.41, delivered lumens: 4041.8, LM/W = 97.6, Spacing Criteria: 1.2, test no. PR08171089, tested in accordance to IESNA LM-79.

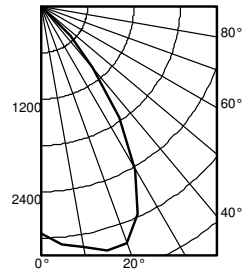

	Ave	Lumens
0	2941	
5	3095	297
15	3280	921
25	2973	1335
35	1761	1079
45	543	403
55	0	6
65	0	0
75	0	0
85	0	0
90	0	

Zone	Lumens	% Lamp
0° - 30°	2553.6	63.2
0° - 40°	3632.7	89.9
0° - 60°	4041.8	100.0
0° - 90°	4041.8	100.0
90° - 180°	0.0	0.0
0° - 180°	4041.8	*100.0
*Efficiency		

pf	20%								
pc	80%			70%			50%		
pw	50%	30%	10%	50%	30%	10%	50%	30%	10%
0	119	119	119	116	116	116	111	111	111
1	110	108	106	108	106	104	104	102	101
2	102	98	95	101	97	93	97	94	91
3	95	90	85	93	89	85	91	87	83
4	88	82	78	87	81	77	85	80	76
5	82	76	71	81	75	71	79	74	70
6	76	70	65	75	69	65	74	69	65
7	71	65	60	70	64	60	69	64	60
8	67	60	56	66	60	56	65	59	55
9	62	56	52	62	56	52	61	55	52
10	59	52	48	58	52	48	57	52	48

		50% beam - 61.7°		10% beam - 85.8°	
Mounting Height	Inital FC Center Beam	Diameter	FC	Diameter	FC
8.0	97.2	6.6	48.6	10.2	9.7
10.0	52.3	9.0	26.1	13.9	5.2
12.0	32.6	11.4	16.3	17.7	3.3
14.0	22.2	13.8	11.1	21.4	2.2
16.0	16.1	16.1	8.1	25.1	1.6

 ©2017 Acuity Brands Lighting, Inc.

PHOTOMETRICS

Distribution Curve | **Distribution Data** | **Output Data** | **Coefficient of Utilization** | **Illuminance Data at 30" Above Floor for a Single Luminaire**

LRT8 90LM 35K + LRT8 HN CS, 3500K LEDs, input watts: 85.03, delivered lumens: 8205.1, LM/W = 6.5, Spacing Criteria: 0.4, test no. PR08171193, tested in accordance to IESNA LM-79.

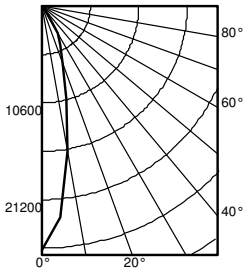

	Ave	Lumens
0	26775	
5	23179	1933
15	10489	2936
25	4722	2198
35	1721	1075
45	1	61
55	0	0
65	0	0
75	2	1
85	0	1
90	3	

Zone	Lumens	% Lamp
0° - 30°	7067.3	86.1
0° - 40°	8142.2	99.2
0° - 60°	8203.5	100.0
0° - 90°	8205.1	100.0
90° - 180°	0.0	0.0
0° - 180°	8205.1	*100.0
*Efficiency		

pf	20%								
pc	80%			70%			50%		
pw	50%	30%	10%	50%	30%	10%	50%	30%	10%
0	119	119	119	116	116	116	111	111	111
1	112	110	108	110	108	106	106	104	103
2	106	102	100	104	101	98	101	98	96
3	100	96	93	99	95	92	96	93	91
4	95	91	87	94	90	87	92	89	86
5	91	86	82	90	85	82	88	84	81
6	87	82	78	86	81	78	84	80	77
7	83	78	74	82	78	74	81	77	74
8	79	74	71	79	74	71	78	74	71
9	76	71	68	76	71	68	75	71	68
10	73	68	65	73	68	65	72	68	65

		50% beam - 23.3°		10% beam - 56.0°	
Mounting Height	Inital FC Center Beam	Diameter	FC	Diameter	FC
8.0	885.1	2.3	442.7	5.9	88.5
10.0	476.0	3.1	238.1	8.0	47.6
12.0	296.7	3.9	148.4	10.1	29.7
14.0	202.5	4.7	101.3	12.2	20.2
16.0	146.9	5.6	73.5	14.4	14.7

LRT8 90LM 35K + LRT8 HM CS, 3500K LEDs, input watts: 85.03, delivered lumens: 7526.2, LM/W = 88.5, Spacing Criteria: 1.0, test no. PR08171098, tested in accordance to IESNA LM-79.

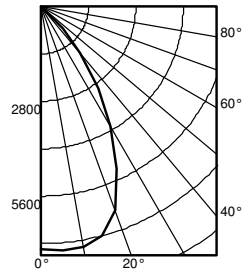

	Ave	Lumens
0	7173	
5	7241	689
15	6989	1939
25	5290	2399
35	2928	1812
45	911	683
55	0	4
65	0	0
75	0	0
85	0	0
90	0	

Zone	Lumens	% Lamp
0° - 30°	5027.6	66.8
0° - 40°	6839.6	90.9
0° - 60°	7526.2	100.0
0° - 90°	7526.2	100.0
90° - 180°	0.0	0.0
0° - 180°	7526.2	*100.0
*Efficiency		

pf	20%								
pc	80%			70%			50%		
pw	50%	30%	10%	50%	30%	10%	50%	30%	10%
0	119	119	119	116	116	116	111	111	111
1	111	108	106	108	106	104	104	103	101
2	103	99	95	101	97	94	98	95	92
3	96	91	87	94	90	86	92	88	84
4	89	83	79	88	83	79	86	81	78
5	83	77	73	82	77	72	80	75	72
6	78	72	67	77	71	67	75	70	67
7	73	67	62	72	66	62	71	66	62
8	68	62	58	68	62	58	67	61	58
9	64	58	54	64	58	54	63	58	54
10	61	55	51	60	54	51	59	54	50

		50% beam - 52.6°		10% beam - 81.6°	
Mounting Height	Inital FC Center Beam	Diameter	FC	Diameter	FC
8.0	237.1	5.4	118.6	9.5	23.7
10.0	127.5	7.4	63.8	13.0	12.8
12.0	79.5	9.4	39.7	16.4	8.0
14.0	54.2	11.4	27.1	19.9	5.4
16.0	39.4	13.3	19.7	23.3	3.9

LRT8 90LM 35K + LRT8 HW CS, 3500K LEDs, input watts: 85.03, delivered lumens: 7869.3, LM/W = 92.5, Spacing Criteria: 1.2, test no. PR08171099, tested in accordance to IESNA LM-79.

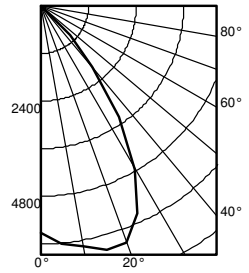

	Ave	Lumens
0	5725	
5	6023	579
15	6384	1793
25	5787	2598
35	3427	2100
45	1057	785
55	3	13
65	0	1
75	0	1
85	0	0
90	0	

Zone	Lumens	% Lamp
0° - 30°	4970.1	63.2
0° - 40°	7070.1	89.8
0° - 60°	7867.8	100.0
0° - 90°	7869.3	100.0
90° - 180°	0.0	0.0
0° - 180°	7869.3	*100.0
*Efficiency		

pf	20%								
pc	80%			70%			50%		
pw	50%	30%	10%	50%	30%	10%	50%	30%	10%
0	119	119	119	116	116	116	111	111	111
1	110	108	106	108	106	104	104	102	101
2	102	98	95	101	97	93	97	94	91
3	95	90	85	93	89	85	91	87	83
4	88	82	78	87	81	77	85	80	76
5	82	76	71	81	75	71	79	74	70
6	76	70	65	75	69	65	74	69	65
7	71	65	60	70	64	60	69	64	60
8	67	60	56	66	60	56	65	59	55
9	62	56	52	62	56	52	61	55	52
10	58	52	48	58	52	48	57	52	48

		50% beam - 61.7°		10% beam - 85.8°	
Mounting Height	Inital FC Center Beam	Diameter	FC	Diameter	FC
8.0	189.3	6.6	94.6	10.2	18.9
10.0	101.8	9.0	50.9	13.9	10.2
12.0	63.4	11.4	31.7	17.7	6.3
14.0	43.3	13.7	21.6	21.4	4.3
16.0	31.4	16.1	15.7	25.1	3.1

 ©2017 Acuity Brands Lighting, Inc.

PHOTOMETRICS

Distribution Curve | **Distribution Data** | **Output Data** | **Coefficient of Utilization** | **Illuminance Data at 30" Above Floor for a Single Luminaire**

LRT8 13LM 35K + LRT8 P CS, 3500K LEDs, input watts: 14.70, delivered lumens: 1177.8, LM/W = 80.1, Spacing Criteria: 0.5, test no. PR08171193, tested in accordance to IESNA LM-79.

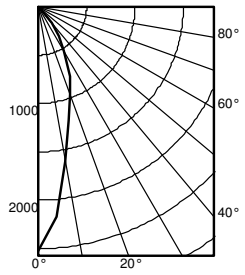

	Ave	Lumens
0	2530	
5	2177	186
15	1216	345
25	790	349
35	377	231
45	53	63
55	0	3
65	0	0
75	0	0
85	3	2
90	0	

Zone	Lumens	% Lamp
0° - 30°	880.0	74.7
0° - 40°	1110.6	94.3
0° - 60°	1176.0	99.8
0° - 90°	1177.8	100.0
90° - 180°	0.0	0.0
0° - 180°	1177.8	*100.0
	*Efficiency	

pf	80%			70%			50%		
pc	80%			70%			50%		
pw	50%	30%	10%	50%	30%	10%	50%	30%	10%
0	119	119	119	116	116	116	111	111	111
1	111	109	107	109	107	105	105	103	102
2	104	100	97	102	99	96	99	96	94
3	97	93	89	96	92	88	94	90	87
4	92	86	82	90	86	82	88	84	81
5	86	81	77	85	80	76	84	79	76
6	81	76	72	81	75	72	79	75	71
7	77	71	67	76	71	67	75	70	67
8	73	67	64	72	67	63	71	67	63
9	69	64	60	69	64	60	68	63	60
10	66	60	57	66	60	57	65	60	57

Mounting Height	Inital FC Center Beam	50% beam - 26.3° Diameter	50% beam - 26.3° FC	10% beam - 66.3° Diameter	10% beam - 66.3° FC
8.0	83.6	2.6	41.8	7.2	8.4
10.0	45.0	3.5	22.5	9.8	4.5
12.0	28.0	4.4	14.0	12.4	2.8
14.0	19.1	5.4	9.6	15.0	1.9
16.0	13.9	6.3	6.9	17.6	1.4

LRT8 45LM 35K + LRT8 P CS, 3500K LEDs, input watts: 41.41, delivered lumens: 3455.4, LM/W = 83.4, Spacing Criteria: 0.6, test no. PR08171098, tested in accordance to IESNA LM-79.

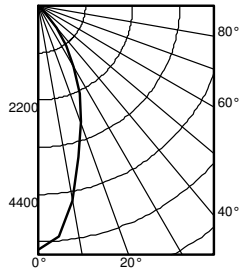

	Ave	Lumens
0	5703	
5	5408	484
15	3645	1017
25	2269	1026
35	1149	707
45	213	211
55	5	11
65	0	0
75	0	0
85	0	0
90	0	

Zone	Lumens	% Lamp
0° - 30°	2527.3	73.1
0° - 40°	3234.2	93.6
0° - 60°	3455.4	100.0
0° - 90°	3455.4	100.0
90° - 180°	0.0	0.0
0° - 180°	3455.4	*100.0
	*Efficiency	

pf	80%			70%			50%		
pc	80%			70%			50%		
pw	50%	30%	10%	50%	30%	10%	50%	30%	10%
0	119	119	119	116	116	116	111	111	111
1	111	109	107	109	107	105	105	103	102
2	104	100	97	102	99	96	99	96	94
3	97	92	89	96	91	88	93	90	86
4	91	86	82	90	85	81	88	84	80
5	86	80	76	85	80	76	83	78	75
6	81	75	71	80	75	71	78	74	70
7	76	70	66	75	70	66	74	69	66
8	72	66	62	71	66	62	70	65	62
9	68	63	59	68	62	59	67	62	58
10	65	59	56	64	59	55	64	59	55

Mounting Height	Inital FC Center Beam	50% beam - 34.7° Diameter	50% beam - 34.7° FC	10% beam - 71.6° Diameter	10% beam - 71.6° FC
8.0	188.5	3.4	94.3	7.9	18.9
10.0	101.4	4.7	50.7	10.8	10.1
12.0	63.2	5.9	31.6	13.7	6.3
14.0	43.1	7.2	21.6	16.6	4.3
16.0	31.3	8.4	15.6	19.5	3.1

LRT8 90LM 35K + LRT8 P CS, 3500K LEDs, input watts: 85.03, delivered lumens: 6726.6, LM/W = 79.1, Spacing Criteria: 0.6, test no. PR08171099, tested in accordance to IESNA LM-79.

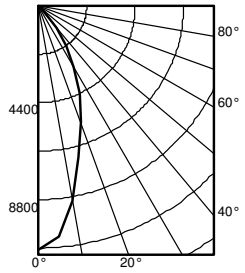

	Ave	Lumens
0	11103	
5	10528	943
15	7097	1980
25	4417	1997
35	2236	1376
45	414	410
55	10	21
65	0	0
75	0	0
85	0	0
90	0	

Zone	Lumens	% Lamp
0° - 30°	4920.0	73.1
0° - 40°	6295.7	93.6
0° - 60°	6726.3	100.0
0° - 90°	6726.6	100.0
90° - 180°	0.0	0.0
0° - 180°	6726.6	*100.0
	*Efficiency	

pf	80%			70%			50%		
pc	80%			70%			50%		
pw	50%	30%	10%	50%	30%	10%	50%	30%	10%
0	119	119	119	116	116	116	111	111	111
1	111	109	107	109	107	105	105	103	102
2	104	100	97	102	99	96	99	96	94
3	97	92	89	96	91	88	93	90	86
4	91	86	82	90	85	81	88	84	80
5	86	80	76	85	80	76	83	78	75
6	81	75	71	80	75	71	78	74	70
7	76	70	66	75	70	66	74	69	66
8	72	66	62	71	66	62	70	65	62
9	68	63	59	68	62	59	67	62	58
10	65	59	56	64	59	55	64	59	55

Mounting Height	Inital FC Center Beam	50% beam - 34.7° Diameter	50% beam - 34.7° FC	10% beam - 71.6° Diameter	10% beam - 71.6° FC
8.0	367.0	3.4	183.5	7.9	36.7
10.0	197.4	4.7	98.7	10.8	19.7
12.0	123.0	5.9	61.5	13.7	12.3
14.0	84.0	7.2	42.0	16.6	8.4
16.0	60.9	8.4	30.5	19.5	6.1

 ©2017 Acuity Brands Lighting, Inc.

PERFORMANCE DATA

LUMINAIRES SPACED 2′ FROM WALL

Catalog Number: LRT8 90LM 35K 120 G4 80CRI ZT; LRT8 HWS CSS **Spread:** Single Wall **Test #:** PR03161095P

Single Unit						Lamp	Multiple Units On 2′ Centers*			Multiple Units On 3′ Centers*			Multiple Units On 4′ Centers*		
Lateral Distance From Fixture 2′ From Wall						BXRC-35E10K0-D-73-SE	Spaced 2′ From Wall			Spaced 2′ From Wall			Spaced 2′ From Wall		
0′	1′	2′	3′	4′	5′	Distance From Ceiling	CL		CL	CL		CL	CL		CL
53	39	19	9	5	5	1′	93	91	93	69	61	69	61	37	61
96	68	32	14	8	7	2′	165	160	165	122	104	122	108	65	108
115	87	43	17	9	8	3′	207	204	207	148	136	148	130	87	130
85	72	46	22	11	8	4′	183	183	183	126	129	126	102	92	102
52	50	39	23	13	9	5′	142	145	142	97	103	97	73	80	73
33	36	30	22	14	10	6′	109	117	109	76	83	76	56	63	56
25	28	24	19	14	11	7′	91	98	91	64	71	64	48	53	48
20	23	20	16	13	11	8′	77	83	77	54	61	54	42	44	42
15	18	19	13	11	9	9′	60	66	60	44	51	44	34	35	34
10	13	11	10	9	6	10′	44	48	44	34	38	34	25	28	25

LUMINAIRES SPACED 3′ FROM WALL

Catalog Number: LRT8 90LM 35K 120 G4 80CRI ZT; LRT8 HWS CSS **Spread:** Single Wall **Test #:** PR03161095P

Single Unit						Lamp	Multiple Units On 3′ Centers*			Multiple Units On 4′ Centers*			Multiple Units On 6′ Centers*		
Lateral Distance From Fixture 3′ From Wall						BXRC-35E10K0-D-73-SE	Spaced 3′ From Wall			Spaced 3′ From Wall			Spaced 3′ From Wall		
0′	1′	2′	3′	4′	5′	Distance From Ceiling	CL		CL	CL		CL	CL		CL
20	18	13	9	6	6	1′	37	37	37	30	29	30	23	14	23
36	33	23	15	10	8	2′	66	65	66	54	50	54	41	25	41
49	42	29	18	12	9	3′	84	82	84	68	61	68	54	31	54
57	50	35	22	13	10	4′	99	97	99	79	74	79	62	39	62
51	47	35	24	15	11	5′	99	99	99	76	76	76	57	45	57
41	39	32	24	17	12	6′	89	90	89	69	71	69	48	44	48
32	31	28	23	17	13	7′	78	79	78	60	62	60	40	41	40
23	25	22	19	15	13	8′	64	70	64	50	54	50	33	36	33
17	19	17	15	13	11	9′	52	58	52	40	45	40	27	29	27
12	14	14	11	10	9	10′	41	44	41	31	35	31	20	23	20

LUMINAIRES SPACED 4′ FROM WALL

Catalog Number: LRT8 90LM 35K 120 G4 80CRI ZT; LRT8 HWS CSS **Spread:** Single Wall **Test #:** PR03161095P

Single Unit						Lamp	Multiple Units On 3′ Centers*			Multiple Units On 4′ Centers*			Multiple Units On 6′ Centers*		
Lateral Distance From Fixture 4′ From Wall						BXRC-35E10K0-D-73-SE	Spaced 4′ From Wall			Spaced 4′ From Wall			Spaced 4′ From Wall		
0′	1′	2′	3′	4′	5′	Distance From Ceiling	CL		CL	CL		CL	CL		CL
12	11	9	8	6	6	1′	25	26	25	21	21	21	16	13	16
22	21	17	13	10	8	2′	47	48	47	37	38	37	29	24	29
27	25	20	16	12	10	3′	57	57	57	46	45	46	34	29	34
33	29	23	18	13	11	4′	68	68	68	54	52	54	40	34	40
37	34	27	21	15	12	5′	78	79	78	62	60	62	45	38	45
36	33	28	22	17	13	6′	80	81	80	63	63	63	45	41	45
32	30	26	22	17	13	7′	78	78	78	61	61	61	42	41	42
27	26	23	19	16	14	8′	70	73	70	55	57	55	39	38	39
21	20	19	16	14	12	9′	59	62	59	46	48	46	32	32	32
15	15	15	13	12	10	10′	46	48	46	36	38	36	25	27	25

*Based on minimum of five luminaires. Reflectances: 80, 50, 20. Values are rounded to nearest whole footcandle.

Fixtures tested to IES recommended standard for solid state lighting per LM-79-08. Photometric performance on a single unit represents a baseline of performance for the fixture. Results may vary in the field.

 ©2017 Acuity Brands Lighting, Inc.

PERFORMANCE DATA

LUMINAIRES SPACED 2′ FROM WALL

Catalog Number: LRT8 90LM 35K 120 G4 80CRI ZT; LRT8 WS CSS **Spread:** Single Wall **Test #:** PR08171041

Single Unit						Lamp	Multiple Units On 2′ Centers*			Multiple Units On 3′ Centers*			Multiple Units On 4′ Centers*		
Lateral Distance From Fixture 2′ From Wall						BXRC-35E10K0-D-73-SE	Spaced 2′ From Wall			Spaced 2′ From Wall			Spaced 2′ From Wall		
0′	1′	2′	3′	4′	5′	Distance From Ceiling	CL		CL	CL		CL	CL		CL
63	47	22	10	6	5	1′	111	110	111	83	72	83	73	44	73
80	58	29	14	8	7	2′	142	140	142	105	92	105	92	59	92
74	58	33	16	10	8	3′	144	143	144	103	98	103	88	67	88
62	51	34	19	11	8	4′	136	135	136	97	93	97	78	69	78
47	43	31	20	13	9	5′	121	124	121	86	86	86	66	66	66
33	35	28	21	14	10	6′	105	113	105	74	80	74	56	59	56
25	29	25	19	15	11	7′	94	102	94	66	73	66	50	55	50
21	25	21	17	14	12	8′	83	90	83	58	67	58	45	47	45
16	20	17	14	12	10	9′	67	74	67	48	56	48	37	39	37
11	14	13	11	10	7	10′	50	56	50	38	44	38	28	32	28

LUMINAIRES SPACED 3′ FROM WALL

Catalog Number: LRT8 90LM 35K 120 G4 80CRI ZT; LRT8 WS CSS **Spread:** Single Wall **Test #:** PR08171041

Single Unit						Lamp	Multiple Units On 3′ Centers*			Multiple Units On 4′ Centers*			Multiple Units On 6′ Centers*		
Lateral Distance From Fixture 3′ From Wall						BXRC-35E10K0-D-73-SE	Spaced 3′ From Wall			Spaced 3′ From Wall			Spaced 3′ From Wall		
0′	1′	2′	3′	4′	5′	Distance From Ceiling	CL		CL	CL		CL	CL		CL
28	25	17	11	8	6	1′	50	50	50	40	38	40	31	19	31
36	32	23	15	10	8	2′	65	65	65	53	50	53	41	25	41
39	35	25	17	11	9	3′	72	71	72	57	54	57	44	28	44
38	35	27	18	12	10	4′	72	72	72	57	56	57	44	32	44
35	32	25	19	13	10	5′	72	72	72	57	56	57	41	34	41
33	30	24	19	15	11	6′	69	70	69	56	55	56	39	35	39
29	27	23	19	15	13	7′	66	69	66	53	53	53	36	34	36
23	24	21	17	14	13	8′	59	65	59	46	51	46	32	31	32
17	19	17	15	13	11	9′	50	56	50	38	44	38	27	27	27
12	14	14	10	10	10	10′	41	46	41	31	37	31	21	22	21

LUMINAIRES SPACED 4′ FROM WALL

Catalog Number: LRT8 90LM 35K 120 G4 80CRI ZT; LRT8 WS CSS **Spread:** Single Wall **Test #:** PR08171041

Single Unit						Lamp	Multiple Units On 3′ Centers*			Multiple Units On 4′ Centers*			Multiple Units On 6′ Centers*		
Lateral Distance From Fixture 4′ From Wall						BXRC-35E10K0-D-73-SE	Spaced 4′ From Wall			Spaced 4′ From Wall			Spaced 4′ From Wall		
0′	1′	2′	3′	4′	5′	Distance From Ceiling	CL		CL	CL		CL	CL		CL
18	16	13	10	8	7	1′	37	38	37	29	30	29	22	18	22
23	21	17	13	11	9	2′	49	50	49	39	40	39	30	25	30
25	24	19	15	12	10	3′	55	55	55	44	43	44	32	28	32
27	25	20	16	13	11	4′	57	58	57	46	46	46	34	30	34
26	25	21	17	13	11	5′	59	59	59	47	47	47	34	31	34
25	24	21	17	14	12	6′	59	60	59	47	47	47	34	32	34
24	23	19	17	14	12	7′	59	60	59	46	47	46	34	31	34
22	21	19	15	13	13	8′	56	58	56	45	46	45	33	29	33
19	18	16	14	12	11	9′	49	51	49	39	40	39	29	27	29
14	14	13	11	10	9	10′	41	43	41	33	34	33	22	24	22

*Based on minimum of five luminaires. Reflectances: 80, 50, 20. Values are rounded to nearest whole footcandle.

Fixtures tested to IES recommended standard for solid state lighting per LM-79-08. Photometric performance on a single unit represents a baseline of performance for the fixture. Results may vary in the field.

 ©2017 Acuity Brands Lighting, Inc.

CONTROLS

EXAMPLE
Group Fixture Control*
*Appiication diagram applies for fixtures with eldoLED drivers only.

nPS 80 EZ Dimming/Control Pack (qty: 2 required)
nPODM 2P DX Dual On/Off/Dim Push-Button WallPod
nCM ADCX Daylight Sensor with Automatic Dimming Control
nCM PDT 9 Dual Technology Occupancy Sensor

Description: This design provides a dual on/off/dim wall station that enables manual control of the fixtures in Row A and Row B separately. Additionally, a daylight harvesting sensor is provided so the lights in Row B can be configured to dim automatically when daylight is available. An occupancy sensor turns off all lights when the space is vacant.

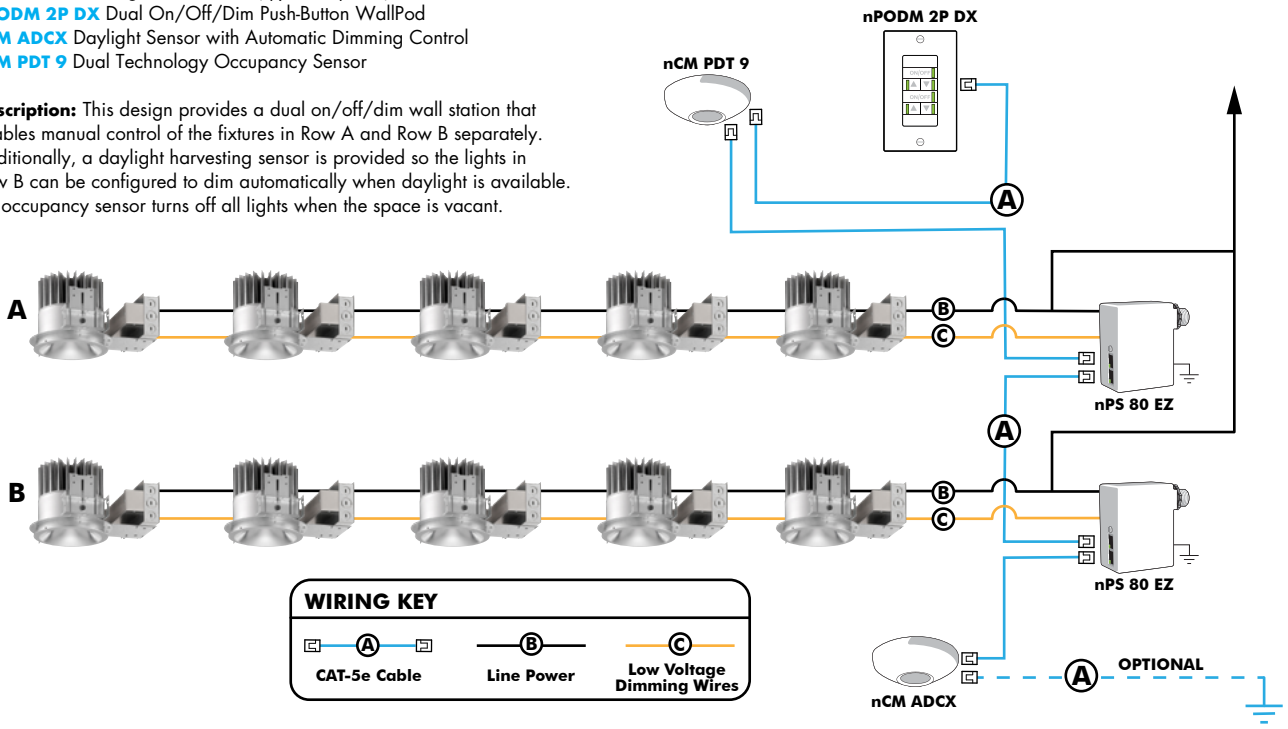

Choose Wall Controls
nLight offers multiple styles of wall controls - each with varying features and user experience.



Push-Button Wallpod
Traditional tactile buttons and LED user feedback



Graphic Wallpod
Full color touch screen provides a sophisticated look and feel

nLight® Controls Accessories:			
Order as separate catalog number. Visit www.sencorswitch.com/nLight for complete listing of nLight controls.			
WallPod Stations	**Model number**	**Occupancy sensors**	**Model Number**
On/Off	nPODM (Color)	Small motion 360º, ceiling (PIR/dual Tech)	nCM 9 / nCM PDT 9
On/Off & Raise/Lower	nPOD DX (Color)	Large motion 360º, ceiling (PIR/dual tech)	nCM 10 / nCM PDT 10
Graphic Touchscreen	nPOD GFX (Color)	Wide View (PIR/dual tech)	nWV 16 / nWV PDT 16
Photocell controls	**Model Number**	Wall Switch w/ Raise/Lower (PIR/dual tech)	nWSX LV DX / nWSX PDT LV DX
Dimming	nCM ADCX	**Cat-5 cables (plenum rated)**	**Model Number**
		10', CAT5 10FT	CAT5 10FT J1
		15, CAT5 15FT	CAT5 15FT J1

Capable Luminaire

This item is an A+ capable luminaire, which has been designed and tested to provide consistent color appearance and out-of-the-box control compatibility with simple commissioning.

- All configurations of this luminaire meet the Acuity Brand's specification for chromatic consistency.
- This luminaire is part of an A+ Certified solution for nLight control networks when ordered with drivers marked by a Shaded background*
- This Luminaire is part of an A+ Certified solution for nLight control networks, providing advanced control functionality at the luminaire level, when selection includes driver and control options marked by a shaded background*

To learn more about A+, visit www.acuitybrands.com/aplus.

*See ordering tree for details

 ©2017 Acuity Brands Lighting, Inc.

ENVIRONMENTALLY FRIENDLY, ENERGY EFFICIENT

- One fixture converts nearly any manufacturers incandescent, CFL or H.I.D. fixtures with a rough-in inner diameter of 10" to 11"diameter to high efficiency LED
- All installation can be performed from below the ceiling with out removing existing fixture
- Energy savings up to 50-60% vs. CFL and HID
- Superior-quality white LED light output using Chip on Board technology
- No harmful ultraviolet or infrared wavelengths • No lead or mercury

PRODUCT SPECIFICATIONS

Enabled with Atrius™: These products are enabled with Atrius, making them part of the Atrius Sensory Network and ready to deliver valuable data and connectivity to the Atrius Platform. For more information concerning Atrius solutions, please refer to www.acuitybrands.com/Atrius.

OPTICS

Hyperbolic: Unique hyperbolic shape optimized for small, directional LED source, maximizes fixture efficiency while creating the "Silent Ceiling" appearance by reducing lamp image and aperture brightness • Geometry of hyperbolic curve provides unique aperture appearance and smoother light distribution

Parabolic/Lens: Computer-optimized parabolic reflector with frosted convexed lens regressed into cone provides uniform distribution with no striations

ELECTRICAL

LED Light Engine: Compact light source delivers uniform illumination without pixilation, enabling excellent beam control • 2SDCM (5000K within 3SDCM) • 80, 90 & 97 CRI • Replaceable light engine with push in wire connections mounts directly to heat sink and is easily replaceable

Passive Cooling: Aluminum heat sink integrated directly with housing provides superior thermal management to ensure the long life of LED

LED Driver: Power factor >0.9 • Easily replaceable from above or below the ceiling

Dimming: Dimmable via 0-10V protocol standard • Optional drivers available for use with Lutron EcoSystem, 2-wire dimmers DMXR, or DALI • For a list of compatible dimmers, see LED-DIM.

Life: Rated for 60,000 hours at 70% lumen maintenance • Available with optional Lumen Depreciation Indicator (LDI)

Operation Temperature: -20° C to 50° C

A+ Capable options indicated by this color background

J7.1.91G4

indy™

800 TO 9000 LUMEN 10" LED RETRO-FIT

HYPERBOLIC / PARABOLIC

LRT10 SERIES

Type	Cat. No.

Project: _____

Notes: _____

Emergency Battery Pack (Optional) output: Provides a minimum of 600 (BR), or 1000 (HBR) lumens for a minimum duration of 90 minutes • BRT20C option is CEC Title 20 compliant

Warranty: 5 years when used in accordance with manufacturing guidelines.

Specifications subject to change without notice.



ORDERING INFORMATION

Complete Catalog# Example Includes (Rough-In, option, reflector, accessory) Ordering Example: LRT10 08LM 27K MVOLT G4 80CRI ZT LDI HW CS PF

ROUGH-IN

Series	Lumen Package	Color Temperature	Voltage	Generation	CRI	Driver	Rough-In Options
LRT10 10" L-Series Retrofit Downlight	**08LM** 800 Lumens **13LM** 1300 Lumens **15LM** 1500 Lumens **17LM** 1700 Lumens **23LM** 2300 Lumens **28LM** 2800 Lumens **33LM** 3300 Lumens **40LM** 4000 Lumens **45LM** 4500 Lumens **50LM** 5000 Lumens **55LM** 5500 Lumens **60LM** 6000 Lumens **65LM** 6500 Lumens **70LM** 7000 Lumens **75LM** 7500 Lumens **80LM** 8000 Lumens **85LM** 8500 Lumens **90LM** 9000 Lumens	**27K** 2700K **30K** 3000K **35K** 3500K **40K** 4000K **50K** 5000K	**120** 120 Volt **277** 277 Volt **347** 347 Volt **MVOLT**[1] Multi-Volt (120-277)	**G4** Gen 4	**80CRI** 80+ CRI **90CRI** 90+ CRI **97CRI**[2] 97+ CRI	**DALI** DALI Control Dimming **DMXR** DMX/RDM Driver **EDAB**[4,5] eldoLED SOLOdrive DALI. Logarithmic dimming to <1% **EDXB**[3,4,6] eldoLED POWERdrive DMX/RDM w/ Phoenix Connectors. Logarithmic dimming to <1% **EZ10**[4,5] eldoLED 0-10V ECOdrive. Linear dimming to 10% min. **EZ1**[4,5] eldoLED 0-10V ECOdrive. Linear dimming to 1% min. **EZB**[4,5] eldoLED 0-10V SOLOdrive. Logarithmic dimming to <1% **FD**[5,7] Forward or Reverse Phase Dimming Driver **FDL**[7,8,15] Forward Phase Dimming Lutron Driver **PD**[8,15] Lutron Ecosystem Dimming Driver **ZT**[14] 0-10V Dimming	**F**[3,9] Fuse and Fuse Holder **CP**[10] Chicago Plenum **LDI** Lumen Depreciation Indicator **BR**[3,4,12] Emergency Battery Pack w/Remote Test Switch **BRT20C**[3,4,12] Emergency Battery Pack w/ Remote Test Switch, CEC Title 20 Compliant **HBR**[3,4,12] High Lumen Emergency Battery Pack w/Remote Test Switch **NL**[9,11] nLight® Dimming Pack Controls **NLER**[9,11] nLight® dimming pack controls. nLER controls fixtures on emergency circuit **INC**[7] Medium base socket adapter for quick retro-fit of incandescent fixtures **AE1BN**[16] Atrius™ enabled, Bluetooth® beacons, network and in fixture power supply

REFLECTOR

To order reflector separately, use "LRT10" prefix before reflector option values. Ex: LRT10 HW CS PF

See notes on page 2.

Trim Style	Finish	Trim Options
HM[12] Hyperbolic Medium **HN**[12] Hyperbolic Narrow **HW**[12] Hyperbolic Wide **P** Parabolic	**CD** Clear Diffuse **CS** Clear Specular **CSS** Clear Semi-Specular **WH** White	**PF**[13] White Flange **WET** Wet Location

 ©2017 Acuity Brands Lighting, Inc.

Ordering Notes
1 Only 800, 1300, 1500 and 1700 lumen fixtures are MVOLT.
2 2700K & 3000K only.
3 Not available with 347V.
4 Not compatible with LDI.
5 Not available for 6000 lumens and up.
6 Not available for 4000 and 5500 lumens and up.
7 120V only.
8 Not available for 5000 lumens and up.
9 Specify voltage.
10 BR, BRT20C, HBR, EDXB, NL, NLER not compatible with CP.
11 Only compatible with EZ10, EZ1 & EZB (nPS 80 EZ) drivers and 60LM-90LM ZT (nPP16 D) drivers.
12 Not compatible with WET.
13 Not required when specifying WH finish.
14 Not compatible with NL between 800 and 5500 lumens.
15 Not compatible with BR, BRT20C, HBR, or LDI.
16 See AE1BN notes in following table for compatibility with other options.

AE1BN Notes
Only compatible with ZT, EZ1, EZB, EZ10 drivers.
CP, BR, BRT20C, HBR, NL, NLER not compatible with AE1BN.
Recommended ceiling height of 30' and under; not intended for use on ceilings greater than 40'.

The Bluetooth® word mark and logos are registered trademarks owned by Bluetooth SIG, Inc. and any use of such marks by Acuity Brands Lighting is under license.

PRODUCT SPECIFICATIONS (cont.)

MECHANICAL

Retro-fit Housing: Housing installs from below ceiling • Secured in place by four (4) tension clips • Tension clips accommodate ceilings from 1/2" to 1-1/8" thick • Integral heat sink conducts heat away from LED light engine • Driver is accessible from below the ceiling and can be upgraded to accommodate future technology improvements.

TRIMS:

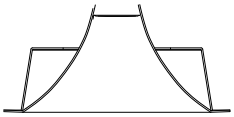

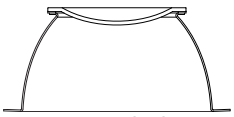

APERTURE: 8-7/8" Dia.
CEILING CUTOUT: 11" Dia.
OVERLAP: 12-3/8" Dia.

PASSIVE COOLING DIMENSIONS: 800 - 9000 Lumens

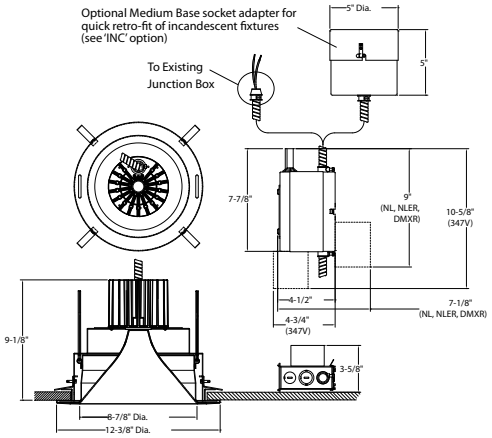

Atrius Enabled

PASSIVE COOLING DIMENSIONS: 800 - 9000 Lumens

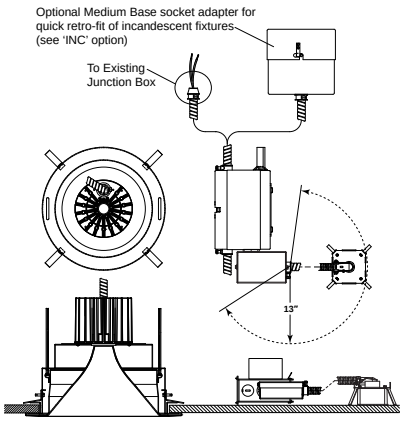

ENERGY STAR® certified

	PRODUCT#	FIXTURE CONFIGURATIONS = ENERGY STAR	
ENERGY STAR	MVOLT 120V/277V LRT10 (WW)LM (XX)K MVOLT G4 (YY)CRI (ZZ) (CC)[1]	Lumen Package: CCT: Voltage: CRI: Trim Type: Trim Color/Finish:	WW = 08[2], 13[2], 15, 17 XX = 27, 30, 35, 40, 50 MVOLT (120V-277V) YY = 80, 90, 97 ZZ = HN, HM, HW, P CC = CS, CSS, CD
ENERGY STAR	120V/277V LRT10 (WW)LM (XX)K (V) G4 (YY)CRI (ZZ) (CC)[1]	Lumen Package: CCT: Voltage: CRI: Trim Type: Trim Color/Finish:	WW = 17, 23, 28, 33, 40, 45, 50, 55, 60, 65, 70, 75, 80, 85, 90 XX = 27, 30, 35, 40, 50 V = 120, 277 YY = 80, 90, 97 ZZ = HN, HM, HW, P CC = CS, CSS, CD

1 EDAB, EDXB, PD and FDL options are not ENERGY STAR® certified.
2 Indicated lumen packages are not ENERGY STAR® certified with -DMXR or -DALI options when used with 277 volts.

LABELS AND LISTINGS

UL & cUL listed for damp locations • UL spacing requirement for 4000 lumen and above: minimum of 4' between fixture centers, 3" overhead clearance, 2' from fixture center to side wall • RoHS compliant • EMI complies with FCC 47, Part 15, Class A • ENERGY STAR® certified, see table for designated products • I.B.E.W. Union made • ARRA Compliant

ENGINEERING DATA: 347 Volt available, consult factory																		
VOLTAGE	**120**																	
LIGHT ENGINE LUMENS	**800**	**1300**	**1500**	**1700**	**2300**	**2800**	**3300**	**4000**	**4500**	**5000**	**5500**	**6000**	**6500**	**7000**	**7500**	**8000**	**8500**	**9000**
CCT	**2700K/3000K/3500K/4000K/5000K**																	
INPUT CURRENT	0.063	0.098	0.115	0.132	0.197	0.238	0.280	0.351	0.345	0.381	0.427	0.439	0.483	0.541	0.573	0.607	0.656	0.710
INPUT WATTAGE	7.53	11.74	13.66	15.82	23.52	28.46	33.62	42.14	41.41	45.54	51.08	52.51	58.11	64.59	68.84	72.83	78.87	85.03
INPUT FREQUENCY	50/60Hz	50/60Hz	50/60Hz	50/60Hz	50/60Hz	50/60Hz	50/60Hz	50/60Hz	50/60Hz	50/60Hz	50/60Hz	50/60Hz	50/60Hz	50/60Hz	50/60Hz	50/60Hz	50/60Hz	50/60Hz
THD%	6.42	5.19	4.61	3.86	5.09	5.46	4.43	4.53	6.03	6.03	6.23	6.44	6.54	7.32	7.58	7.75	8.37	8.05
POWER FACTOR	0.993	0.993	0.992	0.994	0.994	0.995	0.997	0.998	0.996	0.996	0.996	0.996	0.996	0.995	0.995	0.996	0.996	0.996
VOLTAGE	**277**																	
LIGHT ENGINE LUMENS	**800**	**1300**	**1500**	**1700**	**2300**	**2800**	**3300**	**4000**	**4500**	**5000**	**5500**	**6000**	**6500**	**7000**	**7500**	**8000**	**8500**	**9000**
CCT	**2700K/3000K/3500K/4000K/5000K**																	
INPUT CURRENT	0.031	0.048	0.056	0.063	0.093	0.108	0.131	0.158	0.161	0.175	0.195	0.202	0.221	0.251	0.265	0.268	0.290	0.310
INPUT WATTAGE	7.87	11.84	13.81	15.89	23.65	28.19	33.83	41.68	41.74	45.80	51.02	52.35	57.64	64.22	68.40	71.29	77.27	83.16
INPUT FREQUENCY	50/60Hz	50/60Hz	50/60Hz	50/60Hz	50/60Hz	50/60Hz	50/60Hz	50/60Hz	50/60Hz	50/60Hz	50/60Hz	50/60Hz	50/60Hz	50/60Hz	50/60Hz	50/60Hz	50/60Hz	50/60Hz
THD%	12.00	11.62	11.31	11.34	9.93	9.04	10.48	8.79	9.15	8.07	9.85	11.12	10.97	13.07	12.83	12.96	13.53	12.56
POWER FACTOR	0.904	0.885	0.887	0.907	0.918	0.943	0.932	0.953	0.934	0.943	0.944	0.933	0.942	0.921	0.931	0.957	0.962	0.965

HYPERBOLIC

DELIVERED LUMENS/LUMENS PER WATT (35K 80CRI)

	800 35K		1300 35K		1500 35K		1700 35K		2300 35K		2800 35K		3300 35K		4000 35K		4500 35K	
TRIM/FINISH	Lumens	LPW	Lumens	LPW	Lumens	LPW	Lumens	LPW	Lumens	LPW	Lumens	LPW	Lumens	LPW	Lumens	LPW	Lumens	LPW
LRT10 HN CS	745	98.9	1242	105.8	1435	105.1	1634	103.3	2200	93.5	2652	93.2	3087	91.8	3753	89.1	4100	99.0
LRT10 HN CSS	694	92.2	1157	98.6	1337	97.9	1523	96.2	2050	87.1	2471	86.8	2876	85.5	3497	83.0	3762	90.8
LRT10 HN CD	630	83.6	1050	89.5	1214	88.8	1382	87.3	1860	79.1	2243	78.8	2610	77.6	3173	75.3	3343	80.7
LRT10 HM CS	760	101.0	1268	108.0	1465	107.3	1668	105.4	2246	95.5	2708	95.1	3151	93.7	3831	90.9	3911	94.4
LRT10 HM CSS	717	95.2	1195	101.8	1381	101.1	1572	99.4	2117	90.0	2552	89.7	2970	88.3	3611	85.7	3786	91.4
LRT10 HM CD	630	83.7	1051	89.6	1215	88.9	1383	87.4	1862	79.2	2245	78.9	2613	77.7	3177	75.4	3296	79.6
LRT10 HW CS	709	94.1	1182	100.7	1365	100.0	1555	98.3	2093	89.0	2523	88.7	2937	87.3	3570	84.7	3754	90.7
LRT10 HW CSS	696	92.5	1162	98.9	1342	98.3	1528	96.6	2057	87.5	2480	87.2	2887	85.9	3510	83.3	3600	86.9
LRT10 HW CD	604	80.3	1008	85.9	1165	85.3	1326	83.8	1785	75.9	2153	75.6	2505	74.5	3046	72.3	3173	76.6
	5000 35K		**5500 35K**		**6000 35K**		**6500 35K**		**7000 35K**		**7500 35K**		**8000 35K**		**8500 35K**		**9000 35K**	
TRIM/FINISH	Lumens	LPW	Lumens	LPW	Lumens	LPW	Lumens	LPW	Lumens	LPW	Lumens	LPW	Lumens	LPW	Lumens	LPW	Lumens	LPW
LRT10 HN CS	4487	98.5	4969	97.3	5160	98.3	5649	97.2	6184	95.7	6474	94.0	6868	94.3	7583	96.1	7983	93.9
LRT10 HN CSS	4117	90.4	4559	89.2	4734	90.2	5183	89.2	5674	87.8	5940	86.3	6301	86.5	6957	88.2	7324	86.1
LRT10 HN CD	3658	80.3	4051	79.3	4207	80.1	4606	79.3	5042	78.1	5278	76.7	5599	76.9	6182	78.4	6508	76.5
LRT10 HM CS	4280	94.0	4739	92.8	4922	93.7	5388	92.7	5898	91.3	6175	89.7	6551	89.9	7232	91.7	7614	89.5
LRT10 HM CSS	4144	91.0	4588	89.8	4765	90.7	5217	89.8	5711	88.4	5979	86.8	6343	87.1	7002	88.8	7372	86.7
LRT10 HM CD	3607	79.2	3994	78.2	4148	79.0	4541	78.1	4971	77.0	5204	75.6	5521	75.8	6095	77.3	6417	75.5
LRT10 HW CS	4109	90.2	4550	89.1	4725	90.0	5173	89.0	5662	87.7	5928	86.1	6289	86.4	6943	88.0	7309	86.0
LRT10 HW CSS	3940	86.5	4363	85.4	4531	86.3	4960	85.4	5430	84.1	5685	82.6	6030	82.8	6658	84.4	7009	82.4
LRT10 HW CD	3473	76.3	3846	75.3	3994	76.1	4373	75.2	4786	74.1	5011	72.8	5316	73.0	5869	74.4	6179	72.7

PARABOLIC

DELIVERED LUMENS/LUMENS PER WATT (35K 80CRI)

	800 35K		1300 35K		1500 35K		1700 35K		2300 35K		2800 35K		3300 35K		4000 35K		4500 35K	
TRIM/FINISH	Lumens	LPW	Lumens	LPW	Lumens	LPW	Lumens	LPW	Lumens	LPW	Lumens	LPW	Lumens	LPW	Lumens	LPW	Lumens	LPW
LRT10 P CS	641	85.1	1069	91.0	1235	90.4	1406	88.9	1893	80.5	2282	80.2	2656	79.0	3229	76.6	3608	87.1
LRT10 P CSS	650	86.4	1085	92.4	1253	91.8	1427	90.2	1921	81.7	2316	81.4	2695	80.2	3277	77.8	3662	88.4
LRT10 P CD	582	77.3	971	82.7	1122	82.1	1277	80.7	1719	73.1	2073	72.8	2412	71.8	2933	69.6	3283	79.3
	5000 35K		**5500 35K**		**6000 35K**		**6500 35K**		**7000 35K**		**7500 35K**		**8000 35K**		**8500 35K**		**9000 35K**	
TRIM/FINISH	Lumens	LPW	Lumens	LPW	Lumens	LPW	Lumens	LPW	Lumens	LPW	Lumens	LPW	Lumens	LPW	Lumens	LPW	Lumens	LPW
LRT10 P CS	3949	86.7	4373	85.6	4541	86.5	4972	85.6	5442	84.3	5698	82.8	6045	83.0	6673	84.6	7026	82.6
LRT10 P CSS	4008	88.0	4438	86.9	4609	87.8	5046	86.8	5523	85.5	5782	84.0	6134	84.2	6772	85.9	7130	83.8
LRT10 P CD	3593	78.9	3978	77.9	4132	78.7	4523	77.8	4951	76.7	5184	75.3	5499	75.5	6071	77.0	6392	75.2

BEAM SPREAD

TRIM	800-4000 LUMEN	4500-9000 LUMEN
LRT10 HN CS	16°	25°
LRT10 HN CSS	21°	29°
LRT10 HN CD	38°	51°
LRT10 HM CS	56°	58°
LRT10 HM CSS	56°	62°
LRT10 HM CD	64°	65°
LRT10 HW CS	70°	73°
LRT10 HW CSS	70°	73°
LRT10 HW CD	70°	73°
LRT10 P CS	60°	60°
LRT10 P CSS	60°	60°
LRT10 P CD	60°	60°

CCT MULTIPLIERS

CCT	08LM-40LM	45LM-90LM
2700K	0.9	0.92
3000K	0.96	0.97
3500K	1	1
4000K	1.02	1.01
5000K	1.04	1.05

CRI MULTIPLIERS

CRI	08LM-40LM	45LM-90LM
80CRI	1	1
90CRI	0.83	0.85
97CRI	0.80	0.77

 ©2017 Acuity Brands Lighting, Inc.

PHOTOMETRICS

Distribution Curve | **Distribution Data** | **Output Data** | **Coefficient of Utilization** | **Illuminance Data at 30" Above Floor for a Single Luminaire**

LRT10 90LM 35K + LRT10 HN CS, 3500K LEDs, input watts: 85.03, delivered lumens: 7742.2, LM/W = 91.1, Spacing Criteria: 0.4, test no. PR08170496, tested in accordance to IESNA LM-79.

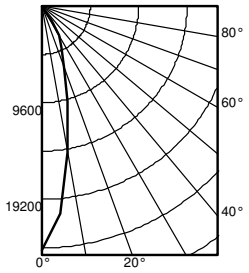

	Ave	Lumens
0	24290	
5	20715	1744
15	9820	2744
25	4572	2133
35	1732	1063
45	17	55
55	4	3
65	0	0
75	0	0
85	0	0
90	0	

Zone	Lumens	% Lamp
0° - 30°	6621.2	85.5
0° - 40°	7684.1	99.3
0° - 60°	7742.2	100.0
0° - 90°	7742.2	100.0
90° - 180°	0.0	0.0
0° - 180°	7742.2	*100.0
*Efficiency		

pf	20%								
pc	80%			70%			50%		
pw	50%	30%	10%	50%	30%	10%	50%	30%	10%
0	119	119	119	116	116	116	111	111	111
1	112	110	108	110	108	106	106	104	103
2	106	102	99	104	101	98	101	98	96
3	100	96	93	99	95	92	96	93	90
4	95	90	87	94	90	86	92	88	85
5	90	86	82	89	85	82	88	84	81
6	86	81	78	85	81	77	84	80	77
7	82	77	74	82	77	74	81	76	73
8	79	74	70	78	74	70	77	73	70
9	76	71	67	75	70	67	74	70	67
10	73	68	64	72	68	64	71	67	64

		50% beam - 23.6°		10% beam - 57.7°	
Mounting Height	Inital FC Center Beam	Diameter	FC	Diameter	FC
8.0	803.0	2.3	401.6	6.1	80.3
10.0	431.8	3.1	215.9	8.3	43.2
12.0	269.1	4.0	134.6	10.5	26.9
14.0	183.7	4.8	91.9	12.7	18.4
16.0	133.3	5.6	66.7	14.9	13.3

LRT10 90LM 35K + LRT10 HM CS, 3500K LEDs, input watts: 85.03, delivered lumens: 7523.4, LM/W = 88.5, Spacing Criteria: 0.9, test no. PR08170352, tested in accordance to IESNA LM-79.

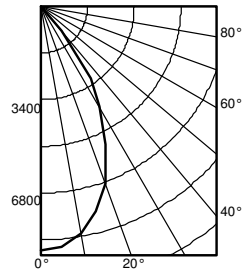

	Ave	Lumens
0	8906	
5	8775	821
15	7740	2150
25	5547	2523
35	3174	1802
45	23	224
55	0	1
65	3	2
75	0	0
85	0	0
90	0	

Zone	Lumens	% Lamp
0° - 30°	5494.7	73.0
0° - 40°	7296.9	97.0
0° - 60°	7521.6	100.0
0° - 90°	7523.4	100.0
90° - 180°	0.0	0.0
0° - 180°	7523.4	*100.0
*Efficiency		

pf	20%								
pc	80%			70%			50%		
pw	50%	30%	10%	50%	30%	10%	50%	30%	10%
0	119	119	119	116	116	116	111	111	111
1	111	109	106	109	107	105	105	103	102
2	104	100	96	102	98	95	99	96	93
3	97	92	88	96	91	88	93	89	86
4	91	85	81	90	85	81	87	83	80
5	85	80	75	84	79	75	82	78	74
6	80	74	70	79	74	70	78	73	69
7	75	70	65	75	69	65	73	69	65
8	71	65	61	71	65	61	69	64	61
9	67	61	58	67	61	57	66	61	57
10	64	58	54	63	58	54	62	57	54

		50% beam - 47.8°		10% beam - 76.7°	
Mounting Height	Inital FC Center Beam	Diameter	FC	Diameter	FC
8.0	294.4	4.9	147.2	8.7	29.4
10.0	158.3	6.7	79.2	11.9	15.8
12.0	98.7	8.4	49.3	15.0	9.9
14.0	67.3	10.2	33.7	18.2	6.7
16.0	48.9	12.0	24.4	21.4	4.9

LRT10 90LM 35K + LRT10 HW CS, 3500K LEDs, input watts: 85.03, delivered lumens: 7445.4, LM/W = 87.6, Spacing Criteria: 1.2, test no. PR08170491, tested in accordance to IESNA LM-79.

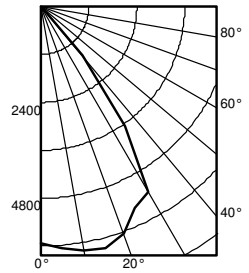

	Ave	Lumens
0	5922	
5	6085	586
15	6277	1754
25	5575	2596
35	3651	2183
45	94	326
55	1	1
65	0	0
75	0	0
85	0	0
90	0	

Zone	Lumens	% Lamp
0° - 30°	4935.8	66.3
0° - 40°	7118.4	95.6
0° - 60°	7445.4	100.0
0° - 90°	7445.4	100.0
90° - 180°	0.0	0.0
0° - 180°	7445.4	*100.0
*Efficiency		

pf	20%								
pc	80%			70%			50%		
pw	50%	30%	10%	50%	30%	10%	50%	30%	10%
0	119	119	119	116	116	116	111	111	111
1	111	108	106	108	106	104	104	103	101
2	103	99	95	101	97	94	98	95	92
3	96	91	86	94	90	86	92	88	84
4	89	83	79	88	83	79	86	81	78
5	83	77	73	82	76	72	80	75	72
6	78	71	67	77	71	67	75	70	66
7	73	66	62	72	66	62	71	65	61
8	68	62	58	67	62	57	66	61	57
9	64	58	54	63	57	53	62	57	53
10	60	54	50	60	54	50	59	53	50

		50% beam - 63.3°		10% beam - 81.6°	
Mounting Height	Inital FC Center Beam	Diameter	FC	Diameter	FC
8.0	195.8	6.8	97.9	9.5	19.6
10.0	105.3	9.2	52.6	12.9	10.5
12.0	65.6	11.7	32.8	16.4	6.6
14.0	44.8	14.2	22.4	19.8	4.5
16.0	32.5	16.6	16.2	23.3	3.2

 ©2017 Acuity Brands Lighting, Inc.

PHOTOMETRICS

Distribution Curve | **Distribution Data** | **Output Data** | **Coefficient of Utilization** | **Illuminance Data at 30" Above Floor for a Single Luminaire**

LRT10 13LM 35K + LRT10 HN CS, 3500K LEDs, input watts: 14.70, delivered lumens: 1176.8, LM/W = 80.1, Spacing Criteria: 0.3, test no. PR08170487, tested in accordance to IESNA LM-79.

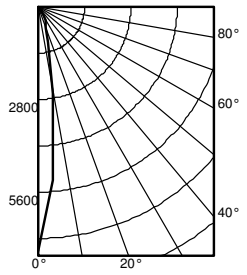

	Ave	Lumens
0	7394	
5	5277	404
15	1098	358
25	536	255
35	284	158
45	0	2
55	0	0
65	0	0
75	0	0
85	0	0
90	0	

Zone	Lumens	% Lamp
0° - 30°	1016.5	86.4
0° - 40°	1174.9	99.8
0° - 60°	1176.8	100.0
0° - 90°	1176.8	100.0
90° - 180°	0.0	0.0
0° - 180°	1176.8	*100.0
*Efficiency		

pf										
pc		80%			70%			50%		
pw	50%	30%	10%	50%	30%	10%	50%	30%	10%	20%
0	119	119	119	116	116	116	111	111	111	
1	112	110	109	110	109	107	106	105	104	
2	107	104	101	105	102	100	102	100	98	
3	102	98	95	100	97	94	98	95	92	
4	97	93	89	96	92	89	94	91	88	
5	93	88	85	92	88	85	90	87	84	
6	89	85	81	88	84	81	87	83	81	
7	86	81	78	85	81	78	84	80	77	
8	83	78	75	82	78	75	81	77	75	
9	80	75	72	79	75	72	79	75	72	
10	77	73	70	77	73	70	76	72	70	

		50% beam - 15.6°		10% beam - 35.8°	
Mounting Height	Inital FC Center Beam	Diameter	FC	Diameter	FC
8.0	244.4	1.5	122.1	3.6	24.4
10.0	131.4	2.1	65.7	4.8	13.1
12.0	81.9	2.6	40.9	6.1	8.2
14.0	55.9	3.2	27.9	7.4	5.6
16.0	40.6	3.7	20.3	8.7	4.1

LRT10 13LM 35K + LRT10 HM CS, 3500K LEDs, input watts: 14.70, delivered lumens: 1266.4, LM/W = 86.1, Spacing Criteria: 0.7, test no. PR08170482, tested in accordance to IESNA LM-79.

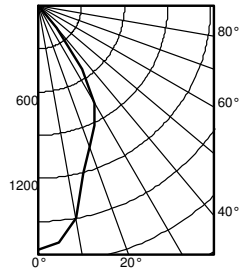

	Ave	Lumens
0	1700	
5	1651	151
15	1202	343
25	920	420
35	539	314
45	6	38
55	0	0
65	0	0
75	0	0
85	0	0
90	0	

Zone	Lumens	% Lamp
0° - 30°	914.2	72.2
0° - 40°	1228.5	97.0
0° - 60°	1266.4	100.0
0° - 90°	1266.4	100.0
90° - 180°	0.0	0.0
0° - 180°	1266.4	*100.0
*Efficiency		

pf										
pc		80%			70%			50%		
pw	50%	30%	10%	50%	30%	10%	50%	30%	10%	20%
0	119	119	119	116	116	116	111	111	111	
1	111	109	106	109	107	105	105	103	102	
2	104	100	96	102	98	95	99	96	93	
3	97	92	88	96	91	88	93	89	86	
4	91	85	81	90	85	81	87	83	80	
5	85	80	75	84	79	75	82	78	74	
6	80	74	70	79	74	70	78	73	69	
7	75	70	65	75	69	65	73	69	65	
8	71	65	61	71	65	61	69	64	61	
9	67	61	58	67	61	57	66	61	57	
10	64	58	54	63	58	54	62	57	54	

		50% beam - 41.0°		10% beam - 75.7°	
Mounting Height	Inital FC Center Beam	Diameter	FC	Diameter	FC
8.0	56.2	4.1	28.1	8.5	5.6
10.0	30.2	5.6	15.1	11.7	3.0
12.0	18.8	7.1	9.4	14.8	1.9
14.0	12.9	8.6	6.4	17.9	1.3
16.0	9.3	10.1	4.7	21.0	0.9

LRT10 13LM 35K + LRT10 HW CS, 3500K LEDs, input watts: 14.70, delivered lumens: 1241.8, LM/W = 84.5, Spacing Criteria: 1.2, test no. PR08170483, tested in accordance to IESNA LM-79.

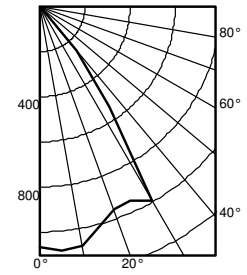

	Ave	Lumens
0	1069	
5	1089	103
15	1012	286
25	947	445
35	541	355
45	16	52
55	0	0
65	0	0
75	0	0
85	0	0
90	0	

Zone	Lumens	% Lamp
0° - 30°	834.6	67.2
0° - 40°	1189.5	95.8
0° - 60°	1241.8	100.0
0° - 90°	1241.8	100.0
90° - 180°	0.0	0.0
0° - 180°	1241.8	*100.0
*Efficiency		

pf										
pc		80%			70%			50%		
pw	50%	30%	10%	50%	30%	10%	50%	30%	10%	20%
0	119	119	119	116	116	116	111	111	111	
1	111	108	106	109	106	104	104	103	101	
2	103	99	95	101	97	94	98	95	92	
3	96	91	87	94	90	86	92	88	85	
4	89	84	79	88	83	79	86	81	78	
5	83	77	73	82	77	72	80	76	72	
6	78	72	67	77	71	67	75	70	67	
7	73	67	62	72	66	62	71	66	62	
8	68	62	58	68	62	58	67	61	57	
9	64	58	54	64	58	54	63	57	54	
10	60	54	50	60	54	50	59	54	50	

		50% beam - 62.9°		10% beam - 80.6°	
Mounting Height	Inital FC Center Beam	Diameter	FC	Diameter	FC
8.0	35.3	6.7	17.7	9.3	3.5
10.0	19.0	9.2	9.5	12.7	1.9
12.0	11.8	11.6	5.9	16.1	1.2
14.0	8.1	14.1	4.0	19.5	0.8
16.0	5.9	16.5	2.9	22.9	0.6

 ©2017 Acuity Brands Lighting, Inc.

PHOTOMETRICS

Distribution Curve | **Distribution Data** | **Output Data** | **Coefficient of Utilization** | **Illuminance Data at 30" Above Floor for a Single Luminaire**

LRT10 45LM 35K + LRT10 HN CS, 3500K LEDs, input watts: 41.41, delivered lumens: 3976.5, LM/W = 96.0, Spacing Criteria: 0.4, test no. PR08170486, tested in accordance to IESNA LM-79.

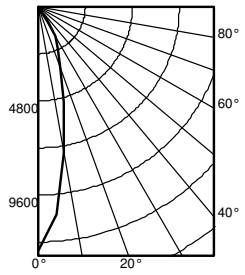

	Ave	Lumens
0	12475	
5	10639	896
15	5043	1409
25	2348	1096
35	890	546
45	9	29
55	2	2
65	0	0
75	0	0
85	0	0
90	0	

Zone	Lumens	% Lamp
0° - 30°	3400.5	85.5
0° - 40°	3946.5	99.2
0° - 60°	3976.5	100.0
0° - 90°	3976.5	100.0
90° - 180°	0.0	0.0
0° - 180°	3976.5	*100.0
	*Efficiency	

pf	80%			70%			50%		
pc	20%			20%			20%		
pw	50%	30%	10%	50%	30%	10%	50%	30%	10%
0	119	119	119	116	116	116	111	111	111
1	112	110	108	110	108	106	106	104	103
2	106	102	99	104	101	98	101	98	96
3	100	96	93	99	95	92	96	93	90
4	95	90	87	94	90	86	92	88	85
5	90	86	82	89	85	82	88	84	81
6	86	81	78	85	81	77	84	80	77
7	82	77	74	82	77	74	81	76	73
8	79	74	70	78	74	70	77	73	70
9	76	71	67	75	70	67	74	70	67
10	73	68	64	72	68	64	71	67	64

Mounting Height	Inital FC Center Beam	50% beam - 23.6° Diameter	50% beam - 23.6° FC	10% beam - 57.7° Diameter	10% beam - 57.7° FC
8.0	412.4	2.3	206.2	6.1	41.2
10.0	221.8	3.1	110.9	8.3	22.2
12.0	138.2	4.0	69.1	10.5	13.8
14.0	94.3	4.8	47.2	12.7	9.4
16.0	68.4	5.6	34.2	14.9	6.8

LRT10 45LM 35K + LRT10 HM CS, 3500K LEDs, input watts: 41.41, delivered lumens: 3863.8, LM/W = 93.3, Spacing Criteria: 0.9, test no. PR08170342, tested in accordance to IESNA LM-79.

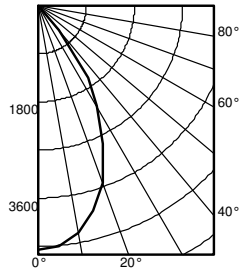

	Ave	Lumens
0	4576	
5	4509	422
15	3977	1105
25	2850	1296
35	1631	926
45	12	115
55	0	0
65	0	0
75	0	0
85	0	0
90	0	

Zone	Lumens	% Lamp
0° - 30°	2823.2	73.1
0° - 40°	3749.1	97.0
0° - 60°	3863.8	100.0
0° - 90°	3863.8	100.0
90° - 180°	0.0	0.0
0° - 180°	3863.8	*100.0
	*Efficiency	

pf	80%			70%			50%		
pc	20%			20%			20%		
pw	50%	30%	10%	50%	30%	10%	50%	30%	10%
0	119	119	119	116	116	116	111	111	111
1	111	109	106	109	107	105	105	103	102
2	104	100	96	102	98	95	99	96	93
3	97	92	88	96	91	88	93	89	86
4	91	85	81	90	85	81	88	83	80
5	85	80	75	84	79	75	82	78	74
6	80	74	70	79	74	70	78	73	69
7	75	70	65	75	69	65	73	69	65
8	71	65	61	71	65	61	69	64	61
9	67	61	58	67	61	57	66	61	57
10	64	58	54	63	58	54	62	57	54

Mounting Height	Inital FC Center Beam	50% beam - 47.8° Diameter	50% beam - 47.8° FC	10% beam - 76.7° Diameter	10% beam - 76.7° FC
8.0	151.3	4.9	75.6	8.7	15.1
10.0	81.4	6.7	40.7	11.9	8.1
12.0	50.7	8.4	25.4	15.0	5.1
14.0	34.6	10.2	17.3	18.2	3.5
16.0	25.1	12.0	12.6	21.4	2.5

LRT10 45LM 35K + LRT10 HW CS, 3500K LEDs, input watts: 41.41, delivered lumens: 3823.4, LM/W = 92.3, Spacing Criteria:1.2, test no. PR08170481, tested in accordance to IESNA LM-79.

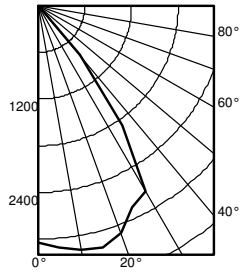

	Ave	Lumens
0	3042	
5	3126	301
15	3224	901
25	2864	1333
35	1875	1121
45	48	167
55	0	0
65	0	0
75	0	0
85	0	0
90	0	

Zone	Lumens	% Lamp
0° - 30°	2535.4	66.3
0° - 40°	3656.4	95.6
0° - 60°	3823.4	100.0
0° - 90°	3823.4	100.0
90° - 180°	0.0	0.0
0° - 180°	3823.4	*100.0
	*Efficiency	

pf	80%			70%			50%		
pc	20%			20%			20%		
pw	50%	30%	10%	50%	30%	10%	50%	30%	10%
0	119	119	119	116	116	116	111	111	111
1	111	108	106	108	106	104	104	103	101
2	103	99	95	101	97	94	98	95	92
3	96	91	86	94	90	86	92	88	84
4	89	83	79	88	83	79	86	81	78
5	83	77	73	82	76	72	80	75	72
6	78	71	67	77	71	67	75	70	66
7	73	66	62	72	66	62	71	65	61
8	68	62	58	67	62	57	66	61	57
9	64	58	54	63	57	53	62	57	53
10	60	54	50	60	54	50	59	53	50

Mounting Height	Inital FC Center Beam	50% beam - 63.2° Diameter	50% beam - 63.2° FC	10% beam - 81.6° Diameter	10% beam - 81.6° FC
8.0	100.6	6.8	50.3	9.5	10.1
10.0	54.1	9.2	27.0	12.9	5.4
12.0	33.7	11.7	16.9	16.4	3.4
14.0	23.0	14.2	11.5	19.8	2.3
16.0	16.7	16.6	8.3	23.3	1.7

 ©2017 Acuity Brands Lighting, Inc.

PHOTOMETRICS

Distribution Curve | **Distribution Data** | **Output Data** | **Coefficient of Utilization** | **Illuminance Data at 30" Above Floor for a Single Luminaire**

LRT10 13LM 35K + LRT10 P CS, 3500K LEDs, input watts: 14.70, delivered lumens: 1059.7, LM/W = 72.1, Spacing Criteria: 1.0, test no. PR08170485, tested in accordance to IESNA LM-79.

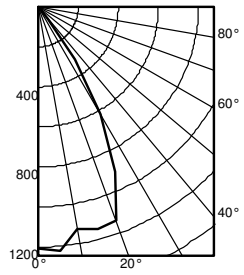

	Ave	Lumens
0	1208	
5	1226	113
15	1149	323
25	906	404
35	321	203
45	7	17
55	0	0
65	0	0
75	0	0
85	0	0
90	0	

Zone	Lumens	% Lamp
0° - 30°	840.2	79.3
0° - 40°	1042.7	98.4
0° - 60°	1059.7	100.0
0° - 90°	1059.7	100.0
90° - 180°	0.0	0.0
0° - 180°	1059.7	*100.0
*Efficiency		

pf	80%			70%			50%		
pc	80%			70%			50%		
pw	50%	30%	10%	50%	30%	10%	50%	30%	10%
0	119	119	119	116	116	116	111	111	111
1	111	109	107	109	107	105	105	103	102
2	104	100	97	102	99	96	99	96	94
3	97	93	89	96	92	88	94	90	87
4	92	86	82	90	86	82	88	84	81
5	86	81	77	85	80	76	83	79	76
6	81	76	71	80	75	71	79	74	71
7	77	71	67	76	71	67	75	70	66
8	72	67	63	72	66	63	71	66	62
9	69	63	59	68	63	59	67	62	59
10	65	59	56	65	59	56	64	59	56

		50% beam - 52.4°		10% beam - 73.5°	
Mounting Height	Inital FC Center Beam	Diameter	FC	Diameter	FC
8.0	39.9	5.4	20.0	8.2	4.0
10.0	21.5	7.4	10.7	11.2	2.1
12.0	13.4	9.4	6.7	14.2	1.3
14.0	9.1	11.3	4.6	17.2	0.9
16.0	6.6	13.3	3.3	20.2	0.7

LRT10 45LM 35K + LRT10 P CS, 3500K LEDs, input watts: 41.41, delivered lumens: 3574.8, LM/W = 86.3, Spacing Criteria: 1.0, test no. PR08170484, tested in accordance to IESNA LM-79.

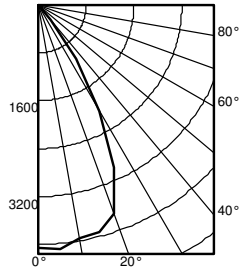

	Ave	Lumens
0	4053	
5	4102	385
15	3925	1096
25	3000	1333
35	1085	685
45	30	69
55	4	3
65	4	2
75	2	2
85	0	0
90	0	

Zone	Lumens	% Lamp
0° - 30°	2814.3	78.7
0° - 40°	3499.0	97.9
0° - 60°	3570.8	99.9
0° - 90°	3574.8	100.0
90° - 180°	0.0	0.0
0° - 180°	3574.8	*100.0
*Efficiency		

pf	80%			70%			50%		
pc	80%			70%			50%		
pw	50%	30%	10%	50%	30%	10%	50%	30%	10%
0	119	119	119	116	116	116	111	111	111
1	111	109	107	109	107	105	105	103	102
2	104	100	97	102	99	96	99	96	94
3	97	93	89	96	92	88	93	90	87
4	91	86	82	90	85	82	88	84	81
5	86	81	76	85	80	76	83	79	75
6	81	75	71	80	75	71	79	74	71
7	76	71	67	76	70	67	75	70	66
8	72	67	63	72	66	63	71	66	62
9	68	63	59	68	63	59	67	62	59
10	65	59	56	64	59	56	64	59	55

		50% beam - 52.1°		10% beam - 73.8°	
Mounting Height	Inital FC Center Beam	Diameter	FC	Diameter	FC
8.0	134.0	5.4	67.0	8.3	13.4
10.0	72.1	7.3	36.0	11.3	7.2
12.0	44.9	9.3	22.4	14.3	4.5
14.0	30.6	11.3	15.3	17.3	3.1
16.0	22.2	13.2	11.1	20.3	2.2

LRT10 90LM 35K + LRT10 P CS, 3500K LEDs, input watts: 85.03, delivered lumens: 6963.4, LM/W = 81.9, Spacing Criteria: 1.0, test no. PR08170494, tested in accordance to IESNA LM-79.

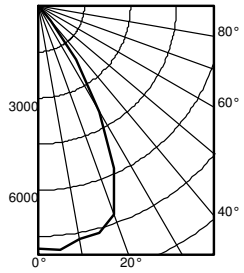

	Ave	Lumens
0	7892	
5	7988	750
15	7642	2134
25	5843	2597
35	2113	1333
45	59	134
55	8	6
65	7	5
75	4	4
85	0	1
90	0	

Zone	Lumens	% Lamp
0° - 30°	5480.5	78.7
0° - 40°	6814.0	97.9
0° - 60°	6954.4	99.9
0° - 90°	6963.4	100.0
90° - 180°	0.0	0.0
0° - 180°	6963.4	*100.0
*Efficiency		

pf	80%			70%			50%		
pc	80%			70%			50%		
pw	50%	30%	10%	50%	30%	10%	50%	30%	10%
0	119	119	119	116	116	116	111	111	111
1	111	109	107	109	107	105	105	103	102
2	104	100	97	102	99	96	99	96	94
3	97	93	89	96	92	88	93	90	87
4	91	86	82	90	85	82	88	84	81
5	86	80	76	85	80	76	83	79	75
6	81	75	71	80	75	71	79	74	71
7	76	71	67	76	70	67	75	70	66
8	72	67	63	72	66	63	71	66	62
9	68	63	59	68	63	59	67	62	59
10	65	59	56	64	59	56	64	59	55

		50% beam - 52.1°		10% beam - 73.8°	
Mounting Height	Inital FC Center Beam	Diameter	FC	Diameter	FC
8.0	260.9	5.4	130.4	8.3	26.1
10.0	140.3	7.3	70.2	11.3	14.0
12.0	87.4	9.3	43.7	14.3	8.7
14.0	59.7	11.3	29.8	17.3	6.0
16.0	43.3	13.2	21.7	20.3	4.3

 ©2017 Acuity Brands Lighting, Inc.

CONTROLS

EXAMPLE
Group Fixture Control*
*Appiication diagram applies for fixtures with eldoLED drivers only.

nPS 80 EZ Dimming/Control Pack (qty: 2 required)
nPODM 2P DX Dual On/Off/Dim Push-Button WallPod
nCM ADCX Daylight Sensor with Automatic Dimming Control
nCM PDT 9 Dual Technology Occupancy Sensor

Description: This design provides a dual on/off/dim wall station that enables manual control of the fixtures in Row A and Row B separately. Additionally, a daylight harvesting sensor is provided so the lights in Row B can be configured to dim automatically when daylight is available. An occupancy sensor turns off all lights when the space is vacant.

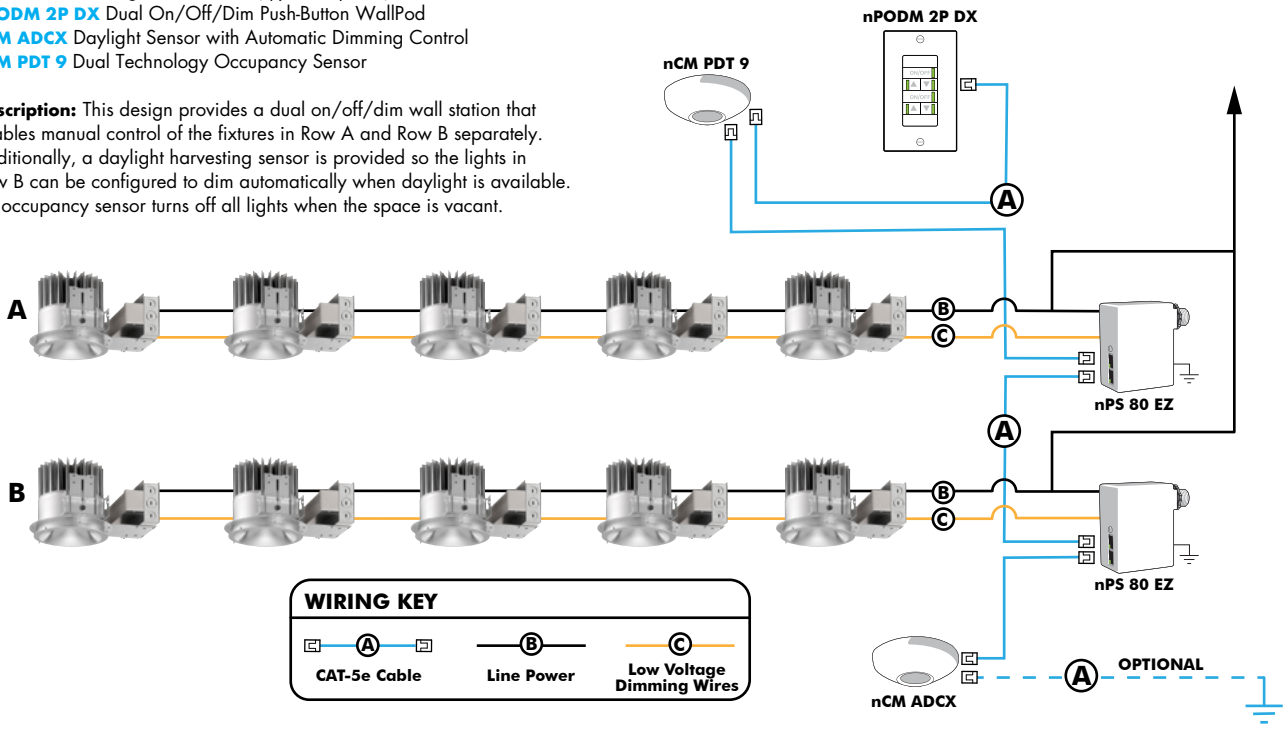

Choose Wall Controls
nLight offers multiple styles of wall controls - each with varying features and user experience.



Push-Button Wallpod
Traditional tactile buttons and LED user feedback



Graphic Wallpod
Full color touch screen provides a sophisticated look and feel

nLight® Controls Accessories:			
Order as separate catalog number. Visit www.sencorswitch.com/nLight for complete listing of nLight controls.			
WallPod Stations	**Model number**	**Occupancy sensors**	**Model Number**
On/Off	nPODM (Color)	Small motion 360º, ceiling (PIR/dual Tech)	nCM 9 / nCM PDT 9
On/Off & Raise/Lower	nPOD DX (Color)	Large motion 360º, ceiling (PIR/dual tech)	nCM 10 / nCM PDT 10
Graphic Touchscreen	nPOD GFX (Color)	Wide View (PIR/dual tech)	nWV 16 / nWV PDT 16
Photocell controls	**Model Number**	Wall Switch w/ Raise/Lower (PIR/dual tech)	nWSX LV DX / nWSX PDT LV DX
Dimming	nCM ADCX	**Cat-5 cables (plenum rated)**	**Model Number**
		10', CAT5 10FT	CAT5 10FT J1
		15, CAT5 15FT	CAT5 15FT J1

Capable Luminaire

This item is an A+ capable luminaire, which has been designed and tested to provide consistent color appearance and out-of-the-box control compatibility with simple commissioning.

- All configurations of this luminaire meet the Acuity Brand's specification for chromatic consistency.
- This luminaire is part of an A+ Certified solution for nLight control networks when ordered with drivers marked by a Shaded background*
- This Luminaire is part of an A+ Certified solution for nLight control networks, providing advanced control functionality at the luminaire level, when selection includes driver and control options marked by a shaded background*

To learn more about A+, visit www.acuitybrands.com/aplus.

*See ordering tree for details

 ©2017 Acuity Brands Lighting, Inc.

ENVIRONMENTALLY FRIENDLY, ENERGY EFFICIENT

- One fixture converts nearly any manufacturers incandescent, CFL or H.I.D. fixtures with a rough-in inner diameter of 11-3/4″ to 12-3/4″ diameter to high efficiency LED
- All installation can be performed from below the ceiling with out removing existing fixture
- Energy savings up to 50-60% vs. CFL and HID
- Superior-quality white LED light output using Chip on Board technology
- No harmful ultraviolet or infrared wavelengths • No lead or mercury

PRODUCT SPECIFICATIONS

Enabled with Atrius™: These products are enabled with Atrius, making them part of the Atrius Sensory Network and ready to deliver valuable data and connectivity to the Atrius Platform. For more information concerning Atrius solutions, please refer to www.acuitybrands.com/Atrius.

OPTICS

Hyperbolic: Unique hyperbolic shape optimized for small, directional LED source, maximizes fixture efficiency while creating the "Silent Ceiling" appearance by reducing lamp image and aperture brightness • Geometry of hyperbolic curve provides unique aperture appearance and smoother light distribution

Parabolic/Lens: Computer-optimized parabolic reflector with frosted convexed lens regressed into cone provides uniform distribution with no striations

ELECTRICAL

LED Light Engine: Compact light source delivers uniform illumination without pixilation, enabling excellent beam control • 2SDCM (5000K within 3SDCM) • 80, 90 & 97 CRI • Replaceable light engine with push in wire connections mounts directly to heat sink and is easily replaceable

Passive Cooling: Aluminum heat sink integrated directly with housing provides superior thermal management to ensure the long life of LED

LED Driver: Power factor >0.9 • Easily replaceable from above or below the ceiling

Dimming: Dimmable via 0-10V protocol standard • Optional drivers available for use with Lutron EcoSystem, 2-wire dimmers DMXR, or DALI • For a list of compatible dimmers, see LED-DIM.

Life: Rated for 60,000 hours at 70% lumen maintenance • Available with optional Lumen Depreciation Indicator (LDI)

Operation Temperature: -20° C to 50° C

A+ Capable options indicated by this color background

J7.1.92G4

indy™

800 TO 9000 LUMEN 12″ LED RETRO-FIT

HYPERBOLIC / PARABOLIC

LRT12 SERIES

Type	Cat. No.

Project: _____

Notes: _____

Emergency Battery Pack (Optional) output: Provides a minimum of 600 (BR), or 1000 (HBR) lumens for a minimum duration of 90 minutes • BRT20C option is CEC Title 20 compliant

Warranty: 5 years when used in accordance with manufacturing guidelines.

Specifications subject to change without notice.



ORDERING INFORMATION

Complete Catalog# Example Includes (Rough-In, option, reflector, accessory) Ordering Example: LRT12 08LM 27K MVOLT G4 80CRI ZT LDI HW CS PF

ROUGH-IN

Series	Lumen Package	Color Temperature	Voltage	Generation	CRI	Driver	Rough-In Options
LRT12 12″ L-Series Retrofit Downlight	**08LM** 800 Lumens **13LM** 1300 Lumens **15LM** 1500 Lumens **17LM** 1700 Lumens **23LM** 2300 Lumens **28LM** 2800 Lumens **33LM** 3300 Lumens **40LM** 4000 Lumens **45LM** 4500 Lumens **50LM** 5000 Lumens **55LM** 5500 Lumens **60LM** 6000 Lumens **65LM** 6500 Lumens **70LM** 7000 Lumens **75LM** 7500 Lumens **80LM** 8000 Lumens **85LM** 8500 Lumens **90LM** 9000 Lumens	**27K** 2700K **30K** 3000K **35K** 3500K **40K** 4000K **50K** 5000K	**120** 120 Volt **277** 277 Volt **347** 347 Volt **MVOLT**[1] Multi-Volt (120-277)	**G4** Gen 4	**80CRI** 80+ CRI **90CRI** 90+ CRI **97CRI**[2] 97+ CRI	**DALI** DALI Control Dimming **DMXR** DMX/RDM Driver **EDAB**[4,5] eldoLED SOLOdrive DALI. Logarithmic dimming to <1% **EDXB**[3,4,6] eldoLED POWERdrive DMX/RDM w/ Phoenix Connectors. Logarithmic dimming to <1% **EZ10**[4,5] eldoLED 0-10V ECOdrive. Linear dimming to 10% min. **EZ1**[4,5] eldoLED 0-10V ECOdrive. Linear dimming to 1% min. **EZB**[4,5] eldoLED 0-10V SOLOdrive. Logarithmic dimming to <1% **FD**[5,7] Forward or Reverse Phase Dimming Driver **FDL**[7,8,15] Forward Phase Dimming Lutron Driver **PD**[8,15] Lutron Ecosystem Dimming Driver **ZT**[14] 0-10V Dimming	**F**[3,9] Fuse and Fuse Holder **CP**[10] Chicago Plenum **LDI** Lumen Depreciation Indicator **BR**[3,4,12] Emergency Battery Pack w/Remote Test Switch **BRT20C**[3,4,12] Emergency Battery Pack w/ Remote Test Switch, CEC Title 20 Compliant **HBR**[3,4,12] High Lumen Emergency Battery Pack w/Remote Test Switch **NL**[9,11] nLight® Dimming Pack Controls **NLER**[9,11] nLight® dimming pack controls. nLER controls fixtures on emergency circuit **INC**[7] Medium base socket adapter for quick retro-fit of incandescent fixtures **AE1BN**[16] Atrius™ enabled, Bluetooth® beacons, network and in fixture power supply

REFLECTOR

To order reflector separately, use "LRT12" prefix before reflector option values. Ex: LRT12 HW CS PF

Trim Style	Finish	Trim Options
HM[12] Hyperbolic Medium **HN**[12] Hyperbolic Narrow **HW**[12] Hyperbolic Wide **P** Parabolic	**CD** Clear Diffuse **CS** Clear Specular **CSS** Clear Semi-Specular **WH** White	**PF**[13] White Flange **WET** Wet Location

See notes on page 2.

 ©2017 Acuity Brands Lighting, Inc.

Ordering Notes
1 Only 800, 1300, 1500 and 1700 lumen fixtures are MVOLT.
2 2700K & 3000K only.
3 Not available with 347V.
4 Not compatible with LDI.
5 Not available for 6000 lumens and up.
6 Not available for 4000 and 5500 lumens and up.
7 120V only.
8 Not available for 5000 lumens and up.
9 Specify voltage.
10 BR, BRT20C, HBR, EDXB, NL, NLER not compatible with CP.
11 Only compatible with EZ10, EZ1 & EZB (nPS 80 EZ) drivers and 60LM-90LM ZT (nPP16 D) drivers.
12 Not compatible with WET.
13 Not required when specifying WH finish.
14 Not compatible with NL between 800 and 5500 lumens.
15 Not compatible with BR, BRT20C, HBR, or LDI.
16 See AE1BN notes in following table for compatibility with other options.

AE1BN Notes
Only compatible with ZT, EZ1, EZB, EZ10 drivers.
CP, BR, BRT20C, HBR, NL, NLER not compatible with AE1BN.
Recommended ceiling height of 30' and under; not intended for use on ceilings greater than 40'.

The Bluetooth® word mark and logos are registered trademarks owned by Bluetooth SIG, Inc. and any use of such marks by Acuity Brands Lighting is under license.

PRODUCT SPECIFICATIONS (cont.)

MECHANICAL

Retro-fit Housing: Housing installs from below ceiling • Secured in place by four (4) tension clips • Tension clips accommodate ceilings from 1/2" to 1-1/8" thick • Integral heat sink conducts heat away from LED light engine • Driver is accessible from below the ceiling and can be upgraded to accommodate future technology improvements.

TRIMS:

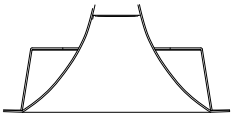

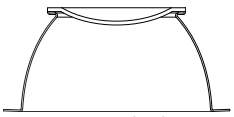

APERTURE: 10-5/8" Dia.
CEILING CUTOUT: 12-3/4" Dia.
OVERLAP: 14-1/8" Dia.

PASSIVE COOLING DIMENSIONS: 800 - 9000 Lumens

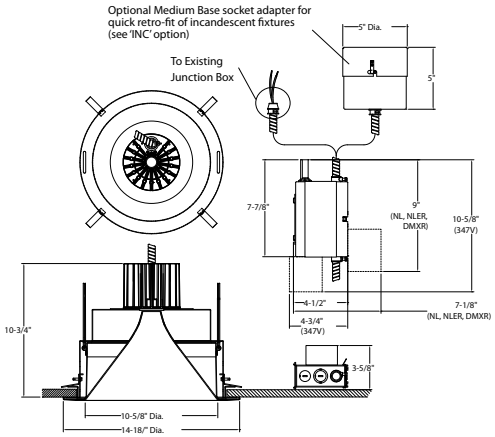

Atrius Enabled

PASSIVE COOLING DIMENSIONS: 800 - 9000 Lumens

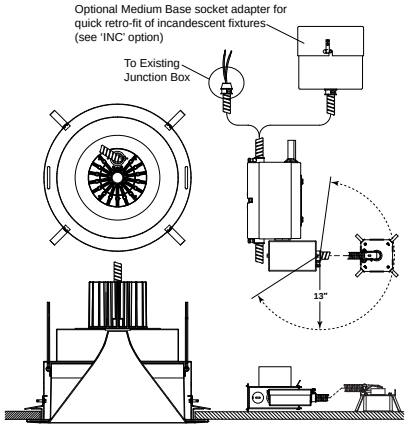

ENERGY STAR® certified

	PRODUCT#	FIXTURE CONFIGURATIONS = ENERGY STAR	
ENERGY STAR	MVOLT 120V/277V LRT12 (WW)LM (XX)K MVOLT G4 (YY)CRI (ZZ) (CC)[1]	Lumen Package: CCT: Voltage: CRI: Trim Type: Trim Color/Finish:	WW = 08[2], 13[2], 15, 17 XX = 27, 30, 35, 40, 50 MVOLT (120V-277V) YY = 80, 90, 97 ZZ = HN, HM, HW, P CC = CS, CSS, CD
ENERGY STAR	120V/277V LRT12 (WW)LM (XX)K (V) G4 (YY)CRI (ZZ) (CC)[1]	Lumen Package: CCT: Voltage: CRI: Trim Type: Trim Color/Finish:	WW = 17, 23, 28, 33, 40, 45, 50, 55, 60, 65, 70, 75, 80, 85, 90 XX = 27, 30, 35, 40, 50 V = 120, 277 YY = 80, 90, 97 ZZ = HN, HM, HW, P CC = CS, CSS, CD

1 EDAB, EDXB, PD and FDL options are not ENERGY STAR® certified.
2 Indicated lumen packages are not ENERGY STAR® certified with -DMXR or -DALI options when used with 277 volts.

LABELS AND LISTINGS

UL & cUL listed for damp locations • UL spacing requirement for 4000 lumen and above: minimum of 4' between fixture centers, 3" overhead clearance, 2' from fixture center to side wall • RoHS compliant • EMI complies with FCC 47, Part 15, Class A • ENERGY STAR® certified, see table for designated products • I.B.E.W. Union made • ARRA Compliant

ENGINEERING DATA: 347 Volt available, consult factory																		
VOLTAGE	**120**																	
LIGHT ENGINE LUMENS	**800**	**1300**	**1500**	**1700**	**2300**	**2800**	**3300**	**4000**	**4500**	**5000**	**5500**	**6000**	**6500**	**7000**	**7500**	**8000**	**8500**	**9000**
CCT	**2700K/3000K/3500K/4000K/5000K**																	
INPUT CURRENT	0.063	0.098	0.115	0.132	0.197	0.238	0.280	0.351	0.345	0.381	0.427	0.439	0.483	0.541	0.573	0.607	0.656	0.710
INPUT WATTAGE	7.53	11.74	13.66	15.82	23.52	28.46	33.62	42.14	41.41	45.54	51.08	52.51	58.11	64.59	68.84	72.83	78.87	85.03
INPUT FREQUENCY	50/60Hz	50/60Hz	50/60Hz	50/60Hz	50/60Hz	50/60Hz	50/60Hz	50/60Hz	50/60Hz	50/60Hz	50/60Hz	50/60Hz	50/60Hz	50/60Hz	50/60Hz	50/60Hz	50/60Hz	50/60Hz
THD%	6.42	5.19	4.61	3.86	5.09	5.46	4.43	4.53	6.03	6.03	6.23	6.44	6.54	7.32	7.58	7.75	8.37	8.05
POWER FACTOR	0.993	0.993	0.992	0.994	0.994	0.995	0.997	0.998	0.996	0.996	0.996	0.996	0.996	0.995	0.995	0.996	0.996	0.996
VOLTAGE	**277**																	
LIGHT ENGINE LUMENS	**800**	**1300**	**1500**	**1700**	**2300**	**2800**	**3300**	**4000**	**4500**	**5000**	**5500**	**6000**	**6500**	**7000**	**7500**	**8000**	**8500**	**9000**
CCT	**2700K/3000K/3500K/4000K/5000K**																	
INPUT CURRENT	0.031	0.048	0.056	0.063	0.093	0.108	0.131	0.158	0.161	0.175	0.195	0.202	0.221	0.251	0.265	0.268	0.290	0.310
INPUT WATTAGE	7.87	11.84	13.81	15.89	23.65	28.19	33.83	41.68	41.74	45.80	51.02	52.35	57.64	64.22	68.40	71.29	77.27	83.16
INPUT FREQUENCY	50/60Hz	50/60Hz	50/60Hz	50/60Hz	50/60Hz	50/60Hz	50/60Hz	50/60Hz	50/60Hz	50/60Hz	50/60Hz	50/60Hz	50/60Hz	50/60Hz	50/60Hz	50/60Hz	50/60Hz	50/60Hz
THD%	12.00	11.62	11.31	11.34	9.93	9.04	10.48	8.79	9.15	8.07	9.85	11.12	10.97	13.07	12.83	12.96	13.53	12.56
POWER FACTOR	0.904	0.885	0.887	0.907	0.918	0.943	0.932	0.953	0.934	0.943	0.944	0.933	0.942	0.921	0.931	0.957	0.962	0.965

HYPERBOLIC

DELIVERED LUMENS/LUMENS PER WATT (35K 80CRI)

	800 35K		1300 35K		1500 35K		1700 35K		2300 35K		2800 35K		3300 35K		4000 35K		4500 35K	
TRIM/FINISH	Lumens	LPW	Lumens	LPW	Lumens	LPW	Lumens	LPW	Lumens	LPW	Lumens	LPW	Lumens	LPW	Lumens	LPW	Lumens	LPW
LRT12 HN CS	774	102.8	1290	109.9	1491	109.2	1698	107.3	2285	97.2	2755	96.8	3207	95.4	3899	92.5	4207	101.6
LRT12 HN CSS	714	94.8	1191	101.4	1376	100.7	1566	99.0	2109	89.7	2542	89.3	2959	88.0	3598	85.4	3828	92.4
LRT12 HN CD	623	82.8	1040	88.5	1201	87.9	1368	86.4	1841	78.3	2220	78.0	2583	76.8	3141	74.5	3283	79.3
LRT12 HM CS	748	99.3	1247	106.2	1441	105.5	1640	103.7	2208	93.9	2663	93.6	3099	92.2	3768	89.4	3990	96.4
LRT12 HM CSS	706	93.7	1177	100.2	1360	99.5	1548	97.8	2084	88.6	2512	88.3	2924	87.0	3555	84.4	3719	89.8
LRT12 HM CD	625	83.1	1043	88.9	1205	88.2	1372	86.7	1847	78.5	2227	78.3	2592	77.1	3152	74.8	3420	82.6
LRT12 HW CS	726	96.3	1210	103.1	1398	102.4	1592	100.6	2143	91.1	2584	90.8	3007	89.4	3656	86.8	3990	96.4
LRT12 HW CSS	683	90.7	1139	97.0	1317	96.4	1499	94.7	2018	85.8	2433	85.5	2831	84.2	3442	81.7	3686	89.0
LRT12 HW CD	601	79.8	1002	85.3	1157	84.7	1318	83.3	1774	75.4	2139	75.1	2489	74.0	3026	71.8	3209	77.5
	5000 35K		**5500 35K**		**6000 35K**		**6500 35K**		**7000 35K**		**7500 35K**		**8000 35K**		**8500 35K**		**9000 35K**	
TRIM/FINISH	Lumens	LPW	Lumens	LPW	Lumens	LPW	Lumens	LPW	Lumens	LPW	Lumens	LPW	Lumens	LPW	Lumens	LPW	Lumens	LPW
LRT12 HN CS	4605	101.1	5099	99.8	5295	100.8	5797	99.8	6346	98.2	6644	96.5	7048	96.8	7781	98.7	8192	96.3
LRT12 HN CSS	4189	92.0	4639	90.8	4817	91.7	5274	90.8	5773	89.4	6044	87.8	6412	88.0	7079	89.8	7453	87.6
LRT12 HN CD	3593	78.9	3978	77.9	4132	78.7	4523	77.8	4951	76.7	5184	75.3	5499	75.5	6071	77.0	6392	75.2
LRT12 HM CS	4367	95.9	4836	94.7	5022	95.6	5498	94.6	6018	93.2	6301	91.5	6684	91.8	7379	93.6	7769	91.4
LRT12 HM CSS	4070	89.4	4507	88.2	4680	89.1	5124	88.2	5609	86.8	5872	85.3	6230	85.5	6878	87.2	7241	85.2
LRT12 HM CD	3742	82.2	4144	81.1	4304	82.0	4712	81.1	5157	79.8	5400	78.4	5728	78.7	6324	80.2	6658	78.3
LRT12 HW CS	4367	95.9	4836	94.7	5022	95.6	5498	94.6	6018	93.2	6301	91.5	6684	91.8	7379	93.6	7769	91.4
LRT12 HW CSS	4034	88.6	4467	87.5	4639	88.4	5079	87.4	5560	86.1	5821	84.6	6175	84.8	6818	86.4	7177	84.4
LRT12 HW CD	3512	77.1	3889	76.1	4039	76.9	4422	76.1	4840	74.9	5068	73.6	5376	73.8	5935	75.3	6248	73.5

PARABOLIC

DELIVERED LUMENS/LUMENS PER WATT (35K 80CRI)

	800 35K		1300 35K		1500 35K		1700 35K		2300 35K		2800 35K		3300 35K		4000 35K		4500 35K	
TRIM/FINISH	Lumens	LPW	Lumens	LPW	Lumens	LPW	Lumens	LPW	Lumens	LPW	Lumens	LPW	Lumens	LPW	Lumens	LPW	Lumens	LPW
LRT12 P CS	647	86.0	1080	92.0	1248	91.4	1421	89.8	1912	81.3	2306	81.0	2684	79.8	3263	77.4	3608	87.1
LRT12 P CSS	638	84.7	1064	90.6	1230	90.0	1400	88.5	1884	80.1	2272	79.8	2644	78.7	3215	76.3	3587	86.6
LRT12 P CD	571	75.8	952	81.1	1100	80.5	1252	79.2	1686	71.7	2032	71.4	2365	70.4	2876	68.2	3203	77.3
	5000 35K		**5500 35K**		**6000 35K**		**6500 35K**		**7000 35K**		**7500 35K**		**8000 35K**		**8500 35K**		**9000 35K**	
TRIM/FINISH	Lumens	LPW	Lumens	LPW	Lumens	LPW	Lumens	LPW	Lumens	LPW	Lumens	LPW	Lumens	LPW	Lumens	LPW	Lumens	LPW
LRT12 P CS	3949	86.7	4373	85.6	4541	86.5	4972	85.6	5442	84.3	5698	82.8	6045	83.0	6673	84.6	7026	82.6
LRT12 P CSS	3926	86.2	4347	85.1	4514	86.0	4943	85.1	5410	83.8	5664	82.3	6009	82.5	6634	84.1	6984	82.1
LRT12 P CD	3505	77.0	3881	76.0	4031	76.8	4413	75.9	4831	74.8	5057	73.5	5365	73.7	5923	75.1	6236	73.3

BEAM SPREAD

TRIM	800-4000 LUMEN	4500-9000 LUMEN
LRT12 HN CS	15°	26°
LRT12 HN CSS	20°	26°
LRT12 HN CD	31°	44°
LRT12 HM CS	62°	64°
LRT12 HM CSS	62°	64°
LRT12 HM CD	62°	64°
LRT12 HW CS	66°	69°
LRT12 HW CSS	66°	69°
LRT12 HW CD	66°	69°
LRT12 P CS	59°	60°
LRT12 P CSS	59°	60°
LRT12 P CD	59°	60°

CCT MULTIPLIERS

CCT	08LM-40LM	45LM-90LM
2700K	0.9	0.92
3000K	0.96	0.97
3500K	1	1
4000K	1.02	1.01
5000K	1.04	1.05

CRI MULTIPLIERS

CRI	08LM-40LM	45LM-90LM
80CRI	1	1
90CRI	0.83	0.85
97CRI	0.80	0.77

 ©2017 Acuity Brands Lighting, Inc.

PHOTOMETRICS

Distribution Curve | **Distribution Data** | **Output Data** | **Coefficient of Utilization** | **Illuminance Data at 30" Above Floor for a Single Luminaire**

LRT12 90LM 35K + LRT12 HN CS, 3500K LEDs, input watts: 85.03, delivered lumens: 7849.4, LM/W = 92.3, Spacing Criteria: 0.4, test no. PR08170393, tested in accordance to IESNA LM-79.

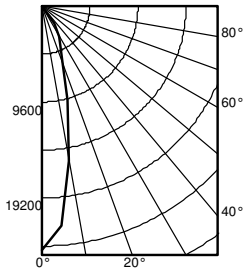

	Ave	Lumens
0	24450	
5	22016	1853
15	9778	2769
25	4354	2071
35	2057	1144
45	11	10
55	0	0
65	2	1
75	0	1
85	0	1
90	0	

Zone	Lumens	% Lamp
0° - 30°	6692.7	85.3
0° - 40°	7836.7	99.8
0° - 60°	7847.1	100.0
0° - 90°	7849.4	100.0
90° - 180°	0.0	0.0
0° - 180°	7849.4	*100.0
*Efficiency		

pf	20%								
pc	80%			70%			50%		
pw	50%	30%	10%	50%	30%	10%	50%	30%	10%
0	119	119	119	116	116	116	111	111	111
1	112	110	108	110	108	106	106	104	103
2	106	102	100	104	101	98	101	98	96
3	100	96	93	99	95	92	96	93	91
4	95	91	87	94	90	87	92	88	86
5	91	86	82	90	85	82	88	84	81
6	86	82	78	86	81	78	84	80	77
7	83	78	74	82	77	74	81	77	74
8	79	74	71	79	74	71	78	73	70
9	76	71	68	76	71	68	75	70	68
10	73	68	65	73	68	65	72	68	65

		50% beam - 24.5°		10% beam - 57.9°	
Mounting Height	Inital FC Center Beam	Diameter	FC	Diameter	FC
8.0	808.3	2.4	404.0	6.1	80.8
10.0	434.7	3.3	217.3	8.3	43.5
12.0	270.9	4.1	135.4	10.5	27.1
14.0	184.9	5.0	92.4	12.7	18.5
16.0	134.2	5.9	67.1	14.9	13.4

LRT12 90LM 35K + LRT12 HM CS, 3500K LEDs, input watts: 85.03, delivered lumens: 7676.9, LM/W = 90.3, Spacing Criteria: 0.9, test no. PR08170394, tested in accordance to IESNA LM-79.

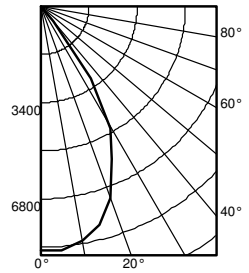

	Ave	Lumens
0	8632	
5	8634	814
15	7962	2214
25	5933	2743
35	3087	1786
45	0	117
55	0	0
65	2	1
75	0	0
85	0	0
90	2	

Zone	Lumens	% Lamp
0° - 30°	5771.4	75.2
0° - 40°	7557.7	98.4
0° - 60°	7675.0	100.0
0° - 90°	7676.9	100.0
90° - 180°	0.0	0.0
0° - 180°	7676.9	*100.0
*Efficiency		

pf	20%								
pc	80%			70%			50%		
pw	50%	30%	10%	50%	30%	10%	50%	30%	10%
0	119	119	119	116	116	116	111	111	111
1	111	109	107	109	107	105	105	103	102
2	104	100	97	102	99	96	99	96	93
3	97	92	89	96	91	88	93	89	86
4	91	86	82	90	85	81	88	84	80
5	85	80	76	85	79	75	83	78	75
6	80	75	71	80	74	70	78	73	70
7	76	70	66	75	70	66	74	69	65
8	72	66	62	71	65	62	70	65	61
9	68	62	58	67	62	58	66	61	58
10	64	58	55	64	58	55	63	58	54

		50% beam - 50.8°		10% beam - 75.5°	
Mounting Height	Inital FC Center Beam	Diameter	FC	Diameter	FC
8.0	285.4	5.2	142.7	8.5	28.5
10.0	153.5	7.1	76.7	11.6	15.3
12.0	95.6	9.0	47.8	14.7	9.6
14.0	65.3	10.9	32.6	17.8	6.5
16.0	47.4	12.8	23.7	20.9	4.7

LRT12 90LM 35K + LRT12 HW CS, 3500K LEDs, input watts: 85.03, delivered lumens: 7821.6, LM/W = 92.0, Spacing Criteria: 1.1, test no. PR08170395, tested in accordance to IESNA LM-79.

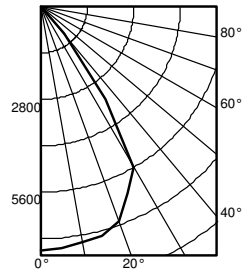

	Ave	Lumens
0	7373	
5	7325	695
15	7144	2008
25	6211	2864
35	3414	2054
45	3	194
55	3	3
65	0	1
75	0	0
85	5	3
90	0	

Zone	Lumens	% Lamp
0° - 30°	5566.7	71.2
0° - 40°	7620.4	97.4
0° - 60°	7817.5	99.9
0° - 90°	7821.6	100.0
90° - 180°	0.0	0.0
0° - 180°	7821.6	*100.0
*Efficiency		

pf	20%								
pc	80%			70%			50%		
pw	50%	30%	10%	50%	30%	10%	50%	30%	10%
0	119	119	119	116	116	116	111	111	111
1	111	108	106	109	106	104	105	103	101
2	103	99	96	102	98	95	98	95	93
3	96	91	87	95	90	87	92	88	85
4	90	84	80	89	84	80	87	82	79
5	84	78	74	83	78	74	81	77	73
6	79	73	69	78	72	68	77	72	68
7	74	68	64	73	68	64	72	67	63
8	70	64	60	69	63	59	68	63	59
9	66	60	56	65	59	56	64	59	55
10	62	56	52	61	56	52	61	55	52

		50% beam - 59.5°		10% beam - 77.9°	
Mounting Height	Inital FC Center Beam	Diameter	FC	Diameter	FC
8.0	243.7	6.3	121.9	8.9	24.4
10.0	131.1	8.6	65.5	12.1	13.1
12.0	81.7	10.9	40.8	15.4	8.2
14.0	55.8	13.2	27.9	18.6	5.6
16.0	40.5	15.4	20.2	21.8	4.0

 ©2017 Acuity Brands Lighting, Inc.

PHOTOMETRICS

Distribution Curve | **Distribution Data** | **Output Data** | **Coefficient of Utilization** | **Illuminance Data at 30" Above Floor for a Single Luminaire**

LRT12 45LM 35K + LRT12 HN CS, 3500K LEDs, input watts: 41.41, delivered lumens: 4030.1, LM/W = 97.3, Spacing Criteria: 0.4, test no. PR08170383, tested in accordance to IESNA LM-79.

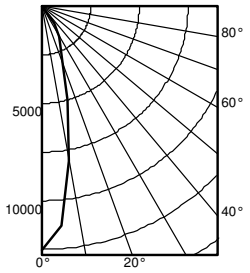

	Ave	Lumens
0	12559	
5	11309	952
15	5022	1422
25	2236	1064
35	1056	587
45	6	5
55	0	0
65	0	0
75	0	0
85	0	0
90	0	

Zone	Lumens	% Lamp
0° - 30°	3437.7	85.3
0° - 40°	4025.1	99.9
0° - 60°	4030.1	100.0
0° - 90°	4030.1	100.0
90° - 180°	0.0	0.0
0° - 180°	4030.1	*100.0
*Efficiency		

pf	20%								
pc	80%			70%			50%		
pw	50%	30%	10%	50%	30%	10%	50%	30%	10%
0	119	119	119	116	116	116	111	111	111
1	112	110	108	110	108	106	106	104	103
2	106	102	100	104	101	98	101	98	96
3	100	96	93	99	95	92	96	93	91
4	95	91	87	94	90	87	92	88	86
5	91	86	82	90	85	82	88	84	81
6	87	82	78	86	81	78	84	80	77
7	83	78	74	82	77	74	81	77	74
8	79	74	71	79	74	71	78	73	70
9	76	71	68	76	71	68	75	70	68
10	73	68	65	73	68	65	72	68	65

Mounting Height	Inital FC Center Beam	50% beam - 24.5° Diameter	50% beam - 24.5° FC	10% beam - 57.9° Diameter	10% beam - 57.9° FC
8.0	415.2	2.4	207.5	6.1	41.5
10.0	223.3	3.3	111.6	8.3	22.3
12.0	139.2	4.1	69.6	10.5	13.9
14.0	95.0	5.0	47.5	12.7	9.5
16.0	68.9	5.9	34.4	14.9	6.9

LRT12 45LM 35K + LRT12 HM CS, 3500K LEDs, input watts: 41.41, delivered lumens: 3942.5, LM/W = 95.2, Spacing Criteria: 0.9, test no. PR08170384, tested in accordance to IESNA LM-79.

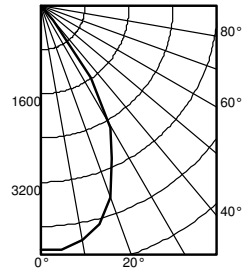

	Ave	Lumens
0	4434	
5	4435	418
15	4090	1137
25	3048	1409
35	1586	918
45	0	60
55	0	0
65	0	0
75	0	0
85	0	0
90	0	

Zone	Lumens	% Lamp
0° - 30°	2964.7	75.2
0° - 40°	3882.3	98.5
0° - 60°	3942.5	100.0
0° - 90°	3942.5	100.0
90° - 180°	0.0	0.0
0° - 180°	3942.5	*100.0
*Efficiency		

pf	20%								
pc	80%			70%			50%		
pw	50%	30%	10%	50%	30%	10%	50%	30%	10%
0	119	119	119	116	116	116	111	111	111
1	111	109	107	109	107	105	105	103	102
2	104	100	97	102	99	96	99	96	94
3	97	92	89	96	91	88	93	89	86
4	91	86	82	90	85	81	88	84	80
5	86	80	76	85	79	75	83	78	75
6	80	75	71	80	74	70	78	73	70
7	76	70	66	75	70	66	74	69	65
8	72	66	62	71	65	62	70	65	61
9	68	62	58	67	62	58	66	61	58
10	64	58	55	64	58	55	63	58	54

Mounting Height	Inital FC Center Beam	50% beam - 50.8° Diameter	50% beam - 50.8° FC	10% beam - 75.5° Diameter	10% beam - 75.5° FC
8.0	146.6	5.2	73.3	8.5	14.7
10.0	78.8	7.1	39.4	11.6	7.9
12.0	49.1	9.0	24.6	14.7	4.9
14.0	33.5	10.9	16.8	17.8	3.4
16.0	24.3	12.8	12.2	20.9	2.4

LRT12 45LM 35K + LRT12 HW CS, 3500K LEDs, input watts: 41.41, delivered lumens: 4022.0, LM/W = 97.1, Spacing Criteria: 1.1, test no. PR08170385, tested in accordance to IESNA LM-79.

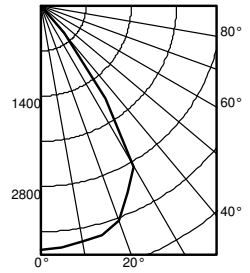

	Ave	Lumens
0	3792	
5	3768	357
15	3675	1033
25	3195	1474
35	1756	1056
45	0	99
55	0	0
65	0	0
75	0	0
85	3	2
90	0	

Zone	Lumens	% Lamp
0° - 30°	2863.5	71.2
0° - 40°	3920.0	97.5
0° - 60°	4019.7	99.9
0° - 90°	4022.0	100.0
90° - 180°	0.0	0.0
0° - 180°	4022.0	*100.0
*Efficiency		

pf	20%								
pc	80%			70%			50%		
pw	50%	30%	10%	50%	30%	10%	50%	30%	10%
0	119	119	119	116	116	116	111	111	111
1	111	108	106	109	106	104	105	103	101
2	103	99	96	102	98	95	98	95	93
3	96	91	87	95	90	87	92	88	85
4	90	84	80	89	84	80	87	82	79
5	84	78	74	83	78	74	81	77	73
6	79	73	69	78	72	68	77	72	68
7	74	68	64	73	68	64	72	67	63
8	70	64	60	69	63	59	68	63	59
9	66	60	56	65	59	56	64	59	55
10	62	56	52	61	56	52	61	55	52

Mounting Height	Inital FC Center Beam	50% beam - 59.5° Diameter	50% beam - 59.5° FC	10% beam - 77.9° Diameter	10% beam - 77.9° FC
8.0	125.4	6.3	62.7	8.9	12.5
10.0	67.4	8.6	33.7	12.1	6.7
12.0	42.0	10.9	21.0	15.4	4.2
14.0	28.7	13.2	14.3	18.6	2.9
16.0	20.8	15.4	10.4	21.8	2.1

 ©2017 Acuity Brands Lighting, Inc.

PHOTOMETRICS

Distribution Curve | **Distribution Data** | **Output Data** | **Coefficient of Utilization** | **Illuminance Data at 30" Above Floor for a Single Luminaire**

LRT12 13LM 35K + LRT12 HN CS, 3500K LEDs, input watts: 14.70, delivered lumens: 1181.5, LM/W = 80.4, Spacing Criteria: 0.3, test no. PR08170386, tested in accordance to IESNA LM-79.

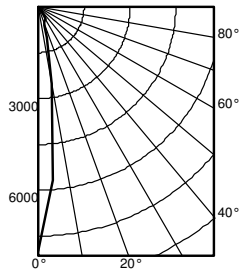

	Ave	Lumens
0	7999	
5	5685	422
15	1040	340
25	513	243
35	342	175
45	0	1
55	0	0
65	0	0
75	0	0
85	0	0
90	0	

Zone	Lumens	% Lamp
0° - 30°	1005.5	85.1
0° - 40°	1180.6	99.9
0° - 60°	1181.5	100.0
0° - 90°	1181.5	100.0
90° - 180°	0.0	0.0
0° - 180°	1181.5	*100.0
*Efficiency		

pf	80%			70%			50%		
pc	20%			20%			20%		
pw	50%	30%	10%	50%	30%	10%	50%	30%	10%
0	119	119	119	116	116	116	111	111	111
1	112	110	109	110	109	107	106	105	104
2	107	104	101	105	102	100	102	100	98
3	102	98	95	100	97	94	98	95	92
4	97	93	90	96	92	89	94	91	88
5	93	88	85	92	88	85	90	87	84
6	89	85	81	89	84	81	87	83	81
7	86	81	78	85	81	78	84	80	78
8	83	78	75	82	78	75	81	77	75
9	80	76	73	80	75	72	79	75	72
10	77	73	70	77	73	70	76	73	70

Mounting Height	Inital FC Center Beam	50% beam - 15.0° Diameter	50% beam - 15.0° FC	10% beam - 33.2° Diameter	10% beam - 33.2° FC
8.0	264.4	1.5	132.2	3.3	26.4
10.0	142.2	2.0	71.1	4.5	14.2
12.0	88.6	2.5	44.3	5.7	8.9
14.0	60.5	3.0	30.2	6.9	6.0
16.0	43.9	3.6	21.9	8.0	4.4

LRT12 13LM 35K + LRT12 HM CS, 3500K LEDs, input watts: 14.70, delivered lumens: 1281.0, LM/W = 87.1, Spacing Criteria: 0.8, test no. PR08170387, tested in accordance to IESNA LM-79.

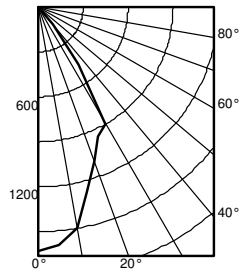

	Ave	Lumens
0	1632	
5	1594	148
15	1273	357
25	952	448
35	466	301
45	0	27
55	0	0
65	0	0
75	0	0
85	0	0
90	0	

Zone	Lumens	% Lamp
0° - 30°	953.4	74.4
0° - 40°	1253.9	97.9
0° - 60°	1281.0	100.0
0° - 90°	1281.0	100.0
90° - 180°	0.0	0.0
0° - 180°	1281.0	*100.0
*Efficiency		

pf	80%			70%			50%		
pc	20%			20%			20%		
pw	50%	30%	10%	50%	30%	10%	50%	30%	10%
0	119	119	119	116	116	116	111	111	111
1	111	109	107	109	107	105	105	103	102
2	104	100	97	102	99	96	99	96	93
3	97	92	89	96	91	88	93	89	86
4	91	86	82	90	85	81	88	84	80
5	85	80	76	85	79	75	83	78	75
6	80	75	71	80	74	70	78	73	70
7	76	70	66	75	70	66	74	69	65
8	72	66	62	71	65	62	70	65	61
9	68	62	58	67	62	58	66	61	58
10	64	58	55	64	58	55	63	58	54

Mounting Height	Inital FC Center Beam	50% beam - 44.5° Diameter	50% beam - 44.5° FC	10% beam - 74.5° Diameter	10% beam - 74.5° FC
8.0	54.0	4.5	27.0	8.4	5.4
10.0	29.0	6.1	14.5	11.4	2.9
12.0	18.1	7.8	9.0	14.5	1.8
14.0	12.3	9.4	6.2	17.5	1.2
16.0	9.0	11.1	4.5	20.5	0.9

LRT12 13LM 35K + LRT12 HW CS, 3500K LEDs, input watts: 14.70, delivered lumens: 1253.2, LM/W = 85.3, Spacing Criteria: 1.1, test no. PR08170388, tested in accordance to IESNA LM-79.

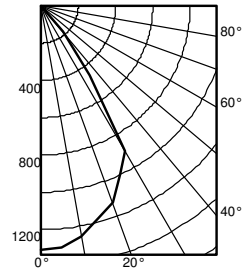

	Ave	Lumens
0	1312	
5	1304	122
15	1181	333
25	1000	462
35	459	303
45	0	32
55	0	0
65	0	0
75	0	0
85	0	0
90	0	

Zone	Lumens	% Lamp
0° - 30°	917.6	73.2
0° - 40°	1220.9	97.4
0° - 60°	1253.2	100.0
0° - 90°	1253.2	100.0
90° - 180°	0.0	0.0
0° - 180°	1253.2	*100.0
*Efficiency		

pf	80%			70%			50%		
pc	20%			20%			20%		
pw	50%	30%	10%	50%	30%	10%	50%	30%	10%
0	119	119	119	116	116	116	111	111	111
1	111	109	106	109	107	105	105	103	101
2	103	100	96	102	98	95	99	96	93
3	97	92	88	95	91	87	93	89	86
4	90	85	81	89	84	80	87	83	79
5	85	79	75	84	78	74	82	77	74
6	80	74	69	79	73	69	77	72	69
7	75	69	65	74	69	65	73	68	64
8	70	65	60	70	64	60	69	64	60
9	66	61	57	66	60	57	65	60	56
10	63	57	53	62	57	53	62	56	53

Mounting Height	Inital FC Center Beam	50% beam - 55.5° Diameter	50% beam - 55.5° FC	10% beam - 76.7° Diameter	10% beam - 76.7° FC
8.0	43.4	5.8	21.7	8.7	4.3
10.0	23.3	7.9	11.7	11.9	2.3
12.0	14.5	10.0	7.3	15.0	1.5
14.0	9.9	12.1	5.0	18.2	1.0
16.0	7.2	14.2	3.6	21.4	0.7

 ©2017 Acuity Brands Lighting, Inc.

PHOTOMETRICS

Distribution Curve | **Distribution Data** | **Output Data** | **Coefficient of Utilization** | **Illuminance Data at 30" Above Floor for a Single Luminaire**

LRT12 90LM 35K + LRT12 P CS, 3500K LEDs, input watts: 85.03, delivered lumens: 6936.0, LM/W = 81.6, Spacing Criteria: 1.0, test no. PR08170399, tested in accordance to IESNA LM-79.

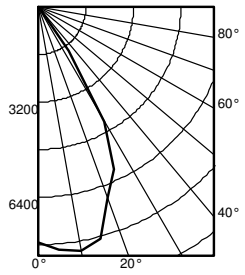

	Ave	Lumens
0	7936	
5	8214	789
15	8071	2193
25	6012	2657
35	1821	1237
45	20	45
55	10	9
65	0	3
75	0	1
85	3	2
90	2	

Zone	Lumens	% Lamp
0° - 30°	5638.8	81.3
0° - 40°	6876.2	99.1
0° - 60°	6930.3	99.9
0° - 90°	6936.0	100.0
90° - 180°	0.0	0.0
0° - 180°	6936.0	*100.0
*Efficiency		

pf	80%			70%			50%		
pc	20%			20%			20%		
pw	50%	30%	10%	50%	30%	10%	50%	30%	10%
0	119	119	119	116	116	116	111	111	111
1	111	109	107	109	107	105	105	103	102
2	104	100	97	103	99	96	99	97	94
3	98	93	90	96	92	89	94	90	87
4	92	87	83	91	86	82	89	85	81
5	87	81	77	86	81	77	84	80	76
6	82	76	72	81	76	72	80	75	72
7	77	72	68	77	71	68	75	71	67
8	73	68	64	73	67	64	72	67	63
9	69	64	60	69	64	60	68	63	60
10	66	60	57	66	60	57	65	60	57

		50% beam - 53.0°		10% beam - 72.0°	
Mounting Height	Inital FC Center Beam	Diameter	FC	Diameter	FC
8.0	262.3	5.5	131.2	8.0	26.2
10.0	141.1	7.5	70.5	10.9	14.1
12.0	87.9	9.5	44.0	13.8	8.8
14.0	60.0	11.5	30.0	16.7	6.0
16.0	43.5	13.5	21.8	19.6	4.4

LRT12 13LM 35K + LRT12 P CS, 3500K LEDs, input watts: 14.70, delivered lumens: 1060.4, LM/W = 72.1, Spacing Criteria: 1.0, test no. PR08170341, tested in accordance to IESNA LM-79.

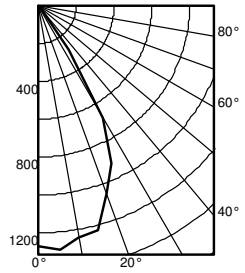

	Ave	Lumens
0	1267	
5	1297	121
15	1231	334
25	919	408
35	283	190
45	4	6
55	0	0
65	0	0
75	0	0
85	0	0
90	0	

Zone	Lumens	% Lamp
0° - 30°	863.9	81.5
0° - 40°	1054.2	99.4
0° - 60°	1060.4	100.0
0° - 90°	1060.4	100.0
90° - 180°	0.0	0.0
0° - 180°	1060.4	*100.0
*Efficiency		

pf	80%			70%			50%		
pc	20%			20%			20%		
pw	50%	30%	10%	50%	30%	10%	50%	30%	10%
0	119	119	119	116	116	116	111	111	111
1	111	109	107	109	107	105	105	103	102
2	104	101	97	103	99	96	99	97	94
3	98	93	90	97	92	89	94	90	87
4	92	87	83	91	86	83	89	85	82
5	87	81	77	86	81	77	84	80	76
6	82	76	72	81	76	72	80	75	72
7	77	72	68	77	71	68	76	71	67
8	73	68	64	73	67	64	72	67	63
9	70	64	60	69	64	60	68	63	60
10	66	61	57	66	60	57	65	60	57

		50% beam - 52.0°		10% beam - 71.7°	
Mounting Height	Inital FC Center Beam	Diameter	FC	Diameter	FC
8.0	41.9	5.4	20.9	7.9	4.2
10.0	22.5	7.3	11.3	10.8	2.3
12.0	14.0	9.3	7.0	13.7	1.4
14.0	9.6	11.2	4.8	16.6	1.0
16.0	7.0	13.2	3.5	19.5	0.7

LRT12 45LM 35K + LRT12 P CS, 3500K LEDs, input watts: 41.41, delivered lumens: 3561.1, LM/W = 86.0, Spacing Criteria: 1.0, test no. PR08170389, tested in accordance to IESNA LM-79.

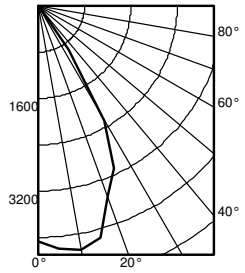

	Ave	Lumens
0	4077	
5	4220	405
15	4146	1127
25	3088	1365
35	935	636
45	10	23
55	5	5
65	0	1
75	0	0
85	0	0
90	0	

Zone	Lumens	% Lamp
0° - 30°	2896.8	81.3
0° - 40°	3532.4	99.2
0° - 60°	3560.1	100.0
0° - 90°	3561.1	100.0
90° - 180°	0.0	0.0
0° - 180°	3561.1	*100.0
*Efficiency		

pf	80%			70%			50%		
pc	20%			20%			20%		
pw	50%	30%	10%	50%	30%	10%	50%	30%	10%
0	119	119	119	116	116	116	111	111	111
1	111	109	107	109	107	105	105	103	102
2	104	101	97	103	99	96	99	97	94
3	98	93	90	96	92	89	94	90	87
4	92	87	83	91	86	82	89	85	82
5	87	81	77	86	81	77	84	80	76
6	82	76	72	81	76	72	80	75	72
7	77	72	68	77	71	68	75	71	67
8	73	68	64	73	67	64	72	67	63
9	69	64	60	69	64	60	68	63	60
10	66	60	57	66	60	57	65	60	57

		50% beam - 53.0°		10% beam - 72.0°	
Mounting Height	Inital FC Center Beam	Diameter	FC	Diameter	FC
8.0	134.8	5.5	67.4	8.0	13.5
10.0	72.5	7.5	36.2	10.9	7.2
12.0	45.2	9.5	22.6	13.8	4.5
14.0	30.8	11.5	15.4	16.7	3.1
16.0	22.4	13.5	11.2	19.6	2.2

 ©2017 Acuity Brands Lighting, Inc.

CONTROLS

EXAMPLE
Group Fixture Control*
*Appiication diagram applies for fixtures with eldoLED drivers only.

nPS 80 EZ Dimming/Control Pack (qty: 2 required)
nPODM 2P DX Dual On/Off/Dim Push-Button WallPod
nCM ADCX Daylight Sensor with Automatic Dimming Control
nCM PDT 9 Dual Technology Occupancy Sensor

Description: This design provides a dual on/off/dim wall station that enables manual control of the fixtures in Row A and Row B separately. Additionally, a daylight harvesting sensor is provided so the lights in Row B can be configured to dim automatically when daylight is available. An occupancy sensor turns off all lights when the space is vacant.

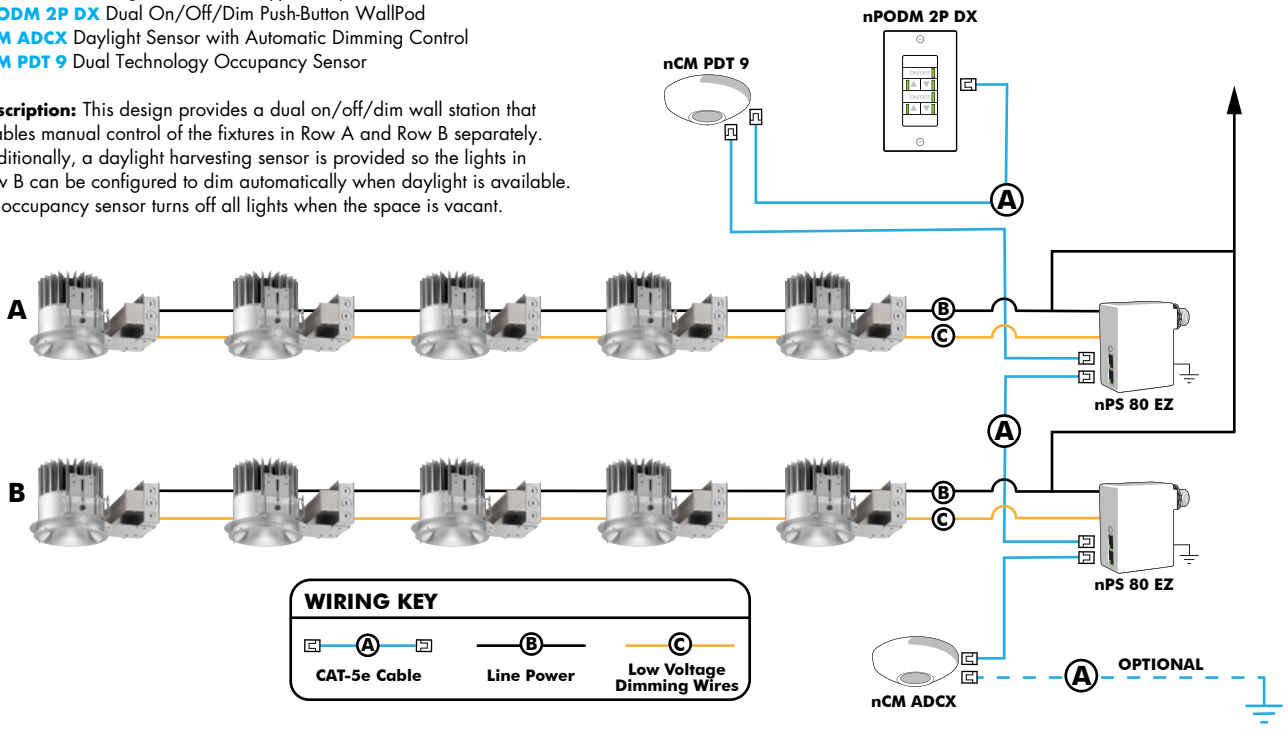

Choose Wall Controls
nLight offers multiple styles of wall controls - each with varying features and user experience.



Push-Button Wallpod
Traditional tactile buttons and LED user feedback



Graphic Wallpod
Full color touch screen provides a sophisticated look and feel

nLight® Controls Accessories:			
Order as separate catalog number. Visit www.sencorswitch.com/nLight for complete listing of nLight controls.			
WallPod Stations	**Model number**	**Occupancy sensors**	**Model Number**
On/Off	nPODM (Color)	Small motion 360º, ceiling (PIR/dual Tech)	nCM 9 / nCM PDT 9
On/Off & Raise/Lower	nPOD DX (Color)	Large motion 360º, ceiling (PIR/dual tech)	nCM 10 / nCM PDT 10
Graphic Touchscreen	nPOD GFX (Color)	Wide View (PIR/dual tech)	nWV 16 / nWV PDT 16
Photocell controls	**Model Number**	Wall Switch w/ Raise/Lower (PIR/dual tech)	nWSX LV DX / nWSX PDT LV DX
Dimming	nCM ADCX	**Cat-5 cables (plenum rated)**	**Model Number**
		10', CAT5 10FT	CAT5 10FT J1
		15, CAT5 15FT	CAT5 15FT J1

Capable Luminaire

This item is an A+ capable luminaire, which has been designed and tested to provide consistent color appearance and out-of-the-box control compatibility with simple commissioning.

- All configurations of this luminaire meet the Acuity Brand's specification for chromatic consistency.
- This luminaire is part of an A+ Certified solution for nLight control networks when ordered with drivers marked by a Shaded background*
- This Luminaire is part of an A+ Certified solution for nLight control networks, providing advanced control functionality at the luminaire level, when selection includes driver and control options marked by a shaded background*

To learn more about A+, visit www.acuitybrands.com/aplus.

*See ordering tree for details

 ©2017 Acuity Brands Lighting, Inc.

KTLD-2LEDT8-UV-IS-VDIM

LED T8 DIMMING DRIVER

DESCRIPTION

1 or 2 x LED T8 | 120-277 Multi-Voltage | High Power Factor | 0-10V Dimming

STARTING METHOD: Instant Start
LAMP CONNECTION: Series
INPUT VOLTAGE: 120-277Vac ±10%
INPUT FREQUENCY: 50/60 Hz
POWER FACTOR: High
WARRANTY: 5 Years



PRODUCT FEATURES

- Dimmable LED Driver for UL Type A LED Tubes
- Compatible with Most 10W-18W UL Type A LED Tubes
- Sound Rated: A
- Maximum Case Temperature: 167ºF, 75ºC
- Meets FCC Part 15 (Class A) Non-Consumer Limits
- Operating Ambient Temperature -20ºC/-4ºF to 50ºC/122ºF
- UL 8750 Recognized Component
- Dimming Type: 0-10V
- Type HL
- Efficiency: 80%
- **Not Compatible with Fluorescent Lamps**

ELECTRICAL SPECIFICATIONS

Lamp Type	No. of Lamps	Input Voltage	Maximum Dimmer Position				Minimum Dimmer Position				Minimum Dimming Level
			System Level Electrical Data (Driver + Lamp + Dimmer)				System Level Electrical Data (Driver + Lamp + Dimmer)				
			Input Current	Input Power	Power Factor	THD	Input Current	Input Power	Power Factor	THD	
KT-LED11.5T8-48GC-8xx-S	2	120V	0.151A	11.65W	0.992	6.20%	0.032A	2.42W	0.946	19.70%	21.80%
		277V	0.151A	11.62W	0.947	15.47%	0.033A	2.45W	0.666	24.20%	22.10%
	1	120V	0.158A	12.15W	0.982	9.20%	0.031A	2.33W	0.92	19.30%	20.20%
		277V	0.158A	12.14W	0.885	21.30%	0.032A	2.38W	0.561	28.60%	20.60%
KT-LED14T8-48GC-8xx-S	2	120V	0.263A	31.47W	0.994	7.7%	0.061A	6.96W	0.943	24.6%	20.0%
		277V	0.117A	31.06W	0.957	13.8%	0.040A	7.49W	0.671	23.4%	20.5%
	1	120V	0.128A	15.27W	0.982	9.8%	0.040A	4.39W	0.905	20.9%	19.1%
		277V	0.064A	15.68W	0.885	22.6%	0.031A	4.70W	0.512	28.5%	19.7%
KT-LED15T8-48GC-8xx-S	2	120V	0.142A	14.95W	0.995	6%	0.027A	2.73W	0.964	13.10%	19.20%
		277V	0.143A	14.96W	0.965	13.20%	0.027A	2.77W	0.747	26%	19.50%
	1	120V	0.156A	16.41W	0.986	8.70%	0.031A	3.13W	0.926	16.20%	20.20%
		277V	0.156A	16.38W	0.918	20.50%	0.032A	3.18W	0.587	25.20%	20.50%
KT-LED17T8-48GC-8xx-S	2	120V	0.318A	38.09W	0.995	4.3%	0.066A	7.68W	0.957	19.1%	17.0%
		277V	0.139A	37.29W	0.967	12.2%	0.041A	8.24W	0.721	23.5%	17.4%
	1	120V	0.179A	21.65W	0.988	17.8%	0.045A	4.97W	0.918	17.1%	17.9%
		277V	0.840A	21.57W	0.926	19.7%	0.035A	5.32W	0.557	30.3%	18.2%

KTLD-2LEDT8-UV-IS-VDIM
LED T8 DIMMING DRIVER

PHYSICAL SPECIFICATIONS

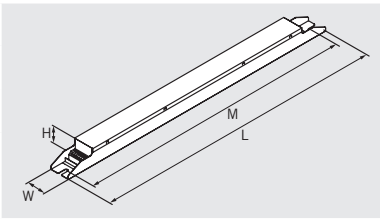

LENGTH	14.17”
WIDTH	1.20”
HEIGHT	1.00”
MOUNTING	13.50”
CASE STYLE	U2

Lead wires are 18 AWG105ºC/600V, solid copper.
Wire are included with ballast.

CASE MATERIAL: Steel

WIRING DIAGRAMS



Note: Keep Red Wires Shorter than 19.7” (0.5m)



ORDERING INFORMATION

ORDER CODE	PACKAGING STYLE	PACK QTY.	ITEM STATUS
KTLD-2LEDT8-UV-IS-VDIM-CP	Carton Pack	20	Quick Ship

CATALOG NUMBER BREAKDOWN

KTLD-2LEDT8-UV-IS-VDIM

KTLD	2	LEDT8	UV	IS	VDIM
Keystone Technologies LED Driver	2 Lamp	Lamp Type	Universal Voltage	Instant Start	0-10V Dimming

SINCE 1945 KEYSTONE | DIRECTDRIVE LED
LINE VOLTAGE T8 TUBES

KT-LED7T8-24GC-840-D

T8 LED LAMP

DESCRIPTION

7W T8 LED | 4000K | >83 CRI | High Efficiency

RoHS Compliant | 5 YEAR WARRANTY

LAMP TYPE: Linear
BULB TYPE: T8 LED
BASE TYPE: G13 (Medium Bi-Pin)
WATTAGE: 7W
COLOR TEMPERATURE: 4000K
COLOR RENDERING INDEX (CRI): >83
WARRANTY: 5 Years



PRODUCT FEATURES

- Replacement for Conventional Fluorescent Lamp
- 50,000+ Hour Lifetime
- Environmentally Friendly: No Mercury Used
- Instant Startup
- Frosted Lens Eliminates Pixelation
- UL Classified; Listed on DLC Qualified Product List
- Operating Temperature: -20ºC/-4ºF to 45ºC/113ºF
- Integral Driver (Isolated), Eliminates the Need for External Driver or Ballast
- 110+ Lumens per Watt
- Improved Lamp Durability with Shatterproof Coated Glass
- ETL Sanitation Listed NSF/ANSI Standard 2 - Food Equipment

OPERATING SPECIFICATIONS

ELECTRICAL CHARACTERISTICS

Input Voltage	Power Consumption	Power Factor	Input Current
120-277Vac	7W	>0.9	0.06A @ 120V 0.03A @ 277V

PHOTOMETRIC CHARACTERISTICS

Color Temperature (CCT)	4000K
Luminous Flux	900 lm
Color Rendering Index (CRI)	>83
Efficacy	129 lm/W
Beam Angle	240º
Visible Light Area	325º

RATED LIFE

L70 (Hours)	50,000

SPECTRAL DISTRIBUTION

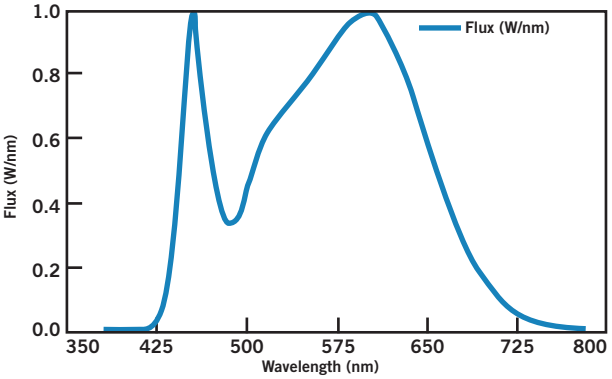

POLAR CANDELA DISTRIBUTION

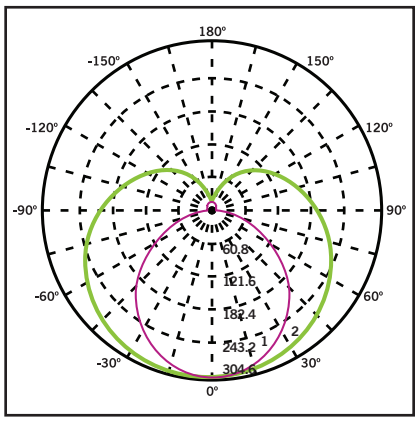

Maximum Candela = 1248.55
Located at Horizontal Angle = 0, Vertical Angle 0

1. **Violet** Vertical Plane through Horizontal Angles (90-270)
2. **Green** Vertical Plane through Horizontal Angles (0-180)

SINCE 1945 KEYSTONE | DIRECTDRIVE LED LINE VOLTAGE T8 TUBES

KT-LED7T8-24GC-840-D

T8 LED LAMP

WIRING DIAGRAMS

1. Cut all existing connections to ballast as shown below and remove ballast.

Typical Ballast Configurations:

PROGAM START

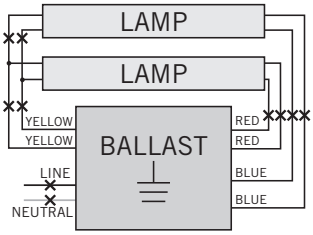

PREHEAT WITH STARTER

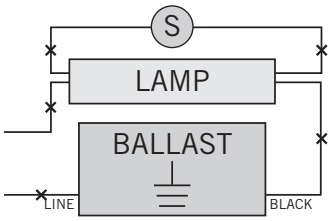

INSTANT START

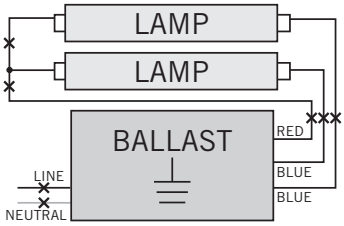

CAUTION: INSTANT START BALLAST WITH SHUNTED SOCKETS.

2. Re-wire fixture as shown below.

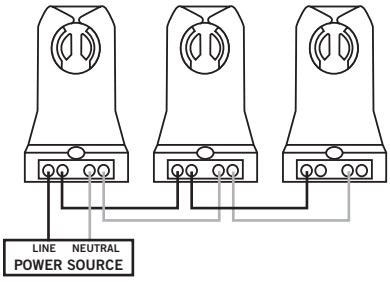

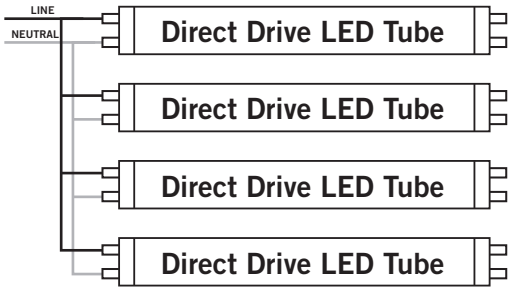

No Live Connection

Typical Non-Shunted Lampholder

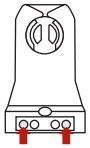

Connect wires directly to these terminals

CAUTION: Use only non-shunted lampholders.

Do not install product in a fixture with shunted lampholders (found in all fixtures using instant start ballasts). If the current lampholders are shunted, remove them and replace them with non-shunted lampholders. Make new connections directly to terminals as indicated above.

Keystone can provide any style replacement lampholders. Call us at 800-464-2680.

PHYSICAL CHARACTERISTICS

LAMP DIMENSIONS

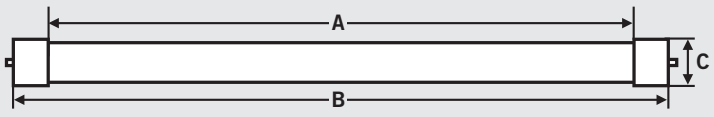

A (Illuminated Length)	20.31”
B (Body Length)	23.19”
C (Diameter)	1.10”

NOMINAL LENGTH: 24” **BASE TYPE:** G13 (Medium Bi-Pin)

ORDERING INFORMATION

ORDER CODE	PACKAGING STYLE	PACK QTY.	ITEM STATUS
KT-LED7T8-24GC-840-D-CP	Carton Pack (Egg Crate Packaging)	25	Quick Ship
KT-LED7T8-24GC-840-D-DP	Distributor Pack (Individual Cartons)	12	Quick Ship

CATALOG NUMBER BREAKDOWN

KT-LED7T8-24GC-840-D-CP

- KT — Keystone Technologies
- LED — LED Lamp
- 7 — Wattage
- T8 — Lamp Type
- 24 — Nominal Length (Inches)
- GC — Shatter-Proof Coated Glass
- 840 — 800 Series
- D — Color Temp.
- CP — Direct Drive Series
- Packaging Style

KEYSTONE SINCE 1945 | DIRECTDRIVE LED LINE VOLTAGE T5 TUBES

KT-LED9T5HE-24GC-840-D

T5 LED LAMP

DESCRIPTION

9W T5 LED | 4000K | >80 CRI | High Efficiency

c UL us CLASSIFIED | RoHS Compliant | 5 YEAR WARRANTY

LAMP TYPE: Linear
BULB TYPE: T5 LED
BASE TYPE: G5 (Miniature Bi-Pin)
WATTAGE: 9W
COLOR TEMPERATURE: 4000K
COLOR RENDERING INDEX (CRI): >80
WARRANTY: 5 Years



PRODUCT FEATURES

- Replacement for Conventional Fluorescent Lamp
- 50,000+ Hour Lifetime
- Environmentally Friendly: No Mercury Used
- Instant Startup
- Direct Replacement for F14T5 Fluorencent Lamp
- Frosted Lens Eliminates Pixelation
- UL Classified
- Operating Temperature: -20ºC/-4ºF to 45ºC/113ºF
- Integral Driver (Isolated), Eliminates the Need for External Driver or Ballast
- 120+ Lumens per Watt
- Improved Lamp Durability with Shatterproof Coated Glass
- ETL Sanitation Listed NSF/ANSI Standard 2 - Food Equipment

OPERATING SPECIFICATIONS

ELECTRICAL CHARACTERISTICS

Input Voltage	Power Consumption	Power Factor	Input Current
120-277Vac	9W	>0.9	0.08A @ 120V 0.03A @ 277V

PHOTOMETRIC CHARACTERISTICS

Color Temperature (CCT)	4000K
Luminous Flux	1150 lm
Color Rendering Index (CRI)	>80
Efficacy	128 lm/W
Beam Angle	240º
Visible Light Area	325º

RATED LIFE

L70 (Hours)	50,000

SPECTRAL DISTRIBUTION

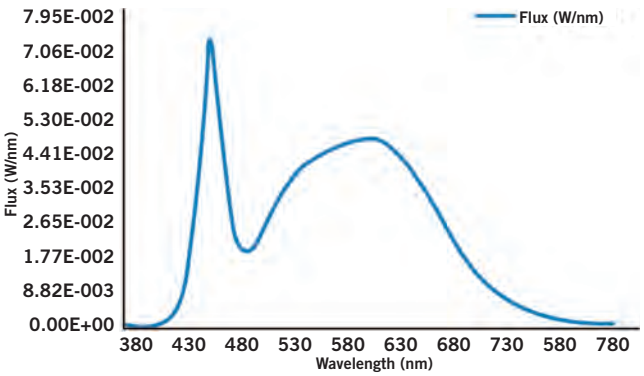

POLAR CANDELA DISTRIBUTION

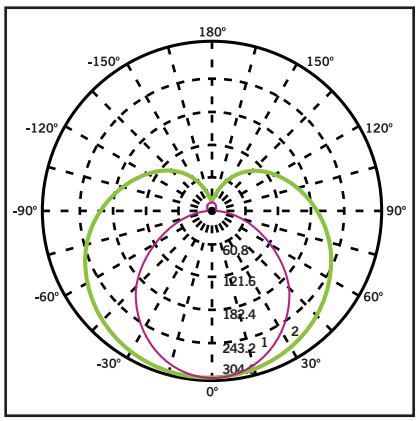

Located at Horizontal Angle = 0, Vertical Angle 0

1. **Violet** Vertical Plane through Horizontal Angles (90-270)
2. **Green** Vertical Plane through Horizontal Angles (0-180)

KEYSTONE SINCE 1945 | DIRECTDRIVE LED LINE VOLTAGE T5 TUBES

KT-LED9T5HE-24GC-840-D

T5 LED LAMP

WIRING DIAGRAMS

1. Cut all existing connections to ballast as shown below and remove ballast.

Typical Ballast Configurations:

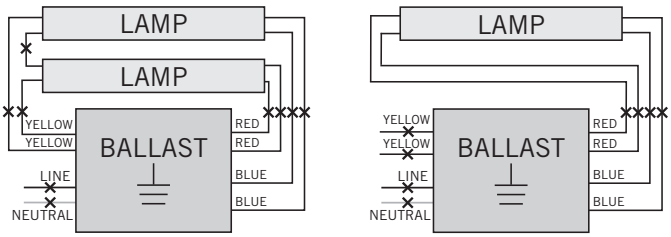

2. Re-wire fixture as shown below.

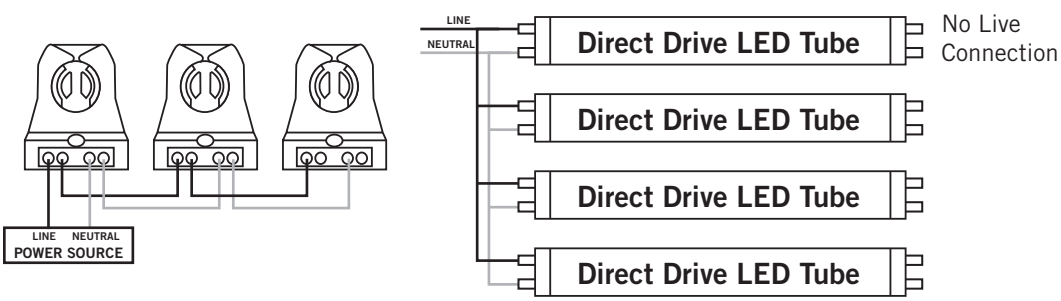

Typical Non-Shunted Lampholder



Connect wires directly to these terminals

CAUTION: Use only non-shunted lampholders.
Do not install product in a fixture with shunted lampholders (found in all fixtures using instant start ballasts). If the current lampholders are shunted, remove them and replace them with non-shunted lampholders. Make new connections directly to terminals as indicated above.

Keystone can provide any style replacement lampholders. Call us at 800-464-2680.

PHYSICAL CHARACTERISTICS

LAMP DIMENSIONS

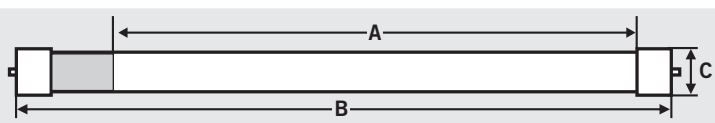

A (Illuminated Length)	17.63”
B (Body Length)	21.56”
C (Diameter)*	0.82”

NOMINAL LENGTH: 24” **BASE TYPE:** G5 (Miniature Bi-Pin)

*Though nominally referred to as a T5, this lamp has a T6 diameter

ORDERING INFORMATION

ORDER CODE	PACKAGING STYLE	PACK QTY.	ITEM STATUS
KT-LED9T5HE-24GC-840-D-CP	Carton Pack (Egg Crate Packaging)	25	Quick Ship

CATALOG NUMBER BREAKDOWN

KT-LED9T5HE-24GC-840-D-CP

- KT: Keystone Technologies
- LED: LED Lamp
- 9: Wattage
- T5HE: Lamp Type
- 24: Nominal Length (Inches)
- GC: Shatter-Proof Coated Glass
- 840: 800 Series
- 840: Color Temp.
- D: Direct Drive Series
- CP: Packaging Style

KEYSTONE SINCE 1945

DIRECTDRIVE LED
LINE VOLTAGE T8 TUBES

KT-LED12.5T8-48GC-840-D

T8 LED LAMP

DESCRIPTION

12.5W T8 LED | 4000K | >83 CRI | High Efficiency

LAMP TYPE: Linear	
BULB TYPE: T8 LED	
BASE TYPE: G13 (Medium Bi-Pin)	
WATTAGE: ~12.5W	
COLOR TEMPERATURE: 4000K	
COLOR RENDERING INDEX (CRI): >83	
WARRANTY: 5 Years	



PRODUCT FEATURES

- Replacement for Conventional Fluorescent Lamp
- Listed on DLC Qualified Product List
- 50,000+ Hour Lifetime
- Approximately 50% More Energy Efficient that Standard F32T8 Lamps
- Environmentally Friendly: No Mercury Used
- Instant Startup
- Frosted Lens Eliminates Pixelation
- UL Classified
- Operating Temperature: -20ºC/-4ºF to 45ºC/113ºF
- Integral Driver (Isolated), Eliminates the Need for External Driver or Ballast
- 120+ Lumens per Watt
- Improved Lamp Durability with Shatterproof Coated Glass
- ETL Sanitation Listed NSF/ANSI Standard 2 - Food Equipment

OPERATING SPECIFICATIONS

ELECTRICAL CHARACTERISTICS

Input Voltage	Power Consumption	Power Factor	Input Current
120-277Vac	~12.5W	>0.9	0.12A @ 120V 0.05A @ 277V

PHOTOMETRIC CHARACTERISTICS

Color Temperature (CCT)	4000K
Luminous Flux	1750 lm
Color Rendering Index (CRI)	>83
Efficacy	132 lm/W
Beam Angle	240º
Visible Light Area	325º

RATED LIFE

L70 (Hours)	50,000

SPECTRAL DISTRIBUTION

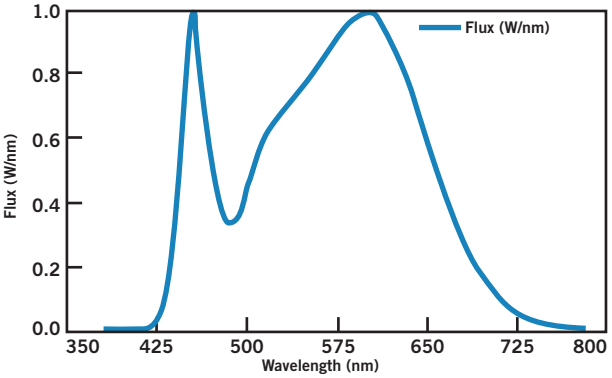

POLAR CANDELA DISTRIBUTION

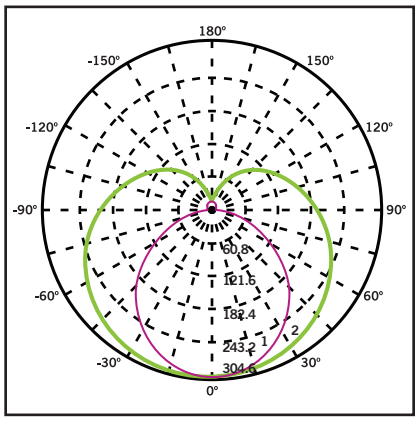

Maximum Candela = 1248.55
Located at Horizontal Angle = 0,
Vertical Angle 0

1. **Violet** Vertical Plane through Horizontal Angles (90-270)
2. **Green** Vertical Plane through Horizontal Angles (0-180)

Keystone Technologies • 1390 Welsh Road, North Wales, PA 19454 • Phone (800) 464-2680 • Fax (888) 966-0556 • **www.keystonetech.com**

Specifications subject to change. Last revised on10.4.16

SINCE 1945 KEYSTONE | DIRECTDRIVE LED
LINE VOLTAGE T8 TUBES

KT-LED12.5T8-48GC-840-D
T8 LED LAMP

WIRING DIAGRAMS

1. Cut all existing connections to ballast as shown below and remove ballast.

Typical Ballast Configurations:

PROGAM START

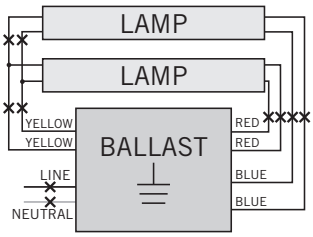

PREHEAT WITH STARTER

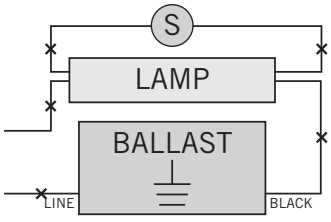

INSTANT START

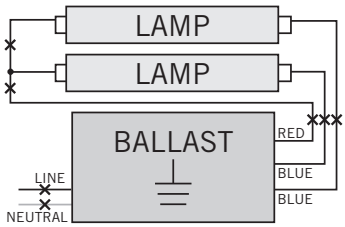

CAUTION: INSTANT START BALLAST WITH SHUNTED SOCKETS.

2. Re-wire fixture as shown below.

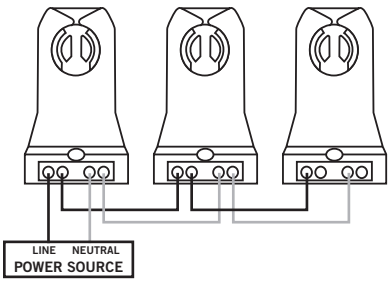

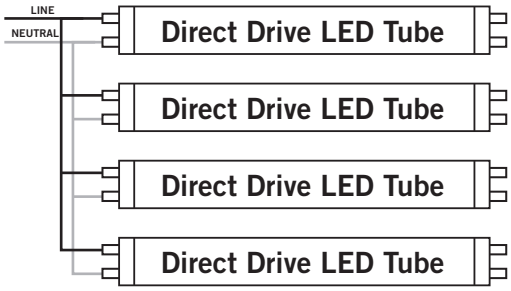

No Live Connection

Typical Non-Shunted Lampholder

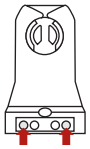

Connect wires directly to these terminals

CAUTION: Use only non-shunted lampholders.

Do not install product in a fixture with shunted lampholders (found in all fixtures using instant start ballasts). If the current lampholders are shunted, remove them and replace them with non-shunted lampholders. Make new connections directly to terminals as indicated above.

Keystone can provide any style replacement lampholders. Call us at 800-464-2680.

PHYSICAL CHARACTERISTICS

LAMP DIMENSIONS

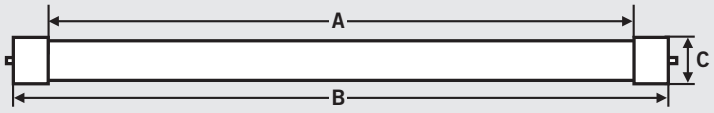

A (Illuminated Length)	44.38”
B (Body Length)	47.15”
C (Diameter)	1.10”

NOMINAL LENGTH: 48” **BASE TYPE:** G13 (Medium Bi-Pin)

ORDERING INFORMATION

ORDER CODE	PACKAGING STYLE	PACK QTY.	ITEM STATUS
KT-LED12.5T8-48GC-840-D-CP	Carton Pack (Egg Crate Packaging)	25	Quick Ship

CATALOG NUMBER BREAKDOWN

KT-LED12.5T8-48GC-840-D-CP

Keystone Technologies	LED Lamp	Wattage	Lamp Type	Nominal Length (Inches)	Shatter-Proof Coated Glass	800 Series	Color Temp.	Direct Drive Series	Packaging Style

SINCE 1945 KEYSTONE | DIRECTDRIVE LED
LINE VOLTAGE T8 TUBES

KT-LED12T8-36GC-840-D

T8 LED LAMP

DESCRIPTION

12W T8 LED | 4000K | >83 CRI | High Efficiency

RoHS Compliant | 5 YEAR WARRANTY

LAMP TYPE: Linear
BULB TYPE: T8 LED
BASE TYPE: G13 (Medium Bi-Pin)
WATTAGE: 12W
COLOR TEMPERATURE: 4000K
COLOR RENDERING INDEX (CRI): >83
WARRANTY: 5 Years



PRODUCT FEATURES

- Replacement for Conventional Fluorescent Lamp
- 50,000+ Hour Lifetime
- Environmentally Friendly: No Mercury Used
- Instant Startup
- Frosted Lens Eliminates Pixelation
- UL Classified
- Operating Temperature: -20ºC/-4ºF to 45ºC/113ºF
- Integral Driver (Isolated), Eliminates the Need for External Driver or Ballast
- 100+ Lumens per Watt
- Improved Lamp Durability with Shatterproof Coated Glass

OPERATING SPECIFICATIONS

ELECTRICAL CHARACTERISTICS

Input Voltage	Power Consumption	Power Factor	Input Current
120-277Vac	12W	>0.9	0.108A @ 120V 0.043A @ 277V

PHOTOMETRIC CHARACTERISTICS

Color Temperature (CCT)	4000K
Luminous Flux	1250 lm
Color Rendering Index (CRI)	>83
Efficacy	104 lm/W
Beam Angle	240º
Visible Light Area	325º

RATED LIFE

L70 (Hours)	50,000

SPECTRAL DISTRIBUTION

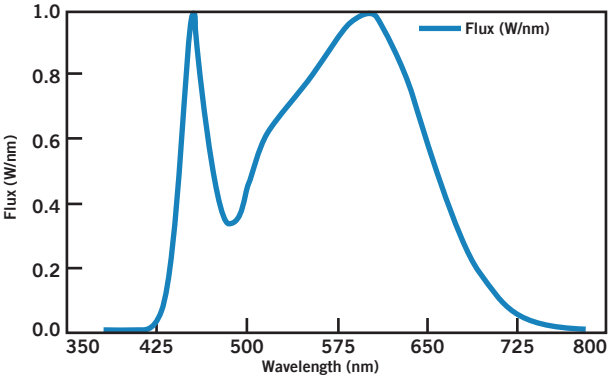

POLAR CANDELA DISTRIBUTION

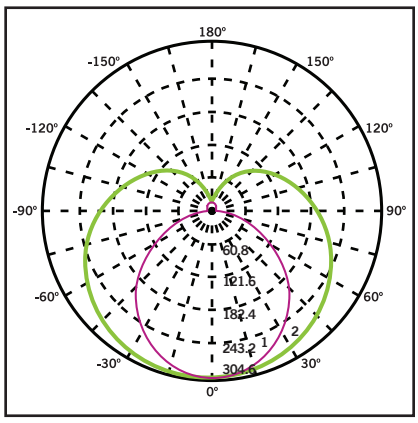

Maximum Candela = 1248.55
Located at Horizontal Angle = 0, Vertical Angle 0

1. **Violet** Vertical Plane through Horizontal Angles (90-270)
2. **Green** Vertical Plane through Horizontal Angles (0-180)

SINCE 1945 KEYSTONE | DIRECTDRIVE LED LINE VOLTAGE T8 TUBES

KT-LED12T8-36GC-840-D

T8 LED LAMP

WIRING DIAGRAMS

1. Cut all existing connections to ballast as shown below and remove ballast.

Typical Ballast Configurations:

PROGAM START

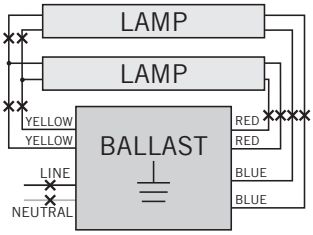

PREHEAT WITH STARTER

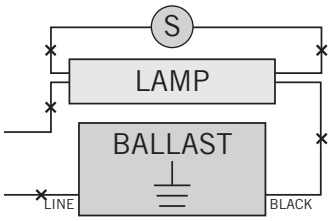

INSTANT START

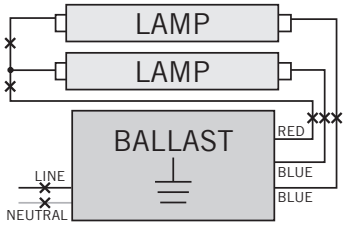

CAUTION: INSTANT START BALLAST WITH SHUNTED SOCKETS.

2. Re-wire fixture as shown below.

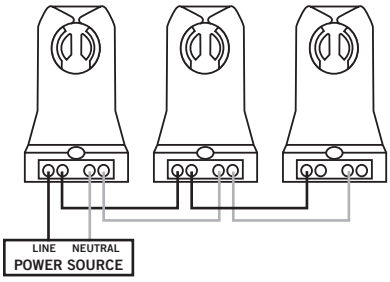

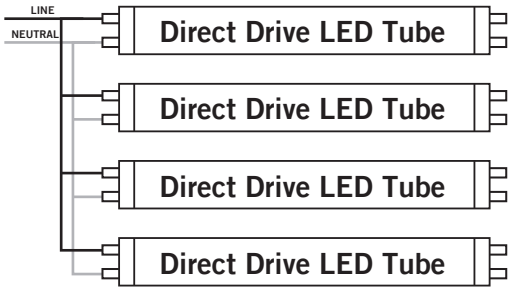

No Live Connection

Typical Non-Shunted Lampholder

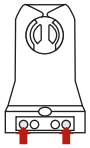

Connect wires directly to these terminals

CAUTION: Use only non-shunted lampholders.

Do not install product in a fixture with shunted lampholders (found in all fixtures using instant start ballasts). If the current lampholders are shunted, remove them and replace them with non-shunted lampholders. Make new connections directly to terminals as indicated above.

Keystone can provide any style replacement lampholders. Call us at 800-464-2680.

PHYSICAL CHARACTERISTICS

LAMP DIMENSIONS

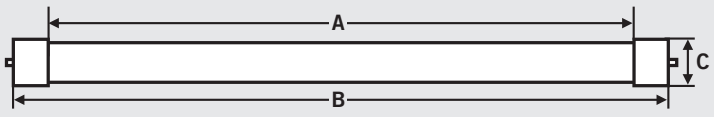

A (Illuminated Length)	32.36”
B (Body Length)	35.19”
C (Diameter)	1.10”

NOMINAL LENGTH: 36” **BASE TYPE:** G13 (Medium Bi-Pin)

ORDERING INFORMATION

ORDER CODE	PACKAGING STYLE	PACK QTY.	ITEM STATUS
KT-LED12T8-36GC-840-D-CP	Carton Pack (Egg Crate Packaging)	25	Quick Ship
KT-LED12T8-36GC-840-D-DP	Distributor Pack (Individual Cartons)	12	Quick Ship

CATALOG NUMBER BREAKDOWN

KT-LED12T8-36GC-840-D-CP

Keystone Technologies	LED Lamp	Wattage	Lamp Type	Nominal Length (Inches)	Shatter-Proof Coated Glass	800 Series	Color Temp.	Direct Drive Series	Packaging Style

SINCE 1945 KEYSTONE | DIRECTDRIVE LED LINE VOLTAGE T5 TUBES

KT-LED13T5HE-48GC-840-D

T5 LED LAMP

DESCRIPTION

13W T5 LED | 4000K | >80 CRI | High Efficiency

RoHS Compliant 5 YEAR WARRANTY

LAMP TYPE: Linear
BULB TYPE: T5 LED
BASE TYPE: G5 (Miniature Bi-Pin)
WATTAGE: 13W
COLOR TEMPERATURE: 4000K
COLOR RENDERING INDEX (CRI): >80
WARRANTY: 5 Years



PRODUCT FEATURES

- Listed on DLC QPL
- Replacement for Conventional Fluorescent Lamp
- 50,000+ Hour Lifetime
- Environmentally Friendly: No Mercury Used
- Instant Startup
- Direct Replacement for F28T5 Fluorencent Lamp
- Frosted Lens Eliminates Pixelation
- UL Classified
- Operating Temperature: -20ºC/-4ºF to 45ºC/113ºF
- Integral Driver (Isolated), Eliminates the Need for External Driver or Ballast
- 120+ Lumens per Watt
- Improved Lamp Durability with Shatterproof Coated Glass
- ETL Sanitation Listed NSF/ANSI Standard 2 - Food Equipment

OPERATING SPECIFICATIONS

ELECTRICAL CHARACTERISTICS

Input Voltage	Power Consumption	Power Factor	Input Current
120-277Vac	13W	>0.9	0.11A @ 120V 0.05A @ 277V

PHOTOMETRIC CHARACTERISTICS

Color Temperature (CCT)	4000K
Luminous Flux	1750 lm
Color Rendering Index (CRI)	>80
Efficacy	135 lm/W
Beam Angle	240º
Visible Light Area	325º

RATED LIFE

L70 (Hours)	50,000

SPECTRAL DISTRIBUTION

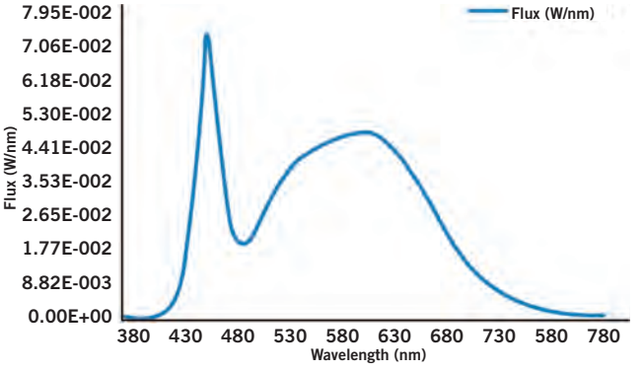

POLAR CANDELA DISTRIBUTION

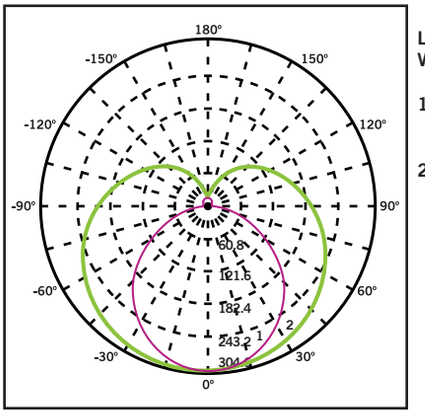

Located at Horizontal Angle = 0, Vertical Angle 0

1. **Violet** Vertical Plane through Horizontal Angles (90-270)
2. **Green** Vertical Plane through Horizontal Angles (0-180)

Keystone Technologies • 1390 Welsh Road, North Wales, PA 19454 • Phone (800) 464-2680 • Fax (888) 966-0556 • **www.keystonetech.com**

Specifications subject to change. Last revised on 5.25.17

SINCE 1945 KEYSTONE | DIRECTDRIVE LED LINE VOLTAGE T5 TUBES

KT-LED13T5HE-48GC-840-D

T5 LED LAMP

WIRING DIAGRAMS

1. Cut all existing connections to ballast as shown below and remove ballast.

Typical Ballast Configurations:

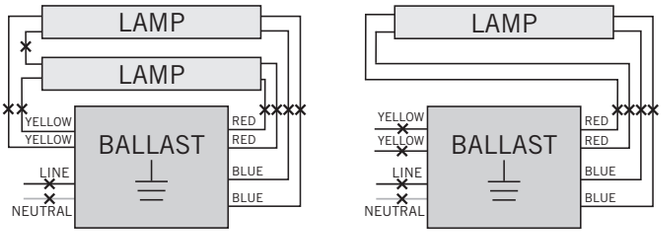

2. Re-wire fixture as shown below.

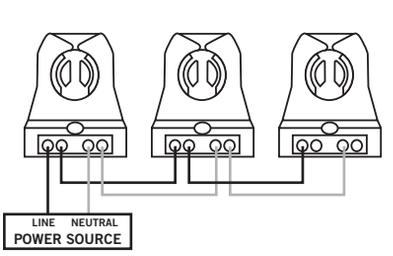

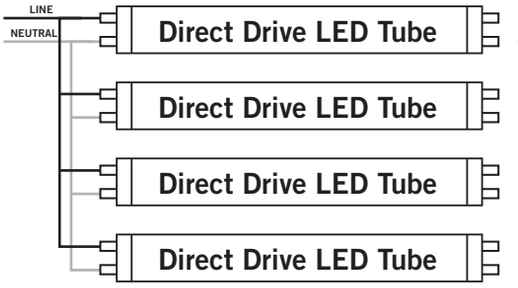

No Live Connection

Typical Non-Shunted Lampholder



Connect wires directly to these terminals

CAUTION: Use only non-shunted lampholders.

Do not install product in a fixture with shunted lampholders (found in all fixtures using instant start ballasts). If the current lampholders are shunted, remove them and replace them with non-shunted lampholders. Make new connections directly to terminals as indicated above.

Keystone can provide any style replacement lampholders. Call us at 800-464-2680.

PHYSICAL CHARACTERISTICS

LAMP DIMENSIONS

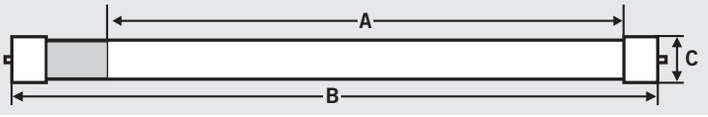

A (Illuminated Length)	41.38”
B (Body Length)	45.19”
C (Diameter)*	0.82”

NOMINAL LENGTH: 48” **BASE TYPE:** G5 (Miniature Bi-Pin)

*Though nominally referred to as a T5, this lamp has a T6 diameter

ORDERING INFORMATION

ORDER CODE	PACKAGING STYLE	PACK QTY.	ITEM STATUS
KT-LED13T5HE-48GC-840-D-CP	Carton Pack (Egg Crate Packaging)	25	Quick Ship

CATALOG NUMBER BREAKDOWN

KT-LED13T5HE-48GC-840-D-CP

KT	LED13	T5HE	48	GC	840	D	CP
Keystone Technologies	LED Lamp	Wattage	Lamp Type	Nominal Length (Inches)	Shatter-Proof Coated Glass	800 Series	Color Temp.	Direct Drive Series	Packaging Style

SINCE 1945 KEYSTONE | SMARTDRIVE LED PLUG & PLAY WITH BALLAST

KT-LED14T8-48GC-840-S

T8 LED LAMP

DESCRIPTION

cULus LISTED RoHS Compliant 5 YEAR WARRANTY

14W T8 LED | 4000K | >80 CRI | High Efficiency | Ballast Compatible

LAMP TYPE: Linear
BULB TYPE: T8 LED
BASE TYPE: G13 (Medium Bi-Pin)
WATTAGE: 14W
COLOR TEMPERATURE: 4000K
COLOR RENDERING INDEX (CRI): >80
WARRANTY: 5 Years



PRODUCT FEATURES

- **Compatible with Most Instant and Program Start Electronic T8 Ballasts, Contact Keystone for Ballast Compatibility List**
- Direct Replacement for the Following Fluorescent Lamps: F32T8/32W, F32T8/30W, F32T8/28W, F32T8/25W
- UL Listed; Was Listed on DLC QPL prior to April 2017
- 50,000+ Hour Lifetime
- Environmentally Friendly: No Mercury Used
- Instant Startup
- Frosted Lens Eliminates Pixelation
- Operating Temperature: -20ºC/-4ºF to 45ºC/113ºF
- 100+ Lumens per Watt (Bare Lamp Efficacy)
- Suitable for Dry and Damp Locations
- Improved Lamp Durability with Shatterproof Coated Glass

OPERATING SPECIFICATIONS

ELECTRICAL AND PERFORMANCE CHARACTERISTICS

Input Voltage	CRI	Bare Lamp Wattage	Nominal Lamp Lumens	System Wattage*			Initial Lumens*			Beam Angle	Nominal Bare Lamp Efficacy	Power Factor	Max. THD
				0.78BF	0.88BF	1.18BF	0.78BF	0.88BF	1.18BF				
Ballast Dependent	>80	14W	1800 lm	14.2W	16.4W	22.1W	1670 lm	1940 lm	2560 lm	220º	128.6	>0.9	20%

** Nominal values. Actual values may vary depending on electronic ballast used.*

RATED LIFE

L70 (Hours)	50,000

SPECTRAL DISTRIBUTION

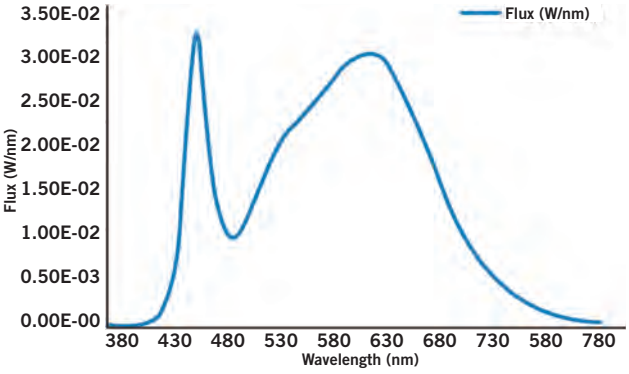

POLAR CANDELA DISTRIBUTION

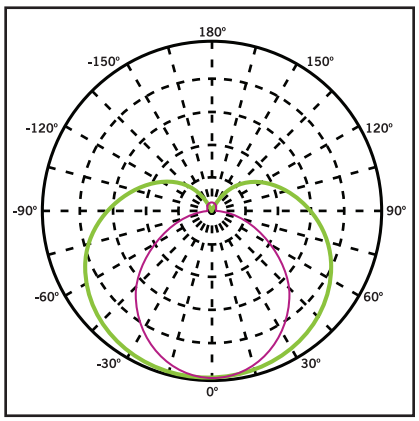

Maximum Candela = 1248.55
Located at Horizontal Angle = 0, Vertical Angle 0

1. **Violet** Vertical Plane through Horizontal Angles (90-270)
2. **Green** Vertical Plane through Horizontal Angles (0-180)

Beam Angle: 220º

Visible Light Area: 325º

Keystone Technologies • 208 Progress Drive, Montgomeryville, PA 18936 • Phone (800) 464-2680 • Fax (888) 966-0556 • **www.keystonelamp.com**

Specifications subject to change. Last revised on 4.4.17

SINCE 1945 KEYSTONE | SMARTDRIVE LED PLUG & PLAY WITH BALLAST

KT-LED14T8-48GC-840-S

T8 LED LAMP

WIRING

Plug and Play: Simply replace the existing fluorescent lamp with Keystone Smart Drive LED lamp. No changes to the existing fluorescent ballast wiring needed. For ballast compability questions, please contact Keystone.

PHYSICAL CHARACTERISTICS

LAMP DIMENSIONS

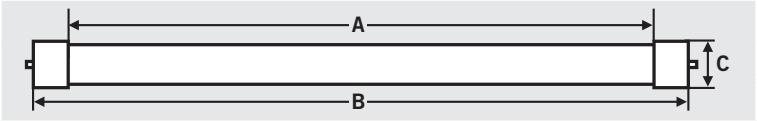

A (Illuminated Length)	44.70”
B (Body Length)	47.15”
C (Diameter)	1.00”

NOMINAL LENGTH: 48” **BASE TYPE:** G13 (Medium Bi-Pin)

ORDERING INFORMATION

ORDER CODE	PACKAGING STYLE	PACK QTY.	ITEM STATUS
KT-LED14T8-48GC-840-S-CP	Carton Pack (Egg Crate Packaging)	25	Quick Ship
KT-LED14T8-48GC-840-S-DP	Distributor Pack (Individual Cartons)	20	Quick Ship

CATALOG NUMBER BREAKDOWN

KT-LED14T8-48GC-840-S-CP

KT	LED14T8	48	GC	840	S	CP
Keystone Technologies	LED Lamp	Wattage	Lamp Type	Nominal Length (Inches)	Shatterproof Coated Glass	800 Series	Color Temp.	Smart Drive Series	Packaging Style

KEYSTONE SINCE 1945

DIRECTDRIVE LED
LINE VOLTAGE PLL LAMPS

KT-LED17PLL-22G-840-D

PLL LED LAMP

DESCRIPTION

17W PLL LED | 4000K | >80 CRI | High Efficiency

LAMP TYPE: PLL
BULB TYPE: T8 LED
BASE TYPE: 2G11
WATTAGE: 17W
COLOR TEMPERATURE: 4000K
COLOR RENDERING INDEX (CRI): >80
WARRANTY: 5 Years



PRODUCT FEATURES

- **Replacement for Conventional Fluorescent Lamp**
- UL Classified
- 50,000+ Hour Lifetime
- Approximately 50% More Energy Efficient than Standard FT40/2G11 Lamps
- Environmentally Friendly: No Mercury Used
- Integral Driver (Isolated) Eliminates the Need for an External Ballast or Driver
- Instant Startup
- Not Dimmable
- Frosted Lens Eliminates Pixelation
- Operating Temperature: -20ºC/-4ºF to 45ºC/113ºF
- 100+ Lumens per Watt (Bare Lamp Efficacy)
- Suitable for Dry and Damp Locations
- NSF Listed: NSF/ANSI Standard 2 - Food Equipment

OPERATING SPECIFICATIONS

ELECTRICAL AND PERFORMANCE CHARACTERISTICS

Input Voltage	CRI	Bare Lamp Wattage	Nominal Lamp Lumens	Beam Angle	Nominal Bare Lamp Efficacy	Power Factor	Max. THD
120-277V	>80	17W	2200	220º	129 lm/W	>0.9	20%

RATED LIFE

L70 (Hours)	50,000

SPECTRAL DISTRIBUTION

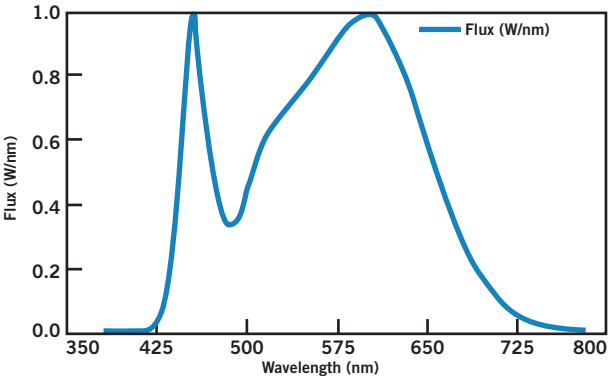

POLAR CANDELA DISTRIBUTION

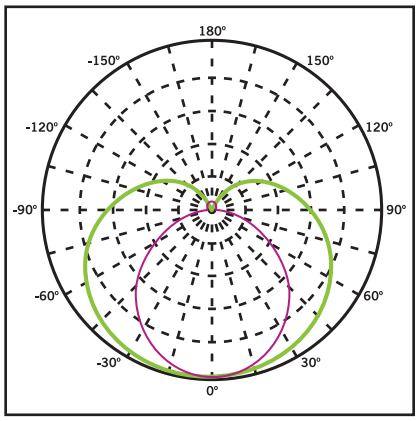

Located at Horizontal Angle = 0, Vertical Angle 0

1. **Violet** Vertical Plane through Horizontal Angles (90-270)
2. **Green** Vertical Plane through Horizontal Angles (0-180)

Beam Angle: 220º

Visible Light Area: 325º

SINCE 1945 KEYSTONE | DIRECTDRIVE LED
LINE VOLTAGE PLL LAMPS

KT-LED17PLL-22G-840-D

PLL LED LAMP

WIRING

Re-wire fixture as shown below.

Typical Ballast Configurations

✕ Indicates Where to Cut Existing Wiring

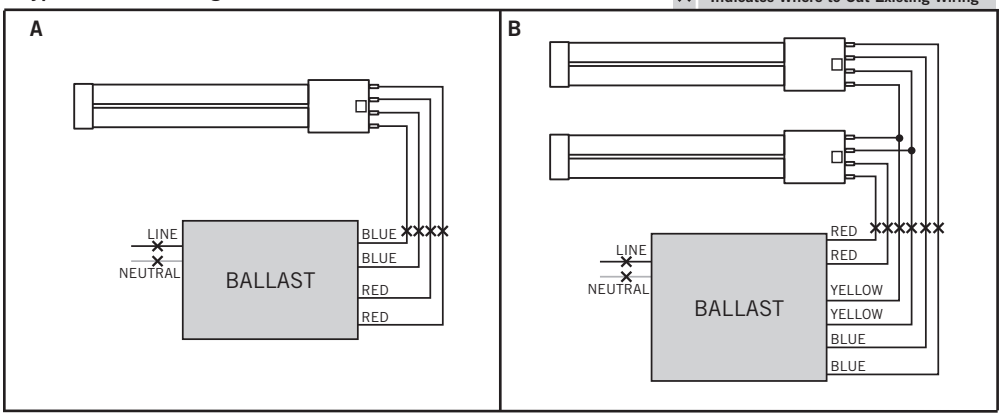

***Note**

Lamp(s) will light as long as line input is connected to one of the three pins designated with L# and Neutral is connected to the pin designated with (**N**). If additional wires are in place from previous installation, ensure all wires are connected as shown in diagram. **Do not leave loose wires exposed**.

Single Lamp

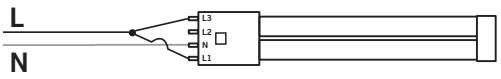

Multiple Lamps

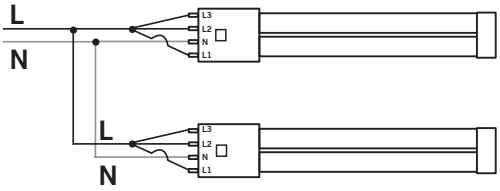

PHYSICAL CHARACTERISTICS

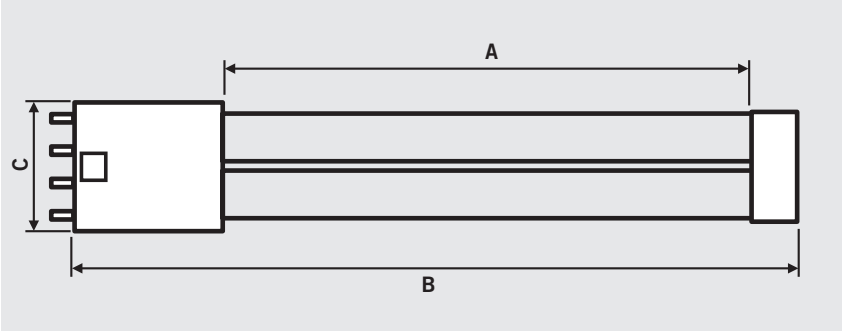

LAMP DIMENSIONS

A (Illuminated Length)	19.25”
B (Body Length)	22.31”
D (Width)	1.75”
Base Type	2G11

SINCE 1945 KEYSTONE | DIRECTDRIVE LED
LINE VOLTAGE PLL LAMPS

KT-LED17PLL-22G-840-D

PLL LED LAMP

ORDERING INFORMATION

ORDER CODE	PACKAGING STYLE	PACK QTY.	ITEM STATUS
KT-LED17PLL-22G-840-D-CP	Carton Pack (Egg Crate Packaging)	12	Quick Ship

CATALOG NUMBER BREAKDOWN

KT-LED17PLL-22G-840-D-CP

KT	LED17	PLL	22	G	840	D	CP
Keystone Technologies	LED Lamp	Wattage	Lamp Type	Nominal Size	800 Series	Color Temp.	Direct Drive Series	Packaging Style

SINCE 1945 KEYSTONE | SMARTDRIVE LED PLUG & PLAY WITH BALLAST

KT-LED17T8-U6GC-840-S

U-BEND T8 LED LAMP

DESCRIPTION

17W T8 U-Bend LED | 4000K | >80 CRI | High Efficiency | Ballast Compatible

NSF · cULus LISTED · RoHS Compliant · 5 YEAR WARRANTY

LAMP TYPE: U-Bend
BULB TYPE: T8 LED
BASE TYPE: G13 (Medium Bi-Pin)
WATTAGE: 17W
COLOR TEMPERATURE: 4000K
COLOR RENDERING INDEX (CRI): >80
WARRANTY: 5 Years



PRODUCT FEATURES

- **Compatible with Most Instant and Program Start Electronic T8 Ballasts, Contact Keystone for Ballast Compatibility List**
- Direct Replacement for the Following Fluorescent Lamps: F32T8/32W, F32T8/30W, F32T8/28W, F32T8/25W
- UL Listed
- 50,000+ Hour Lifetime
- Environmentally Friendly: No Mercury Used
- Instant Startup
- Frosted Lens Eliminates Pixelation
- Operating Temperature: -20ºC/-4ºF to 45ºC/113ºF
- 100+ Lumens per Watt (Bare Lamp Efficacy)
- Suitable for Dry and Damp Locations
- Improved Lamp Durability with Shatterproof Coated Glass
- NSF Listed: NSF/ANSI Standard 2 - Food Equipment

OPERATING SPECIFICATIONS

ELECTRICAL AND PERFORMANCE CHARACTERISTICS

Input Voltage	CRI	Bare Lamp Wattage	Nominal Lamp Lumens	System Wattage*			Initial Lumens*			Beam Angle	Nominal Bare Lamp Efficacy	Power Factor	Max. THD
				0.78BF	0.88BF	1.18BF	0.78BF	0.88BF	1.18BF				
Ballast Dependent	>80	17W	2200 lm	17.2W	20.2W	27.8W	1990 lm	2300 lm	2930 lm	220º	129.4	>0.9	20%

** Nominal values. Actual values may vary depending on electronic ballast used.*

RATED LIFE

L70 (Hours)	50,000

SPECTRAL DISTRIBUTION

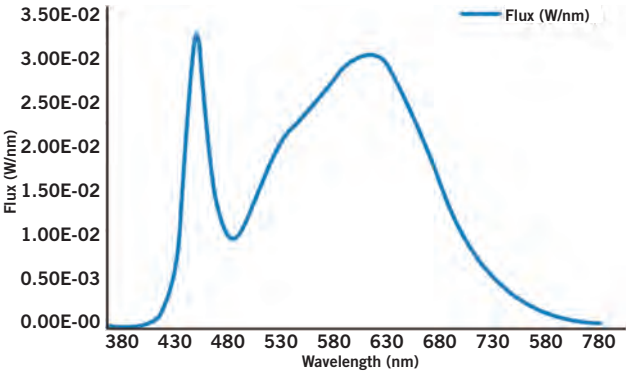

POLAR CANDELA DISTRIBUTION

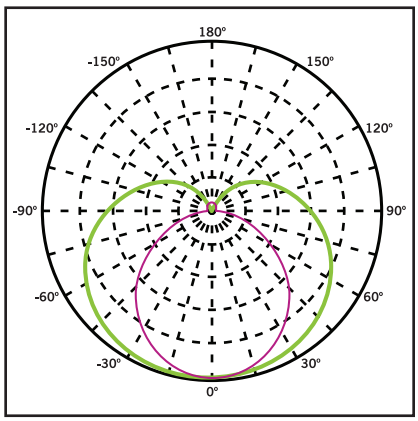

Maximum Candela = 1248.55 Located at Horizontal Angle = 0, Vertical Angle 0

1. **Violet** Vertical Plane through Horizontal Angles (90-270)
2. **Green** Vertical Plane through Horizontal Angles (0-180)

Beam Angle: 220º

Visible Light Area: 325º

SINCE 1945 KEYSTONE | SMARTDRIVE LED PLUG & PLAY WITH BALLAST

KT-LED17T8-U6GC-840-S

U-BEND T8 LED LAMP

WIRING

Plug and Play: Simply replace the existing fluorescent lamp with Keystone Smart Drive LED lamp. No changes to the existing fluorescent ballast wiring needed. For ballast compability questions, please contact Keystone.

PHYSICAL CHARACTERISTICS

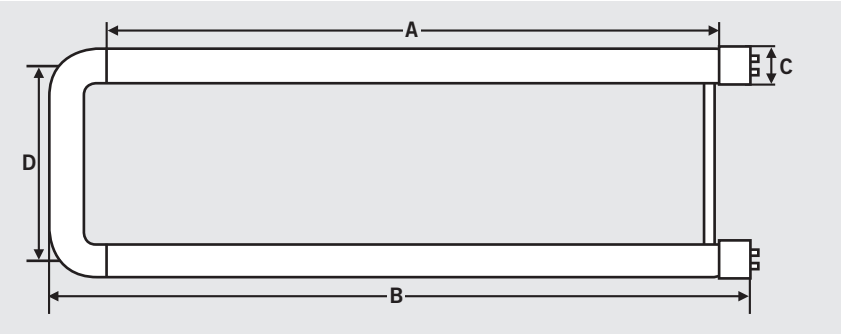

LAMP DIMENSIONS

A (Illuminated Length)	20.2”
B (Body Length)	22.25”
C (Diameter)	1.00”
D (Width)	6.00”
Nominal Length	6” U-Bend
Base Type	G13 (Medium Bi-Pin)

ORDERING INFORMATION

ORDER CODE	PACKAGING STYLE	PACK QTY.	ITEM STATUS
KT-LED17T8-U6GC-840-S-CP	Carton Pack (Egg Crate Packaging)	25	Quick Ship
KT-LED17T8-U6GC-840-S-DP	Distributor Pack (Individual Cartons)	20	Quick Ship

CATALOG NUMBER BREAKDOWN

KT-LED17T8-U6GC-840-S-CP

Keystone Technologies	LED Lamp	Wattage	Lamp Type	Nominal Size	Shatterproof Coated Glass	800 Series	Color Temp.	Smart Drive Series	Packaging Style

KT-LED19HID-E26-850-D

HID REPLACEMENT LED LAMP

DESCRIPTION

19W HID Replacement LED Lamp | 5000K | >83 CRI | IP64 Rated

LAMP TYPE: HID Replacement LED
BASE TYPE: E26 (Medium)
WATTAGE: 19W
COLOR TEMPERATURE: 5000K
METAL HALIDE EQUIVALENT: 75W
COLOR RENDERING INDEX (CRI): >83
WARRANTY: 5 Years



PRODUCT FEATURES

- Replacement for Conventional Metal Halide Lamp
- Non-Dimmable; Do Not Dim
- 50,000+ Hour Lifetime
- Environmentally Friendly: No Mercury Used
- Instant Startup
- UL Listed
- Operating Temperature: -40ºC/-40ºF to 60ºC/140ºF
- Integral Driver, Eliminates the Need for External Driver or Ballast; Includes 4kV Surge Protection
- IP64 Rated; Integrated Heat Sink Quickly Dissipates Heat and Guides Water Intrusion Out of the Lamp

OPERATING SPECIFICATIONS

ELECTRICAL CHARACTERISTICS

Input Voltage	Power Consumption	Power Factor	Input Current
120-277Vac	19W	>0.9	0.16A @ 120V 0.07A @ 277V

RATED LIFE

L70 (Hours)	50,000

PHOTOMETRIC CHARACTERISTICS

Color Temperature (CCT)	5000K
Luminous Flux	2400 lm
Color Rendering Index (CRI)	>83
Efficacy	126 lm/W
Visible Light Area	360º

SPECTRAL DISTRIBUTION

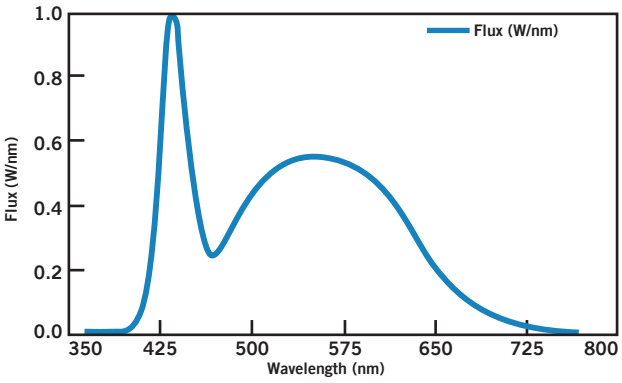

LUX DISTANCE CURVE

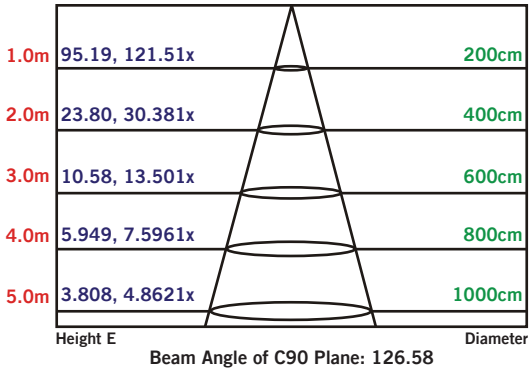

Beam Angle of C90 Plane: 126.58

Keystone Technologies • 1390 Welsh Road, North Wales, PA 19454 • Phone (800) 464-2680 • Fax (888) 966-0556 • www.keystonetech.com

Specifications subject to change. Last revised on 1.23.17

KT-LED19HID-E26-850-D

HID REPLACEMENT LED LAMP

WIRING DIAGRAM

STEP 1
Disconnect power. Disconnect and remove existing ballast, capacitor, and/or ignitor (where applicable) from fixture.

STEP 2
Rewire for line voltage to the lamp socket.

STEP 3
Install new LED replacement lamp. Ensure lamp is operating properly when power is turned on.

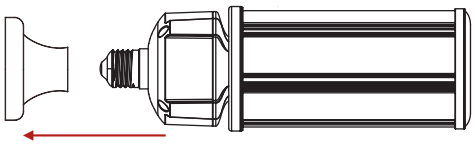

FIGURE 1

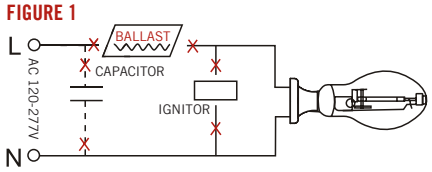

FIGURE 2

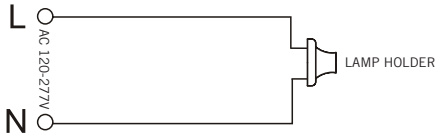

FIGURE 3

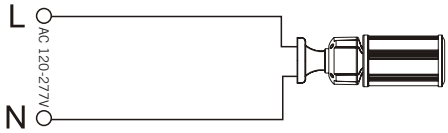

PHYSICAL CHARACTERISTICS

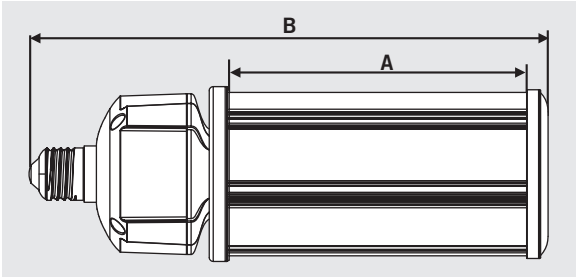

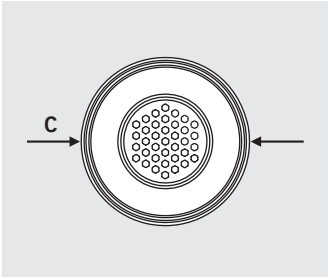

LAMP DIMENSIONS

A (Illuminated Length)	2.70”
B (Body Length)	6.12”
C (Diameter)	2.40”

BASE TYPE: E26 (Medium)

ORDERING INFORMATION

ORDER CODE	PACKAGING STYLE	PACK QTY.	ITEM STATUS
KT-LED19HID-E26-850-D-DP	Distributor Pack (Individual Cartons)	16	Quick Ship

CATALOG NUMBER BREAKDOWN

KT-LED19HID-E26-850-D-DP

- KT — Keystone Technologies
- LED19HID — LED Lamp
- E26 — Wattage
- 850 — Lamp Type
- D — Base Type
- DP — Packaging Style

800 Series
Color Temp.
Direct Drive Series

KT-LED27HID-E26-850-D

HID REPLACEMENT LED LAMP

DESCRIPTION

27W HID Replacement LED Lamp | 5000K | >83 CRI | IP64 Rated

LAMP TYPE: HID Replacement LED
BASE TYPE: E26 (Medium)
WATTAGE: 27W
COLOR TEMPERATURE: 5000K
METAL HALIDE EQUIVALENT: 100W
COLOR RENDERING INDEX (CRI): >83
WARRANTY: 5 Years



PRODUCT FEATURES

- Replacement for Conventional Metal Halide Lamp
- Non-Dimmable; Do Not Dim
- 50,000+ Hour Lifetime
- Environmentally Friendly: No Mercury Used
- Instant Startup
- UL Listed
- Operating Temperature: -29ºC/-20ºF to 60ºC/140ºF
- Integral Driver, Eliminates the Need for External Driver or Ballast; Includes 4kV Surge Protection
- IP64 Rated; Integrated Heat Sink Quickly Dissipates Heat and Guides Water Intrusion Out of the Lamp

OPERATING SPECIFICATIONS

ELECTRICAL CHARACTERISTICS

Input Voltage	Power Consumption	Power Factor	Input Current
120-277Vac	27W	>0.9	0.23A @ 120V 0.10A @ 277V

RATED LIFE

L70 (Hours)	50,000

PHOTOMETRIC CHARACTERISTICS

Color Temperature (CCT)	5000K
Luminous Flux	3830 lm
Color Rendering Index (CRI)	>83
Efficacy	142 lm/W
Visible Light Area	360º

SPECTRAL DISTRIBUTION

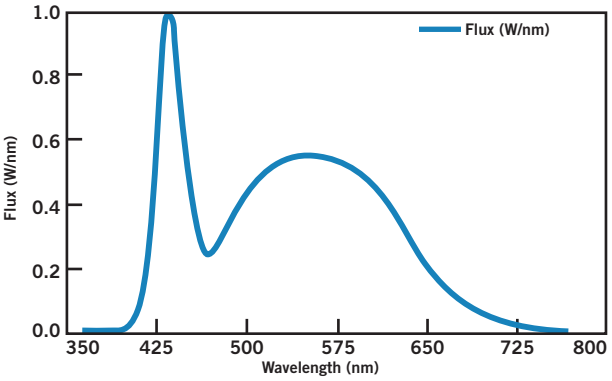

LUX DISTANCE CURVE

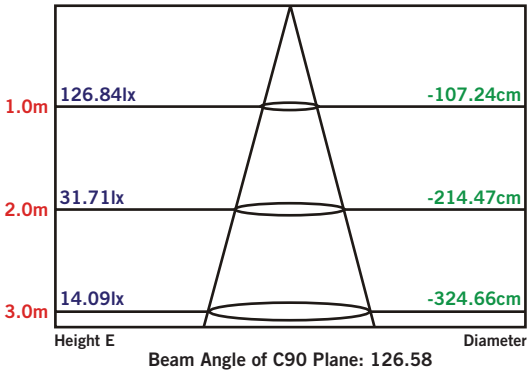

Beam Angle of C90 Plane: 126.58

Keystone Technologies • 1390 Welsh Road, North Wales, PA 19454 • Phone (800) 464-2680 • Fax (888) 966-0556 • **www.keystonelamp.com**

Specifications subject to change. Last revised on 7.7.16

KT-LED27HID-E26-850-D

HID REPLACEMENT LED LAMP

WIRING DIAGRAM

STEP 1
Disconnect power. Disconnect and remove existing ballast, capacitor, and/or ignitor (where applicable) from fixture.

STEP 2
Rewire for line voltage to the lamp socket.

STEP 3
Install new LED replacement lamp. Ensure lamp is operating properly when power is turned on.

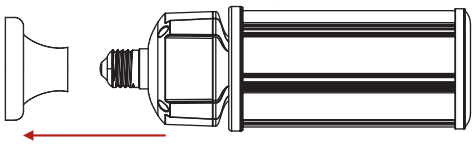

FIGURE 1

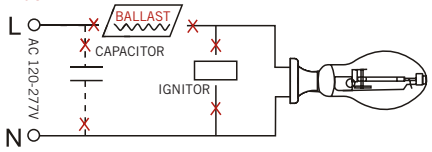

FIGURE 2

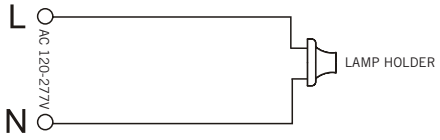

FIGURE 3

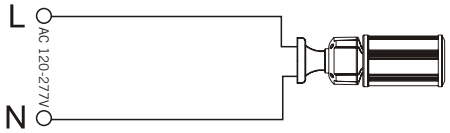

PHYSICAL CHARACTERISTICS

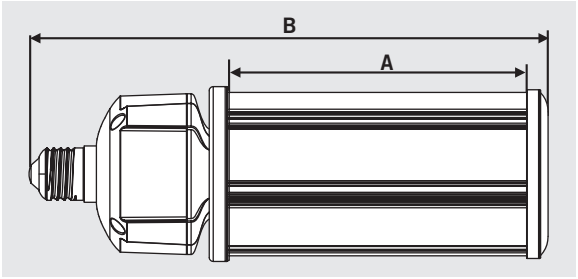

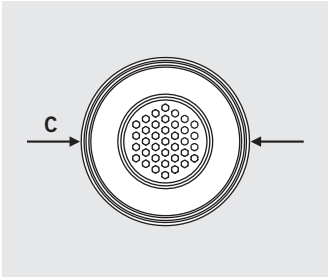

LAMP DIMENSIONS

A (Illuminated Length)	3.62"
B (Body Length)	7.95"
C (Diameter)	3.43"

BASE TYPE: E26 (Medium)

ORDERING INFORMATION

ORDER CODE	PACKAGING STYLE	PACK QTY.	ITEM STATUS
KT-LED27HID-E26-850-D-DP	Distributor Pack (Individual Cartons)	16	Quick Ship

CATALOG NUMBER BREAKDOWN

KT-LED27HID-E26-850-D-DP

KT	LED27	HID	E26	850	D	DP
Keystone Technologies	LED Lamp	Wattage	Lamp Type	Base Type	800 Series	Color Temp.	Direct Drive Series	Packaging Style

KT-LED36HID-EX39-850-D

HID REPLACEMENT LED LAMP

DESCRIPTION

36W HID Replacement LED Lamp | 5000K | >83 CRI | IP64 Rated

- **LAMP TYPE:** HID Replacement LED
- **BASE TYPE:** EX39 (Mogul)
- **WATTAGE:** 36W
- **COLOR TEMPERATURE:** 5000K
- **METAL HALIDE EQUIVALENT:** 150W
- **COLOR RENDERING INDEX (CRI):** >83
- **WARRANTY:** 5 Years



PRODUCT FEATURES

- Replacement for Conventional Metal Halide Lamp
- Listed on DLC Qualified Product List
- Non-Dimmable; Do Not Dim
- 50,000+ Hour Lifetime
- Environmentally Friendly: No Mercury Used
- Instant Startup
- UL Listed
- Operating Temperature: -29ºC/-20ºF to 60ºC/140ºF
- Integral Driver, Eliminates the Need for External Driver or Ballast; Includes 4kV Surge Protection
- IP64 Rated; Integrated Heat Sink Quickly Dissipates Heat and Guides Water Intrusion Out of the Lamp

OPERATING SPECIFICATIONS

ELECTRICAL CHARACTERISTICS

Input Voltage	Power Consumption	Power Factor	Input Current
120-277Vac	36W	>0.9	0.32A @ 120V 0.14A @ 277V

RATED LIFE

L70 (Hours)	50,000

PHOTOMETRIC CHARACTERISTICS

Color Temperature (CCT)	5000K
Luminous Flux	5100 lm
Color Rendering Index (CRI)	>83
Efficacy	142 lm/W
Visible Light Area	360º

SPECTRAL DISTRIBUTION

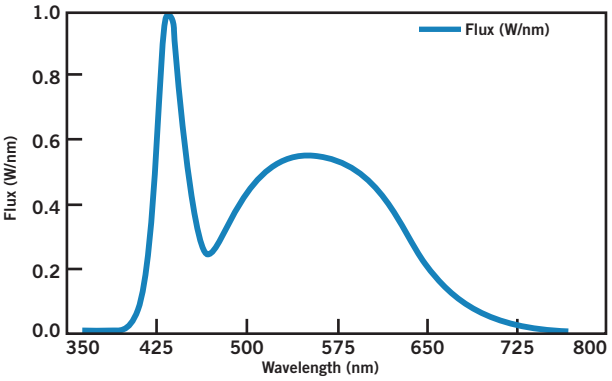

LUX DISTANCE CURVE

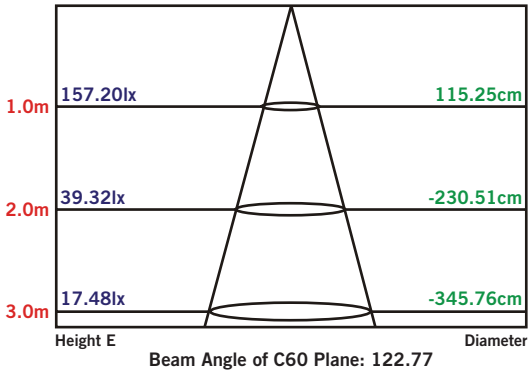

Beam Angle of C60 Plane: 122.77

Keystone Technologies • 1390 Welsh Road, North Wales, PA 19454 • Phone (800) 464-2680 • Fax (888) 966-0556 • **www.keystonelamp.com**

Specifications subject to change. Last revised on 9.16.16

KT-LED36HID-EX39-850-D

HID REPLACEMENT LED LAMP

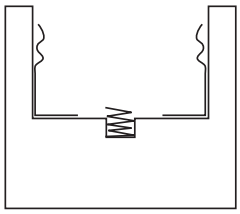

E39 MOGUL SOCKET

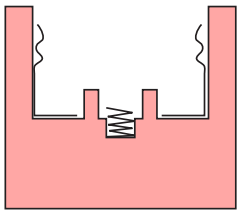

EX39 MOGUL SOCKET

EX39-based lamps will work in both E39 and EX39 sockets.

WIRING DIAGRAM

STEP 1
Disconnect power. Disconnect and remove existing ballast, capacitor, and/or ignitor (where applicable) from fixture.

STEP 2
Rewire for line voltage to the lamp socket.

STEP 3
Install new LED replacement lamp. Ensure lamp is operating properly when power is turned on.

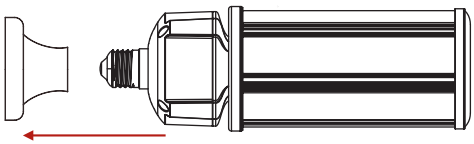

FIGURE 1

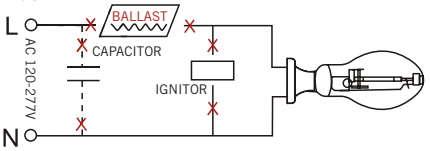

FIGURE 2

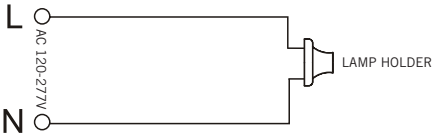

FIGURE 3

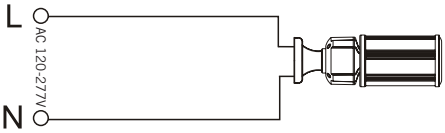

PHYSICAL CHARACTERISTICS

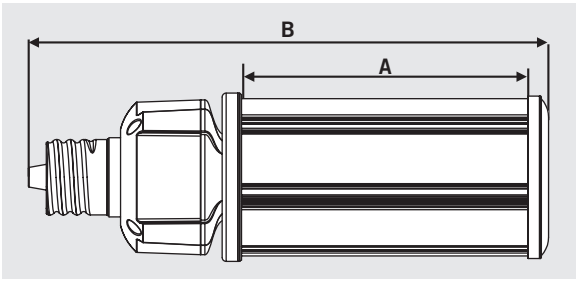

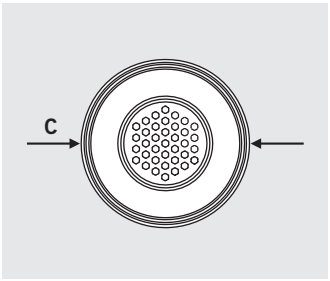

LAMP DIMENSIONS

A (Illuminated Length)	4.65"
B (Body Length)	9.38"
C (Diameter)	3.43"

BASE TYPE: EX39 (Mogul)

ORDERING INFORMATION

ORDER CODE	PACKAGING STYLE	PACK QTY.	ITEM STATUS
KT-LED36HID-EX39-850-D-DP	Distributor Pack (Individual Cartons)	16	Quick Ship

CATALOG NUMBER BREAKDOWN

KT-LED36HID-EX39-850-D-DP

KT	LED36	HID	EX39	850	D	DP
Keystone Technologies	LED Lamp	Wattage	Lamp Type	Base Type	800 Series	Color Temp.	Direct Drive Series	Packaging Style

Elite 7W 12V MR16

The same performance that you have come to expect in TCP PAR lamps, can now be found in our LED MR16s—the perfect replacement for 50 watt halogen.



Limitless options for the following applications:

- Track Lights
- Recessed Downlights
- Display Lights
- Outdoor Fixtures (that protect from the elements)

Great features and benefits:

- Energy Efficient: 80% more efficient than halogen
- Replaces 50W halogen
- Excellent CBCP and beam quality
- Long life: 25,000 hours (lasts at least 12 times longer than halogen)
- ROI < 1 year
- Excellent color consistency and high color rendering (CRI)
- Smooth, uniform dimming



7W 12V MR16

TCP®
325 Campus Dr. | Aurora, Ohio 44202 | P: 800-324-1496 | tcpi.com
©TCP FEB 2017/WF39351

ENERGY STAR PARTNER

ELITE Series — LED Dimmable 7W 12V MR16 Lamp

LED Dimmable MR16	25,000 hours average rated life, 12 volts

Catalog Number

Notes | Type



Applications:

Ideal for dimmable MR16 flood and spot applications.

- ✚ Track Lights
- ✚ Recessed Downlights
- ✚ Display Lights
- ✚ Outdoor Fixtures that protect lamps from the elements

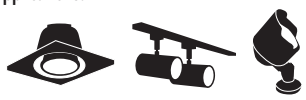

Features	Benefits
High lumen output	Replaces 50W halogen MR16
Up to 85% less energy than halogen alternatives	Instant energy savings
Smooth, uniform dimming	Set the perfect mood & atmosphere
Long life	Minimizes replacement and maintenance costs
Very low heat generation	Perfect for sensitive display lighting such as art galleries
Excellent color consistency and CRI	Enhances colors of focal point while maintaining uniformity throughout lighting installation from lamp to lamp
Light weight	Track or downlight installations are not strained by excess weight
Shatter resistant	Lower the risk of injury and breakage

Specifications

Input Line Voltage: 12V
Input Power 7W
Input Line Frequency 50/60HZ
Lamp Life (Rated) ..... 25,000 hrs
Minimum Starting Temp ..... -30ºC
Maximum Operating Temp 40ºC
CCT 24K, 27K, 30K, 41K
CRI/High CRI 80/90
Beam Angles ..... 20 & 40



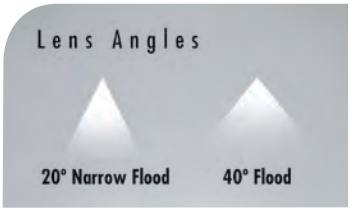

Warranties and Certifications:

3 YEAR WARRANTY*

c UL us LISTED

Item #	Description	Voltage	Wattage	Replacement	Lumens	LPW	CBCP est.	Beam Angle	CCT	CRI	M.O.L. (inches)	Diameter (inches)	Case Quantity
50W Elite Value MR16													
LED712VMR16V24KNFL	Dimmable 7W 12V MR16 - 2400K, 20°	12	7	50	450	64.3	2802	20°	2400K	80	2	2	12
LED712VMR16V24KFL	Dimmable 7W 12V MR16 - 2400K, 40°	12	7	50	450	64.3	898	40°	2400K	80	2	2	12
LED712VMR16V27KNFL	Dimmable 7W 12V MR16 - 2700K, 20°	12	7	50	450	64.3	4579	20°	2700K	80	2	2	12
LED712VMR16V27KFL	Dimmable 7W 12V MR16 - 2700K, 40°	12	7	50	480	68.6	1369	40°	2700K	80	2	2	12
LED712VMR16V30KNFL	Dimmable 7W 12V MR16 - 3000K, 20°	12	7	50	470	67.1	4093	20°	3000K	80	2	2	12
LED712VMR16V30KFL	Dimmable 7W 12V MR16 - 3000K, 40°	12	7	50	500	71.4	1211	40°	3000K	80	2	2	12
LED712VMR16V41KNFL	Dimmable 7W 12V MR16 - 4100K, 20°	12	7	50	525	75.0	4381	20°	4100K	80	2	2	12
LED712VMR16V41KFL	Dimmable 7W 12V MR16 - 4100K, 40°	12	7	50	525	75.0	1138	40°	4100K	80	2	2	12
50W Elite MR16													
LED712VMR16824KNFL	Dimmable 7W 12V MR16 - 2400K, 20°	12	7	50	450	64.3	2802	20°	2400K	80	2	2	12
LED712VMR16824KFL	Dimmable 7W 12V MR16 - 2400K, 40°	12	7	50	450	64.3	898	40°	2400K	80	2	2	12
LED712VMR16827KNFL	Dimmable 7W 12V MR16 - 2700K, 20°	12	7	50	500	71.4	4042	20°	2700K	80	2	2	12
LED712VMR16827KFL	Dimmable 7W 12V MR16 - 2700K, 40°	12	7	50	500	71.4	1266	40°	2700K	80	2	2	12
LED712VMR16830KNFL	Dimmable 7W 12V MR16 - 3000K, 20°	12	7	50	500	71.4	3095	20°	3000K	80	2	2	12
LED712VMR16830KFL	Dimmable 7W 12V MR16 - 3000K, 40°	12	7	50	500	71.4	1151	40°	3000K	80	2	2	12
LED712VMR16841KNFL	Dimmable 7W 12V MR16 - 4100K, 20°	12	7	50	525	75.0	3440	20°	4100K	80	2	2	12
LED712VMR16841KFL	Dimmable 7W 12V MR16 - 4100K, 40°	12	7	50	525	75.0	1291	40°	4100K	80	2	2	12
50W Designer Elite High CRI MR16													
LED712VMR16927KNFL	Dimmable 7W 12V MR16 - 2700K, 20°, 9050	12	7	50	425	60.7	2802	20°	2700K	90	2	2	12
LED712VMR16927KFL	Dimmable 7W 12V MR16 - 2700K, 40°, 9050	12	7	50	425	60.7	994	40°	2700K	90	2	2	12
LED712VMR16927KNFLB	Dimmable 7W 12V MR16 - 2700K, 20°, 9050, Black	12	7	50	425	60.7	2802	20°	2700K	90	2	2	12
LED712VMR16927KFLB	Dimmable 7W 12V MR16 - 2700K, 40°, 9050, Black	12	7	50	425	60.7	994	40°	2700K	90	2	2	12
LED712VMR16930KNFL	Dimmable 7W 12V MR16 - 3000K, 20°, 9050	12	7	50	425	60.7	2802	20°	3000K	90	2	2	12
LED712VMR16930KFL	Dimmable 7W 12V MR16 - 3000K, 40°, 9050	12	7	50	425	65.3	902	40°	3000K	90	2	2	12
LED712VMR16941KNFL	Dimmable 7W 12V MR16 - 4100K, 20°, 9050	12	7	50	445	63.8	2802	20°	4100K	90	2	2	12
LED712VMR16941KFL	Dimmable 7W 12V MR16 - 4100K, 40°, 9050	12	7	50	445	63.8	898	40°	4100K	90	2	2	12

For the most up-to-date specs, please visit www.tcpi.com

* Based on 12 hours use per day

TCP®
325 Campus Dr. | Aurora, Ohio 44202 | P: 1-800-324-1496 | tcpi.com

©TCP FEB 2017/WF39351

ENERGY STAR PARTNER

Elite LED BR Series

TCP's Elite series LED BR Lamps combine the long life and energy savings of LED technology with the look and feel of a traditional halogen lamp.



Limitless options for the following applications:

- Recessed Downlights
- Track Lights
- Display Lights
- Outdoor Fixtures that Protect Lamps from the Elements

Great features and benefits:

- Energy Efficient: 80% more efficient than incandescent
- Smooth, uniform dimming; also available as non-dimming
- Long Life: 25,000 hours
- 85W, 65W, 60W and 50W replacements
- Smooth outer housing
- Excellent color consistency and high color rendering (CRI)
- Available in 2400K, 2700K, 3000K, 4100K and 5000K



BR40 BR30 R20

TCP®
325 Campus Dr. | Aurora, Ohio 44202 | P: 800-324-1496 | tcpi.com
©TCP AUG 2017/WF63250

ENERGY STAR PARTNER

ELITE Series

LED BR40, BR30 and R20 Lamps

LED	25,000 Hours average rated life, 120 Volts

Catalog Number	
Notes	Type



Applications:

Ideal for BR40, BR30, AND R20 flood and spot light applications.

- ✚ Recessed Downlights
- ✚ Track Lights
- ✚ Display Lights
- ✚ Outdoor Fixtures that Protect Lamps from the Elements



Features	Benefits
Up to 85% less energy than halogen alternatives	Instant energy savings
Long life	Minimizes replacement and maintenance costs
Smooth, clean outside housing	Seemlessly blends into lighting applications
Very low heat generation	Perfect for sensitive display lighting such as art galleries
Excellent Color Consistency and CRI	Enhances colors of focal point while maintaining uniformity throughout lighting installation from lamp to lamp
Low weight	Track or down light installations are not strained by excess weight
UL approved for damp location	Can be used outdoors when protected from elements. Withstands humidity indoors/outdoors
Shatter resistant	Lower the risk of injury and breakage
Rated for totally enclosed fixtures	Can be used indoors or outdoors in enclosed fixtures

Specifications

Input Line Voltage:	120 VAC
Input Power	See Chart
Input Line Frequency	50/60HZ
Lamp Life (Rated)	25,000 hrs
Minimum Starting Temp	-30ºC
Maximum Operating Temp	40ºC
CRI	80

Replacements

17W BR40	=	85W
12W BR40/30	=	65W
9W BR30	=	65W
10W R20	=	60W
7W R20	=	50W



BR40



BR30



R20



c UL us 5 YEAR WARRANTY*

*Based on 12 hours use per day

TCP®
325 Campus Dr. | Aurora, Ohio 44202 | P: 1-800-324-1496 | tcpi.com

©TCP OCT 2017/WF95683

For the most up-to-date specs, please visit www.tcpi.com

TCP **ELITE Series** LED Dimmable BR40, BR30 and R20 Lamps

Smooth Uniform Dimming

Lamp Type		Item #	Description	Voltage	Wattage	Lumens	LPW	M.O.L. (inches)	Diameter (inches)	CCT	CRI	Case Quantity
BR40	17W	LED17BR40D24K	Dimmable 17W Smooth BR40 - 2400K	120	17	960	56.5	6.0	5.0	2400K	80	12
		LED17BR40D27K	Dimmable 17W Smooth BR40 - 2700K	120	17	1200	70.6	6.0	5.0	2700K	80	12
		LED17BR40D30K	Dimmable 17W Smooth BR40 - 3000K	120	17	1250	73.5	6.0	5.0	3000K	80	12
		LED17BR40D41K	Dimmable 17W Smooth BR40 - 4100K	120	17	1300	76.5	6.0	5.0	4100K	80	12
		LED17BR40D50K	Dimmable 17W Smooth BR40 - 5000K	120	17	1350	79.4	6.0	5.0	5000K	80	12
	12W	LED12BR40D24K	Dimmable 12W Smooth BR40 - 2400K	120	12	680	56.7	6.0	5.0	2400K	80	12
		LED12BR40D27K	Dimmable 12W Smooth BR40 - 2700K	120	12	840	70.0	6.0	5.0	2700K	80	12
		LED12BR40D30K	Dimmable 12W Smooth BR40 - 3000K	120	12	850	70.8	6.0	5.0	3000K	80	12
		LED12BR40D41K	Dimmable 12W Smooth BR40 - 4100K	120	12	875	72.9	6.0	5.0	4100K	80	12
		LED12BR40D50K	Dimmable 12W Smooth BR40 - 5000K	120	12	950	79.2	6.0	5.0	5000K	80	12
BR30	12W	LED12BR30D24K	Dimmable 12W Smooth BR30 - 2400K	120	12	680	56.7	5.4	3.8	2400K	80	12
		LED12BR30D27K	Dimmable 12W Smooth BR30 - 2700K	120	12	850	70.8	5.4	3.8	2700K	80	12
		LED12BR30D30K	Dimmable 12W Smooth BR30 - 3000K	120	12	875	72.9	5.4	3.8	3000K	80	12
		LED12BR30D41K	Dimmable 12W Smooth BR30 - 4100K	120	12	900	75.0	5.4	3.8	4100K	80	12
		LED12BR30D50K	Dimmable 12W Smooth BR30 - 5000K	120	12	950	75.0	5.4	3.8	5000K	80	12
	9W	LED9BR30D24K	Dimmable 9W Smooth BR30 - 2400K	120	9	600	66.7	5.4	3.8	2400K	80	12
		LED9BR30D27K	Dimmable 9W Smooth BR30 - 2700K	120	9	700	77.8	5.4	3.8	2700K	80	12
		LED9BR30D30K	Dimmable 9W Smooth BR30 - 3000K	120	9	720	80.0	5.4	3.8	3000K	80	12
		LED9BR30D41K	Dimmable 9W Smooth BR30 - 4100K	120	9	740	80.2	5.4	3.8	4100K	80	12
		LED9BR30D50K	Dimmable 9W Smooth BR30 - 5000K	120	9	775	86.1	5.4	3.8	5000K	80	12
R20	10W	LED10R20D24K	Dimmable 10W Smooth R20 - 2400K	120	10	520	52.0	3.5	2.5	2400K	80	12
		LED10R20D27K	Dimmable 10W Smooth R20 - 2700K	120	10	660	66.0	3.5	2.5	2700K	80	12
		LED10R20D30K	Dimmable 10W Smooth R20 - 3000K	120	10	700	70.0	3.5	2.5	3000K	80	12
		LED10R20D41K	Dimmable 10W Smooth R20 - 4100K	120	10	725	72.5	3.5	2.5	4100K	80	12
		LED10R20D50K	Dimmable 10W Smooth R20 - 5000K	120	10	750	75.0	3.5	2.5	5000K	80	12
	7W	L7R20D2524K	Dimmable 7W Smooth R20 - 2400K	120	7	400	57.1	3.5	2.5	2400K	80	12
		L7R20D2527K	Dimmable 7W Smooth R20 - 2700K	120	7	575	82.1	3.5	2.5	2700K	80	12
		L7R20D2530K	Dimmable 7W Smooth R20 - 3000K	120	7	600	85.7	3.5	2.5	3000K	80	12
		L7R20D2541K	Dimmable 7W Smooth R20 - 4100K	120	7	625	89.3	3.5	2.5	4100K	80	12
		L7R20D2550K	Dimmable 7W Smooth R20 - 5000K	120	7	650	92.9	3.5	2.5	5000K	80	12







c UL us

5 YEAR WARRANTY*

*Based on 12 hours use per day

TCP®
325 Campus Dr. | Aurora, Ohio 44202 | P: 1-800-324-1496 | tcpi.com

©TCP OCT 2017/WF95683b

For the most up-to-date specs, please visit www.tcpi.com

TCP *ELITE Series* LED Non-Dimmable BR40, BR30 and R20 Lamps

Lamp Type		Item #	Description	Voltage	Wattage	Lumens	LPW	M.O.L. (inches)	Diameter (inches)	CCT	CRI	Case Quantity
BR40	17W	LED17BR4027K	Non-Dimmable 17W Smooth BR40 - 2700K	120	17	1200	70.6	6.0	5.0	2700K	80	12
		LED17BR4030K	Non-Dimmable 17W Smooth BR40 - 3000K	120	17	1250	73.5	6.0	5.0	3000K	80	12
		LED17BR4041K	Non-Dimmable 17W Smooth BR40- 4100K	120	17	1300	76.5	6.0	5.0	4100K	80	12
	12W	LED12BR4024K	Non-Dimmable 12W Smooth BR40 - 2400K	120	12	680	56.7	6.0	5.0	2400K	80	12
		LED12BR4027K	Non-Dimmable 12W Smooth BR40 - 2700K	120	12	850	70.8	6.0	5.0	2700K	80	12
		LED12BR4030K	Non-Dimmable 12W Smooth BR40 - 3000K	120	12	875	72.9	6.0	5.0	3000K	80	12
		LED12BR4041K	Non-Dimmable 12W Smooth BR40 - 4100K	120	12	900	75.0	6.0	5.0	4100K	80	12
BR30	12W	LED12BR3024K	Non-Dimmable 12W Smooth BR30 - 2400K	120	12	680	56.7	5.4	3.8	2400K	80	12
		LED12BR3027K	Non-Dimmable 12W Smooth BR30 - 2700K	120	12	850	70.8	5.4	3.8	2700K	80	12
		LED12BR3030K	Non-Dimmable 12W Smooth BR30 - 3000K	120	12	875	72.9	5.4	3.8	3000K	80	12
		LED12BR3041K	Non-Dimmable 12W Smooth BR30 - 4100K	120	12	900	75.0	5.4	3.8	4100K	80	12
	10W	LED10BR3024K	Non-Dimmable 10W Smooth BR30 - 2400K	120	9	520	57.8	5.4	3.8	2400K	80	12
		LED10BR3027K	Non-Dimmable 10W Smooth BR30 - 2700K	120	9	650	72.2	5.4	3.8	2700K	80	12
		LED10BR3030K	Non-Dimmable 10W Smooth BR30 - 3000K	120	9	675	75.0	5.4	3.8	3000K	80	12
		LED10BR3041K	Non-Dimmable 10W Smooth BR30 - 4100K	120	9	700	77.8	5.4	3.8	4100K	80	12
		LED10BR3050K	Non-Dimmable 10W Smooth BR30 - 5000K	120	9	725	80.6	5.4	3.8	5000K	80	12
R20	10W	LED10R2024K	Non-Dimmable 10W Smooth R20 - 2400K	120	10	520	52.0	3.5	2.5	2400K	80	12
		LED10R2027K	Non-Dimmable 10W Smooth R20 - 2700K	120	10	700	70.0	3.5	2.5	2700K	80	12
		LED10R2030K	Non-Dimmable 10W Smooth R20 - 3000K	120	10	725	72.5	3.5	2.5	3000K	80	12
		LED10R2041K	Non-Dimmable 10W Smooth R20 - 4100K	120	10	750	75.0	3.5	2.5	4100K	80	12
	9W	LED8R2027K	Non-Dimmable 9W Smooth R20 - 2700K	120	9	575	63.9	3.5	2.5	2700K	80	12
		LED8R2030K	Non-Dimmable 9W Smooth R20 - 3000K	120	9	600	66.7	3.5	2.5	3000K	80	12
		LED8R2041K	Non-Dimmable 9W Smooth R20 - 4100K	120	9	625	69.4	3.5	2.5	4100K	80	12

c UL us

5 YEAR WARRANTY*

*Based on 12 hours use per day

TCP®
325 Campus Dr. | Aurora, Ohio 44202 | P: 1-800-324-1496 | tcpi.com

©TCP OCT 2017/WF95683c

For the most up-to-date specs, please visit www.tcpi.com

Elite LED Deco Lamps

TCP Elite Decorative lamps closely mimic the look and feel of incandescent but last much longer.

Limitless options for the following applications:

- Accent and decorative lighting
- Chandeliers
- Ceiling fans
- Indoor/outdoor fixtures

Great features and benefits:

- Energy efficient: 80% energy savings
- Replaces 25W and 40W incandescent lamps
- Smooth, uniform dimming—perfect for chandeliers
- Long life: 25,000 hours
- Excellent color consistency and high color rendering (CRI)
- UL damp location rated—excellent for use in outdoor applications



Candelabra G16 Globe* Frosted and Clear

Candelabra Blunt Tip* Frosted and Clear

Candelabra Flame Tip* Clear

* Also available in an E26 base (frosted and clear)



TCP®
325 Campus Dr. | Aurora, Ohio 44202 | P: 800-324-1496 | tcpi.com
©TCP DEC 2017 / WF76202

ENERGY STAR PARTNER

LED ELITE Series LED Dimmable Decorative Series Specifications

LED	25,000 hours average rated life, 120 volts

Catalog Number	
Notes	Type



Applications

Ideal for decorative dimming applications. Suitable for outdoor fixtures.
Also perfect for applications with hard to reach areas, vibration, and frequent starts.

Accent and decorative lighting including:

- ✚ Chandeliers
- ✚ Ceiling Fans
- ✚ Decorative
- ✚ Indoor Fixtures
- ✚ Outdoor Fixtures
- ✚ Wall Sconces

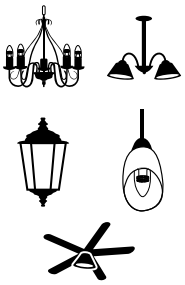

Light output equivalency:
5w = 40w
4w = 25w

Features and Benefits

- Long life: 25,000 hours—no more bulb replacements
- Fully dimmable, brilliant LED light
- Excellent white color consistency from bulb to bulb
- UL approved for dry and damp locations
- Available in E12 and E26 base

** Three or more lamps per dimming circuit is recommended for optimal dimming*

Specifications (at full brightness)

Input Line Voltage:	120VAC
Input Line Frequency	60HZ
Lamp Life (Rated)	25,000 hrs
Minimum Starting Temp	-30ºC
Maximum Operating Temp	40ºC
UL/cUL Listed	Yes
Power Factor	92%
CRI	80

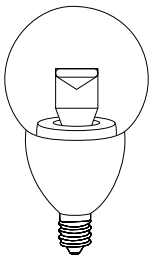

LED5E12G1627K
LED4E12G1627K

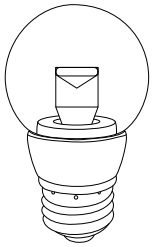

LED5E26G1627K
LED4E26G1627K

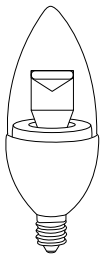

LED5E12B1127K
LED5E12B1130K
LED5E12B1150K
LED4E12B1124K
LED4E12B1127K
LED4E12B1150K

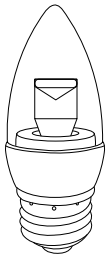

LED5E26B1127K
LED5E26B1130K
LED4E26B1124K
LED4E26B1127K



LED5E12F1127K
LED4E12F1127K

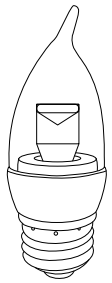

LED5E26F1127K
LED4E26F1127K

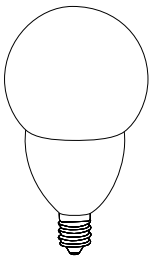

LED5E12G1627KF
LED4E12G1627KF

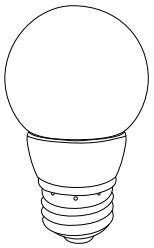

LED5E26G1627KF
LED4E26G1627KF

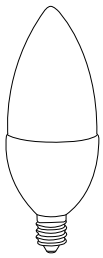

LED5E12B1127KF
LED5E12B1150KF
LED4E12B1127KF

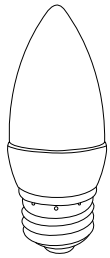

LED5E26B1127KF
LED4E26B1127KF

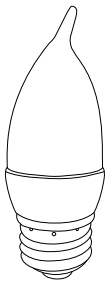

LED5E26F1127KF
LED4E26F1127KF

c UL us

5 YEAR WARRANTY

RoHS COMPLIANCE

For the most up-to-date specs, please visit www.tcpi.com

TCP®
325 Campus Dr. | Aurora, Ohio 44202 | P: 1-800-324-1496 | tcpi.com

©TCP DEC 2017/WF76202a

LED ELITE Series LED Dimmable Decorative Series Specifications

Warranties and Certifications:

c UL us

5 YEAR WARRANTY

RoHS COMPLIANT

Item #	Description	Voltage	Wattage	Wattage Equivalent	M.O.L. (inches)	Diameter (inches)	Lumens	LPW	CCT	CRI
5W Decorative Lamps										
LED5E12G1627K	LED 5W DIMMABLE CANDELABRA G16 GLOBE - 2700K	120	5.0	40W	3.5	2.0	350	70	2700K	80
LED5E26G1627K	LED 5W DIMMABLE G16 GLOBE - 2700K	120	5.0	40W	3.5	2.0	350	70	2700K	80
LED5E12G1627KF	LED 5W DIMMABLE CANDELABRA FROSTED G16 GLOBE - 2700K	120	5.0	40W	3.5	2.0	350	70	2700K	80
LED5E26G1627KF	LED 5W DIMMABLE FROSTED G16 GLOBE - 2700K	120	5.0	40W	3.5	2.0	350	70	2700K	80
LED5E12B1127K	LED 5W DIMMABLE CANDELABRA BLUNT TIP - 2700K	120	5.0	40W	3.8	1.4	350	70	2700K	80
LED5E12B1130K	LED 5W DIMMABLE CANDELABRA BLUNT TIP - 3000K	120	5.0	40W	3.8	1.4	375	75	3000K	80
LED5E12B1150K	LED 5W DIMMABLE CANDELABRA BLUNT TIP - 5000K	120	5.0	40W	3.8	1.4	400	80	5000K	80
LED5E26B1127K	LED 5W DIMMABLE BLUNT TIP - 2700K	120	5.0	40W	3.8	1.4	350	70	2700K	80
LED5E26B1130K	LED 5W DIMMABLE BLUNT TIP - 3000K	120	5.0	40W	3.8	1.4	375	75	3000K	80
LED5E12B1127KF	LED 5W DIMMABLE CANDELABRA FROSTED BLUNT TIP - 2700K	120	5.0	40W	3.8	1.4	350	70	2700K	80
LED5E12B1150KF	LED 5W DIMMABLE CANDELABRA FROSTED BLUNT TIP - 5000K	120	5.0	40W	3.8	1.4	400	80	5000K	80
LED5E26B1127KF	LED 5W DIMMABLE FROSTED BLUNT TIP - 2700K	120	5.0	40W	3.8	1.4	350	70	2700K	80
LED5E12F1127K	LED 5W DIMMABLE CANDELABRA FLAME TIP - 2700K	120	5.0	40W	3.8	1.4	350	70	2700K	80
LED5E26F1127K	LED 5W DIMMABLE FLAME TIP - 2700K	120	5.0	40W	3.8	1.4	350	70	2700K	80
LED5E26F1127KF	LED 5W DIMMABLE FROSTED FLAME TIP - 2700K	120	5.0	40W	3.8	1.4	350	70	2700K	80
4W Decorative Lamps										
LED4E12G1627K	LED 4W DIMMABLE CANDELABRA G16 GLOBE - 2700K	120	4.0	25W	3.5	2.0	280	70	2700K	80
LED4E26G1627K	LED 4W DIMMABLE G16 GLOBE - 2700K	120	4.0	25W	3.5	2.0	280	70	2700K	80
LED4E12G1627KF	LED 4W DIMMABLE CANDELABRA FROSTED G16 GLOBE - 2700K	120	4.0	25W	3.5	2.0	280	70	2700K	80
LED4E26G1627KF	LED 4W DIMMABLE FROSTED G16 GLOBE - 2700K	120	4.0	25W	3.5	2.0	280	70	2700K	80
LED4E12B1124K	LED 4W DIMMABLE CANDELABRA BLUNT TIP - 2400K	120	4.0	25W	3.8	1.4	200	50	2400K	80
LED4E12B1127K	LED 4W DIMMABLE CANDELABRA BLUNT TIP - 2700K	120	4.0	25W	3.8	1.4	260	65	2700K	80
LED4E12B1150K	LED 4W DIMMABLE CANDELABRA BLUNT TIP - 5000K	120	4.0	25W	3.8	1.4	280	70	5000K	80
LED4E26B1124K	LED 4W DIMMABLE BLUNT TIP - 2400K	120	4.0	25W	3.8	1.4	200	50	2400K	80
LED4E26B1127K	LED 4W DIMMABLE BLUNT TIP - 2700K	120	4.0	25W	3.8	1.4	260	65	2700K	80
LED4E12B1127KF	LED 4W DIMMABLE CANDELABRA FROSTED BLUNT TIP - 2700K	120	4.0	25W	3.8	1.4	260	65	2700K	80
LED4E26B1127KF	LED 4W DIMMABLE FROSTED BLUNT TIP - 2700K	120	4.0	25W	3.8	1.4	260	65	2700K	80
LED4E12F1127K	LED 4W DIMMABLE CANDELABRA FLAME TIP - 2700K	120	4.0	25W	3.8	1.4	260	65	2700K	80
LED4E26F1127K	LED 4W DIMMABLE FLAME TIP - 2700K	120	4.0	25W	3.8	1.4	260	65	2700K	80
LED4E26F1127KF	LED 4W DIMMABLE FROSTED FLAME TIP - 2700K	120	4.0	25W	3.8	1.4	260	65	2700K	80

For the most up-to-date specs, please visit www.tcpi.com

TCP®
325 Campus Dr. | Aurora, Ohio 44202 | P: 1-800-324-1496 | tcpi.com
©TCP DEC 2017/WF76202b

CREATING BEAUTY

TCP has a 20-year history in energy-efficient lighting. Thanks to our cutting edge technology and manufacturing expertise, we have shipped billions of high quality lamps. Our integrated technology and manufacturing provides expedited time-to-market. With TCP, you can count on unique lighting products designed to meet very specific needs—lighting that transforms your surroundings and envelopes you in warmth—lighting that generates beauty with every flip of the switch.

LED

For more information on the quality and care TCP can deliver, call us at 800.324.1496 or visit tcpi.com

325 Campus Dr. | Aurora, Ohio 44202 | P: 800.324.1496 | F: 877.487.0516

LITHONIA LIGHTING®

Catalog Number	
Notes	
Type	

FEATURES & SPECIFICATIONS

INTENDED USE

Suitable for emergency lighting applications such as stairways and hallways.

CONSTRUCTION

Injection-molded, flame-retardant, high-impact, thermoplastic housing with snap-fit design components with LED lamps for easy installation. Universal J-box pattern. Track and swivel arrangement permits full range of lamp adjustment.

OPTICS

The typical life of the LED is 10 years. Two 1W LED lamps for emergency light.

ELECTRICAL

Dual-voltage input 120V or 277V AC. Emergency unit provided with test switch, status indicator and rechargeable battery. Maintenance-free nickel-cadmium battery provides 90 minutes of emergency power.

Optional high-output battery to power both local and optional LED remote lamp heads simultaneously. The HO option provides additional 3W of LED remote capacity (up to 2 LED remote heads).

LISTINGS

UL Listed. Meets UL 924, NFPA 101, NFPA 70-NEC and OSHA illumination standards. Damp location 32°F to 122°F (0°C to 50°C) listed standard.

WARRANTY

2-year limited warranty. Complete warranty terms located at:
www.acuitybrands.com/CustomerResources/Terms_and_conditions.aspx

All life safety equipment, including emergency lighting for path of egress must be maintained, serviced, and tested in accordance with all National Fire Protection Association (NFPA) and local codes. Failure to perform the required maintenance, service, or testing could jeopardize the safety of occupants and will void all warranties.

NOTE: Actual performance may differ as a result of end-user environment and application.

All values are design or typical values, measured under laboratory conditions at 25 °C.

Specifications subject to change without notice.

Contractor Select

LED UNITS



LED Lamps

LED

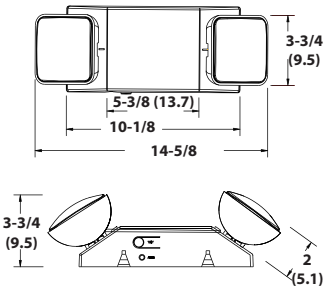

Weight: 4 lbs. (1.82 kgs.).

All dimensions are inches (centimeters) unless otherwise indicated.
Photometry/Design Tools

ORDERING INFORMATION All configurations of this product are considered "standard" and have short lead times.

Catalog Number	UPC	Description	Supply Voltage	Input Wattage[2]	Standard Pallet Qty.	Carton Qty.
EU2 LED M12[1]	784231874493	Emergency lighting unit	120/277	1.8	324	12
EU2 LED HO M6	888791131215	Emergency lighting unit high output option	120/277	2.1	324	6

Accessories: *Order as separate items.*

ELA WG1	Wireguard (back mount only)[3]
ELA Q L0304	Single LED indoor remote head, white, 1.5W, 3.6V[4]
ELA T Q L0304	Twin LED indoor remote head, white, 3W, 3.6V[4]
ELA QWP L0304	Single LED weather-proof remote head, gray, 1.5W, 3.6V[4]
ELA T QWP L0304	Twin LED weather-proof remote head, gray, 1.5W, 3.6V[4]

Notes:

1. See T20C compliance product list. Only available with EU2 LED M12.
2. Per lamp head.
3. See spec sheet ELA-WG.
4. Available with HO option only.

© 2011-2017 Acuity Brands Lighting, Inc. All rights reserved.

RAIL150NW/D10



LED High Bay fixture ideal for large indoor spaces, including warehouses, gymnasiums and distribution centers that require mounting heights from 35 feet.

Color: White Weight: 15.6 lbs

Project:	Type:
Prepared By:	Date:

Driver Info		LED Info	
Type:	Constant Current	Watts:	150W
120V:	1.12A	Color Temp:	4000K
208V:	0.70A	Color Accuracy:	77 CRI
240V:	0.60A	L70 Lifespan:	100000
277V:	0.51A	Lumens:	17812
Input Watts:	132W	Efficacy:	135 LPW
Efficiency:	N/A		

Technical Specifications

Listings

UL Listing:

Suitable for damp locations

DLC Listed:

This product is listed by Design Lights Consortium (DLC) as an ultra-efficient premium product that qualifies for the highest tier of rebates from DLC Member Utilities.
DLC Product Code: P9KAZJ2D

IESNA LM-79 & LM-80 Testing:

RAB LED luminaires have been tested by an independent laboratory in accordance with IESNA LM-79 and LM-80, and have received the Department of Energy 'Lighting Facts" label.

LED Characteristics

Lifespan:

100,000-hour LED lifespan based on IES LM-80 results and TM-21 calculations.

LEDs:

Long-life, high-efficiency surface mounting LEDs

Color Stability:

LED Color temperature is warrantied to shift no more than 200K in CCT over a 5 year period.

Color Uniformity:

RAB's range of CCT (Correlated Color Temperature) follows the guidelines of the American National Standard for Specifications for the Chromaticity of Solid State Lighting (SSL) Products, ANSI C78.377-2017.

Electrical

Driver:

Constant Current, Class 2, 120-277V, 50/60Hz, 120V: 1.12A, 208V: 0.70A, 240V: 0.60A, 277V 0.51A

Dimming Driver:

Driver includes dimming control wiring for 0-10V dimming systems. Requires separate 0-10V DC dimming circuit. Dims as low as 10%.

THD:

13.4% at 120V, 20.6% at 277V

Power Factor:

98.7% at 120V, 91.5% at 277V

Construction

Ambient Temperature:

Suitable for use 12 hours a day, 6 days a week in 60°C (140°F). Suitable for 24/7 use in ambient temperatures up to 55°C (131°F).

Housing:

Extruded aluminum

Lens:

High-transmittance polystyrene

Reflector:

Specular, high-reflectance aluminum with 95% reflectivity

Mounting:

V hooks (chain by others)

Finish:

Formulated for high-durability and long lasting color.

Green Technology:

Mercury and UV free. RoHS compliant components. Polyester powder coat finish formulated without the use of VOC or toxic heavy metals.

Recommended Mounting Height:

Up to 30 ft.

Other

Replacement:

Replaces 175-320W MH

Warranty:

RAB warrants that our LED products will be free from defects in materials and workmanship for a period of five (5) years from the date of delivery to the end user, including coverage of light output, color stability, driver performance and fixture finish.

Buy American Act Compliance:

RAB values USA manufacturing! Upon request, RAB may be able to manufacture this product to be compliant with the Buy American Act (BAA). Please contact customer service to request a quote for the product to be made BAA compliant.

Sensor Specifications

Handheld Wireless Configuration Tool:

Adjust settings using handheld wireless configuration tool. Only available with 0-10V dimming driver options.

Copyright © 2018 RAB Lighting Inc. All Rights Reserved Note: Specifications are subject to change at any time without notice

RAIL150NW/D10

Dimensions

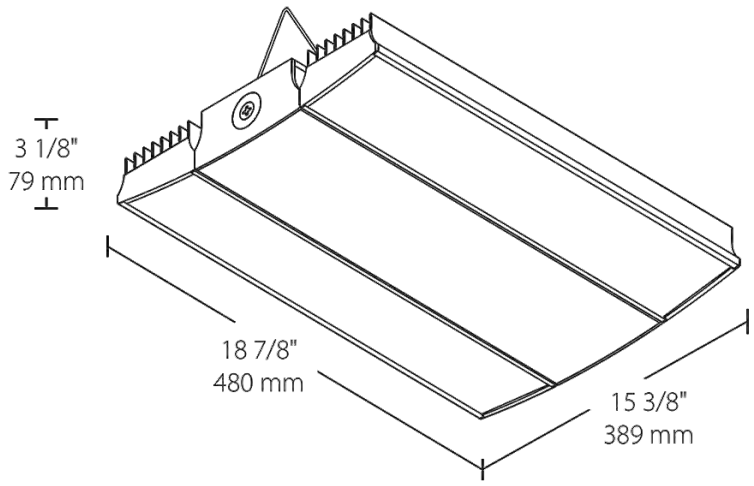

Features

- Ideal for large spaces
- Ultra-high efficacy
- Up to 60% less energy usage than equivalent metal halide fixtures
- 100,000 hour lifespan, virtually maintenance free operation
- 0-10V driver for variable dimming down to 10%

Ordering Matrix

Family	Wattage	Color Temp	Finish	Voltage	Dimming	Control Options
RAIL	150	N	W		/D10	
	225 = 225W **185** = 185W **150** = 150W **95** = 95W	**Blank** = 5000K (Cool) **N** = 4000K (Neutral) **YN** = 3500K (Warm Neutral)	**W** = White	**Blank** = 120-277V **/480** = 480V	**/D10** = 0-10V Dimming	**Blank** = No Controls **/BL** = Bi-Level Control (120-277V only) **/WS2** = Multi-Level Motion Sensor 20 ft **/WS4** = Multi-Level Motion Sensor 40 ft **/LOS** = LOSBAY800 Sensor (120-277V only) **/E2** = Emergency Battery Backup (120-277V only) **/LC** = Lightcloud® Controller (120-277V only) **/LCS** = Lightcloud® High Bay Sensor (120-277V only)

Copyright © 2018 RAB Lighting Inc. All Rights Reserved Note: Specifications are subject to change at any time without notice

envirobrite
RITEFIT • SERIES

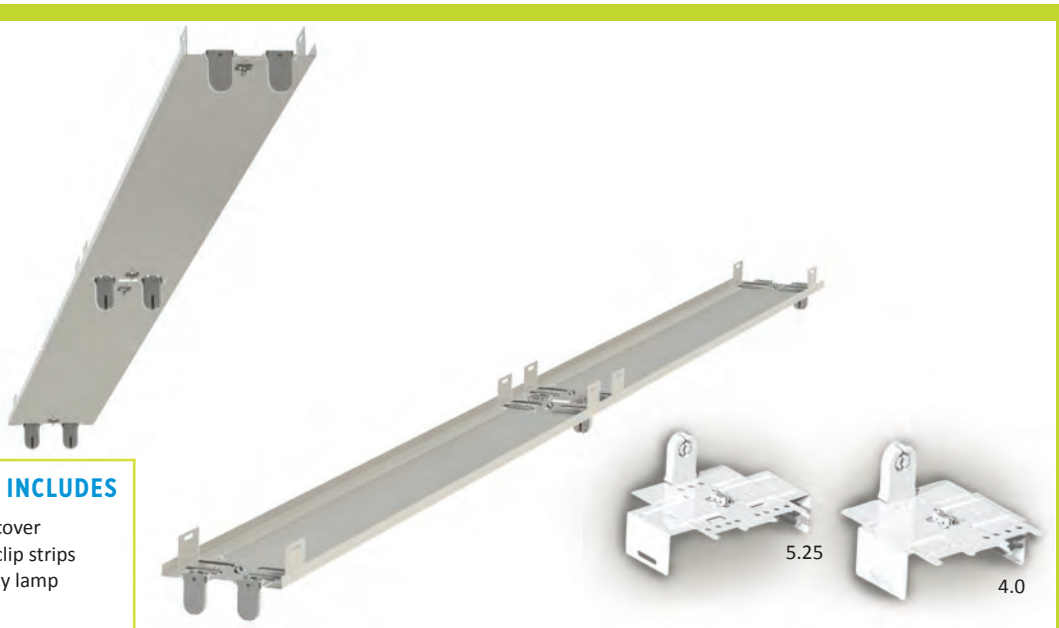

STANDARD ASSEMBLED KIT INCLUDES

- White painted aluminum ballast cover
- Unique and patented adjustable clip strips
- Shunted or unshunted high quality lamp holders
- All Fasteners

RBC – 1x8 Ballast Cover Kit

DESCRIPTION & APPLICATION

The Envirobrite® RBC ballast cover kits are used to retrofit existing 4’ and 8’ T12 and older T8 lamp fixtures for energy savings and improved lighting. These kits in conjunction with several ballast and lamp configurations will provide ideal IES recommended light levels with minimized energy consumption.

FEATURES & BENEFITS

- Unique and patented “Clip Strip” bracket is reversible for one, two, or three lamp configurations.
- Adjusts to any channel size between 4.0” and 5.25”
- Significant energy savings through delamping existing troffers
- Aluminum components provide less maintenance and lasting appeal
- Toolless ballast access for simple maintenance
- Hard tooled rounded edge brackets for improved installer safety
- 100% Recyclable
- Snap-in lamp holders won’t fall out during overhead installation
- Streamlined packaging for easy job site material management

APPROVAL BY

envirobrite
RITEFIT • SERIES

ENVIROBRITE FLUORESCENT FACTS

FLUORESCENT Lighting Facts

T8 Lamps Tested	
Lamp Length	4’
Number of Lamps	4 Lamp
Lamp Life Range	30,000 - 84,000 Hours
System Wattage	
Low: 71	High: 144
Lumen Range	
Low: 6,815	High: 14,260
Lumen Per Watt Range	
Low: 93	High: 103
CCT Range Correlated Color Temperature	3,000K - 6,500K
CRI Color Rendering Index	85

PHOTOMETRIC DATA

Total Luminaire Optical Efficiency = 92.3%

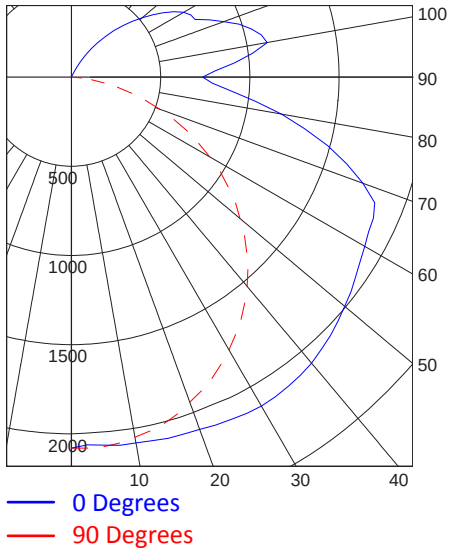

SPACING CRITERIA

0 Degrees	90 Degrees
1.26	1.55

SPECIFICATIONS

Dimensions	1.2” (H) X 96.0” (L) X 4.3” (W)
Voltage	Universal & High
Weight	3 Lbs per kit
Lamp Life	Up to 84,000 hours
Warranty	1 Year

ZONAL LUMEN SUMMARY

Zone	Lumens	% Lamp	% Luminaire
0-30	1,703	14%	16%
0-40	2,899	25%	27%
0-60	5,672	48%	52%
0-90	8,812	75%	81%
90-180	10,895	92%	100%

RBC84T8BCSS used for test
Custom photometric data for all fixtures are available

ORDERING INFORMATION

Sample number: RBC84T8BCSS

Type	Dimension	Lamp	Lamp Type	Reflector	Bracket Type / Strip Channel	Lampholder Type
RBC	8 = 1x8	2 = 2 Lamp	T5 = T5	B = Ballast Cover	CS = Clip Strip	S = Shunted
		3 = 3 Lamp	T8 = T8		43 = 4.3”	U = Unshunted
		4 = 4 Lamp			50 = 5”	N = None
		6 = 6 Lamp				

Please call 888-302-8920 for additional options and features.

RF

Date:_____
Type:_____
Project:_____

General Description:
This static troffer is designed for quick installation in "T" bar ceilings and is available with a wide variety of options.

Features and Benefits:
- Housing is standard in heavy gauge die formed cold rolled steel, for strength and maximum heat dissipation.
- Finished in baked white enamel or post powder coated for maximum reflectivity and durability.
- Hinged door frame with mitered corners.
- Swivel motion cam latches for easy access.
- All units are stamped with 7/8" knock-outs in the top, sides and includes access plates.
- For additional safety, this fixture has "earthquake clips" integrated in the housing.
- Standard lens is prismatic acrylic pattern 12, which provides uniform light distribution.
- All units are furnished with a universal voltage UL Listed Class "P" thermally protected ballast.
- Meets or exceeds all requirements for UL Luminaire Standard #1598.
- Complies with National Energy Standards.

Application:
It is suitable for use in all office, commercial, and industrial areas that use "T" bar grids.



RF END VIEW

DIMENSIONS

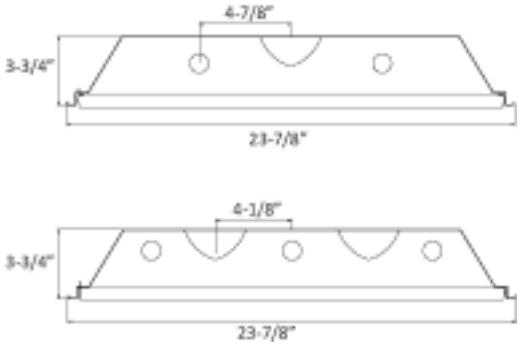

Housing	Length	# of Lamps	Lamp Type	Ballast	Voltage	Options
RF22 **RF24**	**2x2** **2x4**	**2** **3** **4**	**F32 T8** **F54 T5HO**	***T8*** **NP** (0.88 BF) **LP** (0.77 BF) **HP** (1.18BF) ***T5HO*** **NP** (1.0 BF)	***T8*** **120** **277** **EBUNI** (Multi Volt) ***T5HO*** **EBUNI** (Multi Volt)	**A12** Prismatic Acrylic Lens .125 **A15** Prismatic Acrylic Lens .156 **PC** Polycarbonate Lens .125 **SIL** 1/2" Silver Parabolic **SIL2** 3/4" Silver Parabolic **SIL3** 1-1/2" Silver Parabolic **FLG** Flange for Plaster Ceiling **FP** Flange Pan Drop Dish **NY** 20 Gauge NYC Housing **DM** Dimming Ballast **EMB** Emergency Ballast **WG** Wire Guard

Notice: *Dimensions and specifications subject to change without notice.*
Consult factory for additional options and accessories.

5-C MARLEN DRIVE, HAMILTON, NJ 08691
PHONE: 609-587-7900 FAX: 609-613-5586
WWW.MONMOUTHLIGHTING.COM

envirobrite
RITEFIT • SERIES

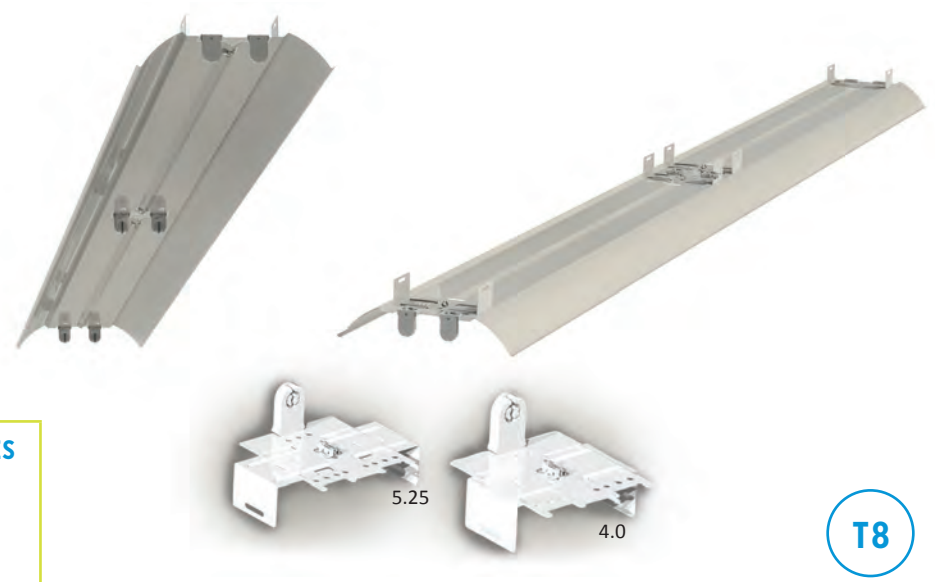

STANDARD ASSEMBLED KIT INCLUDES

- RST series aluminum reflector made from your choice of material
- Shunted or unshunted high quality lamp holders
- All Fasteners

T8

RST – 1x8 Industrial Strip Kit

DESCRIPTION & APPLICATION

The Envirobrite® RST industrial strip kits are fabricated with custom-made multi-stage roll forming machinery. In conjunction with the clip strip bracket, this kits optics, universal configuration, and adjustable clip strip bracketing system is an ideal fit for almost any commercial and industrial location.

FEATURES & BENEFITS

- Replace 8’ lamps with energy efficient and economical 4’ lamps
- Superior lighting reflects directly on the work plane
- Utility Rebate friendly
- Aluminum components provide less maintenance and lasting appeal
- 100% recyclable
- Streamlined packaging for easy job site material management
- Enhance existing fixture efficiencies
- Toolless ballast access for simple maintenance
- Hard tooled rounded edge brackets for improved installer safety

APPROVAL BY

CLASSIFIED UL

ENERGY PLANNING ASSOCIATES
148 MARITIME DRIVE SANFORD, FLORIDA 32771 TOLL FREE 1-888-302-8920 WWW.ENVIROBRITE.NET

envirobrite
RITEFIT • SERIES

ENVIROBRITE FLUORESCENT FACTS

FLUORESCENT Lighting Facts

T8 Lamps Tested	
Lamp Length	4’
Number of Lamps	2 Lamp
Lamp Life Range	30,000 - 84,000 Hours
System Wattage	
Low: 38	High: 74
Lumen Range	
Low: 3,455	High: 7,440
Lumen Per Watt Range	
Low: 91	High: 105
CCT Range Correlated Color Temperature	3,000K - 6,500K
CRI Color Rendering Index	85

PHOTOMETRIC DATA
Total Luminaire Optical Efficiency = 97.5%

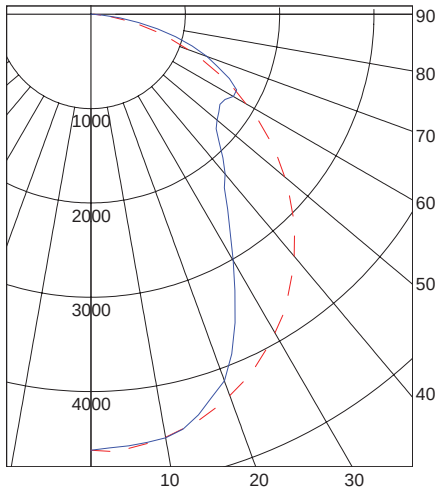

SPACING CRITERIA

0 Degrees	90 Degrees
1.25	1.04

SPECIFICATIONS

Dimensions	1.8” (H) x 21.5” (L) x 20.2” (W)
Voltage	Universal
Weight	3.7 Lbs per kit
Lamp Life	Up to 84,000 hours
Warranty	1 Year

ZONAL LUMEN SUMMARY

Zone	Lumens	% Lamp	% Luminaire
0-30	3,482	30%	31%
0-40	5,433	46%	48%
0-60	8,841	75%	78%
0-90	1,282	96%	100%

RST82T8ECSS used for test
Custom photometric data for all fixtures are available

ORDERING INFORMATION

Sample number: RST82T8ECSS

Type	Dimension	Lamp	Lamp Type	Reflector	Bracket Type	Lampholder Type
RST	8 = 1x8	2 = 2 Lamps	T5 = T5	E = 95% Enhanced	CS = Clip Strip	S = Shunted
		3 = 3 Lamps	T8 = T8	EU = 95% Enhanced Uplight	43 = 4.3”	U = Unshunted
		4 = 4 Lamps		W = 91% White	50 = 5”	N = None
		6 = 6 Lamps		WU = 91% White Uplight		

Please call 888-302-8920 for additional options and features.

envirobrite

RITEFIT • SERIES

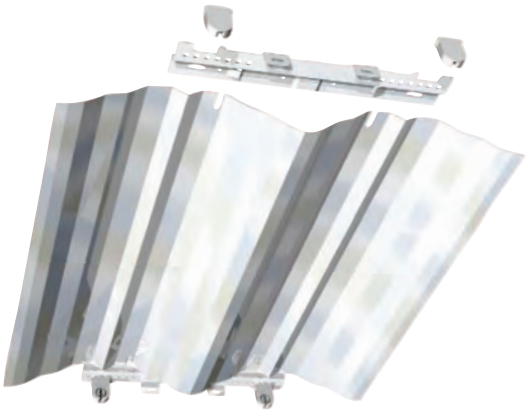

STANDARD ASSEMBLED KIT INCLUDES

- RTR series aluminum reflector made from your choice of specified material
- Stamped white painted aluminum brackets
- Shunted or unshunted high quality lamp holders
- All fasteners

RTR – 2x2 Troffer Reflector Kit

DESCRIPTION & APPLICATION

The Envirobrite® RTR Troffer kits are designed by our expert in house lighting engineers and fabricated with custom-made multi-stage roll forming machinery. The unique high speed equipment consistently produces multi-faceted fluorescent reflectors within precise quality tolerance. These reflector kits are ideal for office spaces, classrooms, hospitals, as well as many other commercial locations.

FEATURES & BENEFITS

- Significant energy savings through delamping existing troffers
- Significantly enhances existing fixture efficiencies
- Slots provide for easy bracket centering
- Variable tek screw slot locations allow for multiple mounting options
- Aluminum components provide less maintenance and lasting appeal
- Less than 2” reflector depth allows for shallow fixture fit
- 9 3/4” lamp spacing enhances appearance of 18 cell parabolic retrofits
- Multi-facet optical design for maximum performance
- 100% recyclable
- Toolless ballast access for simple maintenance

APPROVAL BY

CLASSIFIED UL

envirobrite
RITEFIT • SERIES

ENVIROBRITE FLUORESCENT FACTS

FLUORESCENT Lighting Facts

T8 Lamps Tested	
Lamp Length	2′
Number of Lamps	2 Lamps
Lamp Life Range	40,000 - 84,000 Hours
System Wattage	
Low: 24	High: 38
Lumen Range	
Low: 1,980	High: 3,275
Lumen Per Watt Range	
Low: 83	High: 86
CCT Range Correlated Color Temperature	3,000K - 4,100K
CRI Color Rendering Index	85

PHOTOMETRIC DATA

Total Luminaire Optical Efficiency = 76.0%

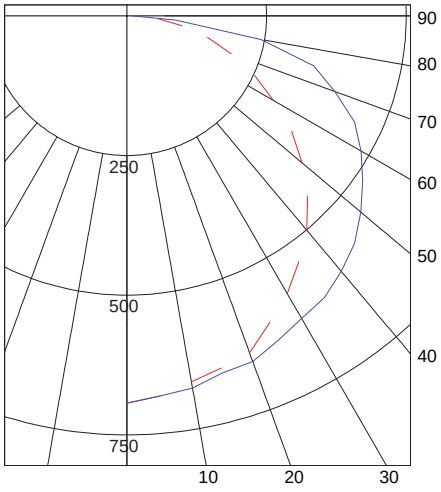

SPACING CRITERIA

0 Degrees	90 Degrees
1.23	1.37

SPECIFICATIONS

Dimensions	1.8” (H) x 45.4” (L) x 20.2” (W)
Voltage	Universal
Weight	1.3 Lbs per kit
Lamp Life	Up to 84,000 hours
Warranty	1 Year

ZONAL LUMEN SUMMARY

Zone	Lumens	% Lamp	% Luminaire
0-30	758	27%	36%
0-40	1,193	43%	56%
0-60	1,849	66%	87%
0-90	2,123	76%	100%

RTR22T8ES used for test
Custom photometric data for all fixtures are available

ORDERING INFORMATION

Sample number: RTR22T8ES

Type	Dimension	Lamp	Lamp Type	Reflector	Lampholder Type
RTR	2 = 2x2	2 = 2 Lamp	T5 = T5	E = 95% Enhanced	S = Shunted
		3 = 3 Lamp	T8 = T8	W = 91% White	U = Unshunted
		4 = 4 Lamp			N = None

Please call 888-302-8920 for additional options and features.

SF

Date:_____
Type:_____
Project:_____

General Description:
This surface static troffer is designed for quick installation onto plaster or sheet rock ceilings and is available with a wide variety of options.

Features and Benefits:
- Housing is standard in heavy gauge die formed cold rolled steel, for strength and maximum heat dissipation.
- Finished in baked white enamel or post powder coated for maximum reflectivity and durability.
- Hinged door frame with mitered corners.
- Swivel motion cam latches for easy access.
- All units are stamped with 7/8” knock-outs in the top and includes access plates.
- Standard lens is prismatic acrylic pattern 12, which provides uniform light distribution.
- All units are furnished with a universal voltage UL Listed Class “P” thermally protected ballast.
- Meets or exceeds all requirements for UL Luminaire Standard #1598.
- Complies with National Energy Standards.



SF END VIEW

Application:

This fixture is suitable for use in all office, commercial, and industrial areas.

DIMENSIONS

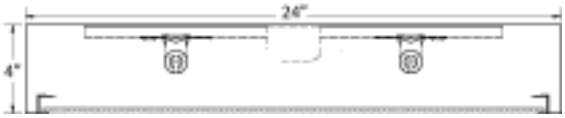

Housing	Length	# of Lamps	Lamp Type	Ballast	Voltage	Options
SF22 **SF24**	**2x2** **2x4**	**2** **3** **4** **6**	**F32 T8** **F17T8** **F28T5** **F54 T5HO**	***T8*** **NP** (0.88 BF) **LP** (0.77 BF) **HP** (1.18BF) ***T5HO*** **NP** (1.0 BF)	***T8*** **120** **277** **EBUNI** (Multi Volt) ***T5HO*** **EBUNI** (Multi Volt)	**A12** Prismatic Acrylic Lens .125 **A15** Prismatic Acrylic Lens .156 **PC** Polycarbonate Lens .125 **SIL** 1/2” Silver Parabolic **SIL2** 3/4” Silver Parabolic **SIL3** 1-1/2” Silver Parabolic **ALH** Aluminium Housing **STS** Stainless Steel Housing **DM** Dimming Ballast **EMB** Emergency Ballast **REF** Reflector (86%,92%,95%)

Notice: *Dimensions and specifications subject to change without notice.*
Consult factory for additional options and accessories.

5-C MARLEN DRIVE, HAMILTON, NJ 08691
PHONE: 609-587-7900 FAX: 609-613-5586
WWW.MONMOUTHLIGHTING.COM

SIF Fluorescent Standard Industrial Fixture

APPLICATION

This economical industrial fixture is ideal for use in all industrial general lighting applications, as well as task lighting applications.



CONSTRUCTION

This fixture is constructed of heavy gauge die formed steel, and is finished in baked white enamel or white post powder paint for maximum reflectivity and durability. Socket bars and end plates snap in for easy fixture service. The reflector clips on at one end, and is secured by a quarter turn fastener at the other, allowing for ease of installation/removal, without the need for tools. End plate doubles as an aligner plate when this fixture is used in continuous run configurations. Reflectors are available in asymmetrical formations.

ELECTRICAL

All units are furnished with UL Listed Class “P” thermally protected ballast. Fixtures meet or exceed requirements for UL Luminaire Standard #1598. Additionally, each unit is in compliance with current National Energy Standards.

MOUNTING

The SIF fixture is prepared with provisions for surface, pendant, chain, and cable mounting. Fixtures can be mounted individually or in continuous runs. End plates have 7/8” knock-outs for electrical connection from the end if desired.

DIMENSIONS

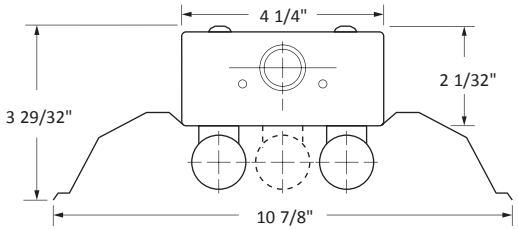

ORDERING INFORMATION

EXAMPLE: SIF-4-232-EBUNI-NP-EMB

HOUSING	LENGTH	# LAMPS	LAMP TYPE	VOLTAGE	BALLAST	OPTIONS
SIF	4'	1	**T8**			**CO** Convenience Outlet
	6'	2	**17** F17 T8	**120** 120V	**NP** 0.88 BF	**EMB** Emergency Ballast
	8'	3	**25** F25 T8	**277** 277V	**LP** 0.77 BF	**NY** 20 Gauge NYC Housing
		4	**32** T8LED	**EBUNI** Multi Volt	**HP** 1.18 BF	**PS** Pull Chain Switch
		6	**T5**			**REF** Reflector (86%, 92%, 95%) symmetrical/asymmetrical
			14 F14 T5	**EBUNI** Multi Volt	**NP** 0.90 BF	**WG** Wire Guard
			28 F28 T5			
			T5HO			
			54 F54 T5HO	**EBUNI** Multi Volt	**NP** 1.0 BF	

Consult factory for other options

Monmouth Lighting Corp. | 5-C Marlen Drive, Hamilton, NJ 08691
T: 609-587-7900 | F: 609-613-5586 | www.monmouthlighting.com

TBLED3T64RG/D10/PCT



LED roadway lighting that replaces up to 250W MH or 150W HPS. Optics are factory installed and meet IES Distribution Type III.

Color: Gray Weight: 9.2 lbs

Project:	Type:
Prepared By:	Date:

Driver Info		LED Info	
Type:	Constant Current	Watts:	64W
120V:	0.56A	Color Temp:	5000K
208V:	0.34A	Color Accuracy:	72 CRI
240V:	0.29A	L70 Lifespan:	100000
277V:	0.25A	Lumens:	7354
Input Watts:	67W	Efficacy:	109 LPW
Efficiency:	95%		

Technical Specifications

Listings

UL Listing:

Suitable for wet locations. Minimum of 75° supply conductors.

DLC Listed:

This product is on the Design Lights Consortium (DLC) Qualified Products List and is eligible for rebates from DLC Member Utilities.
DLC Product Code: PXVAT7C8

IESNA LM-79 & IESNA LM-80 Testing:

RAB LED fixtures have been tested by an independent laboratory in accordance with IESNA LM-79 and 80, and have received the Department of Energy "Lighting Facts" label.

Construction

IES Classification:

The Type III distribution is ideal for roadway, general parking and other area lighting applications where a larger pool of lighting is required. It has greater streetside (transverse) throw, allowing the light to project outward and fill the area.

IP Rating:

Ingress Protection rating of IP66 for dust and water

Vibration Rating:

Industry-leading 5G vibration rating per ANSI C136.31.

Ambient Temperature:

SuitableFor use in 40°C (104°F) ambient temperatures.

Cold Weather Starting:

The minimum starting temperature is -30°C (-22°F).

Thermal Management:

Superior thermal management design with external Air-Flow fins provides maximum operational life, even in high ambient temperature environments.

Housing:

Die cast aluminum housing with polycarbonate driver cover.

Lens:

Clear acrylic lens with integrated optics

Mounting:

Fits most standard roadway upsweep arms. Adaptor brackets supplied fit 1", 1 1/4", 1 1/2" and 2" pipe arms. Fixture can be tilted at the following angles -5°, -2.5°, 0°, +2,5°, +5°.

Gaskets:

High temperature silicone gaskets

Effective Projected Area:

EPA = 0.7

Finish:

Formulated for high-durability and long lasting color.

Green Technology:

Mercury and UV free. RoHS compliant components. Polyester powder coat finish formulated without the use of VOC or toxic heavy metals.

LED Characteristics

LEDs:

Multi-chip, high-output, long-life LEDs

Color Uniformity:

RAB's range of CCT (Correlated Color Temperature) follows the guidelines of the American National Standard for Specifications for the Chromaticity of Solid State Lighting (SSL) Products, ANSI C78.377-2017.

Electrical

Drivers:

Constant Current, Class 2, 100-277V, 50-60Hz, 120V: 0.27A, 208A: 0.17A, 240A: 0.15A, 277V: 0.13A

Dimming Driver:

Driver includes dimming control wiring for 0-10V dimming systems. Requires separate 0-10V DC dimming circuit. Dims as low as 10%.

7-Pin Receptacle:

ANSI C136.41 7-pin receptacle, compatible with wireless control systems

Surge Protection:

10kV

Optical

BUG Rating:

B1 U0 G1

Other

Equivalency:

Replaces 175W Metal Halide or 100W HPS.

Photocell:

120-277V twistlock photocell included. Photocell is compatible with 120V - 277V.

Accessory:

Shorting Cap for 7-Pin Receptacle

Copyright © 2018 RAB Lighting Inc. All Rights Reserved Note: Specifications are subject to change at any time without notice

Technical Specifications (continued)

Other

Buy American Act Compliance:

RAB values USA manufacturing! Upon request, RAB may be able to manufacture this product to be compliant with the Buy American Act (BAA). Please contact customer service to request a quote for the product to be made BAA compliant.

Dimensions

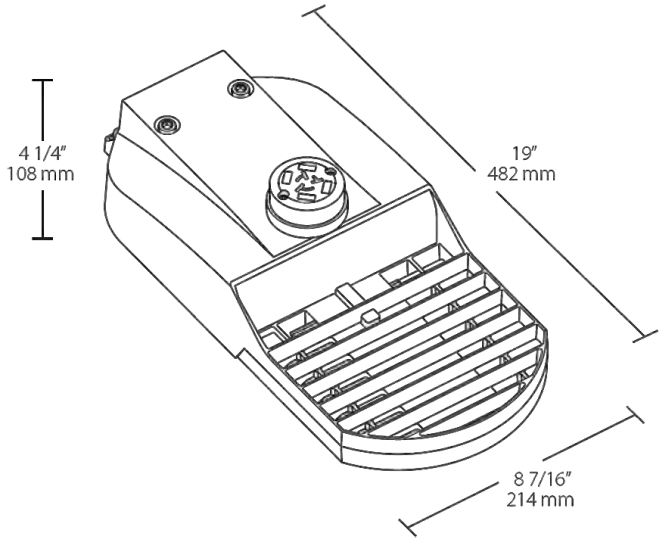

Features

- IP66 Rated
- Industry-leading 5G vibration rating per ANSI C136.31
- ANSI C136.41 7-pin receptacle, compatible with wireless control systems
- 100,000-Hour LED lifespan
- 10-Year limited warranty

Ordering Matrix

Family	IES Type	Wattage	Color Temp	Color	Driver Options	Sensor Options
TBLED	3T	64		RG	/D10	/PCT
	4T = Type IV **3T** = Type III **2T** = Type II	**95** = 95W **64** = 64W **48** = 48W **32** = 32W	**Blank** = 5000K (Cool) **N** = 4000K (Neutral) **Y** = 3000K (Warm) **AY** = 2000K (HPS Warm)	**RG** = Roadway Gray	**/D10** = 0-10V Dimming (standard) **/480/D10** = 480V 0-10V Dimming	**/7PR** = 7-Pin Receptacle (standard) **/7PRS** = 7-Pin Receptacle w/ Shorting Cap **/PCT** = 120-277V Twistlock Photocell w/ 7-Pin Receptacle **/PCT4** = 480V Twistlock Photocell w/ 7-Pin Receptacle

Copyright © 2018 RAB Lighting Inc. All Rights Reserved Note: Specifications are subject to change at any time without notice

TBLED3T95RG/D10/PCT



LED roadway lighting that replaces up to 250W MH or 150W HPS. Optics are factory installed and meet IES Distribution Type III.

Color: Gray Weight: 9.2 lbs

Project:	Type:
Prepared By:	Date:

Driver Info		LED Info	
Type:	Constant Current	Watts:	95W
120V:	0.78A	Color Temp:	5000K
208V:	0.46A	Color Accuracy:	72 CRI
240V:	0.40A	L70 Lifespan:	100000
277V:	0.34A	Lumens:	10955
Input Watts:	93W	Efficacy:	118 LPW
Efficiency:	N/A		

Technical Specifications

Listings

UL Listing:

Suitable for wet locations. Minimum of 75° supply conductors.

DLC Listed:

This product is listed by Design Lights Consortium (DLC) as an ultra-efficient premium product that qualifies for the highest tier of rebates from DLC Member Utilities.
DLC Product Code: PDRB5535

IESNA LM-79 & IESNA LM-80 Testing:

RAB LED fixtures have been tested by an independent laboratory in accordance with IESNA LM-79 and 80, and have received the Department of Energy "Lighting Facts" label.

Construction

IES Classification:

The Type III distribution is ideal for roadway, general parking and other area lighting applications where a larger pool of lighting is required. It has greater streetside (transverse) throw, allowing the light to project outward and fill the area.

IP Rating:

Ingress Protection rating of IP66 for dust and water

Vibration Rating:

Industry-leading 5G vibration rating per ANSI C136.31.

Ambient Temperature:

SuitableFor use in 40°C (104°F) ambient temperatures.

Cold Weather Starting:

Minimum starting temperature is -40°C (-40°F)

Thermal Management:

Superior thermal management design with external Air-Flow fins provides maximum operational life, even in high ambient temperature environments.

Housing:

Die cast aluminum housing with polycarbonate driver cover.

Lens:

Clear acrylic lens with integrated optics

Mounting:

Fits most standard roadway upsweep arms. Adaptor brackets supplied fit 1", 1 1/4", 1 1/2" and 2" pipe arms. Fixture can be tilted at the following angles -5°, -2.5°, 0°, +2,5°, +5°.

Gaskets:

High temperature silicone gaskets

Effective Projected Area:

EPA = 0.8

Finish:

Formulated for high-durability and long lasting color.

Green Technology:

Mercury and UV free. RoHS compliant components. Polyester powder coat finish formulated without the use of VOC or toxic heavy metals.

LED Characteristics

LEDs:

Multi-chip, high-output, long-life LEDs

Color Uniformity:

RAB's range of CCT (Correlated Color Temperature) follows the guidelines of the American National Standard for Specifications for the Chromaticity of Solid State Lighting (SSL) Products, ANSI C78.377-2017.

Electrical

Drivers:

Constant Current, Class 2, 90-305V, 50-60Hz, 120V: 0.78A, 208A: 0.46A, 240A: 0.40A, 277V: 0.34A

Dimming Driver:

Driver includes dimming control wiring for 0-10V dimming systems. Requires separate 0-10V DC dimming circuit. Dims as low as 10%.

7-Pin Receptacle:

ANSI C136.41 7-pin receptacle, compatible with wireless control systems

Surge Protection:

10kV

Optical

BUG Rating:

B1 U0 G1

Other

Equivalency:

Replaces 250W Metal Halide or 150W HPS.

Photocell:

120-277V twistlock photocell included. Photocell is compatible with 120V - 277V.

Accessory:

Shorting Cap for 7-Pin Receptacle

Copyright © 2018 RAB Lighting Inc. All Rights Reserved Note: Specifications are subject to change at any time without notice

Technical Specifications (continued)

Other

Buy American Act Compliance:

RAB values USA manufacturing! Upon request, RAB may be able to manufacture this product to be compliant with the Buy American Act (BAA). Please contact customer service to request a quote for the product to be made BAA compliant.

Dimensions

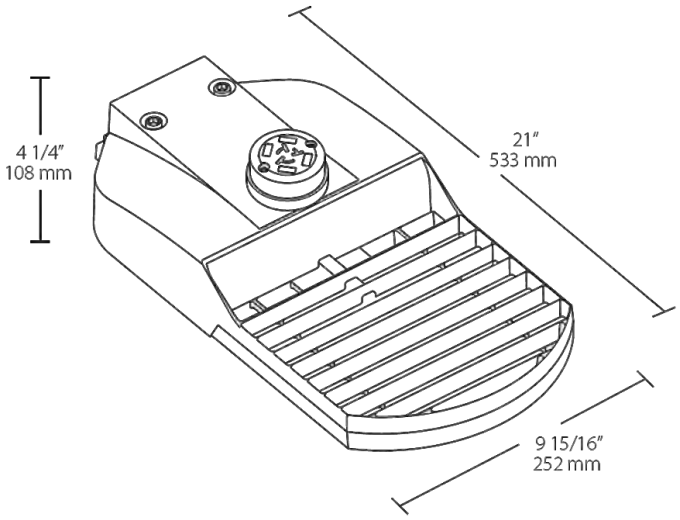

Features

- IP66 Rated
- Industry-leading 5G vibration rating per ANSI C136.31
- ANSI C136.41 7-pin receptacle, compatible with wireless control systems
- 100,000-Hour LED lifespan
- 10-Year limited warranty

Ordering Matrix

Family	IES Type	Wattage	Color Temp	Color	Driver Options	Sensor Options
TBLED	3T	95		RG	/D10	/PCT
	4T = Type IV **3T** = Type III **2T** = Type II	**95** = 95W **64** = 64W **48** = 48W **32** = 32W	**Blank** = 5000K (Cool) **N** = 4000K (Neutral) **Y** = 3000K (Warm) **AY** = 2000K (HPS Warm)	**RG** = Roadway Gray	**/D10** = 0-10V Dimming (standard) **/480/D10** = 480V 0-10V Dimming	**/7PR** = 7-Pin Receptacle (standard) **/7PRS** = 7-Pin Receptacle w/ Shorting Cap **/PCT** = 120-277V Twistlock Photocell w/ 7-Pin Receptacle **/PCT4** = 480V Twistlock Photocell w/ 7-Pin Receptacle

Copyright © 2018 RAB Lighting Inc. All Rights Reserved Note: Specifications are subject to change at any time without notice

Item #	Description	Voltage	Watt	Incandescent Wattage Comparison	Lumens	LPW	CCT	CRI	M.O.L. (inches)	Diameter (inches)	Case Quantity	Enclosed/ Recessed Luminaire	Energy Star® Rated	Replaces
40W Equivalent Options														
6W A19 A-Lamp - DIMMABLE - 25,000 Hours Rated Life														
L6A19D2524K	6W Dimmable A-Lamp - 2400K	120	6	40	375	62.5	2400K	80	4.0	2.2	12	Y	N	LED7A19D0D24K LED7A19D24K
L6A19D2550K	6W Dimmable A-Lamp - 5000K	120	6	40	525	87.5	5000K	80	4.0	2.2	12	Y	Y	LED7A19D0D50K LED7A19D50K
6W A19 A-Lamp - Non Dimmable - 15,000 Hours Rated Life														
L6A19N1530K	6W Non Dimmable A-Lamp - 3000K	120	6	40	480	80.0	3000K	80	4.0	2.2	12	Y	Y	LED5A1930K
L6A19N1541K	6W Non Dimmable A-Lamp - 4100K	120	6	40	500	83.3	4100K	80	4.0	2.2	12	Y	Y	LED5A1941K
L6A19N1550K	6W Non Dimmable A-Lamp - 5000K	120	6	40	525	87.5	5000K	80	4.0	2.2	12	Y	Y	LED5A1950K
60W Equivalent Options														
9W A19 A-Lamp - DIMMABLE - 25,000 Hours Rated Life														
L9A19D2527K	9W Dimmable A-Lamp - 2700K	120	9	60	800	88.9	2700K	80	4.3	2.4	12	Y	Y	LED10A19D0D27K LED10A19D27K
L9A19D2530K	9W Dimmable A-Lamp - 3000K	120	9	60	825	91.7	3000K	80	4.3	2.4	12	Y	Y	LED10A19D0D30K LED10A19D30K
L9A19D2541K	9W Dimmable A-Lamp - 4100K	120	9	60	850	94.4	4100K	80	4.3	2.4	12	Y	Y	LED10A19D0D41K LED10A19D41K
9W A19 A-Lamp - DIMMABLE - 15,000 Hours Rated Life														
L9A19D1527K24	9W Dimmable A-Lamp - 2700K 24PK	120	9	60	800	88.9	2700K	80	4.3	2.4	2	Y	Y	
L9A19D1527K	9W Dimmable A-Lamp - 2700K	120	9	60	800	88.9	2700K	80	4.3	2.4	12	Y	Y	LED9A19D27K
L9A19D1530K	9W Dimmable A-Lamp - 3000K	120	9	60	825	91.7	3000K	80	4.3	2.4	12	Y	Y	LED9A19D30K
L9A19D1541K	9W Dimmable A-Lamp - 4100K	120	9	60	850	94.4	4100K	80	4.3	2.4	12	Y	Y	LED9A19D41K
L9A19D1550K	9W Dimmable A-Lamp - 5000K	120	9	60	850	94.4	5000K	80	4.3	2.4	12	Y	Y	LED9A19D50K
9W A19 A-Lamp - Non Dimmable - 15,000 Hours Rated Life														
L9A19N1527K	9W Non Dimmable A-Lamp - 2700K	120	9	60	800	88.9	2700K	80	4.4	2.4	12	Y	Y	LED10A19OD27K LED9A1927K
L9A19N1530K	9W Non Dimmable A-Lamp - 3000K	120	9	60	825	91.7	3000K	80	4.4	2.4	12	Y	Y	LED10A19OD30K LED9A1930K
L9A19N1541K	9W Non Dimmable A-Lamp - 4100K	120	9	60	850	94.4	4100K	80	4.4	2.4	12	Y	Y	LED10A19OD41K LED9A1941K
L9A19N1550K	9W Non Dimmable A-Lamp - 5000K	120	9	60	875	97.2	5000K	80	4.4	2.4	12	Y	Y	LED10A19OD50K LED9A1950K
75W Equivalent Options														
11W A19 A-Lamp - DIMMABLE - 25,000 Hours Rated Life														
L11A19D2527K	11W Dimmable A-Lamp - 2700K	120	11	75	1150	104.5	2700K	80	4.6	2.4	12	Y	Y	LED13A21D0D27K
11W A19 A-Lamp - Non Dimmable - 15,000 Hours Rated Life														
L11A19N1527K	11W Non Dimmable A-Lamp - 2700K	120	11	75	1100	100.0	2700K	80	4.6	2.4	12	Y	Y	LED13A2127K
L11A19N1530K	11W Non Dimmable A-Lamp - 3000K	120	11	75	1150	104.5	3000K	80	4.6	2.4	12	Y	Y	LED13A2130K
L11A19N1550K	11W Non Dimmable A-Lamp -5000K	120	11	75	1225	111.4	5000K	80	4.6	2.4	12	Y	Y	LED13A2150K

continued next page

WARRANTIES and CERTIFICATIONS

5 YEAR WARRANTY* 25,000 Hour Lamps

3 YEAR WARRANTY* 15,000 Hour Lamps

*Based on 12 hours use per day

c UL us RoHS COMPLIANT



L6A19D25 L6A19N15 L9A19D25 L9A19D15 L9A19N15 L11A19D25 L11A19N15 L16A19N15 L15A19D25

Specification Notes:

All Energy Star rated products meet the new Energy Star 2.0 spec for light distribution

Vapor tight or jelly jar applications may reduce life

For the most up-to-date specs, please visit www.tcpi.com

TCP®
325 Campus Dr. | Aurora, Ohio 44202 | P: 1-800-324-1496 | tcpi.com

©TCP SEP 2017 - WF49886 update 9/27/17

ENERGY STAR PARTNER

★ SEE NEW 100W EQUIVALENT SPEC SHEET ★

100W Equivalent Options

Item #	Description	Voltage	Watt	Incandescent Wattage Comparison	Lumens	LPW	CCT	CRI	M.O.L. (inches)	Diameter (inches)	Case Quantity	Enclosed/ Recessed Luminaire	Energy Star® Rated	Replaces
16W A19 A-Lamp - Non Dimmable - 15,000 Hours Rated Life														
L16A19N1527K	16W Non Dimmable A-Lamp - 2700K	120	16	100	1600	100.0	2700K	80	4.6	2.5	12	Y	Y	LED15A2127K
L16A19N1530K	16W Non Dimmable A-Lamp - 3000K	120	16	100	1625	101.6	3000K	80	4.6	2.5	12	Y	Y	LED15A2130K
L16A19N1541K	16W Non Dimmable A-Lamp - 4100K	120	16	100	1650	103.1	4100K	80	4.6	2.5	12	Y	Y	LED15A2141K
L16A19N1550K	16W Non Dimmable A-Lamp - 5000K	120	16	100	1675	104.7	5000K	80	4.6	2.5	12	Y	Y	LED15A2150K
15W A19 A-Lamp - DIMMABLE - 25,000 Hours Rated Life														
L15A19D2527K	15W Dimmable A-Lamp - 2700K	120	15	100	1600	106.7	2700K	80	4.6	2.5	12	Y	Y	LED18A21DOD27K LED16A21D27K
L15A19D2530K	15W Dimmable A-Lamp - 3000K	120	15	100	1625	108.3	3000K	80	4.6	2.5	12	Y	Y	LED18A21DOD30K LED16A21D30K
L15A19D2541K	15W Dimmable A-Lamp - 4100K	120	15	100	1650	110.0	4100K	80	4.6	2.5	12	Y	Y	LED18A21DOD41K LED16A21D41K
L15A19D2550K	15W Dimmable A-Lamp - 5000K	120	15	100	1675	111.7	5000K	80	4.6	2.5	12	Y	Y	LED18A21DOD50K LED16A21D50K

WARRANTIES and CERTIFICATIONS

5 YEAR WARRANTY* 25,000 Hour Lamps

3 YEAR WARRANTY* 15,000 Hour Lamps

*Based on 12 hours use per day

c UL us RoHS COMPLIANT



L6A19D25 L6A19N15 L9A19D25 L9A19D15 L9A19N15 L11A19D25 L11A19N15 L16A19N15 L15A19D25

Specification Notes:

All Energy Star rated products meet the new Energy Star 2.0 spec for light distribution

Vapor tight or jelly jar applications may reduce life

For the most up-to-date specs, please visit www.tcpi.com

TCP®
325 Campus Dr. | Aurora, Ohio 44202 | P: 1-800-324-1496 | tcpi.com

©TCP SEP 2017 - WF49886 update 9/27/17

ENERGY STAR PARTNER

VANLED10



Low-profile vandal-resistant fixture covers the footprint of most traditional canopy lights. Available in flat or drop lens with frosted and unfrosted options.

Color: Bronze Weight: 12.0 lbs

Project:	Type:
Prepared By:	Date:

Driver Info		LED Info	
Type:	Constant Current	Watts:	10W
120V:	0.30A	Color Temp:	5000K
208V:	0.20A	Color Accuracy:	78 CRI
240V:	0.17A	L70 Lifespan:	100000
277V:	0.15A	Lumens:	1681
Input Watts:	13W	Efficacy:	128 LPW
Efficiency:	76%		

Technical Specifications

Listings

UL Listing:

Suitable for Wet Locations. Covered Ceiling Mount Only.

DLC Listed:

This product is on the Design Lights Consortium (DLC) Qualified Products List and is eligible for rebates from DLC Member Utilities.
DLC Product Code: PMZZWGXN

IESNA LM-79 & LM-80 Testing:

RAB LED luminaires have been tested by an independent laboratory in accordance with IESNA LM-79 and LM-80, and have received the Department of Energy "Lighting Facts" label.

Electrical

Driver:

Class 2, Constant Current, 100-277V, 50-60Hz, 280mA

THD:

16% at 277V

Construction

Maximum Ambient Temperature:

Suitable for use in 40°C (104°F) ambient temperatures

Cold Weather Starting:

Minimum starting temperature is -40°C (-40°F)

Housing:

Die-cast aluminum housing and lens frame with (4) 1/2" NPS side conduit entries and weatherproof rear wire plug and access plate

Mounting:

Ceiling mount to recessed junction with knockout template or directy to ceiling surface, utilizing side conduit entry points.

IP Rating:

Ingress Protection rating of IP66 for dust and water

Lens:

Vandal-resistant polycarbonate textured opaque for low glare drop lens

Reflector:

Semi-specular, vacuum-metalized polycarbonate

Gaskets:

High-temperature silicone gaskets

Finish:

Our environmentally friendly polyester powder coatings are formulated for high-durability and long-lasting color.

Green Technology:

Mercury and UV free. RoHS compliant components. Polyester powder coat finish formulated without the use of VOC or toxic heavy metals.

LED Characteristics

LEDs:

Discreet LEDs on PCB board

Color Stability:

RAB LEDs exceed industry standards for chromatic stability.

Color Uniformity:

RAB's range of CCT (Correlated Color Temperature) follows the guidelines of the American National Standard for Specifications for the Chromaticity of Solid State Lighting (SSL) Products, ANSI C78.377-2017.

Other

Warranty:

RAB warrants that our LED products will be free from defects in materials and workmanship for a period of five (5) years from the date of delivery to the end user, including coverage of light output, color stability, driver performance and fixture finish. See our full warranty

Replacement:

Replaces up to 50W Metal Halide.

Buy American Act Compliance:

RAB values USA manufacturing! Upon request, RAB may be able to manufacture this product to be compliant with the Buy American Act (BAA). Please contact customer service to request a quote for the product to be made BAA compliant.

Copyright © 2018 RAB Lighting Inc. All Rights Reserved Note: Specifications are subject to change at any time without notice

VANLED10

Dimensions

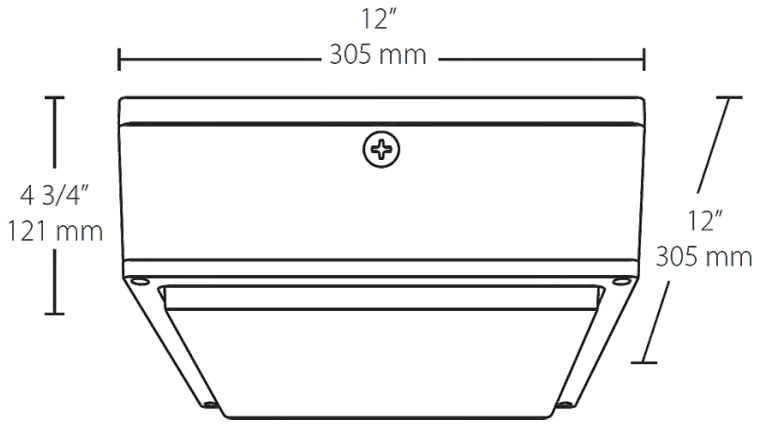

Features

- Fits the footprint of older canopy lights
- Vandal resistant and UV resistant lens
- Ultra-high efficiency
- Clean, contemporary, low-profile design
- Available with drop lens or flat lens
- IP66 rated, keeps dust, bugs and water out
- Photo and motion sensor options available

Ordering Matrix

Family	Wattage	Color Temp	Lens	Motion Sensor & Finish	Driver Options	Photocell Options
VANLED						
	10 = 10W **20** = 20W **40** = 40W **52** = 52W **65** = 65W **75** = 75W	**Blank** = 5000K (Cool) **N** = 4000K (Neutral) **Y** = 3000K (Warm)	**Blank** = Drop lens **F** = Flat lens **FR** = Frosted Drop Lens **FFR** = Frosted Flat Lens	**Blank** = Bronze, no sensor **W** = White, no sensor **MS** = Bronze w/ SMS500 mini-sensor (not available w/ D10 models) **MSW** = White w/ SMS500 mini-sensor (not available w/ D10 models)	**Blank** = On/Off driver **/D10** = 0-10V Dimming (not available for 10w) **/480** = 480V (not available for 10W or 20W) **/480/D10** = 480V w/ 0-10V dimming (not available for 10W or 20W)	**/PCS** = 120V Swivel **/PCS2** = 277V Swivel **/PCS4** = 480V Swivel

Copyright © 2018 RAB Lighting Inc. All Rights Reserved Note: Specifications are subject to change at any time without notice

VANLED20



Low-profile vandal-resistant fixture covers the footprint of most traditional canopy lights. Available in flat or drop lens with frosted and unfrosted options.

Color: Bronze Weight: 12.0 lbs

Project:	Type:
Prepared By:	Date:

Driver Info		LED Info	
Type:	Constant Current	Watts:	20W
120V:	0.30A	Color Temp:	5000K
208V:	0.20A	Color Accuracy:	78 CRI
240V:	0.17A	L70 Lifespan:	100000
277V:	0.15A	Lumens:	2740
Input Watts:	22W	Efficacy:	126 LPW
Efficiency:	92%		

Technical Specifications

Listings

UL Listing:

Suitable for Wet Locations. Covered Ceiling Mount Only.

DLC Listed:

This product is on the Design Lights Consortium (DLC) Qualified Products List and is eligible for rebates from DLC Member Utilities.
DLC Product Code: PZQ1Z223

IESNA LM-79 & LM-80 Testing:

RAB LED luminaires have been tested by an independent laboratory in accordance with IESNA LM-79 and LM-80, and have received the Department of Energy "Lighting Facts" label.

Electrical

Driver:

Class 2, Constant Current, 100-277V, 50-60Hz, 500mA

THD:

6.1% at 120V, 10.1% at 277V

Construction

Maximum Ambient Temperature:

Suitable for use in 40°C (104°F) ambient temperatures

Cold Weather Starting:

Minimum starting temperature is -40°C (-40°F)

Housing:

Die-cast aluminum housing and lens frame with (4) 1/2" NPS side conduit entries and weatherproof rear wire plug and access plate

Mounting:

Ceiling mount to recessed junction with knockout template or directy to ceiling surface, utilizing side conduit entry points.

IP Rating:

Ingress Protection rating of IP66 for dust and water

Lens:

Vandal-resistant polycarbonate textured opaque for low glare drop lens

Reflector:

Semi-specular, vacuum-metalized polycarbonate

Gaskets:

High-temperature silicone gaskets

Finish:

Our environmentally friendly polyester powder coatings are formulated for high-durability and long-lasting color.

Green Technology:

Mercury and UV free. RoHS compliant components. Polyester powder coat finish formulated without the use of VOC or toxic heavy metals.

LED Characteristics

LEDs:

Discreet LEDs on PCB board

Color Stability:

RAB LEDs exceed industry standards for chromatic stability.

Color Uniformity:

RAB's range of CCT (Correlated Color Temperature) follows the guidelines of the American National Standard for Specifications for the Chromaticity of Solid State Lighting (SSL) Products, ANSI C78.377-2017.

Other

Warranty:

RAB warrants that our LED products will be free from defects in materials and workmanship for a period of five (5) years from the date of delivery to the end user, including coverage of light output, color stability, driver performance and fixture finish. See our full warranty

Replacement:

Replaces up to 70W Metal Halide.

Buy American Act Compliance:

RAB values USA manufacturing! Upon request, RAB may be able to manufacture this product to be compliant with the Buy American Act (BAA). Please contact customer service to request a quote for the product to be made BAA compliant.

Copyright © 2018 RAB Lighting Inc. All Rights Reserved Note: Specifications are subject to change at any time without notice

VANLED20

Dimensions

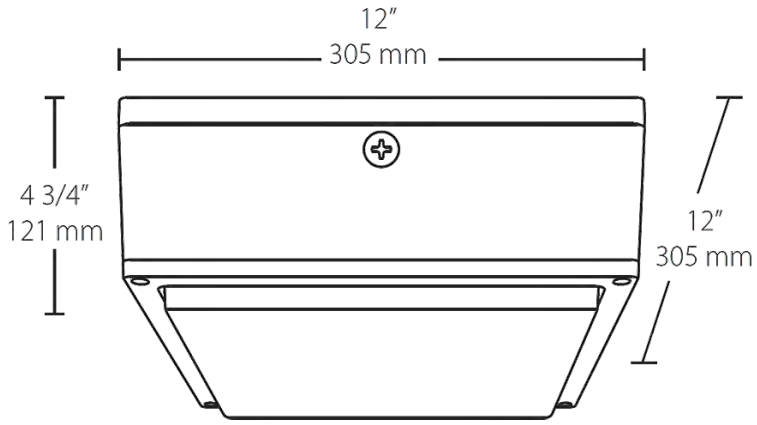

Features

- Fits the footprint of older canopy lights
- Vandal resistant and UV resistant lens
- Ultra-high efficiency
- Clean, contemporary, low-profile design
- Available with drop lens or flat lens
- IP66 rated, keeps dust, bugs and water out
- Photo and motion sensor options available

Ordering Matrix

Family	Wattage	Color Temp	Lens	Motion Sensor & Finish	Driver Options	Photocell Options
VANLED						
	10 = 10W **20** = 20W **40** = 40W **52** = 52W **65** = 65W **75** = 75W	**Blank** = 5000K (Cool) **N** = 4000K (Neutral) **Y** = 3000K (Warm)	**Blank** = Drop lens **F** = Flat lens **FR** = Frosted Drop Lens **FFR** = Frosted Flat Lens	**Blank** = Bronze, no sensor **W** = White, no sensor **MS** = Bronze w/ SMS500 mini-sensor (not available w/ D10 models) **MSW** = White w/ SMS500 mini-sensor (not available w/ D10 models)	**Blank** = On/Off driver **/D10** = 0-10V Dimming (not available for 10w) **/480** = 480V (not available for 10W or 20W) **/480/D10** = 480V w/ 0-10V dimming (not available for 10W or 20W)	**/PCS** = 120V Swivel **/PCS2** = 277V Swivel **/PCS4** = 480V Swivel

Copyright © 2018 RAB Lighting Inc. All Rights Reserved Note: Specifications are subject to change at any time without notice

VANLED40



Low-profile vandal-resistant fixture covers the footprint of most traditional canopy lights. Available in flat or drop lens with frosted and unfrosted options.

Color: Bronze Weight: 12.0 lbs

Project:	Type:
Prepared By:	Date:

Driver Info		LED Info	
Type:	Constant Current	Watts:	40W
120V:	0.60A	Color Temp:	5000K
208V:	0.19A	Color Accuracy:	78 CRI
240V:	0.17A	L70 Lifespan:	100000
277V:	0.14A	Lumens:	5095
Input Watts:	38W	Efficacy:	134 LPW
Efficiency:	N/A		

Technical Specifications

Listings

UL Listing:

Suitable for Wet Locations. Covered Ceiling Mount Only.

DLC Listed:

This product is listed by Design Lights Consortium (DLC) as an ultra-efficient premium product that qualifies for the highest tier of rebates from DLC Member Utilities.
DLC Product Code: PHYYBQJS

IESNA LM-79 & LM-80 Testing:

RAB LED luminaires have been tested by an independent laboratory in accordance with IESNA LM-79 and LM-80, and have received the Department of Energy "Lighting Facts" label.

Electrical

Driver:

Class 2, Constant Current, 100-277V, 50-60Hz, 1050mA

THD:

5.5% at 277V

Construction

Maximum Ambient Temperature:

Suitable for use in 40°C (104°F) ambient temperatures

Cold Weather Starting:

Minimum starting temperature is -40°C (-40°F)

Housing:

Die-cast aluminum housing and lens frame with (4) 1/2" NPS side conduit entries and weatherproof rear wire plug and access plate

Mounting:

Ceiling mount to recessed junction with knockout template or directy to ceiling surface, utilizing side conduit entry points.

IP Rating:

Ingress Protection rating of IP66 for dust and water

Lens:

Vandal-resistant polycarbonate textured opaque for low glare drop lens

Reflector:

Semi-specular, vacuum-metalized polycarbonate

Gaskets:

High-temperature silicone gaskets

Finish:

Our environmentally friendly polyester powder coatings are formulated for high-durability and long-lasting color.

Green Technology:

Mercury and UV free. RoHS compliant components. Polyester powder coat finish formulated without the use of VOC or toxic heavy metals.

LED Characteristics

LEDs:

Discreet LEDs on PCB board

Color Stability:

RAB LEDs exceed industry standards for chromatic stability.

Color Uniformity:

RAB's range of CCT (Correlated Color Temperature) follows the guidelines of the American National Standard for Specifications for the Chromaticity of Solid State Lighting (SSL) Products, ANSI C78.377-2017.

Other

Warranty:

RAB warrants that our LED products will be free from defects in materials and workmanship for a period of five (5) years from the date of delivery to the end user, including coverage of light output, color stability, driver performance and fixture finish. See our full warranty

Replacement:

Replaces up to 100W Metal Halide.

Buy American Act Compliance:

RAB values USA manufacturing! Upon request, RAB may be able to manufacture this product to be compliant with the Buy American Act (BAA). Please contact customer service to request a quote for the product to be made BAA compliant.

Copyright © 2018 RAB Lighting Inc. All Rights Reserved Note: Specifications are subject to change at any time without notice

VANLED40

Dimensions

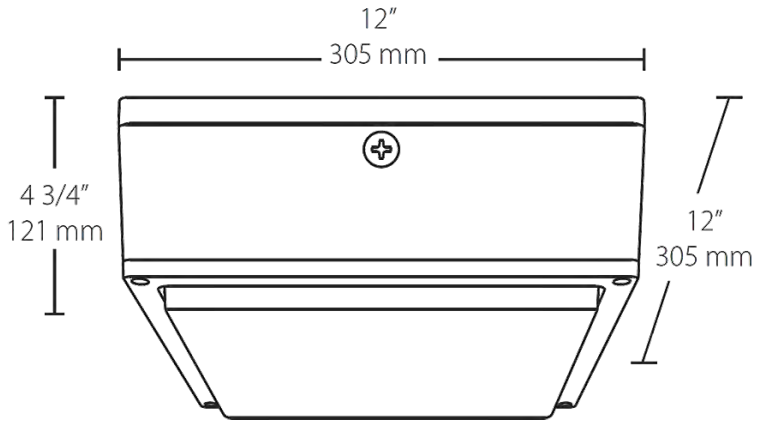

Features

- Fits the footprint of older canopy lights
- Vandal resistant and UV resistant lens
- Ultra-high efficiency
- Clean, contemporary, low-profile design
- Available with drop lens or flat lens
- IP66 rated, keeps dust, bugs and water out
- Photo and motion sensor options available

Ordering Matrix

Family	Wattage	Color Temp	Lens	Motion Sensor & Finish	Driver Options	Photocell Options
VANLED						
	10 = 10W **20** = 20W **40** = 40W **52** = 52W **65** = 65W **75** = 75W	**Blank** = 5000K (Cool) **N** = 4000K (Neutral) **Y** = 3000K (Warm)	**Blank** = Drop lens **F** = Flat lens **FR** = Frosted Drop Lens **FFR** = Frosted Flat Lens	**Blank** = Bronze, no sensor **W** = White, no sensor **MS** = Bronze w/ SMS500 mini-sensor (not available w/ D10 models) **MSW** = White w/ SMS500 mini-sensor (not available w/ D10 models)	**Blank** = On/Off driver **/D10** = 0-10V Dimming (not available for 10w) **/480** = 480V (not available for 10W or 20W) **/480/D10** = 480V w/ 0-10V dimming (not available for 10W or 20W)	**/PCS** = 120V Swivel **/PCS2** = 277V Swivel **/PCS4** = 480V Swivel

Copyright © 2018 RAB Lighting Inc. All Rights Reserved Note: Specifications are subject to change at any time without notice

VANLED52



Low-profile vandal-resistant fixture covers the footprint of most traditional canopy lights. Available in flat or drop lens with frosted and unfrosted options.

Color: Bronze

Weight: 12.0 lbs

Project:	Type:
Prepared By:	Date:

Driver Info

Type:	Constant Current
120V:	0.80A
208V:	0.26A
240V:	0.23A
277V:	0.20A
Input Watts:	53W
Efficiency:	99%

LED Info

Watts:	52W
Color Temp:	5000K
Color Accuracy:	78 CRI
L70 Lifespan:	100000
Lumens:	6647
Efficacy:	126 LPW

Technical Specifications

Listings

UL Listing:

Suitable for Wet Locations. Covered Ceiling Mount Only.

DLC Listed:

This product is on the Design Lights Consortium (DLC) Qualified Products List and is eligible for rebates from DLC Member Utilities.
DLC Product Code: PXKSK4YE

IESNA LM-79 & LM-80 Testing:

RAB LED luminaires have been tested by an independent laboratory in accordance with IESNA LM-79 and LM-80, and have received the Department of Energy "Lighting Facts" label.

Electrical

Driver:

Class 2, Constant Current, 100-277V, 50-60Hz, 1400mA

THD:

9.4% at 277V

Construction

Maximum Ambient Temperature:

Suitable for use in 40°C (104°F) ambient temperatures

Cold Weather Starting:

Minimum starting temperature is -40°C (-40°F)

Housing:

Die-cast aluminum housing and lens frame with (4) 1/2" NPS side conduit entries and weatherproof rear wire plug and access plate

Mounting:

Ceiling mount to recessed junction with knockout template or directy to ceiling surface, utilizing side conduit entry points.

IP Rating:

Ingress Protection rating of IP66 for dust and water

Lens:

Vandal-resistant polycarbonate textured opaque for low glare drop lens

Reflector:

Semi-specular, vacuum-metalized polycarbonate

Gaskets:

High-temperature silicone gaskets

Finish:

Our environmentally friendly polyester powder coatings are formulated for high-durability and long-lasting color.

Green Technology:

Mercury and UV free. RoHS compliant components. Polyester powder coat finish formulated without the use of VOC or toxic heavy metals.

LED Characteristics

LEDs:

Discreet LEDs on PCB board

Color Stability:

RAB LEDs exceed industry standards for chromatic stability.

Color Uniformity:

RAB's range of CCT (Correlated Color Temperature) follows the guidelines of the American National Standard for Specifications for the Chromaticity of Solid State Lighting (SSL) Products, ANSI C78.377-2017.

Other

Warranty:

RAB warrants that our LED products will be free from defects in materials and workmanship for a period of five (5) years from the date of delivery to the end user, including coverage of light output, color stability, driver performance and fixture finish. See our full warranty

Replacement:

Replaces up to 150W Metal Halide.

Buy American Act Compliance:

RAB values USA manufacturing! Upon request, RAB may be able to manufacture this product to be compliant with the Buy American Act (BAA). Please contact customer service to request a quote for the product to be made BAA compliant.

Copyright © 2018 RAB Lighting Inc. All Rights Reserved Note: Specifications are subject to change at any time without notice

VANLED52

Dimensions

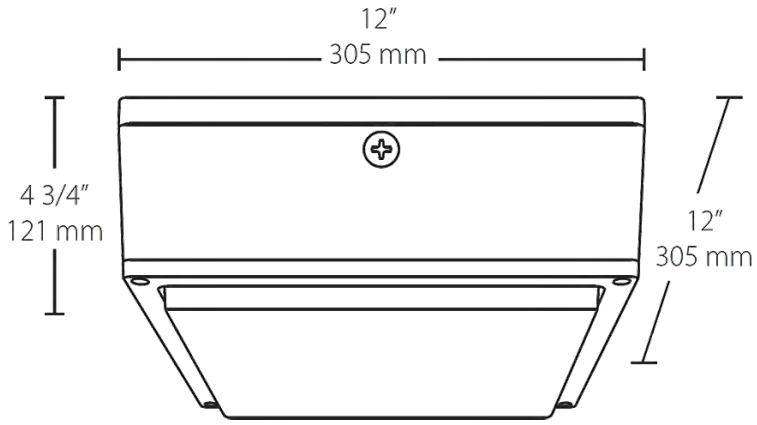

Features

- Fits the footprint of older canopy lights
- Vandal resistant and UV resistant lens
- Ultra-high efficiency
- Clean, contemporary, low-profile design
- Available with drop lens or flat lens
- IP66 rated, keeps dust, bugs and water out
- Photo and motion sensor options available

Ordering Matrix

Family	Wattage	Color Temp	Lens	Motion Sensor & Finish	Driver Options	Photocell Options
VANLED						
	10 = 10W **20** = 20W **40** = 40W **52** = 52W **65** = 65W **75** = 75W	**Blank** = 5000K (Cool) **N** = 4000K (Neutral) **Y** = 3000K (Warm)	**Blank** = Drop lens **F** = Flat lens **FR** = Frosted Drop Lens **FFR** = Frosted Flat Lens	**Blank** = Bronze, no sensor **W** = White, no sensor **MS** = Bronze w/ SMS500 mini-sensor (not available w/ D10 models) **MSW** = White w/ SMS500 mini-sensor (not available w/ D10 models)	**Blank** = On/Off driver **/D10** = 0-10V Dimming (not available for 10w) **/480** = 480V (not available for 10W or 20W) **/480/D10** = 480V w/ 0-10V dimming (not available for 10W or 20W)	**/PCS** = 120V Swivel **/PCS2** = 277V Swivel **/PCS4** = 480V Swivel

Copyright © 2018 RAB Lighting Inc. All Rights Reserved Note: Specifications are subject to change at any time without notice

VTU

Date:_____
Type:_____
Project:_____

General Description:

The VTU fixture is fully weatherproof fixture is designed for use in areas that are known to be subjected to moisture from either natural causes or intent. This fixture is both waterproof and corrosion resistant. The VTU is available with a wide variety of options.



VTU END VIEW

Features and Benefits:

- The housing exterior is designed from a single piece injection molded fiberglass/plastic blend.
- The waterproof seal is ensured by a neoprene gasket in conjunction with pressure locks around the housing.
- The interior gear tray unit is constructed of 23 gauge steel with a baked white enamel finish to ensure durability.
- Standard polycarbonate latches with stainless steel available as an option.
- All units include endplugs
- All units are furnished with a universal voltage UL Listed Class "P" thermally protected ballast.
- Meets or exceeds all requirements for UL Luminaire Standard #1598.
- Complies with National Energy Standards.

DIMENSIONS

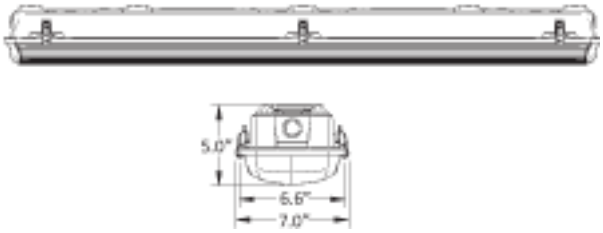

Application:

This fixture is both waterproof and corrosion resistant. Suitable uses for this fixture are car washes, parking garages, kitchens and many other applications. Its waterproof construction makes this fixture safe for hose down

Housing	Length	# of Lamps	Lamp Type	Ballast	Voltage	Options
VTU	**4'** **8'**	**1** **2** **3** **4** **6**	**F17T8** **F32 T8** **F96 T8** **F28 T5HO** **F54 T5HO**	***T8*** **NP** (0.88 BF) **LP** (0.77 BF) **HP** (1.18BF) ***T5HO*** **NP** (1.0 BF)	***T8*** **120** **277** **EBUNI** (Multi Volt) ***T5HO*** **EBUNI** (Multi Volt)	**PC** Polycarbonate OC Optically clear lens **REF** 86% Specular Reflector **DM** Dimming Ballast **EMB** Emergency Ballast **HB** Hanging Bracket **STS** Stainless Steel Latches

Notice: *Dimensions and specifications subject to change without notice.*
Consult factory for additional options and accessories.

5-C MARLEN DRIVE, HAMILTON, NJ 08691
PHONE: 609-587-7900 FAX: 609-613-5586
WWW.MONMOUTHLIGHTING.COM

VWF

Date:_____
Type:_____
Project:_____

General Description:
The VWF fixture is a wrap fixture that is designed to be ceiling or wall mounted. It is available with a wide variety of options and is ADA compliant.



VFW END VIEW

Features and Benefits:
- Housing is standard in heavy gauge die formed cold rolled steel, for strength and maximum heat dissipation.
- Finished in Baked white enamel or post powder coat for maximum reflectivity and durability.
- End plates secure the lens to the fixture with acorn nuts.
- Socket plates are riveted to the housing, adding structural support to the assembly.
- All units are stamped with 7/8" knock-outs in the back/top and includes access plates.
- Standard lens is prismatic acrylic pattern 12, which provides uniform light distribution.
- All units are furnished with a universal voltage UL Listed Class "P" thermally protected ballast.
- Meets or exceeds all requirements for UL Luminaire Standard #1598.
- Complies with National Energy Standards.

DIMENSIONS

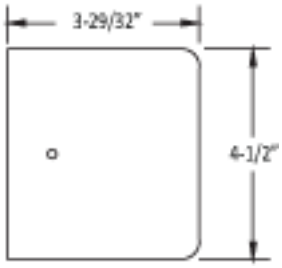

Application:
It is best used in corridors, classrooms, stairwells, hospital rooms, and at work stations for task lighting. Pendant mounting is available as well, for those that wish for a distinctive look.

Housing	Length	# of Lamps	Lamp Type	Ballast	Voltage	Options
VWF	**2'** **4'** **8'**	**1** **2** **4**	**F32 T8** **F17T8** **F28T5** **F54 T5HO**	***T8*** **NP** (0.88 BF) **LP** (0.77 BF) **HP** (1.18BF) ***T5HO*** **NP** (1.0 BF)	***T8*** **120** **277** **EBUNI** (Multi Volt) ***T5HO*** **EBUNI** (Multi Volt)	**CD** Center Divider **CE** Chrome Ends **FB** Front Baffle **NL** Night Light **PS** Pull Chain Switch **RS** Rocker Switch **TP** Tamper Proof Screws **3W** 3 Way Switch **TS** Toggle Switch **WA** White Acrylic **PC** Polycarbonate Lens

Notice: *Dimensions and specifications subject to change without notice.*
Consult factory for additional options and accessories.

5-C MARLEN DRIVE, HAMILTON, NJ 08691
PHONE: 609-587-7900 FAX: 609-613-5586
WWW.MONMOUTHLIGHTING.COM

VXBRLED13DG



High performance, wall mount LED Vaporproof fixture. A classic design with cutting edge LED technology. Comes with die cast guard and frosted globe.

Color: Natural Weight: 5.0 lbs

Project:	Type:
Prepared By:	Date:

Driver Info		LED Info	
Type:	Constant Current	Watts:	13W
120V:	0.13A	Color Temp:	5000K
208V:	0.08A	Color Accuracy:	65 CRI
240V:	0.07A	L70 Lifespan:	100000
277V:	0.06A	Lumens:	729
Input Watts:	15W	Efficacy:	48 LPW
Efficiency:	86%		

Technical Specifications

LED Characteristics

Lifespan:

100,000-hour LED lifespan based on IES LM-80 results and TM-21 calculations.

Color Consistency:

3-step MacAdam Ellipse binning to achieve consistent fixture-to-fixture color.

Color Stability:

LED color temperature is warrantied to shift no more than 200K in CCT over a 5 year period.

Color Uniformity:

RAB's range of CCT (Correlated Color Temperature) follows the guidelines of the American National Standard for Specifications for the Chromaticity of Solid State Lighting (SSL) Products, ANSI C78.377-2017.

Construction

Globes and Guards:

Vaporproof LEDs are compatible with RAB Globes and Guards.

Construction:

Die cast aluminum housing and door. Tether connects back housing halves for safety.

Cold Weather Starting:

Minimum starting temperature is -40°C (-40°F)

Ambient Temperature:

Suitable for use in 35°C (95°F) ambient temperatures.

Housing:

Die cast aluminum housing and driver housing.

Mounting:

Three 1/2" NPS conduit entry points.

Guard and Globe:

Shot blasted guard with frosted globe.

Reflector:

High quality hydroformed semi-specular aluminum.

Gaskets:

High Temperature Silicone.

Finish:

Natural shot blasted aluminum.

Green Technology:

Mercury and UV free. RoHS compliant components. Polyester powder coat finish formulated without the use of VOC or toxic heavy metals.

Electrical

Driver:

Multi-chip single 13W high output long life LED Driver. Constant Current,100V-277V, 50/60 Hz., 100-240VAC.3-.15 Amps 277VAC.15 Amps. Will deliver 70% of its initial lumens at 100,000 hours based on LM-80 Tests.

Surge Protection:

4kV

Listings

IESNA LM-79 & IESNA LM-80 Testing:

RAB LED luminaires have been tested by an independent laboratory in accordance with IESNA LM-79 and 80, and have received the Department of Energy "Lighting Facts" label.

UL Listing:

UL Listed Suitable for Wet locations as a Downlight.

Other

Warranty:

RAB warrants that our LED products will be free from defects in materials and workmanship for a period of five (5) years from the date of delivery to the end user, including coverage of light output, color stability, driver performance and fixture finish.

Patents:

The VXBRLED design is protected by Taiwan Patent 01510951 and patents pending in the U.S., Canada, China and Mexico.

Equivalency:

Equivalent to 60W Incandescent or 23W CFL.

Buy American Act Compliance:

RAB values USA manufacturing! Upon request, RAB may be able to manufacture this product to be compliant with the Buy American Act (BAA). Please contact customer service to request a quote for the product to be made BAA compliant.

Optical

BUG Rating:

B0 U3 G1

Copyright © 2018 RAB Lighting Inc. All Rights Reserved Note: Specifications are subject to change at any time without notice

VXBRLED13DG

Dimensions

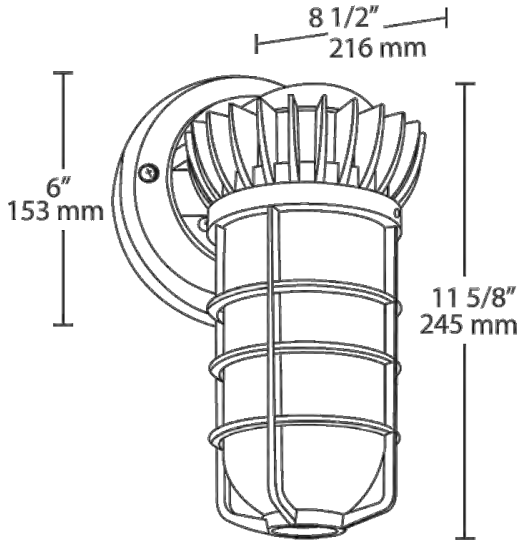

Features

- Vaporproof LED Wall Mount
- Superior Thermal Management (Patent Pending)
- All Die-Cast Aluminum Construction
- 100,000 hour life based on LM-80 tests
- Thermal Shock-Resistant Frosted Glass Globe
- Traditional Look, Cutting-Edge Technology
- 5-year LED warranty

Copyright © 2018 RAB Lighting Inc. All Rights Reserved Note: Specifications are subject to change at any time without notice

VXBRLED26DG



High performance 26W LED Vaporproof fixture. A classic design with cutting edge LED technology. Comes with die cast guard and frosted globe.

Color: Natural

Weight: 5.0 lbs

Project:	Type:
Prepared By:	Date:

Driver Info		LED Info	
Type:	Constant Current	Watts:	26W
120V:	0.25A	Color Temp:	4900K
208V:	0.14A	Color Accuracy:	68 CRI
240V:	0.13A	L70 Lifespan:	100000
277V:	0.11A	Lumens:	2004
Input Watts:	27W	Efficacy:	74 LPW
Efficiency:	96%		

Technical Specifications

Listings

UL Listing:

Suitable for wet locations as downlight.

IESNA LM-79 & LM-80 Testing:

RAB LED luminaires have been tested by an independent laboratory in accordance with IESNA LM-79 and LM-80, and have received the Department of Energy "Lighting Facts" label.

LED Characteristics

Lifespan:

100,000-hour LED lifespan based on IES LM-80 results and TM-21 calculations.

LED:

Multi-chip 26W high-output, long-life LED.

Color Consistency:

3-step MacAdam Ellipse binning to achieve consistent fixture-to-fixture color.

Color Stability:

LED color temperature is warrantied to shift no more than 200K in CCT over a 5 year period.

Color Uniformity:

RAB's range of CCT (Correlated Color Temperature) follows the guidelines of the American National Standard for Specifications for the Chromaticity of Solid State Lighting (SSL) Products, ANSI C38.377-2011.

Construction

Globes and Guards:

Vaporproof LEDs are compatible with RAB Globes and Guards.

Cold Weather Starting:

Minimum starting temperature is -40°C (-40°F)

Ambient Temperature:

SuitableFor use in 40°C (104°F) ambient temperatures.

Housing:

All die-cast aluminum construction.

Gaskets:

High temperature silicone.

Finish:

Natural shot blasted aluminum.

Mounting:

(3) 1/2" NPS conduit entry points.

Guard and Globe:

Shot blasted guard with frosted globe.

Green Technology:

Mercury and UV free. RoHS compliant components. Polyester powder coat finish formulated without the use of VOC or toxic heavy metals.

Electrical

Driver:

Constant Current, 100V-277V, 50/60 Hz, 0.48 Amp, Power Factor 97.9%.

Other

Patents:

The design of the LVAPOR is protected by the following patents US pat. pending; D651738 CN ZL201230040341.3; ZL201130028360.X, TW pat. 101301367 MX 35699; pat. pending CA.

Warranty:

RAB warrants that our LED products will be free from defects in materials and workmanship for a period of five (5) years from the date of delivery to the end user, including coverage of light output, color stability, driver performance and fixture finish.

Buy American Act Compliance:

RAB values USA manufacturing! Upon request, RAB may be able to manufacture this product to be compliant with the Buy American Act (BAA). Please contact customer service to request a quote for the product to be made BAA compliant.

Copyright © 2018 RAB Lighting Inc. All Rights Reserved Note: Specifications are subject to change at any time without notice

VXBRLED26DG

Dimensions

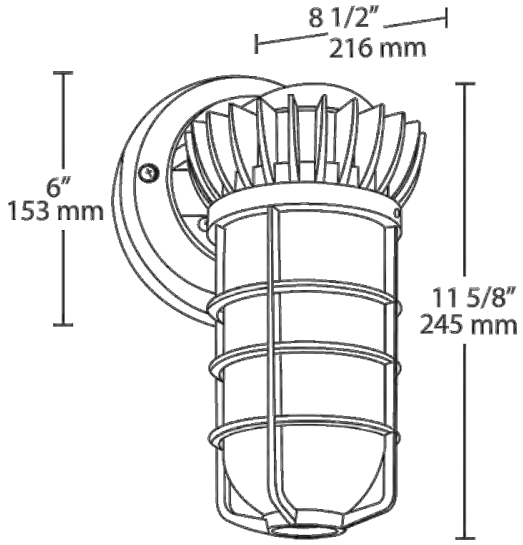

Features

- Superior Thermal Management (Patent Pending)
- All Die-Cast Aluminum Construction
- 100,000 hour life based on LM-80 tests
- Thermal Shock-Resistant Frosted Glass Globe
- Traditional Look, Cutting-Edge Technology
- 5-year LED warranty

Copyright © 2018 RAB Lighting Inc. All Rights Reserved Note: Specifications are subject to change at any time without notice

LED Wet Location S14
Non-Dimmable

Perfect for applications with hard to reach areas, vibration, and frequent starts.

Limitless options for the following applications:

- Chandeliers
- Ceiling Fans
- Decorative
- Indoor Fixtures
- Outdoor Fixtures
- Scoreboards
- Movie Signs

Great features and benefits:

- Long Life: 25,000 hours—no more bulb replacements
- Excellent white color consistency from bulb to bulb
- UL approved for wet locations
- Wet location to replace cold cathodes

Wet Location S14 lamps are non-dimmable



S14 Clear



S14 Frosted

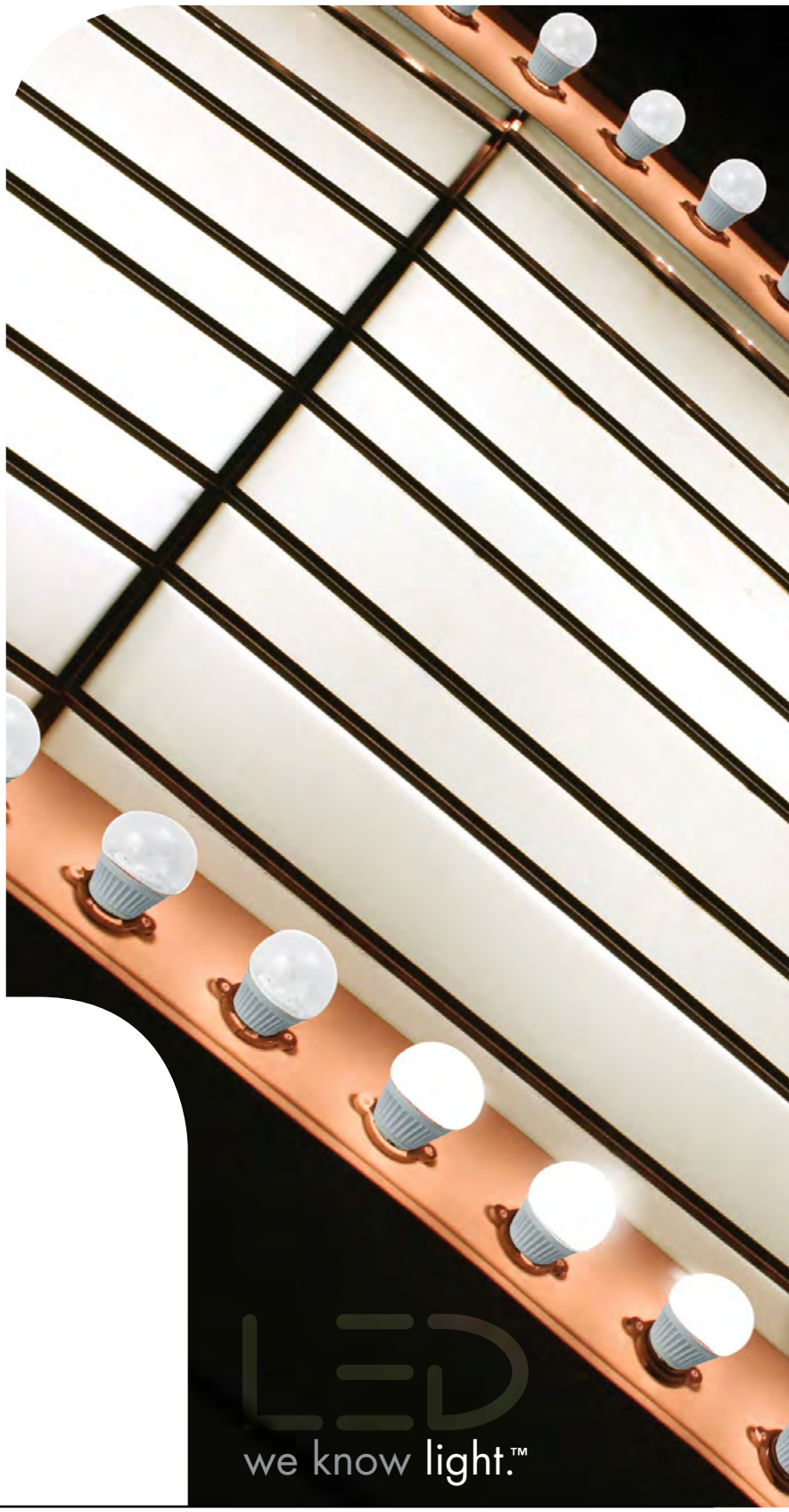

TCP®
325 Campus Dr. | Aurora, Ohio 44202 | P: 800-324-1496 | tcpi.com
©TCP DEC 2016/WF30954

ENERGY STAR PARTNER

LED	25,000 hours average rated life, 120 volts

Catalog Number

Notes | Type



Applications

Ideal for decorative applications—suitable for outdoor fixtures
Also perfect for applications with hard to reach areas, vibration, and frequent starts

Accent and decorative lighting including:

- ✚ Chandeliers
- ✚ Ceiling Fans
- ✚ Decorative
- ✚ Indoor Fixtures
- ✚ Outdoor Fixtures
- ✚ Scoreboards
- ✚ Movie Signs

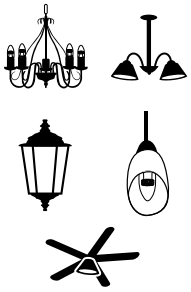

Light output equivalent to 40W
Cold cathode replacement

Features and Benefits

- Long Life: 25,000 hours—no more bulb replacements
- Excellent white color consistency from bulb to bulb
- UL approved for wet locations
- Wet location to replace cold cathodes

Wet Location S14 lamps are non-dimmable

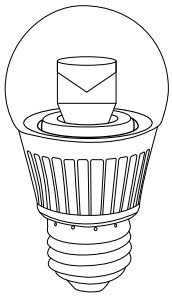

LED5E26S1427K

Specifications (at full brightness)

Input Line Voltage:	120VAC
Input Line Frequency	50/60HZ
Lamp Life (Rated)	25,000 hrs
Minimum Starting Temp	-30ºC
Maximum Operating Temp	40ºC
UL/cUL Listed	Yes
Power Factor	92%
CRI	80

Warranties and Certifications:	Item #	Description	Voltage	Wattage	Wattage Equivalent	M.O.L. (inches)	Diameter (inches)	Lumens	LPW	CCT	CRI
5 YEAR WARRANTY c UL us	LED5E26S1427K	LED 5W WET LOCATION S14 - 2700K	120	5.0	40W	3.8	1.4	300	60	2700K	80
	LED5E26S1430K	LED 5W WET LOCATION S14 - 3000K	120	5.0	40W	3.8	1.4	300	60	3000K	80
	LED5E26S1441K	LED 5W WET LOCATION S14 - 4100K	120	5.0	40W	3.8	1.4	300	60	4100K	80
	LED5E26S1427KF	LED 5W WET LOCATION S14 - 2700K Frosted	120	5.0	40W	3.8	1.4	300	60	2700K	80
	LED5E26S1430KF	LED 5W WET LOCATION S14 - 3000K Frosted	120	5.0	40W	3.8	1.4	300	60	3000K	80
	LED5E26S1441KF	LED 5W WET LOCATION S14 - 4100K Frosted	120	5.0	40W	3.8	1.4	300	60	4100K	80

For the most up-to-date specs, please visit www.tcpi.com

TCP®
325 Campus Dr. | Aurora, Ohio 44202 | P: 1-800-324-1496 | tcpi.com
©TCP MAR 2017/WF33300

ENERGY STAR PARTNER

WP2LED24



Affordable 37W and 24W LED wallpacks with traditional look. 100,000 hour L70 lifespan. 5-Year Warranty.

Color: Bronze

Weight: 9.6 lbs

Project:	Type:
Prepared By:	Date:

Driver Info		LED Info	
Type:	Constant Current	Watts:	24W
120V:	0.2A	Color Temp:	5000K
208V:	0.13A	Color Accuracy:	83 CRI
240V:	0.11A	L70 Lifespan:	100000
277V:	0.09A	Lumens:	2998
Input Watts:	25W	Efficacy:	122 LPW
Efficiency:	98%		

Technical Specifications

Listings

UL Listing:

Suitable for wet locations. Wall mount only.

IESNA LM-79 & LM-80 Testing:

RAB LED luminaires have been tested by an independent laboratory in accordance with IESNA LM-79 and LM-80, and have received the Department of Energy "Lighting Facts" label.

DLC Listed:

This product is on the Design Lights Consortium (DLC) Qualified Products List and is eligible for rebates from DLC Member Utilities.
DLC Product Code: P45YDNAR

Electrical

Driver:

Constant Current, Class 2, 450mA, 50/60 Hz. 100 - 277V, 4kV surge protection

Optical

BUG Rating:

B1 U3 G3

Construction

Thermal Management:

Superior thermal management with die-cast aluminum heatsink

Maximum Ambient Temperature:

Suitable for use in 40°C (104°F) ambient temperatures

Cold Weather Starting:

Minimum starting temperature is -40°C (-40°F)

Housing:

Precision die-cast aluminum housing.

Mounting:

Die-cast backbox with four (4) conduit entry points and knockout pattern for junction box or direct wall mounting. Hinged door for easy re-assembly.

Lens:

Prismatic, heat-resistant borosilicate glass

Reflector:

High-gloss white aluminum

Gaskets:

High-temperature silicone gaskets

Finish:

Formulated for high-durability and long lasting color.

Green Technology:

Mercury and UV free. RoHS compliant components. Polyester powder coat finish formulated without the use of VOC or toxic heavy metals.

LED Characteristics

Color Stability:

LED color temperature is warrantied to shift no more than 200K in CCT over a 5 year period.

Color Uniformity:

RAB's range of CCT (Correlated Color Temperature) follows the guidelines of the American National Standard for Specifications for the Chromaticity of Solid State Lighting (SSL) Products, ANSI C78.377-2017.

Other

Replacement:

Replaces 70W Metal Halide

Warranty:

RAB warrants that our LED products will be free from defects in materials and workmanship for a period of five (5) years from the date of delivery to the end user, including coverage of light output, color stability, driver performance and fixture finish. See our full warranty

Buy American Act Compliance:

RAB values USA manufacturing! Upon request, RAB may be able to manufacture this product to be compliant with the Buy American Act (BAA). Please contact customer service to request a quote for the product to be made BAA compliant.

Copyright © 2018 RAB Lighting Inc. All Rights Reserved Note: Specifications are subject to change at any time without notice

WP2LED24

Dimensions

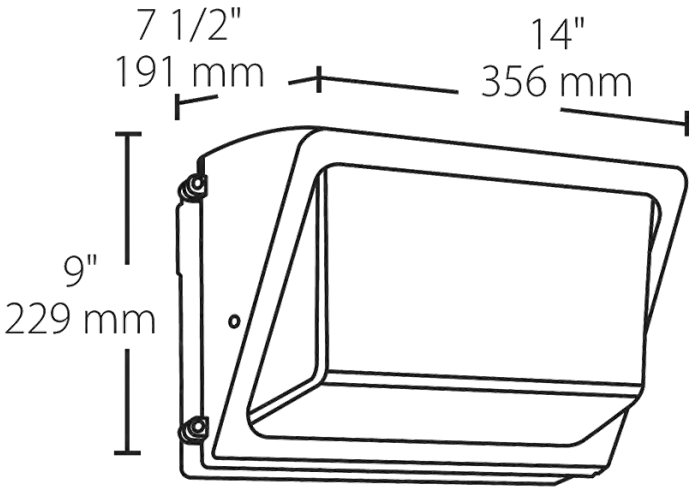

Features

- Covers footprint of traditional HID wallpacks
- WP2LED replaces up to 175W MH
- 100,000-Hour LED lifespan

Ordering Matrix

Family	Wattage	Color Temp	Finish	Driver Options	Photocell Options
WP2LED	24				
	37 = 37W **24** = 24W	**Blank** = 5000K (Cool) **N** = 4000K (Neutral) **Y** = 3000K (Warm)	**Blank** = Bronze **W** = White	**Blank** = 120-277V **/480** = 480V	**Blank** = No Option **/PC** = 120V Button **/PCS** = 120V Swivel **/PC2** = 277V Button **/PCS2** = 277V Swivel **/PCS4** = 480V Swivel

Copyright © 2018 RAB Lighting Inc. All Rights Reserved Note: Specifications are subject to change at any time without notice

WP2LED37



Affordable 37W and 24W LED wallpacks with traditional look. 100,000 hour L70 lifespan. 5-Year Warranty.

Color: Bronze

Weight: 9.6 lbs

Project:	Type:
Prepared By:	Date:

Driver Info		LED Info	
Type:	Constant Current	Watts:	37W
120V:	0.31A	Color Temp:	5000K
208V:	0.19A	Color Accuracy:	83 CRI
240V:	0.17A	L70 Lifespan:	100000
277V:	0.15A	Lumens:	4387
Input Watts:	37W	Efficacy:	118 LPW
Efficiency:	N/A		

Technical Specifications

Listings

UL Listing:

Suitable for wet locations. Wall mount only.

IESNA LM-79 & LM-80 Testing:

RAB LED luminaires have been tested by an independent laboratory in accordance with IESNA LM-79 and LM-80, and have received the Department of Energy "Lighting Facts" label.

DLC Listed:

This product is on the Design Lights Consortium (DLC) Qualified Products List and is eligible for rebates from DLC Member Utilities.
DLC Product Code: P163JKD4

Electrical

Driver:

Constant Current, Class 2, 450mA, 50/60 Hz. 100 - 277V, 4kV surge protection

Optical

BUG Rating:

B1 U4 G3

Construction

Maximum Ambient Temperature:

Suitable for use in 40°C (104°F) ambient temperatures

Cold Weather Starting:

Minimum starting temperature is -40°C (-40°F)

Housing:

Precision die-cast aluminum housing.

Mounting:

Die-cast backbox with four (4) conduit entry points and knockout pattern for junction box or direct wall mounting. Hinged door for easy re-assembly.

Lens:

Prismatic, heat-resistant borosilicate glass

Reflector:

High-gloss white aluminum

Gaskets:

High-temperature silicone gaskets

Finish:

Formulated for high-durability and long lasting color.

Green Technology:

Mercury and UV free. RoHS compliant components. Polyester powder coat finish formulated without the use of VOC or toxic heavy metals.

LED Characteristics

Color Stability:

LED color temperature is warrantied to shift no more than 200K in CCT over a 5 year period.

Color Uniformity:

RAB's range of CCT (Correlated Color Temperature) follows the guidelines of the American National Standard for Specifications for the Chromaticity of Solid State Lighting (SSL) Products, ANSI C78.377-2017.

Other

Replacement:

Replaces up to 175W Metal Halide.

Warranty:

RAB warrants that our LED products will be free from defects in materials and workmanship for a period of five (5) years from the date of delivery to the end user, including coverage of light output, color stability, driver performance and fixture finish. See our full warranty

Buy American Act Compliance:

RAB values USA manufacturing! Upon request, RAB may be able to manufacture this product to be compliant with the Buy American Act (BAA). Please contact customer service to request a quote for the product to be made BAA compliant.

Copyright © 2018 RAB Lighting Inc. All Rights Reserved Note: Specifications are subject to change at any time without notice

WP2LED37

Dimensions

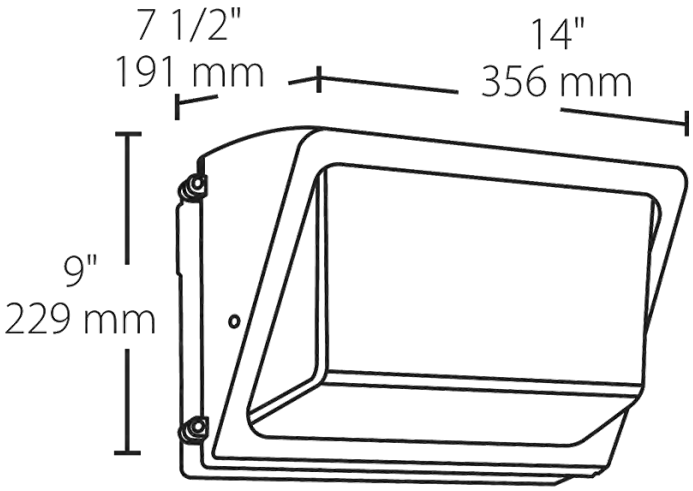

Features

- Covers footprint of traditional HID wallpacks
- WP2LED replaces up to 175W MH
- 100,000-Hour LED lifespan

Ordering Matrix

Family	Wattage	Color Temp	Finish	Driver Options	Photocell Options
WP2LED	37				
	37 = 37W **24** = 24W	**Blank** = 5000K (Cool) **N** = 4000K (Neutral) **Y** = 3000K (Warm)	**Blank** = Bronze **W** = White	**Blank** = 120-277V **/480** = 480V	**Blank** = No Option **/PC** = 120V Button **/PCS** = 120V Swivel **/PC2** = 277V Button **/PCS2** = 277V Swivel **/PCS4** = 480V Swivel

Copyright © 2018 RAB Lighting Inc. All Rights Reserved Note: Specifications are subject to change at any time without notice

WP3LED55



Available in 55W, 65W, 82W, and 110W models with up to 15,531 lumens and 144 LPW. Covered by RAB's 5-year no-compromise warranty.

Color: Bronze Weight: 16.8 lbs

Project:	Type:
Prepared By:	Date:

Driver Info

Type:	Constant Current
120V:	0.46A
208V:	0.29A
240V:	0.25A
277V:	0.22A
Input Watts:	57W
Efficiency:	96%

LED Info

Watts:	55W
Color Temp:	5000K
Color Accuracy:	82 CRI
L70 Lifespan:	100000
Lumens:	7026
Efficacy:	123 LPW

Technical Specifications

Listings

UL Listing:

Suitable for wet locations. Wall mount only.

IESNA LM-79 & LM-80 Testing:

RAB LED luminaires have been tested by an independent laboratory in accordance with IESNA LM-79 and LM-80, and have received the Department of Energy "Lighting Facts" label.

DLC Listed:

This product is on the Design Lights Consortium (DLC) Qualified Products List and is eligible for rebates from DLC Member Utilities.
DLC Product Code: PYA29GUW

Electrical

Driver:

Constant Current, Class 2, 1400mA, 50/60 Hz. 100 - 277V, 4kV surge protection

Optical

BUG Rating:

B1 U4 G4

Construction

Thermal Management:

Superior thermal management with die-cast aluminum heatsink

Maximum Ambient Temperature:

Suitable for use in 40°C (104°F) ambient temperatures

Cold Weather Starting:

Minimum starting temperature is -40°C (-40°F)

Housing:

Precision die-cast aluminum housing.

Mounting:

Die-cast backbox with four (4) conduit entry points and knockout pattern for junction box or direct wall mounting. Hinged door for easy re-assembly.

Lens:

Prismatic, heat-resistant borosilicate glass

Reflector:

High-gloss white aluminum

Gaskets:

High-temperature silicone gaskets

Finish:

Formulated for high-durability and long lasting color.

Green Technology:

Mercury and UV free. RoHS compliant components. Polyester powder coat finish formulated without the use of VOC or toxic heavy metals.

LED Characteristics

Color Stability:

LED color temperature is warrantied to shift no more than 200K in CCT over a 5 year period.

Color Uniformity:

RAB's range of CCT (Correlated Color Temperature) follows the guidelines of the American National Standard for Specifications for the Chromaticity of Solid State Lighting (SSL) Products, ANSI C78.377-2017.

Other

Buy American Act Compliance:

RAB values USA manufacturing! Upon request, RAB may be able to manufacture this product to be compliant with the Buy American Act (BAA). Please contact customer service to request a quote for the product to be made BAA compliant.

Copyright © 2018 RAB Lighting Inc. All Rights Reserved Note: Specifications are subject to change at any time without notice

WP3LED55

Dimensions

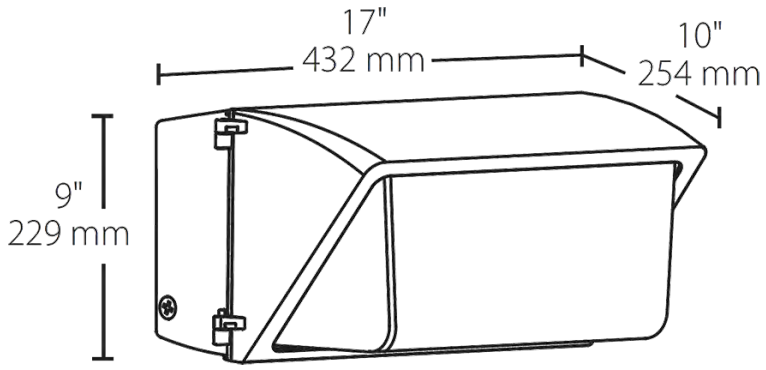

Features

- Affordable wallpack with traditional look
- Covers footprint of traditional HID wallpacks
- Optional photocell (button or swivel) available
- 480V models available

Ordering Matrix

Family	Wattage	Color Temp	Finish	Driver Options	Photocell Options
WP3LED	55				
	82 = 82W **65** = 65W **55** = 55W	**Blank** = 5000K (Cool) **Y** = 3000K (Warm) **N** = 4000K (Neutral)	**Blank** = Bronze **W** = White	**Blank** = 120-277V **/480** = 480V	**Blank** = No Option **/PC** = 120V Button **/PCS** = 120V Swivel **/PC2** = 277V Button **/PCS2** = 277V Swivel **/PCS4** = 480V Swivel **/PCT4** = 480V Twistlock

Copyright © 2018 RAB Lighting Inc. All Rights Reserved Note: Specifications are subject to change at any time without notice

WPTLED12/D10/PC2



High performance LED tallpack. Covers footprint of most HID Tallpacks. Vandal resistant lens. Precision die-cast aluminum. 0-10V dimmable driver with 120-277V photocell.

Color: Bronze

Weight: 6.5 lbs

Project:	Type:
Prepared By:	Date:

Driver Info		LED Info	
Type:	Constant Current	Watts:	12W
120V:	0.108A	Color Temp:	5000K
208V:	0.068A	Color Accuracy:	74 CRI
240V:	0.059A	L70 Lifespan:	100000
277V:	0.053A	Lumens:	1371
Input Watts:	13W	Efficacy:	102 LPW
Efficiency:	89%		

Technical Specifications

Listings

UL Listing:

Suitable for wet locations. Wall mount only.

IESNA LM-79 & LM-80 Testing:

RAB LED luminaries have been tested by an independent laboratory in accordance with IESNA LM-79 and LM-80, and have been received the Department of Energy "Lighting Facts" label.

LED Characteristics

Lifespan:

100,000-hour LED lifespan based on IES LM-80 results and TM-21 calculations.

LEDs:

Long-life, high-efficiency surface mounting LEDs

Color Stability:

LED color temperature is warrantied to shift no more than 200K in CCT over a 5 year period.

Color Uniformity:

RAB's range of CCT (Correlated Color Temperature) follows the guidelines of the American National Standard for Specifications for the Chromaticity of Solid State Lighting (SSL) Products, ANSI C78.377-2017.

Electrical

Drivers:

Constant Current, Class 2, 300mA, 100-277V, 50-60Hz, 120V: 0.108A, 208V: 0.068A, 240V: 0.059A, 277V: 0.053A, Surge Protection: 6kV

Power Factor:

98.6% at 120V, 90.8% at 277V

THD:

13.6% at 120V, 14.4% at 277V

Dimming Driver:

0-10V dimming driver standard for ultimate flexibility. Use as on/off or utilize the 0-10V DC dimming circuit for controls.

Photocell:

Photocell is rated for 120V thru 277V. To disable, simply use the provide silicone rubber cap and cover.

Optical

BUG Rating:

B0 U3 G2

Construction

Ambient Temperature:

Suitable for -40°C (-40°F) to 40°C (104°F) ambient temperatures

Cold Weather Starting:

Minimum starting temperature is -40°C (-40°F)

Thermal Management:

Superior thermal management with die-cast aluminum heatsink

Housing:

Precision die-cast aluminum.

Refractor Lens:

High-impact, diffuse, UV-stabilized polycarbonate

Mounting:

Three (3) 1/2" NPS conduit entry points (2 sides for through-feed, and bottom), and drilling template for easy wall box mounting.

Reflector:

High-gloss white aluminum.

Gaskets:

High-temperature silicone gaskets

Finish:

Formulated for high-durability and long lasting color.

Green Technology:

Mercury and UV free. RoHS compliant components. Polyester powder coat finish formulated without the use of VOC or toxic heavy metals.

Other

Equivalency:

Equivalent to 50W Metal Halide/35W HPS.

Warranty:

RAB warrants that our LED products will be free from defects in materials and workmanship for a period of five (5) years from the date of delivery to the end user, including coverage of light output, color stability, driver performance and fixture finish.

Patents:

The design of WPTLED is protected by patents pending in US, Canada, China, Taiwan and Mexico.

Buy American Act Compliance:

RAB values USA manufacturing! Upon request, RAB may be able to manufacture this product to be compliant with the Buy American Act (BAA). Please contact customer service to request a quote for the product to be made BAA compliant.

Copyright © 2018 RAB Lighting Inc. All Rights Reserved Note: Specifications are subject to change at any time without notice

WPTLED12/D10/PC2

Dimensions

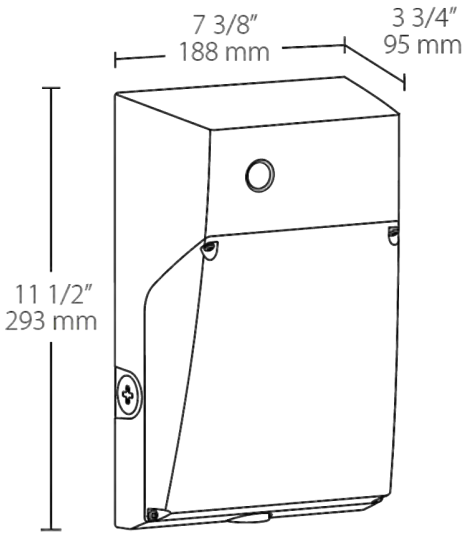

Features

- Covers footprints of most HID tallpacks
- 0-10V dimmable driver & 120 - 277V photocell
- Vandal-resistant lens
- 100,000-Hour LED lifespan

Ordering Matrix

Family	Wattage	Color Temp	Finish	Dimming	Photocell
WPTLED	12			/D10	/PC2
	12 = 12W **25** = 25W **40** = 40W	**Blank** = 5000K (Cool) **Y** = 3000K (Warm) **N** = 4000K (Neutral)	**Blank** = Bronze **W** = White	**/D10** = Dimmable	**/PC2** = 120-277V Photocell

Copyright © 2018 RAB Lighting Inc. All Rights Reserved Note: Specifications are subject to change at any time without notice

YBLED26/PCT



High output 26W LED yardblaster delivers enough light to hit the broad side of a barn. Replaces 175W mercury vapor and 150W HPS barn lights. Durable finish withstands harsh environments.

Color: Silver gray

Weight: 6.9 lbs

Project:	Type:
Prepared By:	Date:

Driver Info

Type:	Constant Current
120V:	0.25A
208V:	0.16A
240V:	0.14A
277V:	0.12A
Input Watts:	28W
Efficiency:	93%

LED Info

Watts:	26W
Color Temp:	5000K
Color Accuracy:	67 CRI
L70 Lifespan:	100000
Lumens:	2689
Efficacy:	96 LPW

Technical Specifications

Electrical

Photocell:

120-277V twistlock photocell included. Photocell is compatible with 120-277V.

Driver:

Constant Current, 120V, 50/60 Hz, 700mA, 120V: 0.6A

Power Factor:

99.3% at 120V, 92.5% at 277V

THD:

7.0% at 120V, 10.0% at 277V

Surge Protection:

2kV

Listings

UL Listing:

Suitable for wet locations

IESNA LM-79 & LM-80 Testing:

RAB LED luminaires have been tested by an independent laboratory in accordance with IESNA LM-79 and LM-80, and have received the Department of Energy "Lighting Facts" label.

LED Characteristics

LEDs:

Multi-chip, high-output, long-life LED

Lifespan:

100,000-hour LED lifespan based on IES LM-80 results and TM-21 calculations

Color Stability:

LED color temperature is warrantied to shift no more than 200K in CCT over a 5 year period.

Color Uniformity:

RAB's range of CCT (Correlated Color Temperature) follows the guidelines of the American National Standard for Specifications for the Chromaticity of Solid State Lighting (SSL) Products, ANSI C78.377-2017.

Construction

Cold Weather Starting:

Minimum starting temperature is -40°C (-40°F)

Housing:

Precision die-cast aluminum housing and arm

Mounting:

Mounts on wall or existing arm/pole YARM24 (1 5/8" diameter pipe).

Effective Projected Area:

EPA = 0.3

Recommended Mounting Height:

15 ft.

Lens:

High-impact, frosted polycarbonate lens

Reflector:

High-reflectance white paint

Gaskets:

High-temperature silicone

Finish:

Our environmentally friendly polyester powder coatings are formulated for high-durability and long-lasting color.

Green Technology:

Mercury and UV free. RoHS compliant components. Polyester powder coat finish formulated without the use of VOC or toxic heavy metals.

Other

Patents:

The design of YBLED26 is protected by patents pending in US, Canada, China, Taiwan and Mexico.

Warranty:

RAB warrants that our LED products will be free from defects in materials and workmanship for a period of five (5) years from the date of delivery to the end user, including coverage of light output, color stability, driver performance and fixture finish.

Replacement:

Replaces 175W mercury vapor and 150W HPS.

Buy American Act Compliance:

RAB values USA manufacturing! Upon request, RAB may be able to manufacture this product to be compliant with the Buy American Act (BAA). Please contact customer service to request a quote for the product to be made BAA compliant.

Optical

BUG Rating:

B1 U2 G1

Copyright © 2018 RAB Lighting Inc. All Rights Reserved Note: Specifications are subject to change at any time without notice

YBLED26/PCT

Dimensions

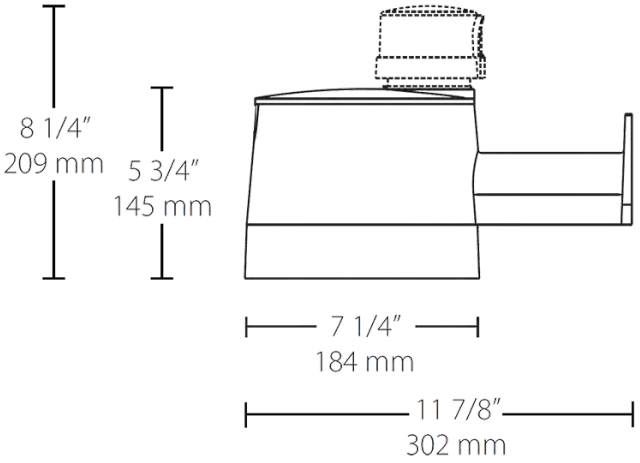

Features

- Replaces 175W mercury vapor and 150W HPS barn lights
- Widespread light distribution illuminates large areas
- Vandal-resistant
- High-impact polycarbonate lens
- Rugged die-cast aluminum housing withstands harsh environments
- Integrated dusk to dawn photocell
- 100,000-hour LED lifespan

Ordering Matrix

Family	Wattage	Color Temp	Mounting	Options
YBLED	26			/PCT
	26 = 26W	**Blank** = 5000K (Cool) **Y** = 3000K (Warm) **N** = 4000K (Neutral)	**Blank** = Wall **/ARM** = Arm	**Blank** = No Option **/PCT** = 120-277V Twistlock

Copyright © 2018 RAB Lighting Inc. All Rights Reserved Note: Specifications are subject to change at any time without notice

EQUIPMENT CUTSHEETS

BUILDING ENVELOPE

©2013 Energy Systems Group, LLC

Door Sweeps

Brush weatherseals are ideal for sealing the irregular surfaces of thresholds at door bottoms, conforming to the surface while not impairing the door's movements. Select the right brush and holder, based on the size of the gap to be sealed and the desired appearance of the holder.

Sealeze Nylon Therm-L-Brush up to 4 inches long are UL labeled for use on 3-hour fire doors.

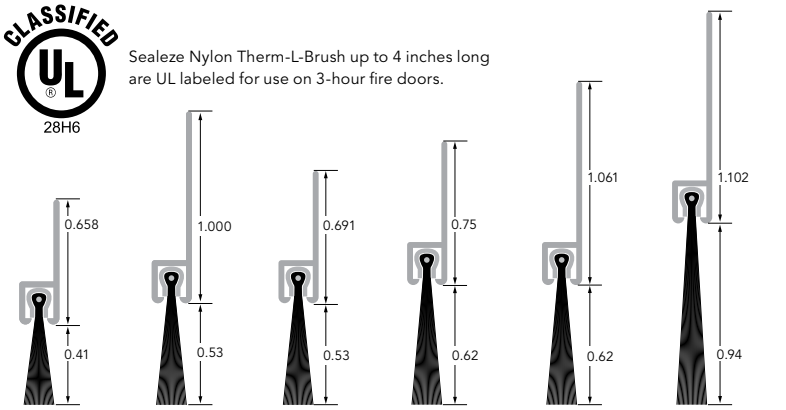

A180CLA04BL
A180DUR04BL
A180GLD04BL

B210CLA05BL
B210DUR05BL

B280CLA05BL

C380CLA06BL
C380DUR06BL
C380GLD06BL

C381CLA06BL

D480CLA09BL
D480DUR09BL

Product Code	Brush Length	Holder Length	Stock Length (feet)
A180CLA04BL	0.41	0.658	7, 8, 10
A180DUR04BL	0.41	0.658	7, 10
A180GLD04BL	0.41	0.658	10
B210CLA05BL	0.53	1.000	3, 7, 10
B210DUR05BL	0.53	1.000	10
B280CLA05BL	0.53	0.691	10
C380CLA06BL	0.62	0.750	3, 7, 10
C380DUR06BL	0.62	0.750	10
C380GLD06BL	0.62	0.750	12
C381CLA06BL	0.62	1.061	8, 10
D480CLA09BL	0.94	1.102	3, 7, 8, 9, 10, 12
D480DUR09BL	0.94	1.102	8, 10, 12

Door Sweep Kits

Aluminum door sweeps in both clear and duranodic finish with black brush are the perfect complement to their corresponding door jamb seals. The aluminum holders are pre-slotted for ease of installation and sweeps are prepackaged with fasteners for 3 ft., 3.5 ft. and 4 ft. doors.

Kit Product Code	Brush Length*	Door Bottom Width (feet)
A180CLA04BL3	0.41	3
A180CLA04BL3.5	0.41	3.5
A180CLA04BL4	0.41	4
A180DUR04BL3	0.41	3
A180DUR04BL3.5	0.41	3.5
A180DUR04BL4	0.41	4
A180GLD04BL3	0.41	3
A180GLD04BL3.5	0.41	3.5
A180GLD04BL4	0.41	4
B210CLA05BL3	0.53	3

Kit Product Code	Brush Length*	Door Bottom Width (feet)
B210CLA05BL3.5	0.53	3.5
B210CLA05BL4	0.53	4
B210DUR05BL3	0.53	3
B210DUR05BL3.5	0.53	3.5
B210DUR05BL4	0.53	4
C380CLA06BL3	0.62	3
C380CLA06BL3.5	0.62	3.5
C380CLA06BL4	0.62	4
C380DUR06BL3	0.62	3
C380DUR06BL3.5	0.62	3.5

Kit Product Code	Brush Length*	Door Bottom Width (feet)
C380DUR06BL4	0.62	4
C380GLD06BL3	0.62	3
C380GLD06BL3.5	0.62	3.5
C380GLD06BL4	0.62	4
D480CLA09BL3	0.94	3
D480CLA09BL3.5	0.94	3.5
D480CLA09BL4	0.94	4
D480DUR09BL3	0.94	3
D480DUR09BL3.5	0.94	3.5
D480DUR09BL4	0.94	4

**All products are available in different brush lenghts. Call for assistance with your special application.*

How to Select the Right Door Sweep

What size gap are you sealing?	Look at these items:
Up to ⅜"	Starting with the letter "A"
Up to ½"	Starting with the letter "B"
Up to 9⁄16"	Starting with the letter "C"
Up to 1"	Starting with the letter "D"
What color should the holder be?	Look at these items:
Clear Satin (silver in color)	Items with the letters "CLA" in the middle
Bronze (dark brown in color)	Items with the letters "DUR" in the middle
Polished Brass (gold in color)	Items with the letters "GLD" in the middle

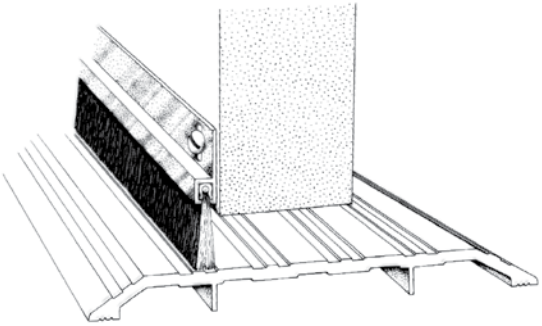

All dimensions in inches, unless otherwise indicated.
Dimensions are to Sealeze manufacturing tolerances. Contact us for more information on tolerances.

Light Duty

Light-duty brush seals are ideal for residential and commercial sectional doors.
JR40 and J140 are available in kits for 9 X 7 ft. and 16 X 7 ft. garage doors.

Product Code	Brush Length	Holder Length	Holder Angle
JR40CLA08BL	0.75	0.375	40°
JR40CLA10BL	1.00	0.375	40°
J140CLA08BL	0.75	0.750	40°
J140DUR08BL	0.75	0.750	40°
J140CLA10BL	1.00	0.750	40°
J140DUR10BL	1.00	0.750	40°
B230CLA10BL	1.00	0.862	30°
B210CLA10BL	1.00	1.000	180°
B210DUR10BL	1.00	1.000	180°
C380CLA10BL	1.00	0.750	180°
C380DUR10BL	1.00	0.750	180°
C380GLD10BL	1.00	0.750	180°

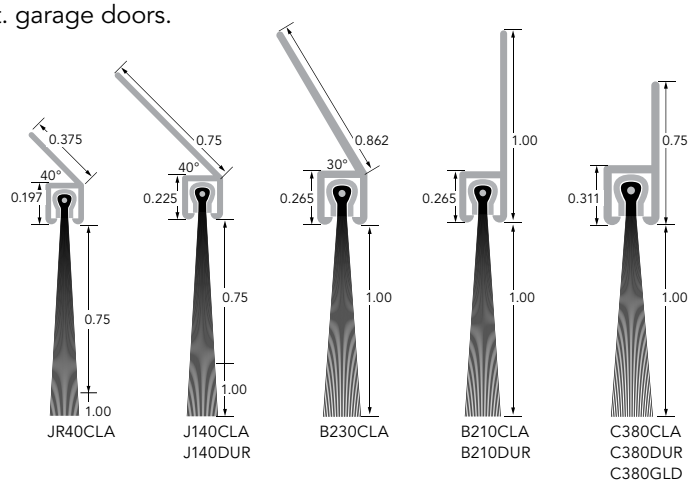

Standard Duty

Standard duty brush seals are the perfect seal for all sectional, rolling steel, and other service doors. Sealeze "D" series is synonymous with quality, energy-saving and value. Available in brush lengths from 1 to 3 inches.

Product Code	Brush Length	Holder Length	Holder Angle
D480CLA09BL	0.94	1.102	180°
D480DUR09BL	0.94	1.102	180°
D480CLA12BL	1.19	1.102	180°
D480DUR12BL	1.19	1.102	180°
D480CLA16BL	1.61	1.102	180°
D480DUR16BL	1.61	1.102	180°
D480CLA20BL	2.00	1.102	180°
D480DUR20BL	2.00	1.102	180°
D480CLA30BL	3.00	1.102	180°
D480DUR30BL	3.00	1.102	180°
D482CLA09BL	0.94	1.891	180°
D482CLA12BL	1.19	1.891	180°
D482CLA16BL	1.61	1.891	180°
D482CLA20BL	2.00	1.891	180°
D482CLA30BL	3.00	1.891	180°
D483CLA09BL	0.94	3.391	180°
D483CLA12BL	1.19	3.391	180°
D483CLA16BL	1.61	3.391	180°
D483CLA20BL	2.00	3.391	180°
D483CLA30BL	3.00	3.391	180°
D445CLA09BL	0.94	0.844	45°
D445DUR09BL	0.94	0.844	45°
D445CLA12BL	1.19	0.844	45°
D445DUR12BL	1.19	0.844	45°
D445CLA16BL	1.61	0.844	45°
D445DUR16BL	1.61	0.844	45°
D445CLA20BL	2.00	0.844	45°
D445DUR20BL	2.00	0.844	45°
D445CLA30BL	3.00	0.844	45°
D445DUR30BL	3.00	0.844	45°
D45XCLA09BL	0.94	1.890	45°
D45XCLA12BL	1.19	1.890	45°
D45XCLA16BL	1.61	1.890	45°
D45XCLA20BL	2.00	1.890	45°
D45XCLA30BL	3.00	1.890	45°
D45RCLA09BL	0.94	1.000	45° REV
D45RCLA12BL	1.19	1.000	45° REV
D45RCLA16BL	1.61	1.000	45° REV
D45RCLA20BL	2.00	1.000	45° REV
D45RCLA30BL	3.00	1.000	45° REV

Sealeze nylon Therm-L-Brush up to 4 inches long are UL labeled for use on 3-hour fire doors.

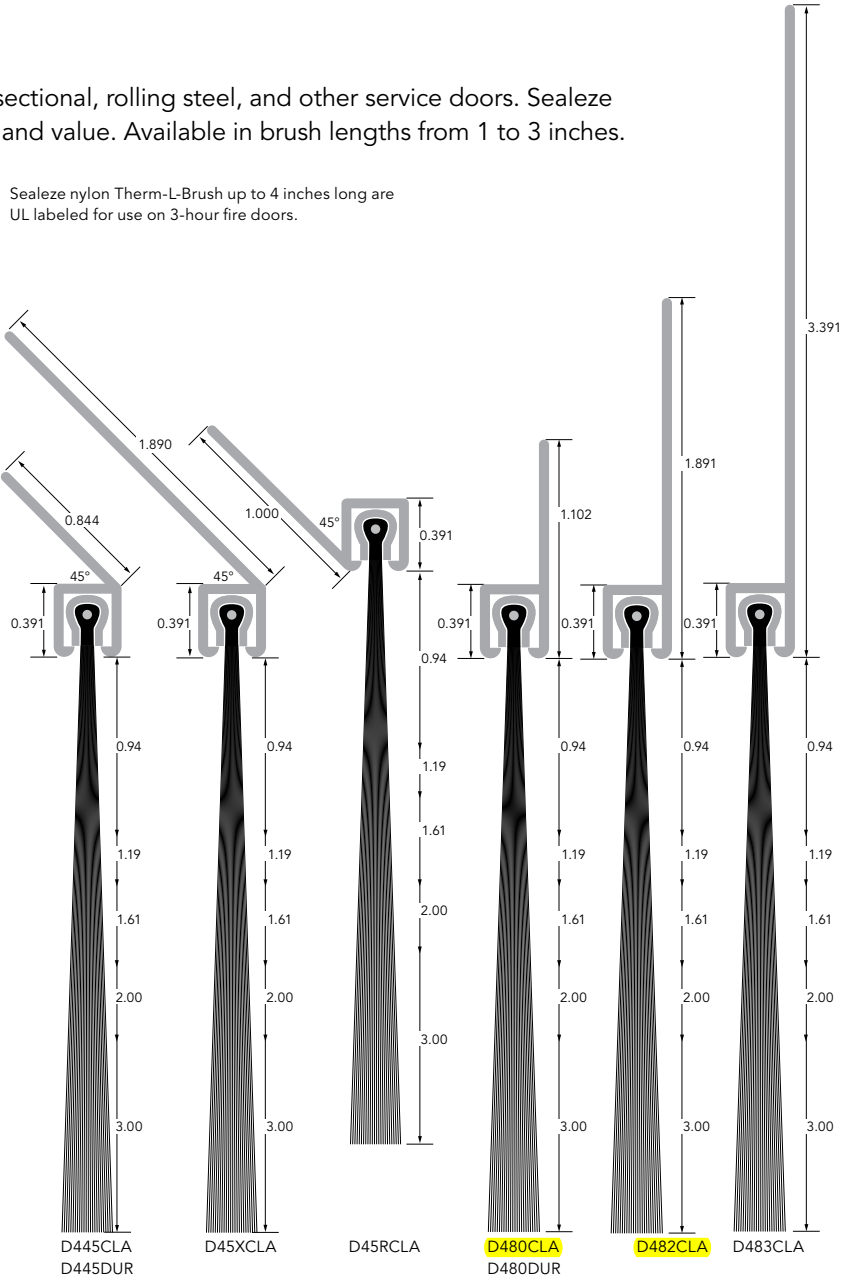

All dimensions in inches, unless otherwise indicated.
Dimensions are to Sealeze manufacturing tolerances. Contact us for more information on tolerances.

DS080 - Light Duty (Rounded) Door Weatherstripping

Construction: PVC rigid vinyl. Mitered corners ensure a secure fit with slotted mounting holes for easy adjustment.
Insert: 1/4" flexible, bubble type neoprene or vinyl insert.
Finish: Brown or white finish.
Set: 1-3' piece and 2-7' pieces. Custom lengths also available.

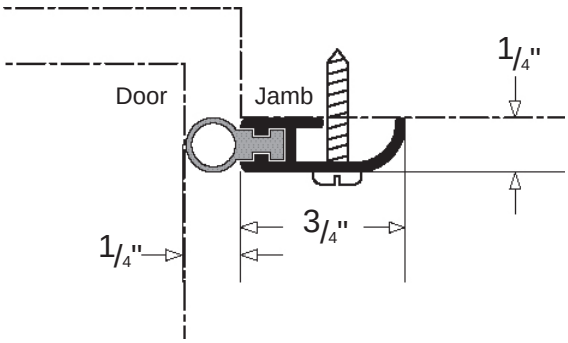

DS080-AL-V

MODEL	DESCRIPTION	FINISH		INSERT	
DS075	Door Weatherstripping	BR	Brown	V	Vinyl
		WH	White		

DS050 - Door Weatherstripping

Construction Q-Lon: Extruded aluminum. Mitered corners ensure a secure fit with slotted mounting holes for easy adjustment.
Insert: Soft cell foam insert. Foam has thermoplastic cover and will not deteriorate.
Finish: Aluminum, brown or white finish.
Set: 1-3' piece and 2-7' pieces. Custom lengths also available.

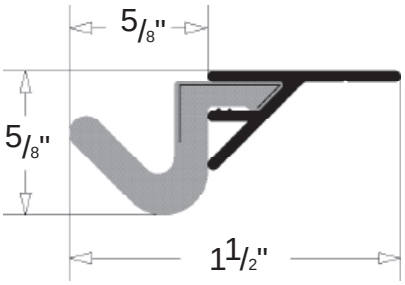

DS050-AL

MODEL	DESCRIPTION	FINISH	
DS100	Door Weatherstripping	AL	Aluminum
		BR	Brown
		WH	White

**Q-Lon is replaceable without removing holder from the door.*
**Approved for Sound Abatement Program.*

Kerf Q-LON® Door Seals

QEBD-500

Kerf Width: .125" (3.2mm)
Reach: .512" (13.0mm)

QDS-650

Kerf Width: .125" (3.2mm)
Reach: .650" (16.5mm)

QEBD-650

Kerf Width: .125" (3.2mm)
Reach: .650" (16.5mm)

QEB-653

Kerf Width: .125" (3.2mm)
Reach: .650" (16.5mm)

QEBD-730

Kerf Width: .125" (3.2mm)
Reach: .740" (18.8mm)

QEBD-825

Kerf Width: .125" (3.2mm)
Reach: .825" (20.9mm)

QEB-M570

Kerf Width: .125" (3.2mm)
Reach: .570" (14.5mm)

QDS-M670

Kerf Width: .125" (3.2mm)
Reach: .670" (17.0mm)

Kerf Q-LON® Weatherseals

QEZ-100

Kerf Width: .078" (2.0mm)
Reach: .100" (2.5mm)

QEZ-120

Kerf Width: .078" (2.0mm)
Reach: .315" (8.0mm)

QEZD-260

Kerf Width: .078" (2.0mm)
Reach: .260" (6.6mm)

QEZ-293

Kerf Width: .106" (2.7mm)
Reach: .334" (8.5mm)

QEZD-320

Kerf Width: .078" (2.0mm)
Reach: .336" (8.5mm)

QEZ-374*

Kerf Width: .078" (2.0mm)
Reach: .374" (9.5mm)

QWS-21

Kerf Width: .106" (2.7mm)
Reach: .346" (8.8mm)

QWS-77

Kerf Width: .106" (2.7mm)
Reach: .250" (6.4mm)

QWS-109

Kerf Width: .106" (2.7mm)
Reach: .270" (6.9mm)

QEZD-250

Kerf Width: .078" (2.0mm)
Reach: .250" (6.4mm)

QWS-DH1

Kerf Width: .106" (2.7mm)
Reach: .390" (9.9mm)

QWS-LS*

Kerf Width: .106" (2.7mm)
Reach: .410" (10.4mm)

Kerf APTUS® Plastic Weatherseals

AP-150

Bulb Diameter: .140" (3.6mm)
Kerf Width: .078" (2.0mm)

AP-412

Bulb Diameter: .300" (7.6mm)
Kerf Width: .078" (2.0mm)

AP-425

Bulb Diameter: .250" (6.4mm)
Kerf Width: .078" (2.0mm)

AP-427

Bulb Diameter: .275" (7.0mm)
Kerf Width: .078" (2.0mm)

AP-435

Bulb Diameter: .350" (8.9mm)
Kerf Width: .100" (2.5mm)

APF-310

Bulb Diameter: .310" (7.9mm)
Kerf Width: .078" (2.0mm)

AP-625

Bulb Diameter: .250" (6.4mm)
Kerf Width: .100" (2.5mm)

AP-415

Bulb Diameter: .250" (6.4mm)
Kerf Width: .078" (2.0mm)

Kerf POLYFLEX® Plastic

PF-101


PF-103


PF-104


PF-109


PF-115


PF-130


PF-138


PF-141


PF-144


PF-145


PF-154


PF-164


KERF PILE

KP-11

Kerf Width: .078" (2.0mm)

KP-51

Kerf Width: .078"-.100" (2.0-2.5mm)

KP-52

Kerf Width: .078"-.100" (2.0-2.5mm)

KP-56

Kerf Width: .125" (3.2mm)

KP-57

Kerf Width: .125" (3.2mm)

KP-44

Kerf Width: .078"-.100" (2.0-2.5mm)

KP-43

Kerf Width: .078" (2.0mm)

KP-84

Kerf Width: .078" (2.0mm)

*Special Order – contact VISCO Products for details.

Kraft-Faced

JM Formaldehyde-free™ Thermal and Acoustical Fiber Glass Insulation



JM FORMALDEHYDE-FREE™ FIBER GLASS INSULATION

JM Formaldehyde-free™ fiber glass building insulation offers superior thermal and acoustical performance—and it improves indoor air quality because it's made without formaldehyde. Why is that important? Because the U.S. Environmental Protection Agency (EPA) recommends limiting exposure to formaldehyde as much as possible, and the California Air Resources Board, a division of the California EPA, recommends that homeowners, builders and architects use building materials and insulation made without formaldehyde when building a home or remodeling. JM is the only company in the industry with a complete line of fiber glass building insulation made without formaldehyde. Visit specJM.com for more information.

PRODUCT DESCRIPTION

Johns Manville Kraft-Faced insulation is a lightweight thermal and acoustical fiber glass insulation made of long, resilient glass fibers bonded with an acrylic thermosetting binder. The kraft facing can serve as an integral vapor retarder.

AVAILABLE FORMS

- Pre-cut batts – fit standard wall cavities and are faster to install than roll products.
- Rolls – can be cut to fit any size cavity and installed in any part of a building.

APPLICATIONS

- Wood frame construction – residential homes and light commercial buildings
- Metal frame construction – commercial buildings
- Pre-manufactured homes – modular or manufactured housing
- Engineered wood construction – assemblies framed with 12" to 19.2" (305 mm to 488 mm) on-center cavities, wide-spaced wood trusses or I-joists
- Interior wall sound control – interior walls and floor and ceiling assemblies (for sound class ratings for wall assemblies, see the appropriate STC values data sheet for either steel or wood framing)

INSTALLATION

Kraft-faced insulation cuts easily with an ordinary utility knife. Stapling tabs are provided for attachment to wood framing. The insulation can also be installed with fasteners or simply pressed in place between studs or joists. The kraft facing on this product will burn and must not be left exposed. It must be covered with gypsum board or another approved interior finish. Where an exposed application is required, use FSK-25 flame-resistant faced insulation.

Note: In colder climate areas, vapor retarders (whether attached to the insulation or applied separately) are often placed toward the heated or conditioned side of the wall. This is done to reduce water vapor penetration into the wall from the building interior. Conversely, in predominantly hot, humid climates local practices often call for placing the vapor retarder toward the outside of the wall cavity. Check your local building codes for vapor retarder requirements.

PACKAGING

This insulation is compression-packaged for savings in storage and freight costs.

RECOMMENDED STORAGE AND TRANSPORT

Store insulation indoors. Keep insulation clean and dry at all times. When transporting, cover completely with a waterproof tarpaulin as necessary.

SPECIFICATION COMPLIANCE

ASTM C 665, Type II, Class C, Category 1
ASTM E 96 Permeability (Kraft) 1.0 Perm

PERFORMANCE ADVANTAGES

- Improves indoor air quality – because it's made without formaldehyde.
- Thermally efficient – provides effective resistance to heat transfer with R-values up to R-38 (RSI-6.7).
- Controls moisture – kraft facing resists water vapor transmission.
- Controls sound – reduces transmission of conversations and equipment noises through interior and exterior walls and floor and ceiling assemblies.
- Noncorrosive – does not accelerate corrosion of pipes, wiring or metal studs.
- Durable – unaffected by moisture, oil, grease and most acids. It will not rot, mildew or otherwise deteriorate.
- Resilient – bonded glass fibers will not pull apart during normal applications and resist settling, breakdown and sagging from vibration.
- Flexible – forms readily around corners and curved surfaces.

Kraft-Faced

JM Formaldehyde-free™ Thermal and Acoustical Fiber Glass Insulation

Visit our website at specJM.com

BUILDING CODE COMPLIANCE AND FIRE HAZARD CLASSIFICATION

	ICBO	SBCCI	BOCA	IBC/IRC	Flame Spread*	Smoke Developed*
Kraft-Faced	Types III, IV, V	Types III, V, VI	Types III, IV, V	Types III, IV, V/All Types	Not Rated	Not Rated

*Per ASTM E 84.

AVAILABLE FORMS*

Specification Compliance	R-Value (hr•ft²•°F/Btu)	RSI-Value (m²•°C/Watts)	Thickness** (in)	Thickness** (mm)	Width*** Metal Framing (in)	Width*** Wood Framing (in)	Width*** Metal Framing (mm)	Width*** Wood Framing (mm)
ASTM C 665	38c	6.7	10 ¼	260	—	15 ½, 23 ⅝	—	394, 600
Kraft-Faced	38	6.7	13	330	16, 24	16, 24	406, 610	406, 610
Type II, Class C	30c	5.3	8 ¼	210	—	15 ¼, 23 ⅝	—	394, 600
Category 1	30	5.3	10 ¼	260	12, 16, 24	12, 16, 19, 24	304, 406, 610	305, 406, 483, 610
	25	4.4	8 ½	216	—	15, 23	—	381, 584
	22	3.9	7 ½	191	—	15, 19, 23	—	381, 483, 584
	21	3.7	5 ½	140	—	15, 23	—	381, 584
	19	3.3	6 ½	165	16, 24	11, 15, 19, 23	406, 610	279, 381, 483, 584
	15	2.6	3 ½, 3 ⅝	89, 92	—	15, 23	—	381, 584
	13	2.3	3 ½, 3 ⅝	89, 92	16, 24	11, 15, 23	406, 610	279, 381, 584
	11	1.9	3 ½, 3 ⅝	89, 92	16, 24	11, 15, 23	406, 610	279, 381, 584

* Consult your local JM sales representative or product availability chart for other available sizes and R-values (RSI-values).
** Thickness may vary by producing location.
*** Special widths and lengths may be available. Check with your local JM sales representative. Standard product lengths include 48", 93" and 96" (1.22 m, 2.36 m and 2.44 m) batts.
c Cathedral ceiling application

SHORT FORM SPECIFICATION

All insulation shown on drawings or specified herein shall be "Johns Manville Kraft-Faced Formaldehyde-free Thermal and Acoustical Fiber Glass Insulation." Thermal resistance "R" values (RSI) of the insulation shall be R (RSI) _____ in ceilings, R (RSI) _____ in walls, and R (RSI) _____ in floors over unheated spaces.

LIMITATIONS OF USE

Check applicable building codes. Kraft-faced insulation should not be left exposed.

SCS CERTIFIED
Minimum 25% Recycled Content
5% Pre-consumer
20% Post-consumer
SCIENTIFIC CERTIFICATION SYSTEMS
SCS-MC-01073

Technical specifications as shown in this literature are intended to be used as general guidelines only. The physical and chemical properties of kraft-faced thermal and acoustical fiber glass insulation listed herein represent typical, average values obtained in accordance with accepted test methods and are subject to normal manufacturing variations. They are supplied as a technical service and are subject to change without notice. Any references to numerical flame spread or smoke developed ratings are not intended to reflect hazards presented by these or any other materials under actual fire conditions. Check with the sales office nearest you for current information. All Johns Manville products are sold subject to Johns Manville's Limited Warranty and Limitation of Remedy. For a copy of the Johns Manville Limited Warranty and Limitation of Remedy or for information on other Johns Manville thermal and acoustical insulation and systems, call or write to the 800 number or address listed below.

Properly insulating a structure using Johns Manville building insulation helps preserve our environment by reducing energy consumption for heating and cooling, reducing the pollution resulting from fuel burning, reducing the emission of hazardous air pollutants during manufacturing and reducing waste through the utilization of recycled materials. Look for the cross and globe emblem on Johns Manville building insulation which indicates independent certification by Scientific Certification Systems, Inc. of 25% or more recycled glass content.

Johns Manville

Distributed by:

Insulation Systems
717 17th St.
Denver, CO 80202
(800) 654-3103
specJM.com

BID-0016 10-09 (Replaces 10-08)
© 2009 Johns Manville

Walls
Interior and Exterior

With rigid foam insulation from Dow on the walls, your building can perform more efficiently. Both the The Ultra Air Barrier Wall System and Thermax Wall System meet ASTM E2357 wall assembly test and ASHRAE 90.1 for continuous insulation and air barriers. It passed ASTM E331 water leakage test and is an approved air barrier assembly by the Air Barrier Association of America (ABAA). These products offer:

- Excellent long-term thermal performance
- Ease of use
- Moisture resistance
- Reusability in some situations

Note: Applicable codes may require a 15-minute thermal barrier between insulation and occupied space.

Exterior Cavity Wall – Steel Stud

Products:
- The Ultra Air Barrier Wall System
- STYROFOAM™ Brand CAVITYMATE™ SC Insulation
- STYROFOAM™ Brand Ultra SL Insulation
- THERMAX™ Sheathing
- THERMAX™ (ci) Exterior Insulation
- WEATHERMATE™ Straight Flashing

Application:
The Ultra Air Barrier Wall System featuring STYROFOAM™ Brand Ultra SL Insulation with shiplap edges and WEATHERMATE™ Straight Flashing Tape, provides designers a simple solution for exceptional long-term thermal insulating performance and excellent air/vapor and moisture barrier capability in steel stud backup in one solution.
- Meets NFPA 285 requirements*

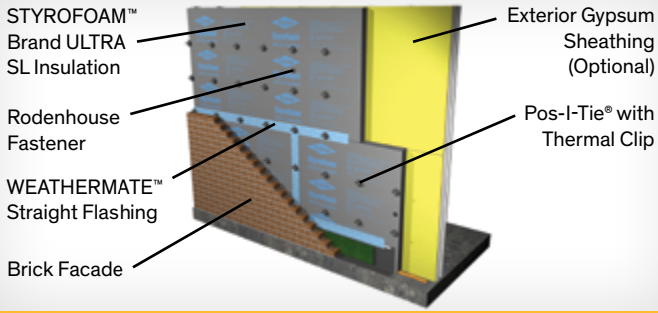

Ultra Wall Air Barrier System combines insulating power of STYROFOAM™ Brand Ultra SL Insulation and WEATHERMATE™ Straight Flashing Tape in one easy-to-install system that deliver continuous insulation performance and an air/vapor and moisture barrier

Exterior Cavity Wall – THERMAX™ Wall System

Products:
- THERMAX™ (ci) Exterior Insulation
- STYROFOAM™ Brand Spray Polyurethane Foam† (SPF) (CM Series)
- WEATHERMATE™ Straight Flashing

Application:
Install THERMAX™ (ci) Exterior Insulation over steel studs with sheathing joints and other thru-wall penetrations protected by WEATHERMATE™ Straight Flashing. After closing in the building, create an effective air barrier by spraying STYROFOAM™ Brand SPF (CM Series) on the interior of the THERMAX™ (ci) Exterior Insulation in the stud cavity.
- Three-in-one construction for maximum design efficiency
- Integral, durable acrylic-coated aluminum facer provides drainage plane and water-resistive barrier
- Lightweight sheathing weighs just 12 lbs per board, speeding up the construction process
- Meets ASHRAE 90.1 prescriptive requirements for continuous insulation
- Patent pending continuous insulation system
- Has approved NFPA 285 behind various cladding including metal panel & composts, cementicious siding, brick, stucco, and terracotta.*

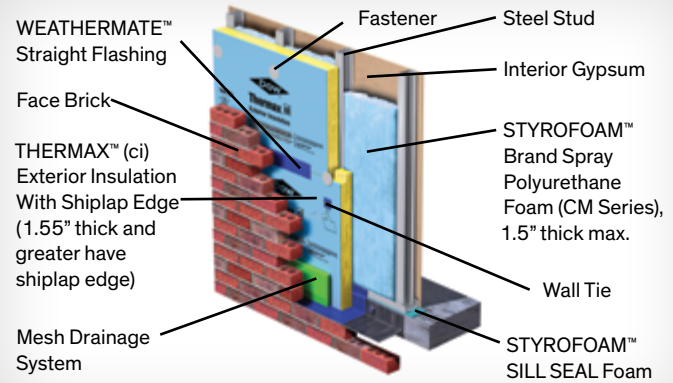

For more detailed installation information, contact your Dow representative or refer to the product literature.
*Meets NFPA 285 per Section 2603.5.5 of the building code. For specific assemblies see code report ESR 2142.
†STYROFOAM™ Brand Spray Polyurethane Foam should be installed by a trained SPF applicator wearing protective clothing, gloves, goggles and proper respiratory protection. Consult the instructions and Material Safety Data Sheets carefully before use.

Exterior Cavity Wall – Block Backed

Products:
- STYROFOAM™ Brand CAVITYMATE™ Ultra Insulation 15 3/4" or 16" width
- STYROFOAM™ Brand Ultra SL Insulation 4' x 8'
- STYROFOAM™ Brand CAVITYMATE™ Insulation
- STYROFOAM™ Brand CAVITYMATE™ Plus Insulation
- GREAT STUFF PRO™ Gaps & Cracks Insulating Foam Sealant*
- WEATHERMATE™ Straight Flashing Tape

Application:
The Ultra Air Barrier Wall System is a tested wall assembly for brick and block wall providing long-term continuous insulation and excellent air/vapor and moisture barrier properties in one system. The Ultra Air Barrier Wall System meets ASTM E2357 wall assembly test and ASHRAE 90.1 for continuous insulation and air barriers. It passed ASTM E331 water leakage test and is an approved air barrier assembly by the Air Barrier Association of America (ABAA).
- Meets NFPA 285 requirements**

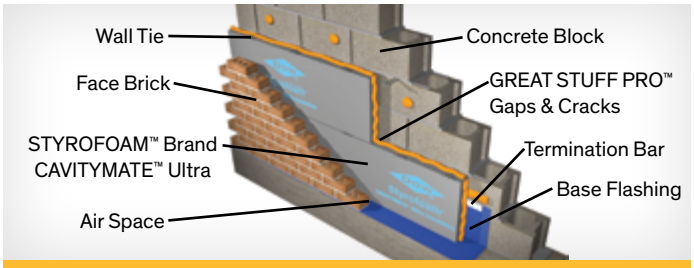

Ultra Wall Air Barrier System combines insulating power of STYROFOAM™ Brand CAVITYMATE™ Ultra Insulation and the exceptional air sealing capabilities of GREAT STUFF PRO™ Gaps & Cracks Insulating Foam Sealant in one easy-to-install system that deliver continuous insulation performance and an air/vapor and moisture barrier

Application:
Install insulation on the exterior of block-backed cavity walls.

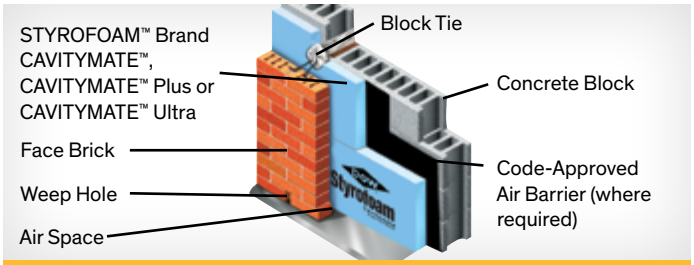

STYROFOAM™ Brand CAVITYMATE™ Insulation is designed specifically for moist cavity wall environments. Manufactured with distinct carbon block technology to absorb infrared radiation, STYROFOAM™ Brand CAVITYMATE™ Ultra Insulation has an R-value of 5.6 per inch - the highest of any polystyrene foam insulation and is available in 15 3/4" and 16" widths making it easy to fit between brick ties in cavity wall applications.

Metal Building

Products:
- THERMAX™ Metal Building Board
- THERMAX™ Heavy Duty
- THERMAX™ Light Duty
- THERMAX™ Sheathing

Application:
Install insulation between wall girts and metal siding.

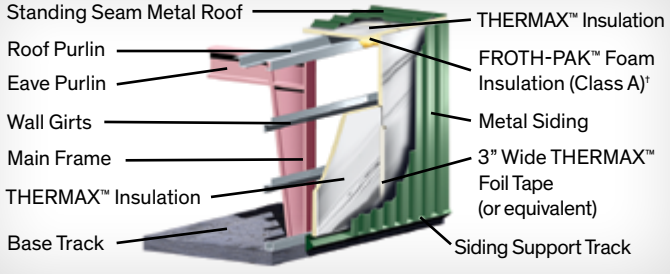

THERMAX™ Insulation products help safeguard pre-engineered metal buildings against thermal loss and moisture buildup. A variety of thicknesses and lengths up to 30' are available to meet specific design requirements.

†For air sealing the roof/wall juncture

Exterior Precast

Products:
- STYROFOAM™ Brand Square Edge Insulation
- ISOCAST™ R Insulation

Application:
Used in insulated precast, prestressed or tilt-up construction, rigid foam insulation products from Dow combine insulating capabilities with the added strength of concrete. The foam is sandwiched between two wythes of concrete and held together structurally by metal or nonconductive connectors.

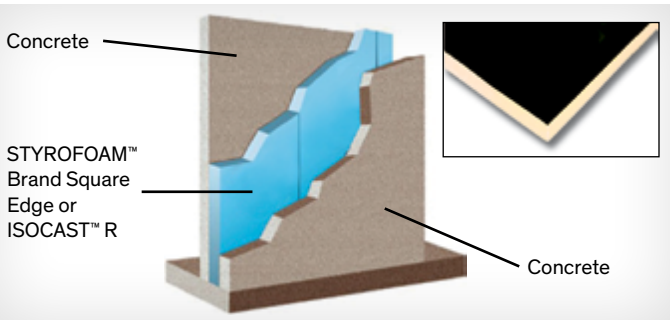

ISOCAST™ R Polyisocyanurate Insulation features a trilaminate aluminum/poly/kraft facer for strength and high R-value per inch in precast concrete walls.

For more detailed installation information, contact your Dow representative or refer to the product literature.
* Read label and MSDS carefully before use.
** Meets NFPA 285 per Section 2603.5.5 of the building code. For specific assemblies see code report ESR 2142.

Interior – Exposed Wall

Products:
- THERMAX™ White Finish
- THERMAX™ Light Duty
- THERMAX™ Heavy Duty

Application:
For best results, install against interior of structural wall with the Interlocking System joint closure. Ask your seller about other installation methods. Distinct, easy-to-clean facers of aluminum and/or acrylic-coated aluminum make THERMAX™ Polyisocyanurate Insulation ideal for exposed interior walls, adding durability and moisture control. With THERMAX™ Insulation, there is no need for drywall or gypsum board.

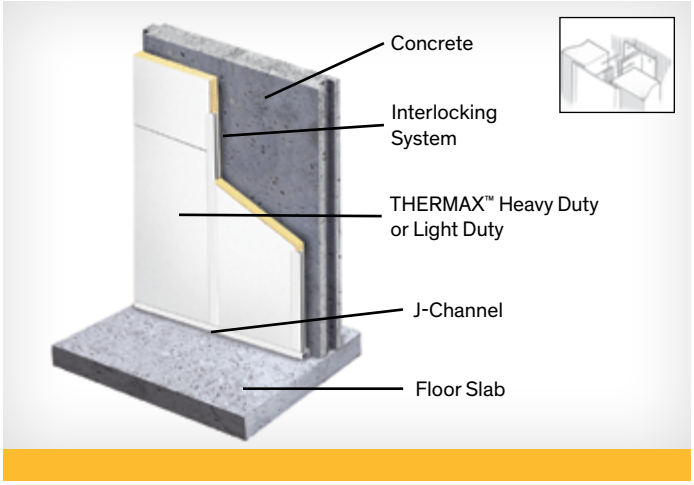

Interior – Concealed Wall

Products:
- STYROFOAM™ Brand Z-MATE™ Insulation
- STYROFOAM™ Brand Square Edge Insulation
- THERMAX™ Sheathing
- TUFF-R™ Commercial Insulation
- Super TUFF-R™ Commercial Insulation
- GREAT STUFF PRO™ Gaps & Cracks Insulating Foam Sealant†

Application:
Install rigid foam insulation between furring strips. Cover with an approved thermal barrier.

A bead of GREAT STUFF PRO™ Gaps & Cracks Insulating Foam Sealant helps to seal the wall/slab joint.

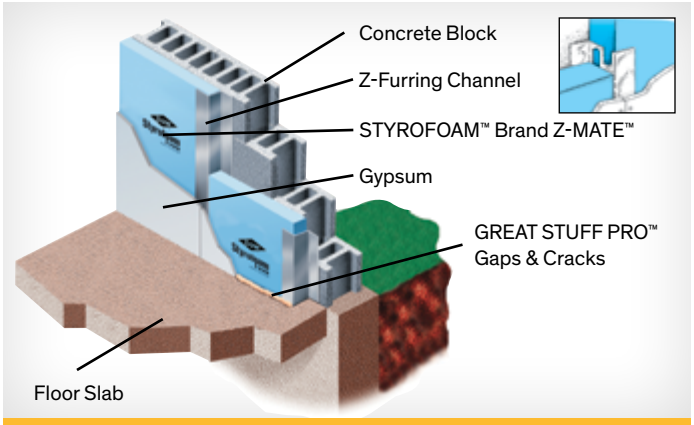

STYROFOAM™ Brand Z-MATE™ Insulation, nominally 24" wide, is pre-cut to 23-7/8", so it can be installed between Z-furring channels placed on 24" centers.

One- and Two-Component Polyurethane Foam Sealants†† for Air Sealing The Building Envelope

Products:
- FROTH-PAK™ Foam Insulation
- GREAT STUFF PRO™ Gaps & Cracks Insulating Foam Sealant
- GREAT STUFF PRO™ Window & Door Insulating Foam Sealant



FROTH-PAK™ Foam Insulation is ideal for sealing roof/wall junctures up to 6" high or less (max. 2" thick) for unlimited length and can be left exposed per NFPA 286 in roof/wall junctures.

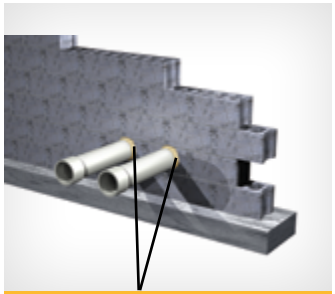

Seal smaller areas, such as gaps around pipe penetrations, with GREAT STUFF PRO™ Gaps & Cracks Insulating Foam Sealant.



GREAT STUFF PRO™ Window & Door Insulating Foam Sealant fills gaps around window and door frames without causing bowing, when properly applied.

Our Insulating Foam Sealant options create an airtight and moisture-resistant seal and meet ASHRAE energy code requirements.

For more detailed installation information, contact your Dow representative or refer to the product literature.
† Consult the instructions and Material Safety Data Sheet carefully before use

Foundations and Slabs
Above Grade and Below Grade

Rigid foam insulation products from Dow offer excellent insulation and moisture protection in foundation and slab applications. Extruded polystyrene foam insulation from Dow offers a combination of benefits for almost any application.

- Long-term thermal performance
- High compressive strength
- Ease of use
- Excellent moisture resistance
- Waterproofing protection

Foundations

Products:
- STYROFOAM™ Brand PERIMATE™ Insulation
- STYROFOAM™ Brand Square Edge Insulation
- STYROFOAM™ Brand Scoreboard Insulation
- DOW™ Protection Board III Insulation

Application:
Install extruded polystyrene foam insulation from Dow against the exterior foundation wall. When properly installed, the insulation resists moisture, so it offers more stable longterm R-value* in moist foundation applications.

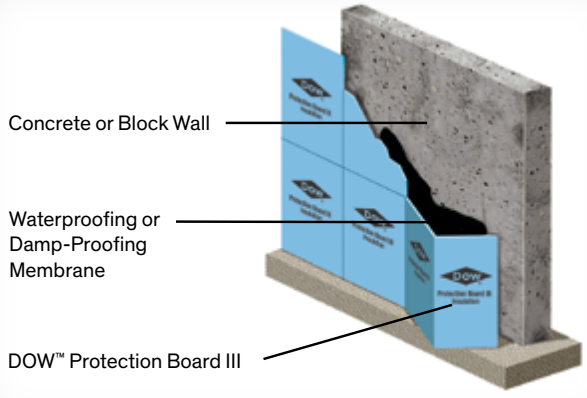

Fanfolded on 24" centers with plastic film on one side, DOW™ Protection Board III Insulation is durable yet easy to install and work with on the job site.

For additional information regarding DOW™ Protection Board III visit http://www.adamsplasticsinc.com/

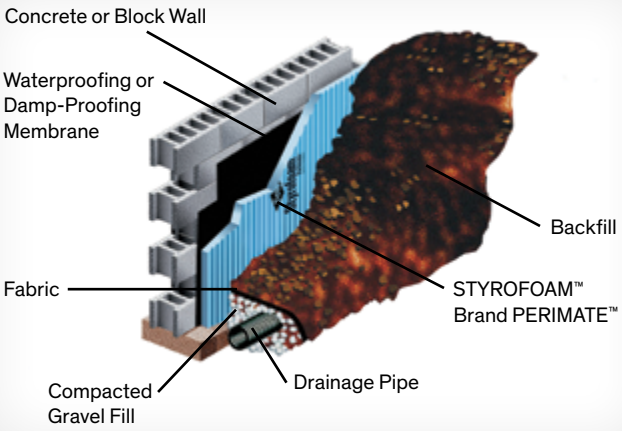

STYROFOAM™ Brand PERIMATE™ Insulation features drainage grooves to direct water away from the foundation, offering thermal insulation and drainage of subsurface soil in a single step.

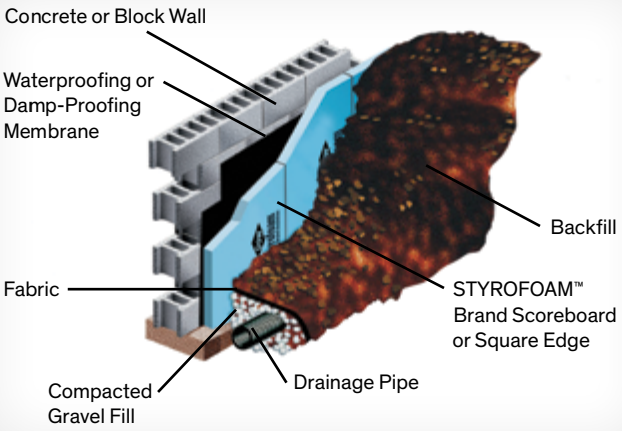

STYROFOAM™ Brand Square Edge Insulation and STYROFOAM™ Brand Scoreboard Insulation provide long-term thermal performance.

For more detailed installation information, contact your Dow representative or refer to the product literature.
* R means resistance to heat flow. The higher the R-value, the greater the insulating power.

Radiant Floor – Under Slab

Products:
- STYROFOAM™ Brand Tongue and Groove Insulation
- STYROFOAM™ Brand Square Edge Insulation
- STYROFOAM™ Brand HIGHLOAD 40, 60 or 100 Insulation

Application:
Install STYROFOAM™ Brand Extruded Polystyrene Foam Insulation under the slab to help provide moisture protection and to prevent radiant floor heat from dissipating into the ground.

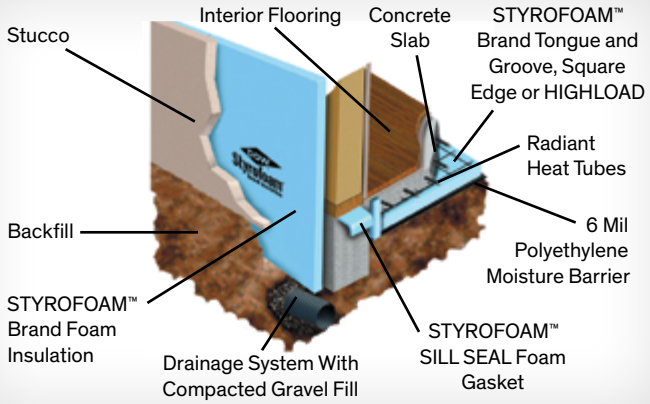

STYROFOAM™ Brand Extruded Polystyrene Foam Insulation offers excellent moisture resistance and insulating power in slab-on-grade radiant floor applications.

Radiant Floor – Over Deck/Subfloor

Products:
- STYROFOAM™ Brand Scoreboard Insulation
- STYROFOAM™ Brand Square Edge Insulation
- STYROFOAM™ Brand WALLMATE™ Insulation

Application:
Use in upper level floors in new construction or over the slab in a retrofit situation. Extruded polystyrene foam insulation from Dow helps direct radiant floor heat upward, into the room.

Consult local building code official for construction specifics.

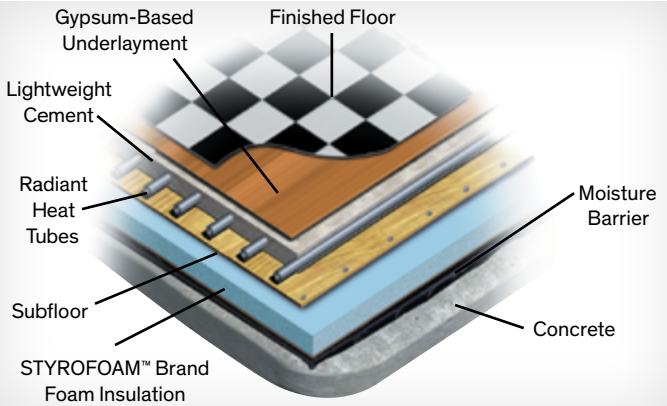

Assembly for new construction for an upper level floor or as a retrofit over existing slab. If no vapor retarder was installed under the existing slab, it is recommended to add one between the slab and the rigid foam insulation. A vapor retarder is not needed if the deck is a second-floor application.

Geotechnical

Products:
- STYROFOAM™ Brand HIGHLOAD 40, 60 or 100 Insulation
- STYROFOAM™ Brand Square Edge Insulation

Application:
Use wherever excellent load-bearing, insulating and moistureresistance capabilities are needed, including under building floor slabs; airport runways, taxiways and aprons; railroads; culverts; retaining walls; storage tank slabs; and swimming pools.

Lay STYROFOAM™ Brand Extruded Polystyrene Foam Insulation on top of leveled soil. Top with a gravel base and pavement or other surface. For low-temperature floors such as ice rinks, position insulation under the wearing slab.

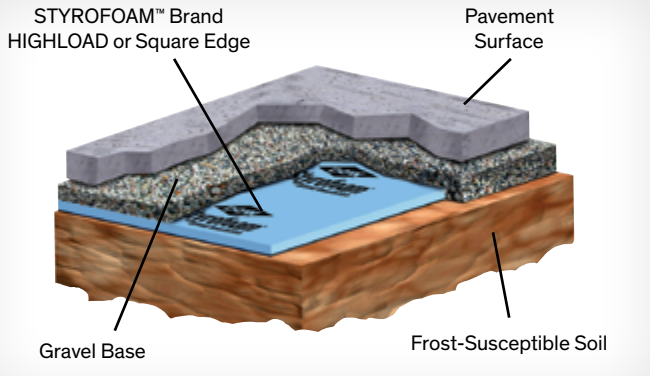

STYROFOAM™ Brand Extruded Polystyrene Foam Insulation offers excellent moisture resistance and insulating power in slab-on-grade radiant floor applications.

For more detailed installation information, contact your Dow representative or refer to the product literature.

Roofs
Plaza and Protected Membrane

STYROFOAM™ Brand Extruded Polystyrene Foam Insulation offers exceptional performance in plaza and protected membrane roofing (PMR) applications.

- Excellent moisture resistance and stable long-term R-value
- Extends life of plaza or roof, providing protection from ultraviolet deterioration
- Protects membrane against weathering, physical abuse and damage
- Maintains membrane at a relatively constant temperature, minimizing effects of freeze-thaw cycling and excessive heat
- Reduces repair expenditures
- Easy removal and re-installation of ballast and insulation

Products:
- STYROFOAM™ Brand HIGHLOAD 40, 60 or 100 Insulation
- STYROFOAM™ Brand PLAZAMATE™ Insulation
- STYROFOAM™ Brand ROOFMATE™ Insulation
- STYROFOAM™ Brand Ribbed ROOFMATE™ Insulation

Application:
Install on top of the waterproofing membrane. Follow with approved fabric. For PMR construction, finish with a layer of crushed stone, gravel, pavers or green roof. For plaza decks where pedestrian or vehicular traffic is anticipated, cover fabric with gravel or pedestals for drainage, then top with pavers, poured concrete or other exterior topping.
- Year-round construction – roof is waterproofed first, then insulated
- Over forty years' proven performance
- Thermal warranties available from Dow; full system warranties available from membrane manufacturers

Membrane Field Temperature Test

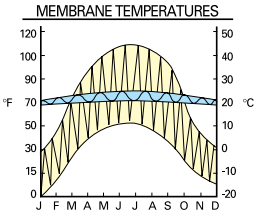

Membrane protection (PMR vs. conventional): Field studies have shown that a constant temperature can extend the life of the membrane. STYROFOAM™ Brand ROOFMATE™ Insulation products offer excellent temperature control.
- PMR (blue line) – the membrane temperature remains relatively constant
- Conventional roof (yellow line) – membrane temperature fluctuates widely

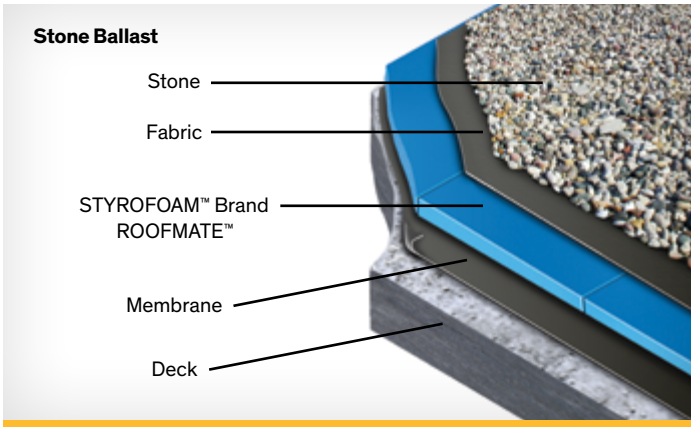

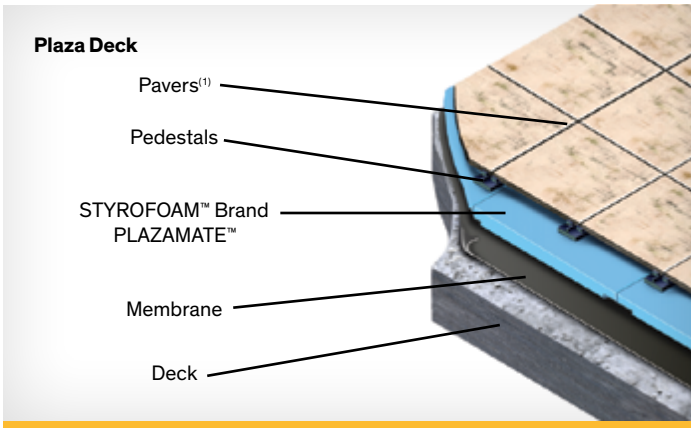

STYROFOAM™ Brand PLAZAMATE™ Insulation is designed to hold up under the heavy demands of plaza roof construction.

(1) Pavers require pedestals unless STYROFOAM™ Brand Ribbed ROOFMATE™ Insulation is used.

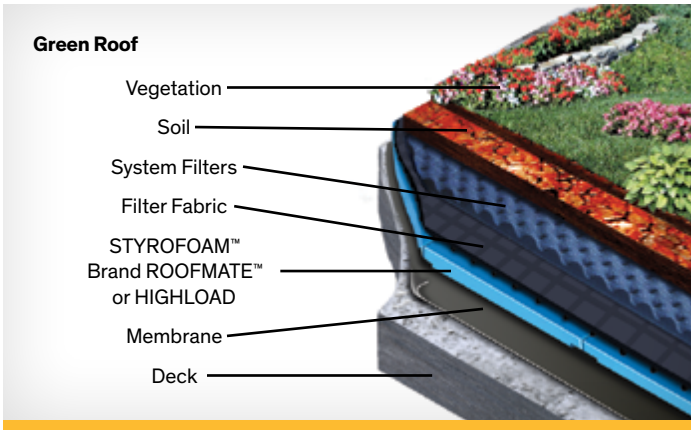

For more detailed installation information, contact your Dow representative or refer to the product literature.

Conventional – Mechanically Attached, Ballasted And Fully Adhered

In conventional roofing applications, STYROFOAM™ Brand Extruded Polystyrene Foam Insulation products from Dow offer:

- Long-term R-value
- Moisture resistance
- High compressive strength for excellent durability and damage resistance
- Ease of use
- Planed surface for excellent bonding of adhesives (STYROFOAM™ Brand DECKMATE™ Plus FA Insulation)

STYROFOAM™ Brand Extruded Polystyrene Foam Insulation may be installed directly on metal decks according to Underwriters Laboratories Construction Nos. 260 and 440. Consult Dow and/or local building code for installation requirements.

Products:
- STYROFOAM™ Brand DECKMATE™ Plus Insulation
- STYROFOAM™ Brand DECKMATE™ Plus FA Insulation
- STYROFOAM™ Brand Tapered DECKMATE™ Plus FA Insulation
- INSTA STIK™ Quik Set Commercial Roofing Adhesive

Application:
Install insulation directly on structural deck, including metal decking. Any application-appropriate roofing membrane may be used with rigid board insulation from Dow. Use INSTA STIK™ Quik Set Roofing Adhesive to adhere the insulation to the roofing deck and cover board without the need of fasteners that penetrate the roofing assembly.

In some cases a coverboard or slip sheet may be required between the insulation and the membrane for heat or chemical protection.

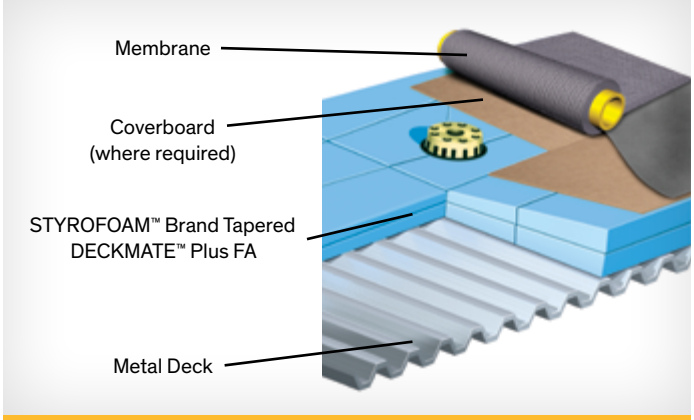

STYROFOAM™ Brand Tapered DECKMATE™ Plus FA Insulation provides a positive slope to improve roof drainage. Experienced custom fabricators provide exceptional job service. Consult Dow and/or local building code for installation requirements.

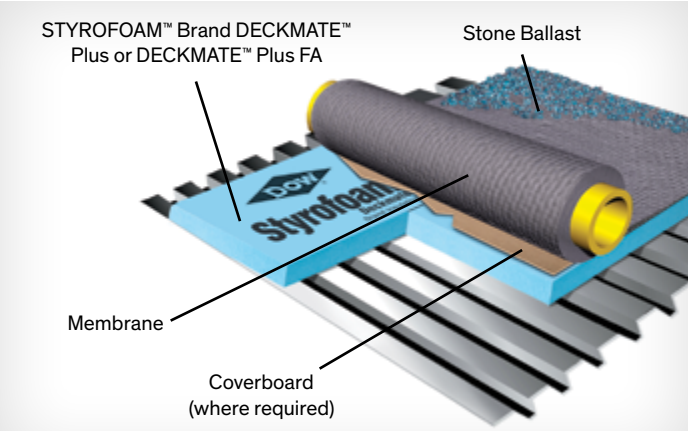

In the United States, a 50-year thermal warranty is available on STYROFOAM™ products 1.5 inches and greater. For thickness less than 1.5 inches, other warranties may apply. Warranties are available as described at www.dbswarranties.com.

For more detailed installation information, contact your Dow representative or refer to the product literature.

Steep Slope

In steep slope roof construction, insulation and adhesive products from Dow offer high R-value, high compressive strength, durability and ease of use.

- For use on metal or wood decks
- Accept a variety of roofing materials, including shingles, slate, tile and metal membranes
- STYROFOAM™ Brand DECKMATE™ Plus Extruded Polystyrene Foam Insulation offers excellent moisture resistance
- In standing seam metal roofs, THERMAX™ Polyisocyanurate Insulation allows the use of lighter gauge decking (26 gauge instead of the typical 22 gauge) and open frame designs
- WEATHERMATE™ Straight Flashing at seams between insulation boards resists water intrusion under standing seam metal roofs

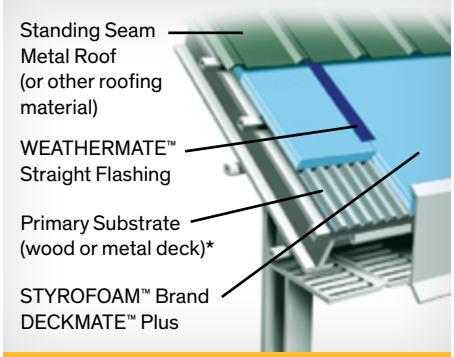

STYROFOAM™ Brand DECKMATE™ Plus Insulation provides excellent moisture resistance and high R-value in a lightweight board.



Use Class A rated THERMAX™ products in open frame designs, where the insulation boards may be left exposed to the interior. Tape top side of seams with WEATHERMATE™ Straight Flashing.

Products:
- STYROFOAM™ Brand DECKMATE™ Plus Insulation
- THERMAX™ Heavy Duty
- THERMAX™ Light Duty
- THERMAX™ Metal Building Board
- THERMAX™ Sheathing
- THERMAX™ White Finish
- WEATHERMATE™ Straight Flashing

Application:
Install insulation on clean, dry, structural roof deck. Cover with an underlayment where required. Finish with shingles, tile, slate, metal or other roofing material.

Available in 4", 6" and 9" widths, WEATHERMATE™ Straight Flashing combines a high-density polyethylene film facer with a butyl rubber adhesive for a strong mechanical and chemical bond to insulation and other building materials.

Roof Re-Cover Applications

STYROFOAM™ Brand RECOVERMATE™ CR Insulation is designed specially for roof re-cover applications:

- Resistant to the effects of moisture
- Excellent compressive retention
- Lightweight: easy to cut, handle, install and store
- Withstands temperatures to 165°F
- Chemical-resistant; useful for installation with plasticized membranes
- Fanfolded
- For light-colored membranes only

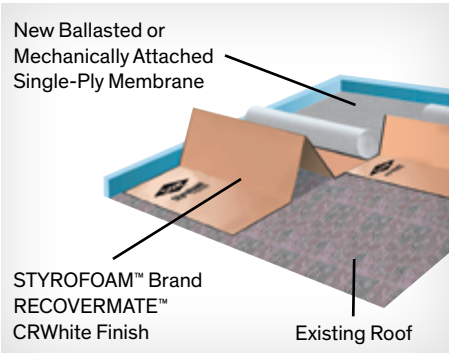

Use Class A rated THERMAX™ products in open frame designs, where the insulation boards may be left exposed to the interior. Tape top side of seams with WEATHERMATE™ Straight Flashing.

Products:
- STYROFOAM™ Brand RECOVERMATE™ CR Insulation

Application:
Install STYROFOAM™ Brand RECOVERMATE™ CR Insulation over entire surface of old roof, on top of existing membrane. Top with ballasted or mechanically attached sheet membrane.

For additional information on STYROFOAM™ Brand RECOVERMATE™ CR Insulation visit http://www.adamsplasticsinc.com/

For more detailed installation information, contact your Dow representative or refer to the product literature.
* Only applies to code accepted wood or metal deck
† For air sealing the roof/wall juncture

One- And Two-Component Polyurethane Foam Products For Roofs

Polyurethane foam insulation, sealant and adhesive products from Dow deliver the high quality and reliability professionals require in a wide range of commercial roofing applications, including:

- Flat and low slope roofs
- Steep slope roofs
- Barrel and dome roofs
- Roof re-cover projects
- New and re-roof projects

Sealant

Products:
- FROTH-PAK™ Foam Sealant**

Application:
Use FROTH-PAK™ Foam Sealant to fill gaps or joints 4" or less. When properly applied, the spray forms an effective air sealant or insulation on most roofing materials. FROTH-PAK™ Foam Sealant is also useful in sealing the perimeter of the building between the roof deck and parapet.

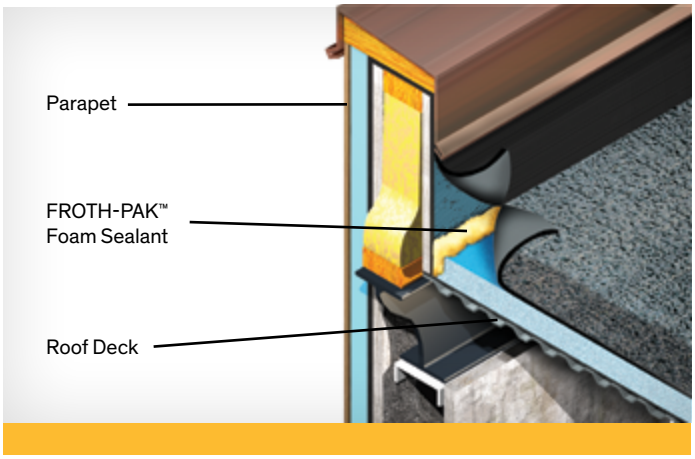

Adhesives

Products:
- INSTA STIK™ Quik Set Commercial Roofing Adhesive**
- TILE BOND™ Roof Tile Adhesive**

Application:
Polyurethane adhesive products from Dow provide a fast, efficient method for securing foam insulation boards or roof tiles to appropriate roof deck or substrate.

INSTA STIK™ Quik Set has a limited 10-year adhesion warranty when applied to compatible materials or substrates by an approved applicator. Limited 15- and 20- year adhesion warranties are available at additional cost. Certain conditions apply; see the appropriate warranty for details.

TILE BOND™, with its easy-to-use, self-contained dispensing equipment, is designed for use with low/flat, medium, high and two-piece barrel profiles. TILE BOND™ must be applied by an approved applicator to meet certain building code requirements. Consult local code authorities.

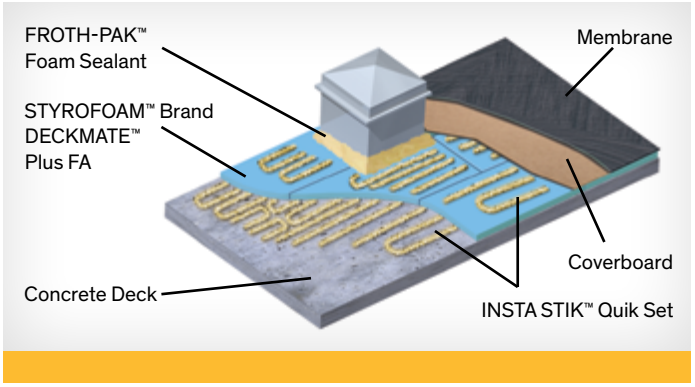

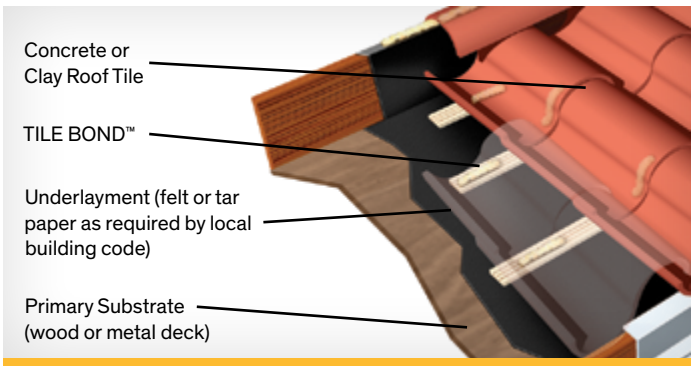

TILE BOND™ Roof Tile Adhesive adheres concrete or clay tiles to the roof deck/substrate. Refer to tile manufacturer's instructions for details.

For more detailed installation information, contact your Dow representative or refer to the product literature.
**Consult the instructions and Material Safety Data Sheet carefully prior to use

Dow Polyisocyanurate Insulation

Physical Properties**	Thermal Resistance[1,2]	Compressive Strength (lb/in²), min., core foam	Flexural Strength (lb/in²), typ. for 1" core foam	Water Absorption (% increase by volume, 2-hr. results), max., core foam	Water Vapor Permeance[3] (perm)	Dimensional Stability[6] (% linear change), max.	Complies with ASTM	Maximum Use Temperature (°F)	Flame Spread[4], max., core foam	Smoke Developed, max., core foam	Width (inches)	Length (inches)	Typical Thickness Range (inches), core foam
ASTM Method	C518	D1621	C203	C209	E96	D2126	C1289		E84	E84			
ISOCAST™ R	6.5	25	40	0.1	<0.03	4.0	Type I Class 1 or 2[5]	190	55	200	48	96	1.0, 1.5, 2.0
Super TUFF-R™ Commercial	6.5	25	40	0.1	<0.03	4.0	Type I Class 1 or 2[5]	190	55	200	16 48 48	96 96 108	0.5, 0.75, 1.0, 1.5, 1.75, 2.0
THERMAX™ (ci) Exterior Insulation	6.5	25	55	0.1	<0.03	4.0	Type I Class 2	250	25	190	48 48	96 144	0.625, 1.0, 1.55, 2.0, 2.5, 3.0
THERMAX™ Heavy Duty	6.5	25	55	0.1	<0.03	4.0	Type I Class 2	250	25	190	48 48	96 120	1.0, 1.25, 1.55, 1.75, 2.0, 2.5, 3.0
THERMAX™ Heavy Duty Plus	6.5	25	55	0.1	<0.03	4.0	Type I Class 2	250	25	190	48 48	96 120	1.0, 1.25, 1.55, 1.75, 2.0, 2.5
THERMAX™ Light Duty	6.5	25	55	0.1	<0.03	4.0	Type I Class 2	250	25	190	48 48	96 120	0.5, 0.75, 1.0, 1.25, 1.55, 1.75, 2.0, 2.5, 3.0
THERMAX™ Metal Building Board	6.5	25	55	0.1	<0.03	4.0	Type I Class 2	250	25	190	48 48	96 120	0.5, 0.75, 1.0, 1.75, 2.0, 2.5, 3.0, 3.5, 4.0
THERMAX™ Sheathing	6.5	25	40	0.1	<0.03	4.0	Type I Class 2	250	25	190	48	96, 108, 120, 144	0.5, 0.75, 1.0, 1.5, 1.55, 2.0, 2.5, 3.0, 3.5, 4.0
THERMAX™ White Finish	6.5	25	55	0.1	<0.03	4.0	Type I Class 2	250	25	190	48	108	0.5, 0.75, 1.0, 1.25, 1.5, 1.55, 1.75, 2.0
TUFF-R™ Commercial	6.5	25	40	0.1	<0.03	4.0	Type I Class 1 or 2[5]	190	55	200	48	96 108	1.0, 1.25, 1.50, 1.875, 2.0

(1) Aged R-value per 1" @ 75°F mean temperature. R-values are expressed in ft2•h•°F/Btu.
(2) R means resistance to heat flow. The higher the R-value, the greater the insulating power. R-values determined by ASTM C518 using the aging process in ASTM C1289 (90 days @ 140°F).
(3) Water vapor permeance varies with product type and thickness. Values are based on the desiccant method, and they apply to insulation 1" in thickness. Thicker products have lower permeance.
(4) These numerical flame spread ratings are not intended to reflect hazards presented by this or any other material under actual fire conditions.
(5) Varies with thickness.
(6) Dimensional Stability is for the thickness

Note: Not all products are available in all parts of the country. Other product sizes are available on a made-to-order basis. Custom lengths of THERMAX™ Insulation products are available for orders of 7,500 board feet or more. Contact your Dow representative with questions.

Dow Polyurethane Foam Insulation

Physical Properties**	Property (units)	Flexural Strength (lb/in²), parallel	Thermal Resistance, R-value per inch, ft²•h•°F/Btu	Compressive Strength (lb/in²), parallel	Shear Strength (lb/in²), parallel	Apparent Core Density (lb/ft³)	Water Absorption (5% by volume)	Water Vapor Permeance (perm) @ 1" Thick	Cure Time	Application Temperature (°F)	Sizes
ASTM Method		C203	C518	D1621	C273	D1622	D2842	E96			
FROTH-PAK™ Foam Insulation (CLASS A)		22.7	5.6[1]	21.1	16.7	2.0	2.17	3.9	Tack-free[2] <1 min.	60-90	Selection of kit sizes and refill systems available
STYROFOAM™ SPF (CM Series)[3]	2030	NA	6.0[4]	25	NA	2.5	Pass	2.2	NA	30–70 Ambient (30–60 Substrate)	55 gal drums (one ISO, one polyol)
	2045	NA	6.5[5]	21.7	NA	2.3	Pass	2.7	NA	45–95 Ambient (45–100 Substrate)	

(1) Aged R-value: 90 days at 140°F. Initial R-value: 6.6.
(2) Actual cure time will depend on temperature, foam thickness, specific nozzle used, etc.
(3) Approved for use exclusively with the THERMAX™ Wall System.
(4) Aged R-value: 90 days at 140°F.
(5) Aged R-value: 180 days at room temperature.

** These are typical physical properties. Not to be construed as sales specifications.

For more detailed installation information, contact your Dow representative or refer to the product literature.

Dow Polyurethane Foam Sealants and Adhesives

Product	Cure Time	Size	Yield[1]
FROTH-PAK™ Foam Sealant[2, 3]	Tack-free <1 min.	Selection of kit sizes and refill systems available	12-620 bd ft Refill Systems 2,000-43,900 bd ft
GREAT STUFF PRO™ Gaps & Cracks[4]	Tack-free within 6 mins, trim in 30; full cure 1 hour	24 oz can, reusable straw 24 oz can, gun 30 oz can, reusable straw 30 oz can, gun	775 ft[5] 970 ft[5] 995 ft[5] 1,450 ft[5]
GREAT STUFF PRO™ Window & Door[4]	Tack-free within 9 mins, trim 1 hour; full cure 12 hours	20 oz can, reusable straw 20 oz can, gun 24.5 oz can, reusable straw 24.5 oz can, gun	6-9 windows[6] 8-11 windows[6] 8-11 windows[6] 11-14 windows[6]
INSTA STIK™ Quik Set	Tack-free 3-7 mins, depending on humidity	30 lb canister only (23 lb net chemical weight)	(refer to E-Z Estimating Guide, Form No. 179-05069)
TILE BOND™	Tack-free 5-15 mins	23 lb complete (canister with gun/hose assembly) 23 lb canister only 28 oz can with reusable straw	Up to 375 field tiles for 23 lb tank

(1) For estimated yields at other product sizes, bead sizes and conditions, contact your Dow representative or call 1-866-583-BLUE (2583).
(2) FROTH-PAK™ products are available in a selection of densities, formulations and sizes to meet a wide range of project specifications.
(3) Actual cure time will depend on temperature, foam thickness, the specific nozzle used, etc.
(4) Actual cure time will depend on temperature, relative humidity and size of foam bead.
(5) Estimated yield under ideal conditions based on gun foam, 3/8" bead.
(6) Estimated yield (gun foam) under ideal conditions for 36" x 60" window, 3/8" wide gap, 1" deep, 3/8" bead.

WEATHERMATE™ Straight Flashing

Property	Value
Water Vapor Transmission, ASTM E96, perm	<1
Application Temperature, °F, min.	20
UV Resistance, days 180	180
Size	4" x 100', 6" x 100', 9" x 100'

STYROFOAM™ SILL SEAL Foam Gasket

Nominal Thickness x Width	Roll Length
.25" x 3.5"	50'
.25" x 5.5"	50'

For more detailed installation information, contact your Dow representative or refer to the product literature.

Building & Construction

1 PRODUCT NAME
THERMAX Light Duty Insulation

2 Manufacturer

The Dow Chemical Company
Building & Construction
200 Larkin
Midland, MI 48674
1-866-583-BLUE (2583)
Fax 1-989-832-1465
www.dowstyrofoam.com/architect

3 Product Description

THERMAX* Light Duty insulation consists of a glass-fiber-reinforced polyisocyanurate foam core faced with nominal 1.25 mil embossed white acrylic-coated aluminum on one side and 1.25 mil embossed aluminum on the other. It can be installed exposed to the interior without a thermal barrier.

THERMAX Light Duty offers high, long-term R-value**. The facers help prevent water and water vapor intrusion into the insulation foam, and allow the foam to stabilize at a higher R-value. Used in conjunction with the appropriate joint closure system for the application, THERMAX Light Duty with its low perm rating helps to prevent moisture condensation within and behind the insulation.

BASIC USE

THERMAX Light Duty is designed as an insulation and interior finish system for walls and ceilings in metal, wood post frame, and concrete or masonry buildings, as governed by building codes. The tough 1.25 mil white embossed aluminum surface of THERMAX Light Duty makes a durable insulation/finish choice for use in light-impact areas. It can be pressure-washed up to 1,000 psi with a 15-degree or greater spray tip (at minimum 3' distance).

SIZES

Width and length:
4' x 8', 4' x 10'
Edge treatments:
Square edge, shiplap

Product thicknesses and R-values are shown in Table 1. Not all products are available in all parts of the country. Additional product sizes are available by custom order. Consult a Dow representative about other sizes and lead-time requirements.

TABLE 1

THERMAX Light Duty Insulation R-Values

Nominal Foam Thickness, in.	Stabilized R-Value[1,2]
0.5	3.3
0.75	5.0
1.0	6.5
1.25	8.0
1.55	10.0
1.75	11.4
2.0	13.0
2.5	15.8
3.0	19.0

(1) Stabilized R-values @ 75°F mean temperature determined in accordance with ASTM C518.
(2) R-values expressed in ft²•h•°F/Btu.

4 Technical Data

APPLICABLE STANDARDS

THERMAX Light Duty meets ASTM C1289-02 – Standard Specification for Faced Rigid Cellular Polyisocyanurate Thermal Insulation Board, Type I, Class 2 (previously known as Federal Specification HH-I-1972), which includes:

- ASTM C203 – Standard Test Methods for Breaking Load and Flexural Properties of Block-Type Thermal Insulation
- ASTM C209 – Standard Test Methods for Cellulosic Fiber Insulating Board
- ASTM C518 – Standard Test Method for Steady-State Thermal Transmission Properties by Means of the Heat Flow Meter Apparatus
- ASTM D1621 – Standard Test Method for Compressive Properties of Rigid Cellular Plastics
- ASTM D2126 – Standard Test Method for Response of Rigid Cellular Plastics to Thermal and Humid Aging
- ASTM E96 – Standard Test Method for Water Vapor Transmission of Materials
- ASTM D1623 – Standard Test Method for Tensile and Tensile Adhesion Properties of Rigid Cellular Plastics

*Trademark of The Dow Chemical Company

**R means resistance to heat flow. The higher the R-value, the greater the insulating power. R-value determined by ASTM C518.

5 Installation

Boards of THERMAX™ Light Duty are lightweight and can be sawed or cut with a knife. They install quickly to walls and ceilings – inside and outside of purlins, trusses or bar joints. Butt joints must be installed over structural members. The surface of the insulation at all joints must be continuously sealed with tape or with one of Dow's joint closure systems.

Contact a local Dow representative or access the literature library at www.dowstyrofoam.com/architect for more specific instructions.

6 Availability

THERMAX™ Light Duty insulation is manufactured in several locations and is distributed through an extensive network. For more information, call 1-800-232-2436.

7 Warranty

Fifteen-year limited thermal warranty.

8 Maintenance

Not applicable.

9 Technical Services

Dow can provide technical information to help address questions when using THERMAX™ Light Duty. Technical personnel are available to assist with any insulation project. Call 1-866-583-BLUE (2583).

10 Filing Systems

- www.dowstyrofoam.com/architect
- www.sweets.com

®™Trademark of The Dow Chemical Company ("Dow") or an affiliated company of Dow

TABLE 2

Physical Properties of THERMAX Light Duty Insulation	
Property and Test Method	**Value**
Compressive Strength[1], ASTM D1621, psi, min.	25.0
Flexural Strength, ASTM C203, psi, min.	40.0
Water Absorption, ASTM C209, % by volume, max.	0.03
Water Vapor Permeance, ASTM E96, perms, max.	<0.03
Maximum Use Temperature, °F	250
Light Reflectance, Visual Light Spectrophotometer, %	65

(1) Vertical compressive strength is measured at 10 percent deformation or at yield, whichever occurs first.

TABLE 3

Chemical Resistance of THERMAX Light Duty Insulation	
Acid, inorganic	Not recommended
Acid, organic	Excellent
Alcohol	Excellent
Asphalt, water-based	Good
Bases (caustics)	Poor
Brines and other salts	Excellent
Cements and mortar	Poor
Gases, carbon dioxide (CO_2)	Excellent
Gasoline	Excellent
Hydrocarbons	Excellent
Insecticides	Excellent
Kerosene	Excellent
Mineral oil USP	Excellent
Naphtha	Excellent
Paints, alcohol-based	Excellent
Paints, water-based	Excellent
Polyglycols, including propylene glycol	Excellent
Water[1]	Excellent

(1) Water may cause discoloration of aluminum facers. This does not impact the R-value of dry, core insulation.
NOTE: This table should be used as a guide only. For design purposes, specific test data on the intended application may be needed.

PHYSICAL/CHEMICAL PROPERTIES

THERMAX Light Duty exhibits the properties and characteristics indicated in Table 2 when tested as represented.

For chemical resistance properties of THERMAX Light Duty, see Table 3.

ENVIRONMENTAL DATA

THERMAX Light Duty is manufactured with hydrocarbon blowing agents, which have no ozone depletion potential.

FIRE PROTECTION

THERMAX products should be used only in strict accordance with product application instructions. THERMAX products, when used in a building containing combustible materials, may contribute to the spread of fire. For more information, consult MSDS and/or call Dow at 1-866-583-BLUE (2583). In an emergency call 1-989-636-4400.

CODE COMPLIANCES

THERMAX Light Duty complies with the following codes:

- International Residential Code 2003 (IRC) Section 314
- International Building Code (IBC) Section 2603
- National Evaluation Services (NES) NER-681
  BOCA – Section 2603.0 and Research Report #98-25 (replaced)
  ICBO – Section 2602 and Evaluation Report #3223 (replaced)
  SBCCI – Section 2603 and Evaluation Report 9574C (replaced)
- FM 4880 – Wall-Ceiling Construction Metal-Faced – Class 1 Fire Rated to Max. 30' High, 4.25" Thick, 4' Wide, When Installed as Described in the Current Edition of FMRC Approval Guide
- THERMAX products are covered under Underwriters Laboratories Inc. (UL) files R5622, R8181 and R2637
- UL 1256 – Fire Test of Roof Deck Constructions, Roof Deck Construction No. 120 and No. 123
- UL 723 (ASTM E84) Surface Burning Characteristics of Building Materials
- The following designs are 1, 2, 3 or 4 hour wall rated assemblies as listed in the UL Fire Resistance Directory: U026, U324, U325, U326, U330, U354, U355, U460, U902, U904, U905, U906, U907
- Fire Performance Evaluation of an Exterior Masonry Wall System Incorporating THERMAX Insulation Tested in Accordance With NFPA 285, 1998 Edition (UBC 26.9, intermediate scale – multistory testing)
- FMVSS No. 302 – Flammability of Interior Materials – Passenger Cars, Multipurpose Passenger Vehicles, Trucks and Buses (Docket No. 3-3; Notice 4)
- Miami-Dade NOA 02-0703.02 Interior Insulation on CMU Block
- Miami-Dade NOA 02-0703.03 Insulated Wall
- Miami-Dade NOA 02-0703.05 Insulated Roof Assembly

Contact your Dow sales representative or local authorities for state and local building code requirements and related acceptances.

MATERIAL SAFETY DATA SHEET

1. CHEMICAL PRODUCT & COMPANY IDENTIFICATION Page: 1

24-Hour Emergency Phone Number: 989-636-4400

Product: THERMAX(TM) 1.00 Inch Light Duty Insulation Board

Product Code: 98855

Effective Date: 07/13/05 Date Printed: 06/16/04 MSD: 007472

The Dow Chemical Company, Midland, MI 48674

Customer Information Center: 800-258-2436

2. COMPOSITION/INFORMATION ON INGREDIENTS

Modified polyisocyanurate rigid cellular polymer >45% Aluminum CAS# 007429-90-5 2-85% Tris(2-chloroisopropyl)phosphate CAS# 013674-84-5 <6% Continuous filament glass fiber 1-bromopropane CAS# 000106-94-5 <3% May contain either:

Proprietary hydrocarbon blowing agents <8% 1,1-dichloro-1-fluoroethane CAS# 001717-00-6 <15%

Note: The aluminum amount varies for each product from 2 to 82% with most products containing around 50% aluminum.

3. HAZARDS IDENTIFICATION

EMERGENCY OVERVIEW

****

* * Tan to brown foam. Odorless. No significant immediate hazards * * for emergency response are known. *

****

*

POTENTIAL HEALTH EFFECTS (See Section 11 for toxicological data.)

EYE: Solid or dust may cause irritation or corneal injury due to mechanical action. Elevated temperatures may generate vapor levels sufficient to cause eye irritation. Effects may include discomfort and redness.

SKIN: May cause itching. May cause skin irritation due to mechanical abrasion. No adverse effects anticipated by skin absorption.

(Continued on page 2 , over)

* OR (R) INDICATES A TRADEMARK OF THE DOW CHEMICAL COMPANY

INGESTION: Swallowing is unlikely because of the physical state. May cause choking if swallowed.

INHALATION: Dusts or fibers generated in processing may cause irritation of the upper respiratory tract (nose and throat). Dust or fume generated by welding, burning, melting, cutting, brazing, grinding and possibly machining, etc., may cause respiratory irritation and other effects. Symptoms of excessive exposure may be anesthetic or narcotic effects; dizziness and drowsiness may be observed. For 1,1-dichloro-1-fluoroethane (HCFC 141b): may cause central nervous system effects. Excessive exposure may increase sensitivity to epinephrine and increase myocardial irritability (irregular heartbeats). Concentrations of the blowing agent(s) anticipated incidental to proper industrial handling are not expected to cause acute inhalation effects.

SYSTEMIC (OTHER TARGET ORGAN) EFFECTS: Repeated exposures to dusts of this material are not anticipated to result in systemic toxicity or permanent lung injury; however, excessive exposures may cause less severe respiratory effects. Repeated exposure to particles generated by grinding fiberglass-reinforced materials may result in implantation of particles in the skin. In laboratory animals, repeated inhalation exposure to 8000 ppm dichlorofluoroethane produced no adverse effects; higher concentrations produced only minor biochemical changes such as an increase in cholesterol. Contains component(s) which have been reported to cause effects on the following organs in animals: kidney, liver, nervous system, male reproductive organs, female reproductive organs. Other additives are encapsulated in the product and are not expected to be released under normal processing conditions.

CANCER INFORMATION: Direct administration (injection) of polyurethane dust into lungs of rats resulted in benign tumors; this route of administration delivers large particles to the lungs and is not relevant to industrial exposure. The fiberglass in this product is continuous filament fiberglass. Based on available data, IARC concluded that there is inadequate evidence of carcinogenicity in laboratory animals and in humans for continuous filament fiberglass. Benign testicular tumors were observed in rats exposed to high concentrations (5000 ppm or higher) of dichlorofluoroethane for 2 years; no tumors were observed at 1500 ppm. The significance of these findings is considered equivocal.

(Continued on page 3)
* OR (R) INDICATES A TRADEMARK OF THE DOW CHEMICAL COMPANY

TERATOLOGY (BIRTH DEFECTS): Contains component(s) which did not cause birth defects in animals; other fetal effects occurred only at doses toxic to the mother. The component(s) is/are 1,1-dichloro-1-fluoroethane and 1-bromopropane.

REPRODUCTIVE EFFECTS: In a 2-generation reproduction study, no reproductive effects were observed in rats exposed to 8000 ppm dichlorofluoroethane. Slight effects were observed in rats exposed to 20,000 ppm. Effects included minimal decreases in the number of litters and in litter size, and delayed sexual maturation of male offspring believed to be secondary to the slower growth rate of the animals. Contains 1-bromopropane which has been shown to interfere with reproduction and fertility in animal studies. Testing has indicated that normal handling and cutting are unlikely to result in exposure levels of 1-bromopropane sufficient to cause the listed effects.

4. FIRST AID

EYE: Flush eyes thoroughly with water for several minutes. Remove contact lenses after initial 1-2 minutes and continue flushing for several additional minutes. If effects occur, consult a physician, preferably an ophthalmologist.

SKIN: Wash skin with plenty of water.

INGESTION: If swallowed, seek medical attention. May cause gastrointestinal blockage. Do not give laxatives. Do not induce vomiting unless directed to do so by medical personnel.

INHALATION: Move person to fresh air. If not breathing, give artificial respiration. If breathing is difficult, oxygen should be administered by qualified personnel. Call a physician or transport to a medical facility.

NOTE TO PHYSICIAN: Exposure may increase "myocardial irritability". Do not administer sympathomimetic drugs such as epinephrine unless absolutely necessary. No specific antidote. Treatment of exposure should be directed at the control of symptoms and the clinical condition of the patient.

5. FIRE FIGHTING MEASURES

FLAMMABLE PROPERTIES FLASH POINT: Not applicable

(Continued on page 4 , over)
* OR (R) INDICATES A TRADEMARK OF THE DOW CHEMICAL COMPANY

METHOD USED: Not applicable
AUTOIGNITION TEMPERATURE: Not applicable

FLAMMABILITY LIMITS
LFL: Not applicable
UFL: Not applicable

HAZARDOUS COMBUSTION PRODUCTS: During a fire, smoke may contain the original material in addition to combustion products of varying composition which may be toxic and/or irritating. In smoldering or flaming conditions, carbon monoxide, carbon dioxide and carbon are generated. Combustion products may include and are not limited to: nitrogen oxides, carbon monoxide, carbon dioxide. Combustion products may include trace amounts of: hydrogen fluoride, hydrogen cyanide, hydrogen chloride, hydrogen bromide, aromatic hydrocarbons.

OTHER FLAMMABILITY INFORMATION: Mechanical cutting, grinding or sawing can cause formation of dusts. To reduce the potential for dust explosion, do not permit dust to accumulate. This product contains a flame retardant to inhibit accidental ignition from small fire sources. Dense smoke is emitted when burned without sufficient oxygen.

EXTINGUISHING MEDIA: Water, dry chemical fire extinguishers and carbon dioxide fire extinguishers.

FIRE FIGHTING INSTRUCTIONS: Keep people away. Isolate fire area and deny unnecessary entry. Soak thoroughly with water to cool and prevent re-ignition. Cool surroundings with water to localize fire zone. Hand held dry chemical or carbon dioxide extinguishers may be used for small fires.

PROTECTIVE EQUIPMENT FOR FIRE FIGHTERS: Wear positive-pressure, self-contained breathing apparatus (SCBA) and protective fire fighting clothing (includes fire fighting helmet, coat, pants, boots, and gloves). If protective equipment is not available or not used, fight fire from a protected location or safe distance.

6. ACCIDENTAL RELEASE MEASURES (See Section 15 for Regulatory Information)

PROTECT PEOPLE: Use appropriate safety equipment. For additional information, refer to Section 8, Exposure Controls/Personal Protection.

(Continued on page 5)
* OR (R) INDICATES A TRADEMARK OF THE DOW CHEMICAL COMPANY

PROTECT THE ENVIRONMENT: Prevent from entering into soil, ditches, sewers, waterways and/or groundwater. See Section 12, Ecological Information.

CLEANUP: Sweep up. Use explosion proof vacuum to clean up dust generated during fabrication. Collect in suitable and properly labeled containers. See Section 7, Handling and Storage for additional information. See Section 13, Disposal Considerations for additional information.

7. HANDLING AND STORAGE

HANDLING: This product is combustible and may constitute a fire hazard if improperly used or installed. When installed, this product should be adequately protected as directed by national building regulations or instructions in the specific application brochure. No smoking, open flames or sources of ignition in handling or storage area.

Mechanical handling equipment can cause formation of dusts. Maintain good housekeeping. Layers of flammable dusts should not be permitted to accumulate. Keep dust away from ignition sources. Provide adequate local ventilation and appropriate dust handling systems.

Fabrication methods which involve cutting into the product may release blowing agent remaining in the cells. Provide adequate ventilation to assure localised concentrations in release areas are maintained below the lower flammability limit. See Section 8, Exposure Controls/Personal Protection.

STORAGE: Store in cool, well ventilated area away from sources of ignition. Maintain good housekeeping to minimize dust accumulation.

8. EXPOSURE CONTROLS/PERSONAL PROTECTION

ENGINEERING CONTROLS: Provide general and/or local exhaust ventilation to control airborne levels below the exposure guidelines.

PERSONAL PROTECTIVE EQUIPMENT

EYE/FACE PROTECTION: Use safety glasses. If there is a potential for exposure to particles which could cause eye

(Continued on page 6 , over)
* OR (R) INDICATES A TRADEMARK OF THE DOW CHEMICAL COMPANY

discomfort, wear chemical goggles. If exposure causes eye discomfort, use a full-face respirator.

SKIN PROTECTION: Wear clean, long-sleeved, body-covering clothing. Use gloves chemically resistant to this material.

RESPIRATORY PROTECTION: Atmospheric levels should be maintained below the exposure guideline. If respiratory irritation is experienced, use an approved air-purifying respirator.

EXPOSURE GUIDELINES: 1,1-Dichloro-1-fluoroethane: AIHA WEEL is 500 ppm.

Fiber glass: ACGIH has two guidelines for continuous filament glass fibers: 1 fiber/cc for fibers longer than 5 um with an aspect ratio greater than 3:1, and 5 mg/m3 for the inhalable fraction. Dow IHG is 1 fiber/cc.

Aluminum: ACGIH TLV is 10 mg/m3; OSHA PEL is 15 mg/m3 total, 5 mg/m3 respirable, as A1, for the metal. ACGIH TLV is 5 mg/m3 for fumes, 2 mg/m3 for alkyls and soluble salts.

1-Bromopropane: Dow IHG is 5 ppm (25.2 mg/m3) TWA, ACGIH is 10 ppm TWA.

Contains proprietary ingredient for which the exposure guideline has been omitted.

9. PHYSICAL AND CHEMICAL PROPERTIES

APPEARANCE: Tan to brown foam ODOR: Odorless VAPOR PRESSURE: Not applicable VAPOR DENSITY: Not applicable BOILING POINT: Not applicable SOLUBILITY IN WATER: Not applicable SPECIFIC GRAVITY: 1.9

10. STABILITY AND REACTIVITY

CHEMICAL STABILITY: Thermally stable at typical use temperatures.

CONDITIONS TO AVOID: Avoid temperatures above 260C (500F). Exposure to elevated temperatures can cause product to decompose.

INCOMPATIBILITY WITH OTHER MATERIALS: Avoid contact with

(Continued on page 7)
* OR (R) INDICATES A TRADEMARK OF THE DOW CHEMICAL COMPANY

oxidizing materials.

HAZARDOUS DECOMPOSITION PRODUCTS: Decomposition products depend upon temperature, air supply and the presence of other materials.

HAZARDOUS POLYMERIZATION: Will not occur.

11. TOXICOLOGICAL INFORMATION (See Section 3 for Potential Health Effects. For detailed toxicological data, write or call the address or non-emergency number shown in Section 1)

MUTAGENICITY: For fiberglass: in vitro mutagenicity studies were inconclusive. For 1-bromopropane: in vitro mutagenicity studies were positive. Animal mutagenicity studies were negative. The weight of evidence from a battery of mutagenicity studies suggests that dichlorofluoroethane has a very low potential to affect genetic material.

12. ECOLOGICAL INFORMATION (For detailed Ecological data, write or call the address or non-emergency number shown in Section 1)

ENVIRONMENTAL FATE

MOVEMENT & PARTITIONING: No bioconcentration is expected because of the relatively high molecular weight (MW >1000). In the terrestrial environment, material is expected to remain in the soil. In the aquatic environment, material is expected to float.

DEGRADATION & PERSISTENCE: Surface photodegradation is expected with exposure to sunlight. No appreciable biodegradation is expected. Based largely or completely on information for blowing agent: dichlorofluoroethane (HCFC 141b) has a stratospheric ozone depletion potential of 0.11, relative to CFC 12 (ODP=1).

ECOTOXICITY: Not expected to be acutely toxic to aquatic organisms.

13. DISPOSAL CONSIDERATIONS (See Section 15 for Regulatory Information)

DISPOSAL: DO NOT DUMP INTO ANY SEWERS, ON THE GROUND, OR INTO ANY BODY OF WATER. All disposal methods must be in compliance with all Federal, State/Provincial and local laws and regulations. Regulations may vary in different locations. Waste character

(Continued on page 8 , over)
* OR (R) INDICATES A TRADEMARK OF THE DOW CHEMICAL COMPANY

izations and compliance with applicable laws are the responsibility solely of the waste generator. THE DOW CHEMICAL COMPANY HAS NO CONTROL OVER THE MANAGEMENT PRACTICES OR MANUFACTURING PROCESSES OF PARTIES HANDLING OR USING THIS MATERIAL. THE INFORMATION PRESENTED HERE PERTAINS ONLY TO THE PRODUCT AS SHIPPED IN ITS INTENDED CONDITION AS DESCRIBED IN MSDS SECTION 2 (Composition/Information On Ingredients).

FOR UNUSED & UNCONTAMINATED PRODUCT, the preferred options include sending to a licensed, permitted incinerator or other thermal destruction device, or landfill.

As a service to its customers, Dow can provide names of information resources to help identify waste management companies and other facilities which recycle, reprocess or manage chemicals or plastics, and that manage used drums. Telephone Dow's Customers Information Center at 800-258-2436 or 989-832-1556 for further details.

14. TRANSPORT INFORMATION

DEPARTMENT OF TRANSPORTATION (D.O.T.): This product is not regulated by D.O.T. when shipped domestically by land.

CANADIAN TDG INFORMATION: This product is not regulated by TDG when shipped domestically by land.

15. REGULATORY INFORMATION (Not meant to be all-inclusive--selected regulations represented)

NOTICE: The information herein is presented in good faith and believed to be accurate as of the effective date shown above. However, no warranty, express or implied is given. Regulatory requirements are subject to change and may differ from one location to another; it is the buyer's responsibility to ensure that its activities comply with federal, state or provincial, and local laws. The following specific information is made for the purpose of complying with numerous federal, state or provincial, and local laws and regulations. See other sections for health and safety information.

U.S. REGULATIONS

SARA 313 INFORMATION: This product contains the following substances subject to the reporting requirements of Section 313 of Title III of the Superfund Amendments and Reauthorization Act of 1986 and 40 CFR

(Continued on page 9)
* OR (R) INDICATES A TRADEMARK OF THE DOW CHEMICAL COMPANY

REGULATORY INFORMATION (CONTINUED) Part 372: CHEMICAL NAME CAS NUMBER CONCENTRATION

1,1-DICHLORO-1-FLUOROETHANE	001717-00-6	<15	%
ALUMINUM (FUME OR DUST)	007429-90-5 2	-85	%

SARA HAZARD CATEGORY: This product has been reviewed according to the EPA "Hazard Categories" promulgated under Sections 311 and 312 of the Superfund Amendment and Reauthorization Act of 1986 (SARA Title III) and is considered, under applicable definitions, to meet the following categories:

Not to have met any hazard category

TOXIC SUBSTANCES CONTROL ACT (TSCA):

All ingredients are on the TSCA inventory or are not required to be listed on the TSCA inventory.

STATE RIGHT-TO-KNOW: The following product components are cited on certain state lists as mentioned. Non-listed components may be shown in the composition section of the MSDS.

CHEMICAL NAME CAS NUMBER LIST

PROPANE, 1-BROMO-000106-94-5 PA1 PROPRIETARY INGREDIENT PROPRIETARY NJ1 NJ2 NJ3
PA1 1,1-DICHLORO-1-FLUOROETHANE 001717-00-6 NJ2 ALUMINUM (FUME OR DUST) 007429-90-5 NJ2 NJ3 PA3
PA1

NJ1=New Jersey Special Health Hazard Substance (present at greater than or equal to 0.1%). NJ2=New Jersey Environmental Hazardous Substance (present at greater
than or equal to 1.0%).

(Continued on page 10) , over)
* OR (R) INDICATES A TRADEMARK OF THE DOW CHEMICAL COMPANY

REGULATORY INFORMATION (CONTINUED)

NJ3=New Jersey Workplace Hazardous Substance (present at greater than or equal to 1.0%). PA1=Pennsylvania Hazardous Substance (present at greater than or equal to 1.0%). PA3=Pennsylvania Environmental Hazardous Substance (present at greater than or equal to 1.0%).

OSHA HAZARD COMMUNICATION STANDARD:

This product is not a "Hazardous Chemical" as defined by the OSHA Hazard Communication Standard, 29 CFR 1910.1200. CANADIAN REGULATIONS
==========

WHMIS INFORMATION: The Canadian Workplace Hazardous Materials Information System (WHMIS) Classification for this product is: This product is exempt under WHMIS.

CANADIAN ENVIRONMENTAL PROTECTION ACT (CEPA):

All substances in this product are listed on the Canadian Domestic Substances List (DSL) or are not required to be listed.

16. OTHER INFORMATION MSDS STATUS: Revised Section 8 (Exposure Guideline). OTHER: For further information, contact the Plastics Customer
Information Group at 1-866-583-BLUE(2583).

* OR (R) INDICATES A TRADEMARK OF THE DOW CHEMICAL COMPANY The Information Herein Is Given In Good Faith, But No Warranty, Express Or Implied, Is Made. Consult The Dow Chemical Company For Further Information.

Insulation Fact Sheet

This is Applegate Loose-fill Cellulose Insulation

Applegate Loose-fill Cellulose Insulation has been installed with the manufacturer's recommendations to provide a value of R-_____ using _____ bags of insulation to cover _____ square feet of area at a thickness of _____ inches.

Building Address

City, State, Zip

Signature of Installer

Company Name

Company City, State, ZIP

Date Installed

R & D Services, Inc. Classified Applegate Loose-Fill Cellulose Reference File: RDS-LF9587

R-Value @ 75 °F	Initial Installed Thickness (Inches)	Minimum Settled Thickness (Inches)	Maximum Net Coverage Area (Square Feet per Bag)	Number of Bags per 1,000 Square Feet	Minimum Weight per Square Foot (Pounds)
11	3.92	3.52	128.8	7.8	0.21
13	4.50	4.05	99.3	10.1	0.27
19	6.36	5.72	57.4	17.4	0.46
22	7.32	6.58	47.2	21.2	0.56
24	7.96	7.16	42.2	23.7	0.63
26	8.60	7.74	38.1	26.3	0.70
30	9.90	8.91	31.9	31.4	0.83
32	10.55	9.49	27.4	36.5	0.97
38	12.50	11.25	24.0	41.6	1.10
40	13.15	11.83	22.6	44.2	1.17
45	14.78	13.30	19.7	50.6	1.34
48	15.76	14.18	18.3	54.5	1.44
49	16.08	14.48	17.9	55.8	1.48
50	16.41	14.77	17.5	57.1	1.51
55	18.05	16.24	15.7	63.5	1.68
60	19.68	17.71	14.3	70.0	1.85

Minimum installed thickness determined according to ASTM C1374 using a Krendl 500 with gate at 5 and air at 6.5. Settings are not adjustable

APPLEGATE MANUFACTURING FACILITIES

1000 HIGHVIEW DR. WEBBERVILLE, MI 48892 800-627-7536	1925 STATE ROUTE 1241 N HICKORY, KY 42051 888-502-7753	600 INDUSTRIAL DR. BLOOMER, WI 54724 800-633-3179	230 SHOOP DR. PENROSE, CO 81240 866-568-9639	2500 JACKSON ST. MONROE, LA 71202 800-854-1907	1241 MEADOWBROOK DR. EASTANOLLEE, GA 30538 888-427-7534	1050 SUPERIOR AV. CHAMBERSBURG, PA 17201 800-231-1939

Read This Before You Buy

What You Should Know About R-Values

The chart shows the R-Value of this insulation. "R" means resistance to heat flow. The higher the R-Value, the greater the insulating power. Compare insulation R-values before you buy.

There are other factors to consider. The amount of insulation you need depends mainly on the climate you live in. Also, your fuel savings from insulation will depend upon the climate, the type and size of your house, the amount of insulation already in your house, and your fuel use patterns and family size. If you buy too much insulation, it will cost you more than what you'll save on fuel.

To get the marked R-Value, it is essential that this insulation be installed properly.

Chart based on settled thickness, a nominal bag weight of 26.5 lbs and coverage based on the Krendl 500 blowing machine. Machine settings are not adjustable. Stated R-value is provided by installing the required number of bags per 1,000 sq ft at a minimum installed thickness. Installation of the required number of bags may yield more than the specified minimum thickness and minimum weight per sq ft. Actual coverage will be influenced by job conditions and application techniques and may vary as much as 10% without significantly affecting the stated R-value. Failure of the installer to provide at least the required number of bags per 1,000 sq ft and at least the minimum thickness may result in a lower installed R-value. Compaction may occur during installations above R-30, requiring more than the stated number of bags to obtain the minimum installed thickness. This product is intended for dry loose-fill attic application. This coverage chart does not apply to spray-applied application. Do not add water to this product in attic applications.

Except the LORD build the house, they labour in vain that build it... (Psalm 127:1)

© 2015, Applegate Insulation
0235-01 ADA10-15

1. PRODUCT NAME
Constant Pressure Dispensing System (CPDS™ Series 2).
Item # 4505500150

2. MANUFACTURER
Convenience Products
866 Horan Dr., Fenton, MO 63026 USA
(636) 349-5855
(800) 325-6180
FAX: (636) 349-5335
E-mail: support@touch-n-seal.com
Website: www.touch-n-seal.com

3. PRODUCT DESCRIPTION
The Touch 'n Seal® CPDS Series 2 is an inexpensive, low maintenance dispensing mechanism that, when used according to manufacturer's directions, applies Class I fire retardant, thermal insulating and sound attenuating 2-component polyurethane spray foam. Touch 'n Seal spray foam is permanent and dries within minutes of application.

The Touch 'n Seal CPDS Series 2 uses disposable chemical cylinders and dispenses polyurethane spray foam using a unique air compressor, system controls and standard 120V electrical supply. In the absence of electricity, the system may be operated using dry pressurized nitrogen or compressed air.

Using a constant delivery rate, the CPDS Series 2 applies polyurethane spray foam to horizontal/vertical surfaces up to 150' away (46 meters). Chemical calibration is not required.

At approximately 24.5"W x 33"D x 48" H (62 x 84cm) the Touch 'n Seal CPDS Series 2 is small enough to be transported in a standard pick-up truck, and fits easily through most doors and entrances. The empty unit weighs less than 155 pounds (70 kg).

Basic Use
The CPDS Series 2 provides many of the features of a "bulk" spray foam system when used with Touch 'n Seal CP660 FR, CP750 FR and CP1200 FR 2-component foam kits. Touch 'n Seal foams offer superior insulation performance, protect against energy-robbing air infiltration, and retard vapor migration while reducing home and commercial building energy consumption.

Sizes
(*CP660 FR Foam Kits, # 4505500660)*
660 board feet (61.3 m^2 @ 25 mm) @ 2.0 pcf density (32 ± 3.2 kg m^3)
(CP750 FR Foam Kits, #4505500750)
750 board feet (69.68 m^2 @ 25 mm) @ 1.75 pcf density (28.03 kg /m^3)
(CP1200 FR Foam Kits, # 4505501200)
1200 board feet (111.5m^2 @ 25mm) @ 1.0 - 1.25 pcf density (16.0 – 20.0 kg/m^3)

Features/Benefits (CP750 FR and CP1200 FR Foam Kits)
- Class 1, fire retardant foam
- Easy to transport
- No expensive maintenance
- Low investment cost
- No deposit/No return
- Reduces energy loss by as much as 40%
- Reduces use of fossil fuels and improves air quality
- Permanent insulation; does not shrink or settle like cellulose; maintains air seal
- Compatible with all fiber insulation systems including cellulose, fiberglass and rockwool
- No Ozone Depleting Chemicals
- Helps to reduce Green House Gas Emissions
- Expands to fill smallest to largest gaps, cracks and holes, reducing air exchanges
- High R-value
- Open and closed cell formulas
- Allows for down-sized HVAC systems; uses less energy, fewer cycle times, more consistent "comfort level", reduces equipment maintenance
- Significantly increases structural strength; important in high wind situations (per the Spray Polyurethane Foam Alliance)

Limitations (CP750 FR and CP1200 FR Foam Kits)
- Not for use as an exterior roofing system.
- Do not expose to temperatures above 250°F (121°C), open flames or sparks.
- Do not expose to ultraviolet light.
- Chemical contents must be 70°F - 90°F (21° - 32°C) prior to spraying.
- Do not store in temperatures above 120°F (49°C).
- Always refer to local building code regulations.
- Certain structures such as cold storage and freezers have very specific design criteria. Ensure the structure has been designed by an appropriate design professional.
- For best adhesion, apply first layer ½" (12mm) thick. Apply additional foam in 1" (25mm) thick layers. Allow foam to cool between the application of additional layers.
- Product is not a fire stop.
- Do not leave product exposed. Cover with approved facings

4. TECHNICAL DATA (CP750 FR and CP1200 FR Foam Kits)
Applicable Standards
- ASTM G21 Fungi Resistance
- ASTM E84 Surface Burning Characteristics
- ASTM E96 Water Vapor Transmission
- ASTM E 283 Air Permeance
- ASTM C518 R-Value
- ASTM D1621 Compressive Strength
- ASTM D1622 Density
- ASTM D1623 Tensile Strength
- ASTM D2126 Thermal and Humid Aging – Dimensional Stability
- ASTM D6226 Closed Cell Content

Approvals/Certifications
- International Residential Code
- California Bureau of Home Furnishings and Insulation (CP750 FR)

Physical/Chemical Properties
See Table 1. Test data available upon request.



Fire Performance
- See Table 1

Shelf Life
1 year in unopened container when stored between 60° - 90°F (16° - 32°C), in a cool, dry, well-ventilated area.

Storage & Disposal
Keep containers tightly closed in a cool, dry, well-ventilated area. Ideal storage temperature is 60° - 90°F (16°- 32°C). Storage above 90°F (32°C) will reduce shelf life. Do not store at temperatures above 120°F (49°C). Do not expose containers to conditions that may damage, puncture, or burst the containers. Dispose of leftover material/containers in accordance with federal, state and local regulations. See Material Safety Data Sheet for more information.

5. INSTALLATION / APPLICATION
Please refer to CPDS Series 2 Installation, Set Up and Operation Instructions" found inside the "A" canister carton or request a faxed set of these instructions by calling Customer Service at 800-325-6180.

Always refer to local building codes prior to application of Touch 'n Seal spray foam. Touch 'n Seal spray foam can be applied to and will adhere to almost any traditional building material surfaces including; wood, concrete, polystyrene, gypsum board, fiberboard, masonry and metal.

Surfaces to be sprayed must be dry, clean and free of dust, dirt, grease and other substances that may inhibit proper adhesion.

For best results apply Touch 'n Seal spray foam when surface and ambient temperatures are between 60° - 90°F (16° - 32°C). Chemical contents must be between 70° - 90°F (21° - 32°C) before dispensing. Use all chemical contents within 30 days of initial dispensing.

Keep out of reach of children. Always wear proper personal protective equipment, including head covering, gloves, clothing, eyewear and respirator. Use in well-ventilated area.

6. AVAILABILITY & COST

Availability

Touch 'n Seal CPDS Series 2 units and spray polyurethane foams are available throughout the U.S., Canada, Mexico and the world. Contact Convenience Products Customer Service at 800-325-6180 or FAX 636-349-1708 for distributor information.

Cost

Contact Convenience Products for local distributors who can provide cost and delivery information.

7. WARRANTY

Convenience Products warrants its CPDS Series 2 to be free of defects in workmanship and function.

Further, Convenience Products provides a limited, six (6) month warranty on the CPDS Series 2 air compressor, wheels, and canisters if the CPDS Series 2 is used in the manner intended. Such limited warranty is for replacement of the listed items.

Convenience Products is not liable for any incidental, consequential or any other damages or remedies. There are no warranties that extend beyond the description herein, however, certain states have specific laws regarding limitation on incidental or consequential damages, in which case, you may have other legal rights.

8. MAINTENANCE

Minor. See owners' manual.

9. TECHNICAL SERVICE

Technical assistance, including detailed information, product literature, test results, assistance with preparing project specifications and application training is available by contacting Convenience Products.

10. FILING SYSTEMS

Additional information is available from the manufacturer upon request.

The information contained herein was accurate at the time of publishing. Please refer to the Touch 'N Seal website for the latest information.

PROPERTIES OF TOUCH 'N SEAL SPRAY POLYURETHANE FOAM

	CP1200 FR (Open Cell)	CP750 FR (Closed Cell)		CP660 FR (Closed Cell)
Shelf Life	1 year; unopened container	1 year; unopened container		1 year; unopened container
Output	1200 board feet (111.5 m^2 @ 25 mm)	750 board feet (69.68 m^2 @ 25 mm)		660 board feet (61.3 m^2 @ 25 mm)
Dry time/Tack Free Time	30 - 60 seconds	30 – 60 seconds		30 – 60 seconds
Typical Output – 30' (9 m) Hose	4 - 5 lbs/min. (1.8 - 2.3 kg/min.)	4 - 5 lbs/min. (1.8 - 2.3 kg/min.)		------
Fully Cured	Approximately 1 hour	Approximately 1 hour		Approximately 1 hour
Cuttable	2 - 5 minutes	2 - 5 minutes		2 - 5 minutes
ASTM G21 Fungi Resistance	Does not support growth	Does not support growth		Does not support growth
ASTM E84 Surface Burning Characteristics @ 2" (51 mm)		Class 1 @ 2" (51mm) thick	Class 1 @ 3" (75mm) wide bead	
Flame Spread	10	25	10	20
Smoke Development	250	350	50	350
ASTM E96 Water Vapor Transmission	5.4 perms@ 1 in. (25 mm)	2.80 perms@ 1 in. (25 mm)		3.45 perms@ 1 in. (25 mm)
ASTM E 283 Air Permeance	0.003 cfm/ft^2 @1"	0.001 cfm/ft^2 @1/2"		0.0004 cfm/ft^2 @ 1.57 psf 0.002 L/s/m^2 @ 75 Pa
ASTM C518 R-Value - Initial	4.96 / in. (25 mm)	7.12 / in. (25 mm)		6.3 / in. (25 mm)
– Aged (28 days)	4.1/ in. (25 mm)	5.48 / in. (25 mm)		5.1 / in. (25 mm)
ASTM D1621 Compressive Strength	5 psi (0.92 kgf /cm2)	13.1 psi (0.92 kgf /cm^2)		31.0/214 kPa
ASTM D1622 Density	1.0 – 1.25 pcf/16.0 - 20.0 kg m^3	1.75 ± .10 pcf (28.03 ± 1.60 kg/m^3)		2.0 pcf ± .2 pcf (32 ± 3.2 kg m^3)
ASTM D1623 Tensile Strength	N/A	38.23 psi (2.69 kgf/cm^2)		30.8 psi/212 kPa
ASTM D2126 Thermal and Humid Aging –	N/A	Linear	Mass	Mass	
Dimensional Stability					
-40°F (-40ºC) 2 weeks	N/A	+0.05%	+0.10%	+0.10%	0.9%
158°F (70ºC) 2 weeks		+1.90%	-2.95%	-2.95%	5.7%
Combined -40°F (-40ºC) 2 weeks & 158°F (70ºC) 2 weeks		+1.85%	-2.85%	-2.85%	1.6%
ASTM D-2842 Water absorption	3 - 4% by volume	N/A			2.7%
ASTM D6226 Closed Cell Content	< 10%	> 90%			> 92%
AC 377 Appendix X - Use in Attic & Crawl Spaces					Passed. Refer to independent laboratory test reports.
International Residential Code	Compliant	Compliant			Compliant
Coast Guard Title 33 CFR, Paragraph 83.114	N/A	N/A			Meets Criteria
California Bureau of Home Furnishings and Insulation	N/A	Filed			N/A

TECH DATA SHEET

1. PRODUCT NAME
Touch 'n Seal® Foam Kit 1.75 pcf FR ICC

2. MANUFACTURER
Convenience Products
866 Horan Dr.
Fenton, MO 63026 USA
Phone: (636) 349-5855
Toll Free: (800) 325-6180
FAX: (636) 349-5335
E-mail: support@touch-n-seal.com
Website: www.touch-n-seal.com

3. PRODUCT DESCRIPTION
Touch 'n Seal Foam Kit 1.75 pcf FR ICC is a two-component foam system, available in a variety of low-pressure dispensing units. When used according to manufacturer's directions, Foam Kit 1.75 pcf FR ICC produces a closed cell rigid polyurethane foam with ASTM E-84 Class A(I) fire resistance. The system complies with 2006, 2009 and 2012 IBC, IRC, and IECC as supported by ICC Evaluation Services listing ESR-3052

Basic Use

Touch 'n Seal Foam Kit 1.75 pcf FR ICC i**s suitable for Type V(B) construction where code jurisdictions require an ICC-ES listing to demonstrate code compliance.**

Sizes:

Product	Yield, Bd. ft.*	Item #
FOAM KIT 200 1.75 PCF FR ICC	200	4004001200
FOAM KIT 600 1.75 PCF FR ICC	600	4004521600
FOAM KIT 600 1.75 PCF FR ICC Replacement	600	4004521601
CP-750 1.75 PCF FR ICC	750	4505500750
RF-17 1.75 PCF FR ICC	2000	4505200000
RF-60 1.75 PCF FR ICC	6800	4505170000
RF-120 1.75 PCF FR ICC	15,400	4505113000

Features/Benefits

- Medium density spray polyurethane foam insulates and seals
- Saves energy
- Increases comfort by reducing drafts
- Foam Kits contain everything needed – ready to use
- No shaking or pre-mixing required
- Applied with patented no-crossover applicator
- Closed cell structure
- Cured foam does not shrink or settle
- Reduces vibration and sound transmission
- Low-odor formulation
- Easy to transport
- Low maintenance
- Increases structural strength
- 15 month shelf life

Limitations

- Chemical contents must be 70° - 90°F (21° – 32°C) prior to spraying.
- Surface and ambient temperatures should be between 60° - 90°F (16° – 32°C).
- Foam is combustible. Do not expose to temperatures above 250°F (121°C), open flames or sparks.
- Do not expose uncoated foam to sunlight or UV.
- Do not use for filling closed gypsum board stud wall cavities
- Product is not a fire stop.
- Refer to local building code authorities for guidance in construction applications. Ignition or thermal barrier coating may be required over exposed foam.

4. TECHNICAL DATA
Applicable Methods & Standards

- ASTM G21 Fungi Resistance
- ASTM E84 Surface Burning Characteristics
- ASTM E96 Vapor Permeance
- ASTM E283 Air Permeance
- ASTM C518 R-Value
- ASTM D1621 Compressive Strength
- ASTM D1622 Density
- ASTM D1623 Tensile Strength
- ASTM D2126 Dimensional Stability
- ASTM D6226 Closed Cell Content

5. SAFE USE AND HANDLING

- Keep out of reach of children.
- Always wear proper personal protective equipment, including head covering, gloves, clothing, eyewear and respirator
- Use in well-ventilated area
- Refer to product Safety Data Sheet (SDS) and the "Safe Use, Storage and Handling for Low Pressure Spray Foam Products" brochure, both available from Customer Service at 800-325-6180 or at www.touch-n-seal.com prior to handling or using Touch 'n Seal products.

Storage & Disposal

- Store containers tightly closed in a well-ventilated area between 60° - 90°F (16° – 32°C). Storage above 90°F (32°C) will reduce shelf life.
- Storage below 60°F (16°C) may cause crystals to form in A-component.
- Do not store at temperatures above 120°F (49°C).
- Do not expose containers to conditions that may damage, puncture, or burst the containers.
- Dispose of leftover material / containers in accordance with federal, state and local regulations.
- See Safety Data Sheet for more information.
- Refer to "Foam Kit Operation Instructions" for storage of partially used disposable Foam Kits.

Shelf Life

15 months in unopened container when stored between 60° - 90°F (16° – 32°C), in a dry, well-ventilated area.

TECH DATA SHEET

6. INSTALLATION / APPLICATION

Refer to local building code authorities for guidance in construction applications. Touch 'n Seal spray foam can be applied to and will adhere to almost any traditional building material surfaces including; wood, concrete, polystyrene, gypsum board, fiberboard, masonry and metal.

Surfaces to be sprayed must be dry, clean and free of dust, dirt, grease and other substances that may inhibit proper adhesion. For best results apply Touch 'n Seal Slow Rise foam when surface and ambient temperatures are between 60° - 90°F (16° – 32°C). Chemical contents must be between 70° - 90°F (21° – 32°C) before dispensing.

Use all chemical contents within 30 days of initial dispensing.

7. AVAILABILITY

Touch 'n Seal Two Component Spray Foam Kits are available throughout the U.S., Canada, Mexico and the world. Contact Convenience Products Customer Service at 800-325-6180 or FAX 636-349-1708 for distributor information

8. WARRANTY

Convenience Products warrants this product to be free from defects. The Company shall not be liable for any consequential or other damage or remedy; its sole obligation and your exclusive remedy are limited to product replacement. Warranty is null and void if unit is operated without attaching a new spray foam applicator gun/hose set. Some states do not allow limitations on the exclusive or limitation of incidental or consequential damages, so the above limitations or exclusions may not apply to you. This warranty gives you specific legal rights, and you may also have other rights which vary from state to state. There are no warranties which extend beyond the description on the face hereof.

9. MAINTENANCE

Refer to "Foam Kit Operation Instructions."

10. TECHNICAL SERVICE

Technical assistance, including detailed information, product literature, test results, assistance with preparing project specifications and application training is available by contacting Convenience Products.

TYPICAL PROPERTIES OF Touch 'n Seal® Foam Kit 1.75 pcf FR ICC

Property	Test Method	Typical Values	
Shelf Life		15 months; unopened container	
Dry time / Tack Free Time		45 seconds	
Cuttable Time		5 minutes	
Fully Cured Time		1 hour	
R-Value, aged 1 in. 2 in.	ASTM C518	 5.4 h·ft^2·°F/Btu (0.95 K·m^2/W) 11 h·ft^2·°F/Btu (1.9 K·m^2/W)	
Compressive Strength	ASTM D1621	**31 psi (21 kPa)**	
Tensile Strength	ASTM D1623	31 psi (21 kPa)	
Density, Free Rise	ASTM D1622	1.75 pcf (28 kg/m^3)	
Surface Burning Characteristics 2" thickness Flame Spread Index Smoke Developed	ASTM E84	 15 350	
Vapor Permeance	ASTM E96	1.77 perm @ 1 in. (25 mm) 0.98 perm @ 2 in. (50 mm) 0.69 perm @ 3 in. (75 mm)	
Air Permeance	ASTM E283	< 0.004 CFM / ft^2 (< 0.02 L/s/m^2)	
Dimensional Stability, % volume change	ASTM D2126	- 4 °F (- 20°C)	0.9%
		158°F (70°C) / 97% r.h.	5.7%
		176 °F (80°C)	1.6%
Sound Transmission Class (STC Rating)	ASTM C90	32 @ 1 ½ in. (38 mm)	
Closed Cell Content	ASTM D6226	>90%	
Fungi Resistance	ASTM C1338	Does not support growth	

**Theoretical yield is used as an industry standard to represent the size of two-component foam kits. The calculation is based upon ideal conditions, does not include blowing agent loss, and may vary according to application method or environmental factors.*

The higher the R-value the greater the insulating power. Ask your seller for the fact sheet on R-values.

The information contained herein was accurate at the time of publishing. Please refer to the Touch 'N Seal website for the latest information.

Convenience Products
866 Horan Dr., Fenton, MO 63026 USA
(800) 325-6180, (636) 349-5855 tel.

MADE IN U.S.A.

Material Safety Data Sheet

NFPA	HMIS	PPE	Transport Symbol
			

Issuing Date 27-Feb-2007 **Revision Date 12-Nov-2012** **Revision Number 5**

1. PRODUCT AND COMPANY IDENTIFICATION

Product Name
Component A for:
Touch 'n Seal® Foam kit Class I FR Foam
Touch 'n Seal Refillable Class I FR Foam
Touch 'n Seal CPDS Class I FR Foam
Touch 'n Seal Mine Foam
Touch 'n Seal Rib & Roof Foam Sealant
Touch 'n Seal Foam Kit Low Density

Product ID No: MSDS / A MF-FR

Recommended Use Sealant, Insulation

Supplier Address
Convenience Products, Division of Clayton Corp.
866 Horan Drive
Fenton, MO 63026-2416 USA
TEL: (636) 349-5333

Emergency Telephone Number
Chemtel 1-800-255-3924
(813) 248-0585 outside US

2. HAZARDS IDENTIFICATION

WARNING!

Emergency Overview

Contents under pressure.
May be harmful if swallowed or inhaled.
May cause allergic skin reaction.
May cause allergic respiratory reaction.
Persons allergic to isocyanates, and particularly those suffering from asthma or other respiratory conditions, should not work with isocyanates.
Vapors may be irritating to eyes, nose, throat, and lungs.
May cause drowsiness and dizziness.
Keep upwind of spill. Stay out of low areas

Appearance Pale Amber **Physical State** Liquid Aerosol **Odor** Faint hydrocarbon

Potential Health Effects

Principle Routes of Exposure Inhalation, Skin contact, Eye contact.

Acute Toxicity

Eyes Irritating to eyes. May cause slight temporary corneal injury due to adhesive character.

Skin

Prolonged or repeated exposure may cause slight skin irritation. Material will stick to skin causing irritation upon removal. Animal studies have shown that skin contact with isocyanates may play a role in causing respiratory sensitization. Repeated or prolonged skin contact may cause allergic reactions with susceptible persons.

Skin Absorption

A single prolonged exposure is unlikely to result in the material being absorbed in harmful amounts.

Inhalation

Maintain local exhaust ventilation system during use. If large concentrations of vapors build up they could cause upper respiratory tract and lung irritation. May cause allergic respiratory reaction. Inhalation of vapors in high concentration may cause shortness of breath (lung edema).

Ingestion

May be harmful if swallowed. May cause additional affects as listed under "Inhalation". Ingestion may cause gastrointestinal irritation, nausea, vomiting and diarrhea. Product may cure in the gastrointestinal tract and form an obstruction. May cause adverse cardiac effects, blood disturbances, and metabolic acidosis.

Chronic Effects

Tissue injury in the upper respiratory tract and lungs has been observed in laboratory animals after repeated excessive exposures to MDI / Polymeric MDI aerosols. Intentional misuse by deliberately concentrating and inhaling contents may be harmful or fatal. Repeated or prolonged contact causes sensitization, asthma and eczemas.

Birth / Developmental Effects:

In laboratory animals, MDI/Polymeric MDI did not cause birth defects; other fetal effects occurred only at high doses that were toxic to the mother.

Aggravated Medical Conditions

Allergies. Skin disorders. Respiratory disorders. Central nervous system. Preexisting eye disorders. Kidney disorders. Liver disorders.

Interactions with Other Chemicals

Irritants. Sensitizers. Epoxies. Use of alcoholic beverages may enhance toxic effects.

3. COMPOSITION/INFORMATION ON INGREDIENTS

Chemical Name	CAS-No	Weight %
1,1,1,2 – Tetrafluoroethane (HFC-134a, Fluorocarbon)	811-97-2	7-14
Polymethylene polyphenylene isocyanate	9016-87-9	30-60
Methylene bisphenyl isocyanate (MDI)	101-68-8	30-60
Methylenediphenyl diisocyanate	26447-40-5	5-10

4. FIRST AID MEASURES

General Advice

If emergency warrants call 911 or emergency medical service. Show this safety data sheet to the doctor in attendance. Remove and wash soiled clothing before reuse.

Eye Contact

Immediately flush with plenty of water. After initial flushing, remove any contact lenses and continue flushing for at least 15 minutes. Keep eye wide open while rinsing. Obtain medical attention, preferably from an ophthalmologist.

Skin Contact

Remove contaminated clothing; wash before reuse. Foam will stick to skin; studies demonstrate that cleaning very soon after exposure with corn oil or nail polish remover is most effective. If foam dries on skin, apply generous amounts of petroleum jelly or lanolin, put on plastic gloves and wait 1 hour. With a clean cloth, firmly wipe off petroleum jelly and repeat process if necessary. Do not attempt to remove dried foam with solvents.

Inhalation	Move victim to fresh air. Apply artificial respiration if victim is not breathing. If breathing is difficult, oxygen should be administered by qualified personnel. Call a physician or transport to a medical facility.
Ingestion	Call a physician or Poison Control Center immediately. May produce an allergic reaction. Do not induce vomiting unless directed to do so by medical personnel. Drink plenty of water. Never give anything by mouth to an unconscious person.
Notes to Physician	Maintain adequate ventilation and oxygenation of the patient. May cause asthma-like (reactive airways) symptoms. May cause respiratory sensitization or asthma-like symptoms. Respiratory symptoms, including pulmonary edema, may be delayed. Exposure may increase "myocardial irritability". If you are sensitized to diisocyanates, consult your physician regarding working with other respiratory irritants or sensitizers. No specific antidote. Treatment of exposure should be directed at the control of symptoms and the clinical condition of the patient.
Protection of First-aiders	Ensure that medical personnel are aware of the material(s) involved, and take precautions to protect themselves.

5. FIRE-FIGHTING MEASURES

Flammable Properties	Foam cylinders exposed to fire can rupture.
Flash Point	None
Suitable Extinguishing Media	Isolate fire and deny unnecessary entry. Use an extinguishing agent suitable for type of surrounding fire. Dry chemical, CO_2, water spray, fog or regular foam. Stay upwind. Keep out of low areas where gases fumes can accumulate. Move containers from fire area if you can do it without risk. Damaged cylinders should be handled only by specialists.

Explosion Data

Sensitivity to mechanical impact	None
Sensitivity to static discharge	None
Specific Hazards Arising from the Chemical	Ruptured cylinders may rocket.
Protective Equipment and Precautions for Firefighters	As in any fire, wear self-contained breathing apparatus pressure-demand, MSHA/NIOSH (approved or equivalent) and full protective gear.

NFPA	**Health Hazard** 2	**Flammability** 1	**Stability** 1	**Physical and Chemical Hazards** -
HMIS	**Health Hazard** 2*	**Flammability** 1	**Stability** 1	**Personal Precautions** -B

6. ACCIDENTAL RELEASE MEASURES

6. ACCIDENTAL RELEASE MEASURES

Personal Precautions

Do not touch or walk through spilled material. Use appropriate safety equipment. Evacuate area. Keep personnel out of low areas, confined or poorly ventilated areas. Keep upwind of spill. Ensure adequate ventilation. No smoking in area. Only trained and properly protected personnel must be involved in clean-up operations.

Methods for Containment

If possible, turn leaking containers so that gas escapes rather than liquid. Allow substance to evaporate. Contain spilled materials if possible without risk. Absorb with materials such as Sawdust, dirt, and vermiculite. Collect in suitable and properly labeled open containers. Do not place in sealed containers. Wash what is left of the spill site with large quantities water.

Methods for Cleaning Up

Soak up with inert absorbent material. Sweep up and shovel into suitable containers for disposal. Do not direct water at spill or source of leak.

Other Information

Ventilate the area. Curing foam gives off HFC-134a. Do not put curing foam in a sealed drum.

7. HANDLING AND STORAGE

Handling

Avoid contact with skin, eyes and clothing. Wear personal protective equipment. Remove and wash contaminated clothing before re-use. Do not breathe vapors or spray mist. Do not eat, drink or smoke when using this product. Use only in area provided with appropriate exhaust ventilation. Avoid breathing vapors or mists. Contents under pressure. Do not puncture or incinerate cylinders. Container, even those that have been emptied, can contain vapors. Do not stick pin or any other sharp object into opening on top of cylinder.

Storage

Keep containers tightly closed in a cool, well-ventilated place. Keep in properly labeled containers. Keep in an area equipped with sprinklers. Keep out of the reach of children. Ideal storage temperature is 16-32 °C / 60 – 90 °F. Storage above 32 °C / 90 °F will reduce its shelf-life. Never keep at temperatures above 48.8 °C / 120 °F.

8. EXPOSURE CONTROLS / PERSONAL PROTECTION

Exposure Guidelines

Chemical Name	ACGIH TLV	OSHA PEL	NIOSH IDLH
Methylene bisphenyl isocyanate (MDI)	TWA: 0.005 ppm	Ceiling: 0.02 ppm Ceiling: 0.2 mg/m^3	75 mg/m^3

NIOSH IDLH: Immediately Dangerous to Life or Health

Engineering Measures

Emergency Showers
Eyewash stations
Ventilation systems

Personal Protective Equipment

Eye/Face Protection

Tightly fitting safety glasses with side-shields.

Skin and Body protection

Lightweight protective clothing. Impervious gloves.

Respiratory Protection

Atmospheric levels of PMDI should be maintained below the exposure guidelines. If exposure limits are exceeded or irritation is experienced, use a NIOSH/MSHA approved air-purifying respirator equipped with an organic vapor absorbent and a particle filter. For situations where the atmospheric levels exceed the level for which an air-purifying respirator is effective, use a positive-pressure air-supplied respirator. Respiratory protection must be provided in accordance with current local regulations.

Hygiene Measures When using, do not eat, drink or smoke. Maintain regular cleaning of equipment, work area and clothing.

9. PHYSICAL AND CHEMICAL PROPERTIES

Appearance	Pale Amber	**Odor**	Faint hydrocarbon
Odor Threshold	No information available	**Physical State**	Liquid Aerosol
pH	No information available		
Flash Point	None	**Autoignition Temperature**	Not applicable
Decomposition temperature	No data available	**Boiling Point/Range**	-26°C / -15°F for HFC-134a
Melting Point/Range	No data available		
Flammability Limits in Air	No data available	**Explosion Limits**	No data available
Specific Gravity	1.2	**Water Solubility**	Not Compatible
Solubility	Compatible.	**Evaporation Rate**	No data available
Vapor Pressure	No data available	**Vapor Density**	No data available
		EPA VOC (g/l)	0
Partition Coefficient (n-octanol/water)	No data available		

10. STABILITY AND REACTIVITY

Stability Stable under recommended storage conditions

Conditions to Avoid Keep away from open flames, hot surfaces and sources of ignition. Temperatures above 48.8 °C / 120 °F.

Incompatible Products Water. Alcohols. Strong bases. Strong oxidizing agents. Finely powdered metals.

Hazardous Decomposition Products Carbon monoxide (CO), Carbon dioxide (CO_2), Nitrogen oxides (NOx), Hydrogen cyanide.

Hazardous Polymerization Hazardous polymerization does not occur.

11. TOXICOLOGICAL INFORMATION

Acute Toxicity

Sensitization - Skin Skin contact may cause an allergic skin reaction. Animal studies have shown that skin contact with isocyanates may play a role in respiratory sensitization.

11. TOXICOLOGICAL INFORMATION

Sensitization – Respiratory May cause allergic respiratory response. MDI concentrations below the exposure guidelines may cause allergic respiratory reactions in individuals already sensitized. Asthma-like symptoms may include coughing, difficult breathing and a feeling of tightness in the chest. Occasionally, breathing difficulties may be life threatening.

Product Information .

Chemical Name	LD50 Oral	LD50 Dermal	LC50 Inhalation
Polymethylene polyphenylene isocyanate	49 g/kg (Rat)	9400 mg/kg (Rabbit)	490 mg/m^3 (Rat) 4 h
Methylene bisphenyl isocyanate (MDI)	9200 mg/kg (Rat)		
Methylenediphenyl diisocyanate		6200 mg/kg (Rabbit)	0.369 mg/L (Rat) 4 h

Chronic Toxicity

Chronic Toxicity Repeated or prolonged exposure may cause central nervous system damage. Tissue injury in the upper respiratory tract and lungs has been observed in laboratory animals after repeated excessive exposures to MDI/polymeric MDI aerosols. Repeated or prolonged contact causes sensitization, asthma and eczemas. Repeated or prolonged contact may causes sensitization, asthma and eczemas.

Carcinogenicity There are no known carcinogenic chemicals in this product.

Mutagenicity Contains no known mutagenetic chemicals

Reproductive Toxicity This product does not contain any known or suspected reproductive hazards

Target Organ Effects Contains component(s) that have been reported to cause effects on the following organs in animals: Kidney, Liver, Bone marrow.

Endocrine Disruptor Information This product does not contain any known or suspected endocrine disruptors

12. ECOLOGICAL INFORMATION

Ecotoxicity
Ecotoxicity effects.

Chemical Name	Toxicity to Algae	Toxicity to Fish	Microtox	Daphnia Magna (Water Flea)
Methylenediphenyl diisocyanate	EC50 = 3230 mg/L 96 h			EC50 > 1000 mg/L 24 h

Chemical Name	Log Pow
1,1,1,2,-Tetrafluoroethane HFC-134a	1.06

13. DISPOSAL CONSIDERATIONS

Waste Disposal Method This material, as supplied, is not a hazardous waste according to Federal regulations (40 CFR 261). Should not be released into the environment. Dispose of in accordance with local regulations. Allow foam to cure before disposal.

Contaminated Packaging Dispose of in accordance with local regulations.

14. TRANSPORT INFORMATION

DOT

UN-No	UN1956
Proper Shipping Name	Compressed gas, n.o.s. (Fluorinated Hydrocarbon, Nitrogen)
Hazard Class	2.2
Description	Nonflammable gas (Fluorinated Hydrocarbon, Nitrogen)

TDG

UN-No	UN1956
Proper Shipping Name	Compressed gas, n.o.s. (Fluorinated Hydrocarbon, Nitrogen)
Hazard Class	2.2
Description	Nonflammable gas (Fluorinated Hydrocarbon, Nitrogen)

MEX

UN-No	UN1956
Proper Shipping Name	Compressed gas, n.o.s. (Fluorinated Hydrocarbon, Nitrogen)
Hazard Class	2.2
Description	Nonflammable gas (Fluorinated Hydrocarbon, Nitrogen)

ICAO

UN-No	UN1956
Proper Shipping Name	Compressed gas, n.o.s. (Fluorinated Hydrocarbon, Nitrogen)
Hazard Class	2.2
Description	Nonflammable gas (Fluorinated Hydrocarbon, Nitrogen)

IATA

UN-No	UN1956
Proper Shipping Name	Compressed gas, n.o.s. (Fluorinated Hydrocarbon, Nitrogen)
Hazard Class	2.2
ERG Code	2L
Description	Nonflammable gas (Fluorinated Hydrocarbon, Nitrogen)

IMDG/IMO

UN-No	UN1956
Proper Shipping Name	Compressed gas, n.o.s. (Fluorinated Hydrocarbon, Nitrogen)
Hazard Class	2.2
Description	Nonflammable gas (Fluorinated Hydrocarbon, Nitrogen)

RID

UN-No	UN1956
Proper Shipping Name	Compressed gas, n.o.s. (Fluorinated Hydrocarbon, Nitrogen)
Hazard Class	2
Classification Code	5A
Description	Nonflammable gas (Fluorinated Hydrocarbon, Nitrogen)
ADR/RID-Labels	2

ADR

UN-No	UN1956
Proper Shipping Name	Compressed gas, n.o.s. (Fluorinated Hydrocarbon, Nitrogen)
Hazard Class	2
Classification Code	5A
ADR/RID-Labels	2

ADN

UN-No	UN1956
Proper Shipping Name	Compressed gas, n.o.s. (Fluorinated Hydrocarbon, Nitrogen)
Hazard Class	2
Classification Code	5A
Special Provisions	63, 190, 191, 277, 913
Description	Nonflammable gas (Fluorinated Hydrocarbon, Nitrogen)
Hazard Labels	2

15. REGULATORY INFORMATION

International Inventories

TSCA	Complies
DSL	Complies
EINECS/ELINCS	Complies
ENCS	Complies
CHINA	Complies
KECL	Complies
PICCS	Complies
AICS	Complies

U.S. Federal Regulations

SARA 313
Section 313 of Title III of the Superfund Amendments and Reauthorization Act of 1986 (SARA). This product does not contain any chemicals which are subject to the reporting requirements of the Act and Title 40 of the Code of Federal Regulations, Part 372.

Chemical Name	CAS-No	Weight %	SARA 313 - Threshold Values
Polymethylene polyphenylene isocyanate	9016-87-9	10-30	1.0
Methylene bisphenyl isocyanate (MDI)	101-68-8	10-30	1.0
Methylenediphenyl diisocyanate	26447-40-5	1-5	1.0

SARA 311/312 Hazard Categories

Acute Health Hazard	Yes
Chronic Health Hazard	Yes
Fire Hazard	No
Sudden Release of Pressure Hazard	Yes
Reactive Hazard	No

Clean Water Act
This product does not contain any substances regulated as pollutants pursuant to the Clean Water Act (40 CFR 122.21 and 40 CFR 122.42).

CERCLA
This material, as supplied, contains one or more substances regulated as a hazardous substance under the Comprehensive Environmental Response Compensation and Liability Act (CERCLA) (40 CFR 302).

Chemical Name	Hazardous Substances RQs	Extremely Hazardous Substances RQs
Methylene bisphenyl isocyanate (MDI)	5000 lb	

U.S. State Regulations

California Proposition 65
This product does not contain any Proposition 65 chemicals.

U.S. State Right-to-Know Regulations

Chemical Name	Massachusetts	New Jersey	Pennsylvania	Illinois	Rhode Island
Methylene bisphenyl isocyanate (MDI)	X	X	X	X	X
1,1,1,2 – Tetrafluoroethane (HFC-134a, Fluorocarbon)		X	X		X

International Regulations

Mexico - Grade

The exposure limits values for 101-68-8 are listed under two synonyms:
Diphenylmethane diisocyanate - 0.02 ppm TWA; 0.2 mg/m^3 TWA
Methylene bisphenyl isocyanate - 0.005 ppm TWA; 0.051 mg/m^3 TWA

Chemical Name	Carcinogen Status	Exposure Limits
Methylene bisphenyl isocyanate (MDI)		Mexico: TWA= 0.2 mg/m^3 Mexico: TWA= 0.02 ppm
Diphenylmethane diisocyanate		Mexico: TWA= 0.005 ppm Mexico: TWA= 0.051 mg/m^3

Canada

This product has been classified in accordance with the hazard criteria of the Controlled Products Regulations (CPR) and the MSDS contains all the information required by the CPR.

WHMIS Hazard Class
A Compressed gases
D2B Toxic materials



Chemical Name	NPRI
Methylene bisphenyl isocyanate (MDI)	X
Polymethylene polyphenylene isocyanate	X
1,1,1,2- Tetrafluoroethane, HFC-134a	X

Legend
NPRI - National Pollutant Release Inventory
WHMIS – Workplace Hazardous Materials Information System
TSCA – Toxic Substance Control Act
DSL – Domestic Substance List
EINECS – European Inventory of Existing Commercial Chemical Substances
ENCS – Japan, Existing and New Chemical Substances
KECL- Korean Existing Chemical List
PICS – Philippine Inventory of Chemicals and Chemical Substances
AICS – Australian Inventory of Chemical Substances
TDG – Transportation of Dangerous Goods Act
ICAO – International Civil Aviation Organization
IATA – International Maritime Dangerous Goods Code
IMDG – International Maritime Dangerous Goods Code

16. OTHER INFORMATION

Issuing Date 27-Feb-2007

Revision Date 12-Nov-2012

Revision Note Revised format. Revised by Clayton Corporation EHS Department

Disclaimer
The information provided on this MSDS is correct to the best of our knowledge, information and belief at the date of its publication. The information given is designed only as a guide for safe handling, use, processing, storage, transportation, disposal and release and is not to be considered as a warranty or quality specification. The information relates only to the specific material designated and may not be valid for such material used in combination with any other material or in any process, unless specified in the text.

End of MSDS

Material Safety Data Sheet

NFPA	HMIS	PPE	Transport Symbol
			

Issuing Date 27-Feb-2007 **Revision Date 12-Nov-2012** **Revision Number 5**

1. PRODUCT AND COMPANY IDENTIFICATION

Product Name
Component B for:
Touch 'n Seal® Foam kit Class I FR Foam
Touch 'n Seal Refillable Class I FR Foam
Touch 'n Seal CPDS Class I FR Foam
Touch 'n Seal Mine Foam
Touch 'n Seal Rib & Roof Foam Sealant
Touch 'n Seal Foam Kit Low Density

Product ID No: MSDS / B MF-FR

Recommended Use Sealant, Insulation

Supplier Address
Convenience Products, Division of Clayton Corp.
866 Horan Drive
Fenton, MO 63026-2416 USA
TEL: (636) 349-5333

Emergency Telephone Number
Chemtel 1-800-255-3924
(813) 248-0585 outside US

2. HAZARDS IDENTIFICATION

WARNING!

Emergency Overview

Contents under pressure.
May cause drowsiness and dizziness.

Appearance Pale Amber **Physical State** Liquid Aerosol **Odor** Faint hydrocarbon

Potential Health Effects
Principle Routes of Exposure Inhalation, Skin contact, Eye contact.

Acute Toxicity

Eyes May cause slight irritation to eyes. Avoid contact with eyes.

Skin May cause slight skin irritation and/or dermatitis.

Skin Absorption A single prolonged exposure is unlikely to result in the material being absorbed in harmful amounts.

Inhalation Maintain local exhaust ventilation system during use. If large concentrations of vapors build up they could cause upper respiratory tract and lung irritation. Inhalation of vapors in high concentration may cause shortness of breath (lung edema). Avoid breathing vapors or mists.

Ingestion Not an expected route of exposure. No known effect based on information supplied.

Chronic Effects No known effect based on information supplied

Birth / Developmental Effects: No known effect based on information supplied

Aggravated Medical Conditions Central nervous system. Use of alcoholic beverages may enhance toxic effects.

Interactions with Other Chemicals Oxidizing agents. Strong acids. Strong Bases.

3. COMPOSITION/INFORMATION ON INGREDIENTS

Chemical Name	CAS-No	Weight %
1,1,1,2 – Tetrafluoroethane (HFC-134a, Fluorocarbon)	811-97-2	10-30
Proprietary Polyol Blend	Proprietary mixture	60-90

4. FIRST AID MEASURES

General Advice If emergency warrants call 911 or emergency medical service. Show this safety data sheet to the doctor in attendance. Remove and wash soiled clothing before reuse.

Eye Contact Immediately flush with plenty of water. After initial flushing, remove any contact lenses and continue flushing for at least 15 minutes. Keep eye wide open while rinsing. Obtain medical attention, preferably from an ophthalmologist.

Skin Contact Wash off immediately with plenty of water for at least 15 minutes. Remove soiled clothing; wash before reuse.

Inhalation Move victim to fresh air. Apply artificial respiration if victim is not breathing. If breathing is difficult, oxygen should be administered by qualified personnel. Call a physician or transport to a medical facility.

Ingestion Clean mouth with water. Do not induce vomiting unless directed to do so by medical personnel. Drink plenty of water. Never give anything by mouth to an unconscious person.

Notes to Physician Maintain adequate ventilation and oxygenation of the patient. No specific antidote. Treatment of exposure should be directed at the control of symptoms and the clinical condition of the patient.

Protection of First-aiders Ensure that medical personnel are aware of the material(s) involved, and take precautions to protect themselves.

5. FIRE-FIGHTING MEASURES

Flammable Properties Pressurized cylinders exposed to fire can rupture.

Flash Point None

Suitable Extinguishing Media

Isolate fire and deny unnecessary entry. Use an extinguishing agent suitable for type of surrounding fire. Dry chemical, CO_2, water spray, fog or regular foam. Stay upwind. Keep out of low areas where gases fumes can accumulate. Move containers from fire area if you can do it without risk. Damaged cylinders should be handled only by specialists. Do not scatter spilled material with high pressure water streams.

Explosion Data

Sensitivity to mechanical impact None

Sensitivity to static discharge None

Specific Hazards Arising from the Chemical

Ruptured cylinders may rocket.

Protective Equipment and Precautions for Firefighters

As in any fire, wear self-contained breathing apparatus pressure demand, MSHA/NIOSH (approved or equivalent) and full protective gear.

NFPA	**Health Hazard** 1	**Flammability** 1	**Stability** 0	**Physical and Chemical Hazards** -
HMIS	**Health Hazard** 1	**Flammability** 1	**Stability** 0	**Personal Precautions** -B

6. ACCIDENTAL RELEASE MEASURES

Personal Precautions

Do not touch or walk through spilled material. Use appropriate safety equipment. Evacuate area. Keep personnel out of low areas, confined or poorly ventilated areas. Keep upwind of spill. Ensure adequate ventilation. No smoking in area. Only trained and properly protected personnel must be involved in clean-up operations.

Methods for Containment

If possible, turn leaking containers so that gas escapes rather than liquid. Allow substance to evaporate. Contain spilled materials if possible without risk. Absorb with materials such as Sawdust, dirt, and vermiculite. Collect in suitable and properly labeled open containers. Do not place in sealed containers. Wash what is left of the spill site with large quantities water.

Methods for Cleaning Up

Soak up with inert absorbent material (sand, silica sawdust). Sweep up and shovel into suitable containers for disposal. Do not direct water at spill or source of leak.

Other Information

Ventilate the area. Curing foam gives off HFC-134a. Do not put curing foam in a sealed drum.

7. HANDLING AND STORAGE

Handling

Avoid contact with skin, eyes and clothing. Wear personal protective equipment. Remove and wash soiled clothing before re-use. Do not breathe vapors or spray mist. Do not eat, drink or smoke when using this product. Use only in area provided with appropriate exhaust ventilation. Contents under pressure. Do not puncture or incinerate cylinders. Container, even those that have been emptied, can contain vapors. Do not stick pin or any other sharp object into opening on top of cylinder.

Storage

Keep containers tightly closed in a cool, well-ventilated place. Keep in properly labeled containers. Keep in an area equipped with sprinklers. Keep out of the reach of children. Ideal storage temperature is 16-32 °C / 60 – 90 °F. Storage above 32 °C / 90 °F will reduce its shelf-life. Never keep at temperatures above 48.8 °C / 120 °F. Protect the container from physical abuse.

8. EXPOSURE CONTROLS / PERSONAL PROTECTION

Exposure Guidelines

Chemical Name	ACGIH TLV	OSHA PEL	NIOSH IDLH
1,1,1,2 – Tetrafluoroethane (HFC-134a, Fluorocarbon)	None-established	None-established	None-established

NIOSH IDLH: Immediately Dangerous to Life or Health

Engineering Measures

Showers
Eyewash stations
Ventilation systems

Personal Protective Equipment

Eye/Face Protection

Tightly fitting safety glasses with side-shields.

Skin and Body protection

Lightweight protective clothing. Impervious gloves.

Respiratory Protection

Handle in accordance with good industrial hygiene and safety practice.

Hygiene Measures

When using, do not eat, drink or smoke. Maintain regular cleaning of equipment, work area and clothing.

9. PHYSICAL AND CHEMICAL PROPERTIES

Appearance	Pale Amber	**Odor**	Faint hydrocarbon
Odor Threshold	No information available	**Physical State**	Liquid Aerosol
pH	No information available		
Flash Point	None	**Autoignition Temperature**	Not applicable
Decomposition temperature	No data available	**Boiling Point/Range**	-26°C / -15°F for HFC-134a
Melting Point/Range	No data available		
Flammability Limits in Air	No data available	**Explosion Limits**	No data available
Specific Gravity	1.2	**Water Solubility**	Not Compatible
Solubility	Compatible.	**Evaporation Rate**	No data available
Vapor Pressure	No data available	**Vapor Density**	No data available
		EPA VOC (g/l)	0
Partition Coefficient (n-octanol/water)	No data available		

10. STABILITY AND REACTIVITY

Stability	Stable under recommended storage conditions
Conditions to Avoid	Keep away from open flames, hot surfaces and sources of ignition. Temperatures above 48.8 °C / 120 °F.
Incompatible Products	Water. Alcohols. Strong bases. Strong oxidizing agents. Finely powdered metals.
Hazardous Decomposition Products	Thermal Decomposition can lead to release of irritating gases and vapors. Carbon monoxide (CO), Carbon dioxide (CO_2), Nitrogen oxides (NOx), Hydrogen cyanide.
Hazardous Polymerization	Hazardous polymerization does not occur.

11. TOXICOLOGICAL INFORMATION

Acute Toxicity

Sensitization - Skin No acute toxicity information is available for this product

Sensitization – Respiratory No acute toxicity information is available for this product

Product Information

Chemical Name	LD50 Oral	LD50 Dermal	LC50 Inhalation

Chemical Name	LD50 Oral	LD50 Dermal	LC50 Inhalation
1,1,1,2 – Tetrafluoroethane (HFC-134a, Fluorocarbon)	Non-established	Non-established	Non-established

Chronic Toxicity

Chronic Toxicity No Chronic toxicity information is available for this product

Carcinogenicity There are no known carcinogenic chemicals in this product.

Mutagenicity Contains one or more known mutagenetic chemicals

Target Organ Effects Contains component(s) that have been reported to cause effects on the following organs in animals: (CNS) Kidney, Liver.

Endocrine Disruptor Information This product does not contain any known or suspected endocrine disruptors

12. ECOLOGICAL INFORMATION

Ecotoxicity
Ecotoxicity effects.

Chemical Name	Toxicity to Algae	Toxicity to Fish	Microtox	Daphnia Magna (Water Flea)
1,1,1,2 – Tetrafluoroethane (HFC-134a, Fluorocarbon)	None-established			None-established

Chemical Name	Log Pow
1,1,1,2,-Tetrafluoroethane HFC-134a	1.06

13. DISPOSAL CONSIDERATIONS

Waste Disposal Method This material, as supplied, is not a hazardous waste according to Federal regulations (40 CFR 261). Should not be released into the environment. Dispose of in accordance with local regulations.

Contaminated Packaging Dispose of in accordance with local regulations.

14. TRANSPORT INFORMATION

DOT

UN-No UN1956
Proper Shipping Name Compressed gas, n.o.s. (Fluorinated Hydrocarbon, Nitrogen)
Hazard Class 2.2
Description Nonflammable gas (Fluorinated Hydrocarbon, Nitrogen)

TDG

UN-No UN1956
Proper Shipping Name Compressed gas, n.o.s. (Fluorinated Hydrocarbon, Nitrogen)
Hazard Class 2.2
Description Nonflammable gas (Fluorinated Hydrocarbon, Nitrogen)

MEX

UN-No UN1956
Proper Shipping Name Compressed gas, n.o.s. (Fluorinated Hydrocarbon, Nitrogen)
Hazard Class 2.2
Description Nonflammable gas (Fluorinated Hydrocarbon, Nitrogen)

14. TRANSPORT INFORMATION

ICAO

UN-No	UN1956
Proper Shipping Name	Compressed gas, n.o.s. (Fluorinated Hydrocarbon, Nitrogen)
Hazard Class	2.2
Description	Nonflammable gas (Fluorinated Hydrocarbon, Nitrogen)

IATA

UN-No	UN1956
Proper Shipping Name	Compressed gas, n.o.s. (Fluorinated Hydrocarbon, Nitrogen)
Hazard Class	2.2
ERG Code	2L
Description	Nonflammable gas (Fluorinated Hydrocarbon, Nitrogen)

IMDG/IMO

UN-No	UN1956
Proper Shipping Name	Compressed gas, n.o.s. (Fluorinated Hydrocarbon, Nitrogen)
Hazard Class	2.2
Description	Nonflammable gas (Fluorinated Hydrocarbon, Nitrogen)

RID

UN-No	UN1956
Proper Shipping Name	Compressed gas, n.o.s. (Fluorinated Hydrocarbon, Nitrogen)
Hazard Class	2
Classification Code	5A
Description	Nonflammable gas (Fluorinated Hydrocarbon, Nitrogen)
ADR/RID-Labels	2

ADR

UN-No	UN1956
Proper Shipping Name	Compressed gas, n.o.s. (Fluorinated Hydrocarbon, Nitrogen)
Hazard Class	2
Classification Code	5A
ADR/RID-Labels	2

ADN

UN-No	UN1956
Proper Shipping Name	Compressed gas, n.o.s. (Fluorinated Hydrocarbon, Nitrogen)
Hazard Class	2
Classification Code	5A
Special Provisions	63, 190, 191, 277, 913
Description	Nonflammable gas (Fluorinated Hydrocarbon, Nitrogen)
Hazard Labels	2

15. REGULATORY INFORMATION

International Inventories

TSCA	Complies
DSL	Complies
EINECS/ELINCS	Complies
ENCS	One or more components not listed on inventory.
CHINA	Complies
KECL	Complies
PICCS (PH)	One or more components not listed on inventory.
AICS	One or more components not listed on inventory.
IECS	One or more components not listed on inventory.
NZ CLSC	One or more components not listed on inventory.

U.S. Federal Regulations

SARA 313
Section 313 of Title III of the Superfund Amendments and Reauthorization Act of 1986 (SARA). This product does not contain any chemicals which are subject to the reporting requirements of the Act and Title 40 of the Code of Federal Regulations, Part 372.

Chemical Name	CAS-No	Weight %	SARA 313 - Threshold Values
1,1,1,2 – Tetrafluoroethane (HFC-134a, Fluorocarbon)	811-97-2	10-30	1.0

SARA 311/312 Hazard Categories

Acute Health Hazard	Yes
Chronic Health Hazard	No
Fire Hazard	No
Sudden Release of Pressure Hazard	Yes
Reactive Hazard	No

Clean Water Act
This product does not contain any substances regulated as pollutants pursuant to the Clean Water Act (40 CFR 122.21 and 40 CFR 122.42).

CERCLA
This material, as supplied, does not contain a substances regulated as a hazardous substance under the Comprehensive Environmental Response Compensation and Liability Act (CERCLA) (40 CFR 302).

Chemical Name	Hazardous Substances RQs	Extremely Hazardous Substances RQs

U.S. State Regulations

California Proposition 65
This product does not contain any proposition 65 chemicals.

U.S. State Right-to-Know Regulations

Chemical Name	Massachusetts	New Jersey	Pennsylvania	Illinois	Rhode Island
1,1,1,2 – Tetrafluoroethane (HFC-134a, Fluorocarbon)		X	X		X

International Regulations

Canada

This product has been classified in accordance with the hazard criteria of the Controlled Products Regulations (CPR) and the MSDS contains all the information required by the CPR.

WHMIS Hazard Class
A Compressed gases



Chemical Name	NPRI
1,1,1,2- Tetrafluoroethane, HFC-134a	X

Legend
NPRI - National Pollutant Release Inventory
WHMIS – Workplace Hazardous Materials Information System
TSCA – Toxic Substance Control Act
DSL – Domestic Substance List
EINECS – European Inventory of Existing Commercial Chemical Substances
ENCS – Japan, Existing and New Chemical Substances
KECL- Korean Existing Chemical List
PICS – Philippine Inventory of Chemicals and Chemical Substances
AICS – Australian Inventory of Chemical Substances
TDG – Transportation of Dangerous Goods Act
ICAO – International Civil Aviation Organization
IATA – International Maritime Dangerous Goods Code
IMDG – International Maritime Dangerous Goods Code
IECS - Inventory of Existing Chemical Substances (China)
NZ CLSC – New Zealand Interim Inventory of Chemicals.

16. OTHER INFORMATION

Issuing Date 27-Feb-2007

Revision Date 12-Nov-2012

Revision Note Revised format. Revised by Clayton Corporation EHS Department

Disclaimer

The information provided on this MSDS is correct to the best of our knowledge, information and belief at the date of its publication. The information given is designed only as a guide for safe handling, use, processing, storage, transportation, disposal and release and is not to be considered as a warranty or quality specification. The information relates only to the specific material designated and may not be valid for such material used in combination with any other material or in any process, unless specified in the text.

End of MSDS

Rhino Series

COMMERCIAL ALUMINUM WINDOWS

HOPPER | CW-60/CW-55

5200 SERIES



Gerkin™

WINDOWS & DOORS



Gerkin™
WINDOWS & DOORS

Quality since 1932

Our primary focus has been to manufacture energy saving window and door products. Throughout our history we have established ourselves as an innovator in the design and manufacturing capability of insulated windows and doors.

Stringent product testing and innovative design has allowed our products to evolve as market and consumer needs change. In the winter of 1989-90 we started to conceptualize and design our Rhino Commercial Aluminum window and door series. Today we have several commercial window styles in the Rhino line. This window and door series consists of a commercial horizontal slider, casement, single hung, double hung, hopper, awning, fixed and patio door. Each Rhino window reflects the design and manufacturing expertise we've implemented over the years. We also publish our AAMA test results to back up our claims of product performance and quality.

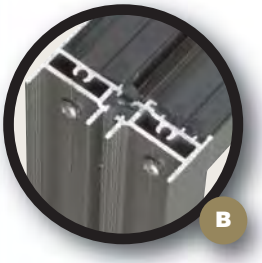









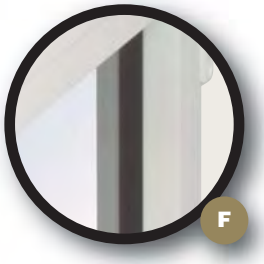

CW-PG60/CW-PG55 FEATURES

- **A** AAMA CW-PG60-AP/CW-PG55-AP rated hopper window
- **B** 2 3/8" thermally broken frame depth: Gerkin uses thermally broken frame and sash for improved thermal efficiency.
- **C** Reinforced power crimped sash corners: All sash corners are reinforced with two engineered corner keys which are hydraulically crimped, creating a corner built to last for years of trouble free operation.
- **D** Sash overlaps frame: Gerkin provides two compression seals on every sash and then overlaps the frame of the window with one of the seals. This design allows Gerkin to have one of the tightest windows available.
- **E** Cam action locks with 4-bar friction hinge: Gerkin uses cam locks to compress the weather seals in the tightest manner possible. These locks also include a pole ring, which will allow for operating the window at higher elevations. Four bar friction hinges will provide easy operation and tension adjustments.
- **F** Insulated Glass: Overall glass thickness options are 5/8" or 1". Gerkin offers several stocked glass options as well as numerous special order options.
- Extruded screen frames: Gerkin uses extrusions on all Rhino screen frames instead of lightweight roll form aluminum. Extruded screens are much more durable and save money in replacement costs.
- Rhino Accessory Options: Gerkin offers complete subframe and panning systems, nail fins, snap trims, sill-flashing strap anchors, stacking frames, structural mullions, mullion covers and factory applied extension jambs.
- Other options: Gerkin offers a louver system with a blank-off panel for PTAC units. Hoppers are available in vertical or horizontal multi-window common frame configurations.

Rhino Series

COMMERCIAL ALUMINUM WINDOWS

HOPPER | CW-60/CW-55

5200 SERIES

CW-PG60/CW-PG55 HORIZONTAL & VERTICAL DETAILS

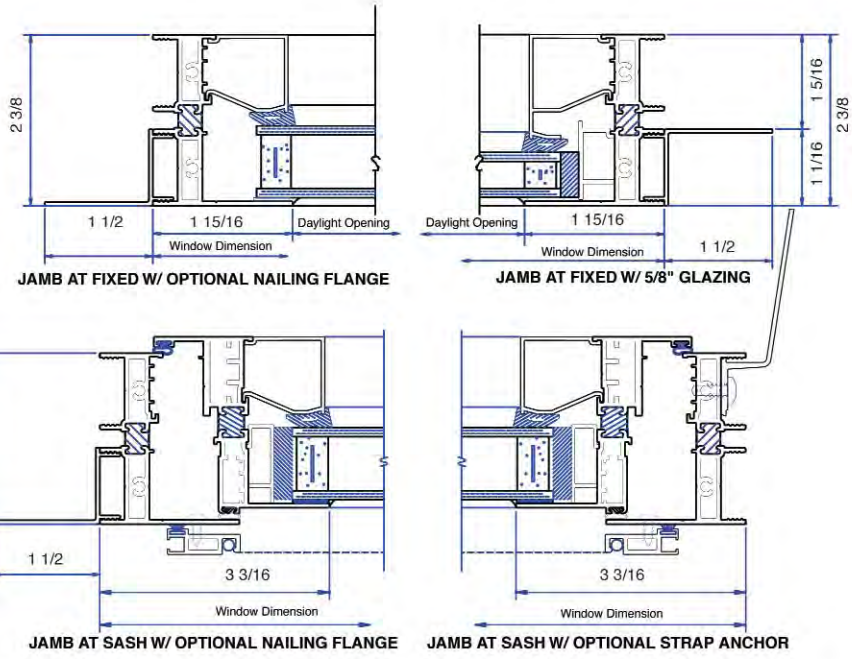

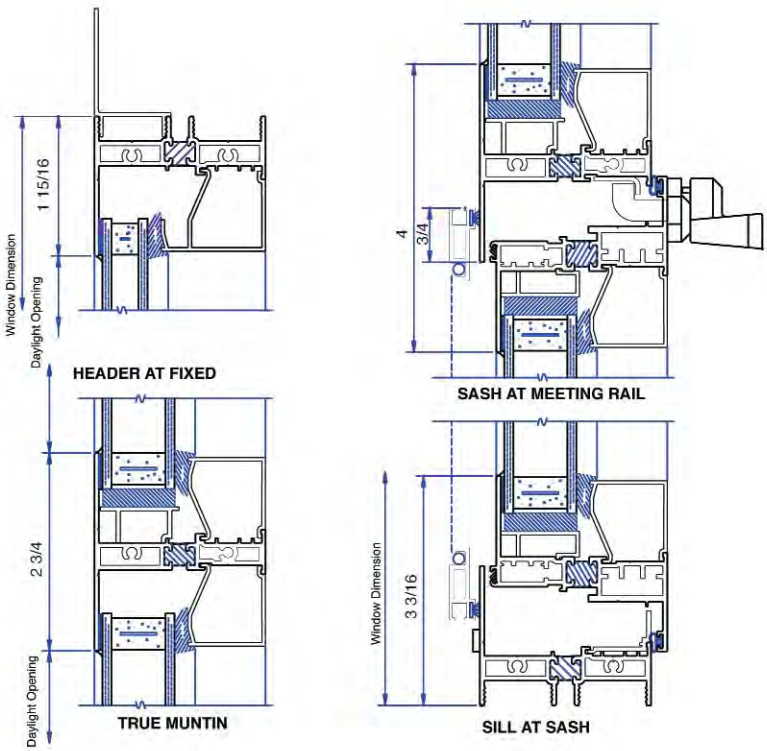

COLORS

Four standard colors: Gerkin stocks organic painted finishes in white and bronze as well as anodic finishes of clear anodized and dark bronze anodized. Custom paint and anodized finishes are available.

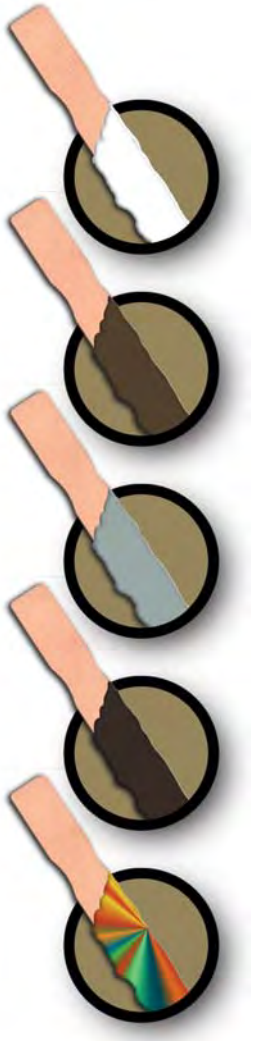

ONLINE INFORMATION

Our website at www.gerkin.com offers AutoCAD details of window drawings and written specifications for architectural use. The Gerkin estimating department offers quoting and shop drawing services. Distributor catalogs are also available for over the counter quoting and architectural detail referral.

AAMA®

Rhino Series
COMMERCIAL ALUMINUM WINDOWS

HOPPER | CW-60/CW-55

5200 SERIES

AAMA TEST RESULTS

MODEL	CLASS	TEST SIZE	AIR INFILTRATION (cfm/sq.ft.)	WATER (psf)	SWL[1] (psf)	U-VALUE w/LoE[3]/Argon	SHGC[2]	VT[3]	CONDENSATION RESISTANCE	SOUND TRANSMISSION CLASS
5200	CW-PG60 -AP	49"X72" Vert. 2-Lite	.01	9.00	90.0	.48	.20	.42	39	STC 36 OITC 28 w/ 1/4 Lam X 1/8 A
5200	CW-PG55 -AP	61"X68" Vert. 2-Lite	.01	8.25	82.5	.48	.20	.42	39	STC 36 OITC 28 w/ 1/4 Lam X 1/8 A



[1]Structural Wind Load • [2]Solar Heat Gain Coefficient • [3]Visible Transmittance
TESTED AND CERTIFIED TO AAMA/WDMA/CSA 101/I.S.2/A440-08
*U Values and CRF Values, tested with 1" insulating glass w/LoE
U-VALUE/SHGC/VT/CRF TESTED TO NFRC 100/200/500

STANDARD HOPPER OPTIONS

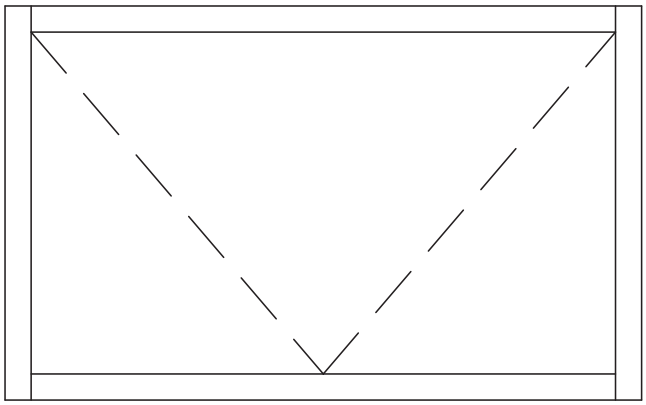



All Gerkin Rhino Products offer a comprehensive Limited Warranty. For detailed warranty information, visit www.gerkin.com

Gerkin™ WINDOWS & DOORS

P.O. BOX 3203
SIOUX CITY, IA 51102
PHONE: 402.494.6000
FAX: 402.494.6765
TOLL FREE: 800.475.5061

NFRC National Fenestration Rating Council | AAMA | Energy ENERGY STAR PARTNER

Super Spacer®

Rhino Series

COMMERCIAL ALUMINUM WINDOWS

HORIZONTAL SLIDERS | LC-45/50

5045 SERIES





Gerkin™

WINDOWS & DOORS



Gerkin™
WINDOWS & DOORS

Quality since 1932

Our primary focus has been to manufacture energy saving window and door products. Throughout our history we have established ourselves as an innovator in the design and manufacturing capability of insulated windows and doors.

Stringent product testing and innovative design has allowed our products to evolve as market and consumer needs change. In the winter of 1989-90 we started to conceptualize and design our Rhino Commercial Aluminum window and door series. Today we have several commercial window styles in the Rhino line. This window and door series consists of a commercial horizontal slider, casement, single hung, double hung, hopper, awning, fixed and patio door. Each Rhino window reflects the design and manufacturing expertise we've implemented over the years. We also publish our AAMA test results to back up our claims of product performance and quality.

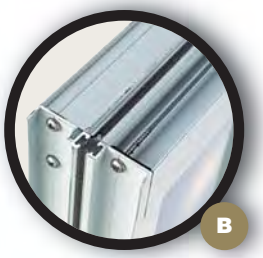





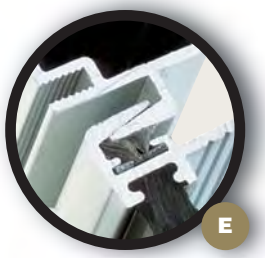

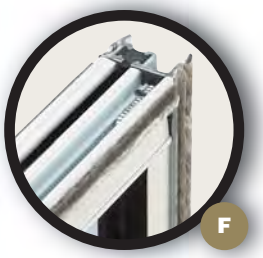







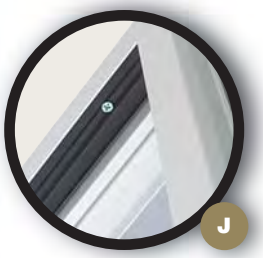





Rhino Series

COMMERCIAL ALUMINUM WINDOWS

HORIZONTAL SLIDERS | LC-45/50

LC-45/LC-50 FEATURES

A AAMA LC-PG45-HS rated slider window (120" x 64" 3-lite slider tested).

AAMA LC-PG50 108" x 60" XOX

B 2 3/8" thermally broken frame depth: Gerkin offers thermal breaks in the frame and sash for improved thermal efficiency.

C Polyethylene foam seal pads at all sash and frame corners: Gerkin ensures a tight fit at all corners by using these seals to seal out light, air and water.

D Integral nail fin: Nail fins are a standard feature for this window. The corners are closed which allows for full perimeter flashing. As an option, Gerkin will remove the nail fin for masonry and subframe installations.

E Jamb and Mullion Interlocks: The use of two interlocks helps to reduce deflection and creates a snug fit due to reduced movement away from the weather seals. The structure of the window is enhanced and air infiltration is reduced.

F Dual Weatherstripping: This window features heavy wool pile weatherstripping with a Mylar fin on both sides of the sash. This means that whether there are negative or positive pressures on the window, there will never be a disconnection of weatherstrip, thus giving Gerkin one of the tightest sliders on the market.

G Adjustable zinc chromate carbon steel ball bearing rollers: These rollers are designed to last for years with trouble free operation. Our sliders are among one of the easiest windows to operate with a maximum operating force of 18 pounds on the largest window we make. The rollers also offer a secondary height adjustment to help with sightline adjustments after installation.

H Ridged non-weatherable PVC sill track: With the deeper sill track on this slider, Gerkin has incorporated a secondary sill, which the sash rolls on. This PVC product is quiet, doesn't scratch and has a weep system that removes water from the operating area of the sash.

I Self-latching deadbolt lock: This level 10 forced entry rated deadbolt offers automatic locking when the window is closed. This is a great security feature.

J Anti- lift stop: Gerkin installs a security feature that won't allow the sash to be lifted out of the lock while the deadbolt is in the locked position. The window must be fully open prior to being able to remove the sash.

K Weeps with baffles: Gerkin includes an open cell foam inside each weep hole, which restricts snow, dirt, insects and other debris from entering the window through the weeps.

L Standard options: Gerkin offers complete subframe and panning systems, snap trims, sill flashing, stacking frames, stacking "H" channel, structural mulls, mull covers and factory applied extension jambs.

5/8" OA double strength glass: Gerkin insulates it's own glass and offers a ten year seal warranty as well as a one year stress crack warranty. With the use of the Super Spacer® warm edge spacer system, Gerkin insures a long seal life and thermal efficient glass. Standard glass options are LoE³, Double LoE, bronze and gray tint, obscure and tempered. Internal glass grills are also a standard option. Custom glass options are available. (Twenty year seal warranty for residential use)

Extruded aluminum screen frames: The strength of extruded screen frames is a major maintenance cost advantage for Gerkin over easily damaged roll form screens.

Other options: Gerkin offers insulated panels as well as a louver system with insulated or non-insulated blank-off panel for PTAC units. This unit can be incorporated into our Rhino window system and used in conjunction with any Rhino window.

ONLINE INFORMATION

Our website at www.gerkin.com offers AutoCAD details of window drawings and written specifications for architectural use. The Gerkin estimating department offers quoting and shop drawing services. Distributor catalogs are also available for over the counter quoting and architectural detail referral.

AAMA®

COLORS

Four standard colors: Gerkin stocks organic painted finishes in white and bronze as well as anodic finishes of clear anodized and dark bronze anodized. Custom paint and anodized finishes are available.

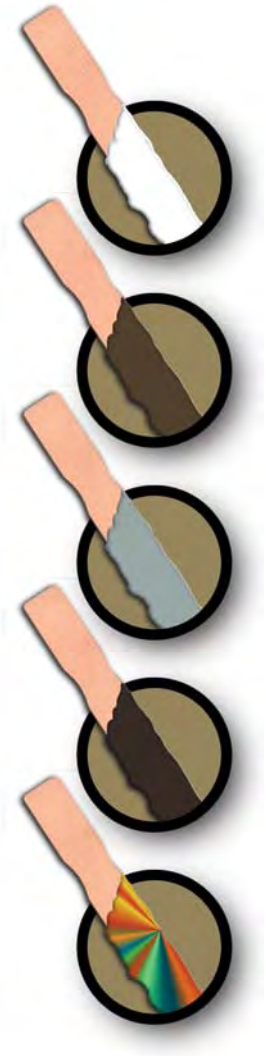

5045 SERIES

LC-45/LC-50 HORIZONTAL & VERTICAL DETAILS

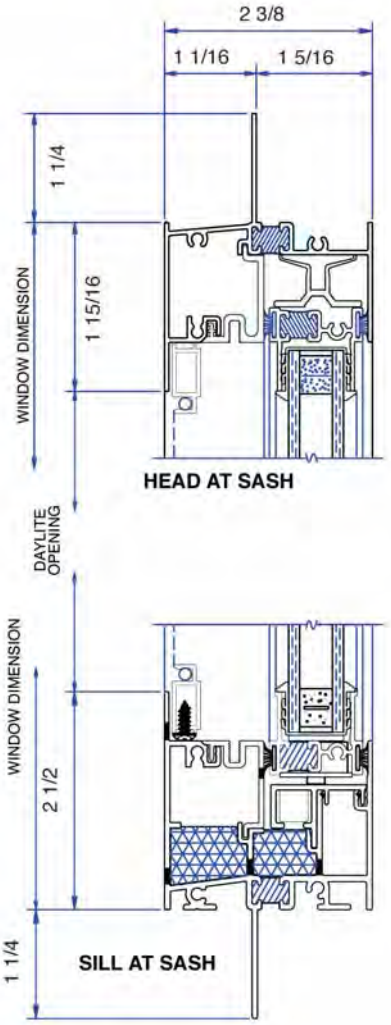



LC-45

Top sliders shown with extended leg arch above and PTAC unit below. Other sliders shown with PTAC units below.

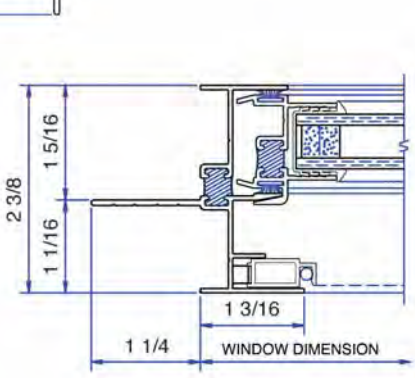

OPERATOR JAMB

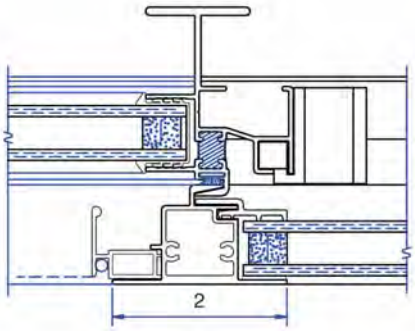

MEETING RAIL

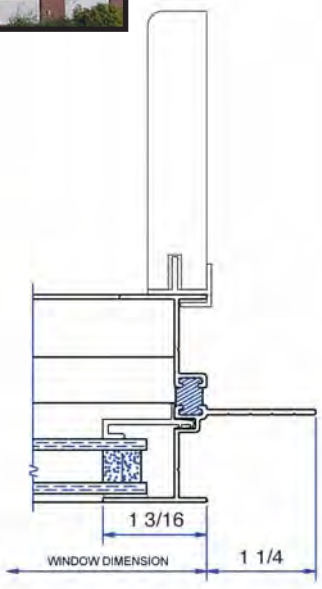

FIXED JAMB w/ EXTENSION JAMB

Rhino Series

COMMERCIAL ALUMINUM WINDOWS

HORIZONTAL SLIDERS | LC-45/50

5045 SERIES

AAMA TEST RESULTS

MODEL	CLASS	TEST SIZE	AIR INFILTRATION (cfm/sq.ft.)	WATER (psf)	SWL[1] (psf)	U-VALUE w/LoE[3]/Argon	SHGC[2]	VT[3]	CONDENSATION RESISTANCE	SOUND TRANSMISSION CLASS
5045	LC-PG45 -HS	120"X64" (XOX)	0.04	6.90	67.5	.38	.24	.55	42	STC 31 OITC 28 w/ 1/4 Lam X 1/8 A
5045	LC-PG50	108"X60" (XOX)	0.06	7.50	75.0	.38	.24	.55	42	STC 31 OITC 28 w/ 1/4 Lam X 1/8 A

[1]Structural Wind Load • [2]Solar Heat Gain Coefficient • [3]Visible Transmittance
TESTED AND CERTIFIED TO AAMA/WDMA/CSA 101/I.S.2/A440-08
U-VALUE/SHGC/VT/CRF TESTED TO NFRC 100/200/500
THERMAL VALUES ARE FOR 5/8" IGU w/1/8" 366/ARGON/1/8" CLEAR - NO MUNTINS



All Gerkin Rhino Products offer a comprehensive Limited Warranty. For detailed warranty information, visit www.gerkin.com

STANDARD SLIDER OPTIONS

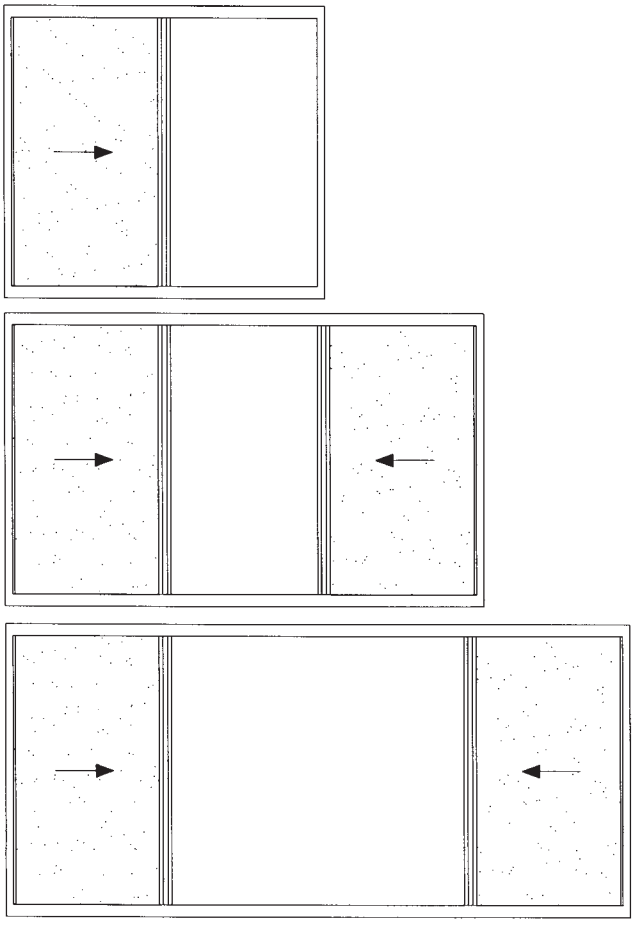

Rhino Series

COMMERCIAL ALUMINUM WINDOWS

HORIZONTAL SLIDERS | LC-45/50

5045 SERIES

Gerkin™
WINDOWS & DOORS

P.O. BOX 3203
SIOUX CITY, IA 51102
PHONE: 402.494.6000
FAX: 402.494.6765
TOLL FREE: 800.475.5061

NFRC National Fenestration Rating Council®

AAMA

ENERGY STAR PARTNER

Super Spacer®

THERMOLITE™

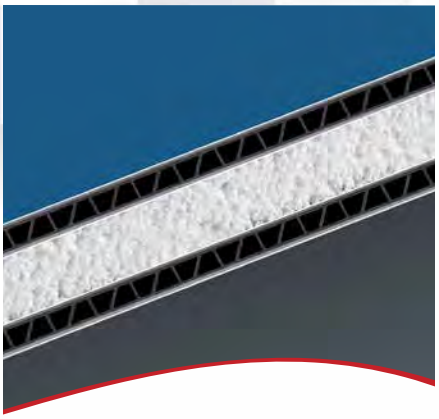

Panels are water-resistant, featuring an insulating core of Polypropolyene (ISO) or Expanded Polystyrene (EPS) foam. Corrugated polypropolyene stabilizers are designed for optimal strength with minimal weight. Prefinished aluminum panels can be ordered in a smooth or stucco-embossed finish in 3/4 in. to 3-1/2 in. overall thickness.

Energy-saving insulating properties and a great look rolled into one—that's the magic of our Thermolite panels used for exterior wall applications.

- Constructed of an insulating foam core sandwiched between two corrugated polypropolyene stabilizers and finished aluminum sheets
- Water-resistant, virtually maintenance-free for up to 20 years
- Available in smooth or stucco-embossed finishes
- Fits into standard 1 in. insulating glass and glazing pockets and storefront extrusions
- Panels can be fabricated on-site using standard carpentry tools or factory-cut to meet your exact specifications

Typical Applications

- Curtain Walls
- Storefronts
- Spandrels
- Partitions
- Schools
- Opaque Glazing
- In-Fill Panels
- Soffits
- Sunrooms

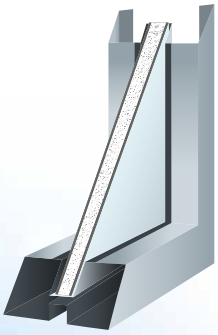



THERMOLITE™ TECHNICAL DATA

Construction of Thermolite Panels

Sizes*	Core	Backer	Face	Surface Face Finish	Colors
4 ft. x 8 ft. 4 ft. x 10 ft. 4 ft. x 12 ft.	Stabilizers: Corrugated Polypropolyene Insulating Core: EPS or ISO Foam	Mill finish 0.013 in. aluminum sheet or same surface as face depending on application	0.028 or 0.032 in.	Smooth and/or embossed aluminum	PVDF/Kynar 500®, Designer Series, and custom colors
			0.024 in.	Smooth and/or stucco-embossed aluminum	Standard and Natural Series+
			0.013 in.	Stucco-embossed aluminum only	Standard

**5 ft. widths also available in select colors.* *+Smooth only.* *Refer to Architectural Color Chart for specific size and finish availability.*

Specifications (Based on 1 in. thick panel with 0.032 in. face and 0.013 in. backer.)

Thickness	Width	Length	Weight	Tolerances	Stability	Sound Transmission
Nominal: 1 in. fits 1 in. glass and glazing pockets Actual: 15/16 in. ±1/16 in. thick Thicknesses from 3/4 in. to 3-1/2 in. can be ordered	48 in. or cut-to-size 60 in. in select colors	96 in. 120 in. 144 in. or cut-to-size	1.40 lb./ft.^{2}	Length and Width: ±1/16 in. Squareness: Diagonals equal within 1/8 in. Thickness: ±5/64 in.	Thermal Expansion: 13.1 x 10^{-6} in./in.°F Max. Service Temp. EPS Core: 167°F (long-term) 180°F (intermittent)	EPS Core: STC: 26

Fire Rating (EPS Only): Flame Spread Index = 0, Smoke Developed Index = 100

Bond Test: Based on ASTM D1781

References & Testing

AAMA 2605	Voluntary Specification, Performance Requirements and Test Procedures for Superior Performing Organic Coatings on Aluminum Extrusions and Panels
ASTM B209	Standard Specification for Aluminum and Aluminum-Alloy Sheet and Plate
ASTM C518	Standard Test Method for Steady-State Thermal Transmission Properties by Means of the Heat Flow Meter Apparatus
ASTM D635	Standard Test Method for Rate of Burning and/or Extent and Time of Burning of Plastics in a Horizontal Position
ASTM D1781	Standard Test Method for Climbing Drum Peel for Adhesives
ASTM D1929	Standard Test Method for Determining Ignition Temperature of Plastics
ASTM E8	Standard Test Methods for Tension Testing of Metallic Materials
ASTM E84	Standard Test Method for Surface Burning Characteristics of Building Materials
ASTM E90	Standard Test Method for Laboratory Measurement of Airborne Sound Transmission Loss of Building Partitions and Elements

TREMCO

Dymonic FC

Fast Skinning, Low Modulus Polyurethane Sealant

Product Description:
Dymonic FC is a high performance, low modulus, one-component, moisture curing, polyurethane sealant.

Basic Uses:
Dymonic FC is a durable, flexible polyurethane sealant that offers excellent performance in moving joints. Dymonic FC does not require a primer on most construction materials, and exhibits tenacious adhesion once fully cured. Typical applications for Dymonic FC include: expansion and control joints, precast concrete panel joints, perimeter caulking (windows, door, panels), EIFS, aluminum, masonry & vinyl siding.

Limitations:
Do not apply over damp or contaminated surfaces.

Packaging:
1/12 gallon (300mL) cartridges, 20oz. (600mL) sausages, 3 (11.4 L) and 5-gallon (19 L) pails.

Standard Colors:
Aluminum Stone, Anodized Aluminum, Gray, Limestone, White, Off White, Buff, Precast White, Ivory, Beige, Almond, Hartford Green, Redwood Tan, Stone, Natural Clay, Dark Bronze, Bronze, Light Bronze, Black.

Applicable Standards:
Meets U.S. Federal Specification TT-S-00230C, Class A, Type II; Canadian Standard CAN/CGSB-19.13-M87; and ASTM C920, Type S, Grade NS, Class 100/50, Use NT, M, A and O. AAMA 802.3 Type I and II, and AAMA 808.3.

INSTALLATION

Joint Design:
May be used in any vertical or horizontal joint design in accordance with accepted architectural/engineering practice. Joint width should be 4 times anticipated movement, but not less than 1/4 inch (6.4mm) wide.

Joint Dimensions:
For joints 1/4 inch (6.4mm) to 1/2 inch (12.7mm) wide, the width to depth ratio should be equal. Joints 1/2 inch (12.7mm) wide or greater should have a sealant depth of 1/2 inch (12.7mm). Minimum joint size is 1/4 inch by 1/4 inch (6.4mm by 6.4mm).

Surface Preparation:
For good adhesion, the joint interface must be sound, clean and dry. Depending on the substrate, or presence of form release agents, masonry waterproofing, dust, loose mortar or laitance, architectural paints or finishes, the joint surface may require a thorough wire brushing, grinding, sandblasting, solvent washing and/or primer.

Tooling & Cleaning:
Tooling is recommended immediately after application to insure firm, intimate contact with the joint interface. Dry tooling is preferred, although tooling agents can be utilized. Excess sealant and smears adjacent to the joint can be removed with Xylol or Toluol before sealant cures.

Joint Backing Bond Breaking Tape:
Closed cell polyethylene backer rods are preferred as joint backing to control depth of sealant bead. Where depth of joint will prevent use of joint backing, an adhesive backed polyethylene tape should be installed to prevent three-sided adhesion.

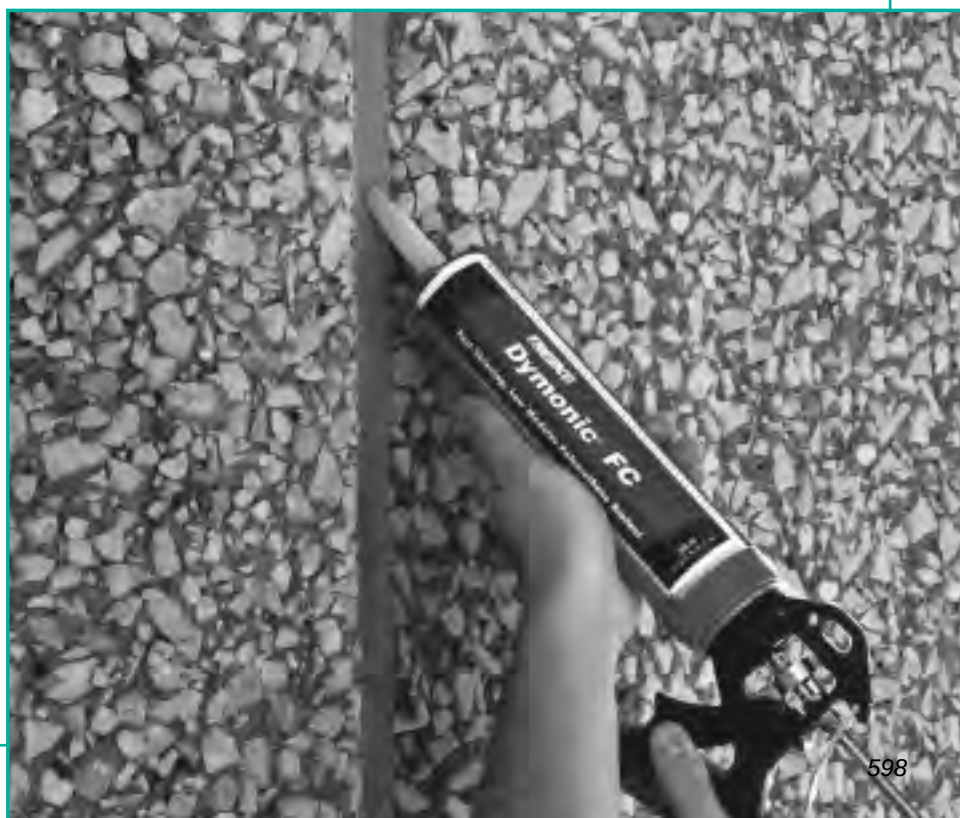

Application:
Cartridges of Dymonic FC are easy to apply with conventional caulking equipment. Fill joint completely with a proper width-to-depth ratio and tool.

Maintenance:
Damaged sealant can be repaired. Consult your Tremco Distributor or Representative for repair procedures.

Availability:
Available from your local Tremco Field Representative, Tremco Distributor or Tremco Warehouse.

Warranty:
Tremco warrants its Sealants to be free of defects in materials, but makes no warranty as to appearance or color. Since methods of application and on-site conditions are beyond our control and can affect performance, Tremco makes no other warranty, expressed or implied, including warranties of MERCHANTABILITY and FITNESS FOR A PARTICULAR PURPOSE, with respect to Tremco Sealants. Tremco's sole obligation shall be, at its option, to replace, or refund the purchase of the quantity of Tremco Sealant proven to be defective and Tremco shall not be liable for any loss or damage.

TYPICAL PHYSICAL PROPERTIES

ASTM C920 TT-S-00230C	Requirement	Dymonic FC Results
Rheological Properties at 40 and 122˚F. (4.4 and 50˚C.)	3/16" (4.8mm) Maximum Flow No Deformation	0 None
Extrusion Rate	45 Seconds Maximum	15
Hardness Properties	25-50	25
Weight Loss	Less than 10%	Passes (<2%)
Skin Time	N/A	30-90 minutes
Tack Free Time	Tack Free 72 Hrs. Max.	3-4 Hours
Stain & Color Change	No Visible Change No Stain	None None
Adhesion-in-Peel	Not less than 5 pli (22N) Less than 25% Bond Loss	Concrete-18-22 pli Aluminum 20-25 pli No Adhesion Loss
Effects of Accelerated Weathering	No cracks greater than #2 on U.V. and Cold Temperature Bond Test	Passes
Movement Capability	N/A	+100%/-50%

For MSDS and Spec Data Sheets visit our website:
www.tremcosealants.com

TREMCO
Sealant/Weatherproofing Division
3735 Green Road • Beachwood, Ohio • 44122 • Phone: (216) 292-5000 • (800) 321-7906
220 Wicksteed Avenue • Toronto, ON M4H 1G7 • Phone: (416) 421-3300 • (800)363-3213

SAFETY DATA SHEET

1. Identification

Material name: DYMONIC FC ALUMINUM STONE
Material: 960851 323

Recommended use and restriction on use

Recommended use: Sealant
Restrictions on use: Not known.

Manufacturer/Importer/Supplier/Distributor Information

Tremco U.S Sealants
3735 Green Road
Cleveland OH 44122
US

Contact person:	EH&S Department
Telephone:	216-292-5000
Emergency telephone number:	1-800-424-9300 (US); 1-613-996-6666 (Canada)

2. Hazard(s) identification

Hazard Classification

Health Hazards

Carcinogenicity	Category 1A
Toxic to reproduction	Category 1B

Unknown toxicity - Health

Acute toxicity, oral	10.19 %
Acute toxicity, dermal	12.47 %
Acute toxicity, inhalation, vapor	99.62 %
Acute toxicity, inhalation, dust or mist	99.94 %

Environmental Hazards

Acute hazards to the aquatic environment	Category 1

Unknown toxicity - Environment

Acute hazards to the aquatic environment	43.22 %
Chronic hazards to the aquatic environment	100 %

Label Elements

Hazard Symbol:



Signal Word: Danger

Hazard Statement:	May cause cancer. May damage fertility or the unborn child. Very toxic to aquatic life.
Precautionary Statement:	
Prevention:	Obtain special instructions before use. Do not handle until all safety precautions have been read and understood. Use personal protective equipment as required. Avoid release to the environment.
Response:	If exposed or concerned: Get medical advice/attention. Collect spillage.
Storage:	Store locked up.
Disposal:	Dispose of contents/container to an appropriate treatment and disposal facility in accordance with applicable laws and regulations, and product characteristics at time of disposal.
Other hazards which do not result in GHS classification:	None.

3. Composition/information on ingredients

Mixtures

Chemical Identity	CAS number	Content in percent (%)*
Calcium carbonate	471-34-1	30 - 60%
Butyl benzyl phthalate	85-68-7	15 - 40%
Calcium Carbonate (Limestone)	1317-65-3	7 - 13%
Calcium oxide	1305-78-8	1 - 5%
Titanium dioxide	13463-67-7	0.5 - 1.5%
Stearic acid	57-11-4	0.5 - 1.5%
Hydrotreated heavy naphthenic distillate	64742-52-5	0.1 - 1%

* All concentrations are percent by weight unless ingredient is a gas. Gas concentrations are in percent by volume.

4. First-aid measures

Ingestion:	Call a POISON CENTER/doctor/.../if you feel unwell. Rinse mouth.
Inhalation:	Move to fresh air.
Skin Contact:	Wash skin thoroughly with soap and water. If skin irritation occurs: Get medical advice/attention.
Eye contact:	Any material that contacts the eye should be washed out immediately with water. If easy to do, remove contact lenses. If eye irritation persists: Get medical advice/attention.

Most important symptoms/effects, acute and delayed

Symptoms:	May cause skin and eye irritation.

Indication of immediate medical attention and special treatment needed

Treatment: Symptoms may be delayed.

5. Fire-fighting measures

General Fire Hazards: No unusual fire or explosion hazards noted.

Suitable (and unsuitable) extinguishing media

Suitable extinguishing media: Use fire-extinguishing media appropriate for surrounding materials.

Unsuitable extinguishing media: Do not use water jet as an extinguisher, as this will spread the fire.

Specific hazards arising from the chemical: During fire, gases hazardous to health may be formed.

Special protective equipment and precautions for firefighters

Special fire fighting procedures: No data available.

Special protective equipment for fire-fighters: Self-contained breathing apparatus and full protective clothing must be worn in case of fire.

6. Accidental release measures

Personal precautions, protective equipment and emergency procedures: No data available.

Methods and material for containment and cleaning up: Collect spillage in containers, seal securely and deliver for disposal according to local regulations.

Notification Procedures: In the event of a spill or accidental release, notify relevant authorities in accordance with all applicable regulations.

Environmental Precautions: Do not contaminate water sources or sewer. Prevent further leakage or spillage if safe to do so. Avoid release to the environment.

7. Handling and storage

Precautions for safe handling: Ventilate well, avoid breathing vapors. Use approved respirator if air contamination is above accepted level. Use mechanical ventilation in case of handling which causes formation of dust. Do not handle until all safety precautions have been read and understood. Obtain special instructions before use. Use personal protective equipment as required.

Conditions for safe storage, including any incompatibilities: Store locked up.

8. Exposure controls/personal protection

Control Parameters

Occupational Exposure Limits

Chemical Identity	type	Exposure Limit Values	Source
Calcium carbonate - Total dust.	PEL	15 mg/m3	US. OSHA Table Z-1 Limits for Air Contaminants (29 CFR 1910.1000) (02 2006)
Calcium carbonate - Respirable fraction.	PEL	5 mg/m3	US. OSHA Table Z-1 Limits for Air Contaminants (29 CFR 1910.1000) (02 2006)
Calcium Carbonate (Limestone) - Total dust.	PEL	15 mg/m3	US. OSHA Table Z-1 Limits for Air Contaminants (29 CFR 1910.1000) (02 2006)
Calcium Carbonate (Limestone) - Respirable fraction.	PEL	5 mg/m3	US. OSHA Table Z-1 Limits for Air Contaminants (29 CFR 1910.1000) (02 2006)
Calcium oxide	TWA	2 mg/m3	US. ACGIH Threshold Limit Values (2011)
	PEL	5 mg/m3	US. OSHA Table Z-1 Limits for Air Contaminants (29 CFR 1910.1000) (02 2006)
Titanium dioxide	TWA	10 mg/m3	US. ACGIH Threshold Limit Values (2011)
Titanium dioxide - Total dust.	PEL	15 mg/m3	US. OSHA Table Z-1 Limits for Air Contaminants (29 CFR 1910.1000) (02 2006)
Stearic acid	TWA	10 mg/m3	US. ACGIH Threshold Limit Values (2011)
Hydrotreated heavy naphthenic distillate - Inhalable fraction.	TWA	5 mg/m3	US. ACGIH Threshold Limit Values (03 2014)
Hydrotreated heavy naphthenic distillate	PEL	500 ppm 2,000 mg/m3	US. OSHA Table Z-1 Limits for Air Contaminants (29 CFR 1910.1000) (02 2006)
Hydrotreated heavy naphthenic distillate - Mist.	PEL	5 mg/m3	US. OSHA Table Z-1 Limits for Air Contaminants (29 CFR 1910.1000) (02 2006)

Chemical name	type	Exposure Limit Values	Source
Calcium carbonate - Total dust.	STEL	20 mg/m3	Canada. British Columbia OELs. (Occupational Exposure Limits for Chemical Substances, Occupational Health and Safety Regulation 296/97, as amended) (07 2007)
Calcium carbonate - Respirable fraction.	TWA	3 mg/m3	Canada. British Columbia OELs. (Occupational Exposure Limits for Chemical Substances, Occupational Health and Safety Regulation 296/97, as amended) (07 2007)
Calcium carbonate - Total dust.	TWA	10 mg/m3	Canada. British Columbia OELs. (Occupational Exposure Limits for Chemical Substances, Occupational Health and Safety Regulation 296/97, as amended) (07 2007)
Calcium carbonate - Total dust.	TWA	10 mg/m3	Canada. Quebec OELs. (Ministry of Labor - Regulation Respecting the Quality of the Work Environment) (12 2008)
Calcium Carbonate (Limestone) - Total dust.	STEL	20 mg/m3	Canada. British Columbia OELs. (Occupational Exposure Limits for Chemical Substances, Occupational Health and Safety Regulation 296/97, as amended) (07 2007)
	TWA	10 mg/m3	Canada. British Columbia OELs. (Occupational Exposure Limits for Chemical Substances, Occupational Health and Safety Regulation 296/97, as amended) (07 2007)

Calcium Carbonate (Limestone) - Respirable fraction.	TWA	3 mg/m3	Canada. British Columbia OELs. (Occupational Exposure Limits for Chemical Substances, Occupational Health and Safety Regulation 296/97, as amended) (07 2007)
Calcium Carbonate (Limestone) - Total dust.	TWA	10 mg/m3	Canada. Quebec OELs. (Ministry of Labor - Regulation Respecting the Quality of the Work Environment) (12 2008)
Diisodecyl phthalate	TWAEV	5 mg/m3	Canada. Ontario OELs. (Control of Exposure to Biological or Chemical Agents) (11 2010)
Calcium oxide	TWA	2 mg/m3	Canada. British Columbia OELs. (Occupational Exposure Limits for Chemical Substances, Occupational Health and Safety Regulation 296/97, as amended) (07 2007)
Calcium oxide	TWAEV	2 mg/m3	Canada. Ontario OELs. (Control of Exposure to Biological or Chemical Agents) (11 2010)
Calcium oxide	TWA	2 mg/m3	Canada. Quebec OELs. (Ministry of Labor - Regulation Respecting the Quality of the Work Environment) (12 2008)
Vinyltrimethoxysilane	STEL	10 ppm 60 mg/m3	Canada. Ontario OELs. (Control of Exposure to Biological or Chemical Agents) (11 2010)
Titanium dioxide - Total dust.	TWA	10 mg/m3	Canada. British Columbia OELs. (Occupational Exposure Limits for Chemical Substances, Occupational Health and Safety Regulation 296/97, as amended) (07 2007)
Titanium dioxide - Respirable fraction.	TWA	3 mg/m3	Canada. British Columbia OELs. (Occupational Exposure Limits for Chemical Substances, Occupational Health and Safety Regulation 296/97, as amended) (07 2007)
Titanium dioxide	TWAEV	10 mg/m3	Canada. Ontario OELs. (Control of Exposure to Biological or Chemical Agents) (11 2010)
Titanium dioxide - Total dust.	TWA	10 mg/m3	Canada. Quebec OELs. (Ministry of Labor - Regulation Respecting the Quality of the Work Environment) (12 2008)
Hydrotreated heavy naphthenic distillate - Mist.	TWA	0.2 mg/m3	Canada. British Columbia OELs. (Occupational Exposure Limits for Chemical Substances, Occupational Health and Safety Regulation 296/97, as amended) (05 2013)
	TWA	1 mg/m3	Canada. British Columbia OELs. (Occupational Exposure Limits for Chemical Substances, Occupational Health and Safety Regulation 296/97, as amended) (05 2013)

Hydrotreated heavy naphthenic distillate - Mist.	TWAEV	5 mg/m3	Canada. Ontario OELs. (Control of Exposure to Biological or Chemical Agents) (11 2010)
	STEL	10 mg/m3	Canada. Ontario OELs. (Control of Exposure to Biological or Chemical Agents) (11 2010)
Hydrotreated heavy naphthenic distillate - Mist.	TWA	5 mg/m3	Canada. Quebec OELs. (Ministry of Labor - Regulation Respecting the Quality of the Work Environment) (12 2008)
	STEL	10 mg/m3	Canada. Quebec OELs. (Ministry of Labor - Regulation Respecting the Quality of the Work Environment) (12 2008)

Appropriate Engineering Controls Mechanical ventilation or local exhaust ventilation may be required. Observe good industrial hygiene practices. Observe occupational exposure limits and minimize the risk of inhalation of dust.

Individual protection measures, such as personal protective equipment

General information: Good general ventilation (typically 10 air changes per hour) should be used. Ventilation rates should be matched to conditions. Supplementary local exhaust ventilation, closed systems, or respiratory and eye protection may be needed in special circumstances, such as poorly ventilated spaces, heating, evaporation of liquids from large surfaces, spraying of mists, mechanical generation of dusts, drying of solids, etc.

Eye/face protection: Wear safety glasses with side shields (or goggles).

Skin Protection

Hand Protection: Use suitable protective gloves if risk of skin contact.

Other: Wear suitable protective clothing.

Respiratory Protection: In case of inadequate ventilation use suitable respirator. Seek advice from local supervisor.

Hygiene measures: Observe good industrial hygiene practices. Wash hands before breaks and immediately after handling the product. Do not handle until all safety precautions have been read and understood. Obtain special instructions before use.

9. Physical and chemical properties

Appearance

Physical state: solid
Form: Paste
Color: Various
Odor: Mild
Odor threshold: No data available.
pH: No data available.
Melting point/freezing point: No data available.
Initial boiling point and boiling range: No data available.

Flash Point:	No data available.
Evaporation rate:	Slower than n-Butyl Acetate
Flammability (solid, gas):	No
Upper/lower limit on flammability or explosive limits	
Flammability limit - upper (%):	No data available.
Flammability limit - lower (%):	No data available.
Explosive limit - upper (%):	No data available.
Explosive limit - lower (%):	No data available.
Vapor pressure:	No data available.
Vapor density:	Vapors are heavier than air and may travel along the floor and in the bottom of containers.
Relative density:	1.5212
Solubility(ies)	
Solubility in water:	Insoluble in water
Solubility (other):	No data available.
Partition coefficient (n-octanol/water):	No data available.
Auto-ignition temperature:	No data available.
Decomposition temperature:	No data available.
Viscosity:	No data available.

10. Stability and reactivity

Reactivity:	No data available.
Chemical Stability:	Material is stable under normal conditions.
Possibility of hazardous reactions:	No data available.
Conditions to avoid:	Avoid heat or contamination.
Incompatible Materials:	Alcohols. Amines. Strong acids. Strong bases. Water, moisture.
Hazardous Decomposition Products:	Thermal decomposition or combustion may liberate carbon oxides and other toxic gases or vapors.

11. Toxicological information

Information on likely routes of exposure

Ingestion:	May be ingested by accident. Ingestion may cause irritation and malaise.
Inhalation:	In high concentrations, vapors, fumes or mists may irritate nose, throat and mucus membranes.
Skin Contact:	May be harmful in contact with skin. Causes mild skin irritation.
Eye contact:	Eye contact is possible and should be avoided.

Information on toxicological effects

Acute toxicity (list all possible routes of exposure)

Oral
Product: ATEmix: 82,880.4 mg/kg

Dermal
Product: ATEmix: 4,432.29 mg/kg

Inhalation
Product: No data available.

Repeated dose toxicity
Product: No data available.

Skin Corrosion/Irritation
Product: No data available.

Serious Eye Damage/Eye Irritation
Product: No data available.

Specified substance(s):

Calcium carbonate	in vivo (Rabbit, 24 - 72 hrs): Not irritating
Butyl benzyl phthalate	in vivo (Rabbit, 24 - 72 hrs): Not irritating
Calcium oxide	in vivo (Rabbit, 1 hrs): Irritating
Titanium dioxide	in vivo (Rabbit, 24 - 72 hrs): Not irritating
Stearic acid	in vivo (Rabbit, 27 - 72 hrs): Not irritating
Hydrotreated heavy naphthenic distillate	in vivo (Rabbit, 24 hrs): Not irritating

Respiratory or Skin Sensitization
Product: No data available.

Carcinogenicity
Product: No data available.

IARC Monographs on the Evaluation of Carcinogenic Risks to Humans:

Titanium dioxide	Overall evaluation: Possibly carcinogenic to humans.
Hydrotreated heavy naphthenic distillate	Overall evaluation: Not classifiable as to carcinogenicity to humans. Overall evaluation: Carcinogenic to humans.

US. National Toxicology Program (NTP) Report on Carcinogens:

Hydrotreated heavy naphthenic distillate	Known To Be Human Carcinogen.

US. OSHA Specifically Regulated Substances (29 CFR 1910.1001-1050):
No carcinogenic components identified

Germ Cell Mutagenicity

In vitro
Product: No data available.

In vivo
Product: No data available.

Reproductive toxicity
Product: May damage fertility or the unborn child.

Specific Target Organ Toxicity - Single Exposure
Product: No data available.

Specific Target Organ Toxicity - Repeated Exposure
Product: No data available.

Aspiration Hazard
Product: No data available.

Other effects: No data available.

12. Ecological information

Ecotoxicity:

Acute hazards to the aquatic environment:

Fish
Product: No data available.

Specified substance(s):

Calcium carbonate	LC 50 (Western mosquitofish (Gambusia affinis), 96 h): > 56,000 mg/l Mortality
Butyl benzyl phthalate	LC 50 (Fathead minnow (Pimephales promelas), 96 h): 1.39 - 3.88 mg/l

	Mortality
Titanium dioxide	LC 50 (Mummichog (Fundulus heteroclitus), 96 h): > 1,000 mg/l Mortality

Aquatic Invertebrates

Product: No data available.

Specified substance(s):

Butyl benzyl phthalate	EC 50 (Water flea (Daphnia magna), 48 h): > 10 mg/l Intoxication EC 50 (Opossum shrimp (Americamysis bahia), 48 h): > 0.9 mg/l Mortality EC 50 (Water flea (Daphnia magna), 24 h): > 10 mg/l Intoxication EC 50 (Water flea (Daphnia magna), 21 d): > 0.76 mg/l Intoxication EC 50 (Water flea (Daphnia magna), 14 d): > 0.76 mg/l Intoxication
Titanium dioxide	EC 50 (Water flea (Daphnia magna), 48 h): > 1,000 mg/l Intoxication

Chronic hazards to the aquatic environment:

Fish

Product: No data available.

Specified substance(s):

Butyl benzyl phthalate	NOAEL (Pimephales promelas, 126 d): 64.6 - 67.5 µg/l experimental result
Calcium oxide	NOAEL (Oncorhynchus mykiss, 60 d): 307 mg/l interpreted
Titanium dioxide	LC 0 (Coregonus autumnalis migratorius G., 30 d): 3 mg/l experimental result
Hydrotreated heavy naphthenic distillate	NOAEL (Oncorhynchus mykiss, 14 d): >= 1,000 mg/l QSAR

Aquatic Invertebrates

Product: No data available.

Toxicity to Aquatic Plants

Product: No data available.

Persistence and Degradability

Biodegradation

Product: No data available.

BOD/COD Ratio

Product: No data available.

Bioaccumulative Potential

Bioconcentration Factor (BCF)

Product: No data available.

Specified substance(s):

Butyl benzyl phthalate	Bluegill (Lepomis macrochirus), Bioconcentration Factor (BCF): 772 (Flow through)

Partition Coefficient n-octanol / water (log Kow)

Product:	No data available.
Specified substance(s):	
Butyl benzyl phthalate	Log Kow: 4.91
Stearic acid	Log Kow: 8.23

Mobility in Soil: No data available.

Other Adverse Effects: Very toxic to aquatic organisms.

13. Disposal considerations

Disposal instructions: Dispose of waste at an appropriate treatment and disposal facility in accordance with applicable laws and regulations, and product characteristics at time of disposal.

Contaminated Packaging: No data available.

14. Transport information

TDG:

Not Regulated

CFR / DOT:

Not Regulated

IMDG:

UN3077, ENVIRONMENTALLY HAZARDOUS SUBSTANCE, SOLID, N.O.S. (Butyl Benzyl Phthalate), 9, PG III, MARINE POLLUTANT

Further Information:

The above shipping description may not be accurate for all container sizes and all modes of transportation. Please refer to Bill of Lading.

15. Regulatory information

US Federal Regulations

TSCA Section 12(b) Export Notification (40 CFR 707, Subpt. D)

None present or none present in regulated quantities.

US. OSHA Specifically Regulated Substances (29 CFR 1910.1001-1050)

None present or none present in regulated quantities.

CERCLA Hazardous Substance List (40 CFR 302.4):

Chemical Identity	Reportable quantity
Butyl benzyl phthalate	100 lbs.
Dibutyl phthalate	10 lbs.
Methanol	5000 lbs.
Acetic acid	5000 lbs.

Superfund Amendments and Reauthorization Act of 1986 (SARA)

Hazard categories
Delayed (Chronic) Health Hazard

SARA 302 Extremely Hazardous Substance
None present or none present in regulated quantities.

SARA 304 Emergency Release Notification

Chemical Identity	Reportable quantity
Butyl benzyl phthalate	100 lbs.
Diisodecyl phthalate	
Dibutyl phthalate	10 lbs.
Diisodecyl phthalate (mixed Is)	
Methanol	5000 lbs.
Acetic acid	5000 lbs.

SARA 311/312 Hazardous Chemical

Chemical Identity	Threshold Planning Quantity
Calcium carbonate	500 lbs
Butyl benzyl phthalate	500 lbs
Calcium Carbonate (Limestone)	500 lbs
Calcium oxide	500 lbs
Titanium dioxide	500 lbs
Stearic acid	500 lbs
Hydrotreated heavy naphthenic distillate	500 lbs

SARA 313 (TRI Reporting)
None present or none present in regulated quantities.

Clean Water Act Section 311 Hazardous Substances (40 CFR 117.3)
None present or none present in regulated quantities.

Clean Air Act (CAA) Section 112(r) Accidental Release Prevention (40 CFR 68.130):
None present or none present in regulated quantities.

US State Regulations

US. California Proposition 65
This product contains chemical(s) known to the State of California to cause cancer and/or to cause birth defects or other reproductive harm.

US. New Jersey Worker and Community Right-to-Know Act

Chemical Identity
Calcium carbonate
Butyl benzyl phthalate
Calcium Carbonate (Limestone)
Calcium oxide
Hydrotreated heavy naphthenic distillate

US. Massachusetts RTK - Substance List

Chemical Identity
Calcium carbonate
Butyl benzyl phthalate
Calcium Carbonate (Limestone)
Calcium oxide
Crystalline Silica (Quartz)/ Silica Sand

US. Pennsylvania RTK - Hazardous Substances

Chemical Identity
Calcium carbonate
Butyl benzyl phthalate
Calcium Carbonate (Limestone)
Diisodecyl phthalate
Calcium oxide

US. Rhode Island RTK

Chemical Identity
Butyl benzyl phthalate
Diisodecyl phthalate

Other Regulations:

Regulatory VOC (less water and exempt solvent):	6 g/l
VOC Method 310:	0.39 %

Inventory Status:

Australia AICS:	One or more components in this product are not listed on or exempt from the Inventory.
Canada DSL Inventory List:	All components in this product are listed on or exempt from the Inventory.
EINECS, ELINCS or NLP:	One or more components in this product are not listed on or exempt from the Inventory.
Japan (ENCS) List:	One or more components in this product are not listed on or exempt from the Inventory.
China Inv. Existing Chemical Substances:	One or more components in this product are not listed on or exempt from the Inventory.
Korea Existing Chemicals Inv. (KECI):	One or more components in this product are not listed on or exempt from the Inventory.

Canada NDSL Inventory:	One or more components in this product are not listed on or exempt from the Inventory.
Philippines PICCS:	One or more components in this product are not listed on or exempt from the Inventory.
US TSCA Inventory:	All components in this product are listed on or exempt from the Inventory.
New Zealand Inventory of Chemicals:	One or more components in this product are not listed on or exempt from the Inventory.
Japan ISHL Listing:	One or more components in this product are not listed on or exempt from the Inventory.
Japan Pharmacopoeia Listing:	One or more components in this product are not listed on or exempt from the Inventory.

16.Other information, including date of preparation or last revision

Revision Date:	11/23/2015
Version #:	1.0
Further Information:	No data available.
Disclaimer:	For Industrial Use Only. Keep out of Reach of Children. The hazard information herein is offered solely for the consideration of the user, subject to their own investigation of compliance with applicable regulations, including the safe use of the product under every foreseeable condition.

TREMCO

Spectrem® 2

High Performance Silicone Sealant

G

Product Description:
Spectrem 2 is a medium-modulus, one-part, high-performance, neutral-cure silicone sealant, ideal for a variety of perimeter caulking and glazing applications.

Basic Uses:
Spectrem 2 is suitable for both caulking and glazing applications, including cap beads, toe beads, heel beads and other typical air seals. It is particularly appropriate as a weather seal and tensile bead in two-sided structural glazing systems and ideal for sealing joints within the curtainwall or window systems.

Spectrem 2 may be used as a weather seal for materials such as aluminum, glass, steel, painted metal, plastic, stone, concrete and brick. Spectrem 2 exhibits primerless adhesion to many common building materials.

"All" Structural Glazing Applications must be reviewed and approved by Tremco Technical Service prior to the application of Spectrem 2.

Limitations:
- Do not apply to damp or contaminated surfaces.
- Use with adequate ventilation.
- Clear silicones are not recommended for structural glazing applications.

Packaging:
1/12 gallon (300mL) cartridges, 20 oz. (600mL) sausages, 2 gallon (7.57 L) and 4.5 (17.1 L) gallon pails and 55 gallon (208 L) drums.

Standard Colors:
White, Off-White, Clear, Graystone, Gray, Bronze, Light Bronze, Limestone and Black.

Applicable Standards:
Conforms to ASTM C920 Type S, Grade NS, Class 50, Use NT, M, G, A and O, CAN/CGSB-19.13-M87, U.S. Federal Specification TT-S-001543A (COM-NBS) Class A, and U.S. Federal Specification TT-S-00230C (COM-NBS) Class A, Type II. Black Spectrem 2 meets all of AAMA 802.3-92 (Type I and II), 805.2-94 (Group C), and 808.3-92.

INSTALLATION

Joint Design:
May be used in any joint designed in accordance with accepted architectural/engineering practices. Joint width should be 4 times anticipated movement, but not less than 1/4 inch (6.4mm) wide.

Joint Dimensions:
For joints 1/4 inch (6.4mm) to 1/2 inch (12.7mm) wide, the width to depth ratio should be equal. Joints 1/2 inch (12.7mm) wide or greater should have a depth of 1/2 inch (12.7mm). Minimum joint size is 1/4 inch by 1/4 inch (6.4mm by 6.4mm).

Surface Preparation:
For good adhesion, the joint interface must be sound, clean and dry. Depending on the substrates, the joint surface may require a thorough wire brushing, grinding, sandblasting, solvent washing and/or primer.

Tooling & Cleaning:
Tooling is recommended immediately after application to insure firm, intimate contact with the joint interface. Dry tooling is preferred. Cleaning can be accomplished with solvents such as Xylene, Toluene or MEK while sealant is in an uncured state.



G

Joint Backing-Bond Breaking Tape:
Closed cell polyethylene backer rods are preferred as joint backing to control depth of sealant bead. Where depth of joint will prevent use of joint backing, an adhesive-backed polyethylene tape should be installed to prevent three-sided adhesion. Joint backing must be dry at time of sealant application.

Application:
Spectrem 2 is easy to apply with conventional caulking equipment. Fill joint completely and tool. At 75˚F (23.9˚C), 50% R.H. a durable skin will form typically within less than 10 minutes.

Maintenance:
Damaged sealant can be repaired. Consult your Tremco Distributor or Representative for repair procedures.

Availability:
Immediately available from your local Tremco Field Representative, Tremco Distributor or Tremco Warehouse.

Warranty:
Tremco warranties its Sealants to be free of defects in material, but makes no warranty as to appearance or color. Since methods of application and on-site conditions are beyond our control and can affect performance, Tremco makes no other warranty, expressed or implied, including warranties of MERCHANTABILITY and FITNESS FOR A PARTICULAR PURPOSE, with respect to Sealants. Tremco's sole obligation shall be, at its option, to replace, or to refund the purchase price of the quantity of Sealant proved to be defective and Tremco shall not be liable for any loss or damage.

TYPICAL PHYSICAL PROPERTIES

Property	Test Method	Typical Value
As Supplied:		
Tack-free time	ASTM C-679	20-40 minutes
Sag	ASTM D-2202	0-0.1mm (0-0.03")
Tooling Time	Skin formation	10-20 minutes
As Cured: After 14 days at 77˚F (25˚C) and 50% R.H.		
Hardness (Shore A)	ASTM C-661	37-40
Tensile strength at maximum elongation	ASTM D-412	1.52-1.59 MPa (220-230 psi)
Elongation	ASTM D-412	235-260%
Tensile Strength at 100% elongation	ASTM C-1135	0.62-0.69 MPa (90-100 psi)
Tear Strength	ASTM D-624	6.14-7.02 kN/m (35-40 pli)
Peel Strength Aluminum, Glass	ASTM C-794	2.81-3.86 kN/m (16-22 pli)
Cyclic movement	ASTM C-719	±50%

NOTE: The foregoing information is published as general information only. The listed properties and performance characteristics are approximate values and are not part of the product specification.



For MSDS and Spec Data Sheets, Call our 24 Hour Fax-Back Line:
1-800-551-2806
or visit our website:
www.tremcosealants.com

TREMCO
Sealant/Weatherproofing Division
3735 Green Road • Beachwood, Ohio • 44122 • Phone: (216) 292-5000 • (800) 321-7906
220 Wicksteed Avenue • Toronto, ON M4H 1G7 • Phone: (416) 421-3300 • (800) 363-3213
1451 Jacobson Avenue • Ashland, Ohio • 44805 • Phone: (800) 321-6357 • Fax (419) 289-6645

SPECTREM 2 ALUMINUM STONE

Version *2.0* Print Date 12/06/2013
REVISION DATE: 07/08/2012

SECTION 1 - PRODUCT IDENTIFICATION

Trade name	:	SPECTREM 2 ALUMINUM STONE
Product code	:	947851 502
COMPANY	:	Tremco Incorporated 3735 Green Road Cleveland, OH 44122
Telephone	:	(216) 292-5000 8:30 - 5:00 EST
Emergency Phone:	:	(216) 765-6727 8:30 - 5:00 EST After Hours: Chemtrec 1-800-424-9300
Product use	:	Sealant

SECTION 2 - HAZARDS IDENTIFICATION

Emergency Overview

Gray. Non-sag gunnable paste. May cause slight irritation to the respiratory system. Leave area to breathe fresh air. Avoid further overexposure. If symptoms persist, get medical attention.

Acute Potential Health Effects/ Routes of Entry

Inhalation	:	May cause slight irritation to the respiratory system.
Eyes	:	Direct contact may cause moderate irritation.
Ingestion	:	May cause irritation to the mouth, throat and stomach.
Skin	:	May cause mild irritation.

Aggravated Medical Conditions

Pre-existing eye, skin, liver, kidney, and respiratory disorders may be aggravated by exposure.

Chronic Health Effects

Possible skin sensitization. As a by-product of curing up to 4% Methyl Ethyl Ketoxime (MEKO) may be released within product. Repeated and prolonged exposure to MEKO can cause allergic skin reaction. It may adversely affect the blood, (methemoglobinemia and anemia). Inhalation of crystalline silica (quartz) can cause cancer based on animal data, and IARC concludes sufficient evidence in humans (Group 1). Prolonged and repeated overexposure to free crystalline silica dust above the TLV level may cause scarring of the lungs with cough and shortness of breath. A delayed lung injury, silicosis may result from breathing free silica. Organosilane may cause liver injury with fibrosis after repeated and prolonged overexposure. Fillers are encapsulated and not expected to be released from product under normal conditions of use.

Target Organs: Skin, Blood, Lung, Liver, Kidney

SECTION 3 - PRODUCT COMPOSITION

Chemical Name	CAS-No.	Weight %
Calcium Carbonate (Limestone)	1317-65-3	40.0 - 70.0
Silicone polymer	NJ TSRN# 51721300-5110P	30.0 - 60.0
Polydimethylsiloxane, trimethyl endcap	63148-62-9	7.0 - 13.0
Amorphous silica	7631-86-9	3.0 - 7.0
Organosilane	NJ TSRN# 51721300-5368P	1.0 - 5.0
Crystalline Silica (Quartz)/ Silica Sand	14808-60-7	- <1.0

SECTION 4 - FIRST AID MEASURES

Get immediate medical attention for any significant overexposure.

Inhalation	:	Leave area to breathe fresh air. Avoid further overexposure. If symptoms persist, get medical attention.
Eye contact	:	Flush with water for at least 15 minutes while holding eye lids apart. Get medical attention immediately.
Skin contact	:	Clean area of contact thoroughly using soap and water. If irritation, rash or other disorders develop, get medical attention immediately.
Ingestion	:	Do not induce vomiting unless advised by a physician. Call nearest Poison Control Center or Physician immediately.

SECTION 5 - FIRE FIGHTING MEASURES

Flash point	:	Not available.
Method	:	Not available.
Burning rate	:	Non-flammable solid
Lower explosion limit	:	Not available.
Upper explosion limit	:	Not available.
Autoignition temperature	:	Not available.
Extinguishing media	:	If water fog is ineffective, use carbon dioxide, dry chemical or foam.
Hazardous combustion products	:	Smoke, fumes.Carbon monoxide and carbon dioxide can form.Silicon oxides and trace amounts of MEKO.
Protective equipment for firefighters	:	Use accepted fire fighting techniques. Wear full firefighting protective clothing, including self-contained breathing apparatus (SCBA).
Fire and explosion conditions	:	This product not expected to ignite under normal conditions of use.

SECTION 6 - ACCIDENTAL RELEASE MEASURES

Use appropriate protective equipment. Avoid contact with material. Keep out of water courses. Scrape up and transfer to appropriate container for disposal.

SECTION 7 - HANDLING AND STORAGE

Personal protective equipment must be worn during maintenance or repair of contaminated mixer, reactor, or other equipment. Do not use in confined or poorly ventilated areas. Prevent inhalation of vapor, ingestion, and contact with skin eyes and clothing. Keep container closed when not in use. Precautions also apply to emptied containers. Change soiled work clothes frequently. Clean hands thoroughly after handling. Store in sealed containers in a cool, dry, ventilated warehouse location.

SECTION 8 - EXPOSURE CONTROLS / PERSONAL PROTECTION

Personal protection equipment

Respiratory protection	:	Wear appropriate, properly fitted NIOSH/MSHA approved respirator, as directed by the manufacturer, when the airborne contaminant level(s) exceed the exposure limits indicated on the MSDS.
Hand protection	:	Use suitable impervious rubber or vinyl gloves and protective apparel to reduce exposure.
Eye protection	:	Wear appropriate eye protection.Use safety glasses if eye contact is likely.
Skin and body protection	:	Prevent contact with shoes and clothing.
Protective measures	:	Use professional judgment in the selection, care, and use.
Engineering measures	:	General ventilation is sufficient.

Exposure Limits

Chemical Name	CAS Number	Regulation	Limit	Form
Calcium Carbonate (Limestone)	1317-65-3	OSHA PEL: OSHA PEL: ACGIH TWA: ACGIH TWA: OSHA TWA: OSHA TWA:	5 mg/m3 15 mg/m3 3 mg/m3 10 mg/m3 15 mg/m3 5 mg/m3	Respirable fraction. Total dust. Respirable particles. Inhalable particles. Total dust. Respirable fraction.
Amorphous silica	7631-86-9	ACGIH TWA: ACGIH TWA: OSHA PEL: OSHA PEL: OSHA TWA:	3 mg/m3 10 mg/m3 15 mg/m3 5 mg/m3 0.8 mg/m3	Respirable particles. Inhalable particles. Total dust. Respirable fraction.
Crystalline Silica (Quartz)/ Silica Sand	14808-60-7	OSHA TWA: OSHA TWA: OSHA PEL: OSHA PEL: ACGIH TWA:	0.1 mg/m3 0.3 mg/m3 15 mg/m3 5 mg/m3 0.025 mg/m3	Respirable. Total dust. Total dust. Respirable fraction. Respirable fraction.

SECTION 9 - PHYSICAL AND CHEMICAL PROPERTIES

Form	:	Non-sag gunnable paste
Color	:	Gray
Odor	:	Oxime
pH	:	Not available.
Vapour pressure	:	Not available.
Vapor density	:	Heavier than air
Melting point/range	:	Not available.
Freezing point	:	Not available.
Boiling point/range	:	Not available.
Water solubility	:	Negligible
Specific Gravity	:	1.34

% Volatile Weight : 2 %

SECTION 10 - REACTIVITY / STABILITY

Substances to avoid : Strong acids.Strong bases.Alcohols.Water or moisture and oxidizing agents.

Stability : Material is stable under normal storage, handling, and use.

Hazardous polymerization : Will not occur.

SECTION 11 - TOXICOLOGICAL INFORMATION

Amorphous silica, CAS-No.: 7631-86-9
Acute oral toxicity (LD-50 oral) 22,500 mg/kg (Rat) 15,000 mg/kg (Mouse)

SECTION 12 - ECOLOGICAL INFORMATION

No Data Available

SECTION 13 - DISPOSAL CONSIDERATIONS

Disposal Method : Waste not regulated under RCRA. Incinerate at EPA approved facility or dispose of waste in compliance with state and local regulations.

SECTION 14 - TRANSPORTATION / SHIPPING DATA

CFR / DOT:

Not Regulated

TDG:

Not Regulated

IMDG:

Not Regulated

SECTION 15 - REGULATORY INFORMATION

North American Inventories:

All components are listed or exempt from the TSCA inventory.
This product or its components are listed on, or exempt from the Canadian Domestic Substances List.

U.S. Federal Regulations:

SARA 313 Components : None present or none present in regulated quantities.

SARA 311/312 Hazards : Acute Health Hazard
Chronic Health Hazard

OSHA Hazardous Components :

Calcium Carbonate (Limestone)	1317-65-3
Amorphous silica	7631-86-9
Crystalline Silica (Quartz)/ Silica Sand	14808-60-7

OSHA Status: Considered hazardous based on the following criteria: : Irritant
Carcinogen

OSHA Flammability : Not Regulated

Regulatory VOC (less water and exempt solvent) : 34 g/l

VOC Method 310 : 2 %

Chemical is listed as an IARC, NTP, OSHA, or ACGIH Carcinogen:
Crystalline Silica (Quartz)/ Silica Sand 14808-60-7

U.S. State Regulations:

MASS RTK Components :	Calcium Carbonate (Limestone)	1317-65-3
	Amorphous silica	7631-86-9
Penn RTK Components :	Calcium Carbonate (Limestone)	1317-65-3
	Silicone polymer	NJ TSRN# 51721300-5110P
	Polydimethylsiloxane, trimethyl endcap	63148-62-9
	Amorphous silica	7631-86-9
NJ RTK Components :	Calcium Carbonate (Limestone)	1317-65-3
	Silicone polymer	NJ TSRN# 51721300-5110P
	Polydimethylsiloxane, trimethyl endcap	63148-62-9
	Amorphous silica	7631-86-9
	Organosilane	NJ TSRN# 51721300-5368P
	Crystalline Silica (Quartz)/ Silica Sand	14808-60-7

Components under California Proposition 65:
WARNING! Contains chemicals known to the State of California to cause cancer, birth defects and/or other reproductive harm

SECTION 16 - OTHER INFORMATION

HMIS Rating :

Health	2
Flammability	1
Reactivity	0
PPE	

0 = Minimum
1 = Slight
2 = Moderate
3 = Serious
4 = Severe

SPECTREM 2 ALUMINUM STONE

Version *2.0* Print Date 12/06/2013
REVISION DATE: 07/08/2012

Further information:

For Industrial Use Only. Keep out of Reach of Children. The hazard information herein is offered solely for the consideration of the user, subject to their own investigation of compliance with applicable regulations, including the safe use of the product under every foreseeable condition.

Prepared by: Rich Mikol

Legend

ACGIH - American Conference of Governmental Hygienists
CERCLA - Comprehensive Environmental Response, Compensation, and Liability Act
DOT - Department of Transportation
DSL - Domestic Substance List
EPA - Environmental Protection Agency
HMIS - Hazardous Materials Information System
IARC - International Agency for Research on Cancer
MSHA - Mine Safety Health Administration
NDSL - Non-Domestic Substance List
NIOSH - National Institute for Occupational Safety and Health
NTP - National Toxicology Program
OSHA - Occupational Safety and Health Administration
PEL - Permissible Exposure Limit
RCRA - Resource Conservation and Recovery Act
RTK - Right To Know
SARA - Superfund Amendments and Reauthorization Act
STEL - Short Term Exposure Limit
TLV - Threshold Limit Value
TSCA - Toxic Substances Control Act
TWA - Time Weighted Average
V - Volume
VOC - Volatile Organic Compound
WHMIS - Workplace Hazardous Materials Information System

Safety Data Sheet

24 Hour Emergency Phone Numbers
Medical/Poison Control:
In U.S.: Call 1-800-222-1222

Outside U.S.: Call your local poison control center

Transportation/National Response Center:

1-800-535-5053
1-352-323-3500

NOTE: The National ResponseCenter emergency numbers to be used only in the event of chemical emergencies involving a spill, leak, fire, exposure or accident involving chemicals.

IMPORTANT: Provide this information to employees, customers, and users of this product. Read this SDS before handling or disposing of this product. This product is covered by the OSHA Hazard Communication Standard and this document has been prepared in accordance with requirements of this standard. All abbreviated terms used in this MSDS are further described in Section 16.

1. Identification

This Material Safety Data Sheet is available in American Spanish upon request.
Los Datos de Serguridad del Producto pueden obtenerse en Espanol si lo riquiere.

Product Name:	Alex Plus Clear	**Revision Date:**	6/19/2015
Product UPC Number:	18071	**Supercedes Date:**	7/10/2014
Product Use/Class:	Caulking Compound	**SDS No:**	00010019001
Manufacturer:	DAP Products Inc. 2400 Boston Street Suite 200 Baltimore, MD 21224-4723 888-327-8477 (non - emergency matters)		
Preparer:	Regulatory Department		

2. Hazards Identification

EMERGENCY OVERVIEW: Under normal use conditions, this product is not expected to cause adverse health effects. This product contains ethylene glycol.

GHS Classification
Not a hazardous substance or mixture.

Symbol(s) of Product

None

Signal Word
Not a hazardous substance or mixture.

3. Composition/Information on Ingredients

Chemical Name	CAS-No.	Wt. %	GHS Symbols	GHS Statements
White mineral oil	8042-47-5	10-25	GHS03-GHS07-GHS08	H270-304-312

Ethylene glycol	107-21-1	1.0-2.5	GHS03-GHS06	H270-331
Amorphous silica	112945-52-5	1.0-2.5	GHS03-GHS07	H270-315-319-332-335
Poly(oxy-1,2-ethanediyl), α-sulfo-ω-(nonylphenoxy)-, branched, sodium salt	68891-39-4	0.1-1.0	GHS03	H270

The text for GHS Hazard Statements shown above (if any) is given in the "Other information" Section.

4. First-aid Measures

FIRST AID - INHALATION: Material is not likely to present an inhalation hazard at ambient conditions. If you experience difficulty in breathing, leave the area to obtain fresh air. If continued difficulty is experienced, get medical attention immediately.

FIRST AID - SKIN CONTACT: No health hazards are known to exist. In case of contact, wash skin immediately with soap and water.

FIRST AID - EYE CONTACT: In case of contact, immediately flush eyes with large quantities of water for at least 15 minutes until irritation subsides. Get medical attention immediately.

FIRST AID - INGESTION: If swallowed, DO NOT INDUCE VOMITING. Get medical attention immediately.

5. Fire-fighting Measures

UNUSUAL FIRE AND EXPLOSION HAZARDS: None known.

SPECIAL FIREFIGHTING PROCEDURES: Wear self-contained breathing apparatus pressure-demand (NIOSH approved or equivalent) and full protective gear. Use water spray to cool exposed surfaces.

EXTINGUISHING MEDIA: Carbon Dioxide, Dry Chemical, Foam, Water Fog

6. Accidental Release Measures

ENVIRONMENTAL MEASURES: No Information

STEPS TO BE TAKEN IF MATERIAL IS RELEASED OR SPILLED: Contain spilled material and remove with inert absorbent. Dispose of contaminated absorbent, container and unused contents in accordance with local, state and federal regulations. Scrape up dried material and place into containers. Use personal protective equipment as necessary. In case of spillage, absorb with inert material and dispose of in accordance with applicable regulations.

7. Handling and Storage

HANDLING: KEEP OUT OF REACH OF CHILDREN!DO NOT TAKE INTERNALLY. Use only with adequate ventilation. Ensure fresh air entry during application and drying. Wash thoroughly after handling.

STORAGE: Avoid excessive heat and freezing. Do not store at temperatures above 120 degrees F. Store away from caustics and oxidizers.

8. Exposure Controls/Personal Protection

Ingredients with Occupational Exposure Limits

Chemical Name	ACGIH TLV-TWA	ACGIH-TLV STEL	OSHA PEL-TWA	OSHA PEL-CEILING
White mineral oil	N.E.	N.E.	N.E.	N.E.
Ethylene glycol	N.E.	N.E.	N.E.	N.E.
Amorphous silica	N.E.	N.E.	N.E.	N.E.
Poly(oxy-1,2-ethanediyl), α-sulfo-ω-(nonylphenoxy)-, branched, sodium salt	N.E.	N.E.	N.E.	N.E.

Further Advice: MEL = Maximum Exposure Limit OES = Occupational Exposure Standard SUP = Supplier's Recommendation Sk = Skin Sensitizer N.E. = Not Established

Personal Protection



RESPIRATORY PROTECTION: No personal respiratory protective equipment normally required.



SKIN PROTECTION: Rubber gloves.



EYE PROTECTION: Goggles or safety glasses with side shields.



OTHER PROTECTIVE EQUIPMENT: Not required under normal use.



HYGIENIC PRACTICES: Wash hands before breaks and at the end of workday. Remove and wash contaminated clothing before re-use.

9. Physical and Chemical Properties

Appearance:	White (changes to clear as it cures)	**Physical State:**	Paste
Odor:	Very Slight Ammonia	**Odor Threshold:**	Not Established
Density, g/cm3:	1.03 - 1.04	**pH:**	Between 7.0 and 12.0
Freeze Point, °C:	Not Established	**Viscosity (mPa.s):**	Not Established
Solubility in Water:	Not Established	**Partition Coeff., n-octanol/water:**	Not Established
Decomposition Temperature, °C:	Not Established	**Explosive Limits, %:**	N.I. - N.I.
Boiling Range, °C:	N.I. - N.I.	**Auto-Ignition Temperature, °C**	Not Established
Minimum Flash Point, °C:	93.3	**Vapor Pressure, mmHg:**	No Information
Evaporation Rate:	Slower Than n-Butyl Acetate	**Flash Method:**	Seta Closed Cup
Vapor Density:	Heavier Than Air		
Combustibility:	Does not support combustion		

(See "Other information" Section for abbreviation legend)
(If product is an aerosol, the flash point stated above is that of the propellant.)

10. Stability and Reactivity

STABILITY: Stable under recommended storage conditions.

CONDITIONS TO AVOID: Excessive heat and freezing.

INCOMPATIBILITY: Incompatible with strong bases and oxidizing agents.

HAZARDOUS DECOMPOSITION PRODUCTS: Normal decomposition products, i.e., COx, NOx.

11. Toxicological Information

EFFECT OF OVEREXPOSURE - INHALATION: Under normal use conditions, this product is not expected to cause adverse health effects. Inhalation of vapors in high concentration may cause mild irritation of respiratory system (nose, mouth, mucous membranes).

EFFECT OF OVEREXPOSURE - SKIN CONTACT: Under normal use conditions, this product is not expected to cause adverse health effects. Prolonged or repeated contact with skin may cause mild irritation.

EFFECT OF OVEREXPOSURE - EYE CONTACT: Under normal use conditions, this product is not expected to cause adverse health effects. Direct eye contact may cause irritation.

EFFECT OF OVEREXPOSURE - INGESTION: Under normal use conditions, this product is not expected to cause adverse health effects. Single dose oral toxicity is very low. Amounts ingested incidental to industrial handling are not likely to cause injury; however,

ingestion of large amounts may cause injury. Ingestion of ethylene glycol can cause gastrointestinal irritation, nausea, vomiting, diarrhea and if ingested in sufficient quantities, death.

CARCINOGENICITY: No Information

PRIMARY ROUTE(S) OF ENTRY: Inhalation, Skin Contact

Acute Toxicity Values
The acute effects of this product have not been tested. Data on individual components are tabulated below

CAS-No.	Chemical Name	Oral LD50	Dermal LD50	Vapor LC50
8042-47-5	White mineral oil	>5000 mg/kg Rat	2000 mg/kg Rabbit	>20 mg/L
107-21-1	Ethylene glycol	4000 mg/kg Rat	9530 mg/kg Rabbit	> 2.5 mg/L Rat
112945-52-5	Amorphous silica	>3300 mg/kg Rat	>2000 mg/kg Rabbit	>20 mg/L
68891-39-4	Poly(oxy-1,2-ethanediyl), α-sulfo-ω-(nonylphenoxy)-, branched, sodium salt	N.I.	N.I.	N.I.

N.I. = No Information

12. Ecological Information

ECOLOGICAL INFORMATION: Ecological injuries are not known or expected under normal use.

13. Disposal Information

DISPOSAL INFORMATION: This product does not meet the definition of a hazardous waste according to U.S. EPA Hazardous Waste Management Regulation, 40 CFR Section 261. Dispose as hazardous waste according to all local, state, federal and provincial regulations. State and Local regulations/restrictions are complex and may differ from Federal regulations. Responsibility for proper waste disposal is with the owner of the waste.

14. Transport Information

SPECIAL TRANSPORT PRECAUTIONS: No Information

DOT UN/NA Number:	N.A.
DOT Proper Shipping Name:	Not Regulated.
DOT Technical Name:	N.A.
DOT Hazard Class:	N.A.
Hazard SubClass:	N.A.
Packing Group:	N.A.

15. Regulatory Information

U.S. Federal Regulations:

CERCLA - SARA Hazard Category

This product has been reviewed according to the EPA 'Hazard Categories' promulgated under Sections 311 and 312 of the Superfund Amendment and Reauthorization Act of 1986 (SARA Title III) and is considered, under applicable definitions, to meet the following categories:

Acute Health Hazard, Chronic Health Hazard

SARA SECTION 313:

This product contains the following substances subject to the reporting requirements of Section 313 of Title III of the Superfund Amendment and Reauthorization Act of 1986 and 40 CFR part 372:

Chemical Name	CAS-No.
Ethylene glycol	107-21-1

TOXIC SUBSTANCES CONTROL ACT:

All ingredients in this product are either on TSCA inventory list, or otherwise exempt.
This product contains the following chemical substances subject to the reporting requirements of TSCA 12(B) if exported from the United States:

No TSCA 12(b) components exist in this product.

CALIFORNIA PROPOSITION 65 CARCINOGENS

WARNING: This product contains chemicals known to the State of California to cause cancer.

CALIFORNIA PROPOSITION 65 REPRODUCTIVE TOXINS

This product does not contain any chemicals known to the State of California to cause birth defects or other reproductive harm.

International Regulations: As follows -

CANADIAN WHMIS:

This MSDS has been prepared in compliance with Controlled Product Regulations except for the use of the 16 headings.

WHMIS Class Consumer Commodity

16. Other Information

Revision Date: 6/19/2015 **Supersedes Date:** 7/10/2014

Reason for revision: HazCom2012/GHS Conversion

Datasheet produced by: Regulatory Department

HMIS Ratings:

Health:	1	**Flammability:**	0	**Reactivity:**	0	**Personal Protection:**	X

VOC Less Water Less Exempt Solvent, g/L 44.0

VOC Material, g/L: 26

VOC as Defined by California Consumer Product Regulation, Wt/Wt%: 0.1

Text for GHS Hazard Statements shown in Section 3 describing each ingredient:

H270	May cause or intensify fire; oxidiser.
H304	May be fatal if swallowed and enters airways.
H312	Harmful in contact with skin.
H315	Causes skin irritation.
H319	Causes serious eye irritation.
H331	Toxic if inhaled.
H332	Harmful if inhaled.
H335	May cause respiratory irritation.

Icons for GHS Pictograms shown in Section 3 describing each ingredient:

GHS03



GHS06



GHS07



GHS08 

Legend: N.A. - Not Applicable, N.E. - Not Established, N.D. - Not Determined

DAP believes the data and statements contained herein are accurate as of the date hereof. They are offered in good faith as typical values and not as a product specification. NO WARRANTY OF MERCHANTABILITY, WARRANTY OF FITNESS FOR ANY PARTICULAR PURPOSE OR ANY OTHER WARRANTY, EXPRESS OR IMPLIED, IS MADE WITH REGARD TO THE INFORMATION HEREIN PROVIDED OR THE PRODUCT TO WHICH THE INFORMATION REFERS. Since thisdocument is intended only as a guide to the appropriate use and precautionary handling of the referenced product by a properly trained person, it is therefore the responsibility of the user to (i) review the recommendations with due consideration for the specific context of the intended use and (ii) determine if they are appropriate.

Safety Data Sheet



1 - Identification

Trade Name: WD-40 Specialist® Dirt & Dust Resistant Dry Lube **Chemical Name: Organic Mixture** **Product Use: Cleaner, Lubricant** **Restrictions on Use: None identified** **SDS Date Of Preparation: 07/13/14**	**Manufacturer: WD-40 Company** **Address: 1061 Cudahy Place (92110)** **P.O. Box 80607** **San Diego, California, USA** **92138 –0607** **Telephone:** **Emergency only: 1-888-324-7596 (PROSAR)** **Information: 1-888-324-7596** **Chemical Spills: 1-800-424-9300 (Chemtrec)** **1-703-527-3887 (International Calls)**

2 – Hazards Identification

Hazcom 2012/GHS Classification:
Flammable Aerosol Category 1
Gas Under Pressure: Compressed Gas
Aspiration Toxicity Category 1
Skin Irritant Category 2
Specific Target Organ Toxicity Single Exposure Category 3 (nervous system effects)

Note: This product is a consumer product and is labeled in accordance with the US Consumer Product Safety Commission regulations which take precedence over OSHA Hazard Communication labeling. The actual container label will not include the label elements below. The labeling below applies to industrial/professional products.

Label Elements:



DANGER!
Extremely Flammable Aerosol.
Contains gas under pressure; may explode if heated.
May be fatal if swallowed and enters airways.
Causes skin irritation.
May cause drowsiness or dizziness.

Prevention
Keep away from heat, sparks, open flames, hot surfaces – No smoking.
Do not spray on an open flame or other ignition source.
Pressurized container: Do not pierce or burn, even after use.
Avoid breathing vapors or mists.
Wash thoroughly with soap and water after handling.
Use only outdoors or in a well-ventilated area.
Wear protective gloves.
Response
IF SWALLOWED: Immediately call a POISON CENTER or physician. Do NOT induce vomiting.
IF ON SKIN: Wash with plenty of soap and water. If skin irritation occurs: Get medical attention. Take off contaminated clothing and wash before reuse.

IF INHALED: Remove to fresh air and keep at rest in a position comfortable for breathing. Call a POISON CENTER or physician if you feel unwell.

Storage

Store locked up.

Protect from sunlight. Do not expose to temperatures exceeding 50°C/122°F. Store in a well-ventilated place.

Disposal

Dispose of contents and container in accordance with local and national regulations.

3 - Composition/Information on Ingredients

Ingredient	CAS #	Weight Percent	US Hazcom 2012/ GHS Classification
Heptane	64742-49-0 142-82-5	70-80%	Aspiration Toxicity Category 1 Flammable Liquid Category 2 Skin Irritant Category 2 Specific Target Organ Toxicity Single Exposure Category 3 (nervous system effects)
Propane Propellant	74-98-6	10-20%	Flammable Gas Category 1 Gas Under Pressure, Compressed Gas
Petroleum Solvent	64741-66-8 64742-47-8	5-10%	Flammable Liquid, Category 2 Aspiration Toxicity Category 1
Mineral Oil	Proprietary	1-5%	Not Hazardous

Note: The exact percentages are a trade secret.

4 – First Aid Measures

Ingestion (Swallowed): Aspiration Hazard. DO NOT induce vomiting. Call physician, poison control center or the WD-40 Safety Hotline at 1-888-324-7596 immediately.

Eye Contact: Flush thoroughly with water. Remove contact lenses if present after the first 5 minutes and continue flushing for several more minutes. Get medical attention if irritation persists.

Skin Contact: Wash with soap and water. If irritation develops and persists, get medical attention.

Inhalation (Breathing): If irritation is experienced, move to fresh air. Get medical attention if irritation or other symptoms develop and persist.

Signs and Symptoms of Exposure: Harmful or fatal if swallowed. If swallowed, may be aspirated and cause lung damage. May cause eye and respiratory irritation. Inhalation may cause coughing, headache and dizziness. Skin contact may cause drying of the skin.

Indication of Immediate Medical Attention/Special Treatment Needed: Immediate medical attention is needed for ingestion.

5 – Fire Fighting Measures

Suitable (and unsuitable) Extinguishing Media: Use water fog, dry chemical, carbon dioxide or foam. Do not use water jet or flooding amounts of water. Burning product will float on the surface and spread fire.

Specific Hazards Arising from the Chemical: Contents under pressure. Extremely flammable aerosol. Extremely flammable liquid and vapor. Keep away from ignition sources and open flames. Exposure of containers to extreme heat and flames can cause them to rupture often with violent force. Vapors can cause a flash fire. Vapors are heavier than air and may travel along surfaces to remote ignition sources and flash back. Combustion will produce oxides of carbon, smoke fumes, unburned hydrocarbons and small amounts of hydrogen fluoride and carbonyl fluoride. A vapor and air mixture can create an explosion hazard in confined spaces.

Special Protective Equipment and Precautions for Fire-Fighters: Firefighters should always wear positive pressure self-contained breathing apparatus and full protective clothing. Cool fire-exposed containers with water. Use shielding to protect against bursting containers.

6 – Accidental Release Measures

Personal Precautions, Protective Equipment and Emergency Procedures: Wear appropriate protective clothing (see Section 8). Eliminate all sources of ignition and ventilate area.
Methods and Materials for Containment/Cleanup: Leaking cans should be placed in a plastic bag or open pail until the pressure has dissipated. Contain and collect liquid with an inert absorbent and place in a container for disposal. Clean spill area thoroughly. Report spills to authorities as required.

7 – Handling and Storage

Precautions for Safe Handling: Avoid contact with eyes. Avoid prolonged contact with skin. Avoid breathing vapors or aerosols. Use only with adequate ventilation. Keep away from heat, sparks, pilot lights, hot surfaces and open flames. Unplug electrical tools, motors and appliances before spraying or bringing the can near any source of electricity. Electricity can burn a hole in the can and cause contents to burst into flames. To avoid serious burn injury, do not let the can touch battery terminals, electrical connections on motors or appliances or any other source of electricity. Wash thoroughly with soap and water after handling. Keep containers closed when not in use. Keep out of the reach of children. Do not puncture, crush or incinerate containers, even when empty.
Conditions for Safe Storage: Store in a cool, well-ventilated area, away from incompatible materials Do not store above 120°F or in direct sunlight. U.F.C (NFPA 30B) Level 3 Aerosol. Store away from oxidizers.

8 – Exposure Controls/Personal Protection

Chemical	Occupational Exposure Limits
Heptane	500 ppm TWA OSHA PEL 400 ppm TWA, 500 ppm STEL ACGIH TLV
Propane Propellant	1000 ppm TWA OSHA PEL
Petroleum Solvent	1400 mg/m3 TWA Supplier Recommended (total hydrocarbon)
Mineral Oil	5 mg/m3 (inhalable) TWA 5 mg/m3 TWA OSHA PEL

The Following Controls are Recommended for Normal Consumer Use of this Product
Appropriate Engineering Controls: Use in a well-ventilated area.
Personal Protection:
Eye Protection: Avoid eye contact. Always spray away from your face.
Skin Protection: Avoid prolonged skin contact. Chemical resistant gloves recommended for operations where skin contact is likely.
Respiratory Protection: None needed for normal use with adequate ventilation.

For Bulk Processing or Workplace Use the Following Controls are Recommended
Appropriate Engineering Controls: Use adequate general and local exhaust ventilation to maintain exposure levels below that occupational exposure limits.
Personal Protection:
Eye Protection: Safety goggles recommended where eye contact is possible.
Skin Protection: Wear chemical resistant gloves.
Respiratory Protection: None required if ventilation is adequate. If the occupational exposure limits are exceeded, wear a NIOSH approved respirator. Respirator selection and use should be based on contaminant type, form and concentration. Follow OSHA 1910.134, ANSI Z88.2 and good Industrial Hygiene practice.
Work/Hygiene Practices: Wash with soap and water after handling.

9 – Physical and Chemical Properties

Appearance:	Clear liquid	Flammable Limits:	LEL: 0.9% UEL: 9.5%
Odor:	Pleasant odor	Vapor Pressure:	40-50 psi @ 70°F

Odor Threshold:	Not established	Vapor Density:	Greater than 1 (air=1)
pH:	Not Applicable	Relative Density:	0.72
Melting/Freezing Point	Not established	Solubilities:	Insoluble in water
Boiling Point/Range:	90-140°C (194-284°F)	Partition Coefficient; n-octanol/water:	Not established
Flash Point:	<-29.2°F Tag Closed Cup	Autoignition Temperature:	Not established
Evaporation Rate:	Not established	Decomposition Temperature:	Not established
Flammability (solid, gas)	Flammable Aerosol	Viscosity:	Not established
VOC:	93.2%	Pour Point:	Not established

10 – Stability and Reactivity

Reactivity: Not reactive under normal conditions
Chemical Stability: Stable
Possibility of Hazardous Reactions: May react with strong oxidizers generating heat.
Conditions to Avoid: Avoid heat, sparks, flames and other sources of ignition. Do not puncture or incinerate containers.
Incompatible Materials: Strong oxidizing agents.
Hazardous Decomposition Products: Carbon monoxide and carbon dioxide, smoke fumes, unburned hydrocarbons and small amounts of hydrogen fluoride and carbonyl fluoride.

11 – Toxicological Information

Symptoms of Overexposure:
Inhalation: Mist or vapor can irritate the throat and lungs. High concentrations may cause nasal and respiratory irritation and central nervous system effects such as headache, dizziness and nausea. Intentional abuse may be harmful or fatal.
Skin Contact: May cause skin irritation with short-term exposure with redness, itching and burning of the skin. Prolonged and/or repeated contact may produce defatting and possible dermatitis.
Eye Contact: Contact may be irritating to eyes. May cause redness, stinging, swelling and tearing.
Ingestion: This product has low oral toxicity. If swallowed, this material may cause irritation of the mouth, throat and esophagus. Swallowing may cause gastrointestinal irritation, nausea, vomiting, diarrhea, dizziness, drowsiness and other central nervous system effects. This product is an aspiration hazard. If swallowed, can enter the lungs and may cause chemical pneumonitis, severe lung damage and death.
Chronic Effects: Prolonged or repeated skin contact may defeat the skin resulting in irritation and dermatitis.
Carcinogen Status: None of the components are listed as a carcinogen or suspect carcinogen by IARC, NTP, ACGIH or OSHA.
Reproductive Toxicity: None of the components is considered a reproductive hazard.

Numerical Measures of Toxicity:
The oral toxicity of this product is estimated to be greater than 2,000 mg/kg and the dermal toxicity greater than 2,000 mg/kg based on an assessment of the ingredients. This product is not classified as toxic by established criteria. It is an aspiration hazard.

12 – Ecological Information

Ecotoxicity: Heptane: 24 hr LC50 Goldfish – 4 mg/L; 24 hr EC50 Daphnia magna – >10 mg/L
Petroleum Solvent: No ecotoxicity data available. Ingredient is expected to be toxic to the aquatic environment with long-term adverse effects.
Persistence and Degradability: Component are not readily biodegradable.
Bioaccumulative Potential: Bioaccumulation is not expected based on an assessment of the ingredients.
Mobility in Soil: No data available
Other Adverse Effects: None known

13 - Disposal Considerations

If this product becomes a waste, it would be expected to meet the criteria of a RCRA ignitable hazardous waste (D001). However, it is the responsibility of the generator to determine at the time of disposal the proper classification and method of disposal. Do not puncture or incinerate containers, even empty. Dispose in accordance with federal, state, and local regulations.

14 – Transportation Information_

DOT Surface Shipping Description:
UN1950, Aerosols, 2.1 Ltd. Qty (Note: Shipping Papers are not required for Limited Quantities unless transported by air or vessel – each package must be marked with the Limited Quantity Mark)
IMDG Shipping Description: Un1950, Aerosols, 2.1, LTD QTY Marine Pollutant (Heptane)
ICAO Shipping Description: UN1950, Aerosols, flammable, 2.1 NOTE: WD-40 does not test aerosol cans to assure that they meet the pressure and other requirements for transport by air. We do not recommend that our aerosol products be transported by air.

15 – Regulatory Information

CERCLA 103 Reportable Quantity: This product is not subject to CERCLA reporting requirements, however, oil spills are reportable to the National Response Center under the Clean Water Act and many states have more stringent release reporting requirements. Report spills required under federal, state and local regulations.
SARA TITLE III:
Hazard Category For Section 311/312: Acute Health, Fire Hazard, Sudden Release of Pressure
Section 313 Toxic Chemicals: This product contains the following chemicals subject to SARA Title III Section 313 Reporting requirements: None
Section 302 Extremely Hazardous Substances (TPQ): None
EPA Toxic Substances Control Act (TSCA) Status: All of the components of this product are listed on the TSCA inventory
VOC Regulations: This product complies with the consumer product VOC limits of CARB, the US EPA and states adopting the OTC VOC rules.
California Safe Drinking Water and Toxic Enforcement Act (Proposition 65): This product does not contain chemicals regulated under California Proposition 65.
Canadian Environmental Protection Act: All of the ingredients are listed on the Canadian Domestic Substances List or exempt from notification
Canadian WHMIS Classification: Class A (Compressed Gas), Class B-5 (Flammable Aerosol), Class D-2-B (Toxic material causing other toxic effects)
This MSDS has been prepared according to the criteria of the Controlled Products Regulation (CPR) and the MSDS contains all of the information required by the CPR.

16 – Other Information:

HMIS Hazard Rating:
Health – 1 (slight hazard), Fire Hazard – 4 (severe hazard), Physical Hazard – 0 (minimal hazard)

Revision Date: July 13, 2014 Supersedes: September 2012

Revision Summary: Convert to Hazcom 2012. Changes in all sections.

Prepared by: Industrial Health & Safety Consultants, Inc. Shelton, CT, USA

APPROVED BY: I.Kowalski Regulatory Affairs Dept.

2095100/No.0049703

EQUIPMENT CUTSHEETS

AHUS, VAV BOXES, BOILERS,

AND OTHER MECHANICAL EQUIPMENT

©2013 Energy Systems Group, LLC

TCS Series Fan-Powered, VAV Terminals



Johnson Controls

Model TCS construction features



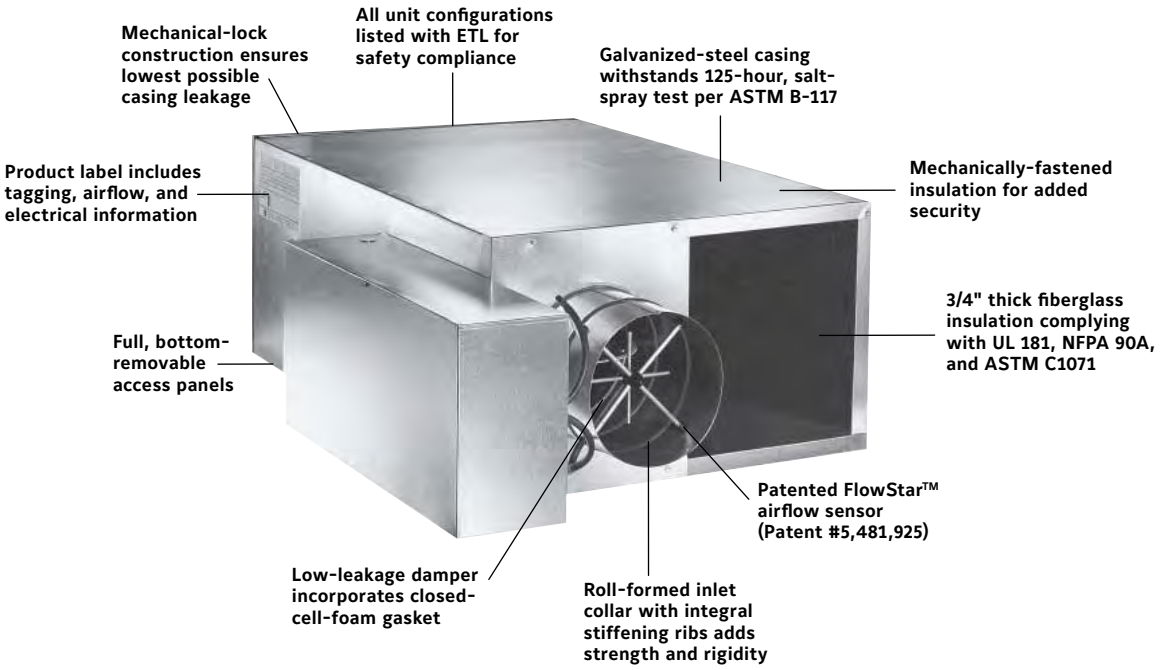

TCS Fan-Powered, VAV Terminals: Quiet operation, constant airflow

Owners
TCS terminals are specifically designed for quiet operation. They also offer improved space comfort and flexibility for a wide variety of heating, ventilating and air-conditioning (HVAC) systems. This is critical in today's buildings where occupants are placing more emphasis on indoor acoustics.

Occupants benefit from a TCS design that minimizes low-frequency (125-250 Hz) sound levels that typically dominate the space sound level.

Superior flow-measuring allows control at lower minimum cubic-feet-per-minute (CFM) values, which reduces energy costs and sound levels while maintaining comfort in the occupied space.

Designers
Due to heightened interest in indoor air quality, many HVAC system designers are focusing on the effects of particulate contamination within a building's occupied space. Often, HVAC system noise is overlooked as a source of occupied-space contamination. The TCS terminal is specifically designed to eliminate obtrusive fan noise from reaching the occupants, while providing constant air motion in the space.

The TCS terminal is manufactured and assembled with a multi-axis, multi-point, center-averaging, airflow sensor. This sensor provides a signal to the controller enabling it to quietly and precisely measure airflow.

TCS terminals can be used in these types of applications:

- Series Fan, Cooling Only
- Series Fan with Reheat

Model TCS-E EH offers electric heat (available with Electronically Commutated Motor (ECM)), and model TCS-WC offers hot-water heat.

Contractors
An integrated VAV box with direct-digital controls eliminates the coordination and difficulties associated with field-mounting.

Bundled with the TCS terminal is a digital controller from the VAV Modular Assembly (VMA) Series or the LN Series, combining a controller, pressure sensor, and actuator housed in one pre-assembled unit. Features include automated commissioning, damper-stall detection, starved-box detection, actuator motor duty cycle, VAV box-flow test, and other diagnostics on most models.



VMA Series Controller (left) and LN Series Controller (right)

Downloading of software, setting of parameters, addressing, and testing at the factory reduce startup time and lessen risk.

Installation is simple with low-profile, compact design, and standard metal hanging straps.

Complies with National Electric Code (NEC) wiring requirements and meets Air-Conditioning and Refrigeration Institute (ARI) Standard 880.

Model TCS

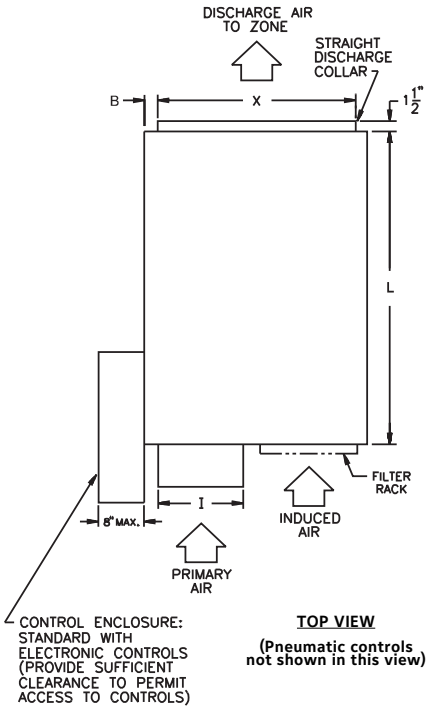

TOP VIEW

(Pneumatic controls not shown in this view)

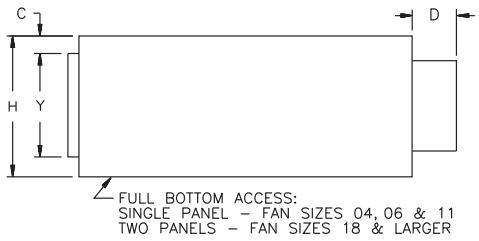

LEFT SIDE VIEW

(Control enclosure and filter rack not shown in this view)

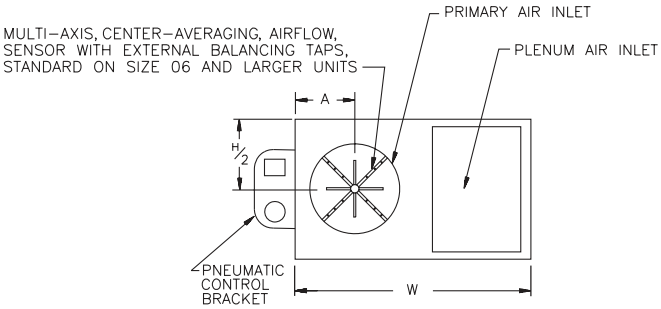

INLET END VIEW

(Electronic controls and filter rack not shown in this view)

Unit Size	Dimensions									
	I	A	B	C	D	X	Y	W	H	L
0404	3-7/8" [98]	6" [152]	5" [127]	3/4" [19]	10-1/2" [267]	8-3/8" [213]	8" [203]	18" [457]	12" [305]	28" [711]
0504	4-7/8" [124]	6" [152]	5" [127]	3/4" [19]	10-1/2" [267]	8-3/8" [213]	8" [203]	18" [457]	12" [305]	28" [711]
0604	5-7/8" [149]	6" [152]	5" [127]	3/4" [19]	6-1/2" [165]	8-3/8" [213]	8" [203]	18" [457]	12" [305]	28" [711]
0506	4-7/8" [124]	6" [152]	2-1/4" [57]	3/4" [19]	10-1/2" [267]	11" [279]	11" [279]	23-3/8" [594]	14" [356]	35" [889]
0606	5-7/8" [149]	6" [152]	2-1/4" [57]	3/4" [19]	6-1/2" [165]	11" [279]	11" [279]	23-3/8" [594]	14" [356]	35" [889]
0806	7-7/8" [251]	6" [152]	2-1/4" [57]	3/4" [19]	6-1/2" [165]	11" [279]	11" [279]	23-3/8" [594]	14" [356]	35" [889]
0611	5-7/8" [149]	6" [152]	2-1/4" [57]	3/4" [19]	6-1/2" [165]	11" [279]	11" [279]	23-3/8" [594]	14" [356]	35" [889]
0811	7-7/8" [200]	6" [152]	2-1/4" [57]	3/4" [19]	6-1/2" [165]	11" [279]	11" [279]	23-3/8" [594]	14" [356]	35" [889]
1011	9-7/8" [251]	7" [178]	2-1/4" [57]	3/4" [19]	6-1/2" [165]	11" [279]	11" [279]	23-3/8" [594]	14" [356]	35" [889]
0818	7-7/8" [200]	8" [203]	2-1/4" [57]	3/4" [19]	6-1/2" [165]	15" [381]	13-1/2" [343]	29-3/8" [746]	17" [432]	40" [1016]
1018	9-7/8" [251]	8" [203]	2-1/4" [57]	3/4" [19]	6-1/2" [165]	15" [381]	13-1/2" [343]	29-3/8" [746]	17" [432]	40" [1016]
1218	11-7/8" [302]	8" [203]	2-1/4" [57]	3/4" [19]	6-1/2" [165]	15" [381]	13-1/2" [343]	29-3/8" [746]	17" [432]	40" [1016]
1021	9-7/8" [251]	8" [203]	2-1/4" [57]	3/4" [19]	6-1/2" [165]	15" [381]	13-1/2" [343]	29-3/8" [746]	17" [432]	40" [1016]
1221	11-7/8" [302]	8" [203]	2-1/4" [57]	3/4" [19]	6-1/2" [165]	15" [381]	13-1/2" [343]	29-3/8" [746]	17" [432]	40" [1016]
1421	13-7/8" [352]	9" [229]	2-1/4" [57]	3/4" [19]	6-1/2" [165]	15" [381]	13-1/2" [343]	29-3/8" [746]	17" [432]	40" [1016]
1224	11-7/8" [302]	10" [254]	2-1/4" [57]	3/4" [19]	6-1/2" [165]	28" [711]	15" [381]	38" [965]	19" [483]	54" [1372]
1424	13-7/8" [352]	10" [254]	2-1/4" [57]	3/4" [19]	6-1/2" [165]	28" [711]	15" [381]	38" [965]	19" [483]	54" [1372]
1230	11-7/8" [302]	10" [254]	9-3/4" [248]	1-1/4" [32]	6-1/2" [165]	40" [1016]	15" [381]	52" [1321]	19" [483]	62" [1575]
1430	13-7/8" [352]	11-1/2" [292]	9-3/4" [248]	1-1/4" [32]	6-1/2" [165]	40" [1016]	15" [381]	52" [1321]	19" [483]	62" [1575]
1630	15-7/8" [352]	11-1/2" [292]	9-3/4" [248]	1-1/4" [32]	6-1/2" [165]	40" [1016]	15" [381]	52" [1321]	19" [483]	62" [1575]
1440	13-7/8" [403]	11-1/2" [292]	9-3/4" [248]	1-1/4" [32]	6-1/2" [165]	40" [1016]	15" [381]	52" [1321]	19" [483]	62" [1575]
1640	15-7/8" [352]	11-1/2" [292]	9-3/4" [248]	1-1/4" [32]	6-1/2" [165]	40" [1016]	15" [381]	52" [1321]	19" [483]	62" [1575]
1644	15-7/8" [352]	11-1/2" [292]	9-3/4" [248]	3-1/4" [83]	6-1/2" [165]	40" [1016]	15" [381]	52" [1321]	19" [483]	62" [1575]
1844	15-7/8" [352] x 15-7/8" [352]	11-1/2" [292]	9-3/4" [248]	3-1/4" [83]	6-1/2" [165]	40" [1016]	15" [381]	52" [1321]	19" [483]	62" [1575]

NOTE:
1. All dimensions are in inches [mm] with a tolerance of ±1/8" [3mm].

NOTE: Drawings are not to scale and are not for installation purposes. Contact your Johnson Controls representative for more information.
All data and dimensions are subject to change without notice.

Model TCS-WC
(Hot-Water Coil)

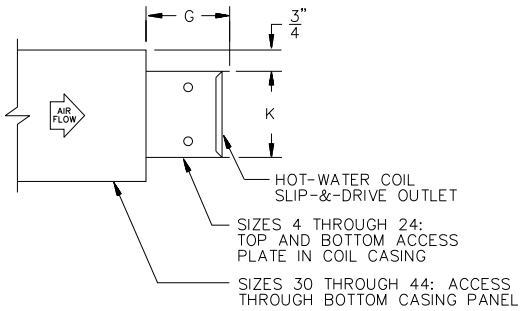

RIGHT SIDE VIEW

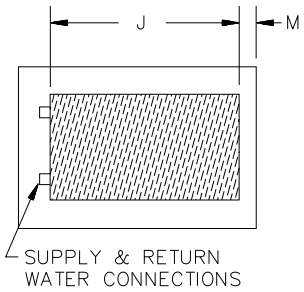

DISCHARGE END VIEW

Fan Size	G	J	K	M
04	10" [254]	12" [305]	10" [254]	3" [76]
06, 11	10" [254]	16" [406]	12-1/2" [318]	1/2" [13]
18, 21	10" [254]	22" [559]	12-1/2" [318]	1/2" [13]
24	10" [254]	28" [711]	17-1/2" [445]	1/2" [13]
30, 40	6" [152]	40" [1016]	17-1/2" [445]	9-3/4" [248]
44	6" [152]	44" [1118]	17-1/2" [445]	5-3/4" [146]

Model TCS-EH
(Electric Heat)

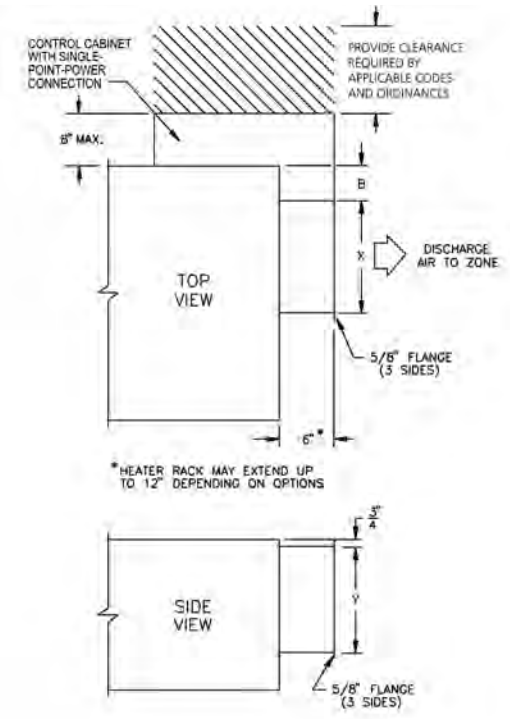

FAN SIZES 04, 06, 11, 18, 21 AND 24

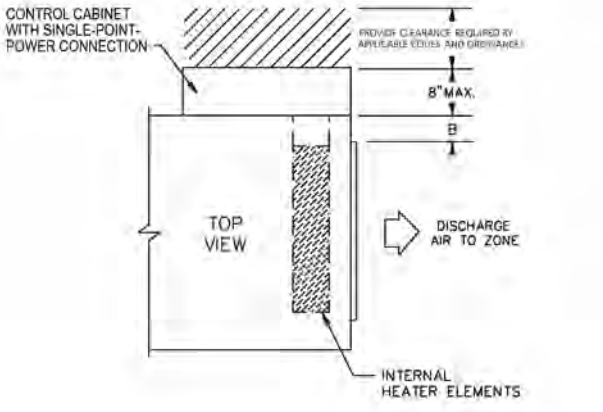

FAN SIZES 30, 40 AND 44

TCS Terminal Features

STANDARD FEATURES:

Construction
- ARI Standard 880-certified and labeled
- 22-gauge, galvanized-steel casing and valve
- 3/4" thick, fiberglass insulation, mechanically fastened for added security

Hot-Water Coils
- ARI Standard 410-certified and labeled
- 1, 2, 3, 4-row coils
- Tested at a minimum of 350 psig under water

Fan Assemblies
- Forward-curved, dynamically-balanced, direct-drive, galvanized blower wheel
- 115 to 277-volt, single-phase, three-tap, permanent-split-capacitor (PSC) motor
- SCR fan-speed controller
- Quick-select, motor-speed terminal
- Permanently lubricated motor bearings
- Thermally protected motor
- Vibration-isolation motor mounts
- Single-point wiring

Primary Air Valve
- Embossed rigidity rings
- Low-thermal-conductance damper shaft with position indicator
- Mechanical stops for open and closed position
- Multi-point, center-averaging, airflow sensor
- Balancing tees
- Plenum-rated sensor tubing

Electrical Components
- cETL listed for safety compliance with UL 1996 inin
- National Electrical Manufacturers Association (NEMA) Type 1 wiring enclosure

Electric Heat
- cETL listed as an assembly for safety compliance
- Integral, electric-heat assembly
- Automatic-reset primary and back-up secondary thermal limits
- Single-point-power connection
- Hinged, electrical-enclosure door
- Fusing per NEC
- Ni-chrome elements
- Wiring diagram and ETL label
- Fan-interlock device (relay or pneumatic-electric [PE] switch)

OPTIONAL FEATURES:

Construction
- 20-gauge, galvanized-steel construction
- 1" insulation
- Scrim-reinforced, foil-faced insulation meeting American Society for Testing and Materials (ASTM) C1136 for mold, mildew, and humidity resistance
- Double-wall construction with 22-gauge liner
- Mounting brackets to accept all threaded hanging rods or wire hangers
- Low-temperature construction for use in thermal-storage applications, including a thermally-isolated, primary air inlet and a composite damper shaft
- Low-velocity, low-pressure-drop, filter rack and filters located at induction inlet and/or radiated sound damper
- Hot-water, steam, or electric heating coils mounted at unit discharge—access plate upstream of hydronic coil (standard)

Fan Assemblies
- 208, 230, 240 and 480-volt, single-phase, PSC motors
- 220/240-volt, 50 Hz motors
- 120, 208, 240, and 277-volt ECM™ motors

Electrical Components
- Full-unit, toggle disconnect and inline motor fusing
- Primary and secondary transformer fusing

Electric Heat
- Proportional, solid-state-relay (SSR) heater control
- Door-interlocking disconnect switches
- Disconnect (toggle or door-interlocking)
- Pneumatic-electric (PE) switches
- Mercury or magnetic contactors
- Manual-reset secondary limit
- Airflow switch

Controls
- Factory-provided controls include:
  - Direct-digital controls (DDC) for BACnet, N2, or LON® networks
  - Pneumatic controls
  - Analog electronic controls
- Consignment DDC controls (factory-mount and wire controls provided by others)

Printed on recycled paper.

PUBL-5526 (908)
© 2008 Johnson Controls, Inc. P.O. Box 423, Milwaukee, WI 53201 Printed in USA
www.johnsoncontrols.com

Johnson Controls

88™ Series 2 Commercial Boiler
Weil-McLain®

Gas, Oil & Gas/Oil
Water or Steam
MBH: 996-5,845
Combustion Eff.: Up to 87.5%

88™
SERIES 2 BOILER

- Up to 85.7% Thermal Efficiency
- Water or Steam
- Gas, Oil or Gas/Oil
- Complies to LEED
- Packaged or Knock-down



WEIL-McLAIN®
www.weil-mclain.com

MADE IN THE USA

Low resolution PDF please do not print



NEW Jacket design:

- Modular jacketing and toolless jacket panels for easy access
- 3 inches of insulation to minimize jacket losses, maximizing thermal efficiencies
- Modular side panels for ease of assembly
- High temperature site glass grommets
- Part number labels on all components for easy assembly

NEW Efficiencies!

- 85.7% Thermal Efficiencies (see ratings)
- HXT-bars optimize heat transfer



NEW clean-out plates:

- ¼ inch thick solid steel plates
- Coated Woven Fiberglass reusable gasket
- Reusable - cleaning after cleaning

Backwards Compatible:

- Can use up to 50% Series 2 iron on a Series 1 block without consulting Weil-McLain® – no need to stock both!

Standard Equipment

All Boilers:

- ASME 80 PSI rated cast iron sections
- Insulated steel jacket
- Power burner for light oil, gas or gas/light oil (except H-XX88)
- Burner mounting plate with refractory (except H-XX88)
- Cast iron flue collar with built-in breaching damper
- Observation ports on front and back sections
- Cleanout plates with reusable gaskets
- Flue brush
- HXT-bars
- 3 inches of insulation (except front panel)

Water Boilers

- 30 PSI ASME relief valve
- Combination high limit and low limit with manual reset control
- Combination pressure/temperature gauge
- Nipple and 5" x 6" reducing coupling (1288 – 1888 boilers only)
- Built-in air eliminator

Steam Boilers

- 15 PSI ASME safety valve side outlet
- Low limit and high limit pressure controls
- Steam pressure gauge siphon
- Gauge cocks, glass and guards

Optional Equipment

- Factory assembled sections
- Burner mounting plate with refractory for "H" units
- Intermediates with tankless heater opening
- Tankless heaters for domestic hot water (water or steam boilers)
- Tankless heater opening cover plates
- Low water cutoffs
- Barometric dampers
- Side inspection tappings with plugs – 2 per section
- Dual-range manometer
- Optional burners and burner controls

Low resolution PDF please do not print

Ratings

Model	I=B=R			I=B=R Net Rating				Flue Outlet (Dia)	Combustion Efficiency		Thermal Efficiency	
	Oil Input GPH	Gas Input MBH	Gross Output MBH	Steam MBH	Steam Sq. Ft.	Water MBH	Boiler H.P.		OIL	GAS	OIL	GAS
488R®	6.9	996	827	620	2,583	719	24.7	10 in.	87.5	84.8	85.6	83.1
488®	7.0	1,010	839	629	2,621	730	25.1	10 in.	87.5	84.8	85.6	83.1
588®	9.4	1,356	1,126	845	3,521	979	33.6	10 in.	87.0	84.4	85.6	83.1
688®	11.8	1,701	1,413	1,072	4,469	1,229	42.2	10 in.	86.7	84.1	85.6	83.1
788®	14.2	2,046	1,700	1,311	5,463	1,478	50.8	12 in.	86.5	83.9	85.6	83.1
888®	16.6	2,382	1,987	1,543	6,427	1,728	59.4	12 in.	86.3	83.7	85.6	83.1
988R®	17.2	2,482	2,062	1,601	6,671	1,793	61.6	14 in.	86.2	83.7	85.6	83.1
988®	18.8	2,737	2,274	1,766	7,358	1,977	67.9	14 in.	86.2	83.7	85.6	83.1
1088R®	20.0	2,887	2,399	1,863	7,763	2,086	71.7	14 in.	86.2	83.6	85.6	83.1
1088®	21.5	3,082	2,561	1,988	8,283	2,227	76.5	14 in.	86.2	83.6	85.6	83.1
1188®	23.5	3,428	2,848	2,211	9,213	2,477	85.1	14 in.	86.1	83.5	85.7	83.1
1288®	26.0	3,773	3,135	2,434	10,147	2,726	93.7	14 in.	86.0	83.5	85.7	83.1
1388®	28.5	4,119	3,422	2,657	11,071	2,976	102.2	14 in.	86.0	84.4	85.7	83.1
1488®	31.0	4,464	3,709	2,880	12,000	3,225	110.8	16 in.	86.0	83.4	85.7	83.1
1588	33.0	4,809	3,996	3,102	12,925	3,475	119.4	16 in.	85.9	83.3	85.7	83.1
1688R	34.5	4,979	4,137	3,212	13,383	3,597	123.6	16 in.	85.9	83.3	85.7	83.1
1688®	35.5	5,155	4,283	3,325	13,854	3,724	127.9	16 in.	85.9	83.3	85.7	83.1
1788®	38.0	5,494	4,570	3,548	14,783	3,974	136.5	18 in.*	85.9	83.3	85.7	83.1
1888®	40.5	5,845	4,857	3,771	15,713	4,123	145.1	18 in.*	85.9	83.3	85.7	83.1

- Burner input based on maximum of 2,000 ft. altitude - for higher altitudes consult Weil-McLain® representative.
- No.2 Fuel oil - Commercial Standard Spec. CS75-56. Heat value of oil - 140,000 BTU/G.
- Stack gas volume at outlet temperature
- With 0.10" WC positive pressure at flue collar.
- Consult Burner Specification Sheets for gas pressure required.
- Gross I=B=R ratings have been determined under the I=B=R provision governing forced draft boiler-burner units
- Net I-B-Rratings are based on net installed radiation of sufficient quantity for the requirements of the building and nothing need be added for normal piping and pick-up. Water ratings are based on a piping and pick-up allowance of 1.15. Steam ratings are based on the following allowances: 488 and 588 - 1.333; 688 - 1.323; 788 - 1.300; 888 - 1.289; and 988 through 1888 - 1.288. An additional allowance should be made for gravity hot water systems or for unusual piping and pick-up loads. Consult Weil-McLain® representative.
- *Flue collar connection is oval, 16 1/8" x 19 7/8"



Low resolution PDF please do not print

Dimensions (inches)

Model	A	B	C	D	E	L	W	H
488®	23	–	–	10	54 ¾	34 ⅜	30	23 ⅛
588®	31	–	–	10	54 ¾	42 ⅜	38	31 ⅛
688®	39	–	–	10	54 ¾	50 ⅜	46	39 ⅛
788®	47	–	–	12	53 ¾	58 ⅜	54	47 ⅛
888®	55	–	–	12	53 ¾	66 ⅜	62	55 ⅛
988®	63	–	–	14	52 ¾	74 ⅜	70	63 ⅛
1088®	71	–	–	14	52 ¾	82 ⅜	78	71 ⅛
1188®	79	–	–	14	52 ¾	90 ⅜	86	79 ⅛
1288®	87	39 ½	–	14	52 ¾	98 ⅜	94	87 ⅛
1388®	95	47 ½	–	14	52 ¾	106 ⅜	102	95 ⅛
1488®	103	55 ½	–	16	51 ¾	114 ⅜	110	103 ⅛
1588®	111	63 ½	–	16	51 ¾	122 ⅜	118	111 ⅛
1688®	119	47 ½	–	16	51 ¾	130 ⅜	126	119 ⅛
1788®	127	31 ½	79 ½	18†	51 ¾	138 ⅜	134	127 ⅛
1888®	135	39 ½	87 ½	18†	51 ¾	146 ⅜	142	135 ⅛

†For 18" diameter breaching, flue collar is oval (19 1/8 x 16 1/8")

Model	Supply & return tappings: Supply tappings (No. & size)* Steam	Supply & return tappings: Supply tappings (No. & size)* Water	Supply & return tappings: Return tappings (No. & size)* Steam	Supply & return tappings: Return tappings (No. & size)* Water	Dimension F
488R®	2 – 5"	2 – 5"	1 – 6"	1 – 6"	
488®	2 – 5"	2 – 5"	1 – 6"	1 – 6"	
588®	2 – 5"	2 – 5"	1 – 6"	1 – 6"	
688®	2 – 5"	2 – 5"	1 – 6"	1 – 6"	
788®	2 – 5"	2 – 5"	1 – 6"	1 – 6"	
888®	2 – 5"	2 – 5"	1 – 6"	1 – 6"	
988R®	2 – 5"	2 – 5"	1 – 6"	1 – 6"	
988®	2 – 5"	2 – 5"	1 – 6"	1 – 6"	
1088R®	2 – 5"	2 – 5"	1 – 6"	1 – 6"	
1088®	2 – 5"	2 – 5"	1 – 6"	1 – 6"	
1188®	2 – 5"	2 – 5"	1 – 6"	1 – 6"	
1288®	3 – 5"	2 – 5"	1 – 6"	1 – 6"	
1388®	3 – 5"	2 – 5"	1 – 6"	1 – 6"	
1488®	3 – 5"	2 – 5"	1 – 6"	1 – 6"	
1588®	3 – 5"	2 – 5"	1 – 6"	1 – 6"	
1688R®	3 – 5"	2 – 5"	1 – 6"	1 – 6"	
1688®	3 – 5"	2 – 5"	1 – 6"	1 – 6"	
1788®	4 – 5"	2 – 5"	1 – 6"	1 – 6"	
1888®	4 – 5"	2 – 5"	1 – 6"	1 – 6"	

*Use recommended piping connections.
†For 18" diameter breaching, flue collar is oval (19 1/8 x 16 1/8")

See Burner Specification & Data Sheets

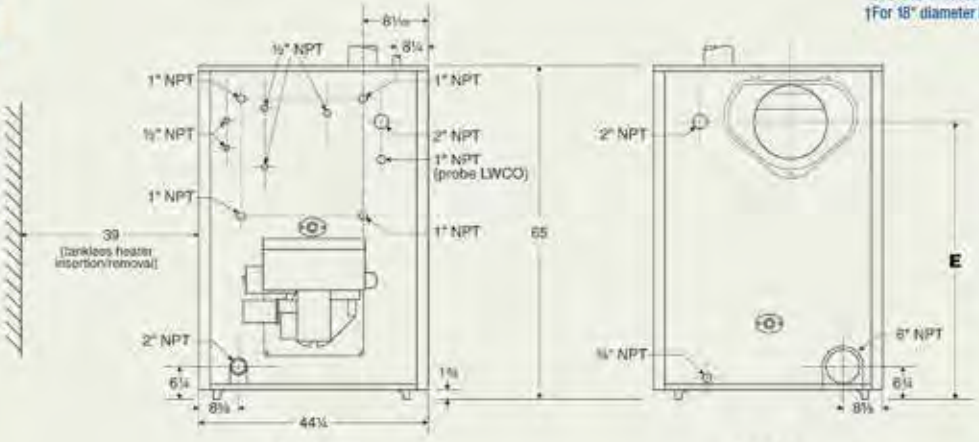

FRONT REAR

Model	I=B=R Vent or Liner Dia (in) Forced Draft	I=B=R Vent or Liner Dia (in) Balanced Draft	Boiler Flue Collar Dimensions (in)
488®	10	12	10 round
588®	10	15	10 round
688®	12	15	10 round
788®	12	18	12 round
888®	14	18	12 round
988®	14	18	14 round
1088®	14	21	14 round
1188®	16	21	14 round
1288®	16	21	14 round
1388®	16	24	14 round
1488®	18	24	16 round
1588®	18	24	16 round
1688®	18	24	16 round
1788®	18	24	16 1/8 x 19 7/8 oval
1888®	20	27	16 1/8 x 19 7/8 oval

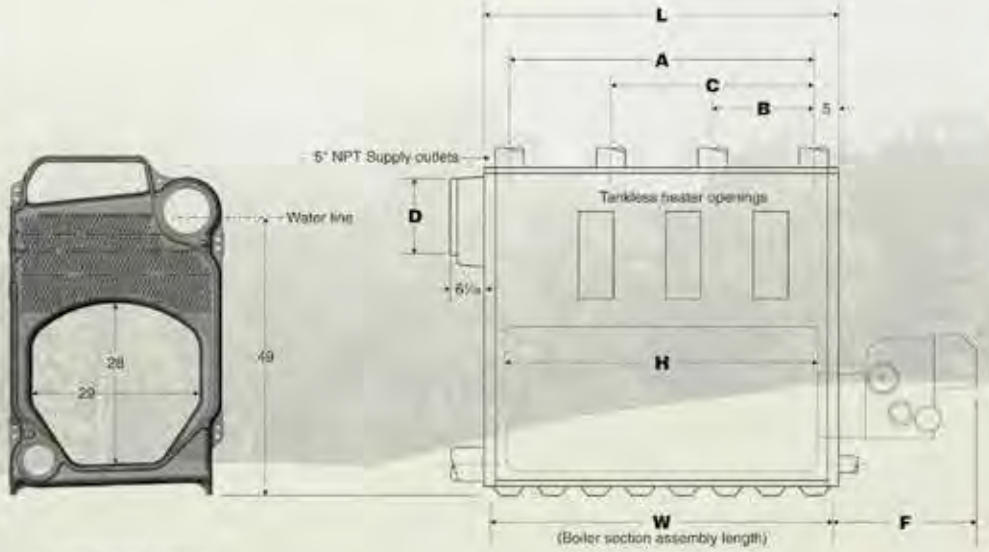

INTERMEDIATE SECTION LEFT SIDE



Model 88 Est. 1985

Low resolution PDF please do not print

SEMCO
A FläktGroup Brand

AIR COMFORT
AIR TREATMENT
ENERGY SAVINGS

EP SERIES

PACKAGED ENERGY RECOVERY SYSTEM







Certified total energy recovery performance (sensible and latent) up to 90% efficient.

Double-wall panel construction eliminates exposed insulation and associated risk of bacterial growth.

Airflow capacity ranges from 2,000 scfm to 70,000 scfm

e³ ENVIRONMENT ECONOMICAL EXPERTISE

The SEMCO EP packaged energy recovery system offers the ultimate performance in the transfer of total energy (both latent and sensible). Pre-engineered and factory assembled, the EP system also provides the air handling capability for the building's exhaust and supply air. The system can be selected to precondition outdoor air going to other conventional air handling systems or as an integrated system that provides total space conditioning with the additional heating and cooling options available.

The heart of this system is a technologically advanced True 3Å desiccant wheel. In addition to providing superior performance, the wheel's 3Å molecular sieve-desiccant coating is selective in what it adsorbs from an exhaust airstream. The desiccant rejects airborne contaminants while it transfers water vapor, thus providing total energy transfer from the exhaust to the



THE EP SYSTEM: ULTIMATE PERFORMANCE IN TRANSFER OF TOTAL ENERGY

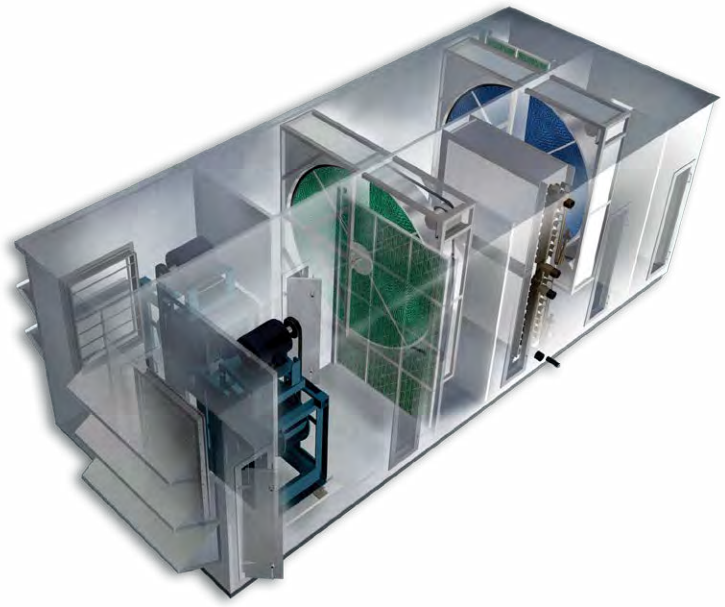

supply airstream. Selectivity allows True 3Å to be used in critical applications, including recovery from contaminated airstreams. In the past, energy recovery was avoided or limited to sensible-only energy exchange in applications like these.

The True 3Å wheel uses a fluted media with an aluminum substrate, which is coated with a fast-acting, adsorbent desiccant surface. As the transfer media slowly rotates between the outdoor and exhaust airstreams, the warmer air surrenders its sensible energy to the aluminum. This energy is then shifted to the cooler airstream during the second half of the revolution.

Just as the temperature is captured and released, so is the moisture. The True 3Å molecular sieve-desiccant coating has an enormous internal surface area and strong attraction to water vapor. Since the opposing airstreams have different temperatures and moisture contents, the vapor pressure will also be different. This pressure difference is the driving force in the transferring of latent energy.

By using the desiccant coating, the True 3Å wheel recovers the moisture from the exhaust airstream to the supply airstream without the airborne pollutants exchanging. This very important and unique feature has been well documented through independent laboratory and field testing. (A copy of the Georgia Tech Research Institute study is available free of charge.)

HOW IT WORKS
COOLING SEASON AND HEATING SEASON

EP: COOLING SEASON

1: Hot, humid outside air is drawn in.

2: Fresh air is blown in through the slowly rotating True 3Å wheel. The desiccant-coated fluted media captures heat and moisture from the supply side and transfers it to the exhaust side.

3: The air can be further cooled or heated to space neutral conditions.

4: The cooled and dehumidified air enters the HVAC system or is delivered directly to the occupied space.

5: Cool, dry return air that is exhausted from the building enters the EP Total Energy Recovery System.

6: As return air passes through the True 3Å wheel, it removes the heat and humidity captured by the wheel from the fresh air stream.

7: Warm, humidified exhaust air is blown out.

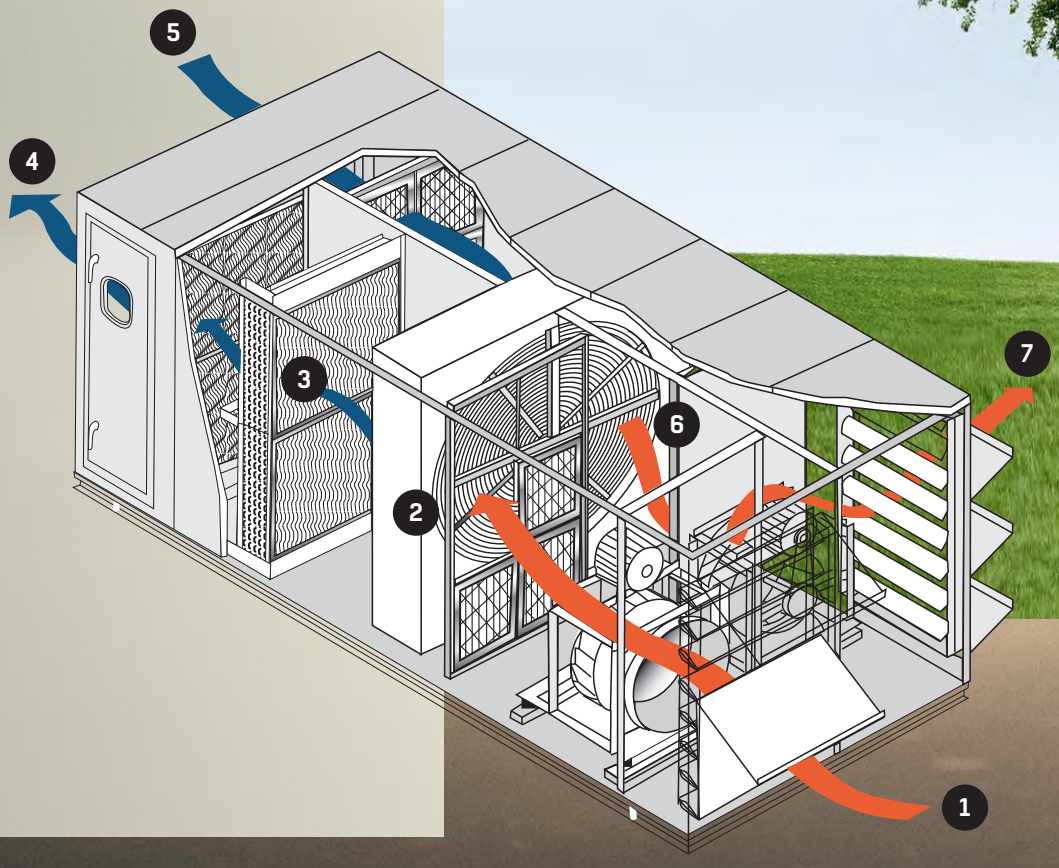

EP: HEATING SEASON

1: Cold, dry outside air is drawn in.

2: Fresh air is blown in through the slowly rotating True 3Å wheel. The desiccant-coated fluted media captures heat and moisture from the exhaust air and transfers it to the supply side.

3: The air can be further cooled or heated to space neutral conditions.

4: The warmed and humidified air enters the HVAC system or is delivered directly to the occupied space.

5: Warm, humid return air that is exhausted from the building enters the EP Total Energy Recovery System.

6: As return air passes through the True 3Å wheel, it captures the heat and moisture to be transfered back to the supply air.

7: Cool, dry exhaust air is blown out.

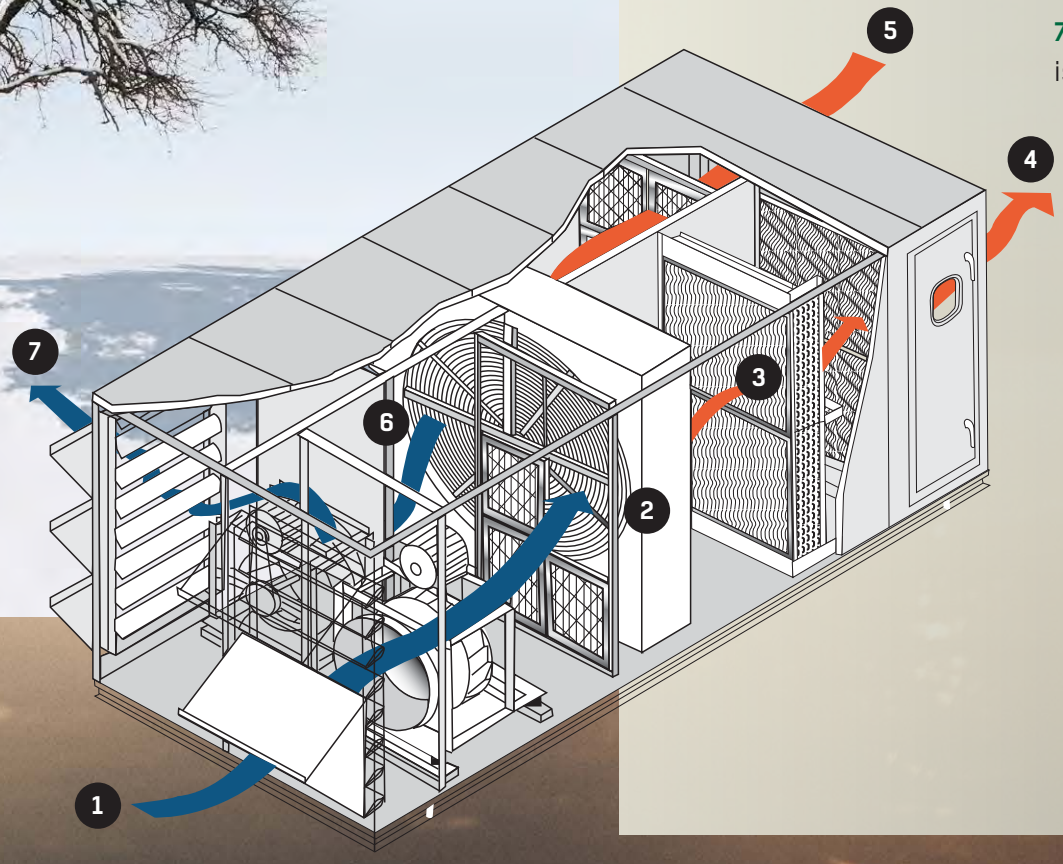



FEATURES & BENEFITS

EFFICIENCY STANDARD WITH OPTIONAL UPGRADES

true 3Å™
PATENTED PERFORMANCE

The True 3Å Total Energy Wheel

- Certified total energy recovery performance (sensible and latent) up to 90% efficient
- Patented 3Å molecular sieve-desiccant coating to avoid desiccant cross-contamination (see below)*
- Wheel faces are coated to ensure long lasting corrosion protection
- Sensible-only wheel is polymer coated to avoid oxidation and future transferring of moisture
- All aluminum, structural spoke system eliminates mechanical fatigue and allows media replacement (sizes 13 and up)
- Non-wearing labyrinth seals (sizes 13 and up)

*SEMCO pioneered an application of a 3 angstrom desiccant on wheels to improve indoor air quality in buildings by not transferring exhausted VOCs back into the fresh outdoor air.

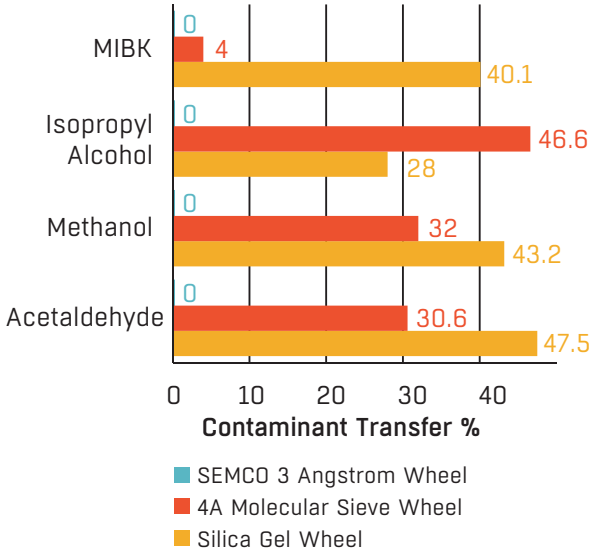

Source: Georgia Tech Research Institute Independent Investigation. Bayer, Charlene W and Hendry, Robert. "The Importance of the Desiccant in Total Energy Wheel Cross-contamination."

SEMCO Panel System

- Double-wall panel construction (2 inches thick with 18-gauge outer skin) eliminates exposed insulation and the associated risk of bacterial growth
- Double-wall removable panels provided for large internal components
- Gasketed double-wall access doors for all compartments
- Secondary roof of continuous standing-seam panels standard on units designed for outdoor installation
- Welded cabinet floor with integrated drain pan

Supply and Exhaust Air Fans

- AMCA rated fans sized for quiet and efficient operation, backward inclined (up to 16 inches diameter) and airfoil (18 inches diameter and greater)
- Mounted, balanced, tested and internally isolated for vibration
- Motors are NEMA frame, high-efficiency with a 1.15 service factor

Filter Sections

- Filters that are 30% (MERV 8) efficient are provided for the outdoor air and return airstreams
- Optional 65, 85 or 95% (MERV 11, 13, 14) cartridge filters can be provided in addition to standard 30% filters



Hoods and Dampers

- Low-leakage motorized fresh air damper and gravity exhaust air damper
- Optional motorized exhaust damper available
- Outdoor units provided with an intake and exhaust hood with bird screen

Electrical Package with Single Point Connection

- Power distribution panel with non-fused disconnect and branch circuit protection for each motor and transformer. Motors are wired to starters or VFDs.
- Custom control packages available
- 208 or 480V single-point connections available.

Optional Variable Speed Wheel Control

- Digital reading of temperatures
- Proportional heating control
- Automatic summer/winter changeover

Reheat Options

- Hot water coil
- Steam coil, non-freeze type
- Electric coil (requires a separate electrical connection point)

Cooling Options

- Chilled water
- Direct expansion (DX) coil

Key Benefits

- Standard, cataloged energy wheel products and wheel systems
- Independently certified wheel performance in accordance with ASHRAE Standard 84-91 and ARI Standard 1060 with regard to:
  - latent heat transfer efficiency
  - sensible heat transfer efficiency
  - pressure loss across wheel
- Equal latent and sensible heat transfer
- Highest performing wheel on the market
- Independently certified cross-contamination of less than 0.04%
- Field adjustable purge section
- Wheel media independently certified to pass NFPA 90A requirements for flame spread and smoke generation based upon ASTM E84 fire test method
- Reliable operation
- Minimal maintenance
- Over 20 years of successful installations
- Extended 3 and 5-year service contract available for wheel

SEMCO PACKAGED ENERGY RECOVERY SYSTEMS ARE AVAILABLE IN NINE CABINET SIZES RANGING IN AIRFLOW CAPACITY FROM 2,000 SCFM TO 40,000 SCFM.



CONFIGURATIONS
MATCHING TECHNOLOGY WITH APPLICATION

	EP	EPH	EPC	EPHC	EPCH	EPD
New & Retrofit Projects	X	X	X	X	X	X
Indoor/Outdoor Mounting	X	X	X	X	X	X
Pre-cools and dehumidifies in cooling season	X	X	X	X	X	X
Pre-heats and humidifies in heating season	X	X	X	X	X	X
Can be used with central HVAC system	X	X	X	X	X	X
Applications needing high percentage of outdoor air		X	X	X	X	X
Applications needing 100% outdoor air		X	X	X		
Primary source for winter temperature control		X		X	X	X
Primary source for summer temperature control			X	X	X	X
Primary source for controlling supply air humidity			X	X	X	X
Various post heating sources available		X		X		
Various post cooling sources available			X	X		
Controls latent loads					X	
Integrated full cooling and re-heating					X	X
Provides a precise humidity controlled environment						X
Provides free re-heat						X

EP

In addition to the SEMCO True 3Å energy recovery wheel, this dual-wall system contains backward curved supply and exhaust fans, outdoor air and return air filtration and an optional, full-electrical package with a single-point electrical connection. All EP family products are designed for either indoor or outdoor mounting.

EP: Cooling Mode

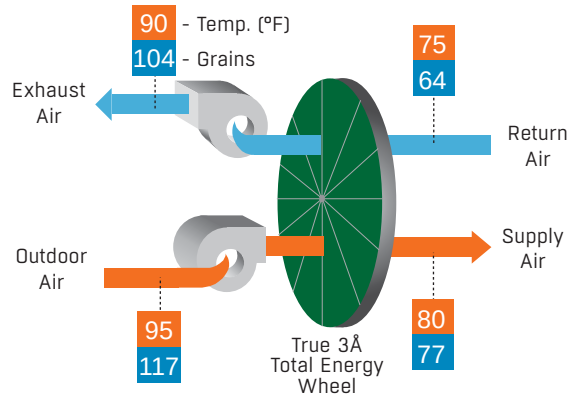

- Precools and dehumidifies outdoor air during the cooling season.
- Preheats and pre-humidifies the outdoor air during the heating season.
- Supplies preconditioned outdoor air to conventional HVAC systems, allowing them to effectively increase outdoor air percentages.
- Preconditioned outdoor air can be introduced to the return air plenum serving a central HVAC system.
- It can also be supplied directly to the conditioned space since the system's recovery efficiency ranges between 74 and 85% (in balanced flow operation).

EPHC: Cooling Mode

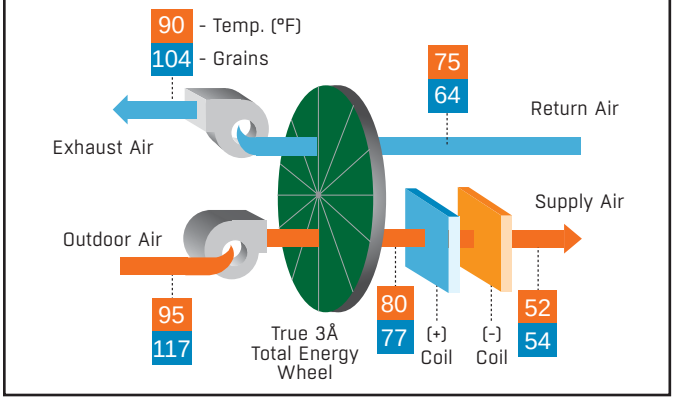

EPH, EPC, EPHC

These products build on the EP product. However, unlike the EP, they integrate full heating and cooling options. The cooling options include either chilled water or DX cooling coils, with options regarding the number of fins per inch and the number of row options. The heating options include either hot water, steam or electric coils.

These configurations are applied to installations where there is a need for 100% outdoor air. The SEMCO system is the primary source for temperature and/or humidity control. This includes hospitals, manufacturing areas, laboratories and casinos. These products are also used to precondition buildings where the outdoor air goes directly to the space, but requires additional post heating or cooling to supplement what is being provided by the energy recovery wheel.

EPCH

This product builds on the EPHC product, integrating full heating and cooling options.

Applications for this product include buildings that need high percentages of outdoor air for a humidity controlled environment, where the SEMCO system is the primary source. This product may be the sole source for temperature and humidity control. It also handles primarily latent loads by over-drying the outdoor air with the cooling coil and then reheating to a temperature that is comfortable to the occupants.

EPCH: Cooling Mode

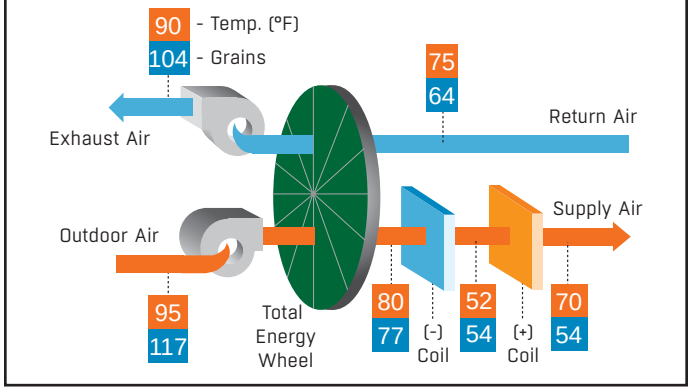

EPD

This product builds on the EP product but integrates full cooling for humidity control and a sensible energy wheel to provide free reheat. This dual-wall system contains an True 3Å energy recovery wheel, a sensible energy wheel, backward curved, supply and exhaust fans, outdoor air and return air filtration, cooling coil, limited capacity reheat coil and an optional full-electrical package including a single-point electrical connection. The EPD offers the same heating and cooling options as listed for the EPHC.

The applications for this product include buildings that need high percentages of outdoor air for a humidity controlled environment where the SEMCO system provides 45-55 grains of water/pound of dry air and a neutral temperature of 65-70 degrees to the space. This approach allows conventional HVAC systems to operate most efficiently by cycling on and off, while using all recirculated air and handling only sensible loads. Good applications for the EPD systems include data centers, classrooms, hotels, dormitories, casinos and laboratories. This approach to ventilation of humidity control is very energy efficient since the EPD system can generate up to 10 tons of latent cooling for every 3 tons input with no cost of reheating.

EPD: Cooling Mode

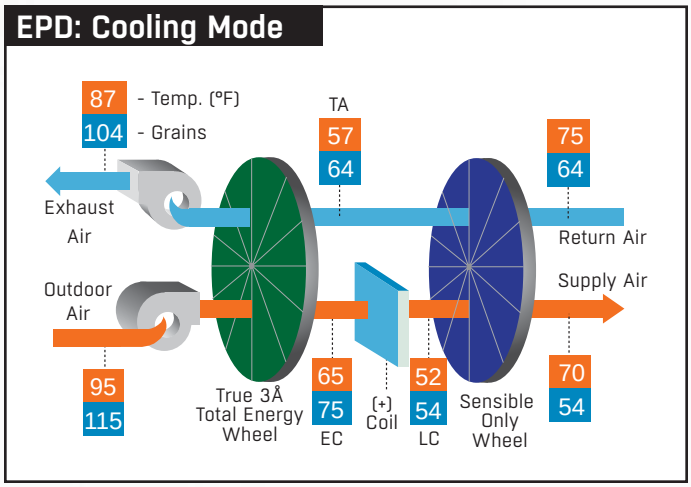

THE SEMCO SYSTEM
ENERGY SAVINGS



At SEMCO, we design products that fit together to maximize indoor air quality and energy efficiency. When specified with a SEMCO chilled beam system and efficient NEUTON pump modules, the EP series can produce even greater savings.

EP SYSTEM IN COOLING MODE

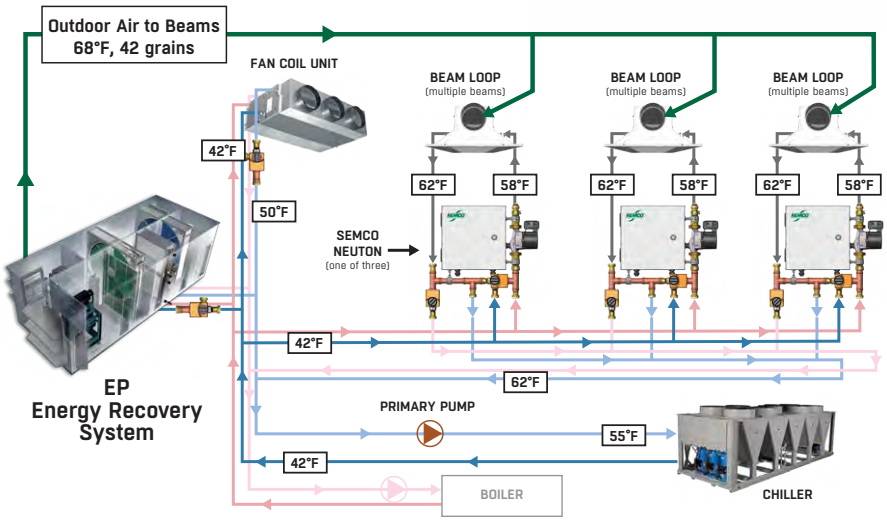

IQHC ACTIVE CHILLED BEAM

- Industry best capacity to energy consumption ratio
- Utilizes the lowest air and water pressure to enhance the overall energy benefit of chilled beams
- Universal duct and water connections for easy to installation
- Superior indoor air quality and energy efficiency.

NEUTON™ CONTROLLED CHILLED BEAM PUMP MODULE

- Reduces cost of a chilled beam installation by 30% or more by allowing for smaller pipe diameters, fittings, and fewer feet of pipe
- Cuts the amount of zone piping and fittings in half
- Reduces beam loop pump energy by up to 90% - high efficiency, variable speed pump uses a fraction of the energy used by traditional pump loops

APPLICATIONS

DATA CENTERS - HOSPITALS - UNIVERSITIES - CLASSROOMS - HOTELS - CASINOS - LABORATORIES -







"Most chilled beam manufacturers don't make DOAS units. A manufacturer making both the active chilled beams and the outdoor air unit to supply them dehumidified air was integral for synergy and purposes of single source responsibility."

- Scott Mazo, principal, University Partnership Associates, Philadelphia, which developed the first Pre-Certified LEED Platinum building in Philadelphia, 2.0 University Place

VAV (No Humidity Control) vs. Chilled Beam Systems (Humidity Controlled) Energy Used During Cooling Mode: Typical Office

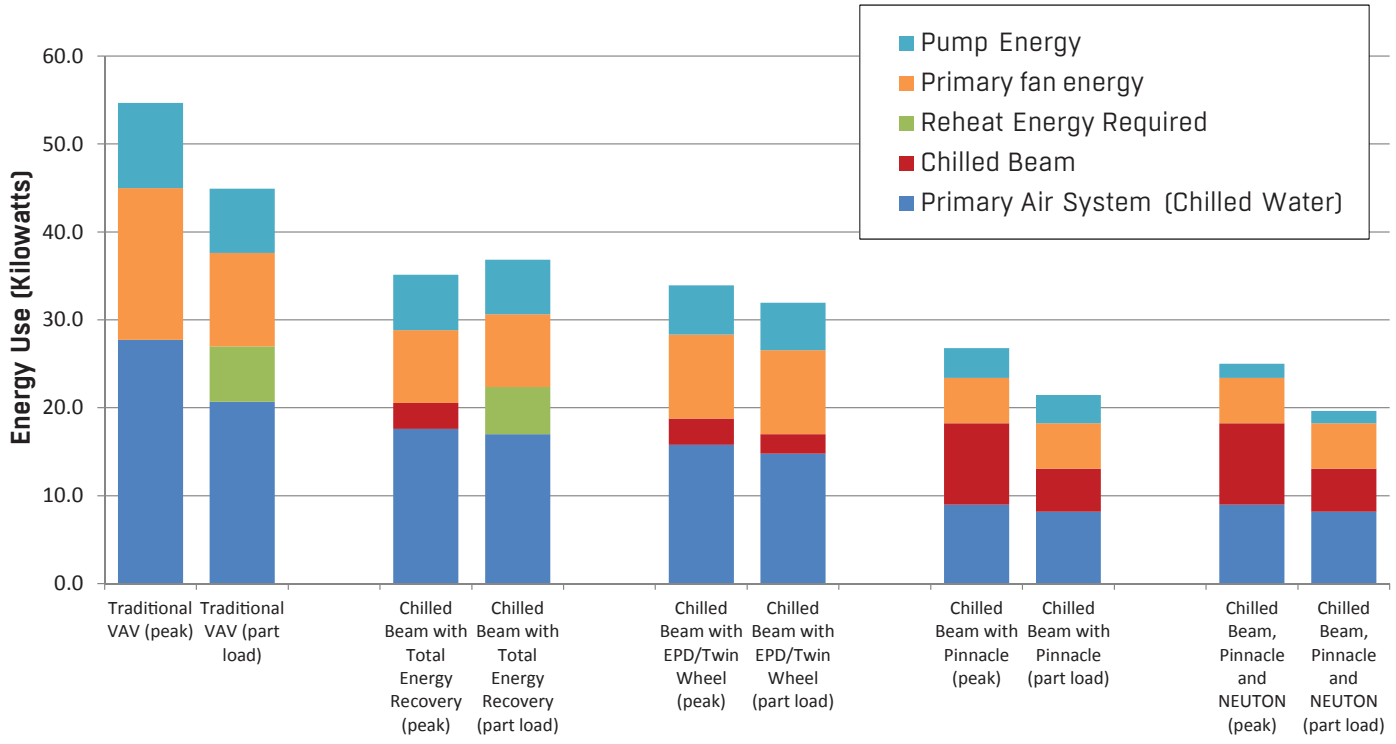

- MANUFACTURING - OFFICE BUILDINGS - RETAIL - NURSING HOMES - DORMITORIES - AND MORE







SEMCO®
A FläktGroup Brand

WE BRING **AIR** TO LIFE

SEMCO® is a global leader in air management. We specialize in the design and manufacture of a wide range of air climate and air movement solutions. Our collective experience is unrivaled.

Our constant aim is to provide systems that precisely deliver the best indoor air quality and performance, as well as maximize energy efficiency.

SEMCO® A FläkGroup Brand
Corporate Headquarters
1800 East Pointe Drive
Columbia, Missouri 65201 USA
573 443 1481
sales.semco@flaktgroup.com

WWW.SEMCOHVAC.COM | EP Series | 20161215



To learn more about SEMCO offerings and to contact your nearest representative please visit **www.semcohvac.com**

SEMCO embraces a policy of continuous development and improvement, the right is reserved to supply products which may differ from those illustrated and described in this publication. Certified dimensions will be supplied upon request on receipt of order.

© SEMCO LLC 2016 All Rights Reserved. The SEMCO logo is a registered Trademark of SEMCO LLC.

Commercial Gas
Tankless Water Heater

TANKLESS CONDENSING HIGH EFFICIENCY COMMERCIAL GAS

Ultra-Low NOx gas tankless water heaters with condensing technology featuring up to 0.95 Uniform Energy Factor (UEF) which lowers operating costs and is environmentally friendly.

FEATURES:

ULTRA-LOW NOX CONDENSING TECHNOLOGY PROVIDES UP TO 0.95 UNIFORM ENERGY FACTOR

DURABLE HEAT EXCHANGER

- Primary Heat Exchanger is constructed of Commercial-Grade Copper that is more resilient to erosion and is 25x better at heat transfer than stainless steel thus stabilizing outgoing water temperatures quicker
- Secondary Heat Exchanger is made of Type 316L Stainless Steel to protect against corrosion

CONTINUOUS MAXIMUM FLOW RATES UP TO 10.0 GPM

ENERGY STAR® QUALIFIED

AVAILABLE IN NATURAL GAS OR PROPANE (LP)

INDOOR MODEL - INCLUDES INTEGRATED TEMPERATURE CONTROLLER AND ADVANCED DIAGNOSTICS TO SIMPLIFY TROUBLESHOOTING

OUTDOOR MODEL - INCLUDES A WALL MOUNT TEMPERATURE REMOTE CONTROLLER AND ADVANCED DIAGNOSTICS TO SIMPLIFY TROUBLESHOOTING

FACTORY-INSTALLED POWER CORD INCLUDED FOR INDOOR MODELS

EASY-LINK UP TO 4 UNITS (CT-199 MODELS ONLY)

- With no additional parts or accessories needed

MULTI-LINK UP TO 20 UNITS (CT-199 MODELS ONLY)

COMMON VENT UP TO 8 UNITS

COMPLIES WITH LEAD FREE STANDARDS

- Safety Features:
- Air-Fuel Ratio (AFR) Sensor
- Exhaust & Water Temperature Safety Control
- Overheat Cut-Off Fuse

INTERNAL FREEZE PROTECTION SYSTEM

POWER DIRECT VENT DESIGN

- Exhaust, 3" PVC Venting up to 70 feet or 4" PVC Venting up to 100 feet
- Provides flexible venting with PVC, CPVC, or ABS Pipe for Intake and Exhaust (solid core only). Canadian Installations Require ULCS636 Listed PVC or CPVC Pipe for Venting.
- Category III or IV venting can be used

ACCESSORIES

- Pipe Cover
- Neutralizer Kit
- Isolation Valve Kits
- Concentric Termination

WARRANTY

- 6-year limited warranty on heat exchanger in commercial applications
- 5-year limited warranty on all parts

INDOOR MODEL
CT-199



OUTDOOR MODEL
CT-199



Meets: SCAQMD Rule 1146.2
California and Texas

ANSI Z21.10.3 CSA 4.3

©August 2017 A. O. Smith Corporation. All Rights Reserved

Commercial Gas Tankless Water Heater

Model Number	Type	Gas Consumption Input		Inlet Gas Pressure		UEF	Maximum GPM*	Hot/Cold Connections	Gas Connection	Dimensions in Inches			Approx Shipping Weight (lbs)
		Minimum BTU/H	Maximum BTU/H	Minimum in. W.C.	Maximum in. W.C.					Height	Width	Depth	
Indoor Models													
ACT-199I-N	Natural	15,000	199,000	4.0	10.5	0.93	10	3/4" NPT	3/4" NPT	23-5/8	17-3/4	11-1/4	71
ACT-199I-P	Propane	13,000	199,000	8.0	14.0	0.93	10	3/4" NPT	3/4" NPT	23-5/8	17-3/4	11-1/4	71
Outdoor Models													
ACT-199O-N	Natural	15,000	199,000	4.0	10.5	0.95	10	3/4" NPT	3/4" NPT	23-5/8	17-3/4	11-1/4	69
ACT-199O-P	Propane	13,000	199,000	8.0	14.0	0.95	10	3/4" NPT	3/4" NPT	23-5/8	17-3/4	11-1/4	69

All dimensions are in inches.
15-150 psi Water Pressure. 40 psi or above is recommended for maximum flow.
*Current numbers based on factory testing; 0.4 GPM required for continuous fire after initial ignition.
Indoor models are certified from sea level to 10,100 ft. elevations.
Outdoor models are certified from sea level to 6,000 ft. elevation.
The manufacturer reserves the right to discontinue, or change at any time, specifications or designs without notice and without incurring obligation.

CT-199 MODEL

Flow Rate vs. Temperature Rise

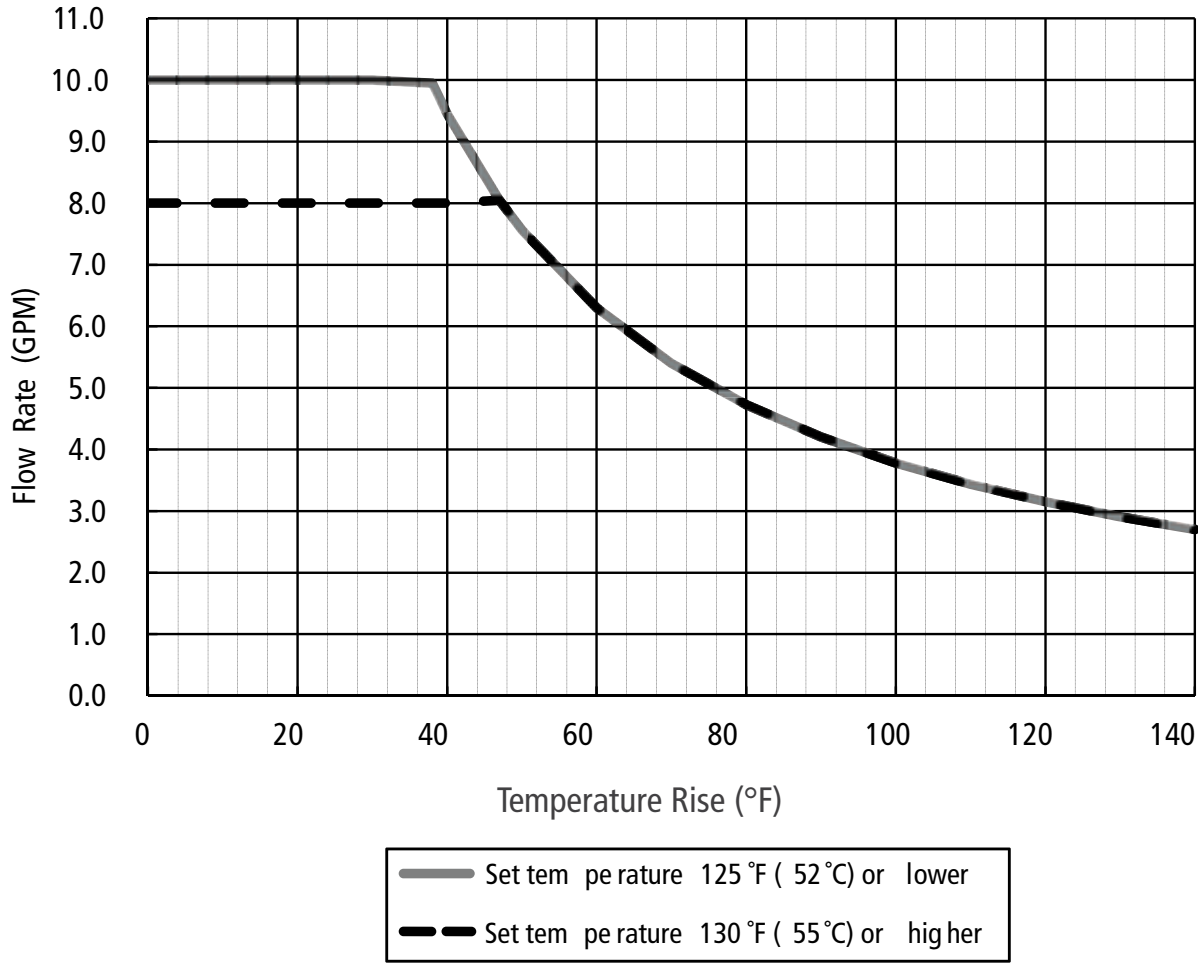

Commercial Gas Tankless Water Heater

INDOOR MODEL

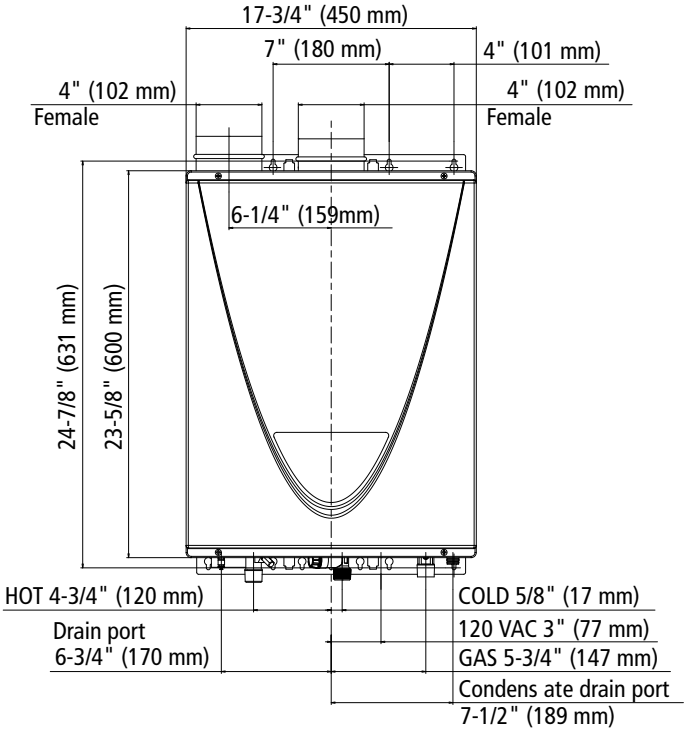

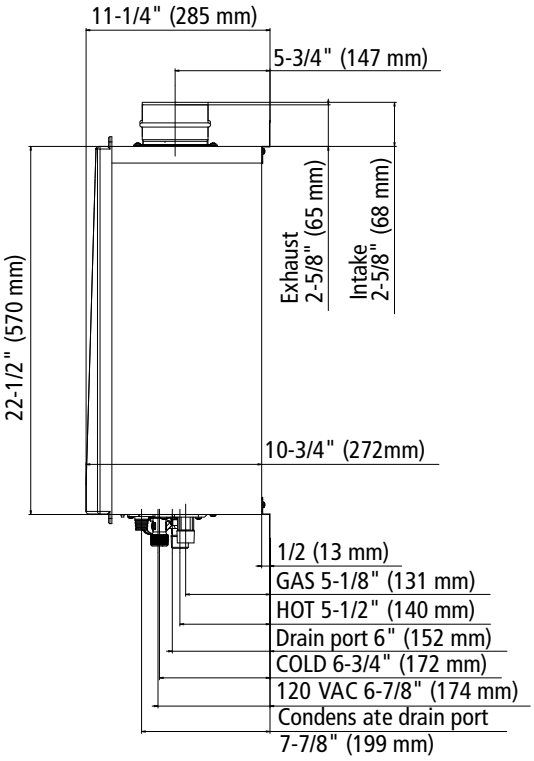

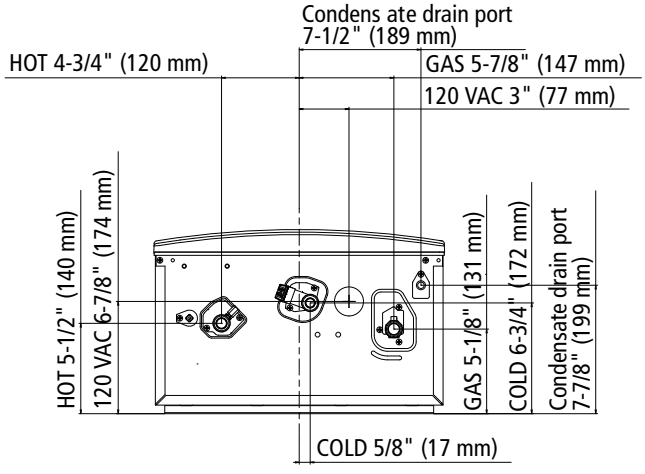

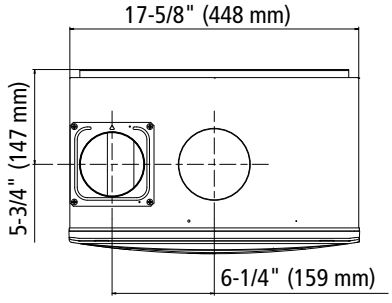

OUTDOOR MODEL

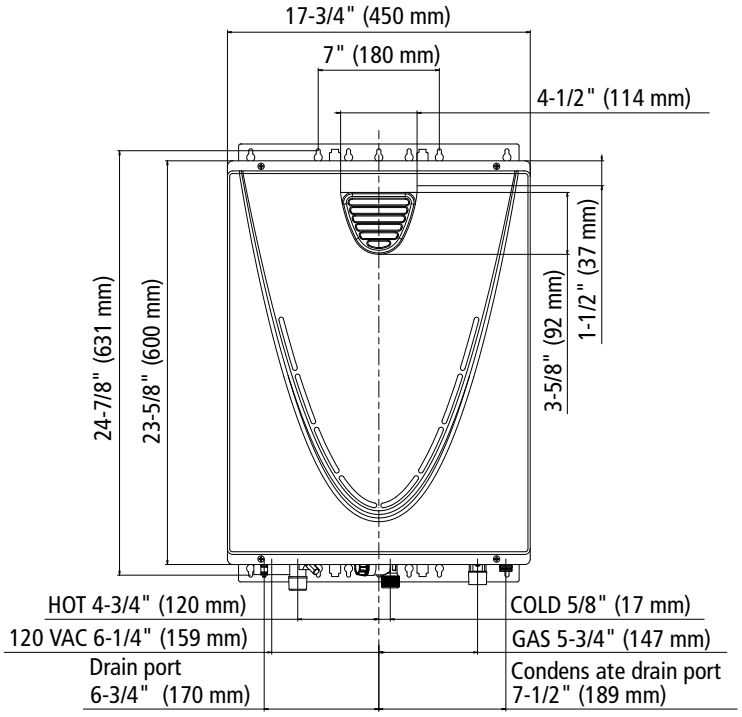

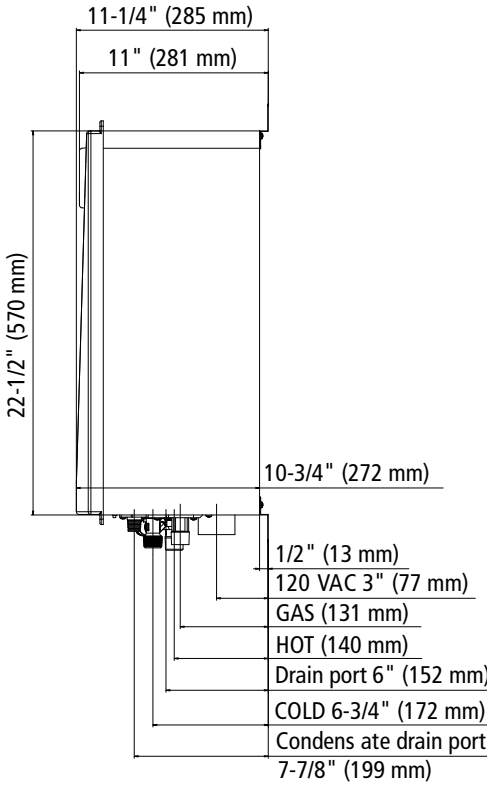

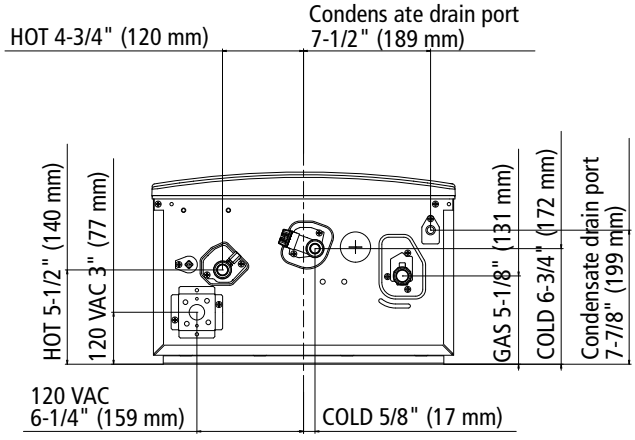

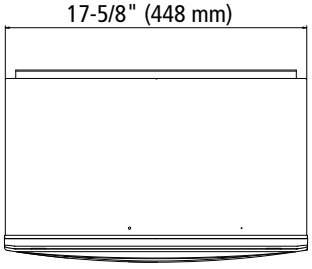

TANKLESS CONDENSING HIGH EFFICIENCY SPECIFICATIONS

The fully modulating, on-demand, condensing gas fired tankless water heater(s) shall be A.O. Smith model CT-199, having a maximum input rating of 199,000 Btu/h and available in NG or LP. The heater shall have ¾ in. male NPT water and gas connections. The inlet gas supply pressures shall be 4.0 in. WC (min.) up to 10.5 in. WC (max) for NG and 8.0 in. WC (min.) up to 14 in. WC (max.) for LP. The indoor heater(s) shall incorporate an integrated temperature controller that will provide diagnostic information, fault history, and heater set temperature. The outdoor heater(s) shall be factory supplied with a temperature remote, 100209924, that can be installed up to 400 ft. from the heater using 18 gauge (minimum) control wire. The temperature remote shall provide diagnostic information, fault history, and heater set temperature. The heater(s) shall operate using 120 V / 60 Hz power source. The indoor heater(s) will incorporate a factory installed power cord.

The indoor heater(s) shall be vented with 3" or 4" diameter schedule 40 PVC, CPVC, ABS, or Category IV vent pipe with a length not to exceed 70 ft. (equivalent) for 3" vent or 100 ft. (equivalent) for 4" vent, terminating horizontally or vertically. The intake pipe may use material such as PVC, ABS, aluminum, or Category IV pipe and cannot exceed 70 ft. (equivalent) for 3" vent or 100 ft. (equivalent) for 4" vent. The outdoor heater(s) shall be constructed with an integral exhaust vent on the front of the heater.

The water heater(s) shall use a commercial-grade copper, fin tube primary heat exchanger with quick release brass or bronze waterways. The secondary heat exchanger shall be constructed from stainless steel 316L. The heater(s) shall be controlled by an on-board solid-state printed circuit board which uses the following factory installed components: thermistors to monitor water temperature and exhaust temperature; a flow sensor to measure flow rate; a flame sensor to monitor combustion; an Air-Fuel Ratio Rod to measure and adjust air input in order to maintain optimal combustion efficiency. The heater also consists of in-line fusing and surge absorbers for electrical surge protection, an electronic spark igniter, aluminized stainless steel burners, hi-limit temperature switches to monitor water and exhaust temperatures, modulating gas valve, dual freeze protection that will automatically fire the heater (indoor model only) and use heating blocks to protect the heat exchanger, and an overheat cutoff fuse.

The heater(s) can manifold to Easy-Link up to 4 heaters to provide additional capacity. The Easy-Link controls shall be built onto the on-board solidstate printed circuit board and does not require external controls. The linking control wire shall be supplied with the heater. The heater(s) can use a Multi-Unit controller, 100112691, to manifold 5-20 heaters. The Easy-Link and Multi-Unit Controller shall modulate the system for the most efficient performance. The Easy-Link and Multi-Unit Controller shall rotate the priority heater every 12 hours of operation time or 100 starts for balanced duty/cycle operation.

The heater(s) shall be CSA approved for sale in the United States and Canada, ENERGY STAR® qualified with a minimum uniform energy factor of 0.93, meets the energy efficiency requirements of the U. S. Department of Energy and ASHRAE 90.1-2007, complies with Ultra-Low NOx emissions of 14 ng/J or 20 ppm, and shall be certified to NSF 5 Standards.

©August 2017 A. O. Smith Corporation. All Rights Reserved