VOLUME II - ECM / COST SUBMISSION

Response to Request for Quotes for a Guaranteed Energy Savings Project for the Commonwealth of Pennsylvania Department of General Services at

Pennsylvania Department of Corrections SCI Mercer - Mercer, PA

Project No. GESA 2023-2
Contract No. DGS GESA 2023-2

Tony Prelec, Account Executive
724.996.7970

August 29, 2023

energy systems group

©2023 Energy Systems Group, LLC | ESG, ENERGY SYSTEMS GROUP, PUSH FURTHER. THINK BEYOND. and various designs thereof are trademarks of Energy Systems Group, LLC.

TABLE OF CONTENTS
VOLUME II: ENERGY CONSERVATION MEASURES/COST SUBMITTAL

Cover Letter
Executive Summary

Section 2-6 Energy Conservation Measures and Costs

a. Investment Grade Audit
b. Appendix R – ECMs Statement
c. ECMs included in Project
d. Technical Feasibility Reasonableness
e. Training for Staff
f. Proposal Meets Commonwealths Needs
g. Additional ECMs Developed by ESG
h. Cost – ECM Cost Breakdown w/ Cash Flow
i. Statement About Energy Analysis
j. Monitoring & Maintenance
k. Measurement & Verification

Electronic Copy (USB Flash Drive) Includes:
Full Copy of ECM / Cost Submission w/ Appendix Items listed below

Appendix Items: (included with electronic copy only)

- Appendix 1: ECMs Considered but not Recommended
- Appendix 2: Utility Baseline Analysis
- Appendix 3: Fuel Switch and Central Utility Plant Analysis
- Appendix 4: Energy Calculations including Lighting Line by Line
- Appendix 5: Equipment Cut Sheets
- Appendix 6: Inflation Reduction Act & Rebates

©2023 Energy Systems Group, LLC

energy systems group

August 29, 2023

Becky Tomlinson
403 North Office Building
401 North Street
Harrisburg, Pennsylvania 17120

Subject: Response to Request for Proposals for a Guaranteed Energy Savings Project at SCI Mercer; Project Number GESA 2023-2; Contract Number DGS GESA 2023-2

Dear Ms. Tomlinson and Selection Committee Members:

Energy Systems Group, LLC, (ESG) is pleased to provide our response to the above referenced Energy Savings Improvement Program to assist the Department of General Services and the Department of Corrections at SCI Mercer – Contract No. DGS GESA #2023-2.

Energy Systems Group, State of Pennsylvania Vendor Number is **383996**. As a comprehensive and NAESCO accredited Energy Service Provider, ESG designs, develops, implements, operates, maintains and verifies innovative, customer focused energy and operation solutions that enhance our client partners' facilities, productivity, comfort and finances so they can focus on meeting their core mission. ESG possesses all of the resources necessary to implement an energy performance contract project with SCI Mercer.

The ESG team offers a complete complement of staff members to develop and implement comprehensive energy efficient and guaranteed savings programs to assist various agencies in achieving mandated reductions in energy consumption. To ensure the strongest value and responsiveness, subcontractors such as mechanical, lighting and water conservation will be selected/bid for specific jobs.

The primary point of contact for questions or notification regarding the submitted response is:

Tony Prelec, Senior Account Executive
tprelec@energysystemsgroup.com
Phone Number: 724.996.7970
Fax Number: 833-834-0324

The primary person authorized to bind the company; and, the primary person authorized to conduct contract negotiations:

Steven Craig, President or
scraig@energysystemsgroup.com
Phone Number: 812-471-5000
Fax Number: 812-475-2544

Thank you for your time and consideration. We look forward to your acceptance of our proposal.

Sincerely,

Brian K Gower

Brian K. Gower
Vice President

EXECUTIVE SUMMARY

EXECUTIVE SUMMARY

Energy Systems Group (ESG) is pleased to submit this proposal in response to the SCI Mercer Request for Quotes issued by PA DGS for a guaranteed energy savings agreement (GESA) project.

The information in this proposal will show why ESG is the leader in customer satisfaction and how we set ourselves apart from the competition. Our value is manifested in having the best expertise, financial strength, and long-term dependability. But most importantly, our track record shows our commitment to forming long-term partnerships with our customers, helping them meet infrastructure and environmental goals and standing behind our workmanship 100%.

ESG at a Glance

- Award Winning, Full-Service ESCO
- NAESCO-Accredited Energy Service Provider (ESP)
- Leading Utility Energy Service Contract Partner
- U.S. Department of Energy (DOE) Qualified ESCo
- U.S. DOE Super ESPC-Approved Contractor
- U.S. Army Corps of Engineers Qualified ESCO

Since 1994, Energy Systems Group (ESG) has implemented over ***830 energy efficiency and facility infrastructure improvement projects totaling over $4.1 Billion for more than 530 Customers in 39 States. ESG is licensed in 48 States.***

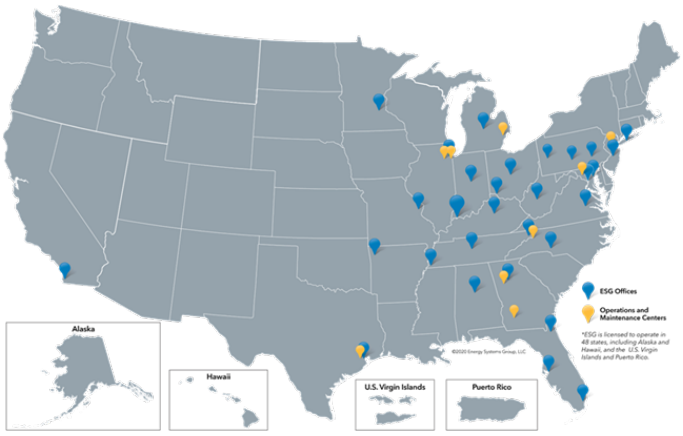

Our growth and expansion comes as a result of our dedication to project completion — not just with an "on-time and on-budget" mentality — but with a foundational business philosophy and a consistent objective of overachieving to provide exceptional value and results that translate into the highest level of customer satisfaction and deliver the greatest possible benefits to each of our Customers.

Another important factor contributing to our success is the fact that ESG routinely matches our project team and their capabilities and experience with each specific type of project.

ESG has extensive experience working in Correctional Facilities and we are very excited that we were able to develop a **budget-neutral Base Project which fully pays for itself through savings for SCI Mercer and includes nine of the seventeen Core ECMs.**

Per the guidelines of the RFQ, ESG was also able to develop a larger Secondary GESA Project for PA DOC consideration, which includes Energy Related Cost Savings. This larger GESA Project includes fifteen (15) Core ECMs plus nine (9) additional ESG created ECMs that could be bundled together in order to drastically improve the SCI Mercer Infrastructure and Operations.

©2023 Energy Systems Group, LLC

BASE PROJECT	SECONDARY PROJECT
$8.4 M	**$28.3 M**
Year 1 Savings $1 M	**Year 1 Savings $1.5M**
9 Core ECMs / 4 additional ECMs	**15 Core ECMs / 9 additional ECMs**

Our ESG Team spent a considerable amount of time investigating and researching the following items relative to SCI Mercer:

- Heating Technology and/or Fuel Switch: Detailed analysis and comparison of the existing electric heating systems using electric resistance heating and a comparison to the proposed solution: natural gas heating and/or air source heat pump heating. Please see Appendix 3 in our proposal for additional information.
- Central Plant Cooling and Pumping: An analysis of converting to a central utility plant, proved to be a very financially attractive option for SCI Mercer
- Utilizing a Solar PPA: Licensing the land to a PPA provider rather than direct ownership of the solar array by PA DOC is financially more attractive and eliminates the need for SCI Mercer staff to maintain the solar system.
- Maximizing IRA, Rebates, and SRECs: The Inflation Reduction Act (IRA) is a recently enacted legislation, that now allows direct payment to a tax-exempt public entity, such as State Government Agencies. A more detailed analysis of IRA percentages and areas that apply to SCI Mercer are listed in the Appendix section of this submission.
- Majority of existing HVAC and electrical distribution, main transformer, and infrastructure are original and at the end of their useful life. ESG proposed solutions that will provide new equipment, and eliminate R22 refrigerant.
- Potable Water Plant: Our proposed potable water plant will provide a tremendous amount of savings when combined with the water conservation ECM. SCI Mercer will see 90% reduction in water costs.
- The Wastewater Treatment Plant (WWTP) control-up upgrades will eliminate a possible, future, facility shutdown by replacing the older WWTP control system which is no longer supported by the manufacturer.
- The two current Emergency Generators are maxed out during the winter, and have no redundancy. By converting to Natural gas and additional Solar sources, no additional emergency backup generator is needed.

Environmental Impact. Our Base project, at a minimum, will reduce your carbon footprint in the short and long term. Below are your equivalent environmental reductions over the eighteen-year project term.

4.86 Million Pounds of Coal Burned

956+ Vehicles Driven in a Year

4,341 Metric Tons of CO2

10,040 Barrels of Oil Consumed

5,176 Acres of Forest for a Year

Energy for 845+ Homes for a Year

©2023 Energy Systems Group, LLC

The Energy Systems Group Approach

- ✓ **Transparent Open Book Pricing:** Open Book Pricing allows ESG to be your advocate, a true "bottom up project build", where the focus is on efficiency, value and project performance not margins.
- ✓ **Green Build Process:** ESG is committed to environmental stewardship and the conservation of our natural resources. Our Engineering, Design and Construction process utilizes the Green Globes Certification guidelines to minimize our impact to the environment as well as provide a tangible measuring stick of success.
- ✓ **Engineering Capacity:** ESG's Engineering Team and our Engineering Center of Excellence (ECOE) will be supporting this project. CJL Engineering will provide supplemental design services as needed. CJL Engineering is well versed in all DGS requirements and has a long record of successful State projects.

Statements Regarding RFQ Requirements

- Energy Systems Group (ESG) has received and acknowledged all five bulletins released by PA DGS pertaining to the SCI Mercer RFQ.
- ESG has not included any cost information (ECMs and construction cost or energy savings) in the SCI Mercer Technical Submission.
- ESG has not labeled any portion of our proposal as proprietary or confidential.
- The total energy savings project in our ESG final scope of work will be at least 95% of the savings projected in the Quote, and the actual ECM costs shall be within 10% of the costs listed in the CEA/IGA, and the Base project will be self-funded from energy savings over the term of the project, in this case 18 years.
- Our sample RFQ Project schedule should not be construed as the final CPM schedule.
- The Energy Consultants service fees are included in our project cash flow.
- Measurement and Verification Services are included in the first three years of the project.

Thank you for this opportunity to once again serve the Commonwealth of Pennsylvania, PA Department of Corrections and PA Department of General Services. We look forward to your acceptance of our proposal and would be honored to be selected as the ESCO for the SCI Mercer GESA project.

©2023 Energy Systems Group, LLC

VOLUME II - ECM / COST SUBMISSION

2.6. Energy Conservation Measures and Cost Submission

INVESTMENT GRADE AUDIT

a. *Scope of the Investment Grade Audit (IGA) including systems covered, personnel, methodology, and milestones*

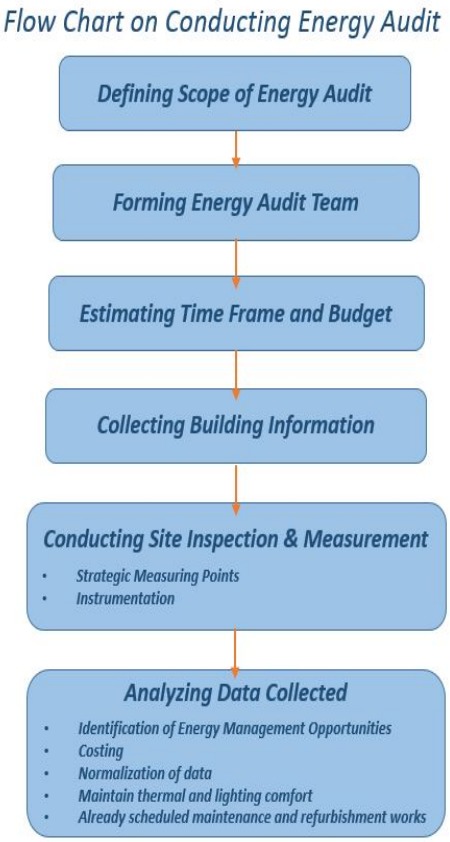

During the IGA, ESG will compile results from the facility audits and comprehensive cost savings analysis and will include a careful evaluation of the most cost-effective Energy Conservation Measures (ECMs) in conjunction with any specific facility needs and/or goals to be included in the final list of recommended ECMs. ESG's final report will also include ECMs that were excluded due to poor economics or customer operational concerns.

ESG's systematic approach to project development includes a preliminary site visit to evaluate existing equipment operation and conditions. Following the initial survey, a list of deficiencies or upgrades is identified, and a measurement/metering plan is devised. Short-term measurements, in combination with drawings, manufacturer's data, and our staff's expertise, are utilized to develop baseline energy budgeting for various energy-consuming systems. The baseline energy budgeting is a critical step to establishing boundaries for realizable energy savings through various ECMs. The total building energy use (utility bills or, in the absence of utility bills, calculated from benchmark data for similar facilities or systems) is then compared to the aggregate energy budget number to validate the baseline values further. **Please review Appendix 2 - Utility Baseline Analysis and Appendix 3 - Fuel Switch and Central Plant Analysis, where ESG developed energy use & and cost baseline and baseline energy breakouts.**

ESG's baseline and energy savings calculation methodologies are based on standard engineering principles from ASHRAE, AEE or approved Building Simulation software. The spreadsheet calculations are based on hourly calculations and hourly BIN data with weather data based on Typical Meteorological Year-3 (TMY-3) information.

ESG engineers and project managers have years of field experience in identifying, analyzing, quantifying and implementing ECMs. From the most common ECMs, such as lighting, to the more complex and innovative measures, such as mechanical system performance optimizations, ESG has successfully developed, installed, and achieved exceptional performances. ESG offers expertise in the development of quality ECMs, including accurate financial analysis to determine the best package of ECMs.

ESG has the required expertise in all aspects of developing, designing, installing, maintaining, and verifying Guaranteed Energy Savings Agreement (GESA) projects. Over the years, we have sought out and retained professionals who possess the specific skillsets to be a highly capable GESA provider. **The ESG Northeast Region team has significant years of combined professional experience in GESA contracting**.

©2023 Energy Systems Group, LLC

These professionals have expertise in:

- Identifying energy conservation measures
- Preparing detailed engineering feasibility studies
- Developing preliminary plans and specifications
- Investigation & analysis of:
  - Existing HVAC systems
  - Fuel switching opportunities
  - Operational and utility costs
  - Current operation practices
  - Maintenance practices & costs
  - Alternative energy, including solar & geothermal
- Maximizing energy and cost savings to provide a program that is fully funded with energy savings
- Performing building simulations to establish an accurate baseline and generate savings calculations
- Providing definitive cost and savings estimates for proposed ECMs
- Guaranteeing the performance of the ECMs

ESG has selected a team of in-house licensed professional engineers and construction management specialists to audit the facilities to evaluate existing and generate recommended solutions. Key ESG personnel who will have varied roles in the audit phase are Tony Prelec, Dan Khuu, Brian Borillo, William Hillsinger, Tom Twigg, John Topmiller, and Stephen Richmond. The subcontractors ultimately selected to assist with the facility audits and analysis will depend on the project size, energy systems involved, and any preferences identified by DOC while optimizing SDB and VBE participation.

Our approach to performing detailed audits, identification, and design of improvement measures, and selection process for energy savings and operating cost measures includes a detailed analysis of your objectives, facilities, and cost of operations. Most importantly, it includes your team's input at every step of the process.

ESG will schedule workshop meetings with key department heads, facility personnel, and other parties desired by DOC. The purpose of the workshops will be to review all of DOC's goals and priorities, planned engineering approaches, and key process and timeline plans. With our commitment to developing this project in a collaborative effort, we will conduct the following workshops during the IGA:

- Utility Baseline;
- Scope of work/verification;
- Measurement & Verification methodologies; and,
- Business case (detailed scope, costs, and savings review and finalize economics).

We expect the outcome of this effort to be a high level of satisfaction with ESG's process and a final project that delivers exceptional value. Understanding your objectives is essential for measuring project success. Our goal is to co-author a plan that addresses current and long-range objectives. Specific emphasis will be placed on:

Maximized Savings	Installation Excellence	Long-Term Results
• Minimize utility expenditures • Increase operating efficiency • Reduce service issues • Reduce maintenance costs	• Corrections-grade installation • Consistent communication • Document expectations • Meet & exceed expectations • No change-order construction • Best quality and best value solutions	• Guarantee energy savings to protect DOC's investment • Reduced operation and maintenance costs • Better working and living environments • Ongoing staff training to maximize savings impacts

©2023 Energy Systems Group, LLC

Once on site, ESG's development team will analyze the facility, reviewing major building systems, control sequences, and overall operations through field measurement and analysis equipment. As previously mentioned, when appropriate, ESG may also use energy analysis and facility modeling software to examine your utility consumption, identify indications of current operational inefficiencies, and determine a facility's pattern of use. Advanced building modeling software may also be utilized to predict the impact of various changes to a building's envelope, mechanical, controls, and electrical systems on utility consumption. Our audit process also includes the placement of data loggers or permanent metering to accurately establish baseline information such as occupancy and hours of operation. At the conclusion of the IGA phase, a final IGA report is generated and provided to all parties for review and approval.

ENERGY CONSERVATION MEASURES

b. Proposed ECMs in the RFQ. If there is a reason a proposed ECM listed in the Core ECMs Appendix to this RFQ by the Commonwealth is not included in the scope of the Quote, the Offeror must provide a detailed explanation as to why the ECM was excluded from the scope. ***Failure to include the estimated cost and cost savings or to discuss why the ECM should not be included will result in a five (5) point deduction from the ECM/Cost submission score for each ECM not included or discussed.***

A list of proposed ECMs and reasons certain Appendix R Core ECMs were not included in our Base Project are described below. ESG has addressed all Core ECMs in this response to the RFQ, either as part of the Base or Secondary project, or included below with additional information regarding why they were excluded herein.

c. A preliminary listing of ECMs both included and NOT included in the project

Tables indicating which Core ECMs are included and those not included can be found on the following pages.

Table 1 below represents a summary of our proposed Base and Secondary project; the Secondary project utilizes Energy Related Cost Savings per the RFQ guidelines. ESG's Base project is a fully self-funded program utilizing guaranteed energy savings, O&M material-only savings Act 129 rebate funding, and Inflation Reduction Act Tax Credits. Our Secondary project uses limited energy-related cost savings to supplement guaranteed energy savings to address those measures. All energy conservation/facility improvement measures can be discussed and explored further at the desire of DGS, DOC, and SCI Mercer.

©2023 Energy Systems Group, LLC

Table 1 – ECMs Listed by Project
ECM Descriptors = Core (Appendix R), ESG = ESCO suggested

ECM #	ECM Descrition	Base Project	Secondary Project	ECM Considered
01A	**CORE ECM #1 A - Solar PV System (PPA) Base**	✓		
01B	**CORE ECM #1 B - Solar PV System (PPA) Alternate**		✓	
02	**Core -ECM #2 - LED Lighting Upgrade**	✓	✓	
03	**Core - ECM #3 - Extend natural gas service**		✓	
04	**Core - ECM #4 - Convert electric heating to natural gas (Included in ESG #6 Central Utility Plant)**		✓	
05	**Core - ECM #5 - Convert electric hot water heating to natural gas (Included in ESG #6 Central Utility Plant)**		✓	
06	**Core - ECM #6 - Water Conservation**	✓	✓	
07	**Core - ECM #7 - Controls Upgrade - Water Systems**	✓	✓	
08	**Core - ECM #8 - Convert existing HVAC units to Heat Pumps (Included in ESG #6 Central Utility Plant)**		✓	
09	**Core - ECM #9 - Chiller Upgrade (Included in ESG #6 Central Utility Plant)**	✓	✓	
10	**Core - ECM #10 - Geothermal Investigation**	✓	✓	
11	**Core - ECM #11 - Geothermal Expansion**	✓	✓	
12	**Core - ECM #12 - Geothermal Power**			✓
13	**Core - ECM #13 - Convert Kitchen Appliances to Natural Gas**		✓	
14	**Core - ECM #14 - Controls Upgrade - HVAC Systems**		✓	
16	**Core - ECM #16 - EV Charging Stations**	✓	✓	
17	**Core - ECM #17 - Replace Main Transformer**	✓	✓	
18	ESG #1 - Install a Potable Water Plant	✓	✓	
19	ESG #2 - WWTP - Control System Upgrade	✓	✓	
20	ESG #3 - Replace Step Down Transformers		✓	
21	ESG #4 - GENSET Energy Enhancement	✓	✓	
22	ESG #5 - Kitchen Hood - Control (Melink)	✓	✓	
23	ESG #6 - Central Utility Plant		✓	
24	ESG #7 - Install Propane Blending Station		✓	
25	ESG #8 - Building-level Natural Gas Sub-metering		✓	
26	ESG #9 - Replace (4) Bard Units on Building 28		✓	
27	ESG #10 - Building Envelope Upgrades			✓
28	ESG #11 - Retro-Commissioning			✓
29	ESG #12 - Walk-in Freezer Controllers			✓
30	ESG #13 - Replace/Refurbish Existing AHUs and RTUs			✓
31	ESG #14 - Piping Insulation			✓
32	ESG #15 - WWTP Process Improvements			✓
33	ESG #16 - Upgrade Security Systems			✓
34	ESG #17 - Correct Ventilation Issues – Humidity in Many Bathrooms			✓
35	ESG #18 - Upgrade Fire Alarm Systems			✓
36	ESG #19 - Add Emergency Generator			✓
37	ESG #20 - Computerized Maintenance Software			✓
38	ESG #21 - CHP			✓
39	ESG #22 - Replace Refrigeration Units – in warehouse			✓
40	ESG #23 - Solar DHW Heating			✓
41	ESG #24 - Heat Pump DHW Heating			✓
42	ESG #25 - Replace Chiller & Expand CHW loop – Block A, M, and Bldg 4			✓

©2023 Energy Systems Group, LLC

Appendix R Core ECMs not Included in Base Project

ECM #	ECM Description	Explanation
ECM #3	Extend natural gas service to the site from nearby lines	This ECM is included in the Secondary Project to facilitate ESG #6, "Central Utility Plant." It is excluded from Base project for financial reasons.
ECM #4	Convert existing electric resistance heating to natural gas heating	The site upgrades considered in this ECM are included in the Secondary Project as part of ESG #6 "Central Utility Plant". We also explored installing natural gas-fired HVAC equipment as another option. It is excluded from Base project for financial reasons.
ECM #5	Convert existing electric hot water heating to natural gas	The site upgrades considered in this ECM are included in the Secondary Project as part of ESG #6 "Central Utility Plant." We also explored installing natural gas-fired DHW equipment as another option. It is excluded from Base project for financial reasons.
ECM #8	Convert existing rooftop packaged air conditioners to higher efficiency heat pump units, possibly with natural gas for stage second-stage heating;	ESG investigated this option however, it did not prove to be as cost-effective as switching to natural gas as the heating fuel, which was ultimately recommended in the Secondary Project as part of ESG #6 "Central Utility Plant".
ECM #12	Investigate enhanced geothermal power.	Based on the cost of a geothermal power system relative to other options this measure is not considered cost effective. ESG will further investigate the geology of the area during the IGA; currently, ESG is not aware of any high-temperature reservoir in the ground area under the facility.
ECM #13	Convert electric kitchen appliances to natural gas	Due to the high costs of running natural gas to the building, this conversion was not considered cost-effective enough to be included in the Base project; however, ESG has included this ECM in the Secondary project, as the gas line costs are shared between this ECM, and the "Central Utility Plant" ESG #6.
ECM #14	Upgrade the building automation system to provide a centralized campus monitoring and control	ESG did not recommend this ECM as part of the Base project due to the high costs and potential pitfalls of installing new controls on mechanical equipment that is 40+ years old in many cases. ESG is including this ECM in our Secondary project, where site-wide mechanical upgrades will make the controls upgrade more effective and cost-efficient.

©2023 Energy Systems Group, LLC

Core Energy Conservation Measures (from Appendix R)

Note: **Several ECMs listed in Appendix R include controls upgrades and/or HVAC system upgrades, which may** include controls upgrades. For clarity and to ensure that savings are not double counted, some of the HVAC control improvements are assigned to the specific related ECMs and not the controls ECM. Any appropriate and related permitting, electrical, balancing, start-up, and commissioning is included as part of the appropriate ECMs. For brevity, specific controls details may not be listed but any controls needed for functional control are included.

ECM #1 Overview - Install solar panel field utilizing the Inflation Reduction Act (IRA) incentive funds

There are currently no Solar Photovoltaic (PV) systems installed at SCI Mercer. The site has significant land available to install a large Solar PV system. ESG recommends the installation of ground-mounted Solar PV arrays to offset the purchase of electricity from the grid.

ESG does not recommend the direct purchase of the solar PV system for this site, despite the benefits of the Inflation Reduction Act (IRA), SRECs, utility rebates, and other incentives, due to the financial cost/benefit ratio when compared to a Power Purchase Agreement (PPA). ESG investigated the following options as outlined below.

1. Cash Purchase – would be included in project and project financing, but essentially, SCI Mercer would own the array.
2. Community Solar – The land would be licensed to the electric company for solar generation, and SCI Mercer would receive rental income and a lower electric rate.
3. Power Purchase Agreement
    a. With a battery storage system
    b. Without a battery storage system

Ultimately, we broke ECM #1 into two separate possible optimal solutions: 3,500 kWdc Solar PV PPA and 8,000 kWdc Solar PV PPA below:

ECM-1A – 3,500 kWdc Solar PV PPA

A solar power purchase agreement (PPA) is a financial agreement where a developer arranges for the design, permitting, financing, and installation of a solar energy system on a customer's property at little to no up-front cost to DOC. The developer sells the power generated to the host customer at a fixed or escalating rate that is typically lower than the local utility's retail rate. This lower electricity price serves to offset the customer's purchase of electricity from the grid while the developer receives the income from these sales of electricity as well as any tax credits and other incentives generated from the system. PPAs typically range from 15 to 25 years, and the developer remains responsible for the operation and maintenance of the system for the duration of the agreement. At the end of the PPA contract term, a customer may be able to extend the PPA, have the developer remove the system, or choose to buy the solar energy system from the developer. For this project, the PPA would be entered into between the PA DOC/DGS and the PPA provider, and ESG would provide support and coordination throughout the process to:

- Help facilitate and review the agreement between DOC and PPA provider;
- Provide project management during the installation phase; and,
- Assist with confirmation startup, check out, and operation of the system once energized.

ESG estimates a significant Tax Credit between 30% - 40% from the Inflation Reduction Act (IRA) of 2022, which established and extends the Federal Investment Tax Credit (ITC) for solar photovoltaics (PV) systems. This, combined with local utility solar PV incentives, as well as Solar Renewable Energy Credits (SRECs), will go to the PPA provider and contribute to a beneficial PPA electricity rate.

©2023 Energy Systems Group, LLC

ECM-1B – 8,000 kWdc Solar PV PPA

During the IGA, ESG will further investigate the installation of a larger, 8,000 kWdc Solar PV system. This system will leverage the even larger tax credits, SRECs, and utility incentives as the smaller system *but will require special approval by the local utility for interconnection into the grid while still allowing for net metering of the site*. This larger system will be implemented using the same PPA approach, as the PPA provides for more favorable economics while also shifting the maintenance burden onto the PPA provider and away from the facility.

ECM #2 LED Lighting Upgrade

Appendix R of the RFQ includes a measure for facility lighting fixture (interior and exterior building mounted and site lighting) conversion to LED. This measure will address these fixtures. The interior and exterior lighting equipment should be upgraded to LED technology to reduce energy and maintenance costs.

The basic concept used in our design is to provide the best value by providing a balance of the following:

- Based on the application, past PA-specific corrections experience, and ACA standards, select lighting products that ensure appropriate light levels, optimal light distribution and long life.
- Select technology using quality products from reputable manufacturers.
- Provide new LED lighting that is Energy Star and DCL rated to qualify for utility rebates.
- Engineer all solutions to provide cost-effective long-term energy savings to the project.
- Significantly reduce the long-term maintenance required.

As with all correctional facilities, the safety and security of the Institution are paramount and can never be compromised. The exterior lighting systems will be evaluated, and recommendations given that will not only save on energy costs but will also generate operational savings, with the final outcome increasing the safety and security of the facility by achieving appropriate light levels. ESG does not manufacture nor promote specific lighting manufacturers. Therefore, we are completely vendor-neutral concerning all products and equipment used on our projects. This allows ESG to complete investment-grade audits and provide recommendations utilizing only the equipment that best suits the facility. Exterior lighting is one prime example. ESG takes into consideration all exterior lighting systems and designs a holistic approach. Perimeter, wall pack, high mast, and walkway lighting systems are evaluated, and recommendations are given that may utilize many different types of newer technologies or manufacturers to achieve the DOC's overall exterior lighting goals. Better exterior light quality will enable the Corrections Officers and staff to monitor inmate movement, locate contraband, see illicit activities, be able to recognize facial features better for positive identification of both staff and inmates and provide sufficient light levels for the Institution's camera systems. With better light quality, inmates are also less likely to attempt to break rules or regulations.

ESG engineers, overseen by our full-time corrections specialist, will work directly with SCI Mercer to evaluate each fixture independently to ensure the facility receives what is right for that location. ESG's staff has worked extensively in correctional facilities, utilizing many different lighting systems. Our knowledge and experience working with LED, plasma, or other lighting technologies will afford SCI Mercer the opportunity to ensure that the facilities receive solutions that are comprehensive, complete, and optimal for a corrections environment.

©2023 Energy Systems Group, LLC

Existing:

The existing interior lighting system at SCI Mercer is a mixture of fluorescent, HID, and LED technology. The majority of fixtures are linear fluorescent, and approximately 25% have been converted to TLED (tubular LED) using both UL Type A and UL Type B lamps. For consistency and to gain efficiency, we are retrofitting all of the linear fluorescent and TLED fixtures with new Type B TLED lamps. This eliminates the safety concern of multiple wiring methods, reduces future maintenance, and provides a warrantied lighting system throughout the facilities.

During our walk, we noticed that some of the fixtures in the cells had broken lenses. During the IGA, ESG will perform a detailed audit and evaluate the viability of replacing the fixtures.
As is typical in correctional environments, many of the cells have night lights. These are typically low-wattage CFL lamps and will be replaced with a comparable lumen output LED version of the existing lamp.
There are a few areas that were converted to LED using new fixtures. The open pod area in G and the day room in H & N have LED flat panels, the high bays in the activities building and the warehouse building have been converted to LED. There are a handful of wraps, strips, drums, and wall packs that have also been replaced with new LED fixtures. All of these will remain as is.

Exterior lighting is a mix of HID and LED fixtures and corn cobs. The few wall packs that have been replaced with new LED wall packs will remain. Wall packs, flood lights, area lights, etc., that have been retrofitted with a corn cob style LED bulb, will be replaced with a new LED fixture. While this doesn't drive savings, it is a significant improvement in safety as light levels will be increased and light directed much more efficiently to the area being illuminated.

The fence is currently lit with 1000w HID floods, and the poles are over 300' apart. There is also some supplemental lighting from the housing units. We understand the minimum required light level is 1fc and we'll need to run photometry and dive in deeper during the IGA. At this time, ESG is proposing a high-lumen flood light.

The American Correctional Association (ACA) has recommendations for minimum lighting requirements for specific areas throughout a prison complex. ESG's correctional staff will work directly with SCI Mercer and subcontractors to maintain these standards.

ECM #3 Extend New Natural Gas Service

<u>Local Distribution Natural Gas:</u>

The feasibility of obtaining natural gas from the local natural gas distribution company, National Fuel, has been discussed. Appendix 2 – The Utility Baseline Analysis section contains selected pages of National Fuel's rates, rules, and regulations for Mercer County. The proposal consists of extending natural gas service to the SCI Mercer site. Specifically, a four-inch natural gas main exists 4,224 feet North of the site on Route 457. This gas main will be extended to the SCI Mercer site, with a gas meter and service entrance being proposed at or near the substation known as Building 15. The cost of extending the main is dependent on installed gas equipment and the volume of gas consumed. ESG will work and negotiate to extend the main gas service to the SCI Mercer.

The natural gas cost was identified to be $6.00/MCF through DGS Bulletin #5. During the Investment Grade Audit, our hope is that PA DOC with some suggestions from ESG will work with National Fuel to negotiate a preferred rate and tariff. However, at this time, this is the natural gas rate used to generate this proposal as it pertains to Energy Conservation Measures that relate to natural gas use. ESG will also investigate the Monthly Metered Transportation gas rate through National Fuel in combination with a local gas commodity marketer. The Transportation rate structure is traditionally more competitive than the Large Commercial rate.

©2023 Energy Systems Group, LLC

A detailed analysis of the comparison between electric resistance heating, heat pump heating, and the option to convert heating to Natural Gas is outlined in Appendix 3 – Fuel Switch Analysis.

Onsite Natural Gas:
As a potential alternate to the above scope, onsite natural gas has been identified as a potential opportunity. However, this opportunity presents several complicating issues, including Public Utility Commission (PUC) law, DEP regulations, liability, the Commonwealth of Pennsylvania and Federal Laws, and the sustainability of a gas well on site for a minimum of ten years. ESG would be glad to investigate this opportunity further if PA DOC chooses during the Investment Grade Audit.

ECM #4 Convert existing electric resistance heating to natural gas heating (Included in ESG #6 Central Utility Plant)
This measure converts existing electric resistance heating to natural gas. The scopes investigated to accomplish this are noted below.

1. Site:
    A. Establish a new natural gas distribution throughout the complex that includes all trenching and penetrations to the mechanical rooms in buildings 1, 2, 3, 4, 5, A, M, B, C, E, I, J, L, 12, 13, 14, and F.
    B. The gas distribution company will bring a 5 PSI gas service line from the main 4-inch trunk of Route 457 to the outside of Substation Building 15.
2. Building M:
    A. Extend the gas service line from the gas distribution network to the new boiler in Building M's basement mechanical room.
    B. Remove and demo existing Air Handling Unit (AHU)-S1 serving building 4 with new packaged Roof Top Unit (RTU) consisting of Direct Expansion (DX) cooling and gas heat. Disconnect and isolate the AHU-S1 electric heating coil wiring from the emergency generator panels.
    C. Remove existing AHU-S2 and AHU-S3 Multi-Zone (MZ) air handling units and associated Rooftop (RT) condenser in each mechanical room. Disconnect and isolate the control and power wiring for each MZ air handling unit and associated RT unit. Reference the table below for the actual AHU/RT Condenser per building. Disconnect and isolate the electric duct coil in each AHU. Disconnect and isolate the existing AHU heating coil wiring from the emergency generator panels.
    D. Install a new packaged Roof-Top Unit (RTU) with gas heat, DX cooling, and economizer package to replace AHU-S2 and S3. Reuse existing RA and SA ductwork. Furnish and install transition duct to connect RA and SA. Blank-off OA ductwork in the mechanical room. Reconnect the power source to the new packaged RTU.
3. Buildings A, B, C, E, F, I, J, L, 1, 2, 3, 4, 5, 12, and 13:
    A. Abandon in place the existing reciprocating chiller, outside condenser, and the associated pump located in building 5 basement mechanical room. Disconnect and isolate the control and power wiring back to the nearest distribution panel for the existing 71-ton chiller, outside condenser, and associated Chilled Water (CHW) pump in the building five mechanical room.
    B. Remove existing Multi-Zone (MZ) air handling units and associated RT condensers in each mechanical room. Reference the existing equipment list for the actual AHU per building. Disconnect and isolate the control and power wiring for each MZ air handling unit and associated RT unit. Reference table below for the actual AHU/RT Condenser per building. Disconnect and isolate the electric duct coil in each AHU. Disconnect and isolate the existing AHU heating coil wiring from the emergency generator panels.
    C. Install a new packaged Roof-Top Unit (RTU) with gas heat/DX cooling and economizer package. Reuse existing RA and SA ductwork. Furnish and install transition duct to connect RA and SA. Blank-off OA ductwork in the mechanical room. Reconnect the power source to the new packaged RTU.

©2023 Energy Systems Group, LLC

   D. Extend the gas service line from the gas distribution network to new RTUs.

4. Building 4:
   A. Replace the existing three make-up air units and electric duct coils with three gas-fired rooftop make-up air units. Disconnect and isolate the power and controls for the three make air units and associated electric duct coils. Reconnect a power source for three new gas-fired rooftop make-up air units. Disconnect and isolate the existing make-up air unit heating coil wiring from the emergency generator panels.
5. Building 14:
   A. Remove existing Multi-Zone (MZ) air handling unit AHU-7 and single zone units AHU-8, 9E, & 9W and associated RT condenser in each mechanical room. Disconnect and isolate the control and power wiring for each air handling unit and associated RT unit. Disconnect and isolate the electric duct coil in each AHU. Disconnect and isolate the existing AHU heating coil wiring from the emergency generator panels.
   B. Install a new packaged Roof-Top Unit (RTU) with gas heat/DX cooling, and economizer package. Reuse existing Return Air (RA) and Supply Air (SA) ductwork. Furnish and install transition duct to connect RA and SA. Blank-off OA ductwork in the mechanical room. Reconnect the power source to the new packaged RTU.
   C. Replace Unit Ventilator (UV)-1 and Room Air Conditioner (RAC)-1 units with a new packaged single zone RTU with gas heat/DX cooling and economizer. Disconnect and isolate the control and power wiring for UV-1 and RAC-1 units. Provide a new power source for the two new gas-fired rooftop units.
6. Provide curb adapter, roof cutting, and patching for the RTUs.
7. Air balancing is to be provided for all new equipment.
8. Testing, startup, and commissioning
9. Training

©2023 Energy Systems Group, LLC

New Unit Number	Building	Existing Unit Designation	Size	Proposed Manufacturer	Base+
ROOFTOP UNITS					
RTU-1	1	AHU-1	75 ton	York	New Gas Fired DX Packaged RTU
RTU-2	2	AHU-2		York	New Gas Fired DX Packaged RTU
RTU-3	5	AHU-3		York	New Gas Fired DX Packaged RTU
RTU-4	3	AHU-4		York	New Gas Fired DX Packaged RTU
RTU-5	4	AHU-5		York	New Gas Fired DX Packaged RTU
RTU-6	4	AHU-6	10 hp	York	New Gas Fired DX Packaged RTU
RTU-7	14	AHU-7	10 ton	York	New Gas Fired DX Packaged RTU
RTU-8	14	AHU-8	6 ton	York	New Gas Fired DX Packaged RTU
RTU-9	14	AHU-9E	10 hp	York	New Gas Fired DX Packaged RTU
RTU-10	14	AHU-9W	10 hp	York	New Gas Fired DX Packaged RTU
RTU-11	14	UV-1, RAC-1	2.4 ton	York	New Gas Fired DX Packaged RTU
RTU-12	13	AHU-10	28 ton	York	New Gas Fired DX Packaged RTU
RTU-13	12	AHU-11	16 ton	York	New Gas Fired DX Packaged RTU
RTU-14	B	AHU-12A	16 ton	York	New Gas Fired DX Packaged RTU
RTU-15	J	AHU-12B	16 ton	York	New Gas Fired DX Packaged RTU
RTU-16	C	AHU-13A	16 ton	York	New Gas Fired DX Packaged RTU
RTU-17	L	AHU-13B	16 ton	York	New Gas Fired DX Packaged RTU
RTU-18	I	AHU-14	16 ton	York	New Gas Fired DX Packaged RTU
RTU-19	E	AHU-15	16 ton	York	New Gas Fired DX Packaged RTU
RTU-20	A	S-6	39 ton	York	New Gas Fired DX Packaged RTU
RTU-21	F	S-4	39 ton	York	New Gas Fired DX Packaged RTU
RTU-22	F	S-5	39 ton	York	New Gas Fired DX Packaged RTU
S3	M	S-3	15 ton	York	New Gas Fired DX Packaged RTU
S2	M	S-2	15 ton	York	New Gas Fired DX Packaged RTU
S1	4	S-1	36 ton	York	New Gas Fired H&V
RTU-23	4	RTU-1	12 ton	York	New Gas Fired DX Packaged RTU
RTU-24	F	RTU-2	4 ton	York	New Gas Fired DX Packaged RTU
RTU-25	F	RTU-3	4 ton	York	New Gas Fired DX Packaged RTU
RTU-26	A	RTU-4	4 ton	York	New Gas Fired DX Packaged RTU
RTU-27	4	MUA-2	5 hp	York	New Gas Fired H&V
RTU-28	4	MUA-3	5 hp	York	New Gas Fired H&V
RTU-29	4	MUA-4	3 hp	York	New Gas Fired H&V

©2023 Energy Systems Group, LLC

ECM # 5 Convert existing electric hot water heating to natural gas (Included in ESG#1 Central Utility Plant)
This measure converts existing electric hot water heating to natural gas. The scopes investigated to accomplish this are noted below.

1. Site:
    A. Establish a new natural gas distribution throughout the complex that includes all trenching and penetrations to the mechanical rooms in buildings 1, 2, 3, 4, 5, A, M, B, C, E, I, J, L, 12, 13, 14, and F.
    B. The gas distribution company will bring a 5 PSI gas service line from the main 4-inch trunk of Route 457 to the outside of Substation Building 15.
2. Building M:
    A. Extend the gas service line from the gas distribution network to the new boiler in Building M's basement mechanical room.
    B. Replace the electric water heater with a new gas-fired Domestic Hot Water (DHW) boiler. Reuse existing tanks in each building for DHW storage. Install gas vents and combustion air to new units. Connect gas service lines as required. Disconnect and isolate the existing 480 Vac 3-phase electric DHW heater.
3. Buildings A, B, C, E, F, I, J, L, 1, 2, 3, 4, 5, 12, and 13:
    A. Replace the electric water heater with a new gas-fired DHW boiler. Reuse existing tanks in each building for DHW storage. Install gas vents and combustion air to new units. Install gas service lines as required. Disconnect and isolate the existing 480 Vac 3-phase electric DHW heater.
4. Testing, startup, and commissioning
5. Training

©2023 Energy Systems Group, LLC

DOMESTIC HOT WATER HEATERS					
DHW-1	1	1	30gal	Lockenvair	New Gas Fired Hot Water Heater
DHW-2	2	2	30gal	Lockenvair	New Gas Fired Hot Water Heater
DHW-3	5	3	30gal	Lockenvair	New Gas Fired Hot Water Heater
DHW-4	3	4	170gal	Lockenvair	New Gas Fired Hot Water Heater
DHW-5	12	6	40gal	Lockenvair	New Gas Fired Hot Water Heater
DHW-6	13	7	40gal	Lockenvair	New Gas Fired Hot Water Heater
DHW-7	B	8	170gal	Lockenvair	New Gas Fired Hot Water Heater
DHW-8	J	9	170gal	Lockenvair	New Gas Fired Hot Water Heater
DHW-9	C	10	170gal	Lockenvair	New Gas Fired Hot Water Heater
DHW-10	L	11	170gal	Lockenvair	New Gas Fired Hot Water Heater
DHW-11	I	12	170gal	Lockenvair	New Gas Fired Hot Water Heater
DHW-12	C	13	170gal	Lockenvair	New Gas Fired Hot Water Heater
DHW-13	A	1	170gal	Lockenvair	New Gas Fired Hot Water Heater
DHW-14	A	2	170gal	Lockenvair	New Gas Fired Hot Water Heater
DHW-15	F	3	170gal	Lockenvair	New Gas Fired Hot Water Heater
DHW-16	F	4	170gal	Lockenvair	New Gas Fired Hot Water Heater
DHW-17	F	5	170gal	Lockenvair	New Gas Fired Hot Water Heater
DHW-18	F	6	170gal	Lockenvair	New Gas Fired Hot Water Heater
DHW-19	M	7	120gal	Lockenvair	New Gas Fired Hot Water Heater
DHW-20	M	8	120gal	Lockenvair	New Gas Fired Hot Water Heater
DHW-21	4	9	500gal	Lockenvair	New Gas Fired Hot Water Heater
DHW-22	4	10	500gal	Lockenvair	New Gas Fired Hot Water Heater
DHW-23	4	11	10gal	Lockenvair	New Gas Fired Hot Water Heater
DHW-24	4	12	30gal	Lockenvair	New Gas Fired Hot Water Heater
DHW-25	14	13	500gal	Lockenvair	New Gas Fired Hot Water Heater
DHW-26	14	14	500gal	Lockenvair	New Gas Fired Hot Water Heater

©2023 Energy Systems Group, LLC

ECM # 6 Water Conservation of Domestic Plumbing Fixtures

Appendix R of the RFQ includes a measure for water conservation. Plumbing fixtures offer good water-saving opportunities because many of these fixtures can be retrofitted to reduce the amount of water consumed per flush (toilets and urinals) or per minute of use (sinks and showers). Reducing sink and shower water usage also saves the thermal energy used to make hot water.

Toilets – Each outlined high-volume water closet will be replaced with a 1.28 gpf porcelain toilet and a new flush valve. Regarding existing floor-mounted toilets, all broken floor flanges will be repaired. In the event a floor flange is beyond repair, a "repair flange" will be installed before the new retrofit. Wall toilets will receive a new neoprene gasket prior to installation. The existing Water Closet flush valve will be removed from the angle stop to the closet spud connection, and the new valve will be installed. New tank-type toilets will also receive a new stainless steel braided supply hose. Each new toilet (not including I-CON retrofit) will receive a new toilet seat.

Lavatory (faucet and kitchen) Aerators – High Consumption inmate lavatories and dietary areas will receive new 0.5 gpf low consumption, vandal-resistant aerators as applicable to the fixture's designated use. For kitchen/breakroom style fixtures, 1.5 gpm aerators will be installed.

Shower Nozzles – Retrofit the existing high volume shower nozzles with new 1.5 gpm low consumption vandal resistant nozzles. The proposed nozzle will be all metal construction and designed for correctional use.

	Low Consumption Commercial Porcelain Toilet and Flush Valve	Low Consumption Vandal Resistant Faucet Aerator	Low Consumption Vandal Resistant Kitchen Aerator	Low Consumption Vandal Resistant Shower Nozzle
1 Administration		15		
2 Deputy/Visit/Control	12	15		
3 Medical	4	4		
3A Housing Unit	4	6		4
4 Dietary/Maintenance/R&D	4	4		
5 Parole	2	2		
12 Barbershop	4	5		
14 Activities	8	8		
Misc. Buildings	22	26		
A Housing Unit	1	1		6
B Housing Unit	1	1		8
C Housing Unit	1	1		8
E Housing Unit	1	1		8
F Housing Unit	1	1		12
G Housing Unit	17	25	8	16
H Housing Unit		1		18
I Housing Unit	1	1		8
J Housing Unit	1	1		8
L Housing Unit	1	1		8
M Housing Unit	1	1		4
N Housing Unit		1		18
Grand Total	86	12	8	126

ECM #7 – Controls Upgrade – Water Systems

ESG proposes the installation of I-CON or similar controls on the toilet flush valves and flow-reducing showerheads. I-CON Systems retrofits for penal fixtures include flush valve flow control and programmable electronic controls to limit the frequency of fixture use, thus conserving water. The I-CON system comprises two major components: the sensor and the controller.

©2023 Energy Systems Group, LLC

The force-activated touch sensor is electronic, with no moving parts, and is virtually vandal-proof due to its rugged, stainless-steel housing. The sensor's design has been tested for over 1 million prison activations. The controller is an electronic device that manages the operation of flush valves. When an input signal is received from a sensor, the controller sends an output signal to the solenoid directing it to open the valve it is attached to and then to close the valve again after a pre-programmed time.

Retrofit Description	A	B	C	E	F	G	H	I	J	L	M	N	Total
I-CON Electronic Flush Valve	50	29	29	29	100		128	29	29	29	30	128	**610**
I-CON Computer Control	1				1						1		**3**
I-CON Electronic Shower Valve	6	8	8	8	12	16	18	8	8	8	4	18	**122**

I-CON Flush Valves

The designated inmate cell toilets will receive I-CON electronic flush valves. The primary savings associated with the I-CON flush valve is produced by increasing the volumetric rate of the bowl's flush to clear the bowl more effectively in a shorter duration of time than a standard diaphragm flush valve. The second source of water reduction by the flush valve comes from the controller's adjustable lockout time settings. This lockout has been developed specifically to modify inmate behavior by deterring abuse of the toilet fixture and plumbing system. The general program will not allow more than one flush within a five-minute period; otherwise, the second flush will result in a one-hour lockout. While restrictive, this lockout program allows for over 250 flushes per day. Lockout generally applies to toilets, and an LED activation button will be installed to display red when pressed to indicate that the toilet is in lockout. The button also displays other patterns and colors, such as green, to assure the user that the controller has accepted the usage request or that the water hammer arresting feature is activated. To reduce maintenance, either corrosion-resistant metallic or non-metallic outlet connections will be utilized.

Computer Controls A, F, M

I-CON Computer Monitoring and Control System (Envisage) – Upgrade the I-CON controllers in the Scope of Work located in the outlined housing units to communicate and install one touchscreen control computer in the housing unit's control area.

I-CON Electronic Shower Valves

I-CON Showers Valves – The I-CON electronic shower valve will be installed on the inmate showers. Each I-CON shower valve solenoid will activate a single showerhead. When there are multiple showerheads, such as an ADA shower panel, an I-CON shower valve solenoid will be used for each showerhead. Before installation, the facility may state a lockout duration if desired.

ECM #8 – Convert Existing HVAC units to Heat Pump (Included in ESG #6 Central Utility Plant)

1. Building M:
   A. Remove and demo the existing Air Handling Unit (AHU)-S1 along with the electric heating coil serving building 4 with a new packaged Roof Top Unit (RTU) heat pump. Disconnect and isolate the existing AHU heating coil wiring. Reuse existing electrical for the new unit from the emergency generator panels.
   B. Remove existing AHU-S2 and AHU-S3 Multi-Zone (MZ) air handling units and associated Rooftop (RT) condenser in each mechanical room. Disconnect and isolate the control and power wiring for each MZ air handling unit and associated RT unit. Reference table below for the actual AHU/RT Condenser per building. Disconnect and isolate the electric duct coil in each AHU. Disconnect and isolate the existing AHU heating coil wiring. Reuse existing electrical for the new unit from the emergency generator panels.

©2023 Energy Systems Group, LLC

   C. Install a new packaged Heat Pump Roof-Top Unit (RTU) with an economizer package to replace AHU-S2 and S3. Reuse existing RA and SA ductwork. Furnish and install transition duct to connect RA and SA. Blank-off Outside Air (OA) ductwork in the mechanical room. Reconnect the power source to the new packaged RTU.
   D. Replace the electric hot water heater with a new heat pump DHW system.

2. Buildings A, B, C, E, F, I, J, L, 1, 2, 3, 4, 5, 12, and 13:
   A. Abandon in place the existing reciprocating chiller, outside condenser, and the associated pump located in building 5 basement mechanical room. Disconnect and isolate the control and power wiring back to the nearest distribution panel for the existing 71-ton chiller, outside condenser, and associated CHW pump in the building 5 mechanical room.
   B. Remove existing Multi-Zone (MZ) air handling units and associated RT condensers in each mechanical room. Reference the existing equipment list for the actual AHU per building. Disconnect and isolate the control and power wiring for each MZ air handling unit and associated RT unit. Reference table below for the actual AHU/RT Condenser per building. Disconnect and isolate the electric duct coil in each AHU. Disconnect and isolate the existing AHU heating coil wiring from the emergency generator panels.
   C. Install a new packaged Heat Pump Roof-Top Unit (RTU) with an economizer package. Reuse existing RA and SA ductwork. Furnish and install transition duct to connect RA and SA. Blank-off OA ductwork in the mechanical room. Reconnect the power source to the new packaged RTU.
   D. Replace the electric hot water heater with a new heat pump DHW system.

3. Building 4:
   A. Replace the existing three make-up air units and electric duct coils with three heat pump rooftop make-up air units. Disconnect and isolate the power and controls for the three make air units and associated electric duct coils. Reconnect a power source for three new gas-fired rooftop make-up air units. Disconnect and isolate the existing make-up air unit heating coil wiring from the emergency generator panels. The cooling side of the heat pump will be turned off.
4. Building 14:
   A. Remove existing Multi-Zone (MZ) air handling unit AHU-7 and single zone units AHU-8, 9E, & 9W and associated RT condenser in each mechanical room. Disconnect and isolate the control and power wiring for each air handling unit and associated RT unit. Disconnect and isolate the electric duct coil in each AHU. Disconnect and isolate the existing AHU heating coil wiring. Reuse existing electrical for the new unit.
   B. Install a new packaged Heat Pump Roof-Top Unit (RTU) with an economizer package. Reuse existing RA and SA ductwork. Furnish and install transition duct to connect RA and SA. Blank-off OA ductwork in the mechanical room. Reconnect the power source to the new packaged RTU.
   C. Replace UV-1 and RAC-1 units with a new packaged heat pump RTU with an economizer. Disconnect and isolate the control and power wiring for UV-1 and RAC-1 units. Reuse electrical for the new units.
5. Provide curb adapter, roof cutting, and patching for the RTUs.
6. Air and water balancing for all new equipment.
7. Testing, startup, and commissioning
8. Training

©2023 Energy Systems Group, LLC

New Unit Number	Building	Existing Unit Designation	Size	Proposed Manufacturer	Base
ROOFTOP UNITS					
RTU-1	1	AHU-1	75 ton	York	New Air Source Heatpump
RTU-2	2	AHU-2		York	New Air Source Heatpump
RTU-3	5	AHU-3		York	New Air Source Heatpump
RTU-4	3	AHU-4		York	New Air Source Heatpump
RTU-5	4	AHU-5		York	New Air Source Heatpump
RTU-6	4	AHU-6	10 hp	York	New Air Source Heatpump
RTU-7	14	AHU-7	10 ton	York	New Air Source Heatpump
RTU-8	14	AHU-8	6 ton	York	New Air Source Heatpump
RTU-9	14	AHU-9E	10 hp	York	New Air Source Heatpump
RTU-10	14	AHU-9W	10 hp	York	New Air Source Heatpump
RTU-11	14	UV-1, RAC-1	2.4 ton	York	New Air Source Heatpump
RTU-12	13	AHU-10	28 ton	York	New Air Source Heatpump
RTU-13	12	AHU-11	16 ton	York	New Air Source Heatpump
RTU-14	B	AHU-12A	16 ton	York	New Air Source Heatpump
RTU-15	J	AHU-12B	16 ton	York	New Air Source Heatpump
RTU-16	C	AHU-13A	16 ton	York	New Air Source Heatpump
RTU-17	L	AHU-13B	16 ton	York	New Air Source Heatpump
RTU-18	I	AHU-14	16 ton	York	New Air Source Heatpump
RTU-19	E	AHU-15	16 ton	York	New Air Source Heatpump
RTU-20	A	S-6	39 ton	York	New Air Source Heatpump
RTU-21	F	S-4	39 ton	York	New Air Source Heatpump
RTU-22	F	S-5	39 ton	York	New Air Source Heatpump
S3	M	S-3	15 ton	York	New AHU with Heatpump (Condensor & Coil)
S2	M	S-2	15 ton	York	New AHU with Heatpump (Condensor & Coil)
S1	4	S-1	36 ton	York	New Air Source Heatpump (No cooling)
RTU-23	4	RTU-1	12 ton	York	New Air Source Heatpump
RTU-24	F	RTU-2	4 ton	York	New Air Source Heatpump
RTU-25	F	RTU-3	4 ton	York	New Air Source Heatpump
RTU-26	A	RTU-4	4 ton	York	New Air Source Heatpump
RTU-27	4	MUA-2	5 hp	York	New Air Source Heatpump (No cooling)
RTU-28	4	MUA-3	5 hp	York	New Air Source Heatpump (No cooling)
RTU-29	4	MUA-4	3 hp	York	New Air Source Heatpump (No cooling)

©2023 Energy Systems Group, LLC

DOMESTIC HOT WATER HEATERS					
DHW-1	1	1	30gal	Lockenvair	HP Water Heater
DHW-2	2	2	30gal	Lockenvair	HP Water Heater
DHW-3	5	3	30gal	Lockenvair	HP Water Heater
DHW-4	3	4	170gal	Lockenvair	HP Water Heater
DHW-5	12	6	40gal	Lockenvair	HP Water Heater
DHW-6	13	7	40gal	Lockenvair	HP Water Heater
DHW-7	B	8	170gal	Lockenvair	HP Water Heater
DHW-8	J	9	170gal	Lockenvair	HP Water Heater
DHW-9	C	10	170gal	Lockenvair	HP Water Heater
DHW-10	L	11	170gal	Lockenvair	HP Water Heater
DHW-11	I	12	170gal	Lockenvair	HP Water Heater
DHW-12	C	13	170gal	Lockenvair	HP Water Heater
DHW-13	A	1	170gal	Lockenvair	HP Water Heater
DHW-14	A	2	170gal	Lockenvair	HP Water Heater
DHW-15	F	3	170gal	Lockenvair	HP Water Heater
DHW-16	F	4	170gal	Lockenvair	HP Water Heater
DHW-17	F	5	170gal	Lockenvair	HP Water Heater
DHW-18	F	6	170gal	Lockenvair	HP Water Heater
DHW-19	M	7	120gal	Lockenvair	HP Water Heater
DHW-20	M	8	120gal	Lockenvair	HP Water Heater
DHW-21	4	9	500gal	Lockenvair	HP Water Heater
DHW-22	4	10	500gal	Lockenvair	HP Water Heater
DHW-23	4	11	10gal	Lockenvair	HP Water Heater
DHW-24	4	12	30gal	Lockenvair	HP Water Heater
DHW-25	14	13	500gal	Lockenvair	HP Water Heater
DHW-26	14	14	500gal	Lockenvair	HP Water Heater

©2023 Energy Systems Group, LLC

ECM #9 Existing Chiller Upgrade (Included in ESG#6 Central Utility Plant)

There is a 71-ton chiller in the basement of Building 5 with a dual compressor evaporator. The air-cooled condenser is located outside in an enclosure. Circulation pumps supply chilled water to the air handlers in buildings 1, 2, 3, 4, and 5 via a 3-inch line that runs north of the mechanical room. The primary chilled water loop consists of a 4-inch line.

Buildings 1, 2, 3, 4, 5:

A. Remove and demo an existing split system chiller consisting of the inside unit (evaporator and compressors), outside condenser, refrigeration lines, and the associated pumps located in building 5 basement mechanical room. Disconnect and isolate the control and power wiring.

B. Remove refrigerant lines
C. Reclaim refrigerant as per State and Local code
D. Disconnect existing chiller water piping from the old chiller. Existing chilled water piping to remain and be reused.
E. Furnish and install one new 75-ton packaged high-efficiency air-cooled screw or scroll chiller (York, Trane)
F. Furnish and install new pumps in-kind (installed in the same location as existing ones)
G. The chiller is to be installed outside in the fenced area where the old condenser is located
H. Disconnect and reconnect electrical service. Upgrade electrical as required for the new chiller
I. Furnish and install new chilled water piping from the new chiller to the building 5 basement with associated components and valves
J. Connect new piping to the existing chilled water distribution piping
K. Excavation and backfill
L. Connect existing piping to the chiller and the pumps
M. Startup, commissioning, and balancing

ECM #10 Investigate upgrade of existing geothermal system to increase system efficiency

The main Administration building and entrance outside the security fence are heated and cooled by a ground-couple water source heat pumps (i.e., geothermal) system. This was designed and built from the ground up when the building was constructed. There is a 48-bore hole system under the parking lot just west of the main road. Water source heat pumps (WSHP) are located in the ceiling and provide heating and cooling. The WSHPs are likely using R-22 which is a refrigeration that is no longer manufactured and are less efficient than newer units. Ventilation air is designed to be provided to the spaces by a WSHP makeup air unit (MAU) that is not being operated due to it freezing in the winter. Electric ceiling panels are located above each window and are operated by an independent thermostat. ESG will investigate options to increase the efficiency and reduce the electrical usage of the existing geothermal system by means of control settings and schedule changes, verifying equipment operation and accuracy. ESG will validate that the existing design of the geothermal system is consistent with current geothermal design philosophy and verify that both the water and air side systems are operating in accordance with the design parameters. ESG also discovered operational issues of the Administration Building geothermal Energy Recovery Unit (ERU), causing system inefficiency and inadequate heating capabilities. We will investigate the root causes of these issues to determine potential solutions.

ECM # 11 Geothermal heating and cooling

ESG is recommending installing a geothermal heat pump system at the Sally Port building. The Sally Port building is a good candidate as it is located on the fence line and the geothermal field could be installed outside of the fence. A geothermal heat pump and field will be installed to serve this building and the existing system will be removed. The current estimate is for a 4-ton unit. However, this size will be finalized with a load calculation during the Investment Grade Audit.

©2023 Energy Systems Group, LLC

Additional buildings will be explored for geothermal system opportunities during the IGA.

There are an additional significant number of options available to expand or install a new ground-coupled water source heat pump (i.e., geothermal) system and there is significant land available. An expansion of geothermal usage would be impacted by the Central Utility Plant ECM. Either individual buildings could be considered for geothermal or a central geothermal system could be considered. An analysis of these options will be explored during the Investment Grade Audit. These systems can range from individual building systems, expanding the existing system, or a large multi-building system. However even with significant government incentives such as the Inflation Reduction Act of 2022 that provide incentives up to 50% of the costs, a geothermal heat pump system at this location may not be cost-effective relative to other systems. Potential options include:

1. Expand Admin support building – likely then mix with existing loop for energy mixing/recovery
2. Add a loop to individual buildings
3. Add a large system going to multiple buildings

ECM #12 Geothermal Power

Geothermal power plants draw fluids from underground reservoirs to the surface to produce steam. This steam then drives turbines that generate electricity. Based on the cost of a geothermal power system relative to other options this measure is not cost effective. ESG will further investigate the geology of the area during the IGA; currently, ESG is not aware of any high-temperature reservoir in the ground area under the facility. The Pennsylvania Public Utility Commission (PAPUC) website states, “Geothermal electricity is currently not a practical option in Pennsylvania.” This technology however can be future evaluated during the IGA if desired.

ECM #13 Convert Kitchen Appliances to Natural Gas

As part of an alternate fuel source/fuel switch, ESG has included the replacement of fourteen various kitchen appliances in Building 4 – Food Services. Below is a schedule of the new kitchen units and shows which unit will be replaced. New natural gas service lines will be run to each of the new pieces of appliances.

The existing electric kitchen equipment will be disconnected. The electrical service will be reused or terminated back to the panel. The general scope includes:

- Removal and demo of existing equipment
- Delivery and setting in place of new gas equipment
- The final connection to the natural gas pipeline and electrical outlets

Table 1: New Kitchen Equipment Schedule

Quantity	New Equipment	Size	Replaces
3	Kettle, Tilting, Gas	40 gallons	Kettles
3	Tilting Skillet, Gas	40 gallons	Braising Pans
1	Kettle, Tilting, Gas	60 gallons	Conventional Steamer
5	Double Deck Gas Ovens	60000 BTU	Conventional Ovens
2	Donut Fryers, Gas	90 #	Donut Fryers
1	Fire Suppression System		FSS - Hot Food Prep Area
1	Fire Suppression System		FSS - Bakery Area

©2023 Energy Systems Group, LLC

ECM #14 Existing Building Automation System Upgrade – HVAC System

ESG proposes a new Tridium Niagara open protocol energy management system consisting of a new front-end operator workstation located in building M - facility manager's office. The existing Johnson Controls system will be upgraded with new Niagara controllers. We will utilize existing wiring and field devices and replace any as required to provide a fully functional system. The existing pneumatics will be demoed and upgraded with new JACE and BacNet controls. Furnish and install BacNet IP/MSTP router to communicate with the controllers.

Admin Building #1 (Ground Source Heat Pump) – Furnish and install one JACE controller and BacNet controller to replace existing controls. Furnish and install new field devices, sensors, and gauges.

Main Admin Building #1 - Furnish and install one JACE controller and BacNet controller to replace existing controls. Furnish and install new field devices, sensors, and gauges. Provide BacNet communication to the new chiller and the pumps.

Building #2, 3, 4, 5, 12, 14, 17, 23, 29, 30, and Sally Port – Furnish and install BacNet controller to replace existing controls. Furnish and install new field devices, sensors, and gauges.

Building #A, B, C, D, E, F, G, H, I, J, L, M, and N – Furnish and install one JACE controller and BacNet controller to replace existing controls. Furnish and install new field devices, sensors, and gauges.

Typical for Rooftop Package Units with Gas Heat:

- Install and wire Factory provided space temperature sensors and miscellaneous factory-provided sensors
- Furnish and install BacNet Communication to Factory provided controls.
- Furnish and install (1) BacNet Controller with enclosure and 24v power supply.
- Furnish and install interlocking relays for exhaust fans and supply fan control and smoke evacuation control.
- Furnish and install CTs for exhaust fan status.
- Wire smoke detector interlock and status.

Typical for Existing Chill Water Air Handler:

- Furnish and install (1) BacNet Controller with enclosure and 24v power supply.
- Furnish and wire (1) Chill Water Valve with modulating actuator
- Furnish and install Supply Air, Mixed Air and Return Air temperature sensors.
- Furnish and install enable relay and Current Transformer (CT) for supply and return fans.
- Furnish and install (1) space temperature sensor with LCD display.
- Furnish and install outdoor and mix air damper actuators.
- Furnish and install electric heat enable relays.

Existing Water Source Heat Pump Loop:

- Demo existing controls.
- Furnish and install (1) BacNet controller with enclosure and 24v power supply.
- Furnish and install (4) loop temperature sensors – (existing wells within piping).
- Furnish and install (2) pump Variable Frequency Drives (VFDs) to enable relays and CTs.
- Furnish and wire (1) loop differential pressure transmitter
- Furnish and wire (1) modulating loop bypass valve with actuator
- Furnish and install (1) outside air temperature and humidity sensor.

©2023 Energy Systems Group, LLC

Existing Water Source Heat Pumps:

- Furnish and install (1) BacNet Controller with enclosure and 24v power supply.
- Furnish and install Supply Air temperature sensors.
- Furnish and install enable relay and CT for supply fan.
- Furnish and install (1) space temperature sensor with LCD display.
- Furnish and wire (1) condenser water isolation valve.

Chiller and Pumps:

- Furnish and install BacNet controller with enclosure and 24v power supply.
- Furnish and install BacNet communication to Chiller and (2) Pump VFDs.
- Furnish and wire (4) water temperature sensors.
- Furnish and install enable relays and CTs for chiller and pumps.

ECM #16 Electric Vehicle Charging Station

Install one (1) Level 2 Electric Vehicle (EV) charging station. Installing these charging stations will demonstrate DGS and DOC's acknowledgment of the significant role that EVs will play in PA's transportation future, as recognized by PA DEP and other agencies in the state. Additionally, it will demonstrate support of the Governor's Executive Order 2019-01 directing the replacement of 25 percent of the state passenger car fleet with battery-electric and plug-in electric hybrid cars by 2025. No energy savings have been assumed for the purposes of this proposal. However, additional revenue can be generated by charging the consumers for the use of these stations, if so desired, with the addition of supporting technology. The following is the Scope of Work for each location:

- Provide (1) Level 2 EV Charging Stations with dual charging heads. This will result in a total of 2 charging heads.
- New Charging will be Clipper-Creek 32-amp variety or equivalent per pole. The basis of design is the Share2 Enabled HCS-40 EVSE Bundle that allows a single vehicle to charge at 32 amps or two cars to charge simultaneously at 16 amps.
- An integral cumulative kWh meter will be included at each location.
- Provide a new breaker for each charger in the existing branch circuit panel.
- Provide sign and dedicated parking space allocation

ECM #17 Replace the Main Transformer

The electric company delivers a single overhead 69 kV feeder to the institution. The 69kV service feeds into a 69kV fused cutout and then into a single 3750 kVA-67kV-12470/7200V – Delta/Wye -3 Phase – 4 Wire oil-filled pad-mounted distribution transformer.

The facility has four services delivered by Penn Power: the main facility 69kV service, two general three-phase services for the outside buildings, and a general street lighting circuit.

©2023 Energy Systems Group, LLC

The primary transformer is old and at the end of life and is in need of replacement, according to the SCI Mercer Staff. **ESG will replace the 3,750 KVA primary transformer** and further investigate the replacement of the 17 additional outdoor transformers during the IGA.

Additional Transformers to Investigate in IGA

Size (KVA)	Quantity
750	2
1,500	1
150	6
300	5
500	3

Provide Material and labor to replace the Main Transformers. The following Items are Included in Pricing:

- Disconnect & Remove the Existing 3,750KVA main transformer
- Furnish and install a new transformer and reconnect existing cables
- Provide means of erecting equipment for moving transformers Off and Back on existing pads

ECMs not listed in Appendix "R", developed by ESG and included in the Project

ESG #1 Potable Water and Filtration Plant

ESG determined the feasibility of constructing a new Potable Water Filtration Plant on-site in lieu of purchasing domestic water from the local water authority.

This solution contains a provision for the construction and operation of a new potable water filtration facility to replace the public water supply currently provided by Aqua Pennsylvania, Inc. (Aqua). Water charges over the past 23 months averaged $470,038 per year with an average use of 139,857 gallons per day (gpd). The most recently provided 12 months of water usage shows an annual usage of 52,460 thousand gallons at a cost of $507,253 at an average daily usage of 144,917 gpd. The maximum monthly usage was in November 2022 at 4920 k-gal, equating to an average daily usage of 169,655 gpd. We know that iron and manganese are common problems in the Mercer area and some sort of filtration is required. Further water quality information will need to be obtained during the IGA to better define treatment requirements.

For the purpose of this proposal, we assume that the treatment required will consist of iron and manganese removal and chlorination. No other treatment is assumed to be required; however, due to the problematic nature of groundwater in the Mercer area and the rapid development of new drinking water regulations, additional treatment measures may be required and if so, will be included in the IGA.

We propose for a new 500,000-gallon tank to provide domestic, emergency, and fire storage. We assume that this storage quantity will be suitable and that the tank will be designed at an elevation that will provide all domestic and fire service needs without supplemental fire service pumping. To provide the required pressures we assume that the elevated storage tank will be sufficient. The supplemental feed will still be provided by Aqua as a backup for the fire service.

Based on these assumptions the primary elements of the new water supply and treatment system are:

- Drilling, testing, and developing two new wells with a capacity of 160 gpm, each
- Piping to connect the wells and to the new filtration facility
- A new treatment facility includes:
    - Iron and manganese filters
    - Chlorination facilities for oxidation and disinfection
    - Plant laboratory

©2023 Energy Systems Group, LLC

  - Electrical service and distribution
  - Lighting
  - Heating and ventilation
  - Sanitary facilities
  - Control systems and alarms
- A small treated water storage basin (Clearwell) and high-service pumps
- A new 500,000-gallon elevated tank
- Piping to connect the tank and plant to the existing facility
- Grading, paving, fencing, and other site work
- Process waste piping to deliver the backwash water to the existing wastewater plant for treatment.

A new Public Water Supply Permit would be required from PA DEP, which will be developed and applied for during the IGA. The new plant will also need a certified operator to run the facility, which is included in the overall economic analysis of this measure. Although the plant could be manned by inmate staff most of the day, the certified operator would need to be available at all times for consultation and review of operations. We have assumed at a minimum that the operator at the wastewater plant could be certified and his time would be shared. The operation of the plant would require additional electric power as well, which is also included in the overall economic analysis.

ESG #2 Waste Water Treatment Plant Controls System Upgrade

The existing Waste Water Treatment Plant (WWTP) controls are obsolete and present a potential risk of failure, resulting in overall facility operations shutdown. In addition, the Institution spends overtime labor in monitoring the system due to the lack of an alarm capability.

As part of this recommendation, the existing PLC/SCADA System will connect to a Tridium supervisory panel to monitor critical alarms such as pump failures, temperature out of range, and override conditions within the SCADA controls. The main controllability and functionality will still reside in the PLC/SCADA system. The associated controls will be dry contacts. This measure will also install monitoring and alarm capabilities in the laboratory. The scope will incorporate the following upgrades:

Control Panel #1

- Provide and install (1) NEMA-4X Stainless Steel control panel with BacNet IP controller with I/O modules and dedicated 24v power supply.
- Provide and install IDEAC relays and Current Transformers (CTs) to monitor status conditions, failures, and Hand-Off-Auto (H-O-A) switch positions.

Control Panel #2

- Provide and install (1) NEMA-4X Stainless Steel control panel with BacNet IP controller with I/O modules and dedicated 24v power supply.
- Provide and install IDEAC relays and CTs to monitor status conditions, failures, and H-O-A switch positions.
- Provide and install (6) temperature sensors to be mounted next to the existing sensors for monitoring

Control Panel #3

- Provide and install (1) NEMA-4X Stainless Steel control panel with BacNet IP controller with I/O modules and dedicated 24v power supply.
- Provide and install IDEAC relays and CTs to monitor status conditions, failures, and H-O-A switch positions.

Miscellaneous Exhaust Fans & Unit Heaters:

- Provide and install (1) NEMA-4X Stainless Steel control panel with BacNet IP controller with I/O modules and dedicated 24v power supply.
- Provide and install (3) RIB relays and CTs for exhaust fan enable and status.
- Provide and install (3) RIB Relays and CTs for Unit Heater enable and status.
- Provide and install (3) space temperature sensors for unit control.

©2023 Energy Systems Group, LLC

Wiring:

- Wiring above accessible ceiling shall be run with plenum-rated cable
- Exposed, will be run in conduit sleeves, electrical boxes flex conduits
- Outdoor, will be run in weatherproof conduit, seal-tight fittings, NEMA-12 enclosures

ESG #3 Replace Step-Down Transformers (480V and below) with High-Efficiency Transformers

Typical transformers are not designed to handle the non-linear, harmonic loads of today's modern facilities and suffer increased losses as a result. Distribution transformers are installed in the mechanical rooms and in various electrical closets to step down the utility's primary voltage. Replacing the existing transformers (480V and below) with new transformers will decrease electrical distribution losses in the building. This will decrease the building's overall electrical consumption and reduce the cooling load if in a conditioned area. The table is a listing of the size of the existing transformers that are proposed to be replaced with more efficient units.

The primary goal of this ECM is increased energy savings through the replacement of older, inefficient transformers (480V and below) with newer and ultra-high efficient transformers. Replacing these units prior to a sudden end of life results in a lower risk of Institution downtime.

SCI-Mercer Transformers To Be Replaced		
kVA	Existing Quantity	Replacement Quantity
10	3	3
15	2	2
30	9	9
45	7	7
75	13	13
112.5	1	1
150	2	2
175	1	1
225	3	3

ESG #4 GENSET Energy Enhancement

Stand-by diesel generators must be kept hot at all times so that they can be rapidly started during a power outage. This heating is typically accomplished using electric resistance heaters, which is a process that uses electricity and costs money. There are two sets of generators present at the facility.

The facility was previously designed with emergency generators in each building. This was changed to a large pair of emergency generators located outside the fence that is capable of operating in parallel and providing power for the entire site. When this work was completed, the existing building generators were essentially removed from service and per the staff, they had no fuel essentially making them inoperable. During site visits, all of the observed individual building generators were warm from the block heaters being energized. Operating heaters on inoperable heaters are causing unnecessary electric usage. ESG proposes disabling (i.e. turning off) the block heaters to the individual building generators that are not being used (i.e. disabled) and tagging the disconnects to ensure no one inadvertently reenergizes the block heaters. For the purposes of the RFP it was assumed that there are 8 generators each with a 5kW heater located inside the fence that have block heaters energized that can be disabled. Additional investigation and verification of the counts and sizes will occur during the IGA.

©2023 Energy Systems Group, LLC

ESG #5 Kitchen Hood Controls

There are three (3) older Make Up Air Units (MAUs) that have no treatment of incoming air (no heating or cooling) and serve the main three (3) kitchen hoods. The existing MAUs consist of Variable Frequency Drives (VFDs) that are being controlled manually. There are three other newer MAUs, a Reznor and two Bousquet units. These units can heat the incoming air but have no cooling. One is currently not operating. The kitchen hoods have no automatic controls to limit or reduce the speed of the fans during periods of low demand or smoke. During idle, non-cooking periods, full speed/flow operation of the units results in a considerable amount of wasted energy. Not only is exhaust and make-up air fan energy wasted, but, more importantly, conditioned air is unnecessarily exhausted. A Kitchen Hood Control system is a variable-speed control strategy that reduces fan speed or shuts the system down during idle non-cooking periods by use of temperature and optic sensors that detect the heat and smoke load inside the hood and vary the speed of the exhaust and make-up fans.

ESG recommends that kitchen hood controllers be installed in the kitchen hoods to properly control the airflows of three (3) make-up air units and three (3) exhaust systems. These controllers would vary the speed of the kitchen hood fans based on the operation of the equipment. The use of kitchen hood controls will reduce the overall amount of air required from the kitchen, which will also reduce the quantity of air-conditioned. This will also require the addition of the necessary controls to maintain acceptable temperatures and space pressures.

ESG #6 Central Utility Plant

New Central Boiler & Chiller Plant

ESG evaluated the concept of a central hot water boiler plant that would service the primary equipment (air handlers) as well as domestic hot water (DHW) tanks located throughout the entire complex. The central plant will consist of (4) gas-fired 3,000 MBH condensing boilers. A new central plant will also include new chilled water equipment that would service existing air handlers located throughout the complex. The plant will consist of centrifugal chillers with a variable frequency drive.

ESG is recommending this approach as it accomplishes the heating fuel switch to natural gas outlined in Core ECM #4 and ECM #5., as well as the chiller upgrade outlined in Core ECM #9. The proposed centralized plant approach is considered favorable at this facility compared with replacing existing decentralized equipment due to reduced maintenance, longer equipment life expectancy, and improved controllability for heating and cooling comfort. ESG will also provide a provision for a future connection to buildings that currently consist of the buildings with the new heat pump HVAC units. The scope of this central plant includes but is not limited to the following:

- Underground mains and elbows
- All necessary isolation, balancing, and control valves
- Underground manholes
- Hot water piping inside buildings
- Domestic hot water (DHW) heat exchangers
- Controls for Heat exchangers
- Domestic Hot water piping
- Demolition of existing air handling units (AHUs) and associated electric coil
- New air handlers and refurbishment of existing
- Remove elect coils on AHUs
- New hot water coils on AHUs
- DDC controls for AHUs
- Combustion air intakes
- Expansion tanks
- Gas piping
- Underground Chilled Water Branches
- Chilled Water Pipes in Buildings
- Demo Existing Chiller/Condenser Unit
- Demolition of existing Direct Expansion (DX) coil and associated condenser
- New chilled water coils in air handlers
- DDC controls
- Chillers (2- 400 ton)
- Cooling Tower with VFDs
- Primary and secondary distribution
- Tower Supports

©2023 Energy Systems Group, LLC

- 2-way valves on the coil
- Insulation
- Hot water piping distribution with primary/secondary flow
- Construct a Central Utility Plant building
- Boilers (4@3,000 MBH Out)
- Pumps with VFDs
- Flue stacks
- Testing and Balancing of Water & Air
- Water softener
- Water treatment
- Controls
- Upgrade Electrical Service
- Water and sewer service
- Design Services
- Startup and Commissioning

ESG #7 Install Propane Blending Station

ESG proposes the following in conjunction with the new natural gas service to the site as a backup fuel source. This will also allow SCI Mercer to utilize interruptible natural gas rate tariffs from the utility.

The proposed system shall include one (1) new 12,000-gallon above-ground propane storage tank, truck transport unloading station, venturi air-gas blending system, and liquid propane pump set. The blending system and pump set shall be set on reinforced concrete pads. The truck transfer unit (TTU) will be in concrete to provide proper anchorage for the TTU stanchion in a break-away event. The propane tank piers shall be reinforced precast concrete, and be designed for the storage tank. The entire installation shall be within a new chain link fence with appropriate gates (Bollards or concrete barriers) where required per code. Electric will be obtained from either the substation or the generator building.

ESG is proposing the installation of a smaller storage tank with a truck unloading station that will allow SCI Mercer to bring in a larger propane truck to provide longer-term (8 hours and above) service if needed. This will result in lower capital expenditure of the plant and lower costs of the stored propane.

The propane blending station scope will include:

- Provide and install one (1) new 12,000-gallon above-ground propane storage tank. Per the Institution, this tank will be capable of providing up to eight (8) hours of propane to allow the Institution to obtain a bulk tank delivery to satisfy the backup loads after that eight (8) hour period.
- Provide and install one (1) truck transport unloading (TTU) station. The piping shall be connected to a custom fabricated steel stanchion embedded in concrete, to provide piping anchorage and a “breakaway” piping feature by NFPA 58 requirements.
- Provide and install one (1) manually operated Emergency Shut-off Valve (ESV).
- Provide and install one (1) venturi air-gas blending system. The vaporizer portion shall be a direct-fired water bath LP gas vaporizer package, completely fabricated, piped, and painted.
- Provide and install one (1) simplex packaged liquid pressurization system located adjacent to the propane tank, to pump liquid propane to the vaporizer at a suitable pressure for proper operation of the propane/air blender.
- The propane system shall incorporate an emergency shutdown system (ESS) to provide closing of the emergency shut-off valve at the TTU, and shutdown of all internal tank valves from a remote station, by NFPA 58 requirements.
- Start-up and commissioning.
- All work shall be by the requirements of NFPA 58, LP Gas Code, 2015 Edition, and the Pennsylvania Department of Labor & Industry.

During the Investment Grade Audit, ESG will work with DOC and SCI Mercer to determine the exact location of the propane station and the savings associated with the interruptible rate tariff. The final design during the IGA will determine additional details associated with the blending station.

©2023 Energy Systems Group, LLC

ESG #8 Building Level Natural Gas Submetering

As part of the natural gas conversion, ESG considered the installation of new pulse-meter natural gas submetering equipment at each of the buildings. If DOC desires to select the natural gas conversion, ESG will further investigate the installation of submetering during the IGA. Some points to consider include:

- Limited cost-benefit ratio and financial payback
- Natural Gas submeters would require potential ongoing regular calibration and maintenance
- Based on HVAC system types there is limited opportunity for simultaneous heating and cooling to occur which would be detected by submeters
- The majority of the buildings are operated 24/7 with limited opportunity for temperature setbacks

ESG #9 Replace (4) Bard Units on Building 28

Building 28 is heated and cooled by four (4) 3-ton Bard wall-hung package air source heat pumps (ASHPs) with 10kW electric resistance auxiliary heat that are at the end of life and are not equipped with energy recovery. These units use the older R-22 refrigerant which is no longer manufactured. ESG recommends replacing the units with modern more efficient units with energy recovery to reduce electric energy consumption while providing heating, cooling, and ventilation to the spaces. Based on cost and savings analysis, the replacement of these units will be further investigated during the IGA.

ECMs identified or part of *Appendix "R"*, that can be evaluated further during the IGA

For more detailed descriptions, please see Appendix 1 – "ECMs Considered but not Recommended".

- ESG #10 - Building Envelope Upgrades
- ESG #11 - Retro-Commissioning
- ESG #12 - Walk-in Freezer Controllers
- ESG #13 - Replace/Refurbish Existing AHUs and RTUs
- ESG #14 - Piping Insulation
- ESG #15 - WWTP Process Improvements
- ESG #16 - Upgrade Security Systems
- ESG #17 - Correct Ventilation Issues – Humidity in Many Bathrooms
- ESG #18 - Upgrade Fire Alarm Systems
- ESG #19 - Add Emergency Generator
- ESG #20 - Computerized Maintenance Software
- ESG #21 - CHP
- ESG #22 - Replace Refrigeration Units – in warehouse
- ESG #23 - Solar DHW Heating
- ESG #24 - Heat Pump DHW Heating
- ESG #25 - Replace Chiller & Expand CHW loop – Block A, M, and Bldg 4

d. Provide a self-funded project without using energy-related cost savings (ERCS) nor Operations & Maintenance (O&M) savings. Provide an alternate option that does include ERCS and/or O&M savings.

Please refer to the tables included in this ECM Submission for an ECM listing and associated cash flow for both the Self-funded Project as well as the Secondary Option proposed by ESG.

©2023 Energy Systems Group, LLC

e. The degree to which the Quote demonstrates the technical feasibility, suitability, reasonableness, comprehensiveness, and acceptability of the proposed ECMs, including the proposed equipment and quality of said equipment for the proposed savings.

All of the ECMs developed for this project were either taken from the core ECM listing in Appendix R or developed through knowledge gained by ESG's site visits. All the ESG developed ECMs for this project have been implemented by ESG at other facilities in Pennsylvania and throughout the country with great success. A complete detailed description of each ECM has been provided in the previous ECM descriptions listed above.

f. Training to be provided to Funding Agency staff with scope and personnel who will be providing same.

ESG has a successful track record of providing valuable technical training and supplements through its highly skilled training staff supported by experienced engineers and project personnel. ESG also utilizes Equipment and Controls Manufacturer's personnel to facilitate specific product training. While some areas of the training are standardized, most of the supplied instruction is customized and tailored to be directly associated to the energy conservation measures implemented during construction. ESG works closely with all key facility operations personnel to deliver educational training and seminars on the operation of their specific ECMs as new assets are being brought online and will continue this training during the guarantee and maintenance services phase. This customized and continual training program ensures the correct operation of equipment, optimal efficiency, and maximum extension of equipment life throughout the term of the agreement. What has worked well for ESG with previous clients is to combine on-site system specific training with equipment sponsored classroom training. We have always found the training that occurs on-site and is done on the specific equipment installed there, is always more meaningful than classroom work. The result of this training will be a staff member that continually improves and sustains operating efficiency.

ESG's comprehensive training program includes five (5) major components:

1. Customized Maintenance Staff Training and Cross-Training
2. Energy Cost Reduction Training
3. Manufacturer Training
4. On-site Training
5. AEE training center classes

Note: All of our training programs can be digitally recorded for future use by new hires and refresher courses for existing DOC staff.

Customized Maintenance Staff Training and Cross Training:

Personal interviews of maintenance staff are conducted by an ESG Training Specialist as an integral part of the maintenance staff training program to determine skill levels based on professional experience, education, and prior training. Utilizing the information gathered in these interviews, and with input provided from the facility, the ESG Training Specialist selects appropriate classroom educational modules and develops custom training tailored to the needs and skill levels of the staff to be trained. A typical program could contain three (3) classroom days of instruction and two (2) days of hands-on training on actual ECM equipment and/or systems for each staff member. The interviews are conducted before the project installation begins and provides an opportunity to educate the maintenance staff about the project, as well as obtain their support and assistance from the beginning of the project. ESG will work with facility personnel to evaluate individual capabilities and propose tailored training programs that meet the needs of the Facility. Many of these training classes are video and audio recorded allowing the staff and service personnel to maintain a library for either refresher courses or new employee orientation.

Program Objective

Improve existing operational efficiency of building energy systems and enhance facility environmental comfort by training and cross training the maintenance staff in the basics of HVAC as well as electrical theory and operation.

©2023 Energy Systems Group, LLC

Program Topics can include:

- HVAC Equipment and Maintenance
- Supply, Return, and Exhaust Air Systems
- Balancing for Energy Conservation
- Basic HVAC System Theory
- Air and Water Balance Procedures
- Electrical Equipment Maintenance

Energy Cost Reduction Training

ESG has significant in-house resources and advanced technical capabilities to provide the facility with a better understanding of energy conservation technologies and their usage. The complete understanding of overall facility operations and energy consumption that ESG incorporates into its energy cost reduction training will be of great benefit to DOC. The use of in-house ESG personnel for this component of the training, and their extensive experience in identifying and implementing energy conservation methods, will ensure the facility realizes energy and operational savings.

ESG regularly conducts a wide range of seminars to assist facility in effectively reducing energy costs. These seminars are adapted to each project and include training manuals, educational CDs, and instructional recordings that reinforce the training.

Energy Cost Reduction Training will be performed on-site to eliminate staff downtime, and will include the information itemized above, as well as information and instruction covering system architecture, operational requirements, and control strategies that can be employed to ensure energy savings.

Manufacturer Training

ESG is vendor and product-neutral, with no vested interest in any particular vendor or manufacturer. This impartiality allows us to incorporate the training from the appropriate manufacturer or service provider as the situation warrants. Most manufacturers offer excellent training, but the training is often focused solely on their product lines. ESG can incorporate an annual training allowance, paid for from guaranteed savings, which allows the facility to take advantage of the expertise of multiple manufactures that can provide both an application and theory overview for personnel. ESG will coordinate and organize vendor training on proper equipment operation for the personnel and will work with the manufacturer of each major piece of equipment to develop training manuals and a core curriculum that includes assembly/reassembly instructions, troubleshooting tips, and parts lists. This training will include operation, maintenance, and troubleshooting for all major equipment items.

On-Site Training

ESG provides on-site training for all equipment installed under the performance contracting program. Our research indicates that the most effective training takes place when performed on the actual equipment. Additionally, on-site training allows for smaller class sizes, customized curriculum, and less downtime for maintenance personnel. Training is performed throughout the term of the contract in order to update skills, provide the latest information, and train new personnel. Training programs are taped as a reference tool for personnel and new staff.

ESG will prepare tutorials and other training materials (including videos, CDs, and text) that will assist DOC in training new staff, as well as providing a library of training materials for existing personnel. Part of the on-site training involves monitoring strategies to ensure that maintenance personnel are knowledgeable of how to properly monitor the performance of all equipment installed as part of the project, as well as any related systems involved in the savings to be produced.

©2023 Energy Systems Group, LLC

g. Degree to which the methodology for the proposed ECMs was explained.

ESG developed the proposed ECMs in a collaborative effort by addressing the Appendix R ECMs as well as responding to input from the facility staff documented during site visits for Appendix R and additional ESG ECMs we proposed. ESG has provided a thorough review and summary of the proposed ECMs and has the experience and success with innovative approaches to ensure a successful project. ESG has experience with similar facilities and utilizes industry-standard as well as proven processes and ESG energy modeling and calculation tools to ensure the proposed results will be achieved.

Our approach has been and continues to be, focused on providing constant and consistent communication and documentation so DOC understands and provide input to our methodology and analysis of proposed ECMs.

h. Additional ECMs developed by ESG and included in the project.

As a result of our site visits at the facility, ESG has included ***9 ESG-developed ECMs*** in the Base project. Additional ECMs will be explored during the Investment Grade Audit.

Included in the proposed Secondary Project are additional ECMs developed by ESG. They are listed in Section "c" (above) immediately following the Base ECMs from Appendix R.

Listed below are additional ECMs that can be considered during the Investment Grade Audit should PA DOC or DGS desire to include any of them in the final project. A detailed description for each additional ECM is provided in the Appendix section of this proposal.

- ESG #1 - Install a Potable Water Plant
- ESG #2 - WWTP - Control System Upgrade
- ESG #3 - Replace Step Down Transformers
- ESG #4 - GENSET Energy Enhancement
- ESG #5 - Kitchen Hood - Control (Melink)
- ESG #6 - Central Utility Plant
- ESG #7 - Install Propane Blending Station
- ESG #8 - Building-level Natural Gas Sub-metering
- ESG #9 - Replace (4) Bard Units on Building 28

i. Provide annual financial projections for the length of the GESA Contract, to a maximum of 18 years, The Offeror should assume an interest rate of 4.5%, however, assumption of interest rates should also be based on the Offertory's research of current financial market rates. Also, assume payments will be made annually at the end of the period.

Please see the Energy Guarantee & Costs Savings Chart as well as the Performance Contract Cash Flow on the following pages included for both – ESG's Self-Funded and ESG's Secondary Project.

©2023 Energy Systems Group, LLC

ECM Chart for ESG's Preliminary Cash-Flow Neutral Project (Self-Funded)

Base Project - Self Funded Project (18 year payback)

		A	B	C	D	E	F	G Annual Utility Savings			H
ECM #	**ECM Descrition**	**Construction Cost**	**Utility Rebates**	**Annual Energy Savings**	**O&M Savings**	**Total Energy and O&M Savings**	**Simple Payback**	**Natural Gas (MCF)**	**Electric (kwh)**	**Water Sewer (Kgal)**	**Annual SPB Shortfall***
01A	**CORE ECM #1 A - Solar PV System (PPA) Base**	$ 162,805	$ -	$ 75,000	$ -	$ 75,000	2.2	-	3,750,000	-	
01B	**CORE ECM #1 B - Solar PV System (PPA) Alternate**	$ -	$ -	$ -	$ -	$ -		-	-	-	
02	**Core -ECM #2 - LED Lighting Upgrade**	$ 1,539,158	$ 48,154	$ 85,141	$ 12,884	$ 98,025	15.7	-	946,016	-	
03	**Core - ECM #3 - Extend natural gas service**	$ -	$ -	$ -	$ -	$ -		-	-	-	
04	**Core - ECM #4 - Convert electric heating to natural gas (Included in ESG #6 Central Utility Plant)**	$ -	$ -	$ -	$ -	$ -		-	-	-	
05	**Core - ECM #5 - Convert electric hot water heating to natural gas (Included in ESG #6 Central Utility Plant)**	$ -	$ -	$ -	$ -	$ -		-	-	-	
06	**Core - ECM #6 - Water Conservation**	$ 260,437	$ -	$ 153,507	$ -	$ 153,507	1.7	-	948,985	7,043	
07	**Core - ECM #7 - Controls Upgrade - Water Systems**	$ 1,732,036	$ -	$ 171,694	$ -	$ 171,694	10.1	-	256,619	15,368	
08	**Core - ECM #8 - Convert existing HVAC units to Heat Pumps (Included in ESG #6 Central Utility Plant)**	$ -	$ -	$ -	$ -	$ -		-	-	-	
09	**Core - ECM #9 - Chiller Upgrade (Included in ESG #6 Central Utility Plant)**	$ 510,649	$ -	$ 2,715	$ -	$ 2,715	188.1	-	30,168	-	
10	**Core - ECM #10 - Geothermal Investigation**	$ 21,988	$ -	$ -	$ -	$ -		-	-	-	
11	**Core - ECM #11 - Geothermal Expansion**	$ 125,718	$ 44,217	$ 930	$ -	$ 930	135.2	-	10,333	-	
12	**Core - ECM #12 - Geothermal Power**	$ -	$ -	$ -	$ -	$ -		-	-	-	
13	**Core - ECM #13 - Convert Kitchen Appliances to Natural Gas**	$ -	$ -	$ -	$ -	$ -		-	-	-	
14	**Core - ECM #14 - Controls Upgrade - HVAC Systems**	$ -	$ -	$ -	$ -	$ -		-	-	-	
16	**Core - ECM #16 - EV Charging Stations**	$ 39,265	$ 7,000	$ -	$ -	$ -		-	-	-	
17	**Core - ECM #17 - Replace Main Transformer**	$ 601,604	$ -	$ 900	$ -	$ 900	668.4	-	10,000	-	
18	ESG #1 - Install a Potable Water Plant	$ 3,159,551	$ -	$ 239,830	$ -	$ 239,830	13.2	-	-	24,803	
19	ESG #2 - WWTP - Control System Upgrade	$ 157,059	$ -	$ -	$ -	$ -		-	-	-	
20	ESG #3 - Replace Step Down Transformers	$ -	$ -	$ -	$ -	$ -		-	-	-	
21	ESG #4 - GENSET Energy Enhancement	$ 8,249	$ -	$ 5,173	$ -	$ 5,173	1.6	-	57,480	-	
22	ESG #5 - Kitchen Hood - Control (Melink)	$ 119,509	$ -	$ 10,397	$ -	$ 10,397	11.5	-	115,522	-	
23	ESG #6 - Central Utility Plant	$ -	$ -	$ -	$ -	$ -		-	-	-	
24	ESG #7 - Install Propane Blending Station	$ -	$ -	$ -	$ -	$ -		-	-	-	
25	ESG #8 - Building-level Natural Gas Sub-metering	$ -	$ -	$ -	$ -	$ -		-	-	-	
26	ESG #9 - Replace (4) Bard Units on Building 28	$ -	$ -	$ -	$ -	$ -		-	-	-	
	Client Contingency (2%)	$ 168,761	Included in Construction Cost for each ECM								
	Energy Consultant Fee (7%)	$ 590,662	Included in Construction Cost for each ECM								
	Totals	**$ 8,438,030**	**$ 99,371**	**$ 745,289**	**$ 12,884**	**$ 758,173**	**11.1**	-	**6,125,123**	**47,214**	-

Utility Rebates	**$99,371**
Energy Related Cost Savings	**$0**
Client Contingency (2%) per RFQ	**$168,761**
Financed Amount	**$8,507,420**

©2023 Energy Systems Group, LLC

Cashflow for ESG's Base, Cash-Flow Neutral Project (Self-Funded)

Energy Performance Contract Cash Flow - Base Project

Project Cost	$	8,438,030	Including Design Consultant
Rebates/ Incentives	$	*99,371*	
Client Contingency	$	64,158	2%
Design/Consultant Fee	$	506,282	7%
Net Project Cost to be Financed	$	8,507,420	
First Year Energy Savings	$	1,019,039	(Includes construction year savings)

Interest Rate	4.50%
Utility Escalation Rate	1.0%
Construction Period (Months)	12
Payment Frequency	Annual

H* - includes first 3 Years of M&V Services and allowance for ongoing O&M of New Potable Water Plant.

	A	B	C	D	E	F	G	H*	I	J	K
	Annual Energy Costs without Improvement	Annual Energy Costs with Improvement	Annual Energy Cost Savings (A-B)	O&M Savings (Provided)*	Total Savings (C + D)	Payments for Financing Equipment	Energy Related Cost Savings	Payments for Monitoring & Maintenance Services	Net Annual Benefits	Cumulative Cash Flow	Net Present Value of Cash Flow
0	$1,618,026	$1,351,728	$266,297	$0	$266,297	$0		$0	$266,297	$266,297	
1	$1,634,206	$615,167	$1,019,039	$13,013	$1,032,052	$900,552		$84,102	$47,397	$47,397	
2	$1,650,548	$890,279	$760,269	$13,143	$773,412	$654,045		$84,943	$34,423	$81,821	
3	$1,667,053	$899,182	$767,872	$13,274	$781,146	$660,586		$85,793	$34,768	$116,589	
4	$1,683,724	$908,173	$775,550	$13,407	$788,958	$671,668		$81,938	$35,351	$151,940	
5	$1,700,561	$917,255	$783,306	$13,541	$796,847	$678,385		$82,758	$35,704	$187,644	
6	$1,717,567	$926,428	$791,139	$13,677	$804,816	$685,169		$83,585	$36,062	$223,706	
7	$1,734,742	$935,692	$799,050	$13,813	$812,864	$692,021		$84,421	$36,422	$260,128	
8	$1,752,090	$945,049	$807,041	$13,952	$820,992	$698,941		$85,265	$36,786	$296,914	
9	$1,769,611	$954,499	$815,111	$14,091	$829,202	$705,930		$86,118	$37,154	$334,068	
10	$1,787,307	$964,044	$823,262	$14,232	$837,494	$712,990		$86,979	$37,526	$371,594	
11	$1,805,180	$973,685	$831,495	$14,374	$845,869	$720,119		$87,849	$37,901	$409,495	
12	$1,823,232	$983,422	$839,810	$14,518	$854,328	$727,321		$88,727	$38,280	$447,775	
13	$1,841,464	$993,256	$848,208	$14,663	$862,871	$734,594		$89,615	$38,663	$486,438	
14	$1,859,879	$1,003,188	$856,690	$14,810	$871,500	$741,940		$90,511	$39,049	$525,487	
15	$1,878,478	$1,013,220	$865,257	$14,958	$880,215	$749,359		$91,416	$39,440	$564,927	
16	$1,897,262	$1,023,353	$873,910	$15,108	$889,017	$756,853		$92,330	$39,834	$604,762	
17	$1,916,235	$1,033,586	$882,649	$15,259	$897,907	$764,421		$93,253	$40,233	$644,994	
18	$1,935,397	$1,043,922	$891,475	$15,411	$906,886	$536,097		$94,186	$276,604	$921,598	$568,318
Total	**$32,054,536**	**$17,023,400**	**$15,031,135**	**$255,244**	**$15,286,379**	**$12,790,990**	**$0**	**$1,573,791**	**$921,598**	**$921,598**	**$568,318**

©2023 Energy Systems Group, LLC

ECM Chart for ESG's Recommended/Secondary Project (Project Including O&M and Energy Related Cost Savings)

Proposed Secondary Project - With Energy-Related Cost Savings

		A	B	C	D	E	F	G	Annual Utility Savings		H
ECM #	ECM Descrition	Construction Cost	Utility Rebates	Annual Energy Savings	O&M Savings	Total Energy and O&M Savings	Simple Payback	Natural Gas (MCF)	Electric (kwh)	Water Sewer (Kgal)	Annual SPB Shortfall*
01A	**CORE ECM #1 A - Solar PV System (PPA) Base**	$ -	$ -	$ -	$ -	$ -		-	-	-	
01B	**CORE ECM #1 B - Solar PV System (PPA) Alternate**	$ 163,129	$ -	$ 200,000	$ -	$ 200,000	0.8	-	10,000,000	-	
02	**Core -ECM #2 - LED Lighting Upgrade**	$ 1,494,543	$ 48,154	$ 85,141	$ 12,884	$ 98,025	14.8	-	946,016	-	
03	**Core - ECM #3 - Extend natural gas service**	$ 1,255,197	$ -	$ -	$ -	$ -		-	-	-	$69,733
04	**Core - ECM #4 - Convert electric heating to natural gas (Included in ESG #6 Central Utility Plant)**	$ -	$ -	$ -	$ -	$ -		-	-	-	
05	**Core - ECM #5 - Convert electric hot water heating to natural gas (Included in ESG #6 Central Utility Plant)**	$ -	$ -	$ -	$ -	$ -		-	-	-	
06	**Core - ECM #6 - Water Conservation**	$ 253,210	$ -	$ 153,507	$ -	$ 153,507	1.6	-	948,985	7,043	
07	**Core - ECM #7 - Controls Upgrade - Water Systems**	$ 1,683,971	$ -	$ 171,694	$ -	$ 171,694	9.8	-	256,619	15,368	
08	**Core - ECM #8 - Convert existing HVAC units to Heat Pumps (Included in ESG #6 Central Utility Plant)**	$ -	$ -	$ -	$ -	$ -		-	-	-	
09	**Core - ECM #9 - Chiller Upgrade (Included in ESG #6 Central Utility Plant)**	$ -	$ -	$ -	$ -	$ -		-	-	-	
10	**Core - ECM #10 - Geothermal Investigation**	$ 21,378	$ -	$ -	$ -	$ -		-	-	-	
11	**Core - ECM #11 - Geothermal Expansion**	$ 122,209	$ 44,209	$ 930	$ -	$ 930	83.9	-	10,333	-	
12	**Core - ECM #12 - Geothermal Power**	$ -	$ -	$ -	$ -	$ -		-	-	-	
13	**Core - ECM #13 - Convert Kitchen Appliances to Natural Gas**	$ 1,217,576	$ -	$ 22,214	$ -	$ 22,214	54.8	(13,820)	335,727	-	$45,429
14	**Core - ECM #14 - Controls Upgrade - HVAC Systems**	$ 2,138,538	$ -	$ 14,062	$ -	$ 14,062	152.1	-	156,245	-	$104,746
16	**Core - ECM #16 - EV Charging Stations**	$ 38,175	$ 7,000	$ -	$ -	$ -		-	-	-	
17	**Core - ECM #17 - Replace Main Transformer**	$ 584,889	$ -	$ 900	$ -	$ 900	649.9	-	10,000	-	$31,594
18	ESG #1 - Install a Potable Water Plant	$ 3,071,872	$ -	$ 239,830	$ -	$ 239,830	12.8	-	-	24,803	
19	ESG #2 - WWTP - Control System Upgrade	$ 152,700	$ -	$ -	$ -	$ -		-	-	-	
20	ESG #3 - Replace Step Down Transformers	$ 614,601	$ -	$ 22,502	$ -	$ 22,502	27.3	-	250,026	-	$11,642
21	ESG #4 - GENSET Energy Enhancement	$ 7,905	$ -	$ 5,173	$ -	$ 5,173	1.5	-	57,480	-	
22	ESG #5 - Kitchen Hood - Control (Melink)	$ 115,961	$ -	$ 10,397	$ -	$ 10,397	11.2	-	115,522	-	
23	ESG #6 - Central Utility Plant	$ 13,705,789	$ -	$ 330,181	$ -	$ 330,181	41.5	(212,450)	5,035,440	-	$431,252
24	ESG #7 - Install Propane Blending Station	$ 534,451	$ -	$ -	$ -	$ -		-	-	-	$29,692
25	ESG #8 - Building-level Natural Gas Sub-metering	$ 481,006	$ -	$ -	$ -	$ -		-	-	-	$26,723
26	ESG #9 - Replace (4) Bard Units on Building 28	$ 213,952	$ -	$ 3,291	$ -	$ 3,291	65.0	-	36,566	-	$8,595
	Client Contingency (2%)	$ 557,421	Included in Construction Cost for each ECM								
	Energy Consultant Fee (7%)	$ 1,950,974	Included in Construction Cost for each ECM								
	Totals	**$ 27,871,053**	**$ 99,363**	**$ 1,259,824**	**$ 12,884**	**$ 1,272,708**	**21.9**	**(226,270)**	**18,158,959**	**47,214**	**759,406**

Utility Rebates	**$99,363**
Energy Related Cost Savings	**$759,406**
Client Contingency (2%) per RFQ	**$557,421**
Financed Amount	**$28,329,110**

©2023 Energy Systems Group, LLC

Cashflow for ESG's Secondary Project (Project Including O&M and Energy Related Cost Savings)

Energy Performance Contract Cash Flow - Secondary Project with Energy Related Cost Savings

Project Cost	$ 27,871,053	Including Design Consultant		Interest Rate	4.50%
Rebates/ Incentives	$ *99,363*			Utility Escalation Rate	1.0%
Client Contingency	$ 557,421	2%		Construction Period (Months)	12
Design/Consultant Fee	$ 1,114,842	7%		Payment Frequency	Annual
Net Project Cost to be Financed	$ 28,329,110			H* - includes first 3 Years of M&V Services and allowance for ongoing O&M of New Potable Water Plant.	
First Year Energy Savings	$ 1,547,720	(Includes construction year savings)			

	A	B	C	D	E	F	G	H*	I	J	K
	Annual Energy Costs without Improvement	Annual Energy Costs with Improvement	Annual Energy Cost Savings (A-B)	O&M Savings (Provided)*	Total Savings (C + D)	Payments for Financing Equipment	Energy Related Cost Savings	Payments for Monitoring & Maintenance Services	Net Annual Benefits	Cumulative Cash Flow	Net Present Value of Cash Flow
0	$1,618,026	$1,342,727	$275,298	$0	$275,298	$0	$0	$0	$275,298	$275,298	
1	$1,634,206	$86,486	$1,547,720	$13,013	$1,560,733	$2,513,249	$1,200,000	$115,208	$132,276	$132,276	
2	$1,650,548	$365,402	$1,285,146	$13,143	$1,298,289	$2,262,832	$1,200,000	$116,360	$119,096	$251,373	
3	$1,667,053	$369,056	$1,297,997	$13,274	$1,311,272	$2,274,061	$1,200,000	$117,524	$119,687	$371,060	
4	$1,683,724	$372,746	$1,310,977	$13,407	$1,324,385	$2,305,177	$1,200,000	$97,883	$121,325	$492,385	
5	$1,700,561	$376,474	$1,324,087	$13,541	$1,337,628	$2,316,829	$1,200,000	$98,862	$121,938	$614,324	
6	$1,717,567	$380,239	$1,337,328	$13,677	$1,351,005	$2,328,597	$1,200,000	$99,850	$122,558	$736,881	
7	$1,734,742	$384,041	$1,350,701	$13,813	$1,364,515	$2,340,483	$1,200,000	$100,849	$123,183	$860,065	
8	$1,752,090	$387,881	$1,364,208	$13,952	$1,378,160	$2,352,488	$1,200,000	$101,857	$123,815	$983,880	
9	$1,769,611	$391,760	$1,377,850	$14,091	$1,391,942	$2,364,612	$1,200,000	$102,876	$124,453	$1,108,333	
10	$1,787,307	$395,678	$1,391,629	$14,232	$1,405,861	$2,376,859	$1,200,000	$103,905	$125,098	$1,233,431	
11	$1,805,180	$399,635	$1,405,545	$14,374	$1,419,920	$2,389,227	$1,200,000	$104,944	$125,749	$1,359,180	
12	$1,823,232	$403,631	$1,419,601	$14,518	$1,434,119	$2,401,719	$1,200,000	$105,993	$126,406	$1,485,586	
13	$1,841,464	$407,667	$1,433,797	$14,663	$1,448,460	$2,414,337	$1,200,000	$107,053	$127,070	$1,612,656	
14	$1,859,879	$411,744	$1,448,135	$14,810	$1,462,945	$2,427,080	$1,200,000	$108,123	$127,741	$1,740,397	
15	$1,878,478	$415,861	$1,462,616	$14,958	$1,477,574	$2,439,951	$1,200,000	$109,205	$128,418	$1,868,816	
16	$1,897,262	$420,020	$1,477,242	$15,108	$1,492,350	$2,452,950	$1,200,000	$110,297	$129,103	$1,997,918	
17	$1,916,235	$424,220	$1,492,015	$15,259	$1,507,273	$2,466,080	$1,200,000	$111,400	$129,794	$2,127,712	
18	$1,935,397	$428,462	$1,506,935	$15,411	$1,522,346	$2,413,791	$1,200,000	$112,514	$196,041	$2,323,753	$1,549,183
Total	**$32,054,536**	**$6,821,005**	**$25,233,531**	**$255,244**	**$25,488,775**	**$42,840,321**	**$21,600,000**	**$1,924,701**	**$2,323,753**	**$2,323,753**	**$1,549,183**

©2023 Energy Systems Group, LLC

j. Proposed energy analysis demonstrates sound engineering principles and the reasonableness of the proposed savings.

In order to clearly evaluate sound engineering principles and the reasonableness of the proposed savings, ESG has provided detailed energy calculations as well as cutsheets.

ESG has a proven track record of accurately calculating the impact of all types of ECMs. Based on ESG's standard project being backed up by an annual energy savings guarantee, it is extremely important for our engineers to be accurate. ESG's track record of exceeding every one of the utility savings guarantees that are in place is strong evidence of the quality of work that we provide and the partnership that we establish with our customers.

ESG's engineering principles include:

- Evaluation of baseline conditions;
- Comparison of baseline conditions against similar facilities;
- Experience with proposed ECMs in similar facilities; and,
- Workshops with DOC to review, discuss and come to an agreement on approach, analysis and recommendations.

k. Monitoring and Maintenance Services provided.

Planning for the ongoing monitoring and maintenance services starts during the IGA phase of the project. Planning for the outcome in mind – the development of each ECM, how they interact, and how to monitor and maintain the proposed savings for the life of the contract is essential. ESG has only included first three year of ongoing monitoring services per the RFQ for measurement and verification. The ongoing maintenance services will be discussed during an Investment Grade Audit. ESG has not included any cost of ongoing maintenance services at the time. At the end of each visit, DOC staff will be provided with a completed copy of the Service Engineer's Report indicating maintenance that was performed. Additionally, preferential emergency service will be provided as needed between inspections.

Preventive Maintenance (PM): Of existing and new equipment is a vital part of the performance period. ESG working in conjunction with equipment manufacturers will completely train DOC State DOC Maintenance Staff in the proper preventative maintenance procedures for all project installed equipment.

Emergency Service: ESG's approach to emergency service would mirror that for PM. The scope would include an ESG staff and/or service from a qualified subcontractor to provide emergency service, as needed.

Warranty: In the O&M Manuals, ESG will provide details on warranty of labor and material for various ECMs. The warranty information will be in accordance with the program requirements. For example, the manufacturer warranty is typically 5-10 years for LEDs and associated drivers. Traditionally, equipment warranties are limited to one of two years, however in some cases EGS can press for extended warranty terms, if desired by DOC.

PM and emergency response services will come under the purview of our Corporate Operations Service group. The ESG Northeast Regional operations team will be responsible for coordinating the maintenance work.

©2023 Energy Systems Group, LLC

l. Description of Measurement & Verification Plan

Measurement and verification is the lifeblood of any GESA Project. ESG's M&V personnel will be involved with the project from conception to commissioning and throughout every year of the contract term, to help establish the most appropriate and cost-effective M&V protocol and the corresponding baseline determination requirements. During post-installation, M&V is critical in assuring those post-installation measurements are performed according to the chosen M&V protocol, and proper documentation and analysis of these measurements are performed. Our M&V Engineer, Gabriel Bolivar will serve as DOC's contact point for M&V information. Gabe will be supported by a team of CMVP professionals, Brian Clippinger, David Walke and Brian Borillo. All of these are dedicated M&V professionals whose primary goal is to provide savings verification and will use the corporate resources of ESG to provide annual documentation that the installed systems are performing to the guaranteed level. M&V team members are listed on the organizational chart and have many years of M&V experience with applicable IPMVP protocols.

Overview of IPMVP Options A, B, C and D *(Based on IPMVP, Volume I, and Chapter 4.7)*

IPMVP Option	How Savings are Calculated	Typical Applications
Option A - Retrofit Isolation: Key Parameter Measurement Savings determined by field measurement of key performance parameter(s) which define the energy use of the ECMs.	• Short-term or continuous measurements of the key operating parameter(s). • Estimated values.	A lighting retrofit where power draw is the key performance parameter.
Option B - Retrofit Isolation: All Parameter Measurement Savings are determined by field measurement of the energy use of the ECM-affected system.	Short-term or continuous measurements of baseline and reporting-period energy and/or engineering computations.	Addition of a VFD and controls to a motor to adjust pump flow.
Option C - Whole Facility Savings are determined by measuring energy use at the whole facility or sub facility level.	Analysis of whole facility baseline and reporting-period (utility) meter data. Weather related or other adjustments as necessary.	Multifaceted energy management program is affecting many systems in a facility.
Option D - Calibrated Simulation Savings determined through simulation of the energy use of the whole facility or of a sub facility.	Energy use simulation, calibrated with hourly or monthly utility billing data. (Energy end-use metering may be used to help refine input data.)	Multifaceted ECMs in a facility with no metering in the baseline period, or when master-metered.

ESG's savings results for our customers have an average **positive** deviation of more than 10%, strong evidence of our ability to accurately calculate savings.

Compliance with Customer Requirements: ESG will work with DOC to define a customized approach for M&V that best reflects their goals. ESG is comfortable working in partnership to customize an M&V process that is accurate, fair to both parties and also, helpful in maximizing savings results for the term of this performance contract. ESG guarantees all energy savings using the most appropriate methodology for accuracy and cost effectiveness. It is common for ESG guaranteed contracts to use multiple methodologies and data collection techniques to arrive at the best process for each facility.

©2023 Energy Systems Group, LLC

Adjustment for Shortfalls and Windfalls: All savings above the Project Guarantee Amount are entirely retained by DOC. Each year's annual savings must meet/exceed the debt service payments for that year. Any shortfall will be reconciled and paid annually by ESG in an amount equal to the shortfall as calculated by the annual energy audit and accepted by customer representatives.

Regular Interval Post-Installation Verification: At regular intervals, ESG will verify that the installed equipment or systems have been properly maintained and are operating correctly. Although annual reports are required for establishing savings guarantees, reports can be prepared more frequently, to ensure systems are working properly, allowing for adjustments throughout the year.

Energy Conservation Measure "ECM" Description	M&V Option			Measured Variable/Calculated Value
	Elec.	Fuel	Water / Sewer	
Core ECM #1A - Solar PV System (PPA) Base	A	N/A	N/A	Confirmation of electric utility rate before and after the PPA
Core ECM #1B - Solar PV System (PPA) Alternate	A	N/A	N/A	Confirmation of electric utility rate before and after the PPA
Core -ECM #2 - LED Lighting Upgrade	C	C	N/A	Analysis of whole facility baseline and reporting-period (utility) meter data. Weather related or other adjustments as necessary.
Core - ECM #3 - Extend natural gas service	C	C	N/A	Analysis of whole facility baseline and reporting-period (utility) meter data. Weather related or other adjustments as necessary.
Core - ECM #4 - Convert electric heating to natural gas (Included in ESG #6 Central Utility Plant)	C	C	N/A	Analysis of whole facility baseline and reporting-period (utility) meter data. Weather related or other adjustments as necessary.
Core - ECM #5 - Convert electric hot water heating to natural gas (Included in ESG #6 Central Utility Plant)	C	C	N/A	Analysis of whole facility baseline and reporting-period (utility) meter data. Weather related or other adjustments as necessary.
Core - ECM #6 - Water Conservation	C	C	A	C: Analysis of whole facility baseline and reporting-period (utility) meter data. Weather related or other adjustments as necessary. A: Pre and post sample measurements of the water consuming equipment flow rates.
Core - ECM #7 - Controls Upgrade - Water Systems	C	C	A	C: Analysis of whole facility baseline and reporting-period (utility) meter data. Weather related or other adjustments as necessary. A: Pre and post sample measurements of the water consuming equipment flow rates.

©2023 Energy Systems Group, LLC

Energy Conservation Measure "ECM" Description	M&V Option			Measured Variable/Calculated Value
	Elec.	Fuel	Water / Sewer	
Core - ECM #8 - Convert existing HVAC units to Heat Pumps (Included in ESG #6 Central Utility Plant)	C	C	N/A	Analysis of whole facility baseline and reporting-period (utility) meter data. Weather related or other adjustments as necessary.
Core - ECM #9 - Chiller Upgrade (Included in ESG #6 Central Utility Plant)	C	N/A	N/A	Analysis of whole facility baseline and reporting-period (utility) meter data. Weather related or other adjustments as necessary.
Core - ECM #10 - Geothermal Investigation	C	C	N/A	Analysis of whole facility baseline and reporting-period (utility) meter data. Weather related or other adjustments as necessary.
Core - ECM #11 - Geothermal Expansion	C	C	N/A	Analysis of whole facility baseline and reporting-period (utility) meter data. Weather related or other adjustments as necessary.
Core - ECM #12 - Geothermal Power	C	C	N/A	Analysis of whole facility baseline and reporting-period (utility) meter data. Weather related or other adjustments as necessary.
Core - ECM #13 - Convert Kitchen Appliances to Natural Gas	C	C	N/A	Analysis of whole facility baseline and reporting-period (utility) meter data. Weather related or other adjustments as necessary.
Core - ECM #14 - Controls Upgrade - HVAC Systems	C	C	N/A	Analysis of whole facility baseline and reporting-period (utility) meter data. Weather related or other adjustments as necessary.
Core - ECM #16 - EV Charging Stations	C	N/A	N/A	Ongoing measurements of the vehicle charging electrical usage.
Core - ECM #17 - Replace Main Transformer	C	N/A	N/A	Analysis of whole facility baseline and reporting-period (utility) meter data. Weather related or other adjustments as necessary.
ESG #1 - Install a Potable Water Plant	A	N/A	A	Short-term or continuous measurements of the key operating parameter(s) to be determined during the IGA.
ESG #2 - WWTP - Control System Upgrade	N/A	N/A	N/A	No measurable savings projected for this ECM.
ESG #3 - Replace Step Down Transformers	C	N/A	N/A	Analysis of whole facility baseline and reporting-period (utility) meter data. Weather related or other adjustments as necessary.

©2023 Energy Systems Group, LLC

Energy Conservation Measure "ECM" Description	M&V Option			Measured Variable/Calculated Value
	Elec.	Fuel	Water / Sewer	
ESG #4 - GENSET Energy Enhancement	A	N/A	N/A	Pre and post measurements of the electrical power consumed.
ESG #5 - Kitchen Hood - Control (Melink)	C	C	N/A	Analysis of whole facility baseline and reporting-period (utility) meter data. Weather related or other adjustments as necessary.
ESG #6 - Central Utility Plant	C	C	N/A	Analysis of whole facility baseline and reporting-period (utility) meter data. Weather related or other adjustments as necessary.
ESG #7 - Install Propane Blending Station	N/A	C	N/A	Analysis of whole facility baseline and reporting-period (utility) meter data. Weather related or other adjustments as necessary.
ESG #8 - Building-level Natural Gas Sub-metering	C	C	N/A	Analysis of whole facility baseline and reporting-period (utility) meter data. Weather related or other adjustments as necessary.
ESG #9 - Replace (4) Bard Units on Building 28	C	C	N/A	Analysis of whole facility baseline and reporting-period (utility) meter data. Weather related or other adjustments as necessary.

©2023 Energy Systems Group, LLC

APPENDIX

Appendix 1:
ECMs Considered but not Recommended

(included w/ Electronic Copy only)

The following ECMs were evaluated by ESG but not included in the Base or Secondary project but can be further evaluated during the IGA.

ESG #10 Building Envelope Upgrades

During our inspection of SCI Mercer, the ESG Engineer observed areas in certain buildings that can be air-sealed and insulated to increase the energy efficiency, comfort, and durability of those buildings. Most building envelope solutions revolve around reducing unwanted air exchange. Gaps, cracks, and holes are sealed to minimize leakage of outside air which must be heated and/or cooled using expensive electric and thermal energy and improve comfort for building occupants.

ESG proposes further investigating the potential for cost-effective improvement to the building envelope during the IGA.

ESG #11 Continuous Commissioning/Retro-Commissioning

ESG will utilize 3rd party commissioning to perform this task. Most control devices (damper and valve actuators, temperature/humidity and pressure sensors, and fan/pump status sensors) were observed to be in fair to poor working operation. Many of the zone damper actuators are disconnected and linkages are broken. The accuracy of the sensors and gauges is unknown.

The repair or replacement of these devices found to be failed or defective will be corrected during the commissioning process within the project's buildings/systems that affect the optimization strategies. Many of these at the equipment level will be addressed through the replacement of the proposed equipment and the upgrade of existing controls with a new centralized energy management control system.

Continuous Commissioning: ESG will conduct semi-annual M&V visits and one annual re-commission (RCx) visit throughout the performance period.

During the implementation phase, trends will be set up on essential monitoring and control points identified by the ESG Team. Enhanced energy management features, such as automatic fault detection and diagnosis, will be flagged for the O&M visits for the identification of issues and to minimize O&M costs. These advanced analytics will help reduce minor problems from becoming catastrophic and help produce the estimated savings.

Other performance period activities, such as the annual RCx visit, include inspecting the trending data, verifying control sequences and engaging the optimized strategies, and identifying deficiencies and non-working equipment/devices for corrective action by the Government.

Retro-commissioning (RCx) is the process of re-apply commissioning procedures to the existing buildings to restore and improve building performance. This is a systematic process to ensure that the building energy systems perform interactively according to the original design intent and the current operational needs of the facility. This ECM will not be performed if new controls are installed as part of the scope of work, because commissioning of the new controls is standard practice.

When buildings age, optimal equipment performance is lost due to lack of or improper calibration and balancing or improperly set controls. Retro-commissioning of heating and cooling systems will ensure buildings are performing to the intended design standards. A significant portion of the process involves ensuring that each system provides appropriate levels of adequate heating and/or cooling and better

control, therefore, improving occupancy comfort. Retro-commissioning studies reveal hidden deficiencies and highlight operational & and maintenance (O&M) issues that could have been avoided as well as expose hidden control system problems. Applying retro-commissioning to existing facilities includes planning, discovering root causes of inefficiencies, developing a cost-effective project delivery, and a focus on optimizing value to the building owner. The study includes functional system testing under various modes, such as heating or cooling loads, occupied and unoccupied modes, varying outside air temperature and space temperatures.

ESG #12 Walk-in Freezer and Cooler Controls

SCI Mercer has two known areas where walk-in freezers and coolers are present based on the RFQ site walkthroughs. The main kitchen area in Building 4 appears to have new walk-in box condensing units on the roof and it is assumed the internal equipment is also new which would indicate it is likely efficient and possibly still under warranty. The second location is the warehouse outside the fence where there are refrigerated walk-in boxes.

For the Warehouse walk-in boxes, ESG proposes installing a controller designed to slow the evaporator fans when full-speed operation is not required. The controller does this by applying a lower voltage to the fan motor, thereby producing less force, and lowering the power required to run the fans. The Smart Electric Defrost capability of the controls determines when a defrost cycle is required rather than just using a timer-controlled cycle. The walk-in cooler and freezer controllers do not affect the quality of the food products stored in them. While the system maintains the temperature in the cooler or freezer, it also controls the evaporator fans. The evaporator fans are turned off approximately 40-85% of the time that the compressor is off, depending on existing cooler sizing and configuration. This reduction in fan energy use also results in less heat introduced into the cooler from the fan motors. The system is also programmed to control the defrost operation and to notify the user of any potential problems that may arise during normal operation thus reducing both maintenance and product loss.

ESG #13 Refurbish and/or Replace Existing AHUs/RTUs

Many of the HVAC units are well beyond useful life and in need of refurbishment or replacement. Also, a significant amount of the HVAC equipment on-site is Air Handling Units (AHUs) that have remote direct exchange condensers for cooling located on the roof with electric resistance for heating. The units are typically multizone with pneumatic dampers at the unit for each zone. All the observed units had the outdoor air damper actuators removed or were clearly failed. The zone dampers were observed disconnected, zip tied, or screw into position indicating any pneumatic actuators were not operable and the casings are rusted and falling apart.

The Make-up Air Units (MAUs) or Dedicated Outdoor Air System (DOAS) that provide ventilation air to the administration area served by the water source heat pumps was disabled and is not operated during the winter due to freezing issues within the unit.

Refurbishment of these units aims to restore the internal mechanics of the units to work as new. This includes the replacement of air filters, dampers, fans, and fuses, in addition to cleaning or replacement of the coils. This process offers a great opportunity to incorporate the units into the BMS if they are not already. Doing so will increase controllability and occupant comfort, as well as reduce energy consumption due to proper scheduling and controls. This will significantly reduce the need for any pneumatics throughout the building. Additionally, new high-efficiency fans will decrease the electrical

energy usage. The overhaul of units will require, cleaning of the coil, new digital controls, valves, thermostats, and dampers.

ECM #14 Pipe Insulation

Energy in a building's steam or hot water distribution system is wasted through radiant thermal energy loss from a wide range of sources, including piping, piping valves, and fitting assemblies. Insulation on the piping and valves helps reduce heat loss (gain) and facilitates controlled delivery of heating fluid to the point of use. Un-insulated piping results in undesirable and avoidable thermal energy loss, resulting in an uncontrolled heating process. Simply re-insulating the piping and valves helps reduce the loss, and leads to improved heating system performance and comfort.

There are no heating boilers, hot water, or steam, used at the facility for space heating, and therefore, with the exception of domestic hot water which normally would not exceed 140°F, there are no substantial piping/valve systems that would provide positive economic payback for adding insulation. However, during the IGA some specific piping may be addressed for safety to minimize the possibility of burns, or for equipment preservation from chilled water piping where condensation is occurring due to improper insulation which was observed on some of the existing chilled water systems.

ESG #15 WWTP Process Improvements

Below are measures that ESG will further investigate during the investment-grade audit, which may benefit the existing on-site wastewater treatment plant (WWTP). ESG has extensive WWTP experience and will explore these options with SCI Mercer and determine if a cost-effective mixture of ECMs can be developed for the Institution. The average expected life for a wastewater facility and its mechanical systems is twenty years. As equipment moves beyond its useful life, there is the potential for failure that can jeopardize the facility's ability to meet permitted discharge requirements. Potential measures considered for implementation include:

- Implement on-demand (VFD) strategies at wastewater treatment (WWT) facilities to better match pumping speeds to actual demand
- Improve WWT processing SCADA capabilities, to enhance process control and efficiency
- Employ Strategies for improved aeration in WWT oxidation pools, such as high-efficiency impellers/blowers, or fine bubble diffuser systems
- Improve sludge dewatering techniques for WWT to reduce weight-based tipping of final waste product.
- Conversion of aerobic digestion systems (if used) to anaerobic systems for enhanced solids dewatering capability: The difference between anaerobic and aerobically digested sludge is typically 2-3%. Converting to anaerobic digestion would not be cost-effective at a treatment plant this size. The measure would not be economical.
- Employ pump staging strategies during increased use periods to reduce demand (kW) costs at potable water pumping and sewage transfer stations
- Identify and eliminate all infiltration and ingress (I&I) of water to the sanitary sewer system.

ESG #16 Security System Upgrade

ESG can further investigate, during the IGA, security system upgrades that may be warranted at the facility including, door controls, cameras, monitoring, and detection systems. ESG is not including work in these areas at this time due to minimal energy payback but expect to further investigate this during the IGA.

ESG #17 Correct Ventilation Issues – Humidity in Bathrooms

The staff indicated issues with humidity levels in many of the inmate shower areas. Of the exhaust systems that ESG observed, most were noted to be not operating. For example, while on the roof of M-Block, none of the exhaust fans were operating. ESG will further investigate this ECM during the IGA.

ESG #18 Fire Alarm System Upgrade

The existing fire alarm system is a Simplex system. With the exception of H, N, and G blocks the systems are not addressable and are only by zone. Some or all of the buildings outside the fence are not on the fire alarm system due to fiber issues. ESG can further investigate, during the IGA, fire alarm system upgrades that may be warranted at the facility including upgrading housing units to have addressable systems. ESG is not including work in these areas at this time due to there being no to minimal energy payback but ESG expects to further investigate this during the IGA.

ESG #19 Add Emergency Generator

SCI Mercer has two large diesel generators located in a structure outside the fence that is sufficient to power the entire facility when both are operated in parallel during peak demand times seen in the winter. Due to the nature of both generators being required to meet demand, there is no redundancy to the system in the winter.

If natural gas becomes the dominant heating fuel at the site through other recommended ECMs, the reduced winter electric load would likely be sufficient to where only one generator is needed to power the facility, thereby creating redundancy.

If a new generator is installed it should be investigated to determine the economics and availability of using the generator as part of a utility demand response program to help offset the cost of the generator installation. In order to operate the new generator during non-emergency times (outages) the new generator would need to meet non-emergency Generator Standards (EPA Tier 4 rated generator), which would increase the initial cost. These additional generator options can be future evaluated if desired during the IGA.

ESG #20 Computerized Maintenance Software

ESG has included a new maintenance software package that will be installed on the same desktop computer being used for the energy management system. This computer will be located in the Building M Facility Manager's office. This computerized maintenance software includes the following features and enhancements:

> **Enhanced performance.** Proteus MMX has been redesigned to capitalize on the latest CS 2 database technology and enhancements, including MS SQL Server and Oracle. It offers many new features, including an ERP interface and support of web hosting using Application Server Software and eCommerce, as clients expand into these areas.
>
> **Database Optimization.** Eagle's proprietary data optimization technology, CS 2, brings enhanced performance to everyday tasks. Users of comparable systems will experience minimum speed improvements of 3-5 times for database activities[1], such as adding equipment or inventory items. This translates to man-hour reductions of 50% and more.

Increased Productivity. Proteus MMX's functionality has been improved for even greater speed and a more versatile user interface. With new features such as PM Routing, Data Archive, and Data Import, you're guaranteed increased maintainability and serviceability.

PM Shadowing - Duplicate work orders are avoided through PM Shadowing. Longer frequency jobs are shadowed along with shorter frequency tasks, to avoid generating multiple work orders.

PM & DM Routing - Multiple pieces of equipment may be attached to a single work order, yet costs are recorded against each specific piece of equipment.

Multiple Stockrooms - Allows users to track inventory parts in multiple stock room locations. Eliminate out-of-stock and overstock. Keep track of parts, stock levels, and suppliers.

Data Archive - Facilitates the archiving and purging of history records (PM, DM, PO, Receiving, and Transactions). The Data Archive Viewer allows you to view archived data at will. Reducing several years of history files permits more efficient database utilization.

Data Import - Provides for the import of an unlimited number of records for insertion into Proteus databases. Data may be imported from any tab-delimited text file and inserted into the tables.

Budgeting - Permits the entry of monthly budget estimates to track actual maintenance costs against the budget.

Email/Pager - Provides for e-mail of work orders to an assigned employee or sends up to 100-character instructions to e-mail pagers.

ERP Interface (ERPI) (optional)[2] - Permits Proteus users to exchange or share

data with most ERP Systems. ERPI provides for the automated transfer of predefined data for both insertions into and export from a Proteus database. Data exchange is permitted for the tables.

The ERPI utility is designed to work with Oracle or MS SQL Server databases.

Multi-Site Client - Dial-up connection allows a client workstation to log on to any remote Proteus database on the LAN or WAN.

Asset Management - Compile accurate information on equipment and infrastructure to analyze performance, schedule preventive maintenance, and prevent breakdowns.

ESG #21 Cogeneration System

National Fuel offers natural gas in the area at an available pressure of 30 psig and to increase the gas pressure, it would be necessary to provide a natural gas compression system, which adds additional cost. Based on the above, the pursuit of this ECM was not cost-effective. Larger industrial turbines are more efficient, but the capacity required to make the larger turbine application feasible would require a system rated at greater than 2 MW of capacity as a minimum. This option may still make sense if SCI Mercer is interested in wheeling excess power. However, wheeling power may require approval and qualifications of the co-gen facility by FERC based on a set of standard criteria.

ESG did evaluate providing a 350-kW natural gas reciprocating engine in lieu of a gas turbine. These engines are more readily available in this size and costs should run about $2,200 per kW to engineer, procure, and construct. It should also be realized that the overall thermal efficiency of such an engine would be approximately 35 to 40 percent with no exhaust and jacket recovery and over 80% recovering heat from those sources.
Heat recovery can improve the operating efficiencies of the described equipment to approach 80%. The project limitation is that thermal loads are distributed, variable, and seasonal. In addition, a significant portion of the thermal load on the complex is related to space heating, and without hot water or steam heat distribution loop, a reasonable heat sink for heat recovery is not available.

700 kW capacity is the maximum we believe can be installed without becoming a generator and putting power back on the grid. It will greatly reduce the peak loads, and provide thermal energy at approximately 4,000 Btu/kWh, but its use is questionable because of the lack of a thermal load or heat sink described above.

This type of generator has an uptime of 90+ percent, a 4,000-hour interval between scheduled maintenance (oil changes and filters), and 32,000 hours between top-end valve replacement. The total life span for a major overhaul is expected to be 60,000 hours.

Installation would be outdoors, with a prepackaged enclosure on the genset package.

ESG #22 Replace Refrigeration Units in Warehouse

SCI Mercer has two known areas where walk-in freezers and coolers are present based on the limited site walkthroughs. The main kitchen area in Building 4 appears to have new walk-in box condensing units on the roof and it is assumed the internal equipment is also new which would indicate it is likely efficient and possibly still under warranty. The second location is the warehouse outside the fence where there are refrigerated walk-in boxes that may warrant replacement.

During the IGA, it will be determined if replacement of the units at the Warehouse is warranted and/or desired.

ESG #23 Solar DHW Heating

Solar water heaters or solar domestic hot water systems use the sun's thermal energy to supplement or preheat domestic hot water and are generally designed to be used with an electric or gas-fired back-up heater. This would leave the facility with a redundant hot water heating system which would reduce the load placed on the boilers and water heaters.

Based on the large usage of domestic hot water on site for kitchen use ESG is showing this ECM as a possible measure, however, the remainder of the existing domestic hot water systems are a series of individual smaller systems as opposed to a single or group of larger systems. Due to the multiple individual systems installing solar water heaters is less cost-effective, therefore, at this time this ECM is not recommended but should be considered during the IGA to determine if there is any feasibility. If implemented, this ECM would potentially be eligible for a 30-40% tax credit through the 2022 IRA legislation.

ESG #24 Heat Pump DHW Heating

Heat pump water heaters use electricity to move heat from one place to another instead of generating heat directly. Therefore, they can be two to three times more energy efficient than conventional electric resistance water heaters. Heat pump water heaters require installation in locations that remain in the 40º–90ºF (4.4º–32.2ºC) range year-round and provide at least 1,000 cubic feet (28.3 cubic meters) of air space around the water heater. The air passing over the evaporator can be exhausted to the room or outdoors.

Based on the large usage of domestic hot water on site for kitchen use, this ECM is a possible option that could reduce utility costs however the existing domestic hot water systems are a series of individual smaller systems as opposed to a single or group of larger systems. At this time this ECM is not recommended but should be considered during the IGA to determine if there is any feasibility.

ESG #25 Replace Chiller and Expand the Loop to Building 4, M & A (Included in ESG #6 Central Utility Plant)

There is a 71-ton water chiller in the basement of Building 5 with a dual compressor evaporator. The air-cooled condenser is located outside in an enclosure. The circulation pumps supply chilled water to the air handlers in buildings 1, 2, 3, 4, and 5 via a 3-inch line that runs north of the mechanical room. The primary chilled water loop consists of a 4-inch line.

1. Buildings 1, 2, 3, 4, 5, M, A:
    - Remove and demo an existing split system chiller consisting of the inside unit (evaporator and compressors), outside condenser, refrigeration lines, and the associated pumps located in building 5 basement mechanical room. Disconnect and isolate the control and power wiring.
    - Remove refrigerant lines
    - Reclaim refrigerant as per State and Local code
    - Remove and demo existing chilled water piping and associated accessories
    - Remove and demo existing AHUs for buildings 1, 2, 3, 4, 5, M, and A
    - Remove and demo the associated condenser and refrigeration line for the AHUs (buildings 1, 2, 3, 4, 5, M, and A)
    - Disconnect electrical
    - Reclaim refrigerant as per State and Local code
    - Furnish and install one new 200-ton packaged air-cooled screw chiller (to be located in the same area as the old condensing unit) – York, Trane
    - Excavation and backfill
    - Furnish and install new pumps (installed in the same location as existing ones)
    - Upgrade electrical as required for the new chiller and pumps
    - Furnish and install new chilled water piping from the new chiller to the building 5 basement with associated components and valves
    - Furnish and install new AHUs with chiller water coil and electric heat
    - Install chilled water piping to the new AHUs
    - Furnish and install new controls and control valves
    - Existing duct to remain. Furnish and install transition duct to connect existing ductwork
    - Existing electric heat in the ducts to remain
    - Provide new chilled water piping distribution to the AHUs
    - Connect new piping to the chiller and the pumps
    - Connect new piping to the chilled water AHUs
    - Startup, commissioning, and balancing

Appendix 2:
Utility Baseline Analysis

(included w/ Electronic Copy only)

ESG considers this information Confidential

UTILITY BASELINE ANALYSIS

This section contains information on the existing electric, water, and sewer usage and analysis of those utilities and rates as provided by SCI Mercer. An analysis of the local gas company's tariffs and costs is also performed. The following includes portions of this analysis relating to the utilities and is broken out into the following sections.

1. Overview
2. Base Year Summary Energy Use
3. Electric Baseline Breakout
    a. Summary
    b. Heating and Cooling Breakout - Simple Backup Method
    c. Heating and Cooling Breakout - Software Regression Analysis Method
    d. Domestic Hot Water Determination
    e. Laundry / Kitchen Usage
4. Electric & Natural Gas Rates
    a. Electric Rate
    b. Natural Gas Rate
5. Natural Gas verse Electric Rate Comparison
6. Water and Sewer Usage
    a. Water Rate
    b. Sewer Rate

©2023 Energy Systems Group, LLC

OVERVIEW

The utility information was provided in the RFQ for electric, water, and sewer. The utility information was used to establish baseline energy consumption for each of the utilities. This utility information, along with the building square footage provided, is the basis for this analysis.

The baseline is defined as the monthly and annual usage of each utility used at the facility and specifies usage with current equipment, operating schedules, and operational methodology. When choosing the baseline, ESG analyzed energy usage records for the most recent twelve to twenty-four consecutive months of utility information, taking into account any changes in facility equipment and operations that would alter the usage during the same period. This data has been used as the basis for utility analysis for this audit, along with the sample bills that ESG was able to obtain from DOC. The following pages show a sampling of the utility analysis conducted at SCI Mercer.

The preliminary utility analysis Tables 2 and 3 below show consumption and costs for electricity, and water/sewer. Utility information supplied by DOC was used in this evaluation.

Typically, during an energy audit, a facility is analyzed in terms of its specific usage per square foot for electric, gas, fuel oil, and water/sewer, as well as operating costs per square foot (sf). Energy units are used to compare efficiencies and to compare the facility against regional and national averages. Energy units are used since they are independent of utility rate changes. The units/sf and $/sf are two of the most commonly used indices to identify facilities' average energy consumption and cost per year.

The Energy Utilization Index (EUI) is the energy consumption based on the number of British thermal units per year per square foot used by a building. Essentially, the EUI expresses a building's energy use as a function of its size or other characteristics. Generally, a low EUI signifies good energy performance with high EUIs reflective of inefficient systems. All EUI numbers reported here are the site EUI values.

To make a proper analysis of the typical facility baseline energy usage and operating patterns, the utility data used in establishing the baseline is the most recent provided 12 months' data from the period of May 2022 through April 2023.

The total square footage information is based on the information provided, and missing or incomplete square footage was estimated.

©2023 Energy Systems Group, LLC

BASE YEAR SUMMARY ENERGY USE

The following electric accounts are associated with SCI Mercer. For the purposes of this analysis, only the main electric account is considered since the other accounts are small relative to the main account.

Table 1 – Electric Accounts

Electric Account	Tariff Rate
110-004-737-620	GS Small PP-GSD
110-004-737-687	GS Medium PP-GMD
110-068-341-012	GS Medium PP-GMD
110-004-876-097	Private ODL PP-PPOLD
110-004-540-537 (Main)	**GS Transmission PP-GTD**
110-004-057-082	Std Residential PP-RSD

Table 2 – Base Year Electric Summary

BUILDING DATA		ELECTRIC			TOTAL		
Facility Name	ft²	Annual kWh	Total $	$/ft²	Dollars ($)	kBtu/ft²	$/ft²
SCI Mercer	375,605	12,341,918	$783,334	$2.09	$783,334	112.15	$2.09
TOTAL	375,605	12,341,918	$783,334	$2.09	$783,334	112.15	$2.09

Note 1: Data is for a 12 month period. Energy is site use. Although not shown for simplification, all units are per year.
Note 2: Data is from May 2022 through April 2023.

Table 3 – Base Year Water Summary

FACILITY DATA		Water Usage	Water	Total
Facility Name	ft²	kgal	Dollars ($)	$/ft²
SCI Mercer	375,605	52,460	$507,253	$1.35
TOTAL	375,605	52,460	$507,253	$1.35

Note 1: Data is for a 12 month period, June 2022 through May 2023.

©2023 Energy Systems Group, LLC

SCI Mercer

Figure 1 below shows multiyear electric consumption. This is utilized to check for any abnormal patterns that differ from year to year. Overall the pattern is generally consistent and no abnormalities were observed. However, due to the facility being multiple buildings on a single electric meter, any abnormalities in a single building would likely be small relative to the overall usage.

Figure 1 – Multiyear Electric Consumption

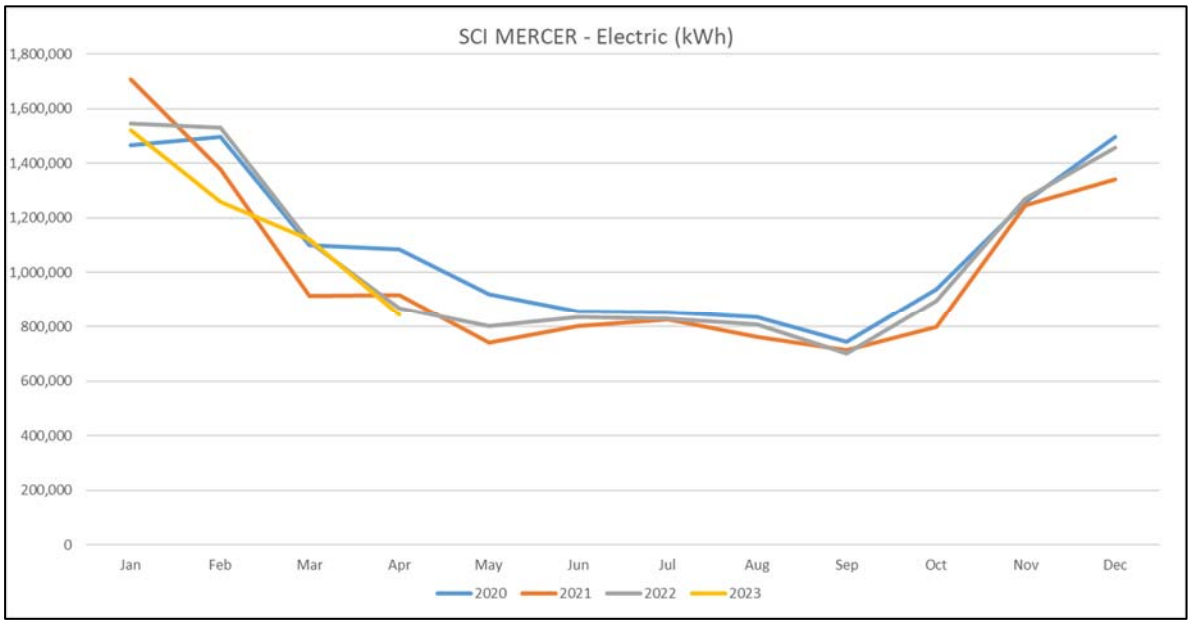

©2023 Energy Systems Group, LLC

ELECTRIC BASELINE BREAKOUT

In order to determine the values related to any fuel switch the existing electric energy used that can be switched to natural gas has to be determined. The existing uses would include space heating, domestic hot water heating, and kitchen and laundry dryer use. It is expected that not all systems will be converted to natural gas. For example, the existing geothermal water source heat pump system, recently replaced HVAC units that are heat pumps, or systems that are impractical to modify.

ESG utilized two methods to breakout the overall electric usage into baseload, heating, and cooling usage. The regression Analysis Breakout shown in Table 4 was used for the alternative fuel source calculation.

Table 4 - Regression Analysis Breakout (Summary):

Baseline Use	**7,045,670**	**kWh**
Cooling Use	**660,460**	**kWh**
Heating Use	**4,945,481**	**kWh**
Total Annual use	**12,651,611**	**kWh**

Note: The above data used the 2022 calendar year for analysis.

The following Table 5 shows the breakout of portions of the electric usage that could be potentially impacted by an alternative fuel source such as conversion from electric resistance to natural gas.

Table 5 - Total Impacted Electric Energy from Alternative Heating Source/Fuel (Summary):

Switch to Natural Gas	Existing Baseline Breakout kWh
Electric Resistance Space Heating	4,945,481
Domestic Hot water Heating	2,189,371
Kitchen / Laundry heating use	987,353
Total Impacted electric energy	**6,749,218**

©2023 Energy Systems Group, LLC

Weather Impact on Energy Usage

As indicated in the *2021 American Society of Heating, Refrigeration, and Air Conditioning Engineers (ASHRAE) Handbook Fundamentals* (Energy Estimating and Modeling Methods, System Modeling), heating and cooling requirements, and therefore energy usage, vary depending on weather conditions. To account for this, Heating Degree Days (HDD) and Cooling Degree Days (CDD) are often used as independent variables as part of the energy analysis.

HDD and CDD are quantitative indices designed to reflect the demand for energy needed to heat or cool a facility. These indices are obtained from daily temperature observations. The heating and cooling requirements for a given structure at a specific location are considered to be directly proportional to the number of Heating Degree Days and Cooling Degree Days at that location.

Although there is always a base energy load in a building that is independent of weather such as lighting, computers, and equipment, the energy usage should generally follow, and correlate well with the weather. In a linear interpolation formula, the above loads that are independent of weather are defined by the intercept, while the slope of the line defines the weather-dependent portion; these representations (Correlation to HDD) are included below. On the Monthly Electric Utility Profile graph, this would be observed by seeing the energy usage following the red Heating Degree Day (HDD) line and the blue Cooling Degree Day (CDD) line. These graphs are included in the monthly usage profile portion of this section.

In general, the higher the number of HDDs in a month, the more energy should be needed for heating the building, and, conversely, the higher the CDDs in a month, the more electricity should be required to cool the building. On the Monthly Electric Utility Profile (following pages), this would be observed by noticing the energy usage paralleling the HDD (red) line and the CDD (blue) line in their respective seasons.

If the building is operating efficiently, the heating energy should follow the red line showing that the energy used to heat the building is proportional to the weather. Similarly, if the building were utilizing electric heat, there would be an increase in electrical usage proportional to the weather becoming colder.

In general, an efficiently operated building's energy usage will tend to correlate with the weather.

©2023 Energy Systems Group, LLC

Electric usage breakout:

The heating and cooling portion of the electric was broken out in two ways, a simple visual examination of the kWh usage pattern and relations to the HDD and CDD shown in Figure 2, and a second more detailed version using regression analysis software Option-C™ by Abraxas. Please note that the regression analysis model is used for the modeling purpose.

1st METHOD - Visual Examination of Multi-year kWh Usage Graphic.

Monthly Electric Utility Usage Profile – Graphically in Figure 2 it can be seen that the electric baseline excluding the cooling and heating usage is around 600,000 to 700,00 kWh per month which would include, lighting, ventilation fans, domestic hot water, pumps, plug loads, etc. This is seen by looking at the points where there are minimal heating or cooling loads.

Space Heating: The electric usage generally is expected to follow the cooling demand or Cooling Degree Days (CDD) indicated by the blue line due to air conditioning use in the summer and in the case of SCI Mercer, which is an all-electric facility, the heating demand or Heating Degree Days (HDD) indicated by the red line in the winter months. Based on the multi-year usage graphic the lowest energy usage during what is considered shoulder months when there is minimal heating and cooling is assumed to represent the baseline usage excluding any heating or cooling energy. Graphically this is represented by the purple line at 700,000 kWh per month as shown in Figure 2. The energy above the line is the space heating and cooling energy while the energy below represents electric energy used for lighting, domestic hot water, cooking, laundry drying, plug loads, etc. The baseline 12-month energy below the purple line is then represented by 700,000 kWh x 12 months = 8,400,000 kWh per year.

Figure 2 – Monthly Electric Utility Profile (Multi-Year)

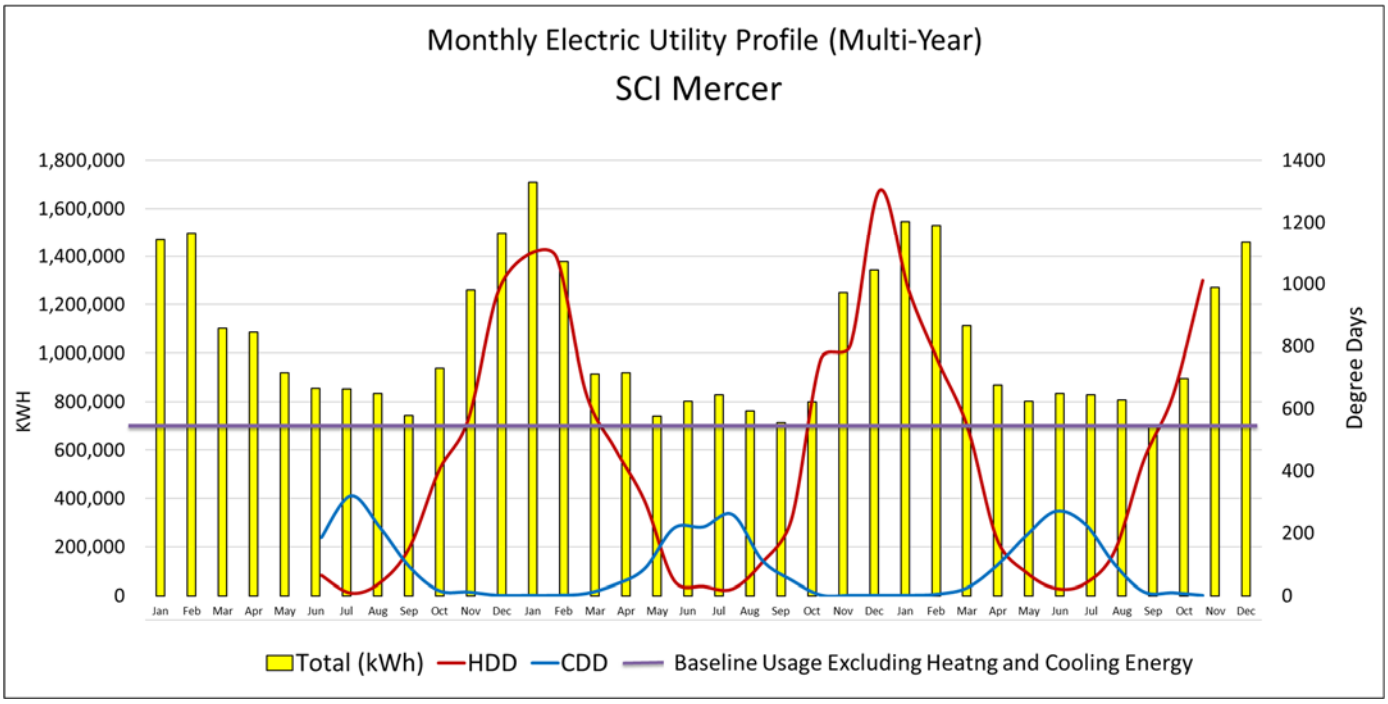

©2023 Energy Systems Group, LLC

Table 6 – Baseline 12 Month Energy Usage

Year	Month	kWh	Base Load kWh	Heat & Cooling Load	Heating Load	Season
2022	May	801,714	700,000	101,714	101,714	Heating
2022	Jun	834,340	700,000	134,340	-	Cooling
2022	Jul	828,626	700,000	128,626	-	Cooling
2022	Aug	806,505	700,000	106,505	-	Cooling
2022	Sep	699,953	700,000	(47)	-	Cooling
2022	Oct	894,817	700,000	194,817	194,817	Heating
2022	Nov	1,270,073	700,000	570,073	570,073	Heating
2022	Dec	1,458,649	700,000	758,649	758,649	Heating
2023	Jan	1,522,974	700,000	822,974	822,974	Heating
2023	Feb	1,258,865	700,000	558,865	558,865	Heating
2023	Mar	1,121,719	700,000	421,719	421,719	Heating
2023	Apr	843,683	700,000	143,683	143,683	Heating
			Total -->	**3,941,918**	**3,572,494**	

The baseline 12-month energy usage above the purple line (Figure 2) or space heating and cooling energy is the total 12-month baseline minus the 12-month energy below the purple line (Figure 2) or 12,341,918 kWh – 8,400,000 kWh = 3,941,918 kWh (space heating and cooling electric energy) as shown in Table 6. To remove the cooling load or obtain just the heating load the 12-month baseline is used and the months of June through September assume that no heating occurs as shown in Table 6. This provides a heating total kWh usage of 3,572,494 kWh as shown in Table 6.

©2023 Energy Systems Group, LLC

2nd METHOD – Regression Analysis

Regression Analysis – A regression analysis was performed on the electric energy data to provide a more detailed examination of how the weather impacts the electric energy usage and what portion is impacted by heating vs. cooling. The regression analysis software Option-C™ by Abraxas was used to complete this. The regression model representing the facility is shown as Figure 3.

Figure 3 - Tuned Regression Model Equation SCI Mercer:

kWh use = 19,303.205 x #days + 6115.372 x CDD + 777.836 x HDD

	Base Load		Cooling Load		Heating Load		Annual Use	
Total =	19,303.205	+	6,115.372	+	777.836			
	365	days	108	CDD	6,358	HDD		
	7,045,670	kWh +	**660,460**	kWh +	**4,945,481**	kWh =	12,651,611	kWh

Note: The above data used the 2022 calendar year for analysis.

Table 7 - Regression Analysis Breakout:

Baseline Use	**7,045,670**	**kWh**
Cooling Use	**660,460**	**kWh**
Heating Use	**4,945,481**	**kWh**
Total Annual use	**12,651,611**	**kWh**

©2023 Energy Systems Group, LLC

Figure 4 - Regression Analysis Model

Meter Tuning Contract

This report displays tuning period bills only

Project: SCI Mercer PA	Meter: Electric Meter 1	Site: SCI Mercer
Utility: Electricity (kWh)	Account:	Area: SCI Mercer

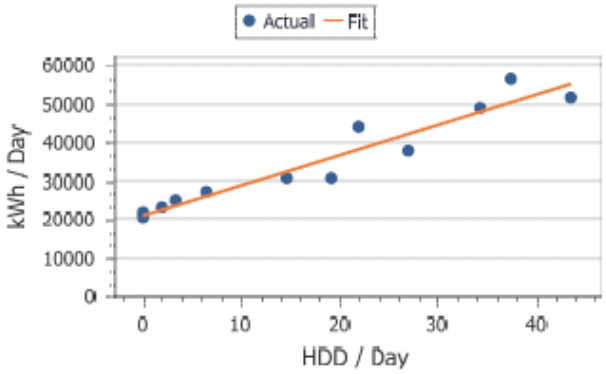

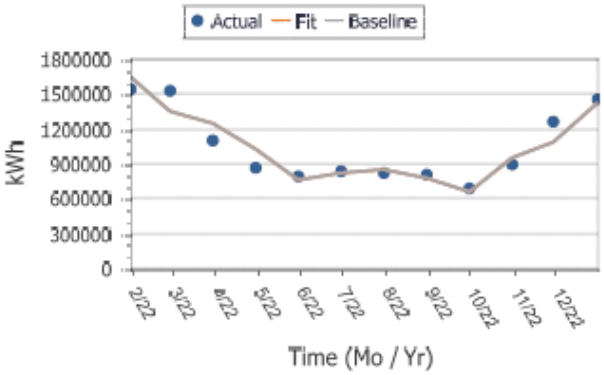

From	To	# Days	Reading	Include	HDD	CDD	Baseline	Deviation
1/01/2022	1/31/2022	31	1,545,230	☑	1,351.5	0.0	1,649,645	6.8%
2/01/2022	2/28/2022	28	1,529,896	☑	1,048.0	0.0	1,355,662	-11.4%
3/01/2022	3/31/2022	31	1,112,365	☑	838.0	0.0	1,250,226	12.4%
4/01/2022	4/30/2022	30	869,443	☑	577.5	0.5	1,031,354	18.6%
5/01/2022	5/31/2022	31	801,714	☑	199.5	2.5	768,866	-4.1%
6/01/2022	6/30/2022	30	834,340	☑	60.5	32.0	821,847	-1.5%
7/01/2022	7/31/2022	31	828,626	☑	0.0	41.5	852,187	2.8%
8/01/2022	8/31/2022	31	806,505	☑	2.0	30.0	783,416	-2.9%
9/01/2022	9/30/2022	30	699,953	☑	102.5	1.5	667,997	-4.6%
10/01/2022	10/31/2022	31	894,817	☑	455.0	0.0	952,315	6.4%
11/01/2022	11/30/2022	30	1,270,073	☑	657.5	0.0	1,090,523	-14.1%
12/01/2022	12/31/2022	31	1,458,649	☑	1,066.0	0.0	1,427,572	-2.1%
Sum / Average /Max:		**365**	**12,651,611**		**6,358.0**	**108.0**	**12,651,611**	

Electric Meter 1 (Account #):

Tuning period is 365 days from 01/01/2022 until 12/31/2022

Below is the equation used to calculate the Baseline values for the tuning period and all future periods:

Baseline (OnPk kWh) = 19303.205 x #Days + 6115.372 x CDD + 777.836 x HDD

The Baseline Equation has a Net Mean Bias of 0.000% and a Monthly Mean Error CV(RMSE) of +/-10.16%.
The underlying regression has a R2=0.890.

Explanations and Assumptions:

☐ (empty checkbox) under 'Incl?' indicates that the bill is excluded from the regression. However the Baseline Equation is always applied for all billing periods, even those excluded from the regression.

CDD = Cooling Degree-Days calculated for MEADVILLE, PA for a 72 °F balance point.
HDD = Heating Degree-Days calculated for MEADVILLE, PA for a 65 °F balance point.

Multiplier is derived from Modification(s) in effect during the tuning period and is replicated annually for all future period

©2023 Energy Systems Group, LLC

Domestic Hot Water (DHW): The existing domestic hot water (DHW) heaters use electric resistance heating. The inmate population is approximal 1100. The domestic hot water usage per inmate is likely to range between 20-35 gallons per day when the kitchen and laundry portion of the domestic hot water is included. There are currently no significant water controls at the site to limit domestic hot water usage. This provided **2,189,371 kWh** per year for domestic hot water heating.

Domestic Hot Water Load Calculation

Variable				Calculation / Source
N	Avg number of people in facility	1100	#	
ODY	Occupied Days per year	365	days/yr	= 7days/wk * 52wk/yr
AUPP	Avg. DHW use per person per day	28	gal/day	
TS	Temperature of Supply Water	50	°F	Estimated
TDHW	Temp. Domestic Hot Water	130	°F	Estimated
DHWuse	DHW gallons use per year	11,242,000	gallons/yr	= N * ODY * AUPP
HTV	Btus to heat 1 gallon of DHW	664	Btus/gallon	= 1 gal * 8.3 lb/gal * (TDHW - TS)
DHWL	DHW LOAD (@ 100% efficiency no losses)	**7,464.7**	MMBtu/yr	= DHWuse * HTV
	Conversion Factor	**293.297**	kWh per MMBtu	
DHWL	DHW LOAD (@ 100% efficiency no losses)	**2,189,371**	kWh per yr	

Kitchen: The kitchen heating and cooking is performed using electric resistance heating. The laundry and kitchen usage for drying and cooking was assumed to be 8% of the baseline or **987,353 kWh**.

©2023 Energy Systems Group, LLC

ELECTRIC & NATURAL GAS RATES

Electric transport & distribution is provided by Penn Power (a First Energy Company) at high voltage with Rate Category of General Service Transmission PP-GTD with SCI Mercer owning the primary 67,000 Volt to 12,470 Volt step-down transformer. The electric supply company is currently Direct Energy Business LLC based on the provided June 2023 electric bill. The natural gas transport and distribution company is National Fuel Distribution Company and there is currently no natural gas supplier since there is no contracted gas service.

Table 8 - Electric & Natural Gas Utilities

Electric Transport / Distribution:	Penn Power (a First Energy Company)
Electric Supplier:	Direct Energy Business LLC
Natural Gas Transport / Distribution:	National Fuel Distribution Company
Natural Gas Supplier:	Undetermined N/A

Electric Rate

A significant electric rate increase occurred starting in calendar year 2023 going from a blended rate of approximately $0.052 / kWh to $0.089 / kWh based on the information provided. The electric tariff from the transport and distribution company and the contracted supplier $/unit cost may be impacted if a substantial change in the electric usage were to occur from the installation of a large solar photo voltaic array, or switching a large portion of the facility space heating to natural gas. The existing electric supplier contract is set to expire in 2024**. Per Bulletin Number 5 relating to the RFP, an effective electric rate of $0.09/kWh is used for calculations.**

©2023 Energy Systems Group, LLC

Natural Gas Rate

The local natural gas distributor, National Fuel Distribution Company, has a natural gas line near the facility that can be used to supply natural gas to the facility. The existing tariff was examined to determine what an estimated $/unit of natural gas would cost for the purpose of comparison to the existing electric rate. Using the "Large" commercial/Public rate shown below the rate was determined.

The tariff uses a tiered rate with the natural gas becoming less expensive at the higher usage tiers. For the purpose of determining the rate, the upper tier or least expensive of the 3 tiers was used since the majority of fuel use would be under this tier in a fuel switch.

National Fuel provides a reduced rate for new customers. For the first three (3) years a reduction of $0.02 per 100 cubic feet and $0.01 per 100 cubic feet is provided for years 4 and 5.

Table 9 – Natural Gas Rates with National Fuel as the Commodity Supplier

Natural Gas Rate	Years 1 – 3	Years 4 – 5	Years > 5	
Distribution Tariff Rate	$ 2.3562	$ 2.4562	$ 2.5562	$/MCF
National Fuel Supply Charges	$ 5.8330	$ 5.8330	$ 5.8330	$/MCF
Total Rate	$ 8.1892	$ 8.2892	$ 8.3892	$/MCF

Note: Uses National Fuel as the supplier.

Table 10 – Natural Gas Rates with Assumed 3rd Party Commodity Supply Rate

The rates shown assume a 3rd party commodity supplier is used with a lower cost rate. This rate was obtained by examining utility billing for other known PA corrections facilities.

Natural Gas Rate (Assumed Supply Rate)	Years 1 - 3	Years 4 - 5	Years > 5	
Distribution Tariff Rate	$ 2.3562	$ 2.4562	$ 2.5562	$/MCF
Assumed 3rd Party Supply Charges	$ 4.6180	$ 4.6180	$ 4.6180	$/MCF
Total Rate	$ 6.9742	$ 7.0742	$ 7.1742	$/MCF

Note: Uses assumed 3rd party supplier rate based on knowledge of other existing correction facility rates.

Per Bulletin Number 5 relating to the RFP, the effective natural gas rate of $6.00/MCF is used for calculations.

<u>Conversion from $/MCF to $/MMBtu</u>

Using the effective rate of $6.00/MCF for natural gas per RFP Bulletin #5 the rate is converted to $/MMBtu assuming 1.037 MMBtu per MCF of natural gas. This is done to allow for a comparison of electric to natural gas by converting both electric and natural gas to the units (MMBtus) for apples-to-apples comparison.

Effective Natural Gas Rate (in MCF) = $6.00/MCF

Effective Natural Gas Rate (in MMBtu) = $5.786/MMBtu

©2023 Energy Systems Group, LLC

Figure 5 - **Natural Gas Tariff (National Fuel Supply Company)**

A. Amount of the Reduction

For years one, two and three of the qualification period, there shall be a reduction of $0.02 per 100 cubic feet of qualifying consumption under the Commercial and Public Authority Rate Schedule.

NATIONAL FUEL GAS
DISTRIBUTION CORPORATION

Supplement No. 261 to
Gas - Pa. P.U.C. No. 9
One-Hundred-Thirteenth Revised Page No. 42
Canceling One-Hundred-Twelfth Revised Page No. 42

Commercial and Public Authority Service Rate Schedule (Cont'd)

For "Large" Commercial/Public Authority Customers:

Basic Service Charge
$121.01 per Month

Distribution Charges

18.259¢	per 100 cubic feet for the first 300,000 cubic feet		(I)
17.123¢	per 100 cubic feet for the next 1,700,000 cubic feet		(I)
15.622¢	per 100 cubic feet for all over 2,000,000 cubic feet		(I)

Gas Adjustment Charge

9.772¢	per 100 cubic feet	Purchased Gas Cost Component (Rider A)
0.022¢	per 100 cubic feet	Merchant Function Charge (Rider G)
9.794¢	per 100 cubic feet	Total Gas Adjustment Charge

Natural Gas Supply Charge

57.150¢	per 100 cubic feet	Purchased Gas Cost Component (Rider A)	(D)
0.131¢	per 100 cubic feet	Merchant Function Charge (Rider G)	(D)
1.050¢	per 100 cubic feet	Gas Procurement Charge (Rider H)	
58.331¢	per 100 cubic feet	Total Natural Gas Supply Charge	(D)

The Natural Gas Supply Charge shall include a Merchant Function Charge (Rider G) to recover uncollectible costs associated with purchase gas costs of 0.2285% and the Gas Procurement Charge (Rider H) to recover costs of procuring natural gas pursuant to 52 Pa. Code §62.223.

The above rates shall be subject to surcharges in accordance with the provisions of Rider B - State Tax Adjustment Surcharge as set forth in this tariff.

APPLICATION PERIOD

The Application Period shall be the twelve months beginning March 1 of each year.

RULES AND REGULATIONS

The Rules and Regulations set forth in this tariff shall govern, where applicable, the supply of gas service under this rate schedule.

(D) Indicates Decrease (I) Indicates Increase

Issued: April 28, 2023 Effective: May 1, 2023

©2023 Energy Systems Group, LLC

Natural Gas vs Electric $ per Unit Energy Cost Comparison

Using the utility analysis included in this section a detailed analysis of the usage of electric resistance heating compared to natural gas and air source heat pumps (ASHPs) is contained in Appendix 3 – Fuel Switch Analysis. A basic heating source cost comparison is shown in Table 11 below.

1. To compare the cost of each fuel source electric vs. natural gas they are converted to the same dollar per unit of energy or a dollar cost per unit of a million British thermal units (MMBtu) for an apples-to-apple comparison.
2. Any efficiency difference in equipment types has to be considered. In some cases such as air source heat pumps (ASHPs) large variations in efficiency can occur based on the outdoor air temperature which must be accounted for and therefore it is the primary reason for the more detailed analysis. The below shows a basic comparison of the heating sources and relative costs for each heating source in the same units of $/MMBtu with an estimated general efficiency considered. Overall, it shows the cost per unit of energy used (or Used Cost $/MMBtu) for heating has the lowest cost using natural gas at $7.23/MMBtu when comparing the three options. A more detailed comparison of the cost differences using typically metrological year (TMY) data is contained in Appendix 3 – Fuel Switch Analysis.

Table 11 - Basic Heating Source Comparison

Heating Source	Delivered Cost $/Unit	Delivered Cost $/MMBtu	Assumed Efficiency	Used Cost $/MMBtu
Electric Resistance	$0.09/kWH	$ 26.38	100%	**$ 26.38**
Air Source Heat Pump	$0.09/kWH	$ 26.38	300%	**$ 8.79**
Natural Gas	$6.00/MCF	$ 5.79	80%	**$ 7.23**

©2023 Energy Systems Group, LLC

WATER & SEWER USAGE

Water is provided by Aqua Pennsylvania, Inc. Sewer is treated on-site through a sewage treatment plant operated by SCI Mercer. There are two water accounts associated with the facility. There is a main commercial water meter and account that serves the facility and a small residential account. House which is currently not being regularly occupied and has minimal usage. The smaller account is considered negligible and based on usage patterns was not further evaluated during this RFP and can be looked into future during the IGA.

Water Accounts

Table 12 - SCI Mercer Water Accounts

ACCT	Meter Size	Notes
001025605-0764015	6"	Main meter / Account
001054939-0764329	5/8	Residential Account

Water Baseline and Usage

The most recent provided 12 months of water usage shows a usage of 52,460 thousand gallons at a cost of $507,253 at an average daily usage of 144,917 gpd. The maximum monthly usage was in November 2022 at 4920 kgal equating to an average daily usage of 169,655 gpd.

Table 13 – Water Baseline & Usage

	Month	Starting Date	Ending Date	Duration (Days)	Total Water (kgal)	Water Charge ($)	Avg. Water ($/kgal)	Avg. Blended ($/kgal)
Summary	Jun-22	6/9/2022	7/11/2022	32	4610	$44,358.60	$9.62	$9.62
	Jul-22	7/11/2022	8/6/2022	26	3790	$36,732.57	$9.69	$9.69
	Aug-22	8/6/2022	9/8/2022	33	4160	$40,173.15	$9.66	$9.66
	Sep-22	9/8/2022	10/7/2022	29	3840	$37,196.62	$9.69	$9.69
	Oct-22	10/7/2022	11/7/2022	31	4250	$41,010.24	$9.65	$9.65
	Nov-22	11/7/2022	12/6/2022	29	4920	$49,258.74	$10.01	$10.01
	Dec-22	12/6/2022	1/9/2023	34	4880	$46,869.87	$9.60	$9.60
	Jan-23	1/9/2023	2/6/2023	28	4560	$43,796.98	$9.60	$9.60
	Feb-23	2/6/2023	3/8/2023	30	4120	$39,713.55	$9.64	$9.64
	Mar-23	3/8/2023	4/6/2023	29	4550	$43,704.18	$9.61	$9.61
	Apr-23	4/6/2023	5/8/2023	32	4640	$44,539.43	$9.60	$9.60
	May-23	5/8/2023	6/6/2023	29	4140	$39,899.16	$9.64	$9.64
	Total			362	52,460	$507,253.09		

©2023 Energy Systems Group, LLC

Figure 6 – Water Baseline & Usage Pattern

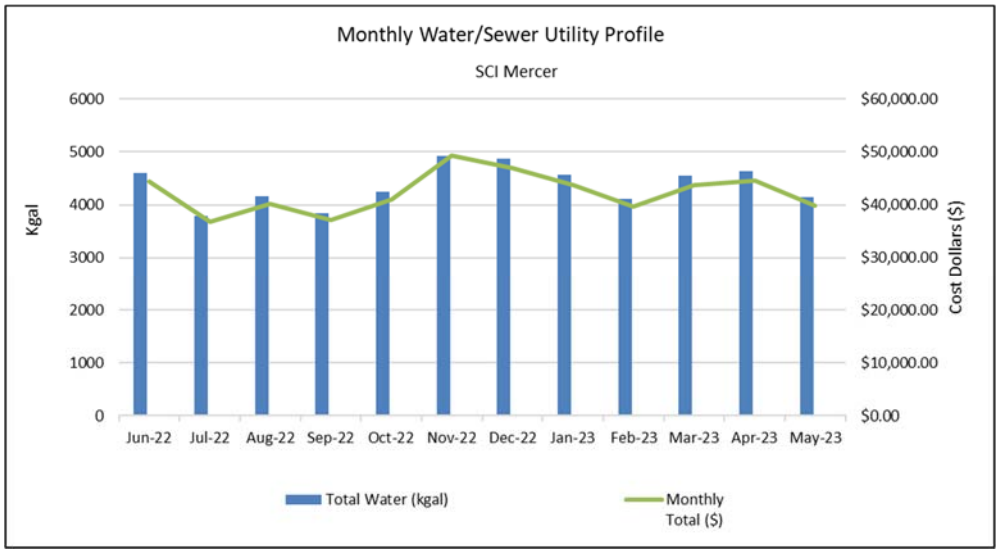

WATER RATE

The water tariff, as shown below in Table 14 and Figure 7, is a tiered rate structure. The overall average blended water rate for the 12-month baseline is $9.67 per k-gal while the effective rate or rate that will be impacted by water savings measured is $9.3010 per k-gal. A portion of the applicable tariff from Aqua Water Company is shown below for the applicable portions of the rate structure.

The effective Water Rate is $9.3010 per thousand gallons.

Table 14 – Water Rates

Water Cost – Aqua Pennsylvania (July 2023)	
Tier 1 (0-10)	$14.017 / kGal
Tier 2 (Next 23.3)	$12.315 / kGal
Tier 3 (Next 300)	$10.163 / kGal
Tier 4 (Over 333.3)	**$9.301 / kGal**

©2023 Energy Systems Group, LLC

Figure 7 – Water Tariff

AQUA PENNSYLVANIA, INC. TARIFF WATER-PA P.U.C. NO. 3

ORIGINAL PAGE 12.3

SCHEDULE OF RATES

CONSUMPTION CHARGE – COMMERCIAL AND PUBLIC

The rates under this schedule apply to all metered customers for water consumed per 1,000 gallons unless otherwise specifically identified below.

MONTHLY CONSUMPTION CHARGE

	Rate Zones 1, 2 & 3	Other
Commercial		
Up to 10,000 Gallons	$ 14.017	
Next 23,300 Gallons	12.315	
Next 300,000 Gallons	10.217	
Over 333,300 Gallons	9.351	
Public		
Up to 10,000 Gallons	$ 14.017	
Next 23,300 Gallons	12.315	
Next 300,000 Gallons	10.163	
Over 333,300 Gallons	9.301	
Consumption Charge Exceptions: Rate per 1,000 gallons		
Country Club Gardens and Sand Springs	$ 14.017	
Beech Mountain Lake	$ 6.158	
Bristol Township	$ 14.017	
Concord Park	$ 10.566	
Treasure Lake	$ 9.204	
Phoenixville: (Commercial & Public Classes)		
Up to 333,300 Gallons		$ 4.440
Next 1,333,400 Gallons		$ 3.626
Over 1,666,700 Gallons		$ 2.960

SEWER RATE

Based on the billing information provided the sewer costs are small and although a reduction in water usage will likely result in some sewer cost savings it is not easily quantifiable, and will likely be associated with operation and maintenance (O&M) which is to not be included in savings evaluations during the RFP. It is therefore assumed to be zero for the purpose of the RFP analysis. The potential for sewer-associated utility, or O&M savings will be further evaluated during the IGA.

©2023 Energy Systems Group, LLC

Utility Escalation Rates

Electricity and Natural Gas

Electricity and natural gas escalation rates used in this were derived from the RFP document. ESG used 1% escalation rate for electric, natural gas, water, and sewer.

©2023 Energy Systems Group, LLC

Appendix 3:
Fuel Switch and Central Utility Plant Analysis

(included w/ Electronic Copy only)

ESG considers this information Confidential

FUEL SWITCH & CENTRAL UTILITY PLANT ANALYSIS

The following writeup has two sections:

1. Heating Fuel Switch: Detailed analysis and comparison of the existing electric heating systems using electric resistance heating and a comparison to the proposed solution: natural gas heating and or air source heat pump heating.

2. Central Plant Cooling and Pumping: An analysis of converting to a central utility plant which adds to the above
    a. Cooling energy savings
    b. Distribution Pumping Energy

Appendix 2 - Utility Baseline Analysis section should also be referenced as it contains information on the existing electric data, a breakout of the electric usage based on a regression analysis model, the calculated effective electric, and an analysis of the local gas tariffs. It should be referenced for additional details on how the energy rates and energy breakouts were calculated and determined.

The determination is as follows for the Fuel Switch Analysis:

1. Effective Energy Rates Determined
    a. Effective Electric Rate
    b. Effective Natural gas Rate
2. Electric Baseline Breakout
    a. The kWh was broken into components using a regression analysis model
        i. Baseline (non-weather related usage)
        ii. Space heating
        iii. Space cooling
    b. Domestic hot water kWh usage breakout
    c. Kitchen kWh usage breakout
3. Portion of Energy That can be impacted
    a. Natural Gas Switch
    b. Air Source Heat Pump Switch
4. An 8760-hour modeling is set up to model the heating load
    a. Calibrated to the regression analysis model
5. Heating System Efficiency
    a. Natural Gas
    b. Air Source Heat Pump (ASHP)
6. The total energy usage is determined
    a. Using natural gas (NG)
    b. Using air source heat pumps (ASHP)
7. Applying energy rates
    a. The effective electric and natural gas rates are applied to determine the savings for the heating source change. This is also applied as applicable to domestic hot water and kitchen heating.
8. Final savings value determined and compared

©2023 Energy Systems Group, LLC

a. Switch to Natural Gas
b. Switch to Air Source Heat Pumps (ASHPs)
9. Savings Summary
10. Other Considerations

©2023 Energy Systems Group, LLC

EFFECTIVE ENERGY RATES

Three rates were utilized for this analysis.

- The existing effective electric rate per Bulletin #5
- The effective natural gas rate per Bulletin #5
- The future electric rate which anticipates an increase in electric rate costs based on a significant reduction in overall electric energy usage by switching to natural gas or air-source heat pumps.

For calculation purposes, the natural gas cost of $6.00/MCF is used per Bulletin #5. However, It should be noted that the local natural gas company tariff indicates reduced costs for new customers for years 1-3 and separate reduced rates for years 4 and 5 as described in the Utility Analysis section.

To compare the cost of each fuel source electric vs. natural gas they are converted to the same dollar per unit of energy or a dollar cost per unit of a million British thermal units (MMBtu) for an apples-to-apple comparison.

Table 1 - Effective Electric & Natural Gas Rates

Electric Rate:	$0.090/kWh	$ 26.38/ MMBtu
Future Electric Rate: (assumed increase following annual kWh reduction)	$0.095/kWh	$ 27.84 / MMBtu
Natural Gas:	$ 6.00 / MCF	$ 5.786/ MMBtu

Per RFQ Bulletin #3, the existing supplier electric contracted rate (which expires at the end of 2024) is based on an expected kWh usage that will not vary by more than 15% from the historic usage and a change of more than 15% may warrant a renegotiation of the rate. Based on an expected reduction in overall electric energy usage by converting from primarily electric resistance heating to an alternative heating technology or fuel source, an assumed rate increase was used to for sensitivity analyses. This is done to show the overall potential impact of any change.

©2023 Energy Systems Group, LLC

ELECTRIC BASELINE BREAKOUT

In order to determine the values related to any fuel switch, the existing electric usage that can be switched to natural gas has to be determined. The existing uses would include space heating, domestic hot water heating, and kitchen use. The existing systems such as geothermal water source heat pump system, recently replaced HVAC units that are heat pumps, or systems that are impractical to modify will not be converted.

Electric Resistance Space Heating (Regression Analysis) – A regression analysis was performed on the electric energy data to provide a more detailed examination of how the weather impacts the electric energy usage and what portion is impacted by heating vs cooling. The regression analysis software Option-C™ by Abraxas was used to complete this. The baseline use would include lighting, pumps, fan energy, domestic hot water, kitchen cooking, laundry, plug loads, etc. It should be noted that the majority of laundry is processed off site. Further details regarding this can be found the Appendix 2 – Utility Baseline Analysis. The regression model equation (Figure 1) and calculated breakout of the annual kWh usage is shown in Table 2.

Figure 1 - Tuned Regression Model Equation SCI Mercer :

kWh use = 19,303.205 x #days + 6115.372 x CDD + 777.836 x HDD

	Base Load		Cooling Load		Heating Load		Annual Use
Total =	19,303.205	+	6,115.372	+	777.836		
	365	days	108	CDD	6,358	HDD	
	7,045,670	kWh +	**660,460**	kWh +	**4,945,481**	kWh =	12,651,611 kWh

The following demonstrates the existing calculated kWh breakout and what portion is assumed that can be modified.

Table 2 - Regression Analysis Breakout:

Baseline Use	**7,045,670**	**kWh**
Cooling Use	**660,460**	**kWh**
Heating Use	**4,945,481**	**kWh**
Total Annual use	**12,651,611**	**kWh**

Domestic Hot Water (DHW): The existing domestic hot water (DHW) heaters use electric resistance heating. The DHW electric usage was calculated with further details found in Appendix 2 – Utility Baseline Analysis.

Kitchen Electric Use: Kitchen electric cooking use was estimated with further details shown in the Appendix – Utility Analysis.

©2023 Energy Systems Group, LLC

IMPACTABLE PORTION OF ENERGY

Natural Gas Heating Switch:

For heating, it was assumed that 75% of the electric resistance heating could be switched to natural gas. For the domestic hot water, it was also assumed that 75% could be impacted but water savings measures and controls would reduce this by 30% for a total impact value of 53%. The kitchen use was assumed at 60% During the IGA, we will validate these values further.

Table 3 - Assumes Switching to Natural Gas Heating

Switch to Natural Gas	Existing Baseline Breakout kWh	Impactable %	Est. Part Impactable kWh
Electric Resistance Space Heating	4,945,481	75%	3,709,111
Domestic Hot water Heating	2,189,371	53%	1,149,420
Kitchen Heating Use	987,353	60%	592,412
Total Impacted electric energy	**6,749,218**	**81%**	**5,450,943**

Air Source Heat Pump Switch:

This same breakout was developed for an assumed change to air-source heat pumps for heating and the majority of the domestic hot water heating. The assumptions are shown and assume only 30% of the domestic hot water is switched to heat pump heating and the kitchen equipment remains all electric.

Table 4 - Assumes Switching to Air Source Heat Pumps (ASHP)

Switch to the Air Source Heat Pump	Existing Baseline Breakout kWh	Impactable %	Est. Part Impactable kWh
Electric Resistance Space Heating	4,945,481	75%	3,709,111
Domestic Hot water Heating	2,189,371	53%	1,149,420
Kitchen Heating Use	987,353	0%	-
Total Impacted electric energy	**6,749,218**	72%	**4,858,531**

BIN HOUR MODELING

Assumptions and Inputs

©2023 Energy Systems Group, LLC

- Facility heating and cooling systems are operated continuously or 24/7 with no setback or other impact to continuous operation.
- Space heating is not performed in a significant way above 65°F outdoor air temperature as was determined by the regression analysis.
- Typical Metrological Data (TMY) from ERIE International AP (Station 725260) was used.

The regression analysis model was used to setup the heating profile for the site and was then calibrated to match the TMY data and is used as the heating profile based on HDD derived from the outdoor air temperature and 65°F heating balance point temperature calculated using the regression analysis.

kWh use = 19,303.205 x #days + 6115.372 x CDD + 777.836 x HDD

Space heating kWh use = 777.836 x HDD

This was modified/calibrated to the TMY data used to provide the same total kWh using an Excel goal seek function which provides the following modified/calibrated equation to the TMY data shown as Figure 2:

Figure 2 – Modified/calibrated Heating Model Equation

Space heating kWh use (Calibrated to TMY data) = 758.782 x HDD

A linear efficiency profile relative to outdoor air temperature was assumed and shown below in Figure 3 – Heating System Efficiency Profile:

1. Natural gas was assumed as 82% efficient at full load at 30°F and below outdoor air temperature and 72% efficient at 55° and above.
2. Air source heat pumps (ASHP) were assumed 450% (or a coefficient of performance of 4.5) at 60°F and above, and 100% efficient or a COP of 1 at 5°F and below.

Figure 3 – Heating System Efficiency Profile

NATURAL GAS		ASHP	
Heating System Efficiency		**Heating System Efficiency**	
outside Drybulb °F	Heating Eff	outside Drybulb °F	Heating Eff
30	80%	60	450%
55	72%	5	100%
>55	72%	>5	100%
slope	-0.0032	slope	0.063636
intercept	0.896	intercept	0.682

©2023 Energy Systems Group, LLC

CALCULATION: The following shows portions of January and April 8760 Bin-hr calculation. Pre and post-efficiencies are identical in calculation:

		TMY Data Location->>		ERIE Interr	Avg Eff	Avg Eff	Avg Eff	Avg Eff									
			Max-->>	91.04	80%	80%	450%	450%									
			Median-->>	48.9	76%	76%	329%	329%									
			Avg-->>	49.1	76%	76%	330%	330%					kWh to MMBtu			kWh to MMBtu
			Min-->>	8.06	72%	72%	119%	119%					293.29			293.29
(1)	(4)	(5)	(6)	(7)					218	6,518	kWh per HDD	Total at 75%	Total at 75%	NG	ASHP	ASHP
Day of	`			Average	Heating Effeciency Fuel (% eff)		Heating Effeciency Fuel (% eff)		Degree Days		758.782	Switchable kWh	Switchable MMBtu	Natural Gas MMBtu	electric use ASHP MMBtu	Electirc Use ASHP Converted to kWh
Week	Month	Day	Hour	DB (F)	Pre	Post	Pre	Post	CDD	HDD	4,945,481	3,709,111	12,647	16,227	6,323	1,854,393
5	1	1	1	30.02	80%	80%	259%	259%	-	1	1,106	829	2.83	3.54	1.36	400
5	1	1	2	30.02	80%	80%	259%	259%	-	1	1,106	829	3	3.54	1.36	400
5	1	1	3	30.02	80%	80%	259%	259%	-	1	1,106	829	3	3.54	1.36	400
5	1	1	4	30.02	80%	80%	259%	259%	-	1	1,106	829	3	3.54	1.36	400
5	1	1	5	30.02	80%	80%	259%	259%	-	1	1,106	829	3	3.54	1.36	400
7	4	18	14	53.96	72%	72%	412%	412%	-	0	349	262	1	1.23	0.30	88
7	4	18	15	59	72%	72%	444%	444%	-	0	190	142	0	0.67	0.15	45
7	4	18	16	62.06	72%	72%	450%	450%	-	0	93	70	0	0.33	0.07	22
7	4	18	17	64.94	72%	72%	450%	450%	-	0	2	1	0	0.01	0.00	0
7	4	18	18	64.04	72%	72%	450%	450%	-	0	30	23	0	0.11	0.02	7
7	4	18	19	60.98	72%	72%	450%	450%	-	0	127	95	0	0.45	0.10	29
7	4	18	20	57.92	72%	72%	437%	437%	-	0	224	168	1	0.80	0.18	53
7	4	18	21	59	72%	72%	444%	444%	-	0	190	142	0	0.67	0.15	45
7	4	18	22	57.02	72%	72%	431%	431%	-	0	252	189	1	0.90	0.21	61
7	4	18	23	57.02	72%	72%	431%	431%	-	0	252	189	1	0.90	0.21	61
7	4	18	24	57.02	72%	72%	431%	431%	-	0	252	189	1	0.90	0.21	61
1	4	19	1	57.02	72%	72%	431%	431%	-	0	252	189	1	0.90	0.21	61
1	4	19	2	57.02	72%	72%	431%	431%	-	0	252	189	1	0.90	0.21	61
1	4	19	3	55.94	72%	72%	424%	424%	-	0	286	215	1	1.02	0.24	70
1	4	19	4	55.04	72%	72%	418%	418%	-	0	315	236	1	1.12	0.27	78
1	4	19	5	53.96	72%	72%	412%	412%	-	0	349	262	1	1.23	0.30	88
1	4	19	6	53.06	73%	73%	406%	406%	-	0	377	283	1	1.33	0.33	96
1	4	19	7	55.04	72%	72%	418%	418%	-	0	315	236	1	1.12	0.27	78
1	4	19	8	60.98	72%	72%	450%	450%	-	0	127	95	0	0.45	0.10	29
1	4	19	9	66.02					-	-	-	-	-			
1	4	19	10	69.98					-	-	-	-	-			
1	4	19	11	71.06					-	-	-	-	-			
1	4	19	12	68					-	-	-	-	-			
1	4	19	13	71.06					-	-	-	-	-			

APPLYING ENERGY RATES & DETERMINING SAVINGS

Table 5 – Impactable vs Non-Impactable Electric Baseline

	Base kWh	Base MMBtu
Total baseline	12,651,611	43,137
Base portion (Not impacted)	7,200,668	24,551
Base Portion Impacted	5,450,943	18,586

Using the Base Portion Impacted (Table 5), the base electric rates, and not accounting for any increase in electric costs from a reduction in usage, the impacted energy in Table 6 – Impacted Energy below shows switching to natural gas heating or ASHPs would **savings $357,073 or $228,822 per year** respectfully as shown in Table 7 – Natural Gas and ASHP Cost Savings.

Table 6 – Impacted Energy

	Base (Impacted) kWh	Base (Impacted) MMBtu	NG MMBtu	ASHP MMBtu
Electric Space Heating	3,709,111	12,647	16,227	6,323
DHW	1,149,420	3,919	4,260	1,568
Kitchen	592,412	2,020	2,525	2,020
Total Impacted Energy Use	**5,450,943**	**18,586**	**23,012**	**9,910**

Note: The total natural gas energy usage is higher than the base due to being less than 100% efficient.

Table 7 – Natural Gas and ASHP Cost Savings

	Electric Resistance	NG	ASHP
$/MMBtu	$ 26.376	$ 5.786	$ 26.376
Annual Cost =	$ 490,217	$ 133,143	$ 261,395
Annual Saved =	**0**	**$ 357,073**	**$ 228,822**
		NG vs ASHP Annual Cost =	**$ 128,252**

<u>Electric Rate Change</u>

As noted in Bulletin #3, a change in electric usage may cause an increase in electric rates. Analyzing a fuel switch with that increase is noted in this section. Accordingly, the following is a similar analysis to the above but accounts for an increase in electric rates from a reduced usage by switching to natural gas or air source heat pumps and an assumed overall efficient improvement from other measures such as converting portions of lighting to LED. As assumed increase in the effective electric rate is shown in Figure 4.

Figure 4 – Assumed Future Effective Electric Rate Increase from Decreased kWh Usage

©2023 Energy Systems Group, LLC

Base Portion Not Impacted	24,551	MMBtu
	10%	% Savings from other measures
Base Portion Not Impacted (Post)	**22,096**	MMBtu Post

$/KWh	$/MMBtu	
$ 0.090	$ 26.38	Current Effective Electric Rate
$ 0.005	$ 1.47	Rate Increase (from reduced electric usage)
$ 0.095	$ 27.84	Future Effective Electric Rate

Using the future effective electric rates shown in Figure 4 to account for any increase in electric costs from a reduction in usage, and the total impact of the electric rate change to the remaining electric usage, **Table 8 - Natural Gas and ASHP Cost Savings (with electric rate increase)** below shows switching to natural gas heating or ASHPs would produce savings $324,695 and $181,921, respectively, but would have an overall **increase in electric costs of $59,613** (Table 8) and providing a **total natural gas or ASHP savings of $265,082 or $122,308, per year (including the increased related costs of electricity).**

Table 8 - Natural Gas and ASHP Cost Savings (with electric rate increase)

	Electric Resistance	NG	ASHP
Total Impacted Energy Use	18,586	23,012	9,910
Impacted $/MMBtu	$ 27.842	$ 5.786	$ 27.842
Base Portion Not Impacted	22,096	22,096	22,096
Base Portion $/MMBtu	$ 27.842	$ 27.842	$ 27.842
Annual Cost =	$ 1,132,646	$ 748,339	$ 891,113
Annual Saved vs. Existing =	**$ -**	**$ 324,695**	**$ 181,921**
Electirc Cost Saved Base Portion Not Impacted	**$ (59,613)**	**$ 265,082**	**$ 122,308**
		NG vs ASHP Annual Cost =	**$ 142,774**

Note that cost savings values are highly dependent on existing and future natural gas and electric rates.

©2023 Energy Systems Group, LLC

SAVINGS SUMMARY (FUEL SWITCH)

Based on the assumptions and calculations presented

Assuming no increase in electric rates from an electric usage decrease:

Switching to natural gas would **save $357,073 per year** (no increase in electric rates)

Switching to air source heat pumps would **save $228,822 per year** (no increase in electric rates)

Assuming an electric rate increase from an electric usage decrease:

Switching to natural gas would **save $265,082 per year** (assuming electric rate increase)

Switching to air-source heat pumps would **save $122,308 per year** (assuming electric rate increase)

Note that cost savings values are highly dependent on existing and future natural gas and electric rates.

OTHER CONSIDERATIONS

For the comparison of the air source heat pumps (ASHPs) and Natural Gas there are additional considerations that impact the proposed solutions. Some of these can easily be quantitated while others are subjective. The following Table 9 - Other Considerations of Air Source Heat Pumps vs. Natural Gas, shows other non-fuel cost-related considerations between the ASHPs and natural gas when choosing to convert the facility's primary heating from electric resistance.

©2023 Energy Systems Group, LLC

Table 9 – Other Considerations of Air Source Heat Pumps vs. Natural Gas

AIR SOURCE HEAT PUMPS	NATURAL GAS

PROS
• Simpler installation
• Lower Cost of installation
• No introduction of carbon monoxide potential produced systems (lower life safety issue)
• No backup fuel system required (propane farm and blending station)
• Potential net zero using Solar PV if remaining all-electric facility
	PROS
	• No need to install 3rd generator for backup capacity. The existing two generators currently have to run during cold months,
	• 2nd generator is 100% redundant
	• Energy Diversity – Energy use will be diversified
	• Higher savings than ASHPs
	• The backup fuel source will be required
	• Will significantly reduce the winter peak electric demand (peak demand occurs in winter)
	  o Peak Demand Savings for any applicable ratchet demand clause
	  o Winter overall electric demand savings

AIR SOURCE HEAT PUMPS	**NATURAL GAS**
CONS • Will not likely reduce peak winter electric demand o No Peak Demand Savings for any applicable ratchet demand clause • 3rd Generator needed for redundancy	CONS • May require backup fuel source installed (propane blending station) • Potential associated ongoing maintenance costs for propane farm and blending station • Higher initial costs than ASHP • Requires more engineering time for design and code compliance issues • Introduction of potential carbon monoxide • Gas lines have to be added • Cannot be net zero using solar PV system. • Reduction in electric use will likely cause electric rate to increase at least on supply side. • More complex construction vs ASHPs

©2023 Energy Systems Group, LLC

CENTRAL PLANT COOLING AND PUMPING ANALYSIS

COOLING IMPACTABLE PORTION OF ENERGY (Cooling)

Cooling to Central Plant Chiller:

The existing cooling energy usage is based on the regression analysis shown in Figure 1. This provided an existing cooling energy of 660,460 kWh/year. It was assumed that 85% of the existing cooling would be converted to the central plant. During the IGA, we will validate these values further.

Table 10 – Cooling Energy

Switch to Natural Gas	Existing Baseline Breakout kWh	Impactable %	Est. Part Impactable kWh
Cooling Energy	660,460	85%	561,391

COOLING ENERGY SAVINGS

Figure 5 – Cooling Energy Savings (Central Plant)

CUP Cooling Savings

GIVEN:

Existing Cooling Energy Use	=	660,460	kWh
Portion Impactable	=	85%	%
Cooling Energy Impactable	=	561,391	kWh

ASSUMPTION:

Existing AVG Cooling Efficiency	=	1.45	Kw/Ton
New Cooling Avg Efficiency	=	0.62	Kw/Ton

FORMULA:

Energy Savings (Kwh)=(Cooling Energy Impactable * (New Cooling Avg Efficiency / Existing Avg Cooling Efficiency)

CALCULATION:

Cooling Impactable Energy	X (	New Cooling Avg Efficiency	Existing Cooling Avg Efficiency	Savings	
561,391	X (	0.62 /	1.45)	322,388	**kWH Saved**

©2023 Energy Systems Group, LLC

PUMPING ENERGY

1. For the purpose of calculations the chilled water pumping energy is included in the pre and post efficiency difference and does not have an independent calculation

2. The hot water heating pumping energy assumes the following:
   - 75hp pump at 94% efficiency with a VFD that is 98% efficient
   - Pump is operated 8760 hrs per year
   - Typical Metrological Data (TMY) from ERIE International AP (Station 725260) was used to determined the operating patter of the VFD based on the following assumptions and associated Motor Profile

Figure 6 – Heating Profile

Heating (Post)	
Profile Motor	
outside	VFD
drybulb	SPEED
5	100%
65	40%
>65	40%
slope	-0.01
intercept	1.050

Figure 7 – Hot Water Motor Operating Pattern

MOTOR PATTERN		Profile Motor
% Speed	% Speed	Post
95-100%	100%	16
85-95%	90%	569
75-85%	80%	894
65-75%	70%	1,726
55-65%	60%	1,367
45-55%	50%	1,177
35-45%	40%	3,011
< 35%	30%	-
	Total Hrs -->>	8,760

©2023 Energy Systems Group, LLC

The following is the assumptions used for determine the Energy usage of hot water pumps:

Figure 8 – Hot Water Pumping Variables

Proposed (Post) Variables	Total Operating Hours per Year (Post)	=	8,760	hrs	Assumption	Engineering Est.
	Motor Horse Power (Post)	=	75.0	hp	Calculated	Engineering Est.
	Motor Rated Efficiency (Post)	=	94.0%	%	Assumption	Engineering Est.
	VFD Efficiency (Post) (100% if none)	=	98.0%	%	Assumption	Engineering Est.
	VFD Min Speed (Post) (100% if none)	=	40.0%	%	Assumption	Engineering Est.
	Operating Months per year	=	12.0	months	Assumption	Engineering Est.
	Motor Load Factor	=	0.75		Assumption	Engineering Est.

Figure 9 – Hot Water Central Plant Pumping Energy

Calculation Proposed kWh

% Flow	hp x	% Flow x	Exp. x)	hp to kWh	/ eff. =	=kW @ speed x	hrs @ speed x	kWh
95-100%	75.00	100%	2.7	0.746	92.0%	45.6	102	4,644
85-95%	75.00	90%	2.7	0.746	92.0%	34.3	576	19,769
75-85%	75.00	80%	2.7	0.746	92.0%	25.0	1,452	36,250
65-75%	75.00	70%	2.7	0.746	92.0%	17.4	2,723	47,414
55-65%	75.00	60%	2.7	0.746	92.0%	11.5	2,234	25,659
45-55%	75.00	50%	2.7	0.746	92.0%	7.0	1,673	11,742
35-45%	75.00	40%	2.7	0.746	92.0%	3.8	-	-
< 35%	75.00	30%	2.7	0.746	92.0%	1.8	-	-
20%	75.00	20%	2.7	0.746	92.0%	0.6	-	-
10%	75.00	10%	2.7	0.746	92.0%	0.1	-	-
0%	75.00	0%	2.7	0.746	92.0%	0.0	-	-
						Hot Water Pump KWh/yr usage -->	8,760	**145,479**

Note: The efficiency shown above is a combination of motor and VFD efficiency.

©2023 Energy Systems Group, LLC

Appendix 4:
Energy Calculations including Lighting Line by Line

(included w/ Electronic Copy only)

ESG considers this information Confidential

CENTRAL PLANT AND FUEL SWITCH SAVINGS

Note: Appendix 3 – Fuel Switch & Central Plant Analysis should also be referenced for additional details.

For heating, it was assumed that 75% of the electric resistance heating could be switched to natural gas. For the domestic hot water, it was also assumed that 75% could be impacted by water savings measures and controls would reduce this by 30% for a total impact value of 53%. The kitchen use was assumed at 60% During the IGA, we will validate these values further. The breakout was determined using a regression analysis model and other methods as discussed in Appendix 2 – Utility Baseline Analysis and Appendix 3 – Fuel Switch & Central Utility Plant Analysis

Switching to Natural Gas Heating

Switch to Natural Gas	Existing Baseline Breakout kWh	Impactable %	Est. Part Impactable kWh
Electric Resistance Space Heating	4,945,481	75%	3,709,111
Domestic Hot water Heating	2,189,371	53%	1,149,420
Kitchen Heating Use	987,353	60%	592,412
Total Impacted electric energy	**6,749,218**	**81%**	**5,450,943**

The following shows portions of January and April 8760 Bin-hr calculation used for determining the NG use based on the regression analysis model discussed in Appendix 2 – Utility Baseline Analysis and Appendix 3 – Fuel Switch & Central Utility Plant Analysis.

	TMY Data Location->>			ERIE Interr	Avg Eff	Avg Eff	Avg Eff	Avg Eff								
			Max-->>	91.04	80%	80%	450%	450%								
			Median-->>	48.9	76%	76%	329%	329%								
			Avg-->>	49.1	76%	76%	330%	330%					kWh to MMBtu			kWh to MMBtu
			Min-->>	8.06	72%	72%	119%	119%					293.29			293.29
(1)	(4)	(5)	(6)	(7)					218	6,518	kWh per HDD	Total at 75%	Total at 75%	NG	ASHP	ASHP
Day of	`			Average	Heating Effeciency Fuel (% eff)		Heating Effeciency Fuel (% eff)		Degree Days		758.782	Switchable kWh	Switchable MMBtu	Natural Gas MMBtu	electric use ASHP MMBtu	Bectirc Use ASHP Converted to kWh
Week	Month	Day	Hour	DB (F)	Pre	Post	Pre	Post	CDD	HDD	4,945,481	3,709,111	12,647	16,227	6,323	1,854,393
5	1	1	1	30.02	80%	80%	259%	259%	-	1	1,106	829	2.83	3.54	1.36	400
5	1	1	2	30.02	80%	80%	259%	259%	-	1	1,106	829	3	3.54	1.36	400
5	1	1	3	30.02	80%	80%	259%	259%	-	1	1,106	829	3	3.54	1.36	400
5	1	1	4	30.02	80%	80%	259%	259%	-	1	1,106	829	3	3.54	1.36	400
5	1	1	5	30.02	80%	80%	259%	259%	-	1	1,106	829	3	3.54	1.36	400
7	4	18	14	53.96	72%	72%	412%	412%	-	0	349	262	1	1.23	0.30	88
7	4	18	15	59	72%	72%	444%	444%	-	0	190	142	0	0.67	0.15	45
7	4	18	16	62.06	72%	72%	450%	450%	-	0	93	70	0	0.33	0.07	22
7	4	18	17	64.94	72%	72%	450%	450%	-	0	2	1	0	0.01	0.00	0
7	4	18	18	64.04	72%	72%	450%	450%	-	0	30	23	0	0.11	0.02	7
7	4	18	19	60.98	72%	72%	450%	450%	-	0	127	95	0	0.45	0.10	29
7	4	18	20	57.92	72%	72%	437%	437%	-	0	224	168	1	0.80	0.18	53
7	4	18	21	59	72%	72%	444%	444%	-	0	190	142	0	0.67	0.15	45
7	4	18	22	57.02	72%	72%	431%	431%	-	0	252	189	1	0.90	0.21	61
7	4	18	23	57.02	72%	72%	431%	431%	-	0	252	189	1	0.90	0.21	61
7	4	18	24	57.02	72%	72%	431%	431%	-	0	252	189	1	0.90	0.21	61
1	4	19	1	57.02	72%	72%	431%	431%	-	0	252	189	1	0.90	0.21	61
1	4	19	2	57.02	72%	72%	431%	431%	-	0	252	189	1	0.90	0.21	61
1	4	19	3	55.94	72%	72%	424%	424%	-	0	286	215	1	1.02	0.24	70
1	4	19	4	55.04	72%	72%	418%	418%	-	0	315	236	1	1.12	0.27	78
1	4	19	5	53.96	72%	72%	412%	412%	-	0	349	262	1	1.23	0.30	88
1	4	19	6	53.06	73%	73%	406%	406%	-	0	377	283	1	1.33	0.33	96
1	4	19	7	55.04	72%	72%	418%	418%	-	0	315	236	1	1.12	0.27	78
1	4	19	8	60.98	72%	72%	450%	450%	-	0	127	95	0	0.45	0.10	29
1	4	19	9	66.02					-	-	-	-	-			
1	4	19	10	69.98					-	-	-	-	-			
1	4	19	11	71.06					-	-	-	-	-			
1	4	19	12	68					-	-	-	-	-			
1	4	19	13	71.06					-	-	-	-	-			

Central Plant Cooling Energy Savings Calculation:

CUP Cooling Savings

GIVEN:

Existing Cooling Energy Use	=	660,460	kWh
Portion Impactable	=	85%	%
Cooling Energy Impactable	=	561,391	kWh

ASSUMPTION:

Existing AVG Cooling Efficiency	=	1.45	Kw/Ton
New Cooling Avg Efficiency	=	0.62	Kw/Ton

FORMULA:

Energy Savings (Kwh)=(Cooling Energy Impactable * (New Cooling Avg Efficiency / Existing Avg Cooling Efficiency)

CALCULATION:

Cooling Impactable Energy	X (	New Cooling Avg Efficiency	Existing Cooling Avg Efficiency	Savings	
561,391	X (	0.62 /	1.45)	322,388	**kWH Saved**

Hot Water Central Plant Pumping Energy

Calculation Proposed kWh

% Flow	hp x	% Flow x	Exp. x)	hp to kWh	/ eff. =	=kW @ speed x	hrs @ speed x	kWh
95-100%	75.00	100%	2.7	0.746	92.0%	45.6	102	4,644
85-95%	75.00	90%	2.7	0.746	92.0%	34.3	576	19,769
75-85%	75.00	80%	2.7	0.746	92.0%	25.0	1,452	36,250
65-75%	75.00	70%	2.7	0.746	92.0%	17.4	2,723	47,414
55-65%	75.00	60%	2.7	0.746	92.0%	11.5	2,234	25,659
45-55%	75.00	50%	2.7	0.746	92.0%	7.0	1,673	11,742
35-45%	75.00	40%	2.7	0.746	92.0%	3.8	-	-
< 35%	75.00	30%	2.7	0.746	92.0%	1.8	-	-
20%	75.00	20%	2.7	0.746	92.0%	0.6	-	-
10%	75.00	10%	2.7	0.746	92.0%	0.1	-	-
0%	75.00	0%	2.7	0.746	92.0%	0.0	-	-
						Hot Water Pump KWh/yr usage -->	8,760	**145,479**

Note: The efficiency shown above is a combination of motor and VFD efficiency.

ID #	Location			Existing Fixture				Proposed Fixture				Usage		
	Building # : Name	Floor	Sub Area / Room	Fixture	Quantity	Input Wattage	Hours of Operation	ECM	Quantity	Input Wattage	Hours of Operation	Pre	Post	Savings
1	1 : Admin	Penthouse	MECHANICAL	4' Wrap BP 2L 32W T8 & 1L NL Lamp	3	59	520	RT, 4' 10.5W DE LED 3L	3	32	520	92	49	43
2	1 : Admin	Penthouse	MECHANICAL	4' Wrap BP 2L 32W T8	18	59	390	RT, 4' 10.5W DE LED 2L	18	21	390	414	147	267
3	1 : Admin	Penthouse	IT	4' Wrap BP 2L 32W T8	2	59	390	RT, 4' 10.5W DE LED 2L	2	21	390	46	16	30
4	1 : Admin	1st	SECURITY	2X4 Prism Rec 2L 32W T8	13	59	3640	RT, 4' 10.5W DE LED 2L	13	21	3640	2,792	994	1,798
5	1 : Admin	1st	SECURITY	2X4 Prism Rec 2L 32W T8 & 1 NL Lamp	2	90	3640	RT, 4' 10.5W DE LED 3L	2	32	3640	655	229	426
6	1 : Admin	1st	OFFICE 153	4' Wrap BP 2L 32W T8	1	59	2730	RT, 4' 10.5W DE LED 2L	1	21	2730	161	57	104
7	1 : Admin	1st	MENS RESTROOM	4' Wrap BP 2L 32W T8	1	59	1092	RT, 4' 10.5W DE LED 2L	1	21	1092	64	23	41
8	1 : Admin	1st	WOMENS RESTROOM	4' Wrap BP 2L 32W T8	1	59	1092	RT, 4' 10.5W DE LED 2L	1	21	1092	64	23	41
9	1 : Admin	1st	OFFICE 156	4' Wrap BP 2L 32W T8	1	59	2730	RT, 4' 10.5W DE LED 2L	1	21	2730	161	57	104
10	1 : Admin	1st	LOBBY	7" Rec Can CFL 26W 4P 2L	19	50	8760	RC LED Retrofit Kit 2000 Lm 8" Adj. 2000 Lm	19	17	8760	8,322	2,829	5,493
11	1 : Admin	1st	LOBBY	2X4 Par Rec 3L 32W T8	1	89	8760	RT, 4' 10.5W DE LED 3L	1	32	8760	780	276	504
12	1 : Admin	1st	LOBBY	Exit Sign LED	2	3	8760	No Action - Existing Efficient/LED Fixture	2	3	8760	53	53	0
13	1 : Admin	1st	JANITOR	4' Wrap BP 2L 32W T8	2	59	1000	RT, 4' 10.5W DE LED 2L	2	21	1000	118	42	76
14	1 : Admin	1st	JANITOR	4' Wrap BP 2L 32W T8 & 1L NL Lamp	1	59	1000	RT, 4' 10.5W DE LED 3L	1	32	1000	59	32	28
15	1 : Admin	1st	VISITOR RESTROOM	4' Wrap BP 2L 32W T8	2	59	1456	RT, 4' 10.5W DE LED 2L	2	21	1456	172	61	111
16	1 : Admin	1st	OFFICE 110	2X4 Par Rec 3L 32W T8	3	89	3640	RT, 4' 10.5W DE LED 3L	3	32	3640	972	344	628
17	1 : Admin	1st	OFFICE 110	2X4 Par Rec 3L 32W T8 No Lamps	2	0	3640	RT, 4' 10.5W DE LED 3L	2	32	3640	0	229	-229
18	1 : Admin	1st	OFFICE 111	2X4 Par Rec 3L 32W T8	2	89	2730	RT, 4' 10.5W DE LED 3L	2	32	2730	486	172	314
19	1 : Admin	1st	HALLWAY	2x2 Par Rec 2L 32W U6 T8	6	59	8760	RT, 2' 7W DE LED 3L, 2x2 Refl Kit	6	21	8760	3,101	1,104	1,997
20	1 : Admin	1st	OFFICE 103	2X4 Par Rec 3L 32W T8	3	89	2730	RT, 4' 10.5W DE LED 3L	3	32	2730	729	258	471
21	1 : Admin	1st	OFFICE 104	2X4 Par Rec 3L 32W T8	2	89	2730	RT, 4' 10.5W DE LED 3L	2	32	2730	486	172	314
22	1 : Admin	1st	OFFICE 105	2X4 Par Rec 3L 32W T8	4	89	2730	RT, 4' 10.5W DE LED 3L	4	32	2730	972	344	628
23	1 : Admin	1st	WOMENS RESTROOM	4' Wrap BP 2L 32W T8	1	59	1092	RT, 4' 10.5W DE LED 2L	1	21	1092	64	23	41
24	1 : Admin	1st	MENS RESTROOM	4' Wrap BP 2L 32W T8	1	59	1092	RT, 4' 10.5W DE LED 2L	1	21	1092	64	23	41
25	1 : Admin	1st	BUSINESS OFFICE	2X4 Par Rec 3L 32W T8	14	89	3094	RT, 4' 10.5W DE LED 3L	14	32	3094	3,855	1,364	2,491
26	1 : Admin	1st	BUSINESS OFFICE	2x2 Par Rec 2L 32W U6 T8	1	59	3094	RT, 2' 7W DE LED 3L, 2x2 Refl Kit	1	21	3094	183	65	118
27	1 : Admin	1st	CONFERENCE	2X4 Par Rec 3L 32W T8	8	89	1170	RT, 4' 10.5W DE LED 3L	8	32	1170	833	295	538
28	1 : Admin	1st	OFFICE 116	2X4 Par Rec 3L 32W T8	2	89	2730	RT, 4' 10.5W DE LED 3L	2	32	2730	486	172	314
29	1 : Admin	1st	OFFICE 117	2X4 Par Rec 3L 32W T8	2	89	2730	RT, 4' 10.5W DE LED 3L	2	32	2730	486	172	314
30	1 : Admin	1st	OFFICE 118	2X4 Par Rec 3L 32W T8	2	89	2730	RT, 4' 10.5W DE LED 3L	2	32	2730	486	172	314
31	1 : Admin	1st	OFFICE 119	2X4 Par Rec 3L 32W T8	2	89	2730	RT, 4' 10.5W DE LED 3L	2	32	2730	486	172	314
32	1 : Admin	1st	OFFICE 120	2X4 Par Rec 3L 32W T8	2	89	2730	RT, 4' 10.5W DE LED 3L	2	32	2730	486	172	314
33	1 : Admin	1st	OFFICE 121	2X4 Par Rec 3L 32W T8	2	89	2730	RT, 4' 10.5W DE LED 3L	2	32	2730	486	172	314
34	1 : Admin	1st	OFFICE 122	2X4 Par Rec 3L 32W T8	2	89	2730	RT, 4' 10.5W DE LED 3L	2	32	2730	486	172	314
35	1 : Admin	1st	OFFICE 123	2X4 Par Rec 3L 32W T8	2	89	2730	RT, 4' 10.5W DE LED 3L	2	32	2730	486	172	314
36	1 : Admin	1st	OFFICE 127	2X4 Par Rec 3L 32W T8	2	89	2730	RT, 4' 10.5W DE LED 3L	2	32	2730	486	172	314
37	1 : Admin	1st	OFFICE 126	2X4 Par Rec 3L 32W T8	2	89	2730	RT, 4' 10.5W DE LED 3L	2	32	2730	486	172	314
38	1 : Admin	1st	OFFICE 125	2X4 Par Rec 3L 32W T8	2	89	2730	RT, 4' 10.5W DE LED 3L	2	32	2730	486	172	314
39	1 : Admin	1st	OFFICE 124	2X4 Par Rec 3L 32W T8	2	89	2730	RT, 4' 10.5W DE LED 3L	2	32	2730	486	172	314
40	1 : Admin	1st	BUSINESS OFFICE	4' Undercabinet BP 2L 32W T8	12	59	3640	RT, 4' 10.5W DE LED 2L	12	21	3640	2,577	917	1,660
41	1 : Admin	1st	HALLWAY	2X4 Prism Rec 2L 32W T8	8	59	8760	RT, 4' 10.5W DE LED 2L	8	21	8760	4,135	1,472	2,663
42	1 : Admin	1st	HALLWAY	2X4 Prism Rec 2L 32W T8 & 1 NL Lamp	4	90	8760	RT, 4' 10.5W DE LED 3L	4	32	8760	3,154	1,104	2,050
43	1 : Admin	1st	MAIL ROOM 129	2X4 Prism Rec 2L 32W T8	16	59	3640	RT, 4' 10.5W DE LED 2L	16	21	3640	3,436	1,223	2,213
44	1 : Admin	1st	OFFICE 134	2X4 Par Rec 3L 32W T8	1	89	2730	RT, 4' 10.5W DE LED 3L	1	32	2730	243	86	157
45	1 : Admin	1st	OFFICE 133	2X4 Prism Rec 2L 32W T8	3	59	2730	RT, 4' 10.5W DE LED 2L	3	21	2730	483	172	311
46	1 : Admin	1st	OFFICE 132	2X4 Par Rec 3L 32W T8	2	89	2730	RT, 4' 10.5W DE LED 3L	2	32	2730	486	172	314
47	1 : Admin	1st	OFFICE 131	2X4 Par Rec 3L 32W T8	2	89	2730	RT, 4' 10.5W DE LED 3L	2	32	2730	486	172	314
48	1 : Admin	1st	ENTRY 130	2X4 Prism Rec 2L 32W T8 & 1 NL Lamp	1	90	8760	RT, 4' 10.5W DE LED 3L	1	32	8760	788	276	512
49	1 : Admin	1st	ENTRY 130	Exit Sign LED	1	3	8760	No Action - Existing Efficient/LED Fixture	1	3	8760	26	26	0
50	1 : Admin	1st	STORAGE 128	4' Wrap BP 2L 32W T8	1	59	750	RT, 4' 10.5W DE LED 2L	1	21	750	44	16	29
51	1 : Admin	1st	BREAK ROOM 135	2X4 Prism Rec 2L 32W T8	7	59	1170	RT, 4' 10.5W DE LED 2L	7	21	1170	483	172	311
52	1 : Admin	1st	BREAK ROOM 135	2X4 Prism Rec 2L 32W T8 & 1 NL Lamp	1	90	1170	RT, 4' 10.5W DE LED 3L	1	32	1170	105	37	68
53	1 : Admin	1st	OFFICE 136	2X4 Par Rec 3L 32W T8	2	89	2730	RT, 4' 10.5W DE LED 3L	2	32	2730	486	172	314
54	1 : Admin	1st	OFFICE 138	2X4 Par Rec 3L 32W T8	2	89	2730	RT, 4' 10.5W DE LED 3L	2	32	2730	486	172	314
55	1 : Admin	1st	STORAGE 137	4' Wrap BP 2L 32W T8	2	59	1000	RT, 4' 10.5W DE LED 2L	2	21	1000	118	42	76
56	1 : Admin	1st	MENS RESTROOM/LOCKER	4' Wrap BP 2L 32W T8	23	59	4368	RT, 4' 10.5W DE LED 2L	23	21	4368	5,927	2,110	3,818
57	1 : Admin	1st	MENS RESTROOM/LOCKER	4' Wrap BP 2L 32W T8 & 1L NL Lamp	2	59	4368	RT, 4' 10.5W DE LED 3L	2	32	4368	515	275	240
58	1 : Admin	1st	MENS RESTROOM/LOCKER	Exit Sign LED	2	3	8760	No Action - Existing Efficient/LED Fixture	2	3	8760	53	53	0
59	1 : Admin	1st	MENS RESTROOM/LOCKER	7" Rec Can CFL 26W 4P 2L	2	50	4368	RC LED Retrofit Kit 2000 Lm 8" Adj. 2000 Lm	2	17	4368	437	149	288
60	1 : Admin	1st	TRAINING 141	2X4 Par Rec 3L 32W T8	13	89	1170	RT, 4' 10.5W DE LED 3L	13	32	1170	1,354	479	875
61	1 : Admin	1st	TRAINING 142	2X4 Par Rec 3L 32W T8	12	89	1170	RT, 4' 10.5W DE LED 3L	12	32	1170	1,250	442	807
62	1 : Admin	1st	OFFICE	2X4 Par Rec 3L 32W T8	9	89	3094	RT, 4' 10.5W DE LED 3L	9	32	3094	2,478	877	1,601
63	1 : Admin	1st	WOMENS RESTROOM/LOCKER	7" Rec Can CFL 26W 4P 2L	2	50	4368	RC LED Retrofit Kit 2000 Lm 8" Adj. 2000 Lm	2	17	4368	437	149	288
64	1 : Admin	1st	WOMENS RESTROOM/LOCKER	4' Wrap BP 2L 32W T8	4	59	4368	RT, 4' 10.5W DE LED 2L	4	21	4368	1,031	367	664
65	1 : Admin	1st	WOMENS RESTROOM/LOCKER	4' Wrap BP 2L 32W T8 & 1L NL Lamp	1	59	5824	RT, 4' 10.5W DE LED 3L	1	32	5824	344	183	160
66	1 : Admin	1st	WOMENS RESTROOM/LOCKER	Drum CFL 13W 2P 3L	1	48	5824	RT, LED 5.5W 2P GX23 H 3L	1	17	5824	280	96	183
67	1 : Admin	1st	GYM 147	2X4 Prism Rec 2L 32W T8	11	59	3094	RT, 4' 10.5W DE LED 2L	11	21	3094	2,008	715	1,293
68	1 : Admin	1st	ARMORY 149	2X4 Prism Rec 2L 32W T8	3	59	1000	RT, 4' 10.5W DE LED 2L	3	21	1000	177	63	114
69	1 : Admin	1st	LOCKSMITH	4' Wrap BP 2L 32W T8	2	59	1000	RT, 4' 10.5W DE LED 2L	2	21	1000	118	42	76
70	1 : Admin	1st	TOOL ROOM	4' Wrap BP 2L 32W T8	2	59	1000	RT, 4' 10.5W DE LED 2L	2	21	1000	118	42	76
71	1 : Admin	1st	LONG CENTER HALLWAY	2X4 Prism Rec 2L 32W T8	9	59	8760	RT, 4' 10.5W DE LED 2L	9	21	8760	4,652	1,656	2,996
72	1 : Admin	1st	LONG CENTER HALLWAY	2X4 Prism Rec 2L 32W T8 & 1 NL Lamp	4	90	8760	RT, 4' 10.5W DE LED 3L	4	32	8760	3,154	1,104	2,050
73	1 : Admin	1st	CONTROL 101/100	2X4 Prism Rec 2L 32W T8	13	59	364	RT, 4' 10.5W DE LED 2L	13	21	364	279	99	180
74	1 : Admin	1st	CONTROL 101/100	2X4 Par Rec 3L 32W T8	2	89	364	RT, 4' 10.5W DE LED 3L	2	32	364	65	23	42
75	1 : Admin	1st	CONTROL 101/100	2x2 Flat Panel Rec LED 30W	1	30	364	No Action - Existing Efficient/LED Fixture	1	30	364	11	11	0
76	1 : Admin	1st	CONTROL 101/100	4' Wrap BP 2L 32W T8	3	59	364	RT, 4' 10.5W DE LED 2L	3	21	364	64	23	41
77	1 : Admin	1st	HALLWAY	2X4 Prism Rec 2L 32W T8	5	59	8760	RT, 4' 10.5W DE LED 2L	5	21	8760	2,584	920	1,664
78	1 : Admin	1st	HALLWAY	2X4 Prism Rec 2L 32W T8 & 1 NL Lamp	2	90	8760	RT, 4' 10.5W DE LED 3L	2	32	8760	1,577	552	1,025
79	1 : Admin	1st	HALLWAY	2x2 Prism Rec 3L FT40 TP	11	102	8760	RT, LED 17W 4P 2G11 3L TP	11	51	8760	9,829	4,914	4,914
80	1 : Admin	1st	HALLWAY	Exit Sign LED TP	1	3	8760	No Action - Existing Efficient/LED Fixture	1	3	8760	26	26	0
81	1 : Admin	Exterior	FLAG POLE	In Ground Hal 75W PAR38	4	75	4380	LED 13W PAR38 Replacement	4	13	4380	1,314	228	1,086
82	2 : Deputy/Visitation	1st	HALLWAY	2x2 Prism Rec 3L FT40 TP	4	102	8760	RT, LED 17W 4P 2G11 3L TP	4	51	8760	3,574	1,787	1,787

83	2 : Deputy/Visitation	1st	SCANNING ROOM	2x2 Prism Rec 3L FT40 TP	6	102	8760	RT, LED 17W 4P 2G11 3L TP	6	51	8760	5,361	2,681	2,681
84	2 : Deputy/Visitation	1st	MECHANICAL	4' Industrial LED 18W T8 ULB 1L	8	18	520	RT, 4' 10.5W DE LED 1L	8	11	520	75	44	31
85	2 : Deputy/Visitation	1st	MECHANICAL	4' Wrap LED 18W T8 ULB 2L	1	36	520	RT, 4' 10.5W DE LED 2L	1	21	520	19	11	8
86	2 : Deputy/Visitation	1st	OFFICE	2x2 Prism Rec 3L FT40 TP	2	102	3640	RT, LED 17W 4P 2G11 3L TP	2	51	3640	743	371	371
87	2 : Deputy/Visitation	1st	OFFICE	2x2 Prism Rec 3L FT40 TP	2	102	3640	RT, LED 17W 4P 2G11 3L TP	2	51	3640	743	371	371
88	2 : Deputy/Visitation	1st	INMATE HALLWAY	2x2 Prism Rec 3L FT40 TP	4	102	8760	RT, LED 17W 4P 2G11 3L TP	4	51	8760	3,574	1,787	1,787
89	2 : Deputy/Visitation	1st	INMATE HALLWAY	2x2 Prism Rec 3L FT40 TP	3	102	8760	RT, LED 17W 4P 2G11 3L TP	3	51	8760	2,681	1,340	1,340
90	2 : Deputy/Visitation	1st	SEARCH	2X4 Prism Rec 3L 32W T8 TP	1	89	8760	RT, 4' 10.5W DE LED 3L TP	1	32	8760	780	276	504
91	2 : Deputy/Visitation	1st	CELLS 1-5	2x2 Prism Rec 3L FT40 TP	5	102	2912	RT, LED 17W 4P 2G11 3L TP	5	51	2912	1,485	743	743
92	2 : Deputy/Visitation	1st	RESTROOM	2X4 Prism Rec 3L 32W T8 TP	1	89	1456	RT, 4' 10.5W DE LED 3L TP	1	32	1456	130	46	84
93	2 : Deputy/Visitation	1st	RESTROOM	2' Wall Bracket 4L T8 TP	1	61	1456	RT, 2' 7W DE LED 4L TP	1	28	1456	89	41	48
94	2 : Deputy/Visitation	1st	OPEN VISITATION	2X4 Prism Rec 3L 32W T8 TP	37	89	4108	RT, 4' 10.5W DE LED 3L TP	37	32	4108	13,528	4,788	8,740
95	2 : Deputy/Visitation	1st	RESTROOM 1+2	2x2 Prism Rec 3L FT40 TP	1	102	1456	RT, LED 17W 4P 2G11 3L TP	1	51	1456	149	74	74
96	2 : Deputy/Visitation	1st	RESTROOM 1+2	2' Wall Bracket 4L T8 TP	1	61	1456	RT, 2' 7W DE LED 4L TP	1	28	1456	89	41	48
97	2 : Deputy/Visitation	1st	FAMILY ROOM	2X4 Prism Rec 3L 32W T8 TP	2	89	4108	RT, 4' 10.5W DE LED 3L TP	2	32	4108	731	259	472
98	2 : Deputy/Visitation	1st	FAMILY ROOM	Exit Sign LED TP	2	3	8760	No Action - Existing Efficient/LED Fixture	2	3	8760	53	53	0
99	2 : Deputy/Visitation	1st	HALLWAY	2x2 Prism Rec 3L FT40 TP	9	102	8760	RT, LED 17W 4P 2G11 3L TP	9	51	8760	8,042	4,021	4,021
100	2 : Deputy/Visitation	1st	MENS RESTROOM	1x4 Prism Rec 2L 32W T8	3	59	1092	RT, 4' 10.5W DE LED 2L	3	21	1092	193	69	124
101	2 : Deputy/Visitation	1st	MENS RESTROOM	4' Vanity LED 18W T8 ULA 2L	2	42	1092	RT, 4' 10.5W DE LED 2L	2	21	1092	92	46	46
102	2 : Deputy/Visitation	1st	WOMENS RESTROOM	1x4 Prism Rec 2L 32W T8	3	59	1092	RT, 4' 10.5W DE LED 2L	3	21	1092	193	69	124
103	2 : Deputy/Visitation	1st	WOMENS RESTROOM	4' Vanity LED 18W T8 ULA 2L	2	42	1092	RT, 4' 10.5W DE LED 2L	2	21	1092	92	46	46
104	2 : Deputy/Visitation	1st	HALLWAY	Exit Sign CFL 9W 2L	1	20	8760	Exit Sign LED BB	1	3	8760	175	26	149
105	2 : Deputy/Visitation	1st	CONFERENCE ROOM	2X4 Prism Rec 4L 32W T8	6	112	1560	RT, 4' 10.5W DE LED 2L, 2x4 Refl Kit	6	21	1560	1,048	197	852
106	2 : Deputy/Visitation	1st	OPEN OFFICE	2x2 Prism Rec 2L 32W U6 T8	7	59	3640	RT, 2' 7W DE LED 2L, 2x2 Refl Kit	7	14	3640	1,503	357	1,147
107	2 : Deputy/Visitation	1st	OFFICES 1-6	2X4 Prism Rec 4L 32W T8	15	112	3640	RT, 4' 10.5W DE LED 2L, 2x4 Refl Kit	15	21	3640	6,115	1,147	4,969
108	2 : Deputy/Visitation	1st	STAIRS	2x2 Par Rec 2L 32W U6 T8	4	59	8760	RT, 2' 7W DE LED 3L, 2x2 Refl Kit	4	21	8760	2,067	736	1,332
109	2 : Deputy/Visitation	1st	RESTROOM	2x2 Prism Rec 3L FT40 TP	1	102	1456	RT, LED 17W 4P 2G11 3L TP	1	51	1456	149	74	74
110	5 : Parole	1st	HALLWAY	2X4 Prism Rec 2L 32W T8	2	59	8760	RT, 4' 10.5W DE LED 2L	2	21	8760	1,034	368	666
111	5 : Parole	1st	OFFICE	2X4 Prism Rec 2L 32W T8	4	59	3640	RT, 4' 10.5W DE LED 2L	4	21	3640	859	306	553
112	5 : Parole	1st	OFFICE	2X4 Prism Rec 2L 32W T8	2	59	3640	RT, 4' 10.5W DE LED 2L	2	21	3640	430	153	277
113	5 : Parole	1st	OFFICE	Exit Sign LED	1	3	8760	No Action - Existing Efficient/LED Fixture	1	3	8760	26	26	0
114	5 : Parole	1st	OPEN OFFICE	2X4 Prism Rec 4L 32W T8	4	112	3640	RT, 4' 10.5W DE LED 2L, 2x4 Refl Kit	4	21	3640	1,631	306	1,325
115	5 : Parole	1st	OPEN OFFICE	1x4 Prism Rec 2L 32W T8	1	59	3640	RT, 4' 10.5W DE LED 2L	1	21	3640	215	76	138
116	5 : Parole	1st	OFFICE 1-3	2X4 Prism Rec 4L 32W T8	6	112	3640	RT, 4' 10.5W DE LED 2L, 2x4 Refl Kit	6	21	3640	2,446	459	1,987
117	5 : Parole	1st	MENS RESTROOM	12" Rec Sq. LED 14W A	1	14	1456	LED 9W A19 Replacement	1	10	1456	20	14	7
118	5 : Parole	1st	MENS RESTROOM	2' Vanity 2L 17W T8	1	33	1456	RT, 2' 7W DE LED 2L	1	14	1456	48	20	28
119	5 : Parole	1st	OFFICE	2x2 Par Rec 2L 32W U6 T8	1	59	3640	RT, 2' 7W DE LED 3L, 2x2 Refl Kit	1	21	3640	215	76	138
120	5 : Parole	1st	OFFICE	2x2 Par Rec 2L 32W U6 T8	1	59	3640	RT, 2' 7W DE LED 3L, 2x2 Refl Kit	1	21	3640	215	76	138
121	5 : Parole	1st	WOMENS RESTROOM	12" Rec Sq. LED 14W A	1	14	1456	LED 9W A19 Replacement	1	10	1456	20	14	7
122	5 : Parole	1st	WOMENS RESTROOM	2' Vanity 2L 17W T8	1	33	1456	RT, 2' 7W DE LED 2L	1	14	1456	48	20	28
123	5 : Parole	1st	OFFICE	2X4 Prism Rec 4L 32W T8	3	112	3640	RT, 4' 10.5W DE LED 2L, 2x4 Refl Kit	3	21	3640	1,223	229	994
124	5 : Parole	1st	HALLWAY	2x2 Par Rec 2L 32W U6 T8	1	59	8760	RT, 2' 7W DE LED 3L, 2x2 Refl Kit	1	21	8760	517	184	333
125	5 : Parole	1st	OFFICE	2X4 Prism Rec 4L 32W T8	2	112	3640	RT, 4' 10.5W DE LED 2L, 2x4 Refl Kit	2	21	3640	815	153	662
126	Site Lighting	Exterior	PARKING LOT	Shoebox MH 400W	10	458	4380	Area LED 16.5 kLm PC	10	133	4380	20,060	5,825	14,235
127	Site Lighting	Exterior	PARKING LOT	Shoebox LED 80W Corn Cob	10	80	4380	Area LED 16.5 kLm PC	10	133	4380	3,504	5,825	-2,321
128	Site Lighting	Exterior	PARKING LOT	Shoebox MH 400W	4	458	4380	Area LED 16.5 kLm PC	4	133	4380	8,024	2,330	5,694
129	Site Lighting	Exterior	PARKING LOT	Shoebox LED 80W Corn Cob	4	80	4380	Area LED 16.5 kLm PC	4	133	4380	1,402	2,330	-929
130	Site Lighting	Exterior	INTERIOR YARD	Shoebox HPS 150W	5	188	4380	Area LED 7 kLm PC	5	51	4380	4,117	1,117	3,000
131	Site Lighting	Exterior	INTERIOR YARD	Shoebox LED 45W Corn Cob	46	45	4380	Area LED 7 kLm PC	46	51	4380	9,067	10,275	-1,209
132	Site Lighting	Exterior	INTERIOR YARD	Flood MH 400W	4	458	4380	Flood LED 16.5 kLm SF PC	4	133	4380	8,024	2,330	5,694
133	Site Lighting	Exterior	STP SEDIMENT POND	Shoebox MH 400W	2	458	4380	Area LED 16.5 kLm PC	2	133	4380	4,012	1,165	2,847
134	1 : Admin	Exterior	ADMIN	Wall Pack HPS 70W	43	95	4380	Wall Pack LED CO WPX 2.9 kLm PC	43	24	4380	17,892	4,520	13,372
135	1 : Admin	Exterior	CANOPY	7" Rec Can CFL 26W 4P 2L	4	50	4380	RC LED Retrofit Kit 2000 Lm 8" Adj. 2000 Lm	4	17	4380	876	298	578
136	Site Lighting	Exterior	PERIMETER FENCE LINE	Sportslighter MH 1000W	72	1080	4380	Flood LED 52 kLm YK	72	388	4380	340,589	122,360	218,229
137	Site Lighting	Exterior	PERIMETER FENCE LINE	Flood MH 1000W	2	1080	4380	Flood LED 52 kLm SF PC	2	388	4380	9,461	3,399	6,062
138	3 : Medical	1st	VESTIBULE	2X4 Prism Rec 4L 32W T8	1	112	8760	RT, 4' 10.5W DE LED 2L, 2x4 Refl Kit	1	21	8760	981	184	797
139	3 : Medical	1st	VESTIBULE	2x2 Prism Rec 2L 32W U6 T8	5	59	8760	RT, 2' 7W DE LED 2L, 2x2 Refl Kit	5	14	8760	2,584	613	1,971
140	3 : Medical	1st	VESTIBULE	Exit Sign Combo LED	1	3	8760	No Action - Existing Efficient/LED Fixture	1	3	8760	26	26	0
141	3 : Medical	1st	HALLWAY	2x2 Prism Rec 3L FT40 TP	6	102	8760	RT, LED 17W 4P 2G11 3L TP	6	51	8760	5,361	2,681	2,681
142	3 : Medical	1st	HALLWAY	2X4 Prism Rec 3L 32W T8 TP	1	89	8760	RT, 4' 10.5W DE LED 3L TP	1	32	8760	780	276	504
143	3 : Medical	1st	OFFICE	2x2 Prism Rec 3L FT40 TP	2	102	3640	RT, LED 17W 4P 2G11 3L TP	2	51	3640	743	371	371
144	3 : Medical	1st	EYE EXAM	2x2 Prism Rec 3L FT40 TP	6	102	3640	RT, LED 17W 4P 2G11 3L TP	6	51	3640	2,228	1,114	1,114
145	3 : Medical	1st	OFFICE	2X4 Prism Rec LED 18W T8 ULA 2L	2	42	3640	RT, 4' 10.5W DE LED 2L	2	21	3640	306	153	153
146	3 : Medical	1st	OFFICE	2x2 Par Rec 2L 32W U6 T8	1	59	3640	RT, 2' 7W DE LED 3L, 2x2 Refl Kit	1	21	3640	215	76	138
147	3 : Medical	1st	OFFICE	2X4 Prism Rec 2L 32W T8	2	59	3640	RT, 4' 10.5W DE LED 2L	2	21	3640	430	153	277
148	3 : Medical	1st	OFFICE	2X4 Prism Rec 3L 32W T8 TP	1	89	3640	RT, 4' 10.5W DE LED 3L TP	1	32	3640	324	115	209
149	3 : Medical	1st	RECORD	2X4 Prism Rec 3L 32W T8 TP	4	89	1000	RT, 4' 10.5W DE LED 3L TP	4	32	1000	356	126	230
150	3 : Medical	1st	EXAM	2X4 Prism Rec 3L 32W T8 TP	2	89	3640	RT, 4' 10.5W DE LED 3L TP	2	32	3640	648	229	419
151	3 : Medical	1st	RECORD	2x2 Prism Rec 3L FT40 TP	2	102	1000	RT, LED 17W 4P 2G11 3L TP	2	51	1000	204	102	102
152	3 : Medical	1st	OFFICE	2X4 Prism Rec 3L 32W T8 TP	2	89	3640	RT, 4' 10.5W DE LED 3L TP	2	32	3640	648	229	419
153	3 : Medical	1st	OFFICE	2X4 Prism Rec 3L 32W T8 TP	1	89	3640	RT, 4' 10.5W DE LED 3L TP	1	32	3640	324	115	209
154	3 : Medical	1st	EXAM	2X4 Prism Rec 3L 32W T8	2	89	3640	RT, 4' 10.5W DE LED 3L	2	32	3640	648	229	419
155	3 : Medical	1st	STORAGE	2X4 Prism Rec 3L 32W T8 TP	1	89	1000	RT, 4' 10.5W DE LED 3L TP	1	32	1000	89	32	58
156	3 : Medical	1st	OFFICE	2X4 Prism Rec 3L 32W T8 TP	1	89	3640	RT, 4' 10.5W DE LED 3L TP	1	32	3640	324	115	209
157	3 : Medical	1st	DENTIST	2x2 Flat Panel Rec LED 30W	2	30	3640	No Action - Existing Efficient/LED Fixture	2	30	3640	218	218	0
158	3 : Medical	1st	EXAM	1x4 Prism Rec 2L 32W T8	8	59	3640	RT, 4' 10.5W DE LED 2L	8	21	3640	1,718	612	1,107
159	3 : Medical	1st	JANITOR	6" Rec Can LED 14W A	1	14	1000	LED 9W A19 Replacement	1	10	1000	14	10	5
160	3 : Medical	1st	HALLWAY	4' Undercabinet BP 2L 32W T8	3	59	8760	RT, 4' 10.5W DE LED 2L	3	21	8760	1,551	552	999
161	3 : Medical	1st	LAB	2X4 Prism Rec 3L 32W T8	2	89	3640	RT, 4' 10.5W DE LED 3L	2	32	3640	648	229	419
162	3 : Medical	1st	INMATE RESTROOM	2' Vanity 2L 17W T8	1	33	1456	RT, 2' 7W DE LED 2L	1	14	1456	48	20	28
163	3 : Medical	1st	INMATE RESTROOM	Fan LED 14W A	1	14	1456	LED 13W A19 Replacement	1	13	1456	20	19	1
164	3 : Medical	1st	STAFF RESTROOM	2' Vanity 2L 17W T8	1	33	1456	RT, 2' 7W DE LED 2L	1	14	1456	48	20	28
165	3 : Medical	1st	STAFF RESTROOM	Fan LED 14W A	1	14	1456	LED 13W A19 Replacement	1	13	1456	20	19	1
166	3 : Medical	1st	HALLWAY	2x2 Prism Rec 2L 32W U6 T8	6	59	8760	RT, 2' 7W DE LED 2L, 2x2 Refl Kit	6	14	8760	3,101	736	2,365
167	3 : Medical	1st	HALLWAY	Exit Sign LED TP	1	3	8760	No Action - Existing Efficient/LED Fixture	1	3	8760	26	26	0

168	3 : Medical	1st	KITCHEN	2X4 Prism Rec LED 18W T8 ULA 3L	2	63	1560	RT, 4' 10.5W DE LED 3L	2	32	1560	197	98	98
169	3 : Medical	1st	KITCHEN	2' Undercabinet 1L 17W T8	1	20	1560	RT, 2' 7W DE LED 1L	1	7	1560	31	11	20
170	3 : Medical	1st	EXAM 1001	4' Wrap LED 25W	2	25	3640	No Action - Existing Efficient/LED Fixture	2	25	3640	182	182	0
171	3 : Medical	1st	EXAM 1001	4' Vanity BP 2L 32W T8	2	59	3640	RT, 4' 10.5W DE LED 2L	2	21	3640	430	153	277
172	3 : Medical	1st	HALLWAY	2x2 Prism Rec 3L FT40 TP	3	102	8760	RT, LED 17W 4P 2G11 3L TP	3	51	8760	2,681	1,340	1,340
173	3 : Medical	1st	STORAGE	2' Wrap 2L T8	2	33	1000	RT, 2' 7W DE LED 2L	2	14	1000	66	28	38
174	3 : Medical	1st	RESTROOM	4' Vandal Proof BP 3L 32W T8	1	89	1456	RT, 4' 10.5W DE LED 3L TP	1	32	1456	130	46	84
175	3 : Medical	1st	RESTROOM	2' Vanity 2L 17W T8	1	33	1456	RT, 2' 7W DE LED 2L	1	14	1456	48	20	28
176	3 : Medical	1st	RESTROOM	6" Rec Can LED 14W A	1	14	1456	LED 9W A19 Replacement	1	10	1456	20	14	7
177	3 : Medical	1st	RESTROOM	Fan LED 14W A	1	14	1456	LED 9W A19 Replacement	1	10	1456	20	14	7
178	3 : Medical	1st	STORAGE	4' Wall Bracket BP 4L 32W T8 TP	3	112	1000	RT, 4' 10.5W DE LED 4L TP	3	42	1000	336	126	210
179	3 : Medical	1st	INFIRMARY	4' Wall Bracket BP 4L 32W T8 TP	6	112	3640	RT, 4' 10.5W DE LED 4L TP	6	42	3640	2,446	917	1,529
180	3 : Medical	1st	INFIRMARY	2x2 Prism Rec 3L FT40 TP	14	102	3640	RT, LED 17W 4P 2G11 3L TP	14	51	3640	5,198	2,599	2,599
181	3 : Medical	1st	HALLWAY	2x2 Prism Rec 2L 32W U6 T8	2	59	8760	RT, 2' 7W DE LED 2L, 2x2 Refl Kit	2	14	8760	1,034	245	788
182	3 : Medical	1st	INFIRMARY 1002	4' Wrap BP 2L 32W T8	2	59	3640	RT, 4' 10.5W DE LED 2L	2	21	3640	430	153	277
183	3 : Medical	1st	INFIRMARY 1002	Jelly Jar LED 14W A	1	14	3640	LED 13W A19 Replacement	1	13	3640	51	47	4
184	3 : Medical	1st	INFIRMARY	4' Wrap BP 2L 32W T8	2	59	3640	RT, 4' 10.5W DE LED 2L	2	21	3640	430	153	277
185	3 : Medical	1st	INFIRMARY	Jelly Jar LED 14W A	1	14	3640	LED 13W A19 Replacement	1	13	3640	51	47	4
186	3 : Medical	1st	JANITOR	12" Rec Sq. LED 14W A	1	14	1000	LED 9W A19 Replacement	1	10	1000	14	10	5
187	3 : Medical	1st	HOLDING	2X4 Prism Rec 3L 32W T8 TP	2	89	2912	RT, 4' 10.5W DE LED 3L TP	2	32	2912	518	183	335
188	3 : Medical	1st	HOLDING	4' Wrap BP 2L 32W T8	4	59	2912	RT, 4' 10.5W DE LED 2L	4	21	2912	687	245	443
189	2 : Deputy/Visitation	1st	MECHANICAL	8' Industrial LED 18W T8 ULB 2L	2	36	520	RT, 4' 10.5W DE LED 2L	2	21	520	37	22	16
190	2 : Deputy/Visitation	Exterior	ATRIUM	Wall Pack LED 14W A	6	14	4380	Wall Pack LED FT TWX 1.6 kLm PC	6	11	4380	368	289	79
191	2 : Deputy/Visitation	Exterior	ATRIUM EMERGENCY	Wall Pack Inc 60W A	1	60	0	No Action - Emergency Use Only	1	60	0	0	0	0
192	2 : Deputy/Visitation	Exterior	ATRIUM	Wall Pack HPS 150W	1	188	4380	Wall Pack LED FT TWX 5 kLm PC	1	36	4380	823	158	666
193	2 : Deputy/Visitation	1st	MENS RESTROOM	4' Vanity LED 18W T8 ULB 2L	1	36	1456	RT, 4' 10.5W DE LED 2L	1	21	1456	52	31	22
194	2 : Deputy/Visitation	1st	MENS RESTROOM	1x4 Prism Rec LED 18W T8 ULA 2L	1	42	1456	RT, 4' 10.5W DE LED 2L	1	21	1456	61	31	31
195	2 : Deputy/Visitation	1st	WOMENS RESTROOM	4' Vanity LED 18W T8 ULB 2L	1	36	1456	RT, 4' 10.5W DE LED 2L	1	21	1456	52	31	22
196	2 : Deputy/Visitation	1st	WOMENS RESTROOM	1x4 Prism Rec LED 18W T8 ULA 2L	1	42	1456	RT, 4' 10.5W DE LED 2L	1	21	1456	61	31	31
197	2 : Deputy/Visitation	1st	OPEN OFFICE	2X4 Prism Rec 4L 32W T8	5	112	3640	RT, 4' 10.5W DE LED 4L	5	42	3640	2,038	764	1,274
198	2 : Deputy/Visitation	1st	DEPUTY OFFICE 1-7	2X4 Prism Rec 4L 32W T8	26	112	3640	RT, 4' 10.5W DE LED 2L, 2x4 Refl Kit	26	21	3640	10,600	1,987	8,612
199	2 : Deputy/Visitation	1st	HALLWAY	2x2 Prism Rec 2L 32W U6 T8	3	59	8760	RT, 2' 7W DE LED 2L, 2x2 Refl Kit	3	14	8760	1,551	368	1,183
200	2 : Deputy/Visitation	1st	IT	2X4 Prism Rec 4L 32W T8	1	112	520	RT, 4' 10.5W DE LED 2L, 2x4 Refl Kit	1	21	520	58	11	47
201	2 : Deputy/Visitation	1st	CLOSET	2X4 Prism Rec 4L 32W T8	1	112	1000	RT, 4' 10.5W DE LED 2L, 2x4 Refl Kit	1	21	1000	112	21	91
202	2 : Deputy/Visitation	1st	OFFICE	2X4 Prism Rec 4L 32W T8	2	112	3640	RT, 4' 10.5W DE LED 2L, 2x4 Refl Kit	2	21	3640	815	153	662
203	2 : Deputy/Visitation	1st	OFFICE 108	2X4 Prism Rec 4L 32W T8	2	112	3640	RT, 4' 10.5W DE LED 2L, 2x4 Refl Kit	2	21	3640	815	153	662
204	2 : Deputy/Visitation	1st	RESTROOM	2' Vanity 2L 17W T8	1	33	1456	RT, 2' 7W DE LED 2L	1	14	1456	48	20	28
205	2 : Deputy/Visitation	1st	RESTROOM	6" Rec Can LED 14W A	1	14	1456	LED 9W A19 Replacement	1	10	1456	20	14	7
206	2 : Deputy/Visitation	1st	L7 OFFICE	2X4 Prism Rec 4L 32W T8	2	112	3640	RT, 4' 10.5W DE LED 2L, 2x4 Refl Kit	2	21	3640	815	153	662
207	2 : Deputy/Visitation	1st	OFFICE	2X4 Prism Rec 4L 32W T8	2	112	3640	RT, 4' 10.5W DE LED 2L, 2x4 Refl Kit	2	21	3640	815	153	662
208	2 : Deputy/Visitation	1st	OFFICE	2X4 Prism Rec 4L 32W T8	4	112	3640	RT, 4' 10.5W DE LED 2L, 2x4 Refl Kit	4	21	3640	1,631	306	1,325
209	2 : Deputy/Visitation	1st	OFFICE	2X4 Prism Rec LED 18W T8 ULB 2L	2	36	3640	RT, 4' 10.5W DE LED 2L	2	21	3640	262	153	109
210	2 : Deputy/Visitation	1st	STORAGE	4' Wrap BP 2L 32W T8	4	59	1000	RT, 4' 10.5W DE LED 2L	4	21	1000	236	84	152
211	2 : Deputy/Visitation	1st	STORAGE	2x2 Prism Rec 2L 32W U6 T8	3	59	1000	RT, 2' 7W DE LED 2L, 2x2 Refl Kit	3	14	1000	177	42	135
212	2 : Deputy/Visitation	1st	STORAGE	2X4 Prism Rec 4L 32W T8	2	112	1000	RT, 4' 10.5W DE LED 2L, 2x4 Refl Kit	2	21	1000	224	42	182
213	2 : Deputy/Visitation	1st	STORAGE	2X4 Prism Rec 4L 32W T8	2	112	1000	RT, 4' 10.5W DE LED 2L, 2x4 Refl Kit	2	21	1000	224	42	182
214	2 : Deputy/Visitation	1st	OFFICE	2X4 Prism Rec 4L 32W T8	2	112	3640	RT, 4' 10.5W DE LED 2L, 2x4 Refl Kit	2	21	3640	815	153	662
215	4 : Dietary	1st	STAFF DINING	4' Wrap LED 18W T8 ULB 2L	1	36	5460	RT, 4' 10.5W DE LED 2L	1	21	5460	197	115	82
216	4 : Dietary	1st	STAFF DINING	6" Rec Can LED 14W A	18	14	5460	LED 13W A19 Replacement	18	13	5460	1,376	1,278	98
217	4 : Dietary	1st	STAFF DINING	8' Strip LED 18W T8 ULA 4L	5	84	5460	RT, 4' 10.5W DE LED 4L	5	42	5460	2,293	1,147	1,147
218	4 : Dietary	1st	STAFF DINING	Exit Sign LED TP	1	3	8760	No Action - Existing Efficient/LED Fixture	1	3	8760	26	26	0
219	4 : Dietary	1st	STAFF DINING	Exit Sign Combo LED TP	2	3	8760	No Action - Existing Efficient/LED Fixture	2	3	8760	53	53	0
220	4 : Dietary	1st	STAFF DINING	4' Strip LED 18W T8 ULA 2L	1	42	5460	RT, 4' 10.5W DE LED 2L	1	21	5460	229	115	115
221	4 : Dietary	1st	STAFF DINING	2X4 Prism Rec 3L 32W T8 TP	1	89	5460	RT, 4' 10.5W DE LED 3L TP	1	32	5460	486	172	314
222	4 : Dietary	1st	MECHANICAL	4' Wrap BP 2L 32W T8	4	59	520	RT, 4' 10.5W DE LED 2L	4	21	520	123	44	79
223	4 : Dietary	1st	MECHANICAL	Exit Sign LED TP	2	3	8760	No Action - Existing Efficient/LED Fixture	2	3	8760	53	53	0
224	4 : Dietary	1st	KITCHEN	Wall Pack Inc 60W A	1	60	5460	LED 9W A19 Replacement	1	10	5460	328	52	276
225	4 : Dietary	1st	FOOD PREP	2X4 Prism Rec 3L 32W T8 TP	16	89	5460	RT, 4' 10.5W DE LED 3L TP	16	32	5460	7,775	2,752	5,023
226	4 : Dietary	1st	HALLWAY	2X4 Prism Rec 3L 32W T8 TP	7	89	5460	RT, 4' 10.5W DE LED 3L TP	7	32	5460	3,402	1,204	2,198
227	4 : Dietary	1st	HALLWAY	2X4 Prism Rec 2L 32W T8 TP	7	59	5460	RT, 4' 10.5W DE LED 2L TP	7	21	5460	2,255	803	1,452
228	4 : Dietary	1st	STORAGE	2X4 Prism Rec LED 18W T8 ULA 2L TP	2	42	1000	RT, 4' 10.5W DE LED 2L TP	2	21	1000	84	42	42
229	4 : Dietary	1st	DRY STORAGE	2X4 Prism Rec LED 18W T8 ULA 2L TP	8	42	1000	RT, 4' 10.5W DE LED 2L TP	8	21	1000	336	168	168
230	4 : Dietary	1st	COOLER	Canopy LED 20W	30	20	1000	No Action - Existing Efficient/LED Fixture	30	20	1000	600	600	0
231	4 : Dietary	1st	OFFICE	2X4 Volumetric Rec 2L 32W T8	3	59	4095	RT, 4' 10.5W DE LED 2L	3	21	4095	725	258	467
232	4 : Dietary	1st	CLOSET	2X4 Volumetric Rec 2L 32W T8	1	59	1000	RT, 4' 10.5W DE LED 2L	1	21	1000	59	21	38
233	4 : Dietary	1st	MAIN KITCHEN	1x4 Prism Rec 3L 32W T8	29	89	5460	RT, 4' 10.5W DE LED 3L	29	32	5460	14,092	4,988	9,105
234	4 : Dietary	1st	MAIN KITCHEN	1x4 Prism Rec LED 18W T8 ULA 3L	2	63	5460	RT, 4' 10.5W DE LED 3L	2	32	5460	688	344	344
235	4 : Dietary	1st	MAIN KITCHEN	2X4 Prism Rec 4L 32W T8	5	112	5460	RT, 4' 10.5W DE LED 4L	5	42	5460	3,058	1,147	1,911
236	4 : Dietary	1st	STORAGE	1x4 Prism Rec LED 18W T8 ULA 2L	2	42	1000	RT, 4' 10.5W DE LED 2L	2	21	1000	84	42	42
237	4 : Dietary	1st	HOODS	Jelly Jar LED 14W A	10	14	5460	LED 9W A19 Replacement	10	10	5460	764	519	246
238	4 : Dietary	1st	OFFICE	2X4 Volumetric Rec 2L 32W T8	2	59	5460	RT, 4' 10.5W DE LED 2L	2	21	5460	644	229	415
239	4 : Dietary	1st	STORAGE	2X4 Prism Rec 2L 32W T8 TP	2	59	750	RT, 4' 10.5W DE LED 2L TP	2	21	750	89	32	57
240	4 : Dietary	1st	LARGE STORAGE	1x4 Prism Rec 3L 32W T8	20	89	1000	RT, 4' 10.5W DE LED 2L, 1x4 Refl Kit	20	21	1000	1,780	420	1,360
241	4 : Dietary	1st	LARGE STORAGE	Exit Sign Combo LED	1	3	8760	No Action - Existing Efficient/LED Fixture	1	3	8760	26	26	0
242	4 : Dietary	1st	STORAGE	1x4 Prism Rec 2L 32W T8 TP	1	59	1000	RT, 4' 10.5W DE LED 2L TP	1	21	1000	59	21	38
243	4 : Dietary	1st	STORAGE	2X4 Prism Rec 2L 32W T8 TP	6	59	1000	RT, 4' 10.5W DE LED 2L TP	6	21	1000	354	126	228
244	4 : Dietary	1st	HALLWAY	4' Wrap BP 2L 32W T8	4	59	5460	RT, 4' 10.5W DE LED 2L	4	21	5460	1,289	459	830
245	4 : Dietary	1st	HALLWAY	2X4 Prism Sur 2L 32W T8 TP	3	59	5460	RT, 4' 10.5W DE LED 2L TP	3	21	5460	966	344	622
246	4 : Dietary	1st	DINING	8' Direct/Indirect BP 4L 32W T8	23	112	5460	RT, 4' 10.5W DE LED 4L	23	42	5460	14,065	5,274	8,791
247	4 : Dietary	1st	DINING	8' Direct/Indirect LED 18W T8 ULB 4L	20	72	5460	RT, 4' 10.5W DE LED 4L	20	42	5460	7,862	4,586	3,276
248	4 : Dietary	1st	DINING	4' Wall Bracket BP 2L 32W T8	6	59	5460	RT, 4' 10.5W DE LED 2L	6	21	5460	1,933	688	1,245
249	4 : Dietary	1st	DINING	4' Wall Bracket LED 18W T8 ULB 2L	3	36	5460	RT, 4' 10.5W DE LED 2L	3	21	5460	590	344	246
250	4 : Dietary	1st	DINING	Exit Sign Combo LED	2	3	8760	No Action - Existing Efficient/LED Fixture	2	3	8760	53	53	0
251	4 : Dietary	1st	VESTIBULE	2X4 Prism Sur 2L 32W T8 TP	2	59	5460	RT, 4' 10.5W DE LED 2L TP	2	21	5460	644	229	415
252	4 : Dietary	1st	CAGE AREA	4' Wrap BP 2L 32W T8	2	59	5460	RT, 4' 10.5W DE LED 2L	2	21	5460	644	229	415

253	4 : Dietary	1st	CAGE AREA	8' Direct/Indirect BP 4L 32W T8	2	112	5460	RT, 4' 10.5W DE LED 4L	2	42	5460	1,223	459	764
254	4 : Dietary	Exterior	EXTERIOR	Wall Pack LED 20W	15	20	4380	No Action - Existing Efficient/LED Fixture	15	20	4380	1,314	1,314	0
255	R&D	1st	OPEN AREA	2X4 Prism Rec 2L 32W T8	13	59	3640	RT, 4' 10.5W DE LED 2L	13	21	3640	2,792	994	1,798
256	R&D	1st	HALLWAY	2X4 Prism Rec 2L 32W T8	3	59	8760	RT, 4' 10.5W DE LED 2L	3	21	8760	1,551	552	999
257	R&D	1st	ID STATION	2X4 Prism Rec LED 18W T8 ULB 2L	1	36	3640	RT, 4' 10.5W DE LED 2L	1	21	3640	131	76	55
258	R&D	1st	ID STATION	4' Corner Mount BP 3L 32W T8 TP	2	89	3640	RT, 4' 10.5W DE LED 3L TP	2	32	3640	648	229	419
259	R&D	1st	SHOWER 104+105	Drum CFL 13W 2P 3L	2	48	4368	RT, LED 5.5W 2P GX23 H 3L	2	17	4368	419	144	275
260	R&D	1st	JANITOR 103	4' Wrap BP 2L 32W T8	1	59	750	RT, 4' 10.5W DE LED 2L	1	21	750	44	16	29
261	R&D	1st	PROPERTY STORAGE 102	2X4 Prism Rec 2L 32W T8	7	59	1000	RT, 4' 10.5W DE LED 2L	7	21	1000	413	147	266
262	R&D	1st	PROPERTY STORAGE 102	2X4 Prism Rec LED 18W T8 ULB 2L	3	36	1000	RT, 4' 10.5W DE LED 2L	3	21	1000	108	63	45
263	R&D	1st	STORAGE 101	4' Corner Mount LED 18W T8 ULB 3L TP	1	54	1000	RT, 4' 10.5W DE LED 3L TP	1	32	1000	54	32	23
264	R&D	1st	HOLDING CELL 100	4' Corner Mount LED 18W T8 ULB 3L TP	2	54	2912	RT, 4' 10.5W DE LED 3L TP	2	32	2912	314	183	131
265	R&D	1st	VESTIBULE	2X4 Prism Rec 2L 32W T8	1	59	8760	RT, 4' 10.5W DE LED 2L	1	21	8760	517	184	333
266	R&D	1st	VESTIBULE	Exit Sign LED	1	3	8760	No Action - Existing Efficient/LED Fixture	1	3	8760	26	26	0
267	R&D	1st	RESTROOM	4' Wrap BP 2L 32W T8	1	59	1092	RT, 4' 10.5W DE LED 2L	1	21	1092	64	23	41
268	R&D	1st	PAROLE 110	4' Wrap BP 2L 32W T8	4	59	3640	RT, 4' 10.5W DE LED 2L	4	21	3640	859	306	553
269	R&D	1st	OFFICE	2X4 Par Rec 3L 32W T8	2	89	2730	RT, 4' 10.5W DE LED 3L	2	32	2730	486	172	314
270	R&D	1st	CELL 108	4' Corner Mount LED 18W T8 ULB 3L TP	1	54	2912	RT, 4' 10.5W DE LED 3L TP	1	32	2912	157	92	66
271	R&D	1st	CELL 106	4' Corner Mount LED 18W T8 ULB 3L TP	1	54	2912	RT, 4' 10.5W DE LED 3L TP	1	32	2912	157	92	66
272	R&D	1st	HALLWAY	4' Wrap BP 2L 32W T8	1	59	8760	RT, 4' 10.5W DE LED 2L	1	21	8760	517	184	333
273	R&D	1st	HALLWAY	2X4 Prism Sur 2L 32W T8 TP	3	59	8760	RT, 4' 10.5W DE LED 2L TP	3	21	8760	1,551	552	999
274	R&D	1st	HALLWAY	Exit Sign Combo LED	1	3	8760	No Action - Existing Efficient/LED Fixture	1	3	8760	26	26	0
275	R&D	1st	STAIRS TO MAINTENANCE	4' Corner Mount BP 2L 32W T8 TP	1	59	8760	RT, 4' 10.5W DE LED 2L TP	1	21	8760	517	184	333
276	R&D	1st	STAIRS TO MAINTENANCE	4' Corner Mount BP 2L 32W T8 TP	1	59	8760	RT, 4' 10.5W DE LED 2L TP	1	21	8760	517	184	333
277	R&D	1st	STAIRS TO MAINTENANCE	4' Corner Mount BP 3L 32W T8 TP	1	89	8760	RT, 4' 10.5W DE LED 3L TP	1	32	8760	780	276	504
278	R&D	1st	STAIRS TO MAINTENANCE	2x2 Prism Sur 2L 32W U6 T8 TP	3	59	8760	RT, 4' 18W U SE LED 2L TP	3	36	8760	1,551	946	604
279	R&D	Exterior	EXTERIOR	Wall Pack HPS 400W	1	465	4380	Wall Pack LED FT TWX 10 kLm PC	1	71	4380	2,037	311	1,726
280	R&D	Exterior	EXTERIOR	Wall Pack HPS 70W	3	95	4380	Wall Pack LED FT TWX 3.2 kLm PC	3	22	4380	1,248	289	959
281	R&D	Lower Level	RESTROOM	4' Vaportight BP 2L 32W T8	2	59	1456	RT, 4' 10.5W DE LED 2L	2	21	1456	172	61	111
282	R&D	Lower Level	RESTROOM	4' Undercabinet BP 1L 32W T8	1	31	1456	RT, 4' 10.5W DE LED 1L	1	11	1456	45	15	30
283	R&D	Lower Level	STORAGE	Jelly Jar CFL 26W 4P	1	27	1000	RT, LED 8W 2P G24D/Q Omni	1	8	1000	27	8	19
284	R&D	Lower Level	STORAGE	Jelly Jar LED 14W A	2	14	1000	LED 9W A19 Replacement	2	10	1000	28	19	9
285	R&D	Lower Level	MECHANICAL	4' Strip BP 2L 32W T8	1	59	520	RT, 4' 10.5W DE LED 2L	1	21	520	31	11	20
286	R&D	Lower Level	MECHANICAL	8' Strip BP 4L 32W T8	4	112	520	RT, 4' 10.5W DE LED 4L	4	42	520	233	87	146
287	R&D	Lower Level	MECHANICAL	Exit Sign LED TP	1	3	8760	No Action - Existing Efficient/LED Fixture	1	3	8760	26	26	0
288	M : Maintenance	Exterior	EXTERIOR	Flood MH 250W	2	295	4380	Flood LED 10 kLm SF PC	2	72	4380	2,584	631	1,953
289	M : Maintenance	Exterior	EXTERIOR	Wall Pack MH 100W	2	128	4380	Wall Pack LED CO WPX 6 kLm PC	2	47	4380	1,121	412	710
290	M : Maintenance	Exterior	EXTERIOR	Canopy HPS 100W	1	138	4380	Wall Pack LED FT TWX 3.2 kLm PC	1	22	4380	604	96	508
291	M : Maintenance	Lower Level	MAINTENANCE OFFICE	2X4 Prism Rec LED 18W T8 ULA 4L	7	84	3094	RT, 4' 10.5W DE LED 2L, 2x4 Refl Kit	7	21	3094	1,819	455	1,364
292	M : Maintenance	Lower Level	STORAGE	4' Strip BP 2L 32W T8	1	59	1000	RT, 4' 10.5W DE LED 2L	1	21	1000	59	21	38
293	M : Maintenance	Lower Level	STORAGE	4' Wrap BP 2L 32W T8	1	59	1000	RT, 4' 10.5W DE LED 2L	1	21	1000	59	21	38
294	M : Maintenance	Lower Level	HALLWAY	2X4 Prism Rec LED 18W T8 ULA 2L	4	42	8760	RT, 4' 10.5W DE LED 2L	4	21	8760	1,472	736	736
295	M : Maintenance	Lower Level	ELECTRICAL OFFICE	2X4 Prism Rec LED 18W T8 ULB 4L	1	72	3640	RT, 4' 10.5W DE LED 2L, 2x4 Refl Kit	1	21	3640	262	76	186
296	M : Maintenance	Lower Level	ELECTRICAL OFFICE	2X4 Prism Rec 4L 32W T8	1	112	3640	RT, 4' 10.5W DE LED 2L, 2x4 Refl Kit	1	21	3640	408	76	331
297	M : Maintenance	Lower Level	ELECTRICAL OFFICE	2X4 Prism Rec LED 18W T8 ULC 4L	1	80	3640	RT, 4' 10.5W DE LED 2L, 2x4 Refl Kit	1	21	3640	291	76	215
298	M : Maintenance	Lower Level	ELECTRICAL OFFICE	2X4 Prism Rec LED 18W T8 ULA 4L	1	84	3640	RT, 4' 10.5W DE LED 2L, 2x4 Refl Kit	1	21	3640	306	76	229
299	M : Maintenance	Lower Level	ELECTRICAL OFFICE	4' Wrap LED 18W T8 ULB 2L	1	36	3640	RT, 4' 10.5W DE LED 2L	1	21	3640	131	76	55
300	M : Maintenance	Lower Level	CAGE AREA	4' Wrap LED 18W T8 ULB 2L	2	36	3640	RT, 4' 10.5W DE LED 2L	2	21	3640	262	153	109
301	M : Maintenance	Lower Level	CAGE AREA	4' Industrial LED 18W T8 ULB 2L	2	36	3640	RT, 4' 10.5W DE LED 2L	2	21	3640	262	153	109
302	M : Maintenance	Lower Level	OFFICE	2x2 Par Rec 2L 32W U6 T8	1	59	3640	RT, 2' 7W DE LED 3L, 2x2 Refl Kit	1	21	3640	215	76	138
303	M : Maintenance	Lower Level	OFFICE	4' Industrial BP 2L 32W T8	3	59	3640	RT, 4' 10.5W DE LED 2L	3	21	3640	644	229	415
304	M : Maintenance	Lower Level	CAGE AREA	2' Strip 1L T8	1	20	1000	RT, 2' 7W DE LED 1L	1	7	1000	20	7	13
305	M : Maintenance	Lower Level	HALLWAY	8' Strip BP 4L 32W T8	13	112	8760	RT, 4' 10.5W DE LED 4L	13	42	8760	12,755	4,783	7,972
306	M : Maintenance	Lower Level	PAINT OFFICE	4' Wrap LED 18W T8 ULB 2L	1	36	3640	RT, 4' 10.5W DE LED 2L	1	21	3640	131	76	55
307	M : Maintenance	Lower Level	CAGE AREA	2' Undercabinet 1L 17W T8	1	20	1000	RT, 2' 7W DE LED 1L	1	7	1000	20	7	13
308	M : Maintenance	Lower Level	RESTROOM	2' Wrap 2L T8	1	33	1456	RT, 2' 7W DE LED 2L	1	14	1456	48	20	28
309	M : Maintenance	Lower Level	RESTROOM	2' Wrap 2L T8	1	33	1456	RT, 2' 7W DE LED 2L	1	14	1456	48	20	28
310	M : Maintenance	Lower Level	HALLWAY	4' Wrap LED 18W T8 ULA 2L	1	42	8760	RT, 4' 10.5W DE LED 2L	1	21	8760	368	184	184
311	M : Maintenance	Lower Level	OFFICE	4' Wrap LED 18W T8 ULA 2L	2	42	3640	RT, 4' 10.5W DE LED 2L	2	21	3640	306	153	153
312	M : Maintenance	Lower Level	OFFICE	8' Strip BP 4L 32W T8	8	112	3640	RT, 4' 10.5W DE LED 4L	8	42	3640	3,261	1,223	2,038
313	M : Maintenance	Lower Level	OFFICE	8' Strip SP 2L T8	2	94	3640	RT, 4' 10.5W DE LED 4L, 8' BC Kit	2	42	3640	684	306	379
314	M : Maintenance	Lower Level	MECHANICAL	4' Strip LED 18W T8 ULA 4L	4	84	520	RT, 4' 10.5W DE LED 4L	4	42	520	175	87	87
315	M : Maintenance	Lower Level	TOOL SHOP	4' Strip LED 18W T8 ULB 2L	8	36	3640	RT, 4' 10.5W DE LED 2L	8	21	3640	1,048	612	437
316	M : Maintenance	Lower Level	TOOL SHOP	4' Wrap LED 18W T8 ULB 2L	2	36	3640	RT, 4' 10.5W DE LED 2L	2	21	3640	262	153	109
317	M : Maintenance	Lower Level	TOOL SHOP	Exit Sign Combo LED	1	3	8760	No Action - Existing Efficient/LED Fixture	1	3	8760	26	26	0
318	M : Maintenance	Lower Level	TOOL SHOP	4' Wrap BP 2L 32W T8	1	59	3640	RT, 4' 10.5W DE LED 2L	1	21	3640	215	76	138
319	M : Maintenance	Lower Level	RESTROOM	4' Industrial LED 18W T8 ULB 2L	1	36	1456	RT, 4' 10.5W DE LED 2L	1	21	1456	52	31	22
320	M : Maintenance	Lower Level	STORAGE	8' Wrap LED 18W T8 ULB 4L	2	72	1000	RT, 4' 10.5W DE LED 4L	2	42	1000	144	84	60
321	M : Maintenance	Lower Level	STORAGE	4' Wrap LED 18W T8 ULB 2L	2	36	1000	RT, 4' 10.5W DE LED 2L	2	21	1000	72	42	30
322	M : Maintenance	Lower Level	STORAGE	8' Strip LED 18W T8 ULB 4L	1	72	1000	RT, 4' 10.5W DE LED 4L	1	42	1000	72	42	30
323	M : Maintenance	Lower Level	OFFICE	4' Wrap LED 18W T8 ULA 2L	10	42	3640	RT, 4' 10.5W DE LED 2L	10	21	3640	1,529	764	764
324	M : Maintenance	Lower Level	OFFICE	Exit Sign Combo LED	1	3	8760	No Action - Existing Efficient/LED Fixture	1	3	8760	26	26	0
325	M : Maintenance	Lower Level	SHOP	8' Industrial LED 18W T8 ULA 4L	6	84	3640	RT, 4' 10.5W DE LED 4L	6	42	3640	1,835	917	917
326	M : Maintenance	Lower Level	SHOP	4' Industrial LED 18W T8 ULA 2L	2	42	3640	RT, 4' 10.5W DE LED 2L	2	21	3640	306	153	153
327	M : Maintenance	Lower Level	SHOP	4' Wrap LED 18W T8 ULA 2L	2	42	3640	RT, 4' 10.5W DE LED 2L	2	21	3640	306	153	153
328	M : Maintenance	Lower Level	SHOP	Jelly Jar LED 14W A	1	14	3640	LED 13W A19 Replacement	1	13	3640	51	47	4
329	M : Maintenance	Lower Level	SHOP	Exit Sign Combo LED	1	3	8760	No Action - Existing Efficient/LED Fixture	1	3	8760	26	26	0
330	M : Maintenance	Lower Level	MAINTENANCE REPAIR OFFICE	2X4 Prism Rec 4L 32W T8	3	112	3640	RT, 4' 10.5W DE LED 2L, 2x4 Refl Kit	3	21	3640	1,223	229	994
331	M : Maintenance	Lower Level	MAINTENANCE REPAIR OFFICE	2X4 Prism Rec 4L 32W T8	2	112	3640	RT, 4' 10.5W DE LED 2L, 2x4 Refl Kit	2	21	3640	815	153	662
332	M : Maintenance	Lower Level	WELDING SHOP	8' Industrial LED 18W T8 ULA 4L	6	84	3640	RT, 4' 10.5W DE LED 4L	6	42	3640	1,835	917	917
333	M : Maintenance	Lower Level	WELDING SHOP	4' Industrial LED 18W T8 ULA 2L	1	42	3640	RT, 4' 10.5W DE LED 2L	1	21	3640	153	76	76
334	M : Maintenance	Lower Level	CAGE AREA	4' Wrap LED 18W T8 ULA 2L	3	42	3640	RT, 4' 10.5W DE LED 2L	3	21	3640	459	229	229
335	M : Maintenance	Lower Level	CAGE AREA	High Bay LED 70W	1	70	3640	No Action - Existing Efficient/LED Fixture	1	70	3640	255	255	0
336	M : Maintenance	Lower Level	CAGE AREA	Exit Sign Combo LED	1	3	8760	No Action - Existing Efficient/LED Fixture	1	3	8760	26	26	0
337	M : Maintenance	Lower Level	RESTROOM	4' Wrap LED 18W T8 ULA 1L	1	21	1456	RT, 4' 10.5W DE LED 1L	1	11	1456	31	15	15

338	28 : Program Services	1st	VESTIBULE	4' Wrap BP 2L 32W T8	1	59	8760	RT, 4' 10.5W DE LED 2L	1	21	8760	517	184	333
339	28 : Program Services	1st	HALLWAY	4' Wrap BP 2L 32W T8	5	59	8760	RT, 4' 10.5W DE LED 2L	5	21	8760	2,584	920	1,664
340	28 : Program Services	1st	HALLWAY	4' Wrap LED 18W T8 ULA 2L	2	42	8760	RT, 4' 10.5W DE LED 2L	2	21	8760	736	368	368
341	28 : Program Services	1st	HALLWAY	Exit Sign LED	2	3	8760	No Action - Existing Efficient/LED Fixture	2	3	8760	53	53	0
342	28 : Program Services	1st	JANITOR	4' Wrap BP 2L 32W T8	1	59	1000	RT, 4' 10.5W DE LED 2L	1	21	1000	59	21	38
343	28 : Program Services	1st	CAGE AREA	4' Wrap LED 18W T8 ULA 2L	1	42	1000	RT, 4' 10.5W DE LED 2L	1	21	1000	42	21	21
344	28 : Program Services	1st	RESTROOM 142	Globe LED 14W A	3	14	1456	LED 9W A19 Replacement	3	10	1456	61	41	20
345	28 : Program Services	1st	OFFICE	4' Wrap BP 2L 32W T8	6	59	3640	RT, 4' 10.5W DE LED 2L	6	21	3640	1,289	459	830
346	28 : Program Services	1st	OFFICE 2	4' Wrap BP 2L 32W T8	3	59	3640	RT, 4' 10.5W DE LED 2L	3	21	3640	644	229	415
347	28 : Program Services	1st	CLASSROOM 3	4' Wrap BP 2L 32W T8	6	59	2600	RT, 4' 10.5W DE LED 2L	6	21	2600	920	328	593
348	28 : Program Services	1st	CLASSROOM 4	4' Wrap BP 2L 32W T8	6	59	2600	RT, 4' 10.5W DE LED 2L	6	21	2600	920	328	593
349	28 : Program Services	1st	CLASSROOM 5	4' Wrap BP 2L 32W T8	6	59	2600	RT, 4' 10.5W DE LED 2L	6	21	2600	920	328	593
350	28 : Program Services	1st	CLASSROOM 6	4' Wrap BP 2L 32W T8	6	59	2600	RT, 4' 10.5W DE LED 2L	6	21	2600	920	328	593
351	28 : Program Services	1st	CLASSROOM 7	4' Wrap LED 18W T8 ULA 2L	3	42	2600	RT, 4' 10.5W DE LED 2L	3	21	2600	328	164	164
352	28 : Program Services	1st	OFFICE 8	4' Wrap LED 18W T8 ULA 2L	3	42	3640	RT, 4' 10.5W DE LED 2L	3	21	3640	459	229	229
353	28 : Program Services	1st	OFFICE 9	4' Wrap LED 18W T8 ULA 2L	3	42	3640	RT, 4' 10.5W DE LED 2L	3	21	3640	459	229	229
354	28 : Program Services	1st	HALLWAY	Emergency Fixture	2	0	0	No Action - Emergency Use Only	2	0	0	0	0	0
355	28 : Program Services	1st	HALLWAY	Exit Sign LED	1	3	8760	No Action - Existing Efficient/LED Fixture	1	3	8760	26	26	0
356	28 : Program Services	Exterior	EXTERIOR	Wall Pack HPS 150W	3	188	4380	Wall Pack LED FT TWX 5 kLm PC	3	36	4380	2,470	473	1,997
357	12 : Barbershop	1st	VESTIBULE	12" Rec Sq. CFL 32W 4P	2	34	2080	RT, LED 16W 2P G24D/Q H	2	16	2080	141	67	75
358	12 : Barbershop	1st	VESTIBULE	Exit Sign Combo LED	1	3	8760	No Action - Existing Efficient/LED Fixture	1	3	8760	26	26	0
359	12 : Barbershop	1st	CLASSROOM 4	4' Wrap BP 2L 32W T8	6	59	2080	RT, 4' 10.5W DE LED 2L	6	21	2080	736	262	474
360	12 : Barbershop	1st	CLASSROOM 4	Exit Sign Combo LED	1	3	8760	No Action - Existing Efficient/LED Fixture	1	3	8760	26	26	0
361	12 : Barbershop	1st	CLASSROOM 3	4' Wrap BP 2L 32W T8	9	59	2080	RT, 4' 10.5W DE LED 2L	9	21	2080	1,104	393	711
362	12 : Barbershop	1st	CLASSROOM 3	Exit Sign Combo LED	2	3	8760	No Action - Existing Efficient/LED Fixture	2	3	8760	53	53	0
363	12 : Barbershop	1st	CAGE AREA	4' Wrap BP 2L 32W T8	1	59	2080	RT, 4' 10.5W DE LED 2L	1	21	2080	123	44	79
364	12 : Barbershop	1st	CAGE AREA	12" Rec Sq. CFL 23W Screw In	8	23	2080	LED 9W A19 Replacement	8	10	2080	383	158	225
365	12 : Barbershop	1st	CAGE AREA	Cylinder CFL 23W Screw In	4	23	2080	LED 9W A19 Replacement	4	10	2080	191	79	112
366	12 : Barbershop	1st	RESTROOM	2' Vanity 2L 17W T8	1	33	1456	RT, 2' 7W DE LED 2L	1	14	1456	48	20	28
367	12 : Barbershop	1st	CLASSROOM 1	4' Wrap BP 2L 32W T8	7	59	2080	RT, 4' 10.5W DE LED 2L	7	21	2080	859	306	553
368	12 : Barbershop	1st	CLASSROOM 1	4' Wrap BP 2L 32W T8	2	59	2080	RT, 4' 10.5W DE LED 2L	2	21	2080	245	87	158
369	12 : Barbershop	1st	CLASSROOM 1	Cylinder CFL 23W Screw In	3	23	2080	LED 13W A19 Replacement	3	13	2080	144	81	62
370	12 : Barbershop	1st	RESTROOM	2' Vanity 2L 17W T8	1	33	1456	RT, 2' 7W DE LED 2L	1	14	1456	48	20	28
371	12 : Barbershop	1st	VESTIBULE	12" Rec Sq. CFL 32W Screw In	2	32	2080	LED 13W A19 Replacement	2	13	2080	133	54	79
372	12 : Barbershop	1st	VESTIBULE	Exit Sign Combo LED	1	3	8760	No Action - Existing Efficient/LED Fixture	1	3	8760	26	26	0
373	12 : Barbershop	1st	VESTIBULE	12" Rec Sq. CFL 32W Screw In	3	32	2080	LED 13W A19 Replacement	3	13	2080	200	81	119
374	12 : Barbershop	1st	VESTIBULE	12" Rec Sq. LED 14W A	2	14	2080	LED 13W A19 Replacement	2	13	2080	58	54	4
375	12 : Barbershop	1st	VESTIBULE	2' Wrap 2L T8	1	33	2080	RT, 2' 7W DE LED 2L	1	14	2080	69	29	40
376	12 : Barbershop	1st	BARBERSHOP	4' Wrap LED 18W T8 ULA 2L	4	42	2080	RT, 4' 10.5W DE LED 2L	4	21	2080	349	175	175
377	12 : Barbershop	1st	BARBERSHOP	4' Wrap LED 18W T8 ULA 4L	3	84	2080	RT, 4' 10.5W DE LED 4L	3	42	2080	524	262	262
378	12 : Barbershop	1st	BARBERSHOP	Cylinder CFL 23W Screw In	3	23	2080	LED 13W A19 Replacement	3	13	2080	144	81	62
379	12 : Barbershop	1st	RESTROOM	2' Vanity 2L 17W T8	1	33	1456	RT, 2' 7W DE LED 2L	1	14	1456	48	20	28
380	12 : Barbershop	1st	CLOSET	12" Rec Sq. CFL 32W Screw In	1	32	1000	LED 9W A19 Replacement	1	10	1000	32	10	23
381	12 : Barbershop	1st	LARGE BARBERSHOP	4' Wrap LED 18W T8 ULA 4L	15	84	2080	RT, 4' 10.5W DE LED 4L	15	42	2080	2,621	1,310	1,310
382	12 : Barbershop	1st	LARGE BARBERSHOP	4' Wrap LED 18W T8 ULA 2L	9	42	2080	RT, 4' 10.5W DE LED 2L	9	21	2080	786	393	393
383	12 : Barbershop	1st	LARGE BARBERSHOP	4" Rec Sq. LED 14W A	2	14	2080	LED 13W A19 Replacement	2	13	2080	58	54	4
384	12 : Barbershop	1st	LARGE BARBERSHOP	4' Wrap LED 18W T8 ULA 2L	1	42	2080	RT, 4' 10.5W DE LED 2L	1	21	2080	87	44	44
385	12 : Barbershop	1st	HALLWAY	2x2 Prism Rec 2L 32W U6 T8	2	59	2080	RT, 2' 7W DE LED 2L, 2x2 Refl Kit	2	14	2080	245	58	187
386	12 : Barbershop	1st	HALLWAY	4' Wrap BP 2L 32W T8	1	59	2080	RT, 4' 10.5W DE LED 2L	1	21	2080	123	44	79
387	12 : Barbershop	1st	CLASSROOM	4' Wrap BP 2L 32W T8	6	59	2080	RT, 4' 10.5W DE LED 2L	6	21	2080	736	262	474
388	12 : Barbershop	1st	CLASSROOM	Exit Sign Combo LED	1	3	8760	No Action - Existing Efficient/LED Fixture	1	3	8760	26	26	0
389	12 : Barbershop	1st	TRADES	1x4 Prism Rec 2L 32W T8	13	59	2080	RT, 4' 10.5W DE LED 2L	13	21	2080	1,595	568	1,028
390	12 : Barbershop	1st	OFFICE	1x4 Prism Rec 2L 32W T8	1	59	2080	RT, 4' 10.5W DE LED 2L	1	21	2080	123	44	79
391	12 : Barbershop	1st	RESTROOM	2' Vanity 2L 17W T8	1	33	1456	RT, 2' 7W DE LED 2L	1	14	1456	48	20	28
392	12 : Barbershop	1st	TRADES	Exit Sign Combo LED	1	3	8760	No Action - Existing Efficient/LED Fixture	1	3	8760	26	26	0
393	12 : Barbershop	1st	BENCH	4' Wrap BP 2L	1	72	2080	RT, 4' 10.5W DE LED 2L	1	21	2080	150	44	106
394	12 : Barbershop	Lower Level	LOWER MECHANICAL	8' Industrial LED 18W T8 ULA 2L	3	42	520	RT, 4' 10.5W DE LED 2L	3	21	520	66	33	33
395	12 : Barbershop	Lower Level	LOWER MECHANICAL	4' Strip LED 18W T8 ULA 1L	2	21	520	RT, 4' 10.5W DE LED 1L	2	11	520	22	11	11
396	12 : Barbershop	Lower Level	LOWER MECHANICAL	RLM CFL 32W Screw In	1	32	520	LED 9W A19 Replacement	1	10	520	17	5	12
397	12 : Barbershop	Exterior	EXTERIOR	Wall Pack MH 150W	1	190	4380	Wall Pack LED FT TWX 5 kLm PC	1	36	4380	832	158	675
398	Transfer Building	1st	STORAGE	4' Wrap LED 30W	6	30	1000	No Action - Existing Efficient/LED Fixture	6	30	1000	180	180	0
399	23 : Chapel	Exterior	EXTERIOR	Wall Pack MH 150W	2	190	4380	Wall Pack LED FT TWX 5 kLm PC	2	36	4380	1,664	315	1,349
400	23 : Chapel	1st	HALLWAY	4' Wall Bracket LED 18W T8 ULA 2L	6	42	2080	RT, 4' 10.5W DE LED 2L	6	21	2080	524	262	262
401	23 : Chapel	1st	CONFERENCE	4' Wall Bracket LED 18W T8 ULA 2L	4	42	2080	RT, 4' 10.5W DE LED 2L	4	21	2080	349	175	175
402	23 : Chapel	1st	CONFERENCE	Chandelier LED 14W A 4L	2	56	2080	LED 13W A19 Replacement 4L	2	52	2080	233	216	17
403	23 : Chapel	1st	CONFERENCE	Emergency Fixture	1	0	0	No Action - Emergency Use Only	1	0	0	0	0	0
404	23 : Chapel	1st	CONFERENCE	Exit Sign LED	1	3	8760	No Action - Existing Efficient/LED Fixture	1	3	8760	26	26	0
405	23 : Chapel	1st	OFFICE	4' Wrap BP 2L 32W T8	2	59	2080	RT, 4' 10.5W DE LED 2L	2	21	2080	245	87	158
406	23 : Chapel	1st	STAFF RESTROOM	4' Wrap LED 18W T8 ULA 2L	1	42	1456	RT, 4' 10.5W DE LED 2L	1	21	1456	61	31	31
407	23 : Chapel	1st	INMATE RESTROOM	4' Wrap LED 18W T8 ULA 2L	1	42	1456	RT, 4' 10.5W DE LED 2L	1	21	1456	61	31	31
408	23 : Chapel	1st	CHAPEL	4' Wall Bracket LED 18W T8 ULA 2L	9	42	2080	RT, 4' 10.5W DE LED 2L	9	21	2080	786	393	393
409	23 : Chapel	1st	CHAPEL	Exit Sign Combo LED	1	3	8760	No Action - Existing Efficient/LED Fixture	1	3	8760	26	26	0
410	23 : Chapel	1st	CHAPEL	Chandelier LED 14W A 4L	8	56	2080	LED 13W A19 Replacement 4L	8	52	2080	932	865	67
411	23 : Chapel	1st	STORAGE	4' Wrap BP 2L 32W T8	1	59	1000	RT, 4' 10.5W DE LED 2L	1	21	1000	59	21	38
412	23 : Chapel	1st	OFFICE	2X4 Prism Sur LED 18W T8 ULA 2L	2	42	2080	RT, 4' 10.5W DE LED 2L	2	21	2080	175	87	87
413	23 : Chapel	1st	OFFICE	2X4 Prism Sur LED 18W T8 ULA 2L	2	42	2080	RT, 4' 10.5W DE LED 2L	2	21	2080	175	87	87
414	23 : Chapel	1st	CHAPEL	Track Head LED 14W A	2	14	2080	LED 10W PAR30 Replacement	2	10	2080	58	42	17
415	23 : Chapel	1st	CHAPEL	Track Head LED 17W PAR38	2	17	2080	LED 13W PAR38 Replacement	2	13	2080	71	54	17
416	23 : Chapel	1st	CHAPEL	Track Head LED 7W PAR20	4	7	2080	LED 5W PAR20 Replacement	4	5	2080	58	42	17
417	23 : Chapel	1st	CHAPEL	Emergency Fixture	1	0	0	No Action - Emergency Use Only	1	0	0	0	0	0
418	Atrium	Exterior	EXTERIOR	Wall Pack LED 45W Corn Cob	4	45	4380	Wall Pack LED FT TWX 5 kLm PC	4	36	4380	788	631	158
419	Atrium	Exterior	EXTERIOR	Wall Pack HPS 150W	2	188	4380	Wall Pack LED FT TWX 5 kLm PC	2	36	4380	1,647	315	1,332
420	A : Housing Unit	1st	VESTIBULE	1x4 Prism Rec 2L 32W T8 TP	6	59	8760	RT, 4' 10.5W DE LED 2L TP	6	21	8760	3,101	1,104	1,997
421	A : Housing Unit	1st	CONTROL	2X4 Prism Rec 4L 32W T8	6	112	364	RT, 4' 10.5W DE LED 2L, 2x4 Refl Kit	6	21	364	245	46	199
422	A : Housing Unit	1st	RESTROOM	4' Vanity BP 2L 32W T8 TP	1	59	1456	RT, 4' 10.5W DE LED 2L TP	1	21	1456	86	31	55

423	A : Housing Unit	1st	HALLWAY	Exit Sign Combo LED	1	3	8760	No Action - Existing Efficient/LED Fixture	1	3	8760	26	26	0
424	A : Housing Unit	1st	HALLWAY	4' Vaportight LED 18W T8 ULB 2L	1	36	8760	RT, 4' 10.5W DE LED 2L	1	21	8760	315	184	131
425	A : Housing Unit	1st	JANITOR	1x4 Prism Rec LED 18W T8 ULB 2L TP	2	36	1000	RT, 4' 10.5W DE LED 2L TP	2	21	1000	72	42	30
426	A : Housing Unit	1st	STORAGE	2X4 Prism Rec 2L 32W T8 TP	2	59	1000	RT, 4' 10.5W DE LED 2L TP	2	21	1000	118	42	76
427	A : Housing Unit	1st	STAIR	4' Corner Mount BP 2L 32W T8 TP	2	59	6188	RT, 4' 10.5W DE LED 2L TP	2	21	6188	730	260	470
428	A : Housing Unit	1st	STAIR	Exit Sign Combo LED	1	3	8760	No Action - Existing Efficient/LED Fixture	1	3	8760	26	26	0
429	A : Housing Unit	Upper Level	UPPER MECHANICAL	8' Strip BP 4L 32W T8	4	112	520	RT, 4' 10.5W DE LED 4L	4	42	520	233	87	146
430	A : Housing Unit	Upper Level	UPPER MECHANICAL	Exit Sign LED TP	1	3	8760	No Action - Existing Efficient/LED Fixture	1	3	8760	26	26	0
431	A : Housing Unit	1st	SHOWERS 1-6	4' Corner Mount BP 2L 32W T8 TP	12	59	6188	RT, 4' 10.5W DE LED 2L TP	12	21	6188	4,381	1,559	2,822
432	A : Housing Unit	1st	CELLS 1-50	4' Vandal Proof BP 4L 32W T8	30	112	2912	RT, 4' 10.5W DE LED 4L TP	30	42	2912	9,784	3,669	6,115
433	A : Housing Unit	1st	CELLS 1-50	4' Corner Mount LED 18W T8 ULA 2L TP	20	42	2912	RT, 4' 10.5W DE LED 2L TP	20	21	2912	2,446	1,223	1,223
434	A : Housing Unit	1st	CELLS 1-50	Night Light CFL 7W 2P	50	10	5848	RT, LED 4W 2P GX23 H	50	4	5848	2,924	1,170	1,754
435	A : Housing Unit	1st	UPPER WALKWAY	4' Corner Mount LED 18W T8 ULA 2L TP	30	42	6188	RT, 4' 10.5W DE LED 2L TP	30	21	6188	7,797	3,898	3,898
436	A : Housing Unit	1st	UPPER WALKWAY	Night Light Inc 15W	15	15	5848	LED 6W A19 Replacement	15	6	5848	1,316	526	789
437	A : Housing Unit	1st	UPPER WALKWAY	Exit Sign Combo LED	2	3	8760	No Action - Existing Efficient/LED Fixture	2	3	8760	53	53	0
438	A : Housing Unit	1st	STAIR	4' Corner Mount LED 18W T8 ULA 2L TP	1	42	6188	RT, 4' 10.5W DE LED 2L TP	1	21	6188	260	130	130
439	A : Housing Unit	1st	STAIR	2' Vanity 2L 17W T8	1	33	6188	RT, 2' 7W DE LED 2L	1	14	6188	204	87	118
440	A : Housing Unit	1st	STAIR	Exit Sign Combo LED	1	3	8760	No Action - Existing Efficient/LED Fixture	1	3	8760	26	26	0
441	A : Housing Unit	1st	LOWER WALKWAY	4' Corner Mount LED 18W T8 ULA 2L TP	13	42	6188	RT, 4' 10.5W DE LED 2L TP	13	21	6188	3,379	1,689	1,689
442	A : Housing Unit	1st	LOWER WALKWAY	Night Light Inc 15W	8	15	5848	LED 6W A19 Replacement	8	6	5848	702	281	421
443	A : Housing Unit	1st	LOWER WALKWAY	Exit Sign Combo LED	4	3	8760	No Action - Existing Efficient/LED Fixture	4	3	8760	105	105	0
444	A : Housing Unit	1st	VIRTUAL VISITATION	4' Corner Mount LED 18W T8 ULA 2L TP	3	42	6188	RT, 4' 10.5W DE LED 2L TP	3	21	6188	780	390	390
445	A : Housing Unit	1st	VIRTUAL VISITATION	2X4 Prism Sur 2L 32W T8 TP	8	59	6188	RT, 4' 10.5W DE LED 2L TP	8	21	6188	2,921	1,040	1,881
446	A : Housing Unit	1st	VIRTUAL VISITATION	Wall Pack LED 14W A	2	14	0	No Action - Emergency Use Only	2	14	0	0	0	0
447	A : Housing Unit	1st	VIRTUAL VISITATION	Exit Sign Combo LED	1	3	8760	No Action - Existing Efficient/LED Fixture	1	3	8760	26	26	0
448	A : Housing Unit	1st	OFFICE	4' Wrap BP 2L 32W T8	1	59	3640	RT, 4' 10.5W DE LED 2L	1	21	3640	215	76	138
449	A : Housing Unit	1st	OFFICE	4' Strip BP 1L 32W T8	1	31	3640	RT, 4' 10.5W DE LED 1L	1	11	3640	113	38	75
450	A : Housing Unit	Lower Level	LOWER MECHANICAL	4' Strip LED 18W T8 ULB 2L	2	36	520	RT, 4' 10.5W DE LED 2L	2	21	520	37	22	16
451	A : Housing Unit	Exterior	RIGHT	Canopy HPS 70W	1	95	4380	Wall Pack LED FT TWX 3.2 kLm PC	1	22	4380	416	96	320
452	A : Housing Unit	Exterior	REAR	Canopy HPS 70W	3	95	4380	Wall Pack LED FT TWX 3.2 kLm PC	3	22	4380	1,248	289	959
453	A : Housing Unit	Exterior	REAR	Flood MH 250W	3	295	4380	Flood LED 10 kLm SF PC	3	72	4380	3,876	946	2,930
454	F : Housing Unit	1st	VESTIBULE	1x4 Prism Rec 2L 32W T8 TP	6	59	8760	RT, 4' 10.5W DE LED 2L TP	6	21	8760	3,101	1,104	1,997
455	F : Housing Unit	1st	CONTROL	2X4 Prism Rec 4L 32W T8	6	112	364	RT, 4' 10.5W DE LED 2L, 2x4 Refl Kit	6	21	364	245	46	199
456	F : Housing Unit	1st	RESTROOM	4' Vanity BP 2L 32W T8 TP	1	59	1456	RT, 4' 10.5W DE LED 2L TP	1	21	1456	86	31	55
457	F : Housing Unit	1st	HALLWAY	Exit Sign Combo LED	1	3	8760	No Action - Existing Efficient/LED Fixture	1	3	8760	26	26	0
458	F : Housing Unit	1st	HALLWAY	4' Vaportight LED 18W T8 ULB 2L	1	36	8760	RT, 4' 10.5W DE LED 2L	1	21	8760	315	184	131
459	F : Housing Unit	1st	JANITOR	1x4 Prism Rec LED 18W T8 ULB 2L TP	2	36	1000	RT, 4' 10.5W DE LED 2L TP	2	21	1000	72	42	30
460	F : Housing Unit	1st	STORAGE	2X4 Prism Rec 2L 32W T8 TP	2	59	1000	RT, 4' 10.5W DE LED 2L TP	2	21	1000	118	42	76
461	F : Housing Unit	1st	STAIR	4' Corner Mount BP 2L 32W T8 TP	2	59	6188	RT, 4' 10.5W DE LED 2L TP	2	21	6188	730	260	470
462	F : Housing Unit	1st	STAIR	Exit Sign Combo LED	1	3	8760	No Action - Existing Efficient/LED Fixture	1	3	8760	26	26	0
463	F : Housing Unit	Upper Level	UPPER MECHANICAL	8' Strip BP 4L 32W T8	4	112	520	RT, 4' 10.5W DE LED 4L	4	42	520	233	87	146
464	F : Housing Unit	Upper Level	UPPER MECHANICAL	Exit Sign LED TP	1	3	8760	No Action - Existing Efficient/LED Fixture	1	3	8760	26	26	0
465	F : Housing Unit	1st	SHOWERS 1-6	4' Vandal Proof LED 18W T8 ULA 2L	12	42	6188	RT, 4' 10.5W DE LED 2L TP	12	21	6188	3,119	1,559	1,559
466	F : Housing Unit	1st	CELLS 1-50	4' Vandal Proof BP 4L 32W T8	30	112	2912	RT, 4' 10.5W DE LED 4L TP	30	42	2912	9,784	3,669	6,115
467	F : Housing Unit	1st	CELLS 1-50	4' Corner Mount LED 18W T8 ULA 2L TP	20	42	2912	RT, 4' 10.5W DE LED 2L TP	20	21	2912	2,446	1,223	1,223
468	F : Housing Unit	1st	CELLS 1-50	Night Light CFL 7W 2P	50	10	5848	RT, LED 4W 2P GX23 H	50	4	5848	2,924	1,170	1,754
469	F : Housing Unit	Upper Level	UPPER WALKWAY	4' Corner Mount LED 18W T8 ULA 2L TP	30	42	6188	RT, 4' 10.5W DE LED 2L TP	30	21	6188	7,797	3,898	3,898
470	F : Housing Unit	Upper Level	UPPER WALKWAY	Night Light Inc 15W	15	15	5848	LED 6W A19 Replacement	15	6	5848	1,316	526	789
471	F : Housing Unit	Upper Level	UPPER WALKWAY	Exit Sign Combo LED	2	3	8760	No Action - Existing Efficient/LED Fixture	2	3	8760	53	53	0
472	F : Housing Unit	1st	STAIR	4' Corner Mount LED 18W T8 ULA 2L TP	1	42	6188	RT, 4' 10.5W DE LED 2L TP	1	21	6188	260	130	130
473	F : Housing Unit	1st	STAIR	2' Vanity 2L 17W T8	1	33	6188	RT, 2' 7W DE LED 2L	1	14	6188	204	87	118
474	F : Housing Unit	1st	STAIR	Exit Sign Combo LED	1	3	8760	No Action - Existing Efficient/LED Fixture	1	3	8760	26	26	0
475	F : Housing Unit	Lower Level	LOWER WALKWAY	4' Corner Mount LED 18W T8 ULA 2L TP	13	42	6188	RT, 4' 10.5W DE LED 2L TP	13	21	6188	3,379	1,689	1,689
476	F : Housing Unit	Lower Level	LOWER WALKWAY	Night Light Inc 15W	8	15	5848	LED 6W A19 Replacement	8	6	5848	702	281	421
477	F : Housing Unit	Lower Level	LOWER WALKWAY	Exit Sign Combo LED	4	3	8760	No Action - Existing Efficient/LED Fixture	4	3	8760	105	105	0
478	F : Housing Unit	1st	VIRTUAL VISITATION	4' Corner Mount LED 18W T8 ULA 2L TP	3	42	6188	RT, 4' 10.5W DE LED 2L TP	3	21	6188	780	390	390
479	F : Housing Unit	1st	VIRTUAL VISITATION	2X4 Prism Sur 2L 32W T8 TP	8	59	6188	RT, 4' 10.5W DE LED 2L TP	8	21	6188	2,921	1,040	1,881
480	F : Housing Unit	1st	VIRTUAL VISITATION	Wall Pack LED 14W A	2	14	0	No Action - Emergency Use Only	2	14	0	0	0	0
481	F : Housing Unit	1st	VIRTUAL VISITATION	Exit Sign Combo LED	1	3	8760	No Action - Existing Efficient/LED Fixture	1	3	8760	26	26	0
482	F : Housing Unit	1st	OFFICE	4' Wrap BP 2L 32W T8	1	59	3640	RT, 4' 10.5W DE LED 2L	1	21	3640	215	76	138
483	F : Housing Unit	1st	OFFICE	4' Strip BP 1L 32W T8	1	31	3640	RT, 4' 10.5W DE LED 1L	1	11	3640	113	38	75
484	F : Housing Unit	Exterior	FRONT	Canopy HPS 70W	1	95	4380	Wall Pack LED FT TWX 3.2 kLm PC	1	22	4380	416	96	320
485	F : Housing Unit	1st	JANITOR	1x4 Prism Rec LED 18W T8 ULB 2L TP	2	36	1000	RT, 4' 10.5W DE LED 2L TP	2	21	1000	72	42	30
486	F : Housing Unit	1st	STORAGE	2X4 Prism Rec 2L 32W T8 TP	2	59	1000	RT, 4' 10.5W DE LED 2L TP	2	21	1000	118	42	76
487	F : Housing Unit	1st	STAIR	4' Corner Mount BP 2L 32W T8 TP	2	59	6188	RT, 4' 10.5W DE LED 2L TP	2	21	6188	730	260	470
488	F : Housing Unit	1st	STAIR	Exit Sign Combo LED	1	3	8760	No Action - Existing Efficient/LED Fixture	1	3	8760	26	26	0
489	F : Housing Unit	Upper Level	UPPER MECHANICAL	8' Strip BP 4L 32W T8	4	112	520	RT, 4' 10.5W DE LED 4L	4	42	520	233	87	146
490	F : Housing Unit	Upper Level	UPPER MECHANICAL	Exit Sign LED TP	1	3	8760	No Action - Existing Efficient/LED Fixture	1	3	8760	26	26	0
491	F : Housing Unit	1st	SHOWERS 1-6	4' Vandal Proof LED 18W T8 ULA 2L	12	42	6188	RT, 4' 10.5W DE LED 2L TP	12	21	6188	3,119	1,559	1,559
492	F : Housing Unit	1st	CELLS 1-50	4' Vandal Proof BP 4L 32W T8	30	112	2912	RT, 4' 10.5W DE LED 4L TP	30	42	2912	9,784	3,669	6,115
493	F : Housing Unit	1st	CELLS 1-50	4' Corner Mount LED 18W T8 ULA 2L TP	20	42	2912	RT, 4' 10.5W DE LED 2L TP	20	21	2912	2,446	1,223	1,223
494	F : Housing Unit	1st	CELLS 1-50	Night Light CFL 7W 2P	50	10	5848	RT, LED 4W 2P GX23 H	50	4	5848	2,924	1,170	1,754
495	F : Housing Unit	1st	UPPER WALKWAY	4' Corner Mount LED 18W T8 ULA 2L TP	30	42	6188	RT, 4' 10.5W DE LED 2L TP	30	21	6188	7,797	3,898	3,898
496	F : Housing Unit	1st	UPPER WALKWAY	Night Light Inc 15W	15	15	5848	LED 6W A19 Replacement	15	6	5848	1,316	526	789
497	F : Housing Unit	1st	UPPER WALKWAY	Exit Sign Combo LED	2	3	8760	No Action - Existing Efficient/LED Fixture	2	3	8760	53	53	0
498	F : Housing Unit	1st	STAIR	4' Corner Mount LED 18W T8 ULA 2L TP	1	42	6188	RT, 4' 10.5W DE LED 2L TP	1	21	6188	260	130	130
499	F : Housing Unit	1st	STAIR	2' Vanity 2L 17W T8	1	33	6188	RT, 2' 7W DE LED 2L	1	14	6188	204	87	118
500	F : Housing Unit	1st	STAIR	Exit Sign Combo LED	1	3	8760	No Action - Existing Efficient/LED Fixture	1	3	8760	26	26	0
501	F : Housing Unit	Lower Level	LOWER WALKWAY	4' Corner Mount LED 18W T8 ULA 2L TP	13	42	6188	RT, 4' 10.5W DE LED 2L TP	13	21	6188	3,379	1,689	1,689
502	F : Housing Unit	Lower Level	LOWER WALKWAY	Night Light Inc 15W	8	15	5848	LED 6W A19 Replacement	8	6	5848	702	281	421
503	F : Housing Unit	Lower Level	LOWER WALKWAY	Exit Sign Combo LED	4	3	8760	No Action - Existing Efficient/LED Fixture	4	3	8760	105	105	0
504	F : Housing Unit	1st	VIRTUAL VISITATION	4' Corner Mount LED 18W T8 ULA 2L TP	3	42	6188	RT, 4' 10.5W DE LED 2L TP	3	21	6188	780	390	390
505	F : Housing Unit	1st	VIRTUAL VISITATION	2X4 Prism Sur 2L 32W T8 TP	8	59	6188	RT, 4' 10.5W DE LED 2L TP	8	21	6188	2,921	1,040	1,881
506	F : Housing Unit	1st	VIRTUAL VISITATION	Wall Pack LED 14W A	2	14	0	No Action - Emergency Use Only	2	14	0	0	0	0
507	F : Housing Unit	1st	VIRTUAL VISITATION	Exit Sign Combo LED	1	3	8760	No Action - Existing Efficient/LED Fixture	1	3	8760	26	26	0

508	F : Housing Unit	1st	OFFICE	4' Wrap BP 2L 32W T8	1	59	3640	RT, 4' 10.5W DE LED 2L	1	21	3640	215	76	138
509	F : Housing Unit	1st	OFFICE	4' Strip BP 1L 32W T8	1	31	3640	RT, 4' 10.5W DE LED 1L	1	11	3640	113	38	75
510	B : Housing Unit	1st	OFFICE	4' Wrap BP 2L 32W T8	2	59	3640	RT, 4' 10.5W DE LED 2L	2	21	3640	430	153	277
511	B : Housing Unit	1st	OFFICE	2' Wrap 2L T8	1	33	0	RT, 2' 7W DE LED 2L	1	14	0	0	0	0
512	B : Housing Unit	1st	RESTROOM	2' Vanity 2L 17W T8	1	33	1456	RT, 2' 7W DE LED 2L	1	14	1456	48	20	28
513	B : Housing Unit	Lower Level	LOWER CELLS 1-14	2' Vanity 2L 17W T8	14	33	2912	RT, 2' 7W DE LED 2L	14	14	2912	1,345	571	775
514	B : Housing Unit	1st	MECHANICAL	4' Industrial LED 18W T8 ULB 1L	2	18	520	RT, 4' 10.5W DE LED 1L	2	11	520	19	11	8
515	B : Housing Unit	1st	JANITOR	Drum LED 14W A 2L	1	28	1000	LED 9W A19 Replacement 2L	1	19	1000	28	19	9
516	B : Housing Unit	1st	SHOWER	1x4 Prism Rec 2L 32W T8	1	59	6188	RT, 4' 10.5W DE LED 2L	1	21	6188	365	130	235
517	B : Housing Unit	1st	SHOWER	Drum LED 10W	1	10	6188	No Action - Existing Efficient/LED Fixture	1	10	6188	62	62	0
518	B : Housing Unit	1st	SHOWER	Canopy LED 14W A	1	14	6188	LED 13W A19 Replacement	1	13	6188	87	80	6
519	B : Housing Unit	1st	JANITOR	Drum LED 14W A 2L	1	28	1000	LED 9W A19 Replacement 2L	1	19	1000	28	19	9
520	B : Housing Unit	1st	STAIR	12" Rec Sq. LED 14W A	5	14	6188	LED 13W A19 Replacement	5	13	6188	433	402	31
521	B : Housing Unit	1st	STAIR	Exit Sign Combo LED	2	3	8760	No Action - Existing Efficient/LED Fixture	2	3	8760	53	53	0
522	B : Housing Unit	1st	STAIR	Step Light CFL 13W Screw In	4	13	0	No Action - Emergency Use Only	4	13	0	0	0	0
523	B : Housing Unit	Upper Level	UPPER CELLS 1-16	2' Vanity 2L 17W T8	16	33	2912	RT, 2' 7W DE LED 2L	16	14	2912	1,538	652	885
524	B : Housing Unit	1st	TV ROOM	4' Wrap LED 25W	4	25	6188	No Action - Existing Efficient/LED Fixture	4	25	6188	619	619	0
525	B : Housing Unit	1st	MECHANICAL	4' Industrial LED 18W T8 ULB 1L	2	18	520	RT, 4' 10.5W DE LED 1L	2	11	520	19	11	8
526	B : Housing Unit	1st	LOWER/UPPER HALLWAY	Exit Sign Combo LED	8	3	8760	No Action - Existing Efficient/LED Fixture	8	3	8760	210	210	0
527	B : Housing Unit	1st	LOWER/UPPER HALLWAY	12" Rec Sq. LED 14W A	16	14	6188	LED 13W A19 Replacement	16	13	6188	1,386	1,287	99
528	B : Housing Unit	1st	LOWER/UPPER HALLWAY	12" Rec Sq. LED 14W A	16	14	6188	LED 13W A19 Replacement	16	13	6188	1,386	1,287	99
529	B : Housing Unit	1st	STORAGE	Drum LED 14W A	1	14	1000	LED 9W A19 Replacement	1	10	1000	14	10	5
530	B : Housing Unit	1st	SHOWER	1x4 Prism Rec 2L 32W T8	1	59	6188	RT, 4' 10.5W DE LED 2L	1	21	6188	365	130	235
531	B : Housing Unit	1st	SHOWER	Canopy LED 14W A	2	14	6188	LED 13W A19 Replacement	2	13	6188	173	161	12
532	B : Housing Unit	1st	JANITOR	Drum LED 14W A 2L	1	28	1000	LED 9W A19 Replacement 2L	1	19	1000	28	19	9
533	B : Housing Unit	1st	STAIR	12" Rec Sq. LED 14W A	3	14	6188	LED 13W A19 Replacement	3	13	6188	260	241	19
534	B : Housing Unit	1st	STAIR	Step Light CFL 13W Screw In	3	13	0	No Action - Emergency Use Only	3	13	0	0	0	0
535	B : Housing Unit	Exterior	EXTERIOR	Wall Pack LED 45W Corn Cob	2	45	4380	Wall Pack LED FT TWX 5 kLm PC	2	36	4380	394	315	79
536	B : Housing Unit	Exterior	DOORWAY REMOTE HEAD	Emergency Fixture	2	0	0	No Action - Emergency Use Only	2	0	0	0	0	0
537	B : Housing Unit	Exterior	DISCONNECTED FLOOD	Flood Quartz 500W	1	500	0	No Action - Not In Use	1	500	0	0	0	0
538	B : Housing Unit	Exterior	DISCONNECTED FLOOD	Flood Quartz 500W	1	500	0	No Action - Not In Use	1	500	0	0	0	0
539	C : Housing Unit	1st	OFFICE	4' Wrap BP 2L 32W T8	2	59	3640	RT, 4' 10.5W DE LED 2L	2	21	3640	430	153	277
540	C : Housing Unit	1st	OFFICE	2' Wrap 2L T8	1	33	0	RT, 2' 7W DE LED 2L	1	14	0	0	0	0
541	C : Housing Unit	1st	RESTROOM	2' Vanity 2L 17W T8	1	33	1456	RT, 2' 7W DE LED 2L	1	14	1456	48	20	28
542	C : Housing Unit	Lower Level	LOWER CELLS 1-14	2' Vanity 2L 17W T8	14	33	2912	RT, 2' 7W DE LED 2L	14	14	2912	1,345	571	775
543	C : Housing Unit	1st	MECHANICAL	4' Industrial LED 18W T8 ULB 1L	2	18	520	RT, 4' 10.5W DE LED 1L	2	11	520	19	11	8
544	C : Housing Unit	1st	JANITOR	Drum LED 14W A 2L	1	28	1000	LED 9W A19 Replacement 2L	1	19	1000	28	19	9
545	C : Housing Unit	1st	SHOWER	1x4 Prism Rec 2L 32W T8	1	59	6188	RT, 4' 10.5W DE LED 2L	1	21	6188	365	130	235
546	C : Housing Unit	1st	SHOWER	Drum LED 10W	1	10	6188	No Action - Existing Efficient/LED Fixture	1	10	6188	62	62	0
547	C : Housing Unit	1st	SHOWER	Canopy LED 14W A	1	14	6188	LED 13W A19 Replacement	1	13	6188	87	80	6
548	C : Housing Unit	1st	JANITOR	Drum LED 14W A 2L	1	28	1000	LED 9W A19 Replacement 2L	1	19	1000	28	19	9
549	C : Housing Unit	1st	STAIR	12" Rec Sq. LED 14W A	5	14	6188	LED 13W A19 Replacement	5	13	6188	433	402	31
550	C : Housing Unit	1st	STAIR	Exit Sign Combo LED	2	3	8760	No Action - Existing Efficient/LED Fixture	2	3	8760	53	53	0
551	C : Housing Unit	1st	STAIR	Step Light CFL 13W Screw In	4	13	0	No Action - Emergency Use Only	4	13	0	0	0	0
552	C : Housing Unit	Upper Level	UPPER CELLS 1-16	2' Vanity 2L 17W T8	16	33	2912	RT, 2' 7W DE LED 2L	16	14	2912	1,538	652	885
553	C : Housing Unit	1st	TV ROOM	4' Wrap BP 2L 32W T8	4	59	6188	RT, 4' 10.5W DE LED 2L	4	21	6188	1,460	520	941
554	C : Housing Unit	1st	MECHANICAL	4' Industrial LED 18W T8 ULB 1L	2	18	520	RT, 4' 10.5W DE LED 1L	2	11	520	19	11	8
555	C : Housing Unit	1st	LOWER/UPPER HALLWAY	Exit Sign Combo LED	8	3	8760	No Action - Existing Efficient/LED Fixture	8	3	8760	210	210	0
556	C : Housing Unit	1st	LOWER/UPPER HALLWAY	12" Rec Sq. LED 14W A	16	14	6188	LED 13W A19 Replacement	16	13	6188	1,386	1,287	99
557	C : Housing Unit	1st	LOWER/UPPER HALLWAY	12" Rec Sq. LED 14W A	16	14	6188	LED 13W A19 Replacement	16	13	6188	1,386	1,287	99
558	C : Housing Unit	1st	STORAGE	Drum LED 14W A	1	14	1000	LED 9W A19 Replacement	1	10	1000	14	10	5
559	C : Housing Unit	1st	SHOWER	1x4 Prism Rec 2L 32W T8	1	59	6188	RT, 4' 10.5W DE LED 2L	1	21	6188	365	130	235
560	C : Housing Unit	1st	SHOWER	Canopy LED 14W A	2	14	6188	LED 13W A19 Replacement	2	13	6188	173	161	12
561	C : Housing Unit	1st	JANITOR	Drum LED 14W A 2L	1	28	1000	LED 9W A19 Replacement 2L	1	19	1000	28	19	9
562	C : Housing Unit	1st	STAIR	12" Rec Sq. LED 14W A	3	14	6188	LED 13W A19 Replacement	3	13	6188	260	241	19
563	C : Housing Unit	1st	STAIR	Step Light CFL 13W Screw In	3	13	0	No Action - Emergency Use Only	3	13	0	0	0	0
564	C : Housing Unit	Exterior	EXTERIOR	Wall Pack LED 45W Corn Cob	2	45	4380	Wall Pack LED FT TWX 5 kLm PC	2	36	4380	394	315	79
565	C : Housing Unit	Exterior	DOORWAY REMOTE HEAD	Emergency Fixture	2	0	0	No Action - Emergency Use Only	2	0	0	0	0	0
566	C : Housing Unit	Exterior	DISCONNECTED FLOOD	Flood Quartz 500W	1	500	0	No Action - Not In Use	1	500	0	0	0	0
567	C : Housing Unit	Exterior	DISCONNECTED FLOOD	Flood Quartz 500W	1	500	0	No Action - Not In Use	1	500	0	0	0	0
568	E : Housing Unit	1st	OFFICE	4' Wrap BP 2L 32W T8	2	59	3640	RT, 4' 10.5W DE LED 2L	2	21	3640	430	153	277
569	E : Housing Unit	1st	OFFICE	2' Wrap 2L T8	1	33	0	RT, 2' 7W DE LED 2L	1	14	0	0	0	0
570	E : Housing Unit	1st	RESTROOM	2' Vanity 2L 17W T8	1	33	1456	RT, 2' 7W DE LED 2L	1	14	1456	48	20	28
571	E : Housing Unit	Lower Level	LOWER CELLS 1-14	2' Vanity 2L 17W T8	14	33	2912	RT, 2' 7W DE LED 2L	14	14	2912	1,345	571	775
572	E : Housing Unit	1st	MECHANICAL	4' Industrial LED 18W T8 ULB 1L	2	18	520	RT, 4' 10.5W DE LED 1L	2	11	520	19	11	8
573	E : Housing Unit	1st	JANITOR	Drum LED 14W A 2L	1	28	1000	LED 9W A19 Replacement 2L	1	19	1000	28	19	9
574	E : Housing Unit	1st	SHOWER	1x4 Prism Rec 2L 32W T8	1	59	6188	RT, 4' 10.5W DE LED 2L	1	21	6188	365	130	235
575	E : Housing Unit	1st	SHOWER	Drum LED 10W	1	10	6188	No Action - Existing Efficient/LED Fixture	1	10	6188	62	62	0
576	E : Housing Unit	1st	SHOWER	Canopy LED 14W A	1	14	6188	LED 13W A19 Replacement	1	13	6188	87	80	6
577	E : Housing Unit	1st	JANITOR	Drum LED 14W A 2L	1	28	1000	LED 9W A19 Replacement 2L	1	19	1000	28	19	9
578	E : Housing Unit	1st	STAIR	12" Rec Sq. LED 14W A	5	14	6188	LED 13W A19 Replacement	5	13	6188	433	402	31
579	E : Housing Unit	1st	STAIR	Exit Sign Combo LED	2	3	8760	No Action - Existing Efficient/LED Fixture	2	3	8760	53	53	0
580	E : Housing Unit	1st	STAIR	Step Light CFL 13W Screw In	4	13	0	No Action - Emergency Use Only	4	13	0	0	0	0
581	E : Housing Unit	Upper Level	UPPER CELLS 1-16	2' Vanity 2L 17W T8	16	33	2912	RT, 2' 7W DE LED 2L	16	14	2912	1,538	652	885
582	E : Housing Unit	1st	TV ROOM	4' Wrap BP 2L 32W T8	4	59	6188	RT, 4' 10.5W DE LED 2L	4	21	6188	1,460	520	941
583	E : Housing Unit	1st	MECHANICAL	4' Industrial LED 18W T8 ULB 1L	2	18	520	RT, 4' 10.5W DE LED 1L	2	11	520	19	11	8
584	E : Housing Unit	1st	LOWER/UPPER HALLWAY	Exit Sign Combo LED	8	3	8760	No Action - Existing Efficient/LED Fixture	8	3	8760	210	210	0
585	E : Housing Unit	1st	LOWER/UPPER HALLWAY	12" Rec Sq. LED 14W A	16	14	6188	LED 13W A19 Replacement	16	13	6188	1,386	1,287	99
586	E : Housing Unit	1st	LOWER/UPPER HALLWAY	12" Rec Sq. LED 14W A	16	14	6188	LED 13W A19 Replacement	16	13	6188	1,386	1,287	99
587	E : Housing Unit	1st	STORAGE	Drum LED 14W A	1	14	1000	LED 9W A19 Replacement	1	10	1000	14	10	5
588	E : Housing Unit	1st	SHOWER	1x4 Prism Rec 2L 32W T8	1	59	6188	RT, 4' 10.5W DE LED 2L	1	21	6188	365	130	235
589	E : Housing Unit	1st	SHOWER	Canopy LED 14W A	2	14	6188	LED 13W A19 Replacement	2	13	6188	173	161	12
590	E : Housing Unit	1st	JANITOR	Drum LED 14W A 2L	1	28	1000	LED 9W A19 Replacement 2L	1	19	1000	28	19	9
591	E : Housing Unit	1st	STAIR	12" Rec Sq. LED 14W A	3	14	6188	LED 13W A19 Replacement	3	13	6188	260	241	19
592	E : Housing Unit	1st	STAIR	Step Light CFL 13W Screw In	3	13	0	No Action - Emergency Use Only	3	13	0	0	0	0

593	E : Housing Unit	Exterior	EXTERIOR	Wall Pack LED 45W Corn Cob	2	45	4380	Wall Pack LED FT TWX 5 kLm PC	2	36	4380	394	315	79
594	E : Housing Unit	Exterior	DOORWAY REMOTE HEAD	Emergency Fixture	2	0	0	No Action - Emergency Use Only	2	0	0	0	0	0
595	E : Housing Unit	Exterior	DISCONNECTED FLOOD	Flood Quartz 500W	1	500	0	No Action - Not In Use	1	500	0	0	0	0
596	E : Housing Unit	Exterior	DISCONNECTED FLOOD	Flood Quartz 500W	1	500	0	No Action - Not In Use	1	500	0	0	0	0
597	I : Housing Unit	1st	OFFICE	4' Wrap BP 2L 32W T8	2	59	3640	RT, 4' 10.5W DE LED 2L	2	21	3640	430	153	277
598	I : Housing Unit	1st	OFFICE	2' Wrap 2L T8	1	33	0	RT, 2' 7W DE LED 2L	1	14	0	0	0	0
599	I : Housing Unit	1st	RESTROOM	2' Vanity 2L 17W T8	1	33	1456	RT, 2' 7W DE LED 2L	1	14	1456	48	20	28
600	I : Housing Unit	Lower Level	LOWER CELLS 1-14	2' Vanity 2L 17W T8	14	33	2912	RT, 2' 7W DE LED 2L	14	14	2912	1,345	571	775
601	I : Housing Unit	1st	MECHANICAL	4' Industrial LED 18W T8 ULB 1L	2	18	520	RT, 4' 10.5W DE LED 1L	2	11	520	19	11	8
602	I : Housing Unit	1st	JANITOR	Drum LED 14W A 2L	1	28	1000	LED 9W A19 Replacement 2L	1	19	1000	28	19	9
603	I : Housing Unit	1st	SHOWER	1x4 Prism Rec 2L 32W T8	1	59	6188	RT, 4' 10.5W DE LED 2L	1	21	6188	365	130	235
604	I : Housing Unit	1st	SHOWER	Drum LED 10W	1	10	6188	No Action - Existing Efficient/LED Fixture	1	10	6188	62	62	0
605	I : Housing Unit	1st	SHOWER	Canopy LED 14W A	1	14	6188	LED 13W A19 Replacement	1	13	6188	87	80	6
606	I : Housing Unit	1st	JANITOR	Drum LED 14W A 2L	1	28	1000	LED 9W A19 Replacement 2L	1	19	1000	28	19	9
607	I : Housing Unit	1st	STAIR	12" Rec Sq. LED 14W A	5	14	6188	LED 13W A19 Replacement	5	13	6188	433	402	31
608	I : Housing Unit	1st	STAIR	Exit Sign Combo LED	2	3	8760	No Action - Existing Efficient/LED Fixture	2	3	8760	53	53	0
609	I : Housing Unit	1st	STAIR	Step Light CFL 13W Screw In	4	13	0	No Action - Emergency Use Only	4	13	0	0	0	0
610	I : Housing Unit	Upper Level	UPPER CELLS 1-16	2' Vanity 2L 17W T8	16	33	2912	RT, 2' 7W DE LED 2L	16	14	2912	1,538	652	885
611	I : Housing Unit	1st	TV ROOM	4' Wrap BP 2L 32W T8	4	59	6188	RT, 4' 10.5W DE LED 2L	4	21	6188	1,460	520	941
612	I : Housing Unit	1st	MECHANICAL	4' Industrial LED 18W T8 ULB 1L	2	18	520	RT, 4' 10.5W DE LED 1L	2	11	520	19	11	8
613	I : Housing Unit	1st	LOWER/UPPER HALLWAY	Exit Sign Combo LED	8	3	8760	No Action - Existing Efficient/LED Fixture	8	3	8760	210	210	0
614	I : Housing Unit	1st	LOWER/UPPER HALLWAY	12" Rec Sq. LED 14W A	16	14	6188	LED 13W A19 Replacement	16	13	6188	1,386	1,287	99
615	I : Housing Unit	1st	LOWER/UPPER HALLWAY	12" Rec Sq. LED 14W A	16	14	6188	LED 13W A19 Replacement	16	13	6188	1,386	1,287	99
616	I : Housing Unit	1st	STORAGE	Drum LED 14W A	1	14	1000	LED 9W A19 Replacement	1	10	1000	14	10	5
617	I : Housing Unit	1st	SHOWER	1x4 Prism Rec 2L 32W T8	1	59	6188	RT, 4' 10.5W DE LED 2L	1	21	6188	365	130	235
618	I : Housing Unit	1st	SHOWER	Canopy LED 14W A	2	14	6188	LED 13W A19 Replacement	2	13	6188	173	161	12
619	I : Housing Unit	1st	JANITOR	Drum LED 14W A 2L	1	28	1000	LED 9W A19 Replacement 2L	1	19	1000	28	19	9
620	I : Housing Unit	1st	STAIR	12" Rec Sq. LED 14W A	3	14	6188	LED 13W A19 Replacement	3	13	6188	260	241	19
621	I : Housing Unit	1st	STAIR	Step Light CFL 13W Screw In	3	13	0	No Action - Emergency Use Only	3	13	0	0	0	0
622	I : Housing Unit	Exterior	EXTERIOR	Wall Pack LED 45W Corn Cob	2	45	4380	Wall Pack LED FT TWX 5 kLm PC	2	36	4380	394	315	79
623	I : Housing Unit	Exterior	DOORWAY REMOTE HEAD	Emergency Fixture	2	0	0	No Action - Emergency Use Only	2	0	0	0	0	0
624	I : Housing Unit	Exterior	DISCONNECTED FLOOD	Flood Quartz 500W	1	500	0	No Action - Not In Use	1	500	0	0	0	0
625	I : Housing Unit	Exterior	DISCONNECTED FLOOD	Flood Quartz 500W	1	500	0	No Action - Not In Use	1	500	0	0	0	0
626	J : Housing Unit	1st	OFFICE	4' Wrap BP 2L 32W T8	2	59	3640	RT, 4' 10.5W DE LED 2L	2	21	3640	430	153	277
627	J : Housing Unit	1st	OFFICE	2' Wrap 2L T8	1	33	0	RT, 2' 7W DE LED 2L	1	14	0	0	0	0
628	J : Housing Unit	1st	RESTROOM	2' Vanity 2L 17W T8	1	33	1456	RT, 2' 7W DE LED 2L	1	14	1456	48	20	28
629	J : Housing Unit	Lower Level	LOWER CELLS 1-14	2' Vanity 2L 17W T8	14	33	2912	RT, 2' 7W DE LED 2L	14	14	2912	1,345	571	775
630	J : Housing Unit	1st	MECHANICAL	4' Industrial LED 18W T8 ULB 1L	2	18	520	RT, 4' 10.5W DE LED 1L	2	11	520	19	11	8
631	J : Housing Unit	1st	JANITOR	Drum LED 14W A 2L	1	28	1000	LED 9W A19 Replacement 2L	1	19	1000	28	19	9
632	J : Housing Unit	1st	SHOWER	1x4 Prism Rec 2L 32W T8	1	59	6188	RT, 4' 10.5W DE LED 2L	1	21	6188	365	130	235
633	J : Housing Unit	1st	SHOWER	Drum LED 10W	1	10	6188	No Action - Existing Efficient/LED Fixture	1	10	6188	62	62	0
634	J : Housing Unit	1st	SHOWER	Canopy LED 14W A	1	14	6188	LED 13W A19 Replacement	1	13	6188	87	80	6
635	J : Housing Unit	1st	JANITOR	Drum LED 14W A 2L	1	28	1000	LED 9W A19 Replacement 2L	1	19	1000	28	19	9
636	J : Housing Unit	1st	STAIR	12" Rec Sq. LED 14W A	5	14	6188	LED 13W A19 Replacement	5	13	6188	433	402	31
637	J : Housing Unit	1st	STAIR	Exit Sign Combo LED	2	3	8760	No Action - Existing Efficient/LED Fixture	2	3	8760	53	53	0
638	J : Housing Unit	1st	STAIR	Step Light CFL 13W Screw In	4	13	0	No Action - Emergency Use Only	4	13	0	0	0	0
639	J : Housing Unit	Upper Level	UPPER CELLS 1-16	2' Vanity 2L 17W T8	16	33	2912	RT, 2' 7W DE LED 2L	16	14	2912	1,538	652	885
640	J : Housing Unit	1st	TV ROOM	4' Wrap BP 2L 32W T8	4	59	6188	RT, 4' 10.5W DE LED 2L	4	21	6188	1,460	520	941
641	J : Housing Unit	1st	MECHANICAL	4' Industrial LED 18W T8 ULB 1L	2	18	520	RT, 4' 10.5W DE LED 1L	2	11	520	19	11	8
642	J : Housing Unit	1st	LOWER/UPPER HALLWAY	Exit Sign Combo LED	8	3	8760	No Action - Existing Efficient/LED Fixture	8	3	8760	210	210	0
643	J : Housing Unit	1st	LOWER/UPPER HALLWAY	12" Rec Sq. LED 14W A	16	14	6188	LED 13W A19 Replacement	16	13	6188	1,386	1,287	99
644	J : Housing Unit	1st	LOWER/UPPER HALLWAY	12" Rec Sq. LED 14W A	16	14	6188	LED 13W A19 Replacement	16	13	6188	1,386	1,287	99
645	J : Housing Unit	1st	STORAGE	Drum LED 14W A	1	14	1000	LED 9W A19 Replacement	1	10	1000	14	10	5
646	J : Housing Unit	1st	SHOWER	1x4 Prism Rec 2L 32W T8	1	59	6188	RT, 4' 10.5W DE LED 2L	1	21	6188	365	130	235
647	J : Housing Unit	1st	SHOWER	Canopy LED 14W A	2	14	6188	LED 13W A19 Replacement	2	13	6188	173	161	12
648	J : Housing Unit	1st	JANITOR	Drum LED 14W A 2L	1	28	1000	LED 9W A19 Replacement 2L	1	19	1000	28	19	9
649	J : Housing Unit	1st	STAIR	12" Rec Sq. LED 14W A	3	14	6188	LED 13W A19 Replacement	3	13	6188	260	241	19
650	J : Housing Unit	1st	STAIR	Step Light CFL 13W Screw In	3	13	0	No Action - Emergency Use Only	3	13	0	0	0	0
651	J : Housing Unit	Exterior	EXTERIOR	Wall Pack LED 45W Corn Cob	2	45	4380	Wall Pack LED FT TWX 5 kLm PC	2	36	4380	394	315	79
652	J : Housing Unit	Exterior	DOORWAY REMOTE HEAD	Emergency Fixture	2	0	0	No Action - Emergency Use Only	2	0	0	0	0	0
653	J : Housing Unit	Exterior	DISCONNECTED FLOOD	Flood Quartz 500W	1	500	0	No Action - Not In Use	1	500	0	0	0	0
654	J : Housing Unit	Exterior	DISCONNECTED FLOOD	Flood Quartz 500W	1	500	0	No Action - Not In Use	1	500	0	0	0	0
655	L : Housing Unit	1st	OFFICE	4' Wrap BP 2L 32W T8	2	59	3640	RT, 4' 10.5W DE LED 2L	2	21	3640	430	153	277
656	L : Housing Unit	1st	OFFICE	2' Wrap 2L T8	1	33	0	RT, 2' 7W DE LED 2L	1	14	0	0	0	0
657	L : Housing Unit	1st	RESTROOM	2' Vanity 2L 17W T8	1	33	1456	RT, 2' 7W DE LED 2L	1	14	1456	48	20	28
658	L : Housing Unit	Lower Level	LOWER CELLS 1-14	2' Vanity 2L 17W T8	14	33	2912	RT, 2' 7W DE LED 2L	14	14	2912	1,345	571	775
659	L : Housing Unit	1st	MECHANICAL	4' Industrial LED 18W T8 ULB 1L	2	18	520	RT, 4' 10.5W DE LED 1L	2	11	520	19	11	8
660	L : Housing Unit	1st	JANITOR	Drum LED 14W A 2L	1	28	1000	LED 9W A19 Replacement 2L	1	19	1000	28	19	9
661	L : Housing Unit	1st	SHOWER	1x4 Prism Rec 2L 32W T8	1	59	6188	RT, 4' 10.5W DE LED 2L	1	21	6188	365	130	235
662	L : Housing Unit	1st	SHOWER	Drum LED 10W	1	10	6188	No Action - Existing Efficient/LED Fixture	1	10	6188	62	62	0
663	L : Housing Unit	1st	SHOWER	Canopy LED 14W A	1	14	6188	LED 13W A19 Replacement	1	13	6188	87	80	6
664	L : Housing Unit	1st	JANITOR	Drum LED 14W A 2L	1	28	1000	LED 9W A19 Replacement 2L	1	19	1000	28	19	9
665	L : Housing Unit	1st	STAIR	12" Rec Sq. LED 14W A	5	14	6188	LED 13W A19 Replacement	5	13	6188	433	402	31
666	L : Housing Unit	1st	STAIR	Exit Sign Combo LED	2	3	8760	No Action - Existing Efficient/LED Fixture	2	3	8760	53	53	0
667	L : Housing Unit	1st	STAIR	Step Light CFL 13W Screw In	4	13	0	No Action - Emergency Use Only	4	13	0	0	0	0
668	L : Housing Unit	Upper Level	UPPER CELLS 1-16	2' Vanity 2L 17W T8	16	33	2912	RT, 2' 7W DE LED 2L	16	14	2912	1,538	652	885
669	L : Housing Unit	1st	TV ROOM	4' Wrap BP 2L 32W T8	4	59	6188	RT, 4' 10.5W DE LED 2L	4	21	6188	1,460	520	941
670	L : Housing Unit	1st	MECHANICAL	4' Industrial LED 18W T8 ULB 1L	2	18	520	RT, 4' 10.5W DE LED 1L	2	11	520	19	11	8
671	L : Housing Unit	1st	LOWER/UPPER HALLWAY	Exit Sign Combo LED	8	3	8760	No Action - Existing Efficient/LED Fixture	8	3	8760	210	210	0
672	L : Housing Unit	1st	LOWER/UPPER HALLWAY	12" Rec Sq. LED 14W A	16	14	6188	LED 13W A19 Replacement	16	13	6188	1,386	1,287	99
673	L : Housing Unit	1st	LOWER/UPPER HALLWAY	12" Rec Sq. LED 14W A	16	14	6188	LED 13W A19 Replacement	16	13	6188	1,386	1,287	99
674	L : Housing Unit	1st	STORAGE	Drum LED 14W A	1	14	1000	LED 9W A19 Replacement	1	10	1000	14	10	5
675	L : Housing Unit	1st	SHOWER	1x4 Prism Rec 2L 32W T8	1	59	6188	RT, 4' 10.5W DE LED 2L	1	21	6188	365	130	235
676	L : Housing Unit	1st	SHOWER	Canopy LED 14W A	2	14	6188	LED 13W A19 Replacement	2	13	6188	173	161	12
677	L : Housing Unit	1st	JANITOR	Drum LED 14W A 2L	1	28	1000	LED 9W A19 Replacement 2L	1	19	1000	28	19	9

678	L : Housing Unit	1st	STAIR	12" Rec Sq. LED 14W A	3	14	6188	LED 13W A19 Replacement	3	13	6188	260	241	19
679	L : Housing Unit	1st	STAIR	Step Light CFL 13W Screw In	3	13	0	No Action - Emergency Use Only	3	13	0	0	0	0
680	L : Housing Unit	Exterior	EXTERIOR	Wall Pack LED 45W Corn Cob	2	45	4380	Wall Pack LED FT TWX 5 kLm PC	2	36	4380	394	315	79
681	L : Housing Unit	Exterior	DOORWAY REMOTE HEAD	Emergency Fixture	2	0	0	No Action - Emergency Use Only	2	0	0	0	0	0
682	L : Housing Unit	Exterior	DISCONNECTED FLOOD	Flood Quartz 500W	1	500	0	No Action - Not In Use	1	500	0	0	0	0
683	L : Housing Unit	Exterior	DISCONNECTED FLOOD	Flood Quartz 500W	1	500	0	No Action - Not In Use	1	500	0	0	0	0
684	3A : Medical Ward	1st	VESTIBULE	4" Rec Sq. CFL 23W Screw In	1	23	8760	LED 13W A19 Replacement	1	13	8760	201	114	88
685	3A : Medical Ward	1st	OFFICE	4' Wrap BP 2L 32W T8	1	59	3640	RT, 4' 10.5W DE LED 2L	1	21	3640	215	76	138
686	3A : Medical Ward	1st	NURSE	4' Wrap BP 2L 32W T8	3	59	3640	RT, 4' 10.5W DE LED 2L	3	21	3640	644	229	415
687	3A : Medical Ward	1st	STORAGE	4' Wrap BP 2L 32W T8	2	59	1000	RT, 4' 10.5W DE LED 2L	2	21	1000	118	42	76
688	3A : Medical Ward	1st	STORAGE	4" Rec Sq. LED 27W Corn Cob	3	27	1000	LED 20W A21 Replacement	3	20	1000	81	60	21
689	3A : Medical Ward	1st	TV ROOM	4' Wrap BP 2L 32W T8	5	59	3640	RT, 4' 10.5W DE LED 2L	5	21	3640	1,074	382	692
690	3A : Medical Ward	1st	TV ROOM	4' Wrap BP 2L 32W T8	1	59	3640	RT, 4' 10.5W DE LED 2L	1	21	3640	215	76	138
691	3A : Medical Ward	1st	STAFF RESTROOM	2' Vanity 2L 17W T8	1	33	1456	RT, 2' 7W DE LED 2L	1	14	1456	48	20	28
692	3A : Medical Ward	1st	CENTER BED AREA	4' Wrap LED 18W T8 ULB 2L	12	36	3640	RT, 4' 10.5W DE LED 2L	12	21	3640	1,572	917	655
693	3A : Medical Ward	1st	CENTER BED AREA	2' Wrap 2L T8	8	33	3640	RT, 2' 7W DE LED 2L	8	14	3640	961	408	553
694	3A : Medical Ward	1st	CENTER BED AREA	4" Rec Sq. CFL 23W Screw In	2	23	3640	LED 13W A19 Replacement	2	13	3640	167	95	73
695	3A : Medical Ward	1st	CENTER BED AREA	Exit Sign Combo LED	1	3	8760	No Action - Existing Efficient/LED Fixture	1	3	8760	26	26	0
696	3A : Medical Ward	1st	DETOX WARD	4' Wrap BP 2L 32W T8	2	59	3640	RT, 4' 10.5W DE LED 2L	2	21	3640	430	153	277
697	3A : Medical Ward	1st	DETOX WARD	4' Wrap BP 2L 32W T8	6	59	3640	RT, 4' 10.5W DE LED 2L	6	21	3640	1,289	459	830
698	3A : Medical Ward	1st	BED AREA 10-19	4' Wrap LED 18W T8 ULB 2L	5	36	3640	RT, 4' 10.5W DE LED 2L	5	21	3640	655	382	273
699	3A : Medical Ward	1st	BED AREA 10-19	4' Wrap BP 2L 32W T8	5	59	3640	RT, 4' 10.5W DE LED 2L	5	21	3640	1,074	382	692
700	3A : Medical Ward	1st	BED AREA 10-19	2' Wrap 2L T8	10	33	3640	RT, 2' 7W DE LED 2L	10	14	3640	1,201	510	692
701	3A : Medical Ward	1st	RESTROOM	2' Vanity 2L 17W T8	1	33	1456	RT, 2' 7W DE LED 2L	1	14	1456	48	20	28
702	3A : Medical Ward	1st	RESTROOM	2' Vanity 2L 17W T8	1	33	1456	RT, 2' 7W DE LED 2L	1	14	1456	48	20	28
703	3A : Medical Ward	1st	LARGE GANG RESTROOM	4' Vanity BP 2L 32W T8	3	59	6188	RT, 4' 10.5W DE LED 2L	3	21	6188	1,095	390	705
704	3A : Medical Ward	1st	LARGE GANG RESTROOM	2' Vanity 2L 17W T8	1	33	6188	RT, 2' 7W DE LED 2L	1	14	6188	204	87	118
705	3A : Medical Ward	1st	LARGE GANG RESTROOM	4' Vaportight BP 2L 32W T8	1	59	6188	RT, 4' 10.5W DE LED 2L	1	21	6188	365	130	235
706	3A : Medical Ward	1st	LARGE GANG RESTROOM	4' Vaportight LED 18W T8 ULA 2L	2	42	6188	RT, 4' 10.5W DE LED 2L	2	21	6188	520	260	260
707	3A : Medical Ward	1st	LARGE GANG RESTROOM	Exit Sign Combo LED	2	3	8760	No Action - Existing Efficient/LED Fixture	2	3	8760	53	53	0
708	3A : Medical Ward	1st	SHOWER	15" Rec Sq. LED 14W A TP	4	14	6188	LED 13W A19 Replacement TP	4	13	6188	347	322	25
709	3A : Medical Ward	1st	JANITOR	Wall Pack LED 14W A	1	14	1000	LED 9W A19 Replacement	1	10	1000	14	10	5
710	3A : Medical Ward	1st	HALLWAY	2x2 Prism Rec 2L 32W U6 T8	2	59	8760	RT, 2' 7W DE LED 2L, 2x2 Refl Kit	2	14	8760	1,034	245	788
711	3A : Medical Ward	1st	HALLWAY	Exit Sign Combo LED	1	3	8760	No Action - Existing Efficient/LED Fixture	1	3	8760	26	26	0
712	3A : Medical Ward	1st	THERAPY ROOM	4' Wrap BP 2L 32W T8	4	59	3640	RT, 4' 10.5W DE LED 2L	4	21	3640	859	306	553
713	3A : Medical Ward	1st	THERAPY ROOM	Cylinder CFL 23W Screw In	1	23	3640	LED 13W A19 Replacement	1	13	3640	84	47	36
714	3A : Medical Ward	1st	THERAPY ROOM	2' Wrap 2L T8	3	33	3640	RT, 2' 7W DE LED 2L	3	14	3640	360	153	207
715	3A : Medical Ward	1st	TOXIC VESTIBULE/CLOSET	4' Wrap BP 2L 32W T8	1	59	1000	RT, 4' 10.5W DE LED 2L	1	21	1000	59	21	38
716	3A : Medical Ward	Exterior	DOORWAY REMOTE HEAD	Emergency Fixture	4	0	0	No Action - Emergency Use Only	4	0	0	0	0	0
717	3A : Medical Ward	Exterior	EXTERIOR	Wall Pack HPS 70W	1	95	4380	Wall Pack LED FT TWX 3.2 kLm PC	1	22	4380	416	96	320
718	3A : Medical Ward	Exterior	REAR DOCK	15" Rec Sq. HPS 70W	2	95	4380	LED 20W A21 Retrofit	2	20	4380	832	175	657
719	3A : Medical Ward	1st	REAR DOCK	Step Light CFL 13W Screw In	1	13	0	No Action - Emergency Use Only	1	13	0	0	0	0
720	3A : Medical Ward	1st	MECHANICAL	8' Industrial LED 18W T8 ULB 2L	4	36	520	RT, 4' 10.5W DE LED 2L	4	21	520	75	44	31
721	3A : Medical Ward	1st	MECHANICAL	Exit Sign Combo LED	1	3	8760	No Action - Existing Efficient/LED Fixture	1	3	8760	26	26	0
722	3A : Medical Ward	Exterior	EXTERIOR	Wall Pack HPS 150W	1	188	4380	Wall Pack LED FT TWX 5 kLm PC	1	36	4380	823	158	666
723	3A : Medical Ward	1st	MECHANICAL	RLM CFL 23W Screw In	3	23	0	No Action - Emergency Use Only	3	23	0	0	0	0
724	G : Housing Unit	1st	VESTIBULE	1x4 Prism Rec 2L 32W T8	1	59	8760	RT, 4' 10.5W DE LED 2L	1	21	8760	517	184	333
725	G : Housing Unit	1st	VESTIBULE	Exit Sign Combo LED	1	3	8760	No Action - Existing Efficient/LED Fixture	1	3	8760	26	26	0
726	G : Housing Unit	1st	HALLWAY	1x4 Prism Rec 2L 32W T8	3	59	8760	RT, 4' 10.5W DE LED 2L	3	21	8760	1,551	552	999
727	G : Housing Unit	1st	HALLWAY	Exit Sign Combo LED	1	3	8760	No Action - Existing Efficient/LED Fixture	1	3	8760	26	26	0
728	G : Housing Unit	1st	CONTROL	2x2 Flat Panel Rec LED 30W	2	30	364	No Action - Existing Efficient/LED Fixture	2	30	364	22	22	0
729	G : Housing Unit	1st	CONTROL	Cylinder Hal 90W PAR38	2	90	364	LED 13W PAR38 Replacement	2	13	364	66	9	56
730	G : Housing Unit	1st	CONTROL	Flood Inc 65W R30	2	65	364	LED 10W PAR30 Replacement	2	10	364	47	7	40
731	G : Housing Unit	1st	CONTROL	Emergency Fixture	1	0	0	No Action - Emergency Use Only	1	0	0	0	0	0
732	G : Housing Unit	1st	RESTROOM	Drum LED 14W A 2L	1	28	1456	LED 9W A19 Replacement 2L	1	19	1456	41	28	13
733	G : Housing Unit	1st	OPEN POD	2x2 Flat Panel Rec LED 50W	10	50	6188	No Action - Existing Efficient/LED Fixture	10	50	6188	3,094	3,094	0
734	G : Housing Unit	1st	OPEN POD	2x2 Flat Panel Rec LED 50W	2	50	8760	No Action - Existing Efficient/LED Fixture	2	50	8760	876	876	0
735	G : Housing Unit	1st	OPEN POD	Exit Sign CFL 9W 2L TP	4	20	8760	Exit Sign LED Combo TP	4	6	8760	701	210	491
736	G : Housing Unit	1st	OPEN POD	Emergency Fixture	3	0	0	No Action - Emergency Use Only	3	0	0	0	0	0
737	G : Housing Unit	1st	BEDS 1-62	2X4 Prism Rec 4L 32W T8 Delamped to 2L	62	59	6188	RT, 4' 10.5W DE LED 2L	62	21	6188	22,636	8,057	14,579
738	G : Housing Unit	1st	SHOWERS 1+2	2X4 Prism Rec 4L 32W T8	6	112	6188	RT, 4' 10.5W DE LED 4L	6	42	6188	4,158	1,559	2,599
739	G : Housing Unit	1st	OFFICE 1	2X4 Prism Rec 4L 32W T8	2	112	3640	RT, 4' 10.5W DE LED 2L, 2x4 Refl Kit	2	21	3640	815	153	662
740	G : Housing Unit	1st	OPEN POD	2x2 Flat Panel Rec LED 50W	10	50	6188	No Action - Existing Efficient/LED Fixture	10	50	6188	3,094	3,094	0
741	G : Housing Unit	1st	OPEN POD	2x2 Flat Panel Rec LED 50W	2	50	8760	No Action - Existing Efficient/LED Fixture	2	50	8760	876	876	0
742	G : Housing Unit	1st	OPEN POD	Exit Sign CFL 9W 2L TP	4	20	8760	Exit Sign LED Combo TP	4	6	8760	701	210	491
743	G : Housing Unit	1st	OPEN POD	Emergency Fixture	3	0	0	No Action - Emergency Use Only	3	0	0	0	0	0
744	G : Housing Unit	1st	BEDS 1-62	2X4 Prism Rec 4L 32W T8 Delamped to 2L	62	59	6188	RT, 4' 10.5W DE LED 2L	62	21	6188	22,636	8,057	14,579
745	G : Housing Unit	1st	SHOWERS 1+2	2X4 Prism Rec 4L 32W T8	6	112	6188	RT, 4' 10.5W DE LED 4L	6	42	6188	4,158	1,559	2,599
746	G : Housing Unit	1st	OFFICE 1	2X4 Prism Rec 4L 32W T8	2	112	3640	RT, 4' 10.5W DE LED 2L, 2x4 Refl Kit	2	21	3640	815	153	662
747	G : Housing Unit	1st	OFFICE 2	2X4 Prism Rec 4L 32W T8	2	112	3640	RT, 4' 10.5W DE LED 2L, 2x4 Refl Kit	2	21	3640	815	153	662
748	G : Housing Unit	1st	STORAGE GB	2X4 Prism Rec LED 18W T8 ULB 4L	1	72	1000	RT, 4' 10.5W DE LED 2L, 2x4 Refl Kit	1	21	1000	72	21	51
749	G : Housing Unit	1st	STORAGE GB	2X4 Prism Rec 4L 32W T8	1	112	1000	RT, 4' 10.5W DE LED 2L, 2x4 Refl Kit	1	21	1000	112	21	91
750	G : Housing Unit	1st	STORAGE GA	2X4 Prism Rec 4L 32W T8 Delamped to 2L	2	59	1000	RT, 4' 10.5W DE LED 2L	2	21	1000	118	42	76
751	G : Housing Unit	1st	STORAGE	2X4 Prism Rec LED 18W T8 ULB 4L Delampe	2	36	1000	RT, 4' 10.5W DE LED 2L	2	21	1000	72	42	30
752	G : Housing Unit	Exterior	FRONT	Canopy MH 70W	1	95	4380	Wall Pack LED FT TWX 3.2 kLm PC	1	22	4380	416	96	320
753	G : Housing Unit	Exterior	REAR STAIR	Canopy MH 70W	2	95	4380	Wall Pack LED FT TWX 3.2 kLm PC	2	22	4380	832	193	639
754	G : Housing Unit	Exterior	REAR STAIR	Canopy MH 70W	2	95	4380	Wall Pack LED FT TWX 3.2 kLm PC	2	22	4380	832	193	639
755	G : Housing Unit	Exterior	REAR	Wall Pack MH 250W	2	295	4380	Wall Pack LED FT TWX 6.9 kLm PC	2	54	4380	2,584	473	2,111
756	G : Housing Unit	1st	MECHANICAL	8' Industrial LED 18W T8 ULB 2L	2	36	520	RT, 4' 10.5W DE LED 2L	2	21	520	37	22	16
757	G : Housing Unit	1st	MECHANICAL	4' Industrial LED 18W T8 ULB 2L	2	36	520	RT, 4' 10.5W DE LED 2L	2	21	520	37	22	16
758	G : Housing Unit	1st	MECHANICAL	4' Industrial LED 18W T8 ULB 2L	1	36	8760	RT, 4' 10.5W DE LED 2L	1	21	8760	315	184	131
759	G : Housing Unit	1st	MECHANICAL	Exit Combo CFL 9W 2L	1	20	8760	Exit Sign LED Combo	1	6	8760	175	53	123
760	G : Housing Unit	1st	ELECTRICAL	4' Industrial LED 18W T8 ULB 2L	2	36	520	RT, 4' 10.5W DE LED 2L	2	21	520	37	22	16
761	G : Housing Unit	1st	UPPER	4' Industrial LED 18W T8 ULB 2L	4	36	520	RT, 4' 10.5W DE LED 2L	4	21	520	75	44	31
762	G : Housing Unit	1st	UPPER	4' Industrial LED 18W T8 ULB 2L	1	36	8760	RT, 4' 10.5W DE LED 2L	1	21	8760	315	184	131

763	H : Housing Unit	Exterior	FRONT	Flood LED 80W Corn Cob	5	80	4380	Flood LED 16.5 kLm SF PC	5	133	4380	1,752	2,913	-1,161
764	H : Housing Unit	Exterior	LEFT	Flood LED 80W Corn Cob	9	80	4380	Flood LED 16.5 kLm SF PC	9	133	4380	3,154	5,243	-2,089
765	H : Housing Unit	Exterior	LEFT	Wall Pack CFL 32W 4P	1	34	4380	Vandal Proof LED 1.2 kLm Round EYE	1	28	4380	149	123	26
766	H : Housing Unit	1st	MECHANICAL 1+2	4' Industrial LED 18W T8 ULB 2L	4	36	520	RT, 4' 10.5W DE LED 2L	4	21	520	75	44	31
767	H : Housing Unit	Exterior	REAR	Flood LED 80W Corn Cob	7	80	4380	Flood LED 16.5 kLm SF PC	7	133	4380	2,453	4,078	-1,625
768	H : Housing Unit	Exterior	REAR DOORWAY	Wall Pack CFL 32W 4P	1	34	4380	Vandal Proof LED 1.2 kLm Round EYE	1	28	4380	149	123	26
769	H : Housing Unit	Exterior	RIGHT	Flood LED 80W Corn Cob	9	80	4380	Flood LED 16.5 kLm SF PC	9	133	4380	3,154	5,243	-2,089
770	H : Housing Unit	Exterior	RIGHT	Wall Pack MH 70W	1	95	4380	Vandal Proof LED 1.2 kLm Round EYE	1	28	4380	416	123	293
771	H : Housing Unit	1st	MECHANICAL	4' Industrial LED 18W T8 ULB 2L	4	36	520	RT, 4' 10.5W DE LED 2L	4	21	520	75	44	31
772	H : Housing Unit	1st	VESTIBULE	2X4 Prism Rec 2L 32W T8	2	59	8760	RT, 4' 10.5W DE LED 2L	2	21	8760	1,034	368	666
773	H : Housing Unit	1st	OFFICE	2X4 Par Rec 3L 32W T8	2	89	3640	RT, 4' 10.5W DE LED 3L	2	32	3640	648	229	419
774	H : Housing Unit	1st	DAY ROOM	2X4 Prism Sur 3L 32W T8 TP	19	89	6188	RT, 4' 10.5W DE LED 3L TP	19	32	6188	10,464	3,704	6,760
775	H : Housing Unit	1st	DAY ROOM	2x2 Flat Panel Rec LED 30W	22	30	6188	No Action - Existing Efficient/LED Fixture	22	30	6188	4,084	4,084	0
776	H : Housing Unit	1st	DAY ROOM	2x2 Prism Rec 3L FT40 TP	13	102	6188	RT, LED 17W 4P 2G11 3L TP	13	51	6188	8,205	4,103	4,103
777	H : Housing Unit	1st	DAY ROOM	2x2 Prism Rec 3L FT40 TP	7	102	8760	RT, LED 17W 4P 2G11 3L TP	7	51	8760	6,255	3,127	3,127
778	H : Housing Unit	Upper Level	UPPER OFFICE	2X4 Par Rec 3L 32W T8	2	89	3640	RT, 4' 10.5W DE LED 3L	2	32	3640	648	229	419
779	H : Housing Unit	Lower Level	LOWER OFFICE	2X4 Prism Rec 3L 32W T8	2	89	3640	RT, 4' 10.5W DE LED 2L, 2x4 Refl Kit	2	21	3640	648	153	495
780	H : Housing Unit	1st	SHOWERS 1-8	Vandal Proof CFL 26W 4P 2L	16	50	6188	RT, LED 8W 2P G24D/Q H 2L TP	16	16	6188	4,950	1,584	3,366
781	H : Housing Unit	1st	CELLS 1-64	2X4 Prism Sur 3L 32W T8 TP	64	89	2912	RT, 4' 10.5W DE LED 3L TP	64	32	2912	16,587	5,871	10,716
782	H : Housing Unit	1st	CELLS 1-64	Night Light CFL 9W 2P	64	11	5848	RT, LED 4W 2P GX23 H	64	4	5848	4,117	1,497	2,620
783	H : Housing Unit	Upper Level	UPPER MECHANICAL	4' Industrial BP 2L 32W T8	5	59	520	RT, 4' 10.5W DE LED 2L	5	21	520	153	55	99
784	H : Housing Unit	1st	ELECTRICAL	4' Industrial LED 18W T8 ULB 2L	2	36	520	RT, 4' 10.5W DE LED 2L	2	21	520	37	22	16
785	H : Housing Unit	1st	HOT WATER	4' Industrial BP 2L 32W T8	3	59	520	RT, 4' 10.5W DE LED 2L	3	21	520	92	33	59
786	H : Housing Unit	1st	DUCT ROOM 1-4	4' Industrial BP 2L 32W T8	32	59	520	RT, 4' 10.5W DE LED 2L	32	21	520	982	349	632
787	H : Housing Unit	1st	DAY ROOM	2X4 Prism Sur 3L 32W T8 TP	19	89	6188	RT, 4' 10.5W DE LED 3L TP	19	32	6188	10,464	3,704	6,760
788	H : Housing Unit	1st	DAY ROOM	2x2 Flat Panel Rec LED 30W	22	30	6188	No Action - Existing Efficient/LED Fixture	22	30	6188	4,084	4,084	0
789	H : Housing Unit	1st	DAY ROOM	2x2 Prism Rec 3L FT40 TP	13	102	6188	RT, LED 17W 4P 2G11 3L TP	13	51	6188	8,205	4,103	4,103
790	H : Housing Unit	1st	DAY ROOM	2x2 Prism Rec 3L FT40 TP	7	102	8760	RT, LED 17W 4P 2G11 3L TP	7	51	8760	6,255	3,127	3,127
791	H : Housing Unit	Upper Level	UPPER OFFICE	2X4 Par Rec 3L 32W T8	2	89	3640	RT, 4' 10.5W DE LED 3L	2	32	3640	648	229	419
792	H : Housing Unit	Lower Level	LOWER OFFICE	2X4 Prism Rec 3L 32W T8	2	89	3640	RT, 4' 10.5W DE LED 2L, 2x4 Refl Kit	2	21	3640	648	153	495
793	H : Housing Unit	1st	SHOWERS 1-8	Vandal Proof CFL 26W 4P 2L	16	50	6188	RT, LED 8W 2P G24D/Q H 2L TP	16	16	6188	4,950	1,584	3,366
794	H : Housing Unit	1st	CELLS 1-64	2X4 Prism Sur 3L 32W T8 TP	64	89	2912	RT, 4' 10.5W DE LED 3L TP	64	32	2912	16,587	5,871	10,716
795	H : Housing Unit	1st	CELLS 1-64	Night Light CFL 9W 2P	64	11	5848	RT, LED 4W 2P GX23 H	64	4	5848	4,117	1,497	2,620
796	H : Housing Unit	Upper Level	UPPER MECHANICAL	4' Industrial BP 2L 32W T8	5	59	520	RT, 4' 10.5W DE LED 2L	5	21	520	153	55	99
797	H : Housing Unit	1st	ELECTRICAL	4' Industrial LED 18W T8 ULB 2L	2	36	520	RT, 4' 10.5W DE LED 2L	2	21	520	37	22	16
798	H : Housing Unit	1st	HOT WATER	4' Industrial BP 2L 32W T8	3	59	520	RT, 4' 10.5W DE LED 2L	3	21	520	92	33	59
799	H : Housing Unit	1st	VESTIBULE HALLWAY	2X4 Prism Rec 2L 32W T8	2	59	8760	RT, 4' 10.5W DE LED 2L	2	21	8760	1,034	368	666
800	H : Housing Unit	1st	OLD CONTROL ROOM/OFFICE	12" Rec Sq. CFL 26W 4P 2L Dim	6	50	3640	2x2 Flat Panel Rec LED 2500 Lm FA 0-10V Dim	6	20	3640	1,092	437	655
801	H : Housing Unit	1st	STAFF RESTROOM	4' Wall Bracket BP 2L 32W T8 TP	1	59	1456	RT, 4' 10.5W DE LED 2L TP	1	21	1456	86	31	55
802	N : Housing Unit	Exterior	FRONT	Flood LED 80W Corn Cob	5	80	4380	Flood LED 16.5 kLm SF PC	5	133	4380	1,752	2,913	-1,161
803	N : Housing Unit	Exterior	LEFT	Flood LED 80W Corn Cob	9	80	4380	Flood LED 16.5 kLm SF PC	9	133	4380	3,154	5,243	-2,089
804	N : Housing Unit	Exterior	LEFT	Wall Pack CFL 32W 4P	1	34	4380	Vandal Proof LED 1.2 kLm Round EYE	1	28	4380	149	123	26
805	N : Housing Unit	1st	MECHANICAL 1+2	4' Industrial LED 18W T8 ULB 2L	4	36	520	RT, 4' 10.5W DE LED 2L	4	21	520	75	44	31
806	N : Housing Unit	Exterior	REAR	Flood LED 80W Corn Cob	7	80	4380	Flood LED 16.5 kLm SF PC	7	133	4380	2,453	4,078	-1,625
807	N : Housing Unit	Exterior	REAR	Wall Pack CFL 32W 4P	1	34	4380	Vandal Proof LED 1.2 kLm Round EYE	1	28	4380	149	123	26
808	N : Housing Unit	Exterior	RIGHT	Flood LED 80W Corn Cob	9	80	4380	Flood LED 16.5 kLm SF PC	9	133	4380	3,154	5,243	-2,089
809	N : Housing Unit	Exterior	RIGHT	Wall Pack MH 70W	1	95	4380	Vandal Proof LED 1.2 kLm Round EYE	1	28	4380	416	123	293
810	N : Housing Unit	1st	MECHANICAL	4' Industrial LED 18W T8 ULB 2L	4	36	520	RT, 4' 10.5W DE LED 2L	4	21	520	75	44	31
811	N : Housing Unit	1st	VESTIBULE	2X4 Prism Rec 2L 32W T8	2	59	8760	RT, 4' 10.5W DE LED 2L	2	21	8760	1,034	368	666
812	N : Housing Unit	1st	OFFICE	2X4 Par Rec 3L 32W T8	2	89	3640	RT, 4' 10.5W DE LED 3L	2	32	3640	648	229	419
813	N : Housing Unit	1st	DAY ROOM	2X4 Prism Sur 3L 32W T8 TP	19	89	6188	RT, 4' 10.5W DE LED 3L TP	19	32	6188	10,464	3,704	6,760
814	N : Housing Unit	1st	DAY ROOM	2x2 Flat Panel Rec LED 30W	22	30	6188	No Action - Existing Efficient/LED Fixture	22	30	6188	4,084	4,084	0
815	N : Housing Unit	1st	DAY ROOM	2x2 Prism Rec 3L FT40 TP	13	102	6188	RT, LED 17W 4P 2G11 3L TP	13	51	6188	8,205	4,103	4,103
816	N : Housing Unit	1st	DAY ROOM	2x2 Prism Rec 3L FT40 TP	7	102	8760	RT, LED 17W 4P 2G11 3L TP	7	51	8760	6,255	3,127	3,127
817	N : Housing Unit	Upper Level	UPPER OFFICE	2X4 Par Rec 3L 32W T8	2	89	3640	RT, 4' 10.5W DE LED 3L	2	32	3640	648	229	419
818	N : Housing Unit	Lower Level	LOWER OFFICE	2X4 Prism Rec 3L 32W T8	2	89	3640	RT, 4' 10.5W DE LED 2L, 2x4 Refl Kit	2	21	3640	648	153	495
819	N : Housing Unit	1st	SHOWERS 1-8	2X2 Prism Sur 2L T8 TP	16	33	6188	RT, 2' 7W DE LED 2L TP	16	14	6188	3,267	1,386	1,881
820	N : Housing Unit	1st	CELLS 1-64	2X4 Prism Sur 3L 32W T8 TP	64	89	2912	RT, 4' 10.5W DE LED 3L TP	64	32	2912	16,587	5,871	10,716
821	N : Housing Unit	1st	CELLS 1-64	Night Light CFL 9W 2P	64	11	5848	RT, LED 4W 2P GX23 H	64	4	5848	4,117	1,497	2,620
822	N : Housing Unit	Upper Level	UPPER MECHANICAL	4' Industrial BP 2L 32W T8	5	59	520	RT, 4' 10.5W DE LED 2L	5	21	520	153	55	99
823	N : Housing Unit	1st	ELECTRICAL	4' Industrial LED 18W T8 ULB 2L	2	36	520	RT, 4' 10.5W DE LED 2L	2	21	520	37	22	16
824	N : Housing Unit	1st	HOT WATER	4' Industrial BP 2L 32W T8	3	59	520	RT, 4' 10.5W DE LED 2L	3	21	520	92	33	59
825	N : Housing Unit	1st	DUCT ROOM 1-4	4' Industrial BP 2L 32W T8	32	59	520	RT, 4' 10.5W DE LED 2L	32	21	520	982	349	632
826	N : Housing Unit	1st	DAY ROOM	2X4 Prism Sur 3L 32W T8 TP	19	89	6188	RT, 4' 10.5W DE LED 3L TP	19	32	6188	10,464	3,704	6,760
827	N : Housing Unit	1st	DAY ROOM	2x2 Flat Panel Rec LED 30W	22	30	6188	No Action - Existing Efficient/LED Fixture	22	30	6188	4,084	4,084	0
828	N : Housing Unit	1st	DAY ROOM	2x2 Prism Rec 3L FT40 TP	13	102	6188	RT, LED 17W 4P 2G11 3L TP	13	51	6188	8,205	4,103	4,103
829	N : Housing Unit	1st	DAY ROOM	2x2 Prism Rec 3L FT40 TP	7	102	8760	RT, LED 17W 4P 2G11 3L TP	7	51	8760	6,255	3,127	3,127
830	N : Housing Unit	Upper Level	UPPER OFFICE	2X4 Par Rec 3L 32W T8	2	89	3640	RT, 4' 10.5W DE LED 3L	2	32	3640	648	229	419
831	N : Housing Unit	Lower Level	LOWER OFFICE	2X4 Prism Rec 3L 32W T8	2	89	3640	RT, 4' 10.5W DE LED 2L, 2x4 Refl Kit	2	21	3640	648	153	495
832	N : Housing Unit	1st	SHOWERS 1-8	2X2 Prism Sur 2L T8 TP	16	33	6188	RT, 2' 7W DE LED 2L TP	16	14	6188	3,267	1,386	1,881
833	N : Housing Unit	1st	CELLS 1-64	2X4 Prism Sur 3L 32W T8 TP	64	89	2912	RT, 4' 10.5W DE LED 3L TP	64	32	2912	16,587	5,871	10,716
834	N : Housing Unit	1st	CELLS 1-64	Night Light CFL 9W 2P	64	11	5848	RT, LED 4W 2P GX23 H	64	4	5848	4,117	1,497	2,620
835	N : Housing Unit	Upper Level	UPPER MECHANICAL	4' Industrial BP 2L 32W T8	5	59	520	RT, 4' 10.5W DE LED 2L	5	21	520	153	55	99
836	N : Housing Unit	1st	ELECTRICAL	4' Industrial LED 18W T8 ULB 2L	2	36	520	RT, 4' 10.5W DE LED 2L	2	21	520	37	22	16
837	N : Housing Unit	1st	HOT WATER	4' Industrial BP 2L 32W T8	3	59	520	RT, 4' 10.5W DE LED 2L	3	21	520	92	33	59
838	N : Housing Unit	1st	VESTIBULE HALLWAY	2X4 Prism Rec 2L 32W T8	2	59	8760	RT, 4' 10.5W DE LED 2L	2	21	8760	1,034	368	666
839	N : Housing Unit	1st	OLD CONTROL ROOM/OFFICE	12" Rec Sq. CFL 26W 4P 2L Dim	6	50	3640	2x2 Flat Panel Rec LED 2500 Lm FA 0-10V Dim	6	20	3640	1,092	437	655
840	N : Housing Unit	1st	STAFF RESTROOM	4' Wall Bracket BP 2L 32W T8 TP	1	59	1456	RT, 4' 10.5W DE LED 2L TP	1	21	1456	86	31	55
841	Guard Shack	1st	GUARD SHACK	4' Wrap BP 2L 32W T8	1	59	364	RT, 4' 10.5W DE LED 2L	1	21	364	21	8	14
842	29 : CI	Exterior	LEFT	Wall Pack MH 150W	1	190	4380	Wall Pack LED FT TWX 5 kLm PC	1	36	4380	832	158	675
843	29 : CI	Exterior	FRONT	Wall Pack LED 45W Corn Cob	1	45	4380	Wall Pack LED FT TWX 5 kLm PC	1	36	4380	197	158	39
844	29 : CI	1st	OPEN SEWING	Exit Sign Combo LED	1	3	8760	No Action - Existing Efficient/LED Fixture	1	3	8760	26	26	0
845	29 : CI	1st	OPEN SEWING	8' Strip LED 18W T8 ULA 4L	49	84	1950	RT, 4' 10.5W DE LED 4L	49	42	1950	8,026	4,013	4,013
846	29 : CI	1st	OPEN SEWING	4' Strip LED 18W T8 ULB 2L	1	36	1950	RT, 4' 10.5W DE LED 2L	1	21	1950	70	41	29
847	29 : CI	1st	OFFICE	4' Industrial LED 18W T8 ULB 2L	2	36	3640	RT, 4' 10.5W DE LED 2L	2	21	3640	262	153	109

848	29 : CI	1st	STORAGE	8' Strip LED 18W T8 ULA 4L	4	84	1000	RT, 4' 10.5W DE LED 4L	4	42	1000	336	168	168
849	29 : CI	1st	STORAGE	4' Strip LED 18W T8 ULB 2L	2	36	1000	RT, 4' 10.5W DE LED 2L	2	21	1000	72	42	30
850	29 : CI	1st	STORAGE	8' Industrial LED 18W T8 ULA 4L	3	84	1000	RT, 4' 10.5W DE LED 4L	3	42	1000	252	126	126
851	29 : CI	1st	STORAGE	4' Strip LED 18W T8 ULA 2L	1	42	1000	RT, 4' 10.5W DE LED 2L	1	21	1000	42	21	21
852	29 : CI	1st	RESTROOM	4' Industrial LED 18W T8 ULA 2L	1	42	1456	RT, 4' 10.5W DE LED 2L	1	21	1456	61	31	31
853	29 : CI	1st	JANITOR	4' Strip LED 18W T8 ULA 2L	1	42	1000	RT, 4' 10.5W DE LED 2L	1	21	1000	42	21	21
854	29 : CI	1st	STAFF RESTROOM	4' Strip LED 18W T8 ULA 2L	1	42	1456	RT, 4' 10.5W DE LED 2L	1	21	1456	61	31	31
855	29 : CI	1st	PUMP ROOM	4' Industrial LED 18W T8 ULA 2L	1	42	520	RT, 4' 10.5W DE LED 2L	1	21	520	22	11	11
856	29 : CI	1st	ELECTRICAL	4' Industrial LED 18W T8 ULA 2L	1	42	520	RT, 4' 10.5W DE LED 2L	1	21	520	22	11	11
857	29 : CI	Exterior	REAR	Wall Pack MH 150W	3	190	4380	Wall Pack LED FT TWX 5 kLm PC	3	36	4380	2,497	473	2,024
858	29 : CI	Exterior	REAR	Wall Pack MH 150W	1	190	4380	Wall Pack LED FT TWX 5 kLm PC	1	36	4380	832	158	675
859	29 : CI	1st	STORAGE	High Bay LED 70W	9	70	1000	No Action - Existing Efficient/LED Fixture	9	70	1000	630	630	0
860	29 : CI	1st	STORAGE	Exit Sign Combo LED	1	3	8760	No Action - Existing Efficient/LED Fixture	1	3	8760	26	26	0
861	29 : CI	Exterior	EXTERIOR	Wall Pack MH 150W	4	190	4380	Wall Pack LED FT TWX 5 kLm PC	4	36	4380	3,329	631	2,698
862	F : Housing Unit	Exterior	REAR	Flood LED 80W Corn Cob	2	80	4380	Flood LED 16.5 kLm SF PC	2	133	4380	701	1,165	-464
863	F : Housing Unit	Exterior	REAR	Flood MH 250W	2	295	4380	Flood LED 16.5 kLm SF PC	2	133	4380	2,584	1,165	1,419
864	F : Housing Unit	Exterior	REAR	Wall Pack LED 45W Corn Cob	3	45	4380	Wall Pack LED FT TWX 5 kLm PC	3	36	4380	591	473	118
865	F : Housing Unit	Exterior	REAR	Flood MH 1000W	2	1080	4380	Flood LED 52 kLm SF PC	2	388	4380	9,461	3,399	6,062
866	F : Housing Unit	Exterior	REAR	Flood MH 250W	1	295	4380	Flood LED 16.5 kLm SF PC	1	133	4380	1,292	583	710
867	F : Housing Unit	Exterior	REAR	Flood MH 250W	1	295	4380	Flood LED 16.5 kLm SF PC	1	133	4380	1,292	583	710
868	26 : Education	Exterior	EXTERIOR	Wall Pack MH 150W	3	190	4380	Wall Pack LED FT TWX 5 kLm PC	3	36	4380	2,497	473	2,024
869	26 : Education	1st	MECHANICAL	2X4 Prism Rec 2L 32W T8	2	59	390	RT, 4' 10.5W DE LED 2L	2	21	390	46	16	30
870	26 : Education	1st	OFFICE 15	2X4 Prism Rec 4L 32W T8	1	112	3640	RT, 4' 10.5W DE LED 2L, 2x4 Refl Kit	1	21	3640	408	76	331
871	26 : Education	1st	OFFICE 16	2X4 Prism Rec 4L 32W T8	1	112	3640	RT, 4' 10.5W DE LED 2L, 2x4 Refl Kit	1	21	3640	408	76	331
872	26 : Education	1st	STORAGE 14	2X4 Prism Rec LED 18W T8 ULA 2L	2	42	1000	RT, 4' 10.5W DE LED 2L	2	21	1000	84	42	42
873	26 : Education	1st	INMATE RESTROOM	2X4 Prism Rec LED 18W T8 ULA 2L	1	42	6188	RT, 4' 10.5W DE LED 2L	1	21	6188	260	130	130
874	26 : Education	1st	HALLWAY	2X4 Prism Rec 4L 32W T8 Delamped to 2L	5	59	6570	RT, 4' 10.5W DE LED 2L	5	21	6570	1,938	690	1,248
875	26 : Education	1st	HALLWAY	2X4 Prism Rec LED 18W T8 ULA 4L Delampe	4	42	6570	RT, 4' 10.5W DE LED 2L	4	21	6570	1,104	552	552
876	26 : Education	1st	HALLWAY	Exit Sign Combo LED	2	3	8760	No Action - Existing Efficient/LED Fixture	2	3	8760	53	53	0
877	26 : Education	1st	HALLWAY	Exit Sign Combo LED	1	3	8760	No Action - Existing Efficient/LED Fixture	1	3	8760	26	26	0
878	26 : Education	1st	LIBRARY	2X4 Prism Rec 3L 32W T8	20	89	2600	RT, 4' 10.5W DE LED 2L, 2x4 Refl Kit	20	21	2600	4,628	1,092	3,536
879	26 : Education	1st	OFFICE	2x2 Par Rec 2L 32W U6 T8	2	59	3640	RT, 2' 7W DE LED 3L, 2x2 Refl Kit	2	21	3640	430	153	277
880	26 : Education	1st	OFFICE	2X4 Prism Rec 4L 32W T8	1	112	3640	RT, 4' 10.5W DE LED 2L, 2x4 Refl Kit	1	21	3640	408	76	331
881	26 : Education	1st	OFFICE	2X4 Prism Rec 4L 32W T8	1	112	3640	RT, 4' 10.5W DE LED 2L, 2x4 Refl Kit	1	21	3640	408	76	331
882	26 : Education	1st	OFFICE	2X4 Prism Rec 4L 32W T8	1	112	3640	RT, 4' 10.5W DE LED 2L, 2x4 Refl Kit	1	21	3640	408	76	331
883	26 : Education	1st	COMPUTER ROOM	2X4 Prism Rec 3L 32W T8	2	89	3640	RT, 4' 10.5W DE LED 2L, 2x4 Refl Kit	2	21	3640	648	153	495
884	26 : Education	1st	BOOK STORAGE 22	2X4 Prism Rec 3L 32W T8	5	89	1000	RT, 4' 10.5W DE LED 2L, 2x4 Refl Kit	5	21	1000	445	105	340
885	26 : Education	1st	WORK ROOM	2X4 Prism Rec 2L 32W T8	2	59	3640	RT, 4' 10.5W DE LED 2L	2	21	3640	430	153	277
886	26 : Education	1st	OFFICE 4	2X4 Prism Rec 4L 32W T8	1	112	3640	RT, 4' 10.5W DE LED 2L, 2x4 Refl Kit	1	21	3640	408	76	331
887	26 : Education	1st	OFFICE 3	2X4 Prism Rec 4L 32W T8	1	112	3640	RT, 4' 10.5W DE LED 2L, 2x4 Refl Kit	1	21	3640	408	76	331
888	26 : Education	1st	OFFICE	2X4 Prism Rec 4L 32W T8	1	112	3640	RT, 4' 10.5W DE LED 2L, 2x4 Refl Kit	1	21	3640	408	76	331
889	26 : Education	1st	CLOSET	2X4 Prism Rec 2L 32W T8	1	59	1000	RT, 4' 10.5W DE LED 2L	1	21	1000	59	21	38
890	26 : Education	1st	MENS RESTROOM	2X4 Prism Rec 2L 32W T8	1	59	1456	RT, 4' 10.5W DE LED 2L	1	21	1456	86	31	55
891	26 : Education	1st	WOMENS RESTROOM	2X4 Prism Rec 2L 32W T8	1	59	1456	RT, 4' 10.5W DE LED 2L	1	21	1456	86	31	55
892	26 : Education	1st	CLASSROOM 5	2X4 Prism Rec 4L 32W T8	8	112	2600	RT, 4' 10.5W DE LED 2L, 2x4 Refl Kit	8	21	2600	2,330	437	1,893
893	26 : Education	1st	CLASSROOM 6	2X4 Par Rec 4L 32W T8	8	112	2600	RT, 4' 10.5W DE LED 4L	8	42	2600	2,330	874	1,456
894	26 : Education	1st	CLASSROOM 7	2X4 Par Rec 4L 32W T8	6	112	2600	RT, 4' 10.5W DE LED 4L	6	42	2600	1,747	655	1,092
895	26 : Education	1st	CLASSROOM 7	2X4 Prism Rec LED 18W T8 ULB 4L	2	72	2600	RT, 4' 10.5W DE LED 2L, 2x4 Refl Kit	2	21	2600	374	109	265
896	26 : Education	1st	OFFICE	2x2 Flat Panel Rec LED 30W	1	30	3640	No Action - Existing Efficient/LED Fixture	1	30	3640	109	109	0
897	26 : Education	1st	CLASSROOM 8	2X4 Prism Rec 4L 32W T8	8	112	2600	RT, 4' 10.5W DE LED 2L, 2x4 Refl Kit	8	21	2600	2,330	437	1,893
898	26 : Education	1st	CLASSROOM 9	2X4 Prism Rec 4L 32W T8	8	112	2600	RT, 4' 10.5W DE LED 2L, 2x4 Refl Kit	8	21	2600	2,330	437	1,893
899	26 : Education	1st	STORAGE 10	2X4 Prism Rec 2L	2	72	1000	RT, 4' 10.5W DE LED 2L	2	21	1000	144	42	102
900	M : Housing Unit	Exterior	EXTERIOR	15" Rec Sq. LED 14W A	1	14	4380	LED 20W A21 Replacement	1	20	4380	61	88	-26
901	M : Housing Unit	Upper Level	VESTIBULE	2x2 Prism Sur 2L 32W U6 T8 TP	1	59	8760	RT, 4' 18W U SE LED 2L TP	1	36	8760	517	315	201
902	M : Housing Unit	Upper Level	CAGE	2' Wrap 2L T8	1	33	1000	RT, 2' 7W DE LED 2L	1	14	1000	33	14	19
903	M : Housing Unit	Upper Level	HALLWAY	2x2 Prism Rec LED 15W U6 T8 ULB 2L TP	1	30	8760	RT, 4' 18W U SE LED 2L TP	1	36	8760	263	315	-53
904	M : Housing Unit	Upper Level	OFFICE	4' Industrial BP 2L 32W T8	1	59	3640	RT, 4' 10.5W DE LED 2L	1	21	3640	215	76	138
905	M : Housing Unit	Upper Level	OFFICE	2X4 Prism Sur 2L 32W T8 TP	1	59	3640	RT, 4' 10.5W DE LED 2L TP	1	21	3640	215	76	138
906	M : Housing Unit	Upper Level	OFFICE	Exit Sign CFL 9W 2L	2	20	8760	Exit Sign LED BB	2	3	8760	350	53	298
907	M : Housing Unit	Upper Level	RESTROOM	3' Corner Mount 2L 25W T8 TP	1	46	1456	RT, 3' 12W DE LED 2L TP	1	24	1456	67	35	32
908	M : Housing Unit	Upper Level	CONTROL	2X4 Prism Rec 2L 32W T8	6	59	364	RT, 4' 10.5W DE LED 2L	6	21	364	129	46	83
909	M : Housing Unit	Upper Level	HALLWAY	2X4 Prism Sur 2L 32W T8 TP	1	59	8760	RT, 4' 10.5W DE LED 2L TP	1	21	8760	517	184	333
910	M : Housing Unit	Upper Level	CONFERENCE	4' Vaportight LED 18W T8 ULB 2L	6	36	1560	RT, 4' 10.5W DE LED 2L	6	21	1560	337	197	140
911	M : Housing Unit	Upper Level	SHOWERS 1-4	4' Corner Mount BP 2L 32W T8 TP	4	59	6188	RT, 4' 10.5W DE LED 2L TP	4	21	6188	1,460	520	941
912	M : Housing Unit	Upper Level	CELLS 1-30	4' Wall Bracket BP 2L 32W T8 TP	30	59	2912	RT, 4' 10.5W DE LED 2L TP	30	21	2912	5,154	1,835	3,320
913	M : Housing Unit	Upper Level	CELLS 1-30	Night Light CFL 7W 2P	30	10	5848	RT, LED 4W 2P GX23 H	30	4	5848	1,754	702	1,053
914	M : Housing Unit	Upper Level	HALLWAY	2X4 Prism Sur 2L 32W T8 TP	22	59	8760	RT, 4' 10.5W DE LED 2L TP	22	21	8760	11,370	4,047	7,323
915	M : Housing Unit	Upper Level	HALLWAY	Exit Sign CFL 9W 2L	2	20	8760	Exit Sign LED BB	2	3	8760	350	53	298
916	M : Housing Unit	Upper Level	STORAGE	4' Wrap LED 18W T8 ULB 1L	2	18	1000	RT, 4' 10.5W DE LED 1L	2	11	1000	36	21	15
917	M : Housing Unit	Upper Level	HALLWAY	4' Wrap LED 18W T8 ULB 1L	2	18	8760	RT, 4' 10.5W DE LED 1L	2	11	8760	315	184	131
918	M : Housing Unit	Upper Level	CHASE	Jelly Jar LED 14W A	8	14	1000	LED 9W A19 Replacement	8	10	1000	112	76	36
919	M : Housing Unit	Exterior	DISCONNECTED FLOOD	Flood Quartz 500W	2	500	0	No Action - Not In Use	2	500	0	0	0	0
920	Guard Shack	1st	GUARD SHACK	2' Strip LED 10W T8 ULB 1L	1	10	364	RT, 2' 7W DE LED 1L	1	7	364	4	3	1
921	14 : Activities	Exterior	EXTERIOR	15" Rec Sq. HPS 70W	2	95	4380	LED 20W A21 Retrofit	2	20	4380	832	175	657
922	14 : Activities	1st	VESTIBULE	2x2 Prism Rec 2L 32W U6 T8 AH	3	59	4914	RT, 2' 7W DE LED 2L, 2x2 Refl Kit	3	14	4914	870	206	663
923	14 : Activities	1st	LOBBY	2x2 Prism Rec 2L 32W U6 T8 AH	5	59	4914	RT, 2' 7W DE LED 2L, 2x2 Refl Kit	5	14	4914	1,450	344	1,106
924	14 : Activities	1st	LOBBY	2x2 Prism Rec 2L 32W U6 T8 AH	1	59	8760	RT, 2' 7W DE LED 2L, 2x2 Refl Kit	1	14	8760	517	123	394
925	14 : Activities	1st	LOBBY	4" Rec Can CFL 26W Screw In	4	26	0	No Action - Emergency Use Only	4	26	0	0	0	0
926	14 : Activities	1st	LOBBY	Exit Sign Combo LED	1	3	8760	No Action - Existing Efficient/LED Fixture	1	3	8760	26	26	0
927	14 : Activities	1st	OFFICE	6" Rec Can LED 14W A	16	14	4914	LED 13W A19 Replacement	16	13	4914	1,101	1,022	79
928	14 : Activities	1st	OFFICE	2x2 Par Rec 2L 32W U6 T8	6	59	4914	RT, 2' 7W DE LED 3L, 2x2 Refl Kit	6	21	4914	1,740	619	1,120
929	14 : Activities	1st	COMPUTER ROOM 106	1x4 Prism Rec 2L 32W T8	17	59	4914	RT, 4' 10.5W DE LED 2L	17	21	4914	4,929	1,754	3,174
930	14 : Activities	1st	OFFICE	2X4 Prism Rec 3L 32W T8	2	89	3640	RT, 4' 10.5W DE LED 2L, 2x4 Refl Kit	2	21	3640	648	153	495
931	14 : Activities	1st	CLASSROOM	2X4 Prism Rec LED 18W T8 ULB 2L	12	36	4914	RT, 4' 10.5W DE LED 2L	12	21	4914	2,123	1,238	885
932	14 : Activities	1st	CLASSROOM	Exit Sign Combo LED	1	3	8760	No Action - Existing Efficient/LED Fixture	1	3	8760	26	26	0

933	14 : Activities	1st	WOMENS RESTROOM	1x4 Prism Rec LED 18W T8 ULB 2L	3	36	1456	RT, 4' 10.5W DE LED 2L	3	21	1456	157	92	66
934	14 : Activities	1st	WOMENS RESTROOM	4' Vanity LED 18W T8 ULB 2L	1	36	1456	RT, 4' 10.5W DE LED 2L	1	21	1456	52	31	22
935	14 : Activities	1st	HALLWAY	2x2 Prism Rec 2L 32W U6 T8 AH	10	59	4914	RT, 2' 7W DE LED 2L, 2x2 Refl Kit	10	14	4914	2,899	688	2,211
936	14 : Activities	1st	HALLWAY	4" Rec Can CFL 26W Screw In	3	26	0	No Action - Emergency Use Only	3	26	0	0	0	0
937	14 : Activities	1st	CLASSROOM 101	2X4 Prism Rec LED 18W T8 ULB 2L	8	36	4914	RT, 4' 10.5W DE LED 2L	8	21	4914	1,415	826	590
938	14 : Activities	1st	CLASSROOM 101	Exit Sign Combo LED	1	3	8760	No Action - Existing Efficient/LED Fixture	1	3	8760	26	26	0
939	14 : Activities	1st	JANITOR	RLM LED 14W A	1	14	1000	LED 9W A19 Replacement	1	10	1000	14	10	5
940	14 : Activities	1st	STORAGE	4' Wrap LED 25W	1	25	1000	No Action - Existing Efficient/LED Fixture	1	25	1000	25	25	0
941	14 : Activities	1st	BUILDING TRADES CLASSROOM	2X4 Prism Rec LED 18W T8 ULA 2L	28	42	4914	RT, 4' 10.5W DE LED 2L	28	21	4914	5,779	2,889	2,889
942	14 : Activities	1st	BUILDING TRADES CLASSROOM	Exit Sign Combo LED	1	3	8760	No Action - Existing Efficient/LED Fixture	1	3	8760	26	26	0
943	14 : Activities	1st	BUILDING TRADES CLASSROOM	Wall Pack Inc 60W A	1	60	0	No Action - Emergency Use Only	1	60	0	0	0	0
944	14 : Activities	1st	OFFICE	4' Wrap LED 25W	1	25	3640	No Action - Existing Efficient/LED Fixture	1	25	3640	91	91	0
945	14 : Activities	1st	HALLWAY	2x2 Prism Rec 2L 32W U6 T8 AH	2	59	4914	RT, 2' 7W DE LED 2L, 2x2 Refl Kit	2	14	4914	580	138	442
946	14 : Activities	1st	HALLWAY	Exit Sign Combo LED	1	3	8760	No Action - Existing Efficient/LED Fixture	1	3	8760	26	26	0
947	14 : Activities	2nd	MECHANICAL LOFT	Jelly Jar LED 14W A	9	14	520	LED 9W A19 Replacement	9	10	520	66	44	21
948	14 : Activities	2nd	MECHANICAL LOFT	Jelly Jar LED 14W A	2	14	0	No Action - Emergency Use Only	2	14	0	0	0	0
949	14 : Activities	2nd	MECHANICAL LOFT	Jelly Jar LED 14W A	9	14	520	LED 9W A19 Replacement	9	10	520	66	44	21
950	14 : Activities	2nd	MECHANICAL LOFT	Jelly Jar LED 14W A	2	14	0	No Action - Emergency Use Only	2	14	0	0	0	0
951	14 : Activities	1st	MECHANICAL	2x2 Prism Rec 2L 32W U6 T8 AH	3	59	520	RT, 2' 7W DE LED 2L, 2x2 Refl Kit	3	14	520	92	22	70
952	14 : Activities	1st	MECHANICAL	8' Strip BP 2L 32W T8	1	59	520	RT, 4' 10.5W DE LED 2L	1	21	520	31	11	20
953	14 : Activities	1st	MENS RESTROOM	1x4 Prism Rec LED 18W T8 ULB 2L	2	36	1456	RT, 4' 10.5W DE LED 2L	2	21	1456	105	61	44
954	14 : Activities	1st	MENS RESTROOM	4' Vanity LED 18W T8 ULB 2L	1	36	1456	RT, 4' 10.5W DE LED 2L	1	21	1456	52	31	22
955	14 : Activities	1st	HALLWAY	2x2 Prism Rec 2L 32W U6 T8 AH	10	59	4914	RT, 2' 7W DE LED 2L, 2x2 Refl Kit	10	14	4914	2,899	688	2,211
956	14 : Activities	1st	HALLWAY	Exit Sign Combo LED	2	3	8760	No Action - Existing Efficient/LED Fixture	2	3	8760	53	53	0
957	14 : Activities	1st	HALLWAY	4" Rec Can CFL 26W Screw In	3	26	0	No Action - Emergency Use Only	3	26	0	0	0	0
958	14 : Activities	1st	JANITOR	RLM LED 14W A	1	14	1000	LED 9W A19 Replacement	1	10	1000	14	10	5
959	14 : Activities	1st	STORAGE	1x4 Prism Rec 2L 32W T8	1	59	1000	RT, 4' 10.5W DE LED 2L	1	21	1000	59	21	38
960	14 : Activities	1st	STORAGE	8' Schoolhouse SP 2L T8	3	94	1000	8' Wrap 4' 10.5W LED 4L	3	42	1000	282	126	156
961	14 : Activities	1st	OFFICE	2X4 Prism Rec 2L 32W T8	6	59	3640	RT, 4' 10.5W DE LED 2L	6	21	3640	1,289	459	830
962	14 : Activities	1st	LAUNDRY	4' Wrap LED 18W T8 ULB 2L	3	36	4914	RT, 4' 10.5W DE LED 2L	3	21	4914	531	310	221
963	14 : Activities	1st	LAUNDRY	Exit Sign Combo LED	1	3	8760	No Action - Existing Efficient/LED Fixture	1	3	8760	26	26	0
964	14 : Activities	1st	LAUNDRY	4' Wrap BP 2L 32W T8	3	59	4914	RT, 4' 10.5W DE LED 2L	3	21	4914	870	310	560
965	14 : Activities	1st	LAUNDRY	8' Schoolhouse HO 2L	13	207	4914	8' Wrap 4' 18.5W LED 4L	13	74	4914	13,224	4,727	8,496
966	14 : Activities	1st	LAUNDRY	8' Schoolhouse BP 2L	1	72	4914	RT, 4' 10.5W DE LED 2L	1	21	4914	354	103	251
967	14 : Activities	1st	LAUNDRY	Exit Sign Combo LED	5	3	8760	No Action - Existing Efficient/LED Fixture	5	3	8760	131	131	0
968	14 : Activities	1st	GYM	High Bay LED 150W	28	150	4914	No Action - Existing Efficient/LED Fixture	28	150	4914	20,639	20,639	0
969	14 : Activities	1st	GYM	High Bay MV 160W	12	188	0	No Action - Emergency Use Only	12	188	0	0	0	0
970	14 : Activities	1st	STORAGE	8' Strip SP 2L	1	138	1000	RT, 4' 10.5W DE LED 4L, 8' BC Kit	1	42	1000	138	42	96
971	14 : Activities	1st	RESTROOM	4' Wrap BP 2L 32W T8	2	59	1456	RT, 4' 10.5W DE LED 2L	2	21	1456	172	61	111
972	14 : Activities	1st	RESTROOM	Fan LED 14W A	1	14	1456	LED 9W A19 Replacement	1	10	1456	20	14	7
973	14 : Activities	1st	STAGE/WEIGHTS	Flood LED 12W PAR30	2	12	4914	LED 10W PAR30 Replacement	2	10	4914	118	98	20
974	14 : Activities	1st	STAGE/WEIGHTS	Flood Inc 65W R30	2	65	4914	LED 10W PAR30 Replacement	2	10	4914	639	98	541
975	14 : Activities	1st	STAGE/WEIGHTS	Wall Pack MH 175W	2	215	4914	Wall Pack LED FT TWX 5 kLm PC	2	36	4914	2,113	354	1,759
976	14 : Activities	1st	STAGE/WEIGHTS	Track Head Hal 90W PAR30	8	90	0	No Action - Not In Use	8	90	0	0	0	0
977	14 : Activities	1st	LOCKER ROOM	1x4 Prism Rec 2L 32W T8	4	59	4914	RT, 4' 10.5W DE LED 2L	4	21	4914	1,160	413	747
978	14 : Activities	1st	LOCKER ROOM	4' Wrap BP 2L 32W T8	2	59	4914	RT, 4' 10.5W DE LED 2L	2	21	4914	580	206	373
979	14 : Activities	1st	SHOWERS	12" Rec Sq. LED 14W A	2	14	5824	LED 13W A19 Replacement	2	13	5824	163	151	12
980	14 : Activities	1st	STORAGE	1x4 Prism Rec 2L 32W T8	3	59	1000	RT, 4' 10.5W DE LED 2L	3	21	1000	177	63	114
981	14 : Activities	1st	WEIGHT ROOM	1x4 Prism Rec LED 18W T8 ULA 2L	6	42	4914	RT, 4' 10.5W DE LED 2L	6	21	4914	1,238	619	619
982	14 : Activities	1st	STORAGE	1x4 Prism Rec LED 18W T8 ULA 2L	2	42	1000	RT, 4' 10.5W DE LED 2L	2	21	1000	84	42	42
983	14 : Activities	1st	STORAGE	6" Rec Can LED 14W A	3	14	1000	LED 9W A19 Replacement	3	10	1000	42	29	14
984	14 : Activities	1st	STORAGE	Exit Sign Combo LED	1	3	8760	No Action - Existing Efficient/LED Fixture	1	3	8760	26	26	0
985	14 : Activities	1st	HALLWAY	2x2 Prism Rec 2L 32W U6 T8 AH	4	59	4914	RT, 2' 7W DE LED 2L, 2x2 Refl Kit	4	14	4914	1,160	275	885
986	14 : Activities	1st	HALLWAY	Exit Sign Combo LED	1	3	8760	No Action - Existing Efficient/LED Fixture	1	3	8760	26	26	0
987	14 : Activities	1st	OLD WEIGHT ROOM	8' Schoolhouse HO 2L	6	207	4914	8' Wrap 4' 18.5W LED 4L	6	74	4914	6,103	2,182	3,921
988	14 : Activities	1st	OLD WEIGHT ROOM	Exit Sign Combo LED	1	3	8760	No Action - Existing Efficient/LED Fixture	1	3	8760	26	26	0
989	14 : Activities	1st	ACTIVITY STORAGE 2	8' Industrial BP 2L 32W T8	2	59	1000	RT, 4' 10.5W DE LED 2L	2	21	1000	118	42	76
990	14 : Activities	1st	ACTIVITY STORAGE 1	8' Industrial BP 2L 32W T8	1	59	1000	RT, 4' 10.5W DE LED 2L	1	21	1000	59	21	38
991	14 : Activities	1st	ACTIVITY STORAGE 1	4' Industrial BP 1L 32W T8	2	31	1000	RT, 4' 10.5W DE LED 1L	2	11	1000	62	21	41
992	14 : Activities	1st	LEGAL/MAIL	2x2 Prism Rec 2L 32W U6 T8 AH	4	59	4914	RT, 2' 7W DE LED 2L, 2x2 Refl Kit	4	14	4914	1,160	275	885
993	14 : Activities	1st	LEGAL/MAIL	Emergency Fixture	1	0	0	No Action - Emergency Use Only	1	0	0	0	0	0
994	14 : Activities	1st	LEGAL/MAIL	Exit Sign Combo LED	1	3	8760	No Action - Existing Efficient/LED Fixture	1	3	8760	26	26	0
995	14 : Activities	1st	COMMISSARY	4' Wrap BP 2L 32W T8	3	59	2912	RT, 4' 10.5W DE LED 2L	3	21	2912	515	183	332
996	14 : Activities	1st	COMMISSARY	4' Wrap BP 2L 32W T8	5	59	2912	RT, 4' 10.5W DE LED 2L	5	21	2912	859	306	553
997	14 : Activities	1st	COMMISSARY	4' Wrap BP 2L 32W T8	4	59	2912	RT, 4' 10.5W DE LED 2L	4	21	2912	687	245	443
998	14 : Activities	1st	RESTROOM	Drum LED 14W A 2L	1	28	1456	LED 9W A19 Replacement 2L	1	19	1456	41	28	13
999	14 : Activities	Basement	ELECTRICAL	8' Strip SP 2L T8	5	94	520	RT, 4' 10.5W DE LED 4L, 8' BC Kit	5	42	520	244	109	135
1000	14 : Activities	Lower Level	ELECTRICAL	4' Strip BP 1L 32W T8	2	31	520	RT, 4' 10.5W DE LED 1L	2	11	520	32	11	21
1001	14 : Activities	Lower Level	ELECTRICAL	Exit Sign LED	1	3	8760	No Action - Existing Efficient/LED Fixture	1	3	8760	26	26	0
1002	14 : Activities	Lower Level	ELECTRICAL	Emergency Fixture	2	0	0	No Action - Emergency Use Only	2	0	0	0	0	0
1003	14 : Activities	Lower Level	ELECTRICAL	4' Wrap BP 2L 32W T8	1	59	520	RT, 4' 10.5W DE LED 2L	1	21	520	31	11	20
1004	14 : Activities	Lower Level	SHOP	8' Strip SP 2L T8	6	94	520	RT, 4' 10.5W DE LED 4L, 8' BC Kit	6	42	520	293	131	162
1005	14 : Activities	Lower Level	SHOP	4' Strip BP 1L 32W T8	1	31	520	RT, 4' 10.5W DE LED 1L	1	11	520	16	5	11
1006	14 : Activities	Lower Level	SHOP	RLM CFL 23W Screw In	1	23	520	LED 13W A19 Replacement	1	13	520	12	7	5
1007	14 : Activities	Exterior	STAIRS TO BASEMENT	Wall Pack LED 45W Corn Cob	1	45	4380	Wall Pack LED FT TWX 5 kLm PC	1	36	4380	197	158	39
1008	14 : Activities	Exterior	STAIRS TO BASEMENT	Wall Pack MH 175W	2	215	4380	Wall Pack LED FT TWX 5 kLm PC	2	36	4380	1,883	315	1,568
1009	14 : Activities	Exterior	ROOF LINE	Flood MH 1000W	8	1080	4380	Flood LED 52 kLm SF PC	8	388	4380	37,843	13,596	24,248
1010	14 : Activities	Exterior	EXTERIOR	15" Rec Sq. HPS 70W	1	95	4380	LED 20W A21 Retrofit	1	20	4380	416	88	329
1011	14 : Activities	Exterior	EXTERIOR	Wall Pack MH 70W	2	95	4380	Wall Pack LED FT TWX 3.2 kLm PC	2	22	4380	832	193	639
1012	Yard	1st	GUARD SHACK	4' Wrap BP 2L 32W T8	2	59	364	RT, 4' 10.5W DE LED 2L	2	21	364	43	15	28
1013	Yard	Exterior	PAVILION	Wall Pack MH 150W	1	190	4380	Wall Pack LED FT TWX 5 kLm PC	1	36	4380	832	158	675
1014	Yard	Exterior	PAVILION	Flood MH 400W	1	458	4380	Flood LED 16.5 kLm SF PC	1	133	4380	2,006	583	1,424
1015	Yard	Exterior	PAVILION	Canopy HPS 70W	1	95	4380	Wall Pack LED FT TWX 3.2 kLm PC	1	22	4380	416	96	320
1016	Yard	Exterior	REAR OF CAFETERIA	Wall Pack LED 30W	9	30	4380	No Action - Existing Efficient/LED Fixture	9	30	4380	1,183	1,183	0
1017	Sally Port	Exterior	EXTERIOR	Wall Pack LED 45W Corn Cob	6	45	4380	Wall Pack LED FT TWX 5 kLm PC	6	36	4380	1,183	946	237

1018	Sally Port	1st	INTERIOR SUMMARY	2x2 Prism Rec 2L 32W U6 T8	12	59	6188	RT, 2' 7W DE LED 2L, 2x2 Refl Kit	12	14	6188	4,381	1,040	3,342
1019	Sub Generation	Exterior	SUB GENERATION	Flood MH 400W	2	458	4380	Flood LED 16.5 kLm SF PC	2	133	4380	4,012	1,165	2,847
1020	Sub Generation	Exterior	PLANT	Flood HPS 400W	2	465	4380	Flood LED 16.5 kLm SF PC	2	133	4380	4,073	1,165	2,908
1021	17D : Generator Building	1st	GENERATOR BUILDING	8' Industrial BP 4L 32W T8	6	112	2015	RT, 4' 10.5W DE LED 4L	6	42	2015	1,354	508	846
1022	17D : Generator Building	1st	GENERATOR BUILDING	Exit Sign LED	2	3	8760	No Action - Existing Efficient/LED Fixture	2	3	8760	53	53	0
1023	17D : Generator Building	1st	GENERATOR	8' Industrial BP 4L 32W T8	9	112	2015	RT, 4' 10.5W DE LED 4L	9	42	2015	2,031	762	1,269
1024	17D : Generator Building	1st	GENERATOR	Exit Sign LED	2	3	8760	No Action - Existing Efficient/LED Fixture	2	3	8760	53	53	0
1025	17D : Generator Building	1st	GENERATOR	Emergency Fixture	4	0	0	No Action - Emergency Use Only	4	0	0	0	0	0
1026	17D : Generator Building	Exterior	EXTERIOR	Wall Pack LED 45W Corn Cob	6	45	4380	Wall Pack LED FT TWX 5 kLm PC	6	36	4380	1,183	946	237
1027	17D : Generator Building	Exterior	EXTERIOR	Wall Pack MH 175W	2	215	4380	Wall Pack LED FT TWX 5 kLm PC	2	36	4380	1,883	315	1,568
1028	17B : Carpentry	1st	OFFICE	4' Wrap LED 18W T8 ULB 2L	2	36	2015	RT, 4' 10.5W DE LED 2L	2	21	2015	145	85	60
1029	17B : Carpentry	1st	HALLWAY	4' Wrap LED 18W T8 ULB 2L	1	36	2015	RT, 4' 10.5W DE LED 2L	1	21	2015	73	42	30
1030	17B : Carpentry	1st	TOOLS	4' Wrap BP 2L 32W T8	4	59	1000	RT, 4' 10.5W DE LED 2L	4	21	1000	236	84	152
1031	17B : Carpentry	1st	SHOP	4' Wrap LED 18W T8 ULB 2L	12	36	2015	RT, 4' 10.5W DE LED 2L	12	21	2015	870	508	363
1032	17B : Carpentry	1st	PARTS	4' Wrap BP 2L 32W T8	1	59	1000	RT, 4' 10.5W DE LED 2L	1	21	1000	59	21	38
1033	17B : Carpentry	1st	STAIN ROOM	4' Wrap LED 18W T8 ULB 2L	3	36	2015	RT, 4' 10.5W DE LED 2L	3	21	2015	218	127	91
1034	17B : Carpentry	1st	BREAK ROOM	4' Wrap BP 2L 32W T8	2	59	2015	RT, 4' 10.5W DE LED 2L	2	21	2015	238	85	153
1035	17B : Carpentry	1st	RESTROOM	4' Wrap BP 2L 32W T8	1	59	1456	RT, 4' 10.5W DE LED 2L	1	21	1456	86	31	55
1036	17B : Carpentry	1st	STAFF RESTROOM	4' Wrap BP 2L 32W T8	1	59	1456	RT, 4' 10.5W DE LED 2L	1	21	1456	86	31	55
1037	17B : Carpentry	1st	WOOD STORAGE	High Bay LED 150W	5	150	1000	No Action - Existing Efficient/LED Fixture	5	150	1000	750	750	0
1038	17B : Carpentry	1st	WOOD STORAGE	2X4 Prism Sur LED 18W T8 ULB 2L	1	36	1000	RT, 4' 10.5W DE LED 2L	1	21	1000	36	21	15
1039	17B : Carpentry	1st	WOOD STORAGE	4' Wrap BP 2L 32W T8	2	59	1000	RT, 4' 10.5W DE LED 2L	2	21	1000	118	42	76
1040	17B : Carpentry	1st	WOOD STORAGE	2' Wrap 2L T8	1	33	1000	RT, 2' 7W DE LED 2L	1	14	1000	33	14	19
1041	17B : Carpentry	1st	CAGE	4' Wrap BP 2L 32W T8	8	59	1000	RT, 4' 10.5W DE LED 2L	8	21	1000	472	168	304
1042	17B : Carpentry	Exterior	EXTERIOR	Wall Pack LED 45W Corn Cob	2	45	4380	Wall Pack LED FT TWX 5 kLm PC	2	36	4380	394	315	79
1043	17B : Carpentry	Exterior	GAS PUMP	Flood MH 400W	2	458	4380	Flood LED 16.5 kLm SF PC	2	133	4380	4,012	1,165	2,847
1044	17 : Auto Shop	1st	REAR STORAGE	4' Wrap BP 2L 32W T8	13	59	2015	RT, 4' 10.5W DE LED 2L	13	21	2015	1,546	550	995
1045	17 : Auto Shop	1st	OIL STORAGE	4' Explosion Proof Fixture LED 18W T8 ULB	2	36	1000	RT, 4' 10.5W DE LED 2L TP	2	21	1000	72	42	30
1046	17 : Auto Shop	1st	AUTO SHOP	8' Strip SP 2L T8	17	94	2015	RT, 4' 10.5W DE LED 4L, 8' BC Kit	17	42	2015	3,220	1,439	1,781
1047	17 : Auto Shop	1st	AUTO SHOP	4' Wrap BP 2L 32W T8	3	59	2015	RT, 4' 10.5W DE LED 2L	3	21	2015	357	127	230
1048	17 : Auto Shop	1st	AUTO SHOP	4' Industrial BP 2L 32W T8	4	59	2015	RT, 4' 10.5W DE LED 2L	4	21	2015	476	169	306
1049	17 : Auto Shop	1st	AUTO SHOP	Emergency Fixture	2	0	0	No Action - Emergency Use Only	2	0	0	0	0	0
1050	17 : Auto Shop	1st	TOOL BOX	4' Wrap LED 18W T8 ULB 2L	1	36	2015	RT, 4' 10.5W DE LED 2L	1	21	2015	73	42	30
1051	17 : Auto Shop	1st	OFFICE	2X4 Prism Rec 3L 32W T8	2	89	2015	RT, 4' 10.5W DE LED 2L, 2x4 Refl Kit	2	21	2015	359	85	274
1052	17 : Auto Shop	1st	TOOLS	4' Industrial LED 18W T8 ULB 2L	3	36	1000	RT, 4' 10.5W DE LED 2L	3	21	1000	108	63	45
1053	17 : Auto Shop	1st	PARTS	8' Strip SP 2L T8	4	94	1000	RT, 4' 10.5W DE LED 4L, 8' BC Kit	4	42	1000	376	168	208
1054	17 : Auto Shop	1st	WASH BAY	4' Vaportight LED 25W	8	25	2015	No Action - Existing Efficient/LED Fixture	8	25	2015	403	403	0
1055	17 : Auto Shop	1st	RESTROOM	4' Wrap BP 2L 32W T8	1	59	1456	RT, 4' 10.5W DE LED 2L	1	21	1456	86	31	55
1056	17 : Auto Shop	1st	STAFF RESTROOM	4' Wrap BP 2L 32W T8	1	59	1456	RT, 4' 10.5W DE LED 2L	1	21	1456	86	31	55
1057	17 : Auto Shop	Exterior	EXTERIOR	Wall Pack LED 45W Corn Cob	1	45	4380	Wall Pack LED FT TWX 5 kLm PC	1	36	4380	197	158	39
1058	30 : Warehouse	1st	WAREHOUSE	Exit Sign LED	4	3	8760	No Action - Existing Efficient/LED Fixture	4	3	8760	105	105	0
1059	30 : Warehouse	Exterior	EXTERIOR	Shoebox HPS 400W	7	465	4380	Area LED 16.5 kLm PC Wall Mount	7	133	4380	14,257	4,078	10,179
1060	30 : Warehouse	Exterior	EXTERIOR	Shoebox LED 80W Corn Cob	7	80	4380	Area LED 16.5 kLm PC Wall Mount	7	133	4380	2,453	4,078	-1,625
1061	30 : Warehouse	1st	OPEN WAREHOUSE	High Bay LED 150W	19	150	2015	No Action - Existing Efficient/LED Fixture	19	150	2015	5,743	5,743	0
1062	30 : Warehouse	1st	OPEN WAREHOUSE	4' Industrial LED 18W T8 ULB 2L	9	36	2015	RT, 4' 10.5W DE LED 2L	9	21	2015	653	381	272
1063	30 : Warehouse	1st	OPEN WAREHOUSE	4' Industrial LED 18W T8 ULB 2L	6	36	8760	RT, 4' 10.5W DE LED 2L	6	21	8760	1,892	1,104	788
1064	30 : Warehouse	1st	OFFICE	4' Wrap BP 2L 32W T8	2	59	3640	RT, 4' 10.5W DE LED 2L	2	21	3640	430	153	277
1065	30 : Warehouse	1st	INMATE RESTROOM	1x4 Prism Rec LED 18W T8 ULA 2L	1	42	6188	RT, 4' 10.5W DE LED 2L	1	21	6188	260	130	130
1066	30 : Warehouse	1st	JANITOR	1x4 Prism Rec LED 18W T8 ULA 2L	1	42	1000	RT, 4' 10.5W DE LED 2L	1	21	1000	42	21	21
1067	30 : Warehouse	1st	RESTROOM	Keyless CFL 13W Screw In	1	13	1456	LED 9W A19 Replacement	1	10	1456	19	14	5
1068	30 : Warehouse	1st	OFFICE	2X4 Prism Rec LED 18W T8 ULA 3L Delampe	2	42	3640	RT, 4' 10.5W DE LED 2L	2	21	3640	306	153	153
1069	30 : Warehouse	1st	FREEZER	4' Vaportight LED 25W	4	25	1000	No Action - Existing Efficient/LED Fixture	4	25	1000	100	100	0
1070	30 : Warehouse	1st	FREEZER	Jelly Jar LED 14W A	7	14	1000	LED 9W A19 Replacement	7	10	1000	98	67	32
1071	17 : Auto Shop	1st	STORAGE	4' Industrial BP 2L 32W T8	3	59	1000	RT, 4' 10.5W DE LED 2L	3	21	1000	177	63	114
1072	17C : Outside Grounds	1st	SHOP	Exit Sign Combo LED	2	3	8760	No Action - Existing Efficient/LED Fixture	2	3	8760	53	53	0
1073	17C : Outside Grounds	1st	SHOP	High Bay MH 175W	5	215	2015	High Bay Compact LED 12 kLm	5	88	2015	2,166	887	1,280
1074	17C : Outside Grounds	1st	SHOP	4' Wrap BP 2L 32W T8	5	59	2015	RT, 4' 10.5W DE LED 2L	5	21	2015	594	212	383
1075	17C : Outside Grounds	1st	SHOP	4' Wrap BP 4L 32W T8	4	112	2015	RT, 4' 10.5W DE LED 4L	4	42	2015	903	339	564
1076	17C : Outside Grounds	1st	SHOP	4' Wrap BP 2L 32W T8	3	59	2015	RT, 4' 10.5W DE LED 2L	3	21	2015	357	127	230
1077	17C : Outside Grounds	1st	SHOP	4' Vaportight BP 2L 32W T8	1	59	2015	RT, 4' 10.5W DE LED 2L	1	21	2015	119	42	77
1078	17C : Outside Grounds	1st	RESTROOM	4' Wrap BP 2L 32W T8	1	59	1456	RT, 4' 10.5W DE LED 2L	1	21	1456	86	31	55
1079	17C : Outside Grounds	1st	OFFICE	2X4 Prism Rec 3L 32W T8	2	89	3640	RT, 4' 10.5W DE LED 2L, 2x4 Refl Kit	2	21	3640	648	153	495
1080	17C : Outside Grounds	1st	STORAGE	High Bay LED 45W Corn Cob	1	45	1000	No Action - Existing Efficient/LED Fixture	1	45	1000	45	45	0
1081	17C : Outside Grounds	1st	STORAGE	2x2 Flat Panel Rec LED 30W	1	30	1000	No Action - Existing Efficient/LED Fixture	1	30	1000	30	30	0
1082	17C : Outside Grounds	Exterior	EXTERIOR	Jelly Jar LED 14W A	1	14	4380	Wall Pack LED FT TWX 1.6 kLm PC	1	11	4380	61	48	13
1083	17C : Outside Grounds	Exterior	EXTERIOR	Wall Pack LED 45W Corn Cob	1	45	4380	Wall Pack LED FT TWX 5 kLm PC	1	36	4380	197	158	39
1084	16 : Sewer Treatment Plant	Exterior	POLES	Flood MH 100W	31	128	4380	Flood LED 3 kLm SF PC	31	21	4380	17,380	2,851	14,528
1085	16 : Sewer Treatment Plant	1st	OFFICE/LAB	4' Wrap BP 2L 32W T8	2	59	2912	RT, 4' 10.5W DE LED 2L	2	21	2912	344	122	221
1086	16 : Sewer Treatment Plant	1st	RESTROOM	4' Wrap BP 2L 32W T8	1	59	1456	RT, 4' 10.5W DE LED 2L	1	21	1456	86	31	55
1087	16 : Sewer Treatment Plant	1st	OFFICE	4' Wrap BP 2L 32W T8	1	59	2912	RT, 4' 10.5W DE LED 2L	1	21	2912	172	61	111
1088	16 : Sewer Treatment Plant	1st	RESTROOM	4' Wrap BP 2L 32W T8	1	59	1456	RT, 4' 10.5W DE LED 2L	1	21	1456	86	31	55
1089	16 : Sewer Treatment Plant	1st	STORAGE	4' Wrap BP 2L 32W T8	3	59	1000	RT, 4' 10.5W DE LED 2L	3	21	1000	177	63	114
1090	16 : Sewer Treatment Plant	1st	LAB	4' Wrap BP 2L 32W T8	3	59	2912	RT, 4' 10.5W DE LED 2L	3	21	2912	515	183	332
1091	16 : Sewer Treatment Plant	1st	LAB	Exit Sign CFL 9W 2L	1	20	8760	Exit Sign LED BB	1	3	8760	175	26	149
1092	16 : Sewer Treatment Plant	1st	LAB	Exit Combo CFL 9W 2L	1	20	8760	Exit Sign LED Combo	1	6	8760	175	53	123
1093	16 : Sewer Treatment Plant	1st	LAB	Canopy MH 70W	3	95	2912	Wall Pack LED FT TWX 3.2 kLm PC	3	22	2912	830	192	638
1094	16 : Sewer Treatment Plant	Exterior	PRESS BUILDING	Wall Pack CFL 32W 4P	2	34	4380	Wall Pack LED FT TWX 1.6 kLm PC	2	11	4380	298	96	201
1095	16 : Sewer Treatment Plant	1st	PUMP	Wall Pack LED 14W A	1	14	2912	LED 9W A19 Replacement	1	10	2912	41	28	13
1096	16 : Sewer Treatment Plant	1st	PUMP	4' Vaportight BP 2L 32W T8	5	59	2912	RT, 4' 10.5W DE LED 2L	5	21	2912	859	306	553
1097	16 : Sewer Treatment Plant	1st	PUMP	Emergency Fixture	1	0	0	No Action - Emergency Use Only	1	0	0	0	0	0
1098	16 : Sewer Treatment Plant	1st	PUMP	Exit Sign LED	1	3	8760	No Action - Existing Efficient/LED Fixture	1	3	8760	26	26	0
1099	16 : Sewer Treatment Plant	1st	CHLORINE BUILDING	4' Vaportight BP 2L 32W T8	2	59	2912	RT, 4' 10.5W DE LED 2L	2	21	2912	344	122	221
1100	16 : Sewer Treatment Plant	1st	STORAGE	4' Vaportight BP 2L 32W T8	6	59	1000	RT, 4' 10.5W DE LED 2L	6	21	1000	354	126	228
1101	16 : Sewer Treatment Plant	1st	STORAGE	4' Vaportight BP 2L 32W T8	4	59	1000	RT, 4' 10.5W DE LED 2L	4	21	1000	236	84	152
1102	16 : Sewer Treatment Plant	1st	STORAGE SHED	4' Wrap BP 2L 32W T8	2	59	1000	RT, 4' 10.5W DE LED 2L	2	21	1000	118	42	76

1103	16 : Sewer Treatment Plant	1st	TANK	Shoebox MH 400W	2	458	1000	Area LED 16.5 kLm PC	2	133	1000	916	266	650
1104	16 : Sewer Treatment Plant	1st		4' Vaportight LED 18W T8 ULB 2L	4	36	2912	RT, 4' 10.5W DE LED 2L	4	21	2912	419	245	175
1105	16 : Sewer Treatment Plant	1st		4' Vaportight BP 2L 32W T8	15	59	2912	RT, 4' 10.5W DE LED 2L	15	21	2912	2,577	917	1,660
1106	16 : Sewer Treatment Plant	1st		4' Wrap BP 2L 32W T8	16	59	2912	RT, 4' 10.5W DE LED 2L	16	21	2912	2,749	978	1,770
1107	16 : Sewer Treatment Plant	Exterior	TRAINING 30X30	Barnlight MH 150W	1	190	4380	Barnlight LED 4 kLm PC	1	36	4380	832	158	675
Totals					**5,486**				**5,486**			**1,649,682**	**703,667**	**946,016**

Ground Mount SCI Mercer, SCI Mercer

Report

Project Name	SCI Mercer
Project Address	SCI Mercer
Prepared By	Sustainable Infrastructure helioscopesi@energysystemsgroup.com

System Metrics

Design	Ground Mount
Module DC Nameplate	8.79 MW
Inverter AC Nameplate	6.88 MW Load Ratio: 1.28
Annual Production	10.63 GWh
Performance Ratio	79.1%
kWh/kWp	1,209.2
Weather Dataset	TMY, 10km Grid (41.25,-80.25), NREL (prospector)
Simulator Version	d18236f50b-8729c222a5-883cb50c04-dcf225e0b0

Project Location

Monthly Production

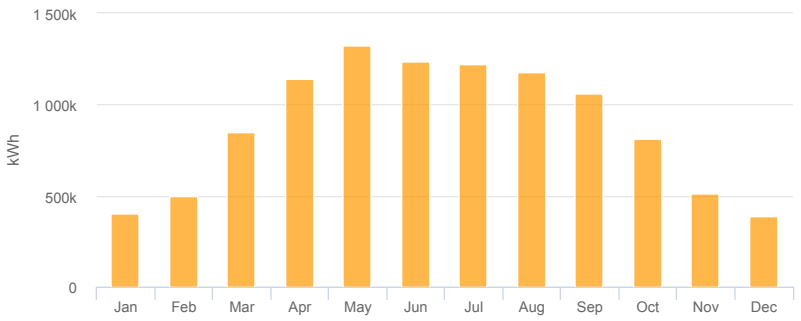

Sources of System Loss

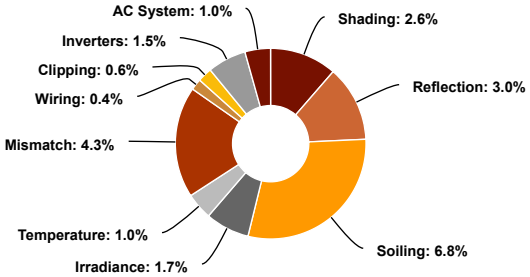

Annual Production

	Description	Output	% Delta
Irradiance (kWh/m²)	Annual Global Horizontal Irradiance	1,363.2	
	POA Irradiance	1,528.1	12.1%
	Shaded Irradiance	1,488.1	-2.6%
	Irradiance after Reflection	1,444.0	-3.0%
	Irradiance after Soiling	1,346.0	-6.8%
	Total Collector Irradiance	**1,345.9**	**0.0%**
Energy (kWh)	Nameplate	11,831,128.3	
	Output at Irradiance Levels	11,627,648.8	-1.7%
	Output at Cell Temperature Derate	11,506,856.9	-1.0%
	Output After Mismatch	11,007,970.6	-4.3%
	Optimal DC Output	10,959,889.2	-0.4%
	Constrained DC Output	10,897,924.2	-0.6%
	Inverter Output	10,733,529.0	-1.5%
	Energy to Grid	**10,626,193.0**	**-1.0%**
Temperature Metrics			
	Avg. Operating Ambient Temp	11.8 °C	
	Avg. Operating Cell Temp	18.7 °C	
Simulation Metrics			
	Operating Hours	4639	
	Solved Hours	4639	

Condition Set

Description	Condition Set 1			
Weather Dataset	TMY, 10km Grid (41.25,-80.25), NREL (prospector)			
Solar Angle Location	Meteo Lat/Lng			
Transposition Model	Perez Model			
Temperature Model	Sandia Model			
Temperature Model Parameters	Rack Type	a	b	Temperature Delta
	Fixed Tilt	-3.56	-0.075	3°C
	Flush Mount	-2.81	-0.0455	0°C
	East-West	-3.56	-0.075	3°C
	Carport	-3.56	-0.075	3°C

Soiling (%)	J	F	M	A	M	J	J	A	S	O	N	D
	31.9	25.2	10	3.2	1	2.2	5.2	3.5	3.3	1	5.4	19.2

Irradiation Variance	5%		
Cell Temperature Spread	4° C		
Module Binning Range	-2.5% to 2.5%		
AC System Derate	1.00%		
Module Characterizations	Module	Uploaded By	Characterization
	SIL-500HM (Silfab Solar)	ESG	Silfab_SIL-500HM_PV6-79.RETC-SFB025e-210414.PAN, PAN
Component Characterizations	Device	Uploaded By	Characterization
	Sunny Highpower PEAK3 125-US (2020) (SMA)	HelioScope	Spec Sheet

Components

Component	Name	Count
Inverters	Sunny Highpower PEAK3 125-US (2020) (SMA)	55 (6.88 MW)
Strings	10 AWG (Copper)	660 (287,865.4 ft)
Module	Silfab Solar, SIL-500HM (500W)	17,576 (8.79 MW)

Wiring Zones

Description	Combiner Poles	String Size	Stringing Strategy
Wiring Zone	-	19-28	Along Racking

Field Segments

Description	Racking	Orientation	Tilt	Azimuth	Intrarow Spacing	Frame Size	Frames	Modules	Power
Field Segment 1	Fixed Tilt	Portrait (Vertical)	20°	180°	17.8 ft	2x1	4,645	9,290	4.65 MW
Field Segment 2	Fixed Tilt	Portrait (Vertical)	20°	180°	17.8 ft	2x1	1,063	2,126	1.06 MW
Field Segment 3	Fixed Tilt	Portrait (Vertical)	20°	180°	17.8 ft	2x1	1,292	2,584	1.29 MW
Field Segment 4	Fixed Tilt	Portrait (Vertical)	20°	180°	17.8 ft	2x1	450	900	450.0 kW
Field Segment 5	Fixed Tilt	Portrait (Vertical)	20°	180°	17.8 ft	2x1	1,082	2,164	1.08 MW
Field Segment 6	Fixed Tilt	Portrait (Vertical)	20°	180°	17.8 ft	2x1	256	512	256.0 kW

Detailed Layout

Building Area (ft^2)	382,240
Building Perimeter (ft)	3,375
No. Storeys	2
No. Storeys above grade	2
Area of any 1-storey section (ft^2)	191,120
Electric Cost ($/kWh)	
Demand Cost ($/kW)	
Thermal Cost ($/MMBtu)	
Water & Sewer Cost ($/kGal)	
Heating Eff (%)	75%
DHW heating Eff (%)	75%
Cooling Eff (kW/ton)	1.00
% of building fully cooled	60%
General roof type	TPO
General roof condition	Good

Baseline

	Occupied	Unocc
Winter Inside Set Point (°F)	70.0	70.0
Summer Inside Set Point (°F)	72.0	72.0

Proposed

	Occupied	Unocc
Winter Inside Set Point (°F)	70.0	68.00
Summer Inside Set Point (°F)	72.0	74.00

Estimated Balance Point (°F)	55
portion of building able to be set back	50%

heating design temp for location (°F)	13.50
cooling design temp for location (°F)	89.80
average windspeed for location (mph)	8.6
building population - students	
building population - staff	
average actual occ hours per day	14
average actual occ days per year	180
Electric Consumption Baseline (kWh/year)	12,341,918
Electric Demand Baseline (∑kW/year)	2,695
Thermal Consumption Baseline (MMBtu/year)	20,109
Water & Sewer Consumption Baseline (kGal/year)	

Title IM Name:	**RETROCOMMISSSIONING or OPERATIONAL VERIFICATION & HVAC TUNE UP**
IM Description	Calibration / correct existing controls
Project	**SCI Mercer**
Facility / Site	**SCI Mercer**
	ENGINEERING CHECK NOT MET
Calculation Description	Calculate a percentage of energy savings by correcting and optimizing HVAC systems and controls.

Note: Fuel in this context is any fuel (natural gas, fuel oil, propane etc.) used in facility HVAC systems impacted by operational verification & HVAC tune up, commissioning, or retocommissioning.

	Variable ID			Calculated	Units	Variable Source	
Given	$kWh_{Baeline}$	Existing Electric Energy Baseline (kWh)	=	7,396,437	kWh	Given	Utility Baseline / Analysis
	$Fuel_{Baseline}$	Existing Thermal Usage (Units->)	=	4,945,481	kWh	Given	Utility Baseline / Analysis
		Conversion Factor (convert to MMBtu)	=	0.00341	MMBtu/kWh		
		Existing Thermal Usage (MMBtu)	=	16,874	MMBtu		
		Total Facility Square Footage	=	352,905	sq. ft.	Given	Owner Provided
		Square Footage of Associated Area	=	352,905	sq. ft.	Assumption	Engineering Est.
Variables							
	$FOS_{Electric}$	Factor of Safety (electric)	=	90%	%	Assumption	Engineering Est.
	$SF_{Electric}$	Electric Savings Factor (energy)	=	3.2%	%	Assumption	Engineering Est.
	FOS_{Fuel}	Factor of Safety (fuel / thermal)	=	90%	%	Assumption	Engineering Est.
	SF_{Fuel}	Fuel Savings Factor (natural gas, fuel oil, etc.)	=	3.2%	%	Assumption	Engineering Est.
	$EIF_{Electric}$	Electric energy impact factor	=	70%	%	Assumption	Engineering Est.
	EIF_{Fuel}	Fuel energy impact factor	=	85%	%	Assumption	Engineering Est.

Calculation

		Calculated		
$IE_{Electric}$	Electric energy that can be impacted by ECM	5,177,506	kWh/yr	$=kWh_{Baeline} * EIF_{Electric}$
IE_{Fuel}	Fuel energy that can be impacted by ECM	14,343	MMBtu/yr	$= Fuel_{base} * EIF_{Fuel}$
$FOS_{Electric}$	Factor of Safety (electric)	90%	%	
$SF_{Electric}$	Electric Savings Factor (energy)	3.2%	%	
kWh_{Saved}	**Electric Energy Savings (kWh/yr)**	**149,112**	kWh/yr	$= IE_{Electric} * FOS_{Electric} * SF_{Electric}$
FOS_{Fuel}	Factor of Safety (fuel / thermal)	90%	%	
SF_{Fuel}	Fuel Savings Factor (natural gas, fuel oil, etc.)	3.2%	%	
$Fuel_{Saved}$	**Fuel / Thermal Energy Savings (MMBtu/yr)**	**413**	MMBtu/yr	$= IE_{Fuel} * FOS_{Fuel} * SF_{Fuel}$

Results

CALCULATED	Existing	Proposed	Saved	
kWh/yr	**7,396,437**	**7,247,325**	**149,112**	kWh/yr
MMBtu/yr	**16,874**	**16,461**	**413.1**	MMBtu/yr
kWh/yr	**168,740**	**164,609**	**4131**	kWh/yr

BMS - HVAC Controls

Electric Cost ($/kWh)	0
Demand Cost ($/kW)	0
Thermal Cost ($/MMBt	0
Cooling Eff (kW/ton)	1

Summary	Savings	$ Savings
kWh/yr	156,245	
kW	-	
Total		$ -

Input Variables

http://www.sugartech.co.za/psychro/index.php

	Existing (°F DB)	Proposed (°F DB)	Existing (h, Btu/lb)	Proposed (h, Btu/lb)
Summer Occupied Setpoint	72	72	27	27
Summer Unoccupied Setpoint	72	74	50	50
Winter Occupied Setpoint	70	70		
Winter Unoccupied Setpoint	70	68		

Fan kWh	5,587
Cooling kWh	11,047
error check>>	*(139,611)*

Existing

	KW	AHU/UV Fan % Operation Occupied	AHU/UV Fan % Operation Unoccupied	OA Damper Postion Occupied	OA Damper Postion Unoccupied	Exhaust Fan % Operation Occupied
Fan Operation	0.00	85%	85%	open	open	80%

Proposed

	KW	AHU/UV Fan % Operation Occupied	AHU/UV Fan % Operation Unoccupied	OA Damper Postion Occupied	OA Damper Postion Unoccupied	Exhaust Fan % Operation Occupied
Fan Operation	0.00	85%	75%	open	closed	80%

Percent of Building Setback	100
Building Area	382,240
Exterior Wall Area	50,625
Roof Area	382,240
Average R-value of Wall	10.00
Average R-Value of Roof	20.00
Boiler Efficiency (%)	75%
Cooling System Efficiency (kW/ton)	1.00
Percent of Building Cooled	0.60

	Existing	Proposed
Min OA CFM - occ	7,864	7,864
Min OA CFM - unocc	6,685	-
Exhaust CFM - occ	14,080	14,080
Exhaust CFM - unocc	14,080	14,080

Gym
14.00
0.12
6,500
780

Assumptions and Constants:	
Building Balance Point	55.00
Default Wall R-Value	10.00
Default Roof R-Value	20.00
Building Infiltration- Air Changes Per Hour	0.40

Calculations:

For both Existing and Proposed Case:
Envelope Load MMBtu = (UA x (∑(OAT-Occupied Setpoint) x Occupied Hours + ∑(OAT-Unoccupied Setpoint) x Unoccupied Hours))/10^6
Infiltration Load MMBtu = (1.08 x Infiltration CFM x (∑(OAT-Occupied Setpoint) x Occupied Hours + ∑(OAT-Unoccupied Setpoint) x Unoccupied Hours))/10^6

Where
UA = 1/R-Value of Wall x Wall Area + 1/R-Value of Roof x Roof Area
Infiltration CFM = Building Area x 10 Feet Average Height x Building Air Changes Per Hour/60

Cooling kWh = (Envelope + Infiltration Load) x 10^6/12000 x kW/Ton Cooling Efficiency (Loads for Hours above Balance Point only)
Heating MMBtu = (Envelope + Infiltration Load)/ Heating Efficiency (Loads for Hours below Balance Point only)

Overall UA Value	24,175
Infiltration CFM	25,483

Existing

	AHU/UV CFM	Additional Exhaust Fan	Total CFM
Ventilation CFM Occupied	7864		7864
Ventilation CFM Unoccupied	6685		6685

Proposed

	AHU/UV CFM
CFM Occ	7864
CFM Unocc	0

	Existing Case							
Bin Temp	Hours Unoccupied	Occupied	Total Hours	Envelope Loss/Gain MMBtu	Infiltration CFM	Infiltration Loss/Gain MMBtu	Fan kWh	design OAT -->
97.5	2	0	2	1	25,483	1	22	
92.5	31	0	31	15	25,483	17	339	
87.5	180	0	180	67	25,483	77	1970	
82.5	430	15	445	113	25,483	129	4870	
77.5	533	88	621	83	25,483	94	6796	
72.5	696	178	874	11	25,483	12	9565	
67.5	645	229	874	0	25,483	0	9565	
62.5	506	297	803	0	25,483	0	8788	
57.5	647	380	1027	0	25,483	0	11239	
52.5	264	443	707	299	25,483	341	7737	
47.5	522	297	819	445	25,483	507	8963	
42.5	552	319	871	579	25,483	659	9532	
37.5	396	288	684	537	25,483	612	7485	
32.5	76	243	319	289	25,483	329	3491	
27.5	158	107	265	272	25,483	310	2900	
22.5	63	83	146	168	25,483	191	1598	
17.5	15	36	51	65	25,483	74	558	
12.5	26	9	35	49	25,483	55	383	

7.5	-4	10	6	9	25,483	10	66
	5,738	3,022	8760	3003		3418	95865

	Proposed Case						
Bin Temp	Hours Unoccupied	Occupied	Total Hours	Envelope Loss/Gain MMBtu	Infiltration CFM	Infiltration Loss/Gain MMBtu	Fan kWh
97.5	2	0	2	1	25,483	1	20
92.5	31	0	31	14	25,483	16	309
87.5	180	0	180	59	25,483	67	1795
82.5	430	15	445	92	25,483	105	4451
77.5	533	88	621	57	25,483	65	6277
72.5	696	178	874	2	25,483	2	8887
67.5	645	229	874	0	25,483	0	8937
62.5	506	297	803	0	25,483	0	8295
57.5	647	380	1027	0	25,483	0	10609
52.5	264	443	707	286	25,483	326	7480
47.5	522	297	819	420	25,483	478	8454
42.5	552	319	871	552	25,483	629	8994
37.5	396	288	684	518	25,483	590	7100
32.5	76	243	319	286	25,483	325	3417
27.5	158	107	265	265	25,483	301	2746
22.5	63	83	146	165	25,483	187	1536
17.5	15	36	51	64	25,483	73	544
12.5	26	9	35	47	25,483	54	358
7.5	-4	10	6	9	25,483	11	70
	5,738	3,022	8760	2837		3230	90278

Walk-in Cooler/Freezer Controls

Electric Cost ($/kWh)	0
Demand Cost ($/kW)	0
Thermal Cost ($/MMBtu)	0
Heating Eff (%)	0.75
Cooling Eff (kW/ton)	1

Summary	Baseline	Proposed	Savings	$ Savings
kWh/yr	10,596	3,492	7,104	$ -
kW			-	$ -
MMBtu/yr	-	-	-	$ -
Total				$ -

Summary of Energy Calculations		Load Present	Load Proposed	Load Savings	Additional Savings	Total Savings
Savings by Cycling Evaporator Fans		10,596	5,714	4,883	2,222	7,104
Savings from Direct Digital Controller		0	0	0	0	0
Door Heater Control	Coolers	0	0	0	0	0
Savings From ECM Motors for Evaporator Fans		0	0	0	0	0
						7,104

VOLUMETRIC CALCULATION					
	Cooler Temp. set point Degrees F	Length ft	Width ft	Height ft	Total Walk in Volume (Cu ft)
Refrigerator 1	30	10	10	6	600
					0
					0
Freezer 1	(5)	10	10	6	600
					0
					0
					0
					0
					0
					0
					0
					0
					0
					0
Total Volume					600

ANALYSIS OF CYCLING EVAPORATOR FANS						
	Number of Fans	Required Amperage	Required Voltage	Power Factor	Total Load (Watts)	Total Load (kW)
Refrigerator 1	4	1.8	120	0.7	605	0.605
					0	-
					0	-
Freezer 1	4	1.8	120	0.7	605	0.605
					0	-
					0	-
					0	-
					0	-
					0	-
					0	-
Total Demand						1.210
Current Annual Operating Hours of evaporator Fans						8,760
Evaporator Fan Off-Hours						4,036
Savings due to cycling of evaporator fans						4,883 kWh/yr
Savings due to Reduced Cooling Load from evaporator fans						2,222 kWh/yr
Net Energy Saved by Cycling Evap. Fans						7,104 kWh/yr

AkWh=NxVxAxPFxrx(1-DP)xh/1000(W/kW)x(1+1/ACOP)

AkWh	Annual Gross Electric Energy Sav	7,104
N	Number of Fans	
V	Voltage	
A	Amperage	
PF	Power Factor	0.7
r	Adjustment speed for two speed c	1
DP	Power Reduction Factor	0%
h	Fan off hours after installation	3,000
ACOP	Average Coefficient of Performan	2.1975

ANALYSIS OF REPLACING EVAPORATOR MOTORS WITH ECM MOTORS		
ECM Motors reduce motor and refrigeration load		
kW load of Evaporator Fans	1.210	
Estimated Hours of Evaporator Fans	4,724	hours
Fan Annual Energy Use	5,714	kWh/yr
Estimated % Motor Load Reduction	40%	
Motor Savings	2,285	kWh/yr
Estimated Savings From Reduced Cooling	1,040.01	kWh/yr
Total Savings From ECM Motors for Evaporators Fans	3,325	kWh/yr

Domestic Hot Water Heater Upgrades - Heat Pumps

Summary	Baseline	Proposed	Savings	$ Savings
kWh/yr	331,538	129,913	201,625	
kW	-	-	-	
MMBtu/yr	-	-	-	
Total				$ -

UEF-baseline	1.0
UEF-proposed	2.2
Adjustment Factor	1.16
Gal/Yr	1,947,000
Temp. Rise (*F)	70
kWh Baseline	331,538
kWh Propsed	129,913

AHU Refurbishments

Electric Cost ($/kWh)	
Demand Cost ($/kW)	
Thermal Cost ($/MMBtu)	
Heating Eff (%)	75%
Cooling Eff (kW/ton)	1.50

Summary	Baseline	Proposed	Savings	Savings as % of Baseline	$ Savings
kWh/yr	179,573	169,919	9,654	5%	$ -
kW			-		$ -
MMBtu/yr	-	-	-		$ -
Total					$ -

AHU Existing Case (3 AHU)		
Motor Horsepower	76.00	hp estimated
Motor Efficiency	88%	average
Motor Power Factor	0.75	
Annual Run Hours	3716.3	
Motor Consumption	48.3	kW
Motor Consumption	179573	kWh

Note: AHU hp is estimated for this building

AHU Proposed Case (3 AHU)		
Motor Horsepower	76.00	hp
Motor Efficiency	93%	average
Motor Power Factor	0.75	
Annual Run Hours	3716.3	
Motor Consumption	45.7	kW
Motor Consumption	169919	kWh

AHU Replacement Savings/AHU	2.60	kW
AHU Replacement Savings/AHU	9654.48	kWh

UNIT	CFM	HP (est)
HVAC-1	11,500	5.0
HVAC-2	5,206	3.0
HVAC-3	5,205	3.0
HVAC-4	9,285	4.0
HVAC-5	5,206	3.0
HVAC-6	11,500	5.0
HVAC-7	11,500	5.0
HVAC-18	5,206	3.0
HVAC-19	5,206	3.0
HVAC-20	5,206	3.0
HVAC-21	5,500	3.0
HVAC-22	5,500	3.0
HVAC-28	6,897	3.0
HVAC-29	12,900	6.0
HVAC-30	4,500	2.0
HVAC-37	2,444	1.0
HVAC-38	9,285	4.0
HVAC-39	3,200	2.0
HVAC-40	2,500	1.0
HVAC-41	9,750	4.0
HVAC-42	9,750	4.0
HVAC-43	6,300	3.0
HVAC-44	1,500	1.0
HVAC-45	1,500	1.0
HVAC-57	2,400	1.0

RTU & AHU Replacements with Heat Pumps

Electric Cost ($/kWh)	0
Demand Cost ($/kW)	0
Thermal Cost ($/MMBtu)	0

Summary	Baseline	Proposed	Savings	$ Savings
kWh/yr	4,581,394	2,352,920	2,228,474	$ -
kW			-	$ -
MMBtu/yr	-	-	-	$ -
Total				$ -

Equipment Name	Equipment Manufacturer	Model Number	Capacity Tons	Existing EER	Each Month kW	Cooling EFLH	Cooling kWh Existing	New EER	Each Month kW	Cooling EFLH	Cooling kWh Proposed	Cooling Type	Replace?
HVAC-1	x	x	50	9	66.7	607	40,467	14	42.9	607	26,014	DX	Y
HVAC-2	x	x	15	9	20.0	607	12,140	14	12.9	607	7,804	DX	Y
HVAC-3	x	x	15	9	20.0	607	12,140	14	12.9	607	7,804	DX	Y
HVAC-4	x	x	30	9	40.0	607		14	25.7	607		DX	N
HVAC-5	x	x	15	9	20.0	607	12,140	14	12.9	607	7,804	DX	Y
HVAC-6	x	x	40	9	53.3	607	32,373	14	34.3	607	20,811	DX	Y
HVAC-7	x	x	40	9	53.3	607	32,373	14	34.3	607	20,811	DX	Y
HVAC-8	x	x	10	9	13.3	607		14	8.6	607		DX	N
HVAC-9	x	x	10	9	13.3	607		14	8.6	607		DX	N
HVAC-10	x	x	10	9	13.3	607		14	8.6	607		DX	N
HVAC-11	x	x	10	9	13.3	607		14	8.6	607		DX	N
HVAC-12	x	x	6	9	8.0	607		14	5.1	607		DX	N
HVAC-13	x	x	25	9	33.3	607	20,233	14	21.4	607	13,007	DX	Y
HVAC-14	x	x	25	9	33.3	607	20,233	14	21.4	607	13,007	DX	Y
HVAC-15	x	x	25	9	33.3	607	20,233	14	21.4	607	13,007	DX	Y
HVAC-16	x	x	25	9	33.3	607	20,233	14	21.4	607	13,007	DX	Y
HVAC-17	x	x	4	9	5.3	607	3,237	14	3.4	607	2,081	DX	Y
HVAC-18	x	x	15	9	20.0	607	12,140	14	12.9	607	7,804	DX	Y
HVAC-19	x	x	15	9	20.0	607	12,140	14	12.9	607	7,804	DX	Y
HVAC-20	x	x	15	9	20.0	607	12,140	14	12.9	607	7,804	DX	Y
HVAC-21	x	x	15	9	20.0	607	12,140	14	12.9	607	7,804	DX	Y
HVAC-22	x	x	15	9	20.0	607	12,140	14	12.9	607	7,804	DX	Y
HVAC-23	x	x	25	9	33.3	607	20,233	14	21.4	607	13,007	DX	Y
HVAC-24	x	x	25	9	33.3	607	20,233	14	21.4	607	13,007	DX	Y
HVAC-25	x	x	25	9	33.3	607	20,233	14	21.4	607	13,007	DX	Y
HVAC-26	x	x	25	9	33.3	607	20,233	14	21.4	607	13,007	DX	Y
HVAC-27	x	x	4	9	5.3	607	3,237	14	3.4	607	2,081	DX	Y
HVAC-28	x	x	17	9	23.0	607	13,955	14	14.8	607	8,971	DX	Y
HVAC-29	x	x	32	11	35.2	607	21,355	14	27.6	607	16,779	CW	Y
HVAC-30	x	x	11	11	12.3	607	7,450	14	9.6	607	5,853	CW	Y
HVAC-31	x	x	11	9	15.0	607	9,105	14	9.6	607	5,853	DX	Y
HVAC-32	x	x	36	9	48.0	607	29,136	14	30.9	607	18,730	DX	Y
HVAC-33	x	x	12	9	16.0	607	9,712	14	10.3	607	6,243	DX	Y
HVAC-34	x	x	2	9	2.7	607	1,619	14	1.7	607	1,041	DX	Y
HVAC-35	x	x	12.5	9	16.7	607	10,117	14	10.7	607	-		Y
HVAC-36a	x	x	12.5	9	16.7	607	10,117	14	10.7	607	-		Y
HVAC-36b	x	x	12.5	9	16.7	607	10,117	14	10.7	607	-		Y
HVAC-36c	x	x	0	9	0.0	607		14	0.0	607			N
HVAC-36d	x	x	0	9	0.0	607		14	0.0	607			N
HVAC-36e	x	x	0	9	0.0	607		14	0.0	607			N
HVAC-37	x	x	6	11	6.7	607	4,046	14	5.2	607	3,179	CW	Y
HVAC-38	x	x	30	9	40.0	607	24,280	14	25.7	607	15,609	DX	Y
HVAC-39	x	x	8	9	10.7	607	6,475	14	6.9	607	4,162	DX	Y
HVAC-40	x	x	6	9	8.3	607	5,058	14	5.4	607	3,252	DX	Y
HVAC-41	x	x	0	9	0.0	607	-	14	0.0	607	-		Y
HVAC-42	x	x	0	9	0.0	607	-	14	0.0	607	-		Y
HVAC-43	x	x	0	9	0.0	607		14	0.0	607			N
HVAC-44	x	x	4	9	5.0	607		14	3.2	607		DX	N
HVAC-45	x	x	4	9	5.0	607		14	3.2	607		DX	N
HVAC-46	x	x	4	9	5.0	607		14	3.2	607		DX	N
HVAC-47	x	x	6	9	7.3	607		14	4.7	607		DX	N
HVAC-48	x	x	6	9	7.3	607		14	4.7	607		DX	N
HVAC-49	x	x	6	9	7.3	607		14	4.7	607		DX	N
HVAC-50	x	x	3	9	4.0	607		14	2.6	607		DX	N
HVAC-51	x	x	3	9	4.0	607		14	2.6	607		DX	N

HVAC-52	x	x	6	9	8.0	607		14	5.1	607		DX	N
HVAC-53	x	x	6	9	8.0	607		14	5.1	607		DX	N
HVAC-54	x	x	6	9	8.0	607		14	5.1	607		DX	N
HVAC-55	x	x	6	9	8.0	607		14	5.1	607		DX	N
HVAC-56	x	x	8	9	10.0	607	6,070	14	6.4	607	3,902	DX	Y
HVAC-57	x	x	0	9	0.0	607	-	14	0.0	607	-		Y
HVAC-58	x	x	49	9	65.3	607		14	42.0	607		WSHP	N
HVAC-59	x	x	4	9	4.7	607		14	3.0	607		DX	N
Total							539,285				331,866		

Total kWh Saved	207,420

		Heating Output MBH	Existing Eff.	Proposed Eff.	EFLH	Existing MMBtu/yr	Proposed MMBtu/yr	Saved MMBtu/yr
					409.25	-	-	
					409.25	-	-	
					409.25	-	-	
						-	-	

Thermal EFLH Derate
0.25

Equipment Name	Equipment Manufacturer	Model Number	Capacity Tons	Existing COP	Each Month kW	Heating EFLH	Heating kWh Existing	New COP	Each Month kW	Heating EFLH	Heating kWh Proposed	Heating Type	Replace?
HVAC-1	x	x	50	1	200	1,437	287,400	2	100	1,437	143,700		Y
HVAC-2	x	x	15	1	53	1,437	75,809	2	26	1,437	37,904		Y
HVAC-3	x	x	15	1	53	1,437	75,809	2	26	1,437	37,904		Y
HVAC-4	x	x	30	1.75	60	1,437		2	53	1,437		HP	N
HVAC-5	x	x	15	1	53	1,437	75,809	2	26	1,437	37,904		Y
HVAC-6	x	x	40	1	200	1,437	287,400	2	100	1,437	143,700		Y
HVAC-7	x	x	40	1	200	1,437	287,400	2	100	1,437	143,700		Y
HVAC-8	x	x	10	1.75	40	1,437		2	35	1,437		HP	N
HVAC-9	x	x	10	1.75	40	1,437		2	35	1,437		HP	N
HVAC-10	x	x	10	1.75	40	1,437		2	35	1,437		HP	N
HVAC-11	x	x	10	1.75	40	1,437		2	35	1,437		HP	N
HVAC-12	x	x	6	1.75	25	1,437		2	22	1,437		HP	N
HVAC-13	x	x	25	1	72	1,437	103,464	2	36	1,437	51,732		Y
HVAC-14	x	x	25	1	72	1,437	103,464	2	36	1,437	51,732		Y
HVAC-15	x	x	25	1	72	1,437	103,464	2	36	1,437	51,732		Y
HVAC-16	x	x	25	1	72	1,437	103,464	2	36	1,437	51,732		Y
HVAC-17	x	x	4	1	12	1,437	17,244	2	6	1,437	8,622		Y
HVAC-18	x	x	15	1	53	1,437	75,809	2	26	1,437	37,904		Y
HVAC-19	x	x	15	1	53	1,437	75,809	2	26	1,437	37,904		Y
HVAC-20	x	x	15	1	53	1,437	75,809	2	26	1,437	37,904		Y
HVAC-21	x	x	15	1	67	1,437	96,279	2	34	1,437	48,140		Y
HVAC-22	x	x	15	1	67	1,437	96,279	2	34	1,437	48,140		Y
HVAC-23	x	x	25	1	72	1,437	103,464	2	36	1,437	51,732		Y
HVAC-24	x	x	25	1	72	1,437	103,464	2	36	1,437	51,732		Y
HVAC-25	x	x	25	1	72	1,437	103,464	2	36	1,437	51,732		Y
HVAC-26	x	x	25	1	72	1,437	103,464	2	36	1,437	51,732		Y
HVAC-27	x	x	4	1	12	1,437	17,244	2	6	1,437	8,622		Y
HVAC-28	x	x	17.2425	1	83	1,437	118,932	2	41	1,437	59,466		Y
HVAC-29	x	x	32.25	1	155	1,437	222,448	2	77	1,437	111,224		Y
HVAC-30	x	x	11.25	1	54	1,437	77,598	2	27	1,437	38,799		Y
HVAC-31	x	x	11.25	1	40	1,437	56,857	2	20	1,437	28,428		Y
HVAC-32	x	x	36	1	132	1,437	189,684	2	66	1,437	94,842		Y
HVAC-33	x	x	12	1	50	1,437	71,850	2	25	1,437	35,925		Y
HVAC-34	x	x	2	1	12	1,437	17,244	2	6	1,437	8,622		Y
HVAC-35	x	x	12.5	1	44	1,437	63,174	2	22	1,437	31,587		Y
HVAC-36a	x	x	12.5	1	44	1,437	63,174	2	22	1,437	31,587		Y
HVAC-36b	x	x	12.5	1	44	1,437	63,174	2	22	1,437	31,587		Y
HVAC-36c	x	x	0	1	0	1,437		2	0	1,437			N
HVAC-36d	x	x	0	1	0	1,437		2	0	1,437			N
HVAC-36e	x	x	0	1	0	1,437		2	0	1,437			N
HVAC-37	x	x	6.11	1	29	1,437	42,144	2	15	1,437	21,072		Y
HVAC-38	x	x	30	1	106	1,437	151,618	2	53	1,437	75,809		Y

HVAC-39	x	x	8	1	28	1,437	40,431	2	14	1,437	20,216	Y
HVAC-40	x	x	6.25	1	22	1,437	31,587	2	11	1,437	15,794	Y
HVAC-41	x	x	0	1	117	1,437	168,129	2	59	1,437	84,065	Y
HVAC-42	x	x	0	1	117	1,437	168,129	2	59	1,437	84,065	Y
HVAC-43	x	x	0	1.75	76	1,437		2	66	1,437	HP	N
HVAC-44	x	x	3.75	1.75	8	1,437		2	7	1,437	HP	N
HVAC-45	x	x	3.75	1.75	8	1,437		2	7	1,437	HP	N
HVAC-46	x	x	3.75	1.75	8	1,437		2	7	1,437	HP	N
HVAC-47	x	x	5.5	1.75	11	1,437		2	10	1,437	HP	N
HVAC-48	x	x	5.5	1.75	11	1,437		2	10	1,437	HP	N
HVAC-49	x	x	5.5	1.75	11	1,437		2	10	1,437	HP	N
HVAC-50	x	x	3	1.75	6	1,437		2	5	1,437	HP	N
HVAC-51	x	x	3	1.75	6	1,437		2	5	1,437	HP	N
HVAC-52	x	x	6	1.75	12	1,437		2	11	1,437	HP	N
HVAC-53	x	x	6	1.75	12	1,437		2	11	1,437	HP	N
HVAC-54	x	x	6	1.75	12	1,437		2	11	1,437	HP	N
HVAC-55	x	x	6	1.75	12	1,437		2	11	1,437	HP	N
HVAC-56	x	x	7.5	1	26	1,437	37,904	2	13	1,437	18,952	Y
HVAC-57	x	x	0	1	60	1,437	86,220	2	30	1,437	43,110	Y
HVAC-58	x	x	49	2	86	1,437		2	86	1,437	GSHP	N
HVAC-59	x	x	3.5	1	7	1,437		2	4	1,437		N
Total							4,042,109				2,021,054	

RTU & AHU Replacements - Gas Conversion

Electric Cost ($/kWh)	0
Demand Cost ($/kW)	0
Thermal Cost ($/MMBtu)	0

Summary	Baseline	Proposed	Savings	$ Savings
kWh/yr	4,472,030	328,687	4,143,343	$ -
kW			-	$ -
MMBtu/yr	-	16,790	(16,790)	$ -
Total				$ -

Equipment Name	Equipment Manufacturer	Model Number	Capacity Tons	Existing EER	Each Month kW	Cooling EFLH	Cooling kWh Existing	New EER	Each Month kW	Cooling EFLH	Cooling kWh Proposed	Cooling Type	Replace?
HVAC-1	x	x	50	9	66.7	607	40,467	14	42.9	607	26,014	DX	Y
HVAC-2	x	x	15	9	20.0	607	12,140	14	12.9	607	7,804	DX	Y
HVAC-3	x	x	15	9	20.0	607	12,140	14	12.9	607	7,804	DX	Y
HVAC-4	x	x	30	9	40.0	607		14	25.7	607		DX	N
HVAC-5	x	x	15	9	20.0	607	12,140	14	12.9	607	7,804	DX	Y
HVAC-6	x	x	40	9	53.3	607	32,373	14	34.3	607	20,811	DX	Y
HVAC-7	x	x	40	9	53.3	607	32,373	14	34.3	607	20,811	DX	Y
HVAC-8	x	x	10	9	13.3	607		14	8.6	607		DX	N
HVAC-9	x	x	10	9	13.3	607		14	8.6	607		DX	N
HVAC-10	x	x	10	9	13.3	607		14	8.6	607		DX	N
HVAC-11	x	x	10	9	13.3	607		14	8.6	607		DX	N
HVAC-12	x	x	6	9	8.0	607		14	5.1	607		DX	N
HVAC-13	x	x	25	9	33.3	607	20,233	14	21.4	607	13,007	DX	Y
HVAC-14	x	x	25	9	33.3	607	20,233	14	21.4	607	13,007	DX	Y
HVAC-15	x	x	25	9	33.3	607	20,233	14	21.4	607	13,007	DX	Y
HVAC-16	x	x	25	9	33.3	607	20,233	14	21.4	607	13,007	DX	Y
HVAC-17	x	x	4	9	5.3	607	3,237	14	3.4	607	2,081	DX	Y
HVAC-18	x	x	15	9	20.0	607	12,140	14	12.9	607	7,804	DX	Y
HVAC-19	x	x	15	9	20.0	607	12,140	14	12.9	607	7,804	DX	Y
HVAC-20	x	x	15	9	20.0	607	12,140	14	12.9	607	7,804	DX	Y
HVAC-21	x	x	15	9	20.0	607	12,140	14	12.9	607	7,804	DX	Y
HVAC-22	x	x	15	9	20.0	607	12,140	14	12.9	607	7,804	DX	Y
HVAC-23	x	x	25	9	33.3	607	20,233	14	21.4	607	13,007	DX	Y
HVAC-24	x	x	25	9	33.3	607	20,233	14	21.4	607	13,007	DX	Y
HVAC-25	x	x	25	9	33.3	607	20,233	14	21.4	607	13,007	DX	Y
HVAC-26	x	x	25	9	33.3	607	20,233	14	21.4	607	13,007	DX	Y
HVAC-27	x	x	4	9	5.3	607	3,237	14	3.4	607	2,081	DX	Y
HVAC-28	x	x	17	9	23.0	607	13,955	14	14.8	607	8,971	DX	Y
HVAC-29	x	x	32	11	35.2	607	21,355	14	27.6	607	16,779	CW	Y
HVAC-30	x	x	11	11	12.3	607	7,450	14	9.6	607	5,853	CW	Y
HVAC-31	x	x	11	9	15.0	607	9,105	14	9.6	607	5,853	DX	Y
HVAC-32	x	x	36	9	48.0	607	29,136	14	30.9	607	18,730	DX	Y
HVAC-33	x	x	12	9	16.0	607	9,712	14	10.3	607	6,243	DX	Y
HVAC-34	x	x	2	9	2.7	607	1,619	14	1.7	607	1,041	DX	Y
HVAC-35	x	x	12.5	9	16.7	607	10,117	14	10.7	607	-		Y
HVAC-36a	x	x	12.5	9	16.7	607	10,117	14	10.7	607	-		Y
HVAC-36b	x	x	12.5	9	16.7	607	10,117	14	10.7	607	-		Y
HVAC-36c	x	x	0	9	0.0	607		14	0.0	607			N
HVAC-36d	x	x	0	9	0.0	607		14	0.0	607			N
HVAC-36e	x	x	0	9	0.0	607		14	0.0	607			N
HVAC-37	x	x	6	11	6.7	607		14	5.2	607		CW	N
HVAC-38	x	x	30	9	40.0	607	24,280	14	25.7	607	15,609	DX	Y
HVAC-39	x	x	8	9	10.7	607	6,475	14	6.9	607	4,162	DX	Y
HVAC-40	x	x	6	9	8.3	607	5,058	14	5.4	607	3,252	DX	Y
HVAC-41	x	x	0	9	0.0	607	-	14	0.0	607	-		Y
HVAC-42	x	x	0	9	0.0	607	-	14	0.0	607	-		Y
HVAC-43	x	x	0	9	0.0	607		14	0.0	607			N
HVAC-44	x	x	4	9	5.0	607		14	3.2	607		DX	N
HVAC-45	x	x	4	9	5.0	607		14	3.2	607		DX	N
HVAC-46	x	x	4	9	5.0	607		14	3.2	607		DX	N
HVAC-47	x	x	6	9	7.3	607		14	4.7	607		DX	N
HVAC-48	x	x	6	9	7.3	607		14	4.7	607		DX	N
HVAC-49	x	x	6	9	7.3	607		14	4.7	607		DX	N
HVAC-50	x	x	3	9	4.0	607		14	2.6	607		DX	N
HVAC-51	x	x	3	9	4.0	607		14	2.6	607		DX	N

HVAC-52	x	x	6	9	8.0	607		14	5.1	607		DX	N
HVAC-53	x	x	6	9	8.0	607		14	5.1	607		DX	N
HVAC-54	x	x	6	9	8.0	607		14	5.1	607		DX	N
HVAC-55	x	x	6	9	8.0	607		14	5.1	607		DX	N
HVAC-56	x	x	8	9	10.0	607	6,070	14	6.4	607	3,902	DX	Y
HVAC-57	x	x	0	9	0.0	607	-	14	0.0	607	-		Y
HVAC-58	x	x	49	9	65.3	607		14	42.0	607		WSHP	N
HVAC-59	x	x	4	9	4.7	607		14	3.0	607		DX	N
Total							535,239				328,687		

Equipment Name	Equipment Manufacturer	Model Number	Capacity Tons	Existing COP	Each Month kW	Heating EFLH	Heating kWh Existing	Gas Efficiency	Each Month MBH	Heating EFLH	Heating Proposed MMBtu	Heating Type	Replace?
HVAC-1	x	x	50	1	200	1,437	287,400	80%	682	1,437	1,226		Y
HVAC-2	x	x	15	1	53	1,437	75,809	80%	180	1,437	323		Y
HVAC-3	x	x	15	1	53	1,437	75,809	80%	180	1,437	323		Y
HVAC-4	x	x	30	1.75	60	1,437		80%	206	1,437		HP	N
HVAC-5	x	x	15	1	53	1,437	75,809	80%	180	1,437	323		Y
HVAC-6	x	x	40	1	200	1,437	287,400	80%	682	1,437	1,226		Y
HVAC-7	x	x	40	1	200	1,437	287,400	80%	682	1,437	1,226		Y
HVAC-8	x	x	10	1.75	40	1,437		80%	136	1,437		HP	N
HVAC-9	x	x	10	1.75	40	1,437		80%	136	1,437		HP	N
HVAC-10	x	x	10	1.75	40	1,437		80%	136	1,437		HP	N
HVAC-11	x	x	10	1.75	40	1,437		80%	136	1,437		HP	N
HVAC-12	x	x	6	1.75	25	1,437		80%	85	1,437		HP	N
HVAC-13	x	x	25	1	72	1,437	103,464	80%	246	1,437	441		Y
HVAC-14	x	x	25	1	72	1,437	103,464	80%	246	1,437	441		Y
HVAC-15	x	x	25	1	72	1,437	103,464	80%	246	1,437	441		Y
HVAC-16	x	x	25	1	72	1,437	103,464	80%	246	1,437	441		Y
HVAC-17	x	x	4	1	12	1,437	17,244	80%	41	1,437	74		Y
HVAC-18	x	x	15	1	53	1,437	75,809	80%	180	1,437	323		Y
HVAC-19	x	x	15	1	53	1,437	75,809	80%	180	1,437	323		Y
HVAC-20	x	x	15	1	53	1,437	75,809	80%	180	1,437	323		Y
HVAC-21	x	x	15	1	67	1,437	96,279	80%	229	1,437	411		Y
HVAC-22	x	x	15	1	67	1,437	96,279	80%	229	1,437	411		Y
HVAC-23	x	x	25	1	72	1,437	103,464	80%	246	1,437	441		Y
HVAC-24	x	x	25	1	72	1,437	103,464	80%	246	1,437	441		Y
HVAC-25	x	x	25	1	72	1,437	103,464	80%	246	1,437	441		Y
HVAC-26	x	x	25	1	72	1,437	103,464	80%	246	1,437	441		Y
HVAC-27	x	x	4	1	12	1,437	17,244	80%	41	1,437	74		Y
HVAC-28	x	x	17.2425	1	83	1,437	118,932	80%	282	1,437	507		Y
HVAC-29	x	x	32.25	1	155	1,437	222,448	80%	528	1,437	949		Y
HVAC-30	x	x	11.25	1	54	1,437	77,598	80%	184	1,437	331		Y
HVAC-31	x	x	11.25	1	40	1,437	56,857	80%	135	1,437	242		Y
HVAC-32	x	x	36	1	132	1,437	189,684	80%	450	1,437	809		Y
HVAC-33	x	x	12	1	50	1,437	71,850	80%	171	1,437	306		Y
HVAC-34	x	x	2	1	12	1,437	17,244	80%	41	1,437	74		Y
HVAC-35	x	x	12.5	1	44	1,437	63,174	80%	150	1,437	269		Y
HVAC-36a	x	x	12.5	1	44	1,437	63,174	80%	150	1,437	269		Y
HVAC-36b	x	x	12.5	1	44	1,438		180%	150	1,438			
HVAC-36c	x	x	0	1	0	1,439		280%	0	1,439			
HVAC-36d	x	x	0	1	0	1,440		380%	0	1,440			
HVAC-36e	x	x	0	1	0	1,441		480%	0	1,441			
HVAC-37	x	x	6.11	1	29	1,442		580%	100	1,442			N
HVAC-38	x	x	30	1	106	1,437	151,618	80%	360	1,437	647		Y
HVAC-39	x	x	8	1	28	1,437	40,431	80%	96	1,437	172		Y
HVAC-40	x	x	6.25	1	22	1,437	31,587	80%	75	1,437	135		Y
HVAC-41	x	x	0	1	117	1,437	168,129	80%	399	1,437	717		Y
HVAC-42	x	x	0	1	117	1,437	168,129	80%	399	1,437	717		Y
HVAC-43	x	x	0	1.75	76	1,437		80%	258	1,437		HP	N
HVAC-44	x	x	3.75	1.75	8	1,437		80%	26	1,437		HP	N
HVAC-45	x	x	3.75	1.75	8	1,437		80%	26	1,437		HP	N
HVAC-46	x	x	3.75	1.75	8	1,437		80%	26	1,437		HP	N
HVAC-47	x	x	5.5	1.75	11	1,437		80%	38	1,437		HP	N
HVAC-48	x	x	5.5	1.75	11	1,437		80%	38	1,437		HP	N
HVAC-49	x	x	5.5	1.75	11	1,437		80%	38	1,437		HP	N
HVAC-50	x	x	3	1.75	6	1,437		80%	21	1,437		HP	N
HVAC-51	x	x	3	1.75	6	1,437		80%	21	1,437		HP	N
HVAC-52	x	x	6	1.75	12	1,437		80%	41	1,437		HP	N
HVAC-53	x	x	6	1.75	12	1,437		80%	41	1,437		HP	N
HVAC-54	x	x	6	1.75	12	1,437		80%	41	1,437		HP	N
HVAC-55	x	x	6	1.75	12	1,437		80%	41	1,437		HP	N
HVAC-56	x	x	7.5	1	26	1,437	37,904	80%	90	1,437	162		Y
HVAC-57	x	x	0	1	60	1,437	86,220	80%	205	1,437	368		Y

HVAC-58	x	x	49	2	86	1,437		80%	294	1,437		GSHP	N
HVAC-59	x	x	3.5	1	7	1,437		80%	24	1,437			N
Total							3,936,791				16,790		

Kitchen Equipment Reaplcement & Gas Conversion

Summary	Baseline	Proposed	Savings	$ Savings
kWh/yr	335,727	-	335,727	
kW	-	-	-	
MMBtu/yr	-	1,382	(1,382)	
Total				$ -

Equipment	Quantity	Existing kW	Proposed MBH	EFLH	Existing kWh	Proposed MMBtu
40 gal kettle	3	18.0	100	2,190	39,420	219.0
60 gal kettle	1	18.0	100	2,190	39,420	219.0
40 gal skillet	3	15.3	100	2,190	33,507	219.0
convection oven	5	18.0	60	2,190	39,420	131.4
donut fryer	2	24.0	76	2,190	52,560	166.4
dishwasher	1	60.0	195	2,190	131,400	427.1
TOTAL		**153.3**	**631**		**335,727**	**1,381.9**

Domestic Hot Water Heaters - Gas Conversion

Summary	Baseline	Proposed	Savings	$ Savings
kWh/yr	331,538	-	331,538	
kW	-	-	-	
MMBtu/yr	-	1,191	(1,191)	
Total				$ -

UEF-baseline	1.0
UEF-proposed	2.2
Adjustment Factor	1.16
Gal/Yr	1,947,000
Temp. Rise (*F)	70
kWh Baseline	331,538
MMBtu Proposed	1,191

Chiller Upgrade

Summary	Baseline	Proposed	Savings	$ Savings
kWh/yr	47,407	17,239	30,168	
kW	-	-	-	
MMBtu/yr	-	-	-	
Total				$ -

Chiller Upgrade

Cooling EFLH	607
Chiller Tons	71
Existing Chiller IPLV	1.1
Proposed Chiller IPLV	0.4
Baseline kWh	47,407
Proposed kWh	17,239
kWh Savings	30,168

Chiller / Chilled Water Loop Expansion

Summary	Baseline	Proposed	Savings	$ Savings
kWh/yr	209,813	65,961	143,852	
kW	-	-	-	
MMBtu/yr	-	-	-	
Total				$ -

Chiller Upgrade

Cooling EFLH	607
Adtl Chiller Tons	201
Existing IPLV (DX)	1.3
Proposed Chiller IPLV	0.4
Baseline kWh	209,813
Proposed kWh	65,961
kWh Savings	143,852

Engine Block Heaters

Summary	Baseline	Proposed	Savings	$ Savings
kWh/yr	57,480	-	57,480	
kW	-	-	-	
MMBtu/yr	-	-	-	
Total				$ -

Remove Redundant Heaters	
No. of heaters	8
Heater kW	5
Heating EFLH	1,437
Baseline kWh	57,480
Proposed kWh	-

POWERSMITHS
Socomec Group

The ESP Calculator ™

Preliminary Energy Savings & Payback Calculator

Proposed Powersmiths OPAL Transformer	E-Saver-80R

Transformer Count	Location	Transformer ID	Baseline kVA	Replacement kVA	Replace	Baseline Total Annual kWh Losses	Powersmiths Total Annual kWh Losses	Annual Savings with Powersmiths: kW Reduction (Peak)	Annual Savings with Powersmiths: Total kWh Savings
1	SCI Mercer		10	10	1	2,406	357	0.234	2,049
2	SCI Mercer		10	10	1	2,406	357	0.234	2,049
3	SCI Mercer		10	10	1	2,406	357	0.234	2,049
4	SCI Mercer		15	15	1	2,939	434	0.286	2,505
5	SCI Mercer		15	15	1	2,939	434	0.286	2,505
6	SCI Mercer		30	30	1	4,199	612	0.410	3,587
7	SCI Mercer		30	30	1	4,199	612	0.410	3,587
8	SCI Mercer		30	30	1	4,199	612	0.410	3,587
9	SCI Mercer		30	30	1	4,199	612	0.410	3,587
10	SCI Mercer		30	30	1	4,199	612	0.410	3,587
11	SCI Mercer		30	30	1	4,199	612	0.410	3,587
12	SCI Mercer		30	30	1	4,199	612	0.410	3,587
13	SCI Mercer		30	30	1	4,199	612	0.410	3,587
14	SCI Mercer		30	30	1	4,199	612	0.410	3,587
15	SCI Mercer		45	45	1	5,782	791	0.570	4,991
16	SCI Mercer		45	45	1	5,782	791	0.570	4,991
17	SCI Mercer		45	45	1	5,782	791	0.570	4,991
18	SCI Mercer		45	45	1	5,782	791	0.570	4,991
19	SCI Mercer		45	45	1	5,782	791	0.570	4,991
20	SCI Mercer		45	45	1	5,782	791	0.570	4,991
21	SCI Mercer		45	45	1	5,782	791	0.570	4,991
22	SCI Mercer		75	75	1	7,771	1,109	0.760	6,662

23	SCI Mercer		**75**	**75**	**1**	7,771	1,109	0.760	6,662
24	SCI Mercer		**75**	**75**	**1**	7,771	1,109	0.760	6,662
25	SCI Mercer		**75**	**75**	**1**	7,771	1,109	0.760	6,662
26	SCI Mercer		**75**	**75**	**1**	7,771	1,109	0.760	6,662
27	SCI Mercer		**75**	**75**	**1**	7,771	1,109	0.760	6,662
28	SCI Mercer		**75**	**75**	**1**	7,771	1,109	0.760	6,662
29	SCI Mercer		**75**	**75**	**1**	7,771	1,109	0.760	6,662
30	SCI Mercer		**75**	**75**	**1**	7,771	1,109	0.760	6,662
31	SCI Mercer		**75**	**75**	**1**	7,771	1,109	0.760	6,662
32	SCI Mercer		**75**	**75**	**1**	7,771	1,109	0.760	6,662
33	SCI Mercer		**75**	**75**	**1**	7,771	1,109	0.760	6,662
34	SCI Mercer		**75**	**75**	**1**	7,771	1,109	0.760	6,662
35	SCI Mercer		**112.5**	**112.5**	**1**	10,794	1,710	1.037	9,084
36	SCI Mercer		**150**	**150**	**1**	13,799	2,223	1.322	11,576
37	SCI Mercer		**150**	**150**	**1**	13,799	2,223	1.322	11,576
38	SCI Mercer		**175**	**175**	**1**	13,149	1,673	1.310	11,476
39	SCI Mercer		**225**	**225**	**1**	16,589	2,812	1.573	13,777
40	SCI Mercer		**225**	**225**	**1**	16,589	2,812	1.573	13,777
41	SCI Mercer		**225**	**225**	**1**	16,589	2,812	1.573	13,777
					41	**293,692**	**43,666**	**28.542**	**250,026**

Summary Sheet - Utility Savings Analysis

ECM #6 - Domestic Plumbing Fixture Upgrades - Base SOW

Date	Company	Facility Name and Location
August 7, 2023	ESCO RFP	SCI Mercer, PA

Inmate Population:

Total	1097
Cell Population	970
Dorm Population	127

Staff Population:

Total	350
Security Staff	275
Admin Staff	75

Ground Water Temp (°F)	50
Affected Water Rate ($/kGal)	$9.1500
Affected Sewer Rate ($/kGal)	$0.0000
Affected Combined Rate ($/kGal)	$9.1500
Fuel Rate per 1 MMBTU (10 therms)	$5.0000
Total Water Consumption (Gal/Yr)	52,930,981

Affected Fixture Water Consumption (%)	28.7%
Affected Fixture Water Consumption (Gal/Yr)	15,195,557
Affected Fixture Water Savings (%)	14.8%
Affected Fixture Water Savings (Gal/Yr)	7,825,264

Leaking Valve Water Savings (%)	0.00%
Leaking Valve Water Savings (Gal/Yr)	-
Leaking Valve Cost Savings ($)	$ -

Total Water Savings (Gal/Yr)	7,825,264
Total Water Savings ($/Yr)	$ 71,601
Total Fuel Savings (Therm/Yr)	35,956
Total Fuel Savings ($/Yr)	$ 17,978
Total Savings	$ 89,579

Facility Totals:

I-CON Electronic Combi Retrofit (T+L)	0
I-CON Electronic Toilet Retrofit	0
Shower Nozzle	106
I-CON Electronic Lav Retrofit	0
I-CON Electronic Urinal Retrofit	0
I-CON Stainless Combi and Electronic Retrofit	0
I-CON Stainless Toilet and Electronic Retrofit	0
I-CON Stainless Shower and Electronic Retrofit	0
I-CON Stainless Lav and Electronic Retrofit	0
I-CON Stainless Urinal and Electronic Retrofit	0
I-CON Electronic Mop Sink Retrofit	0
I-CON Electronic Specialty Valve	0
I-CON Envisage Computer Station	0
Stainless Toilet and Commercial Valve	0
Porcelain Toilet and Commercial Valve	86
Commercial Toilet Valve/Diaphragm/Prolast Kit	0
Porcelain Tank Toilet	0
Shower Nozzle	20
Stainless Lav and Commercial Valve	0
Commercial Lav Valve	0
Commercial Lav Aerator	121
Commercial Kitchen Stem/Valve/Body	0
Commercial Kitchen Aerator	8
Stainless Urinal and Commercial Valve	0
Porcelain Urinal and Commercial Valve	0
Commercial Urinal Valve/Diaphragm/Prolast Kit	0
Ice Machine Head Replacement	0
Ozone Laundry System	0
Mixing Valve	0
**Placeholder1	0
**Placeholder2	0

Inmate (Cell) Valve/Nozzle Totals:

I-CON Electronic Toilet Retrofit	0
Shower Nozzle	106
I-CON Electronic Lav Retrofit	0
I-CON Electronic Urinal Retrofit	0
I-CON Envisage Computer Station	0

Inmate Dorm Valve/Nozzle Totals:

I-CON Electronic Toilet Retrofit	0
Shower Nozzle	0
I-CON Electronic Lav Retrofit	0
I-CON Electronic Mop Sink Retrofit	0
I-CON Electronic Specialty Valve	0
I-CON Envisage Computer Station	0
Toilet (Fixture, Tank, Valve, Diaphragm, or Prolast Kit)	34
Faucet/Kitchen (Valve, Stem, or Aerator)	56
Urinal (I-CON, Fixture, Valve, Diaphragm, or Prolast Kit)	0
Shower (Head or Nozzle)	20
Ice Machine Head Replacement	0
Mixing Valve	0
**Placeholder1	0

Staff Valve/Nozzle Totals:

Toilet (Fixture, Valve, Diaphragm, or Prolast Kit)	52
Shower (Head or Nozzle)	0
Faucet (Valve, Stem, or Aerator)	73
Kitchen (Valve, Stem, or Aerator)	0
Urinal (Fixture, Valve, Diaphragm, or Prolast Kit)	0
Porcelain Tank Toilet	0
Ice Machine Head Replacement	0
Ozone Laundry System	0
**Placeholder2	0

Proprietary and Confidential
Intelligent Conservation Systems, Inc.

WATER CONSERVATION ANALYSIS - Inmate
ESCO RFP/SCI Mercer, PA

August 7, 2023

Facility:	**SCI Mercer, PA / Inmate**
#inmate	970
Annual Occupancy	100%
# of Days / Year	365
Occupied Days/Year	365
Water Cost /1000 Gallons	$9.15
Fuel / 1M Units	$5.00
Water Temp in Water Heater	50
Water Temp out of Water Heater	140
Mixed Water from Temp.Valve	105
Shower Retrofit Hot Water Percentage	100%

# Of Devices To Be Installed	
I-CON Electronic Toilet Retrofit	0
Shower Nozzle	106
I-CON Electronic Lav Retrofit	0
Kitch Aerators	0
I-CON Electronic Urinal Retrofit	0
Flushometer W.C. Open Area	0
I-CON Envisage Computer Station	0

Inmate Usage Per Day	
Flush Valve Flushes Per Fixture Before (Cells)	30
Flush Valve Flushes Per Fixture After (Cells)	30
Shower Minutes Per User Before	11
Shower Minutes Per User After	11
Lavatory Minutes Per User Before	4
Lavatory Minutes Per User After	4
Kitchen Aerator Minutes Per Fixture	0
Urinal Flushes Per Fixture	0
Flushometer W.C. Flushes Per Fixture	0

Device	Gallon Flow Before	Gallon Flow After	Per Day	Gallons Saved	Tenants Inmate	Occupied Days Per Year	# of Devices	Gallons Saved Per Year	Water Cost Per 1000 Gins
I-CON Electronic Toilet Retrofit	3.30	3.30	30	0.00	970	365	0	-	$9.15
Shower Nozzle	3.00	1.50	11	1.50	970	365	106	5,841,825	$9.15
I-CON Electronic Lav Retrofit	0.50	0.50	4	0.00	970	365	0	-	$9.15
Kitch Aerators	0.00	0.00	0	0.00	970	365	0	-	$9.15
I-CON Electronic Urinal Retrofit	0.00	0.00	0	0.00	970	365	0	-	$9.15
Flushometer W.C. Open Area	0.00	0.00	0	0.00	970	365	0	-	$9.15
I-CON Envisage Computer Station							0		
								5,841,825	

Proprietary and Confidential
Intelligent Conservation Systems, Inc.

August 7, 2023

Water Conservation Analysis - Inmate
ESCO RFP/SCI Mercer, PA

FACILITY INFORMATION:

Number of Inmates		970
Water rate/1,000 Gallons	$	9.15
Cold Water Temp into Heater		50
Hot Water Temp out of Heater		140
Mixed Water from Tempering Valve		105
Shower Retrofit Hot Water Percentage		100%
Fuel/1M BTU		$5.00

AVERAGE USAGE PER DAY:

Flush Valves Before	30	flushes/per unit
Flush Valves After	30	flushes/per unit
Showerheads Before	11	minutes/per user
Showerheads After	11	minutes/per user
Lavatory Sinks Before	4	minutes/per user
Lavatory Sinks After	4	minutes/per user
Kitchen Sinks	0	minutes/per unit
Urinals	0	flushes/per unit
Flush Valves	0	flushes/per unit

GALLONS USED PER DEVICE:

DEVICES	BEFORE RETROFIT	AFTER RETROFIT
Flush Valves Per Flush	3.30	3.30
Showerheads Per Minute	3.00	1.50
Lavatory Aerators Per Minute	0.50	0.50
Kitchen Aerators Per Minute	0.00	0.00
Urinals Per Flush	0.00	0.00
Flush Valves Per Flush	0.00	0.00

NUMBER OF DEVICES TO BE INSTALLED:

I-CON Electronic Toilet Retrofit	0
Shower Nozzle	106
I-CON Electronic Lav Retrofit	0
Kitch Aerators	0
I-CON Electronic Urinal Retrofit	0
Flushometer W.C. Open Area	0

TOTAL GALLONS USED PER DEVICE:

DEVICES	BEFORE RETROFIT		AFTER RETROFIT		SAVINGS
Flush Valves Per Flush	(30)X(3.3)X(0)X(365) =	-	(30)X(3.3)X(0)X(365) =	-	-
Showerheads Per Minute	(11)X(3)X(970)X(365) =	11,683,650	(11)X(1.5)X(970)X(365) =	5,841,825	5,841,825
Lavatory Aerators Per Minute	(4)X(0.5)X(970)X(365) =	-	(4)X(0.5)X(970)X(365) =	-	-
Kitchen Aerators Per Minute	(0)X(0)X(0)X(365) =	-	(0)X(0)X(0)X(365) =	-	-
Urinals Per Flush	(0)X(0)X(0)X(365) =	-	(0)X(0)X(0)X(365) =	-	-
Flush Valves Per Flush	(0)X(0)X(0)X(365) =	-	(0)X(0)X(0)X(365) =	-	-
TOTAL USAGE		11,683,650		5,841,825	5,841,825

TOTAL MMBTUS USED PER DEVICE:

	MMBTUS BEFORE RETROFIT		MMBTUS AFTER RETROFIT		SAVINGS
Fuel for Hot Water Showers	(105-50)X(3)X(1)X(11)X(970)X(8.34)X(365)/1M/.85 =	6,305	(105-50)X(1.5)X(1)X(11)X(970)X(8.34)X(365)/1M/.85 =	3,153	3,153
Fuel for Hot Water Lavatories	(105-50)X(0.5/2)X(4)X(970)X(8.34)X(365)/1M/.85 =	-	(105-50)X(0.5/2)X(4)X(970)X(8.34)X(365)/1M/.85 =	-	-
Fuel for Hot Water Kitchen	(105-50)X(0)X(0)X(0)X(8.34)X(365)/1M =	-	(105-50)X(0)X(0)X(0)X(8.34)X(365)/1M =	-	-
TOTAL SAVED		6,305		3,153	3,153

SUMMARY:

Total Gallons of Water Saved After Installation	
Total 1,000 Gallon Water Units	
Water Savings Per Year	5,842 X $9.15/1000 Gallons =
Fuel Savings Per Year	3,153 MMBTUS X $5.00/MMBTUS =
TOTAL SAVINGS PER YEAR	

Proprietary and Confidential
Intelligent Conservation Systems, Inc.

Water Conservation Analysis - Inmate Dorm
ESCO RFP/SCI Mercer, PA

August 7, 2023

Facility:	**SCI Mercer, PA / Inmate Dorm**
# of Dorms	0
#inmate	127
Annual Occupancy	100%
# of Days / Year	365
Occupied Days/Year	365
Water Cost /1000 Gallons	$9.15
Fuel / 1M Units	$5.00
Water Temp in Water Heater	50
Water Temp out of Water Heater	140
Mixed Water from Temp.Valve	105
Shower Retrofit Hot Water Percentage	100%
LF Showerhead Hot Water Percentage	100%

# Of Devices To Be Installed	
I-CON Electronic Toilet Retrofit	0
Shower Nozzle	0
I-CON Electronic Lav Retrofit	0
I-CON Electronic Mop Sink Retrofit	0
I-CON Electronic Specialty Valve	0
Toilet (Fixture, Tank, Valve, Diaphragm, or Prolast Kit)	34
Faucet/Kitchen (Valve, Stem, or Aerator)	56
Urinal (I-CON, Fixture, Valve, Diaphragm, or Prolast K	0
Shower (Head or Nozzle)	20
I-CON Envisage Computer Station	0

Inmate Usage Per Day	
Flush Valve Flushes Per Fixture Before	0
Flush Valve Flushes Per Fixture After	0
Shower Minutes Per User Before	0
Shower Minutes Per User After	0
Lavatory Minutes Per User Before	0
Lavatory Minutes Per User After	0
Mop Sink Minutes Per Fixture Before	0
Mop Sink Minutes Per Fixture After	0
I-CON Electronic Specialty Valve Minutes Per Fixture Before	0
I-CON Electronic Specialty Valve Minutes Per Fixture After	0
LF Toilet Flushes Per Fixture	20
LF Aerator Minutes Per Fixture	12
LF Urinal Flushes Per Fixture	0
LF Showerhead Minutes Per User	11

Device	Gallon Flow Before	Gallon Flow After	Usage Per Day (Pre)	Gallons Saved	Tenants Inmate	Occupied Days Per Year	# of Devices	Gallons Saved Per Year	Water Cost Per 1000 Glns
I-CON Electronic Toilet Retrofit	0.00	0.00	0	0.00	127	365	0	-	$9.15
Shower Nozzle	0.00	0.00	0	0.00	127	365	0	-	$9.15
I-CON Electronic Lav Retrofit	0.00	0.00	0	0.00	127	365	0	-	$9.15
I-CON Electronic Mop Sink Retrofit	0.00	0.00	0	0.00	127	365	0	-	$9.15
I-CON Electronic Specialty Valve	0.00	0.00	0	0.00	127	365	0	-	$9.15
Toilet (Fixture, Tank, Valve, Diaphragm, or Pro	3.50	1.30	20	2.20	127	365	34	546,040	$9.15
Faucet/Kitchen (Valve, Stem, or Aerator)	2.20	0.64	12	1.56	127	365	56	382,637	$9.15
Urinal (I-CON, Fixture, Valve, Diaphragm, or Pr	0.00	0.00	0	0.00	127	365	0	-	$9.15
Shower (Head or Nozzle)	2.50	1.50	11	1.00	127	365	20	509,905	$9.15
I-CON Envisage Computer Station							0		
								1,438,582	

Proprietary and Confidential
Intelligent Conservation Systems, Inc.

Water Conservation Analysis - Inmate Dorm
ESCO RFP/SCI Mercer, PA

August 7, 2023

FACILITY INFORMATION:

Number of Dorms	0
Number of Inmates	127
Water rate/1,000 Gallons	$9.15
Cold Water Temp into Heater	50
Hot Water Temp out of Heater	140
Mixed Water from Tempering Valve	105
Shower Retrofit Hot Water Percentage	100%
LF Showerhead Hot Water Percentage	100%
Fuel/1M BTU	$5.00

AVERAGE USAGE PER DAY:

Flush Valve Flushes Per Fixture Before	0	flushes/per fixture
Flush Valve Flushes Per Fixture After	0	flushes/per fixture
Shower Minutes Per User Before	0	minutes/per user
Shower Minutes Per User After	0	minutes/per user
Lavatory Minutes Per User Before	0	minutes/per user
Lavatory Minutes Per User After	0	minutes/per user
Mop Sink Minutes Per Fixture Before	0	minutes/per fixture
Mop Sink Minutes Per Fixture After	0	minutes/per fixture
I-CON Electronic Specialty Valve Minutes Per Fixture Before	0	minutes/per fixture
I-CON Electronic Specialty Valve Minutes Per Fixture After	0	minutes/per fixture
LF Toilet Flushes Per Fixture	20	flushes/per fixture
LF Aerator Minutes Per Fixture	12	minutes/per fixture
LF Urinal Flushes Per Fixture	0	flushes/per fixture
LF Showerhead Minutes Per User	11	minutes/per user

GALLONS USED PER DEVICE:

DEVICES	BEFORE RETROFIT	AFTER RETROFIT
Flush Valves Per Flush	0.00	0.00
Shower Per Minute	0.00	0.00
Lavatory Aerators Per Minute	0.00	0.00
Mop Sinks Per Minute	0.00	0.00
Garden Hoses Per Minute	0.00	0.00
LF Flush Valves Per Flush	3.50	1.30
LF Faucet Aerators Per Minute	2.20	0.64
LF Urinals Per Flush	0.00	0.00
LF Showerheads Per Minute	2.50	1.50

NUMBER OF DEVICES TO BE INSTALLED:

I-CON Electronic Toilet Retrofit	0
Shower Nozzle	0
I-CON Electronic Lav Retrofit	0
I-CON Electronic Mop Sink Retrofit	0
I-CON Electronic Specialty Valve	0
Toilet (Fixture, Tank, Valve, Diaphra	34
Faucet/Kitchen (Valve, Stem, or Aer	56
Urinal (I-CON, Fixture, Valve, Diaphı	0
Shower (Head or Nozzle)	20
I-CON Envisage Computer Station	0

TOTAL GALLONS USED PER DEVICE:

DEVICES	BEFORE RETROFIT		AFTER RETROFIT		SAVINGS
I-CON Electronic Toilet Retrofit	(0)X(0)X(0)X(365) =	-	(0)X(0)X(0)X(365) =	-	-
Shower Nozzle	(0)X(0)X(127)X(365) =	-	(0)X(0)X(127)X(365) =	-	-
I-CON Electronic Lav Retrofit	(0)X(0)X(127)X(365) =	-	(0)X(0)X(127)X(365) =	-	-
I-CON Electronic Mop Sink Retrofit	(0)X(0)X(0)X(365) =	-	(0)X(0)X(0)X(365) =	-	-
I-CON Electronic Specialty Valve	(0)X(0)X(0)X(365) =	-	(0)X(0)X(0)X(365) =	-	-
Toilet (Fixture, Tank, Valve, Diaphragm, or Prolast Kit)	(20)X(3.5)X(34)X(365) =	868,700	(20)X(1.3)X(34)X(365) =	322,660	546,040
Faucet/Kitchen (Valve, Stem, or Aerator)	(12)X(2.2)X(56)X(365) =	539,616	(12)X(0.64)X(56)X(365) =	156,979	382,637
Urinal (I-CON, Fixture, Valve, Diaphragm, or Prolast Kit)	(0)X(0)X(0)X(365) =	-	(0)X(0)X(0)X(365) =	-	-
Shower (Head or Nozzle)	(11)X(2.5)X(127)X(365) =	1,274,763	(11)X(1.5)X(127)X(365) =	764,858	509,905
TOTAL USAGE		2,683,079		1,244,497	1,438,582

TOTAL MMBTUS USED PER DEVICE:

	MMBTUS BEFORE RETROFIT		MMBTUS AFTER RETROFIT		SAVINGS
Fuel for Hot Water Shower Nozzle	(105-50)X(0)X(1)X(0)X(127)X(8.34)X(365)/1M/.85 =	-	(105-50)X(0)X(1)X(0)X(127)X(8.34)X(365)/1M/.85 =	-	-
Fuel for Hot Water I-CON Electronic Lav Retrofit	(105-50)X(0/2)X(0)X(127)X(8.34)X(365)/1M/.85 =	-	(105-50)X(0/2)X(0)X(127)X(8.34)X(365)/1M/.85 =	-	-
Fuel for Hot Water I-CON Electronic Mop Sink Retrofit	(105-50)X(0/2)X(0)X(0)X(8.34)X(365)/1M/.85 =	-	(105-50)X(0/2)X(0)X(0)X(8.34)X(365)/1M/.85 =	-	-
Fuel for Hot Water Faucet/Kitchen (Valve, Stem, or Aerator)	(105-50)X(2.2/2)X(12)X(56)X(8.34)X(365)/1M/.85 =	146	(105-50)X(0.64/2)X(12)X(56)X(8.34)X(365)/1M/.85 =	42	103
Fuel for Hot Water Shower (Head or Nozzle)	(105-50)X(2.5)X(1)X(11)X(127)X(8.34)X(365)/1M/.85 =	688	(105-50)X(1.5)X(1)X(11)X(127)X(8.34)X(365)/1M/.85 =	413	275
TOTAL SAVED		834		455	378

SUMMARY:

Total Gallons of Water Saved After Installation	
Total 1,000 Gallon Water Units	
Water Savings Per Year	1,439 X $9.15/1000 Gallons =
Fuel Savings Per Year	378 MMBTUS X $5.00/MMBTUS =
TOTAL SAVINGS PER YEAR	

Proprietary and Confidential
Intelligent Conservation Systems, Inc.

Water Conservation Analysis - Staff
ESCO RFP/SCI Mercer, PA

August 7, 2023

Facility:	**SCI Mercer, PA / Staff**
# of Staff Areas	0
#Staff	350
Annual Occupancy	67%
# of Days / Year	365
Occupied Days/Year	244.55
Water Cost /1000 Gallons	$9.15
Fuel / 1M Units	$5.00
Water Temp in Water Heater	50
Water Temp out of Water Heater	140
Mixed Water from Temp.Valve	105

# Of Devices To Be Installed	
Toilet (Fixture, Valve, Diaphragm, or Prolast Ki	52
Shower (Head or Nozzle)	0
Faucet (Valve, Stem, or Aerator)	73
Kitchen (Valve, Stem, or Aerator)	0
Urinal (Fixture, Valve, Diaphragm, or Prolast K	0
Porcelain Tank Toilet	0

Staff Usage Per Day	
LF Toilet Flushes Per Fixture	12
LF Showerhead Minutes Per User	0
LF Aerator Minutes Per User	2
Kitchen Aerator Minutes Per User	0
LF Urinal Flushes Per Fixture	0
LF Toilet (Tank) Flushes Per Fixture	0

Device	Gallon Flow Before	Gallon Flow After	Per Day	Gallons Saved	Tenants Staff	Occupied Days Per Year	# of Devices	Gallons Saved Per Year	Water Cost Per 1000 Glns
Toilet (Fixture, Valve, Diaphragm, or Prolast Ki	3.30	1.30	12	2.00	350	244.55	52	305,198	$9.15
Shower (Head or Nozzle)	0.00	0.00	0	0.00	350	244.55	0	-	$9.15
Faucet (Valve, Stem, or Aerator)	1.90	0.50	2	1.40	350	244.55	73	239,659	$9.15
Kitchen (Valve, Stem, or Aerator)	0.00	0.00	0	0.00	350	244.55	0	-	$9.15
Urinal (Fixture, Valve, Diaphragm, or Prolast K	0.00	0.00	0	0.00	350	244.55	0	-	$9.15
Porcelain Tank Toilet	0.00	0.00	0	0.00	350	244.55	0	-	$9.15
								544,857	

Proprietary and Confidential
Intelligent Conservation Systems, Inc.

August 7, 2023

Water Conservation Analysis - Staff
ESCO RFP/SCI Mercer, PA

FACILITY INFORMATION:

Number of Staff Areas	0
Number of Staff	350
Water Rate/1,000 Gallons	$9.15
Cold Water Temp Into Heater	50
Hot Water Temp Out of Heater	140
Mixed Water from Tempering Valve	105
Fuel/1M BTU	$5.00

AVERAGE USAGE PER DAY:

Toilet (Fixture, Valve, Diapl	12	flushes/per unit
Shower (Head or Nozzle)	0	minutes/per staff
Faucet (Valve, Stem, or Aer	2	minutes/per staff
Kitchen (Valve, Stem, or Ae	0	minutes/per unit
Urinal (Fixture, Valve, Diapl	0	minutes/per unit
Porcelain Tank Toilet	0	flushes/per unit

GALLONS USED PER DEVICE:

DEVICES	BEFORE RETROFIT	AFTER RETROFIT
Flush Valves per Flush	3.30	1.30
Showerheads Per Minute	0.00	0.00
Lavatory Aerators Per Minute	1.90	0.50
Kitchen Aerators Per Minute	0.00	0.00
Urinals Per Flush	0.00	0.00
Flush Valves (Tank) Per Flush	0.00	0.00

NUMBER OF DEVICES TO BE INSTALLED:

Toilet (Fixture, Valve, Diapl	52
Shower (Head or Nozzle)	0
Faucet (Valve, Stem, or Aer	73
Kitchen (Valve, Stem, or Ae	0
Urinal (Fixture, Valve, Diapl	0
Porcelain Tank Toilet	0

TOTAL GALLONS USED PER DEVICE:

DEVICES	BEFORE RETROFIT		AFTER RETROFIT		SAVINGS
Flush Valves Per Flush	(12)X(3.3)X(52)X(244.55) =	503,577	(12)X(1.3)X(52)X(244.55) =	198,379	305,198
Showerheads Per Minutes	(0)X(0)X(350)X(244.55) =	-	(0)X(0)X(350)X(244.55) =	-	-
Lavatory Aerators Per Minute	(2)X(1.9)X(350)X(244.55) =	325,252	(2)X(0.5)X(350)X(244.55) =	85,593	239,659
Kitchen Aerators Per Minute	(0)X(0)X(0)X(244.55) =	-	(0)X(0)X(0)X(244.55) =	-	-
Urinals Per Flush	(0)X(0)X(0)X(244.55) =	-	(0)X(0)X(0)X(244.55) =	-	-
Flush Valves (Tank) Per Flush	(0)X(0)X(0)X(244.55) =	-	(0)X(0)X(0)X(244.55) =	-	-
TOTAL USAGE		828,829		283,971	544,857

TOTAL MMBTUS USED PER DEVICE:

	MMBTUS BEFORE RETROFIT		MMBTUS AFTER RETROFIT		SAVINGS
Fuel for Hot Water Shower (Head or Nozzle)	(105-50)X(0/2)X(0)X(350)X(8.34)X(244.55)/1M/.85 =	-	(105-50)X(0/2)X()X(350)X(8.34)X(244.55)/1M/.85 =	-	-
Fuel for Hot Water Faucet (Valve, Stem, or Aerator)	(105-50)X(1.9/2)X(2)X(350)X(8.34)X(244.55)/1M/.85 =	88	(105-50)X(0.5/2)X()X(350)X(8.34)X(244.55)/1M/.85 =	23	65
Fuel for Hot Water Kitchen (Valve, Stem, or Aerator)	(105-50)X(0)X(0)X(0)X(8.34)X(244.55)/1M =	-	(105-50)X(0)X(0)X(0)X(8.34)X(244.55)/1M =	-	-
TOTAL SAVED		88		23	65

SUMMARY:

Total Gallons of Water Saved After Installation	
Total 1,000 Gallon Water Units	
Water Savings Per Year	545 X $9.15/1000 Gallons =
Fuel Savings Per Year	65 MMBTUS X $5.00/MMBTUS =
TOTAL SAVINGS PER YEAR	

Proprietary and Confidential
Intelligent Conservation Systems, Inc.

Summary Sheet - Utility Savings Analysis

ECM #7 - Inmate Plumbing Fixture Controls - Base SOW

Date	Company	Facility Name and Location
August 7, 2023	ESCO RFP	SCI Mercer, PA

Inmate Population:

Total	1097
Cell Population	970
Dorm Population	127

Staff Population:

Total	350
Security Staff	275
Admin Staff	75

Ground Water Temp (°F)	50
Affected Water Rate ($/kGal)	$9.1500
Affected Sewer Rate ($/kGal)	$0.0000
Affected Combined Rate ($/kGal)	$9.1500
Fuel Rate per 1 MMBTU (10 therms)	$5.0000
Total Water Consumption (Gal/Yr)	52,930,981

Affected Fixture Water Consumption (%)	41.6%
Affected Fixture Water Consumption (Gal/Yr)	22,042,350
Affected Fixture Water Savings (%)	28.9%
Affected Fixture Water Savings (Gal/Yr)	15,273,790

Leaking Valve Water Savings (%)	0.00%
Leaking Valve Water Savings (Gal/Yr)	-
Leaking Valve Cost Savings ($)	$ -

Total Water Savings (Gal/Yr)	15,273,790
Total Water Savings ($/Yr)	$ 139,755
Total Fuel Savings (Therm/Yr)	-
Total Fuel Savings ($/Yr)	$ -
Total Savings	$ 139,755

Facility Totals:

I-CON Electronic Combi Retrofit (T+L)	0
I-CON Electronic Toilet Retrofit	610
I-CON Electronic Shower Retrofit	0
I-CON Electronic Lav Retrofit	0
I-CON Electronic Urinal Retrofit	0
I-CON Stainless Combi and Electronic Retrofit	0
I-CON Stainless Toilet and Electronic Retrofit	0
I-CON Stainless Shower and Electronic Retrofit	0
I-CON Stainless Lav and Electronic Retrofit	0
I-CON Stainless Urinal and Electronic Retrofit	0
I-CON Electronic Mop Sink Retrofit	0
I-CON Electronic Specialty Valve	0
I-CON Envisage Computer Station	0
Stainless Toilet and Commercial Valve	0
Porcelain Toilet and Commercial Valve	0
Commercial Toilet Valve/Diaphragm/Prolast Kit	0
Porcelain Tank Toilet	0
Shower Nozzle	0
Stainless Lav and Commercial Valve	0
Commercial Lav Valve	0
Commercial Lav Aerator	0
Commercial Kitchen Stem/Valve/Body	0
Commercial Kitchen Aerator	0
Stainless Urinal and Commercial Valve	0
Porcelain Urinal and Commercial Valve	0
Commercial Urinal Valve/Diaphragm/Prolast Kit	0
Ice Machine Head Replacement	0
Ozone Laundry System	0
Mixing Valve	0
**Placeholder1	0
**Placeholder2	0

Inmate (Cell) Valve/Nozzle Totals:

I-CON Electronic Toilet Retrofit	610
I-CON Electronic Shower Retrofit	0
I-CON Electronic Lav Retrofit	0
I-CON Electronic Urinal Retrofit	0
I-CON Envisage Computer Station	0

Inmate Dorm Valve/Nozzle Totals:

I-CON Electronic Toilet Retrofit	0
I-CON Electronic Shower Retrofit	0
I-CON Electronic Lav Retrofit	0
I-CON Electronic Mop Sink Retrofit	0
I-CON Electronic Specialty Valve	0
I-CON Envisage Computer Station	0
Toilet (Fixture, Tank, Valve, Diaphragm, or Prolast Kit)	0
Faucet/Kitchen (Valve, Stem, or Aerator)	0
Urinal (I-CON, Fixture, Valve, Diaphragm, or Prolast Kit)	0
Shower (Head or Nozzle)	0
Ice Machine Head Replacement	0
Mixing Valve	0
**Placeholder1	0

Staff Valve/Nozzle Totals:

Toilet (Fixture, Valve, Diaphragm, or Prolast Kit)	0
Shower (Head or Nozzle)	0
Faucet (Valve, Stem, or Aerator)	0
Kitchen (Valve, Stem, or Aerator)	0
Urinal (Fixture, Valve, Diaphragm, or Prolast Kit)	0
Porcelain Tank Toilet	0
Ice Machine Head Replacement	0
Ozone Laundry System	0
**Placeholder2	0

Proprietary and Confidential
Intelligent Conservation Systems, Inc.

WATER CONSERVATION ANALYSIS - Inmate
ESCO RFP/SCI Mercer, PA

August 7, 2023

Facility:	**SCI Mercer, PA / Inmate**
#inmate	970
Annual Occupancy	100%
# of Days / Year	365
Occupied Days/Year	365
Water Cost /1000 Gallons	$9.15
Fuel / 1M Units	$5.00
Water Temp in Water Heater	50
Water Temp out of Water Heater	140
Mixed Water from Temp.Valve	105
Shower Retrofit Hot Water Percentage	100%

# Of Devices To Be Installed	
I-CON Electronic Toilet Retrofit	610
I-CON Electronic Shower Retrofit	0
I-CON Electronic Lav Retrofit	0
Kitch Aerators	0
I-CON Electronic Urinal Retrofit	0
Flushometer W.C. Open Area	0
I-CON Envisage Computer Station	0

Inmate Usage Per Day	
Flush Valve Flushes Per Fixture Before (Cells)	30
Flush Valve Flushes Per Fixture After (Cells)	16
Shower Minutes Per User Before	11
Shower Minutes Per User After	11
Lavatory Minutes Per User Before	4
Lavatory Minutes Per User After	4
Kitchen Aerator Minutes Per Fixture	0
Urinal Flushes Per Fixture	0
Flushometer W.C. Flushes Per Fixture	0

Device	Gallon Flow Before	Gallon Flow After	Per Day	Gallons Saved	Tenants Inmate	Occupied Days Per Year	# of Devices	Gallons Saved Per Year	Water Cost Per 1000 Gins
I-CON Electronic Toilet Retrofit	3.30	1.90	30	1.40	970	365	610	15,273,790	$9.15
I-CON Electronic Shower Retrofit	3.00	3.00	11	0.00	970	365	0	-	$9.15
I-CON Electronic Lav Retrofit	0.50	0.50	4	0.00	970	365	0	-	$9.15
Kitch Aerators	0.00	0.00	0	0.00	970	365	0	-	$9.15
I-CON Electronic Urinal Retrofit	0.00	0.00	0	0.00	970	365	0	-	$9.15
Flushometer W.C. Open Area	0.00	0.00	0	0.00	970	365	0	-	$9.15
I-CON Envisage Computer Station							0		
								15,273,790	

Proprietary and Confidential
Intelligent Conservation Systems, Inc.

August 7, 2023

Water Conservation Analysis - Inmate
ESCO RFP/SCI Mercer, PA

FACILITY INFORMATION:

Number of Inmates		970
Water rate/1,000 Gallons	$	9.15
Cold Water Temp into Heater		50
Hot Water Temp out of Heater		140
Mixed Water from Tempering Valve		105
Shower Retrofit Hot Water Percentage		100%
Fuel/1M BTU		$5.00

AVERAGE USAGE PER DAY:

Flush Valves Before	30	flushes/per unit
Flush Valves After	16	flushes/per unit
Showerheads Before	11	minutes/per user
Showerheads After	11	minutes/per user
Lavatory Sinks Before	4	minutes/per user
Lavatory Sinks After	4	minutes/per user
Kitchen Sinks	0	minutes/per unit
Urinals	0	flushes/per unit
Flush Valves	0	flushes/per unit

GALLONS USED PER DEVICE:

DEVICES	BEFORE RETROFIT	AFTER RETROFIT
Flush Valves Per Flush	3.30	1.90
Showerheads Per Minute	3.00	3.00
Lavatory Aerators Per Minute	0.50	0.50
Kitchen Aerators Per Minute	0.00	0.00
Urinals Per Flush	0.00	0.00
Flush Valves Per Flush	0.00	0.00

NUMBER OF DEVICES TO BE INSTALLED:

I-CON Electronic Toilet Retrofit	610
I-CON Electronic Shower Retrofi	0
I-CON Electronic Lav Retrofit	0
Kitch Aerators	0
I-CON Electronic Urinal Retrofit	0
Flushometer W.C. Open Area	0

TOTAL GALLONS USED PER DEVICE:

DEVICES	BEFORE RETROFIT		AFTER RETROFIT		SAVINGS
Flush Valves Per Flush	(30)X(3.3)X(610)X(365) =	22,042,350	(16)X(1.9)X(610)X(365) =	6,768,560	15,273,790
Showerheads Per Minute	(11)X(3)X(970)X(365) =	-	(11)X(3)X(970)X(365) =	-	-
Lavatory Aerators Per Minute	(4)X(0.5)X(970)X(365) =	-	(4)X(0.5)X(970)X(365) =	-	-
Kitchen Aerators Per Minute	(0)X(0)X(0)X(365) =	-	(0)X(0)X(0)X(365) =	-	-
Urinals Per Flush	(0)X(0)X(0)X(365) =	-	(0)X(0)X(0)X(365) =	-	-
Flush Valves Per Flush	(0)X(0)X(0)X(365) =	-	(0)X(0)X(0)X(365) =	-	-
TOTAL USAGE		22,042,350		6,768,560	15,273,790

TOTAL MMBTUS USED PER DEVICE:

	MMBTUS BEFORE RETROFIT		MMBTUS AFTER RETROFIT		SAVINGS
Fuel for Hot Water Showers	(105-50)X(3)X(1)X(11)X(970)X(8.34)X(365)/1M/.85 =	-	(105-50)X(3)X(1)X(11)X(970)X(8.34)X(365)/1M/.85 =	-	-
Fuel for Hot Water Lavatories	(105-50)X(0.5/2)X(4)X(970)X(8.34)X(365)/1M/.85 =	-	(105-50)X(0.5/2)X(4)X(970)X(8.34)X(365)/1M/.85 =	-	-
Fuel for Hot Water Kitchen	(105-50)X(0)X(0)X(0)X(8.34)X(365)/1M =	-	(105-50)X(0)X(0)X(0)X(8.34)X(365)/1M =	-	-
TOTAL SAVED		-		-	-

SUMMARY:

Total Gallons of Water Saved After Installation	
Total 1,000 Gallon Water Units	
Water Savings Per Year	15,274 X $9.15/1000 Gallons =
Fuel Savings Per Year	0 MMBTUS X $5.00/MMBTUS =
TOTAL SAVINGS PER YEAR	

Proprietary and Confidential
Intelligent Conservation Systems, Inc.

Summary Sheet - Utility Savings Analysis

ECM #7 - Inmate Plumbing Fixture Controls - Base w/Add3 SOW

Date	Company	Facility Name and Location
August 7, 2023	ESCO RFP	SCI Mercer, PA

Inmate Population:

Total	1097
Cell Population	970
Dorm Population	127

Staff Population:

Total	350
Security Staff	275
Admin Staff	75

Ground Water Temp (°F)	50
Affected Water Rate ($/kGal)	$9.1500
Affected Sewer Rate ($/kGal)	$0.0000
Affected Combined Rate ($/kGal)	$9.1500
Fuel Rate per 1 MMBTU (10 therms)	$5.0000
Total Water Consumption (Gal/Yr)	52,930,981

Affected Fixture Water Consumption (%)	45.5%
Affected Fixture Water Consumption (Gal/Yr)	24,067,671
Affected Fixture Water Savings (%)	31.0%
Affected Fixture Water Savings (Gal/Yr)	16,415,583

Leaking Valve Water Savings (%)	0.00%
Leaking Valve Water Savings (Gal/Yr)	-
Leaking Valve Cost Savings ($)	$ -

Total Water Savings (Gal/Yr)	16,415,583
Total Water Savings ($/Yr)	$ 150,203
Total Fuel Savings (Therm/Yr)	3,081
Total Fuel Savings ($/Yr)	$ 1,540
Total Savings	$ 151,743

Facility Totals:

I-CON Electronic Combi Retrofit (T+L)	610
I-CON Electronic Toilet Retrofit	0
I-CON Electronic Shower Retrofit	0
I-CON Electronic Lav Retrofit	32
I-CON Electronic Urinal Retrofit	0
I-CON Stainless Combi and Electronic Retrofit	0
I-CON Stainless Toilet and Electronic Retrofit	0
I-CON Stainless Shower and Electronic Retrofit	0
I-CON Stainless Lav and Electronic Retrofit	0
I-CON Stainless Urinal and Electronic Retrofit	0
I-CON Electronic Mop Sink Retrofit	0
I-CON Electronic Specialty Valve	0
I-CON Envisage Computer Station	0
Stainless Toilet and Commercial Valve	0
Porcelain Toilet and Commercial Valve	0
Commercial Toilet Valve/Diaphragm/Prolast Kit	0
Porcelain Tank Toilet	0
Shower Nozzle	0
Stainless Lav and Commercial Valve	0
Commercial Lav Valve	0
Commercial Lav Aerator	0
Commercial Kitchen Stem/Valve/Body	0
Commercial Kitchen Aerator	0
Stainless Urinal and Commercial Valve	0
Porcelain Urinal and Commercial Valve	0
Commercial Urinal Valve/Diaphragm/Prolast Kit	0
Ice Machine Head Replacement	0
Ozone Laundry System	0
Mixing Valve	0
**Placeholder1	0
**Placeholder2	0

Inmate (Cell) Valve/Nozzle Totals:

I-CON Electronic Toilet Retrofit	610
I-CON Electronic Shower Retrofit	0
I-CON Electronic Lav Retrofit	610
I-CON Electronic Urinal Retrofit	0
I-CON Envisage Computer Station	0

Inmate Dorm Valve/Nozzle Totals:

I-CON Electronic Toilet Retrofit	0
I-CON Electronic Shower Retrofit	0
I-CON Electronic Lav Retrofit	32
I-CON Electronic Mop Sink Retrofit	0
I-CON Electronic Specialty Valve	0
I-CON Envisage Computer Station	0
Toilet (Fixture, Tank, Valve, Diaphragm, or Prolast Kit)	0
Faucet/Kitchen (Valve, Stem, or Aerator)	0
Urinal (I-CON, Fixture, Valve, Diaphragm, or Prolast Kit)	0
Shower (Head or Nozzle)	0
Ice Machine Head Replacement	0
Mixing Valve	0
**Placeholder1	0

Staff Valve/Nozzle Totals:

Toilet (Fixture, Valve, Diaphragm, or Prolast Kit)	0
Shower (Head or Nozzle)	0
Faucet (Valve, Stem, or Aerator)	0
Kitchen (Valve, Stem, or Aerator)	0
Urinal (Fixture, Valve, Diaphragm, or Prolast Kit)	0
Porcelain Tank Toilet	0
Ice Machine Head Replacement	0
Ozone Laundry System	0
**Placeholder2	0

Proprietary and Confidential
Intelligent Conservation Systems, Inc.

WATER CONSERVATION ANALYSIS - Inmate
ESCO RFP/SCI Mercer, PA

August 7, 2023

Facility:	**SCI Mercer, PA / Inmate**
#inmate	970
Annual Occupancy	100%
# of Days / Year	365
Occupied Days/Year	365
Water Cost /1000 Gallons	$9.15
Fuel / 1M Units	$5.00
Water Temp in Water Heater	50
Water Temp out of Water Heater	140
Mixed Water from Temp.Valve	105
Shower Retrofit Hot Water Percentage	100%

# Of Devices To Be Installed	
I-CON Electronic Toilet Retrofit	610
I-CON Electronic Shower Retrofit	0
I-CON Electronic Lav Retrofit	610
Kitch Aerators	0
I-CON Electronic Urinal Retrofit	0
Flushometer W.C. Open Area	0
I-CON Envisage Computer Station	0

Inmate Usage Per Day	
Flush Valve Flushes Per Fixture Before (Cells)	30
Flush Valve Flushes Per Fixture After (Cells)	16
Shower Minutes Per User Before	11
Shower Minutes Per User After	11
Lavatory Minutes Per User Before	4
Lavatory Minutes Per User After	2.5
Kitchen Aerator Minutes Per Fixture	0
Urinal Flushes Per Fixture	0
Flushometer W.C. Flushes Per Fixture	0

Device	Gallon Flow Before	Gallon Flow After	Per Day	Gallons Saved	Tenants Inmate	Occupied Days Per Year	# of Devices	Gallons Saved Per Year	Water Cost Per 1000 Gins
I-CON Electronic Toilet Retrofit	3.30	1.90	30	1.40	970	365	610	15,273,790	$9.15
I-CON Electronic Shower Retrofit	3.00	3.00	11	0.00	970	365	0	-	$9.15
I-CON Electronic Lav Retrofit	1.30	0.90	4	0.40	970	365	610	1,044,448	$9.15
Kitch Aerators	0.00	0.00	0	0.00	970	365	0	-	$9.15
I-CON Electronic Urinal Retrofit	0.00	0.00	0	0.00	970	365	0	-	$9.15
Flushometer W.C. Open Area	0.00	0.00	0	0.00	970	365	0	-	$9.15
I-CON Envisage Computer Station							0		
								16,318,238	

Proprietary and Confidential
Intelligent Conservation Systems, Inc.

August 7, 2023

Water Conservation Analysis - Inmate
ESCO RFP/SCI Mercer, PA

FACILITY INFORMATION:

Number of Inmates		970
Water rate/1,000 Gallons	$	9.15
Cold Water Temp into Heater		50
Hot Water Temp out of Heater		140
Mixed Water from Tempering Valve		105
Shower Retrofit Hot Water Percentage		100%
Fuel/1M BTU		$5.00

AVERAGE USAGE PER DAY:

Flush Valves Before	30	flushes/per unit
Flush Valves After	16	flushes/per unit
Showerheads Before	11	minutes/per user
Showerheads After	11	minutes/per user
Lavatory Sinks Before	4	minutes/per user
Lavatory Sinks After	2.5	minutes/per user
Kitchen Sinks	0	minutes/per unit
Urinals	0	flushes/per unit
Flush Valves	0	flushes/per unit

GALLONS USED PER DEVICE:

DEVICES	BEFORE RETROFIT	AFTER RETROFIT
Flush Valves Per Flush	3.30	1.90
Showerheads Per Minute	3.00	3.00
Lavatory Aerators Per Minute	1.30	0.90
Kitchen Aerators Per Minute	0.00	0.00
Urinals Per Flush	0.00	0.00
Flush Valves Per Flush	0.00	0.00

NUMBER OF DEVICES TO BE INSTALLED:

I-CON Electronic Toilet Retrofit	610
I-CON Electronic Shower Retrofi	0
I-CON Electronic Lav Retrofit	610
Kitch Aerators	0
I-CON Electronic Urinal Retrofit	0
Flushometer W.C. Open Area	0

TOTAL GALLONS USED PER DEVICE:

DEVICES	BEFORE RETROFIT		AFTER RETROFIT		SAVINGS
Flush Valves Per Flush	(30)X(3.3)X(610)X(365) =	22,042,350	(16)X(1.9)X(610)X(365) =	6,768,560	15,273,790
Showerheads Per Minute	(11)X(3)X(970)X(365) =	-	(11)X(3)X(970)X(365) =	-	-
Lavatory Aerators Per Minute	(4)X(1.3)X(970)X(365) =	1,841,060	(2.5)X(0.9)X(970)X(365) =	796,613	1,044,448
Kitchen Aerators Per Minute	(0)X(0)X(0)X(365) =	-	(0)X(0)X(0)X(365) =	-	-
Urinals Per Flush	(0)X(0)X(0)X(365) =	-	(0)X(0)X(0)X(365) =	-	-
Flush Valves Per Flush	(0)X(0)X(0)X(365) =	-	(0)X(0)X(0)X(365) =	-	-
TOTAL USAGE		23,883,410		7,565,173	16,318,238

TOTAL MMBTUS USED PER DEVICE:

	MMBTUS BEFORE RETROFIT		MMBTUS AFTER RETROFIT		SAVINGS
Fuel for Hot Water Showers	(105-50)X(3)X(1)X(11)X(970)X(8.34)X(365)/1M/.85 =	-	(105-50)X(3)X(1)X(11)X(970)X(8.34)X(365)/1M/.85 =	-	-
Fuel for Hot Water Lavatories	(105-50)X(1.3/2)X(4)X(970)X(8.34)X(365)/1M/.85 =	497	(105-50)X(0.9/2)X(2.5)X(970)X(8.34)X(365)/1M/.85 =	215	282
Fuel for Hot Water Kitchen	(105-50)X(0)X(0)X(0)X(8.34)X(365)/1M =	-	(105-50)X(0)X(0)X(0)X(8.34)X(365)/1M =	-	-
TOTAL SAVED		497		215	282

SUMMARY:

Total Gallons of Water Saved After Installation	
Total 1,000 Gallon Water Units	
Water Savings Per Year	16,318 X $9.15/1000 Gallons =
Fuel Savings Per Year	282 MMBTUS X $5.00/MMBTUS =
TOTAL SAVINGS PER YEAR	

Proprietary and Confidential
Intelligent Conservation Systems, Inc.

Water Conservation Analysis - Inmate Dorm
ESCO RFP/SCI Mercer, PA

August 7, 2023

Facility:	**SCI Mercer, PA / Inmate Dorm**
# of Dorms	0
#inmate	127
Annual Occupancy	100%
# of Days / Year	365
Occupied Days/Year	365
Water Cost /1000 Gallons	$9.15
Fuel / 1M Units	$5.00
Water Temp in Water Heater	50
Water Temp out of Water Heater	140
Mixed Water from Temp.Valve	105
Shower Retrofit Hot Water Percentage	100%
LF Showerhead Hot Water Percentage	100%

# Of Devices To Be Installed	
I-CON Electronic Toilet Retrofit	0
I-CON Electronic Shower Retrofit	0
I-CON Electronic Lav Retrofit	32
I-CON Electronic Mop Sink Retrofit	0
I-CON Electronic Specialty Valve	0
Toilet (Fixture, Tank, Valve, Diaphragm, or Prolast Kit)	0
Faucet/Kitchen (Valve, Stem, or Aerator)	0
Urinal (I-CON, Fixture, Valve, Diaphragm, or Prolast K	0
Shower (Head or Nozzle)	0
I-CON Envisage Computer Station	0

Inmate Usage Per Day	
Flush Valve Flushes Per Fixture Before	0
Flush Valve Flushes Per Fixture After	0
Shower Minutes Per User Before	0
Shower Minutes Per User After	0
Lavatory Minutes Per User Before	5.3
Lavatory Minutes Per User After	2.5
Mop Sink Minutes Per Fixture Before	0
Mop Sink Minutes Per Fixture After	0
I-CON Electronic Specialty Valve Minutes Per Fixture Before	0
I-CON Electronic Specialty Valve Minutes Per Fixture After	0
LF Toilet Flushes Per Fixture	20
LF Aerator Minutes Per Fixture	6
LF Urinal Flushes Per Fixture	0
LF Showerhead Minutes Per User	11

Device	Gallon Flow Before	Gallon Flow After	Usage Per Day (Pre)	Gallons Saved	Tenants Inmate	Occupied Days Per Year	# of Devices	Gallons Saved Per Year	Water Cost Per 1000 Glns
I-CON Electronic Toilet Retrofit	0.00	0.00	0	0.00	127	365	0	-	$9.15
I-CON Electronic Shower Retrofit	0.00	0.00	0	0.00	127	365	0	-	$9.15
I-CON Electronic Lav Retrofit	0.75	0.75	5.3	0.00	127	365	32	97,346	$9.15
I-CON Electronic Mop Sink Retrofit	0.00	0.00	0	0.00	127	365	0	-	$9.15
I-CON Electronic Specialty Valve	0.00	0.00	0	0.00	127	365	0	-	$9.15
Toilet (Fixture, Tank, Valve, Diaphragm, or Pro	3.50	3.50	20	0.00	127	365	0	-	$9.15
Faucet/Kitchen (Valve, Stem, or Aerator)	2.20	2.20	6	0.00	127	365	0	-	$9.15
Urinal (I-CON, Fixture, Valve, Diaphragm, or Pr	0.00	0.00	0	0.00	127	365	0	-	$9.15
Shower (Head or Nozzle)	2.50	2.50	11	0.00	127	365	0	-	$9.15
I-CON Envisage Computer Station							0		
								97,346	

Proprietary and Confidential
Intelligent Conservation Systems, Inc.

Water Conservation Analysis - Inmate Dorm
ESCO RFP/SCI Mercer, PA

August 7, 2023

FACILITY INFORMATION:

Number of Dorms	0
Number of Inmates	127
Water rate/1,000 Gallons	$9.15
Cold Water Temp into Heater	50
Hot Water Temp out of Heater	140
Mixed Water from Tempering Valve	105
Shower Retrofit Hot Water Percentage	100%
LF Showerhead Hot Water Percentage	100%
Fuel/1M BTU	$5.00

AVERAGE USAGE PER DAY:

Flush Valve Flushes Per Fixture Before	0	flushes/per fixture
Flush Valve Flushes Per Fixture After	0	flushes/per fixture
Shower Minutes Per User Before	0	minutes/per user
Shower Minutes Per User After	0	minutes/per user
Lavatory Minutes Per User Before	5.3	minutes/per user
Lavatory Minutes Per User After	2.5	minutes/per user
Mop Sink Minutes Per Fixture Before	0	minutes/per fixture
Mop Sink Minutes Per Fixture After	0	minutes/per fixture
I-CON Electronic Specialty Valve Minutes Per Fixture Before	0	minutes/per fixture
I-CON Electronic Specialty Valve Minutes Per Fixture After	0	minutes/per fixture
LF Toilet Flushes Per Fixture	20	flushes/per fixture
LF Aerator Minutes Per Fixture	6	minutes/per fixture
LF Urinal Flushes Per Fixture	0	flushes/per fixture
LF Showerhead Minutes Per User	11	minutes/per user

GALLONS USED PER DEVICE:

DEVICES	BEFORE RETROFIT	AFTER RETROFIT
Flush Valves Per Flush	0.00	0.00
Shower Per Minute	0.00	0.00
Lavatory Aerators Per Minute	0.75	0.75
Mop Sinks Per Minute	0.00	0.00
Garden Hoses Per Minute	0.00	0.00
LF Flush Valves Per Flush	3.50	3.50
LF Faucet Aerators Per Minute	2.20	2.20
LF Urinals Per Flush	0.00	0.00
LF Showerheads Per Minute	2.50	2.50

NUMBER OF DEVICES TO BE INSTALLED:

I-CON Electronic Toilet Retrofit	0
I-CON Electronic Shower Retrofit	0
I-CON Electronic Lav Retrofit	32
I-CON Electronic Mop Sink Retrofit	0
I-CON Electronic Specialty Valve	0
Toilet (Fixture, Tank, Valve, Diaphra	0
Faucet/Kitchen (Valve, Stem, or Aer	0
Urinal (I-CON, Fixture, Valve, Diaphr	0
Shower (Head or Nozzle)	0
I-CON Envisage Computer Station	0

TOTAL GALLONS USED PER DEVICE:

DEVICES	BEFORE RETROFIT		AFTER RETROFIT		SAVINGS
I-CON Electronic Toilet Retrofit	(0)X(0)X(0)X(365) =	-	(0)X(0)X(0)X(365) =	-	-
I-CON Electronic Shower Retrofit	(0)X(0)X(127)X(365) =	-	(0)X(0)X(127)X(365) =	-	-
I-CON Electronic Lav Retrofit	(5.3)X(0.75)X(127)X(365) =	184,261	(2.5)X(0.75)X(127)X(365) =	86,916	97,346
I-CON Electronic Mop Sink Retrofit	(0)X(0)X(0)X(365) =	-	(0)X(0)X(0)X(365) =	-	-
I-CON Electronic Specialty Valve	(0)X(0)X(0)X(365) =	-	(0)X(0)X(0)X(365) =	-	-
Toilet (Fixture, Tank, Valve, Diaphragm, or Prolast Kit)	(20)X(3.5)X(0)X(365) =	-	(20)X(3.5)X(0)X(365) =	-	-
Faucet/Kitchen (Valve, Stem, or Aerator)	(6)X(2.2)X(0)X(365) =	-	(6)X(2.2)X(0)X(365) =	-	-
Urinal (I-CON, Fixture, Valve, Diaphragm, or Prolast Kit)	(0)X(0)X(0)X(365) =	-	(0)X(0)X(0)X(365) =	-	-
Shower (Head or Nozzle)	(11)X(2.5)X(127)X(365) =	-	(11)X(2.5)X(127)X(365) =	-	-
TOTAL USAGE		184,261		86,916	97,346

TOTAL MMBTUS USED PER DEVICE:

	MMBTUS BEFORE RETROFIT		MMBTUS AFTER RETROFIT		SAVINGS
Fuel for Hot Water I-CON Electronic Shower Retrofit	(105-50)X(0)X(1)X(0)X(127)X(8.34)X(365)/1M/.85 =	-	(105-50)X(0)X(1)X(0)X(127)X(8.34)X(365)/1M/.85 =	-	-
Fuel for Hot Water I-CON Electronic Lav Retrofit	(105-50)X(0.75/2)X(5.3)X(127)X(8.34)X(365)/1M/.85 =	50	(105-50)X(0.75/2)X(2.5)X(127)X(8.34)X(365)/1M/.85 =	23	26
Fuel for Hot Water I-CON Electronic Mop Sink Retrofit	(105-50)X(0/2)X(0)X(0)X(8.34)X(365)/1M/.85 =	-	(105-50)X(0/2)X(0)X(0)X(8.34)X(365)/1M/.85 =	-	-
Fuel for Hot Water Faucet/Kitchen (Valve, Stem, or Aerator)	(105-50)X(2.2/2)X(6)X(0)X(8.34)X(365)/1M/.85 =	-	(105-50)X(2.2/2)X(6)X(0)X(8.34)X(365)/1M/.85 =	-	-
Fuel for Hot Water Shower (Head or Nozzle)	(105-50)X(2.5)X(1)X(11)X(127)X(8.34)X(365)/1M/.85 =	-	(105-50)X(2.5)X(1)X(11)X(127)X(8.34)X(365)/1M/.85 =	-	-
TOTAL SAVED		50		23	26

Proprietary and Confidential
Intelligent Conservation Systems, Inc.

Summary Sheet - Utility Savings Analysis

ECM #7 - Inmate Plumbing Fixture Controls - Base w/Add4 SOW

Date	Company	Facility Name and Location
August 7, 2023	ESCO RFP	SCI Mercer, PA

Inmate Population:

Total	1097
Cell Population	970
Dorm Population	127

Staff Population:

Total	350
Security Staff	275
Admin Staff	75

Ground Water Temp (°F)	50
Affected Water Rate ($/kGal)	$9.1500
Affected Sewer Rate ($/kGal)	$0.0000
Affected Combined Rate ($/kGal)	$9.1500
Fuel Rate per 1 MMBTU (10 therms)	$5.0000
Total Water Consumption (Gal/Yr)	52,930,981

Affected Fixture Water Consumption (%)	54.1%
Affected Fixture Water Consumption (Gal/Yr)	28,649,033
Affected Fixture Water Savings (%)	32.3%
Affected Fixture Water Savings (Gal/Yr)	17,075,613

Leaking Valve Water Savings (%)	0.00%
Leaking Valve Water Savings (Gal/Yr)	-
Leaking Valve Cost Savings ($)	$ -

Total Water Savings (Gal/Yr)	17,075,613
Total Water Savings ($/Yr)	$ 156,242
Total Fuel Savings (Therm/Yr)	9,723
Total Fuel Savings ($/Yr)	$ 4,862
Total Savings	$ 161,104

Facility Totals:

I-CON Electronic Combi Retrofit (T+L)	0
I-CON Electronic Toilet Retrofit	610
I-CON Electronic Shower Retrofit	122
I-CON Electronic Lav Retrofit	0
I-CON Electronic Urinal Retrofit	0
I-CON Stainless Combi and Electronic Retrofit	0
I-CON Stainless Toilet and Electronic Retrofit	0
I-CON Stainless Shower and Electronic Retrofit	0
I-CON Stainless Lav and Electronic Retrofit	0
I-CON Stainless Urinal and Electronic Retrofit	0
I-CON Electronic Mop Sink Retrofit	0
I-CON Electronic Specialty Valve	0
I-CON Envisage Computer Station	0
Stainless Toilet and Commercial Valve	0
Porcelain Toilet and Commercial Valve	0
Commercial Toilet Valve/Diaphragm/Prolast Kit	0
Porcelain Tank Toilet	0
Shower Nozzle	0
Stainless Lav and Commercial Valve	0
Commercial Lav Valve	0
Commercial Lav Aerator	0
Commercial Kitchen Stem/Valve/Body	0
Commercial Kitchen Aerator	0
Stainless Urinal and Commercial Valve	0
Porcelain Urinal and Commercial Valve	0
Commercial Urinal Valve/Diaphragm/Prolast Kit	0
Ice Machine Head Replacement	0
Ozone Laundry System	0
Mixing Valve	0
**Placeholder1	0
**Placeholder2	0

Inmate (Cell) Valve/Nozzle Totals:

I-CON Electronic Toilet Retrofit	610
I-CON Electronic Shower Retrofit	106
I-CON Electronic Lav Retrofit	0
I-CON Electronic Urinal Retrofit	0
I-CON Envisage Computer Station	0

Inmate Dorm Valve/Nozzle Totals:

I-CON Electronic Toilet Retrofit	0
I-CON Electronic Shower Retrofit	16
I-CON Electronic Lav Retrofit	0
I-CON Electronic Mop Sink Retrofit	0
I-CON Electronic Specialty Valve	0
I-CON Envisage Computer Station	0
Toilet (Fixture, Tank, Valve, Diaphragm, or Prolast Kit)	0
Faucet/Kitchen (Valve, Stem, or Aerator)	0
Urinal (I-CON, Fixture, Valve, Diaphragm, or Prolast Kit)	0
Shower (Head or Nozzle)	0
Ice Machine Head Replacement	0
Mixing Valve	0
**Placeholder1	0

Staff Valve/Nozzle Totals:

Toilet (Fixture, Valve, Diaphragm, or Prolast Kit)	0
Shower (Head or Nozzle)	0
Faucet (Valve, Stem, or Aerator)	0
Kitchen (Valve, Stem, or Aerator)	0
Urinal (Fixture, Valve, Diaphragm, or Prolast Kit)	0
Porcelain Tank Toilet	0
Ice Machine Head Replacement	0
Ozone Laundry System	0
**Placeholder2	0

Proprietary and Confidential
Intelligent Conservation Systems, Inc.

WATER CONSERVATION ANALYSIS - Inmate
ESCO RFP/SCI Mercer, PA

August 7, 2023

Facility:	**SCI Mercer, PA / Inmate**
#inmate	970
Annual Occupancy	100%
# of Days / Year	365
Occupied Days/Year	365
Water Cost /1000 Gallons	$9.15
Fuel / 1M Units	$5.00
Water Temp in Water Heater	50
Water Temp out of Water Heater	140
Mixed Water from Temp.Valve	105
Shower Retrofit Hot Water Percentage	100%

# Of Devices To Be Installed	
I-CON Electronic Toilet Retrofit	610
I-CON Electronic Shower Retrofit	106
I-CON Electronic Lav Retrofit	0
Kitch Aerators	0
I-CON Electronic Urinal Retrofit	0
Flushometer W.C. Open Area	0
I-CON Envisage Computer Station	0

Inmate Usage Per Day	
Flush Valve Flushes Per Fixture Before (Cells)	30
Flush Valve Flushes Per Fixture After (Cells)	16
Shower Minutes Per User Before	11
Shower Minutes Per User After	8
Lavatory Minutes Per User Before	4
Lavatory Minutes Per User After	4
Kitchen Aerator Minutes Per Fixture	0
Urinal Flushes Per Fixture	0
Flushometer W.C. Flushes Per Fixture	0

Device	Gallon Flow Before	Gallon Flow After	Per Day	Gallons Saved	Tenants Inmate	Occupied Days Per Year	# of Devices	Gallons Saved Per Year	Water Cost Per 1000 Glns
I-CON Electronic Toilet Retrofit	3.30	1.90	30	1.40	970	365	610	15,273,790	$9.15
I-CON Electronic Shower Retrofit	1.50	1.50	11	0.00	970	365	106	1,593,225	$9.15
I-CON Electronic Lav Retrofit	0.50	0.50	4	0.00	970	365	0	-	$9.15
Kitch Aerators	0.00	0.00	0	0.00	970	365	0	-	$9.15
I-CON Electronic Urinal Retrofit	0.00	0.00	0	0.00	970	365	0	-	$9.15
Flushometer W.C. Open Area	0.00	0.00	0	0.00	970	365	0	-	$9.15
I-CON Envisage Computer Station							0		
								16,867,015	

Proprietary and Confidential
Intelligent Conservation Systems, Inc.

August 7, 2023

Water Conservation Analysis - Inmate
ESCO RFP/SCI Mercer, PA

FACILITY INFORMATION:

Number of Inmates		970
Water rate/1,000 Gallons	$	9.15
Cold Water Temp into Heater		50
Hot Water Temp out of Heater		140
Mixed Water from Tempering Valve		105
Shower Retrofit Hot Water Percentage		100%
Fuel/1M BTU		$5.00

AVERAGE USAGE PER DAY:

Flush Valves Before	30	flushes/per unit
Flush Valves After	16	flushes/per unit
Showerheads Before	11	minutes/per user
Showerheads After	8	minutes/per user
Lavatory Sinks Before	4	minutes/per user
Lavatory Sinks After	4	minutes/per user
Kitchen Sinks	0	minutes/per unit
Urinals	0	flushes/per unit
Flush Valves	0	flushes/per unit

GALLONS USED PER DEVICE:

DEVICES	BEFORE RETROFIT	AFTER RETROFIT
Flush Valves Per Flush	3.30	1.90
Showerheads Per Minute	1.50	1.50
Lavatory Aerators Per Minute	0.50	0.50
Kitchen Aerators Per Minute	0.00	0.00
Urinals Per Flush	0.00	0.00
Flush Valves Per Flush	0.00	0.00

NUMBER OF DEVICES TO BE INSTALLED:

I-CON Electronic Toilet Retrofit	610
I-CON Electronic Shower Retrofi	106
I-CON Electronic Lav Retrofit	0
Kitch Aerators	0
I-CON Electronic Urinal Retrofit	0
Flushometer W.C. Open Area	0

TOTAL GALLONS USED PER DEVICE:

DEVICES	BEFORE RETROFIT		AFTER RETROFIT		SAVINGS
Flush Valves Per Flush	(30)X(3.3)X(610)X(365) =	22,042,350	(16)X(1.9)X(610)X(365) =	6,768,560	15,273,790
Showerheads Per Minute	(11)X(1.5)X(970)X(365) =	5,841,825	(8)X(1.5)X(970)X(365) =	4,248,600	1,593,225
Lavatory Aerators Per Minute	(4)X(0.5)X(970)X(365) =	-	(4)X(0.5)X(970)X(365) =	-	-
Kitchen Aerators Per Minute	(0)X(0)X(0)X(365) =	-	(0)X(0)X(0)X(365) =	-	-
Urinals Per Flush	(0)X(0)X(0)X(365) =	-	(0)X(0)X(0)X(365) =	-	-
Flush Valves Per Flush	(0)X(0)X(0)X(365) =	-	(0)X(0)X(0)X(365) =	-	-
TOTAL USAGE		27,884,175		11,017,160	16,867,015

TOTAL MMBTUS USED PER DEVICE:

	MMBTUS BEFORE RETROFIT		MMBTUS AFTER RETROFIT		SAVINGS
Fuel for Hot Water Showers	(105-50)X(1.5)X(1)X(11)X(970)X(8.34)X(365)/1M/.85 =	3,153	(105-50)X(1.5)X(1)X(8)X(970)X(8.34)X(365)/1M/.85 =	2,293	860
Fuel for Hot Water Lavatories	(105-50)X(0.5/2)X(4)X(970)X(8.34)X(365)/1M/.85 =	-	(105-50)X(0.5/2)X(4)X(970)X(8.34)X(365)/1M/.85 =	-	-
Fuel for Hot Water Kitchen	(105-50)X(0)X(0)X(0)X(8.34)X(365)/1M =	-	(105-50)X(0)X(0)X(0)X(8.34)X(365)/1M =	-	-
TOTAL SAVED		3,153		2,293	860

SUMMARY:

Total Gallons of Water Saved After Installation	
Total 1,000 Gallon Water Units	
Water Savings Per Year	16,867 X $9.15/1000 Gallons =
Fuel Savings Per Year	860 MMBTUS X $5.00/MMBTUS =
TOTAL SAVINGS PER YEAR	

Proprietary and Confidential
Intelligent Conservation Systems, Inc.

Water Conservation Analysis - Inmate Dorm
ESCO RFP/SCI Mercer, PA

August 7, 2023

Facility:	**SCI Mercer, PA / Inmate Dorm**
# of Dorms	0
#inmate	127
Annual Occupancy	100%
# of Days / Year	365
Occupied Days/Year	365
Water Cost /1000 Gallons	$9.15
Fuel / 1M Units	$5.00
Water Temp in Water Heater	50
Water Temp out of Water Heater	140
Mixed Water from Temp.Valve	105
Shower Retrofit Hot Water Percentage	100%
LF Showerhead Hot Water Percentage	100%

# Of Devices To Be Installed	
I-CON Electronic Toilet Retrofit	0
I-CON Electronic Shower Retrofit	16
I-CON Electronic Lav Retrofit	0
I-CON Electronic Mop Sink Retrofit	0
I-CON Electronic Specialty Valve	0
Toilet (Fixture, Tank, Valve, Diaphragm, or Prolast Kit)	0
Faucet/Kitchen (Valve, Stem, or Aerator)	0
Urinal (I-CON, Fixture, Valve, Diaphragm, or Prolast K	0
Shower (Head or Nozzle)	0
I-CON Envisage Computer Station	0

Inmate Usage Per Day	
Flush Valve Flushes Per Fixture Before	0
Flush Valve Flushes Per Fixture After	0
Shower Minutes Per User Before	11
Shower Minutes Per User After	8
Lavatory Minutes Per User Before	0
Lavatory Minutes Per User After	0
Mop Sink Minutes Per Fixture Before	0
Mop Sink Minutes Per Fixture After	0
I-CON Electronic Specialty Valve Minutes Per Fixture Before	0
I-CON Electronic Specialty Valve Minutes Per Fixture After	0
LF Toilet Flushes Per Fixture	20
LF Aerator Minutes Per Fixture	6
LF Urinal Flushes Per Fixture	0
LF Showerhead Minutes Per User	11

Device	**Gallon Flow Before**	**Gallon Flow After**	**Usage Per Day (Pre)**	**Gallons Saved**	**Tenants Inmate**	**Occupied Days Per Year**	**# of Devices**	**Gallons Saved Per Year**	**Water Cost Per 1000 Glns**
I-CON Electronic Toilet Retrofit	0.00	0.00	0	0.00	127	365	0	-	$9.15
I-CON Electronic Shower Retrofit	1.50	1.50	11	0.00	127	365	16	208,598	$9.15
I-CON Electronic Lav Retrofit	0.00	0.00	0	0.00	127	365	0	-	$9.15
I-CON Electronic Mop Sink Retrofit	0.00	0.00	0	0.00	127	365	0	-	$9.15
I-CON Electronic Specialty Valve	0.00	0.00	0	0.00	127	365	0	-	$9.15
Toilet (Fixture, Tank, Valve, Diaphragm, or Pro	3.50	3.50	20	0.00	127	365	0	-	$9.15
Faucet/Kitchen (Valve, Stem, or Aerator)	2.20	2.20	6	0.00	127	365	0	-	$9.15
Urinal (I-CON, Fixture, Valve, Diaphragm, or Pr	0.00	0.00	0	0.00	127	365	0	-	$9.15
Shower (Head or Nozzle)	2.50	2.50	11	0.00	127	365	0	-	$9.15
I-CON Envisage Computer Station							0		
								208,598	

Proprietary and Confidential
Intelligent Conservation Systems, Inc.

Water Conservation Analysis - Inmate Dorm
ESCO RFP/SCI Mercer, PA

August 7, 2023

FACILITY INFORMATION:

Number of Dorms	0
Number of Inmates	127
Water rate/1,000 Gallons	$9.15
Cold Water Temp into Heater	50
Hot Water Temp out of Heater	140
Mixed Water from Tempering Valve	105
Shower Retrofit Hot Water Percentage	100%
LF Showerhead Hot Water Percentage	100%
Fuel/1M BTU	$5.00

AVERAGE USAGE PER DAY:

Flush Valve Flushes Per Fixture Before	0	flushes/per fixture
Flush Valve Flushes Per Fixture After	0	flushes/per fixture
Shower Minutes Per User Before	11	minutes/per user
Shower Minutes Per User After	8	minutes/per user
Lavatory Minutes Per User Before	0	minutes/per user
Lavatory Minutes Per User After	0	minutes/per user
Mop Sink Minutes Per Fixture Before	0	minutes/per fixture
Mop Sink Minutes Per Fixture After	0	minutes/per fixture
I-CON Electronic Specialty Valve Minutes Per Fixture Before	0	minutes/per fixture
I-CON Electronic Specialty Valve Minutes Per Fixture After	0	minutes/per fixture
LF Toilet Flushes Per Fixture	20	flushes/per fixture
LF Aerator Minutes Per Fixture	6	minutes/per fixture
LF Urinal Flushes Per Fixture	0	flushes/per fixture
LF Showerhead Minutes Per User	11	minutes/per user

GALLONS USED PER DEVICE:

DEVICES	BEFORE RETROFIT	AFTER RETROFIT
Flush Valves Per Flush	0.00	0.00
Shower Per Minute	1.50	1.50
Lavatory Aerators Per Minute	0.00	0.00
Mop Sinks Per Minute	0.00	0.00
Garden Hoses Per Minute	0.00	0.00
LF Flush Valves Per Flush	3.50	3.50
LF Faucet Aerators Per Minute	2.20	2.20
LF Urinals Per Flush	0.00	0.00
LF Showerheads Per Minute	2.50	2.50

NUMBER OF DEVICES TO BE INSTALLED:

I-CON Electronic Toilet Retrofit	0
I-CON Electronic Shower Retrofit	16
I-CON Electronic Lav Retrofit	0
I-CON Electronic Mop Sink Retrofit	0
I-CON Electronic Specialty Valve	0
Toilet (Fixture, Tank, Valve, Diaphra	0
Faucet/Kitchen (Valve, Stem, or Aer	0
Urinal (I-CON, Fixture, Valve, Diaphı	0
Shower (Head or Nozzle)	0
I-CON Envisage Computer Station	0

TOTAL GALLONS USED PER DEVICE:

DEVICES	BEFORE RETROFIT		AFTER RETROFIT		SAVINGS
I-CON Electronic Toilet Retrofit	(0)X(0)X(0)X(365) =	-	(0)X(0)X(0)X(365) =	-	-
I-CON Electronic Shower Retrofit	(11)X(1.5)X(127)X(365) =	764,858	(8)X(1.5)X(127)X(365) =	556,260	208,598
I-CON Electronic Lav Retrofit	(0)X(0)X(127)X(365) =	-	(0)X(0)X(127)X(365) =	-	-
I-CON Electronic Mop Sink Retrofit	(0)X(0)X(0)X(365) =	-	(0)X(0)X(0)X(365) =	-	-
I-CON Electronic Specialty Valve	(0)X(0)X(0)X(365) =	-	(0)X(0)X(0)X(365) =	-	-
Toilet (Fixture, Tank, Valve, Diaphragm, or Prolast Kit)	(20)X(3.5)X(0)X(365) =	-	(20)X(3.5)X(0)X(365) =	-	-
Faucet/Kitchen (Valve, Stem, or Aerator)	(6)X(2.2)X(0)X(365) =	-	(6)X(2.2)X(0)X(365) =	-	-
Urinal (I-CON, Fixture, Valve, Diaphragm, or Prolast Kit)	(0)X(0)X(0)X(365) =	-	(0)X(0)X(0)X(365) =	-	-
Shower (Head or Nozzle)	(11)X(2.5)X(127)X(365) =	-	(11)X(2.5)X(127)X(365) =	-	-
TOTAL USAGE		764,858		556,260	208,598

TOTAL MMBTUS USED PER DEVICE:

	MMBTUS BEFORE RETROFIT		MMBTUS AFTER RETROFIT		SAVINGS
Fuel for Hot Water I-CON Electronic Shower Retrofit	(105-50)X(1.5)X(1)X(11)X(127)X(8.34)X(365)/1M/.85 =	413	(105-50)X(1.5)X(1)X(8)X(127)X(8.34)X(365)/1M/.85 =	300	113
Fuel for Hot Water I-CON Electronic Lav Retrofit	(105-50)X(0/2)X(0)X(127)X(8.34)X(365)/1M/.85 =	-	(105-50)X(0/2)X(0)X(127)X(8.34)X(365)/1M/.85 =	-	-
Fuel for Hot Water I-CON Electronic Mop Sink Retrofit	(105-50)X(0/2)X(0)X(0)X(8.34)X(365)/1M/.85 =	-	(105-50)X(0/2)X(0)X(0)X(8.34)X(365)/1M/.85 =	-	-
Fuel for Hot Water Faucet/Kitchen (Valve, Stem, or Aerator)	(105-50)X(2.2/2)X(6)X(0)X(8.34)X(365)/1M/.85 =	-	(105-50)X(2.2/2)X(6)X(0)X(8.34)X(365)/1M/.85 =	-	-
Fuel for Hot Water Shower (Head or Nozzle)	(105-50)X(2.5)X(1)X(11)X(127)X(8.34)X(365)/1M/.85 =	-	(105-50)X(2.5)X(1)X(11)X(127)X(8.34)X(365)/1M/.85 =	-	-
TOTAL SAVED		413		300	113

SUMMARY:

Total Gallons of Water Saved After Installation	
Total 1,000 Gallon Water Units	
Water Savings Per Year	209 X $9.15/1000 Gallons =
Fuel Savings Per Year	113 MMBTUS X $5.00/MMBTUS =
TOTAL SAVINGS PER YEAR	

Proprietary and Confidential
Intelligent Conservation Systems, Inc.

Potable Water Plant

Summary	Baseline	Proposed	Savings	$ Savings
kgal/yr	26,122	1,319	24,803	
kW	-	-	-	
MMBtu/yr	-	-	-	
Total				$ -

Remove Redundant Heaters	
Baseline kgal/yr	52,460
kgal Savings from other ECMs	24,901
Heating EFLH	1,437
Adressable Baseline kgal	26,122
% usage remaining from utility	95%
kgal usage remaining from utility	24,803

Geothermal Heatpump Installation at Sally Port

Electric Cost ($/kWh)	0
Demand Cost ($/kW)	0
Thermal Cost ($/MMBtu)	0

Summary	Baseline	Proposed	Savings	$ Savings
kWh/yr	12,892	2,558	10,333	$ -
kW			-	$ -
MMBtu/yr	-	-	-	$ -
Total				$ -

Equipment Name	Equipment Manufacturer	Model Number	Capacity Tons	Existing EER	Each Month kW	Cooling EFLH	Cooling kWh Existing	New EER	Each Month kW	Cooling EFLH	Cooling kWh Proposed	Cooling Type	Replace?
HVAC-59	x	x	4	9	4.7	607	2,833	43.5	1.0	607	586	DX	Y
Total							2,833				586		

Total kWh Saved	2,247

Equipment Name	Equipment Manufacturer	Model Number	Capacity Tons	Existing COP	Each Month kW	Heating EFLH	Heating kWh Existing	New COP	Each Month kW	Heating EFLH	Heating kWh Proposed	Heating Type	Replace?
HVAC-59	x	x	3.5	1	7	1,437	10,059	5.1	1	1,437	1,972		Y
Total							10,059				1,972		

Total kWh Saved	8,087

FAN ENERGY SAVINGS

PROJECT: SCI Mercer - Bidding Contractor

SITE: Mercer, PA **DATE:** 7/21/2023

INPUT DATA:

A	Operating Hours Per Day	24	HRS/DAY
B	Operating Days Per Week	7	DAYS/WK
C	Operating Weeks Per Year	52	WKS/YR
D	Horsepower of Fan Motor(s)	23	HP
E	Load Factor of Fan Motor(s)	0.90	
F	Cost Per Kilowatt Hour	$0.09	$/kWh

CONSTANT EXHAUST VOLUME ANALYSIS:

G	Total Time (A x B x C)	8,736	HRS/YR
H	Total kWh/HP/YR (0.746/System Effic. x G)	7,448	kWh/HP/YR

VARIABLE EXHAUST VOLUME ANALYSIS:

% Rated RPM I	% Run Time J	Time HRS/YR K=GxJ	Output kW/HP L	System Effic. M	Input kW/HP N=L/M	kWh/ HP/YR O=KxN
100%	12%	1048.32	0.746	0.875	0.853	893.8
90%	2%	174.72	0.544	0.875	0.622	108.6
80%	4%	349.44	0.382	0.875	0.437	152.5
70%	5%	436.8	0.256	0.875	0.292	127.7
60%	2%	174.72	0.161	0.875	0.184	32.2
50%	7%	611.52	0.093	0.875	0.107	65.2
40%	8%	698.88	0.048	0.875	0.055	38.1
30%	60%	5241.6	0.020	0.875	0.023	120.7
20%	0%	0	0.006	0.875	0.007	0.0
10%	0%	0	0.001	0.875	0.001	0.0
0%	0%	0	0.000	0.875	0.000	0.0

P Total kWh/HP/YR (Total of Column O) 1538.8

CALCULATION: (H - P) x D x E x F

UNCONTROLLED COST = $13,105 /YEAR

SAVINGS = 122,322 kWh/YEAR

$10,397 /YEAR

© 2021 Melink Corp. All Rights Reserved

HEATING SAVINGS

PROJECT: SCI Mercer - Bidding Contractor

SITE: Mercer, PA **DATE:** 7/21/2023

INPUT DATA:

A Previous Net Exhaust Volume	16,750	CFM
B New Net Exhaust Volume (1)	7772	CFM
C Winter Building Temperature	68.0 (°F)	
D Previous Net Heat Load (2)	3,362,684	kBTU
E New Net Heat Load (2)	1,560,286	kBTU
F Operating Hours Per Day	24	HRS/DAY
G Operating Days Per Week	7	DAYS/WK
H Cost Per Fuel Unit (3)	$0.60	$/UNIT
I Heating Fuel Type		Natural Gas
J BTU Per Fuel Unit (4)	100	kBTU/UNIT
K System Efficiency (4)	1.0	
L Supply Air Heating Multiplier (5)	0.50	

UNCONTROLLED COST = $10,088 /YEAR 46%

CALCULATION: D x L x H / (J x K)

SAVINGS = 901,199 kBTU/YEAR
$5,407 /YEAR 54%

CALCULATION: (D-E) x L x H / (J x K)

NOTES:

(1) Determine the New Exhaust Volume by completing TABLE 1. The New Exhaust Volume equals the AVG % RPM x the Previous Exhaust Volume.

(2) Using design weather data via the Outdoor Airload Calculator and multiplied by days/year ratio.

(3) Using local energy costs.

(4) Using typical system efficiency.

(5) Estimation Factor

TABLE 1

% Rated RPM (F)	% Run Time (I)	F x I
100%	12%	12%
90%	2%	2%
80%	4%	3%
70%	5%	4%
60%	2%	1%
50%	7%	4%
40%	8%	3%
30%	60%	18%
20%	0%	0%
10%	0%	0%
	AVG % RPM =	46%

© 2021 Melink Corp. All Rights Reserved

Melink Energy solutions for a brighter tomorrow™

COOLING SAVINGS

PROJECT: SCI Mercer - Bidding Contractor

SITE: Mercer, PA **DATE:** 7/21/2023

INPUT DATA:

A	Previous Net Exhaust Volume	16,750	CFM
B	New Net Exhaust Volume (1)	7,772	CFM
C	Previous Net Cooling Load (2)	256,000	kBTU
D	New Net Cooling Load (2)	118,784	kBTU
E	Cost Per Fuel Unit (5)	$0.09	$/kWh
F	COP (6)	3	
G	Supply Air Cooling Multiplier (7)	0.50	
H	Building Cooling Set Point	72.0 (°F)	
I	Energy Content Per Fuel Unit	3.41	kBTU/Unit

UNCONTROLLED COST = $1,063 /YEAR 46%

CALCULATION: C x G x E / (I x F)

SAVINGS = 6,702 kWh/YEAR
$570 /YEAR 54%

CALCULATION: (C - D) x G x E / (I x F)

NOTES:

(1) Using New Exhaust Volume from HEATING SAVINGS on page 3. See Note 1.

(2) Obtained from Outdoor Airload Calculator

(3) Using design weather data.

(4) The multiplier corrects for actual % outside air.

(5) Using local energy costs.

(6) Using typical system efficiency.

(7) Using cooling supply air factor.

© 2021 Melink Corp. All Rights Reserved

Appendix 5:
Equipment Cut Sheets

(included w/ Electronic Copy only)

AlsoEnergy

The operating system for the grid of the future

DAS System Hardware Overview

AlsoEnergy wants to make it as easy as possible for you to plan and install your monitoring system hardware. That's why we provide your core hardware devices conveniently mounted and pre-wired in a weatherproof enclosure.

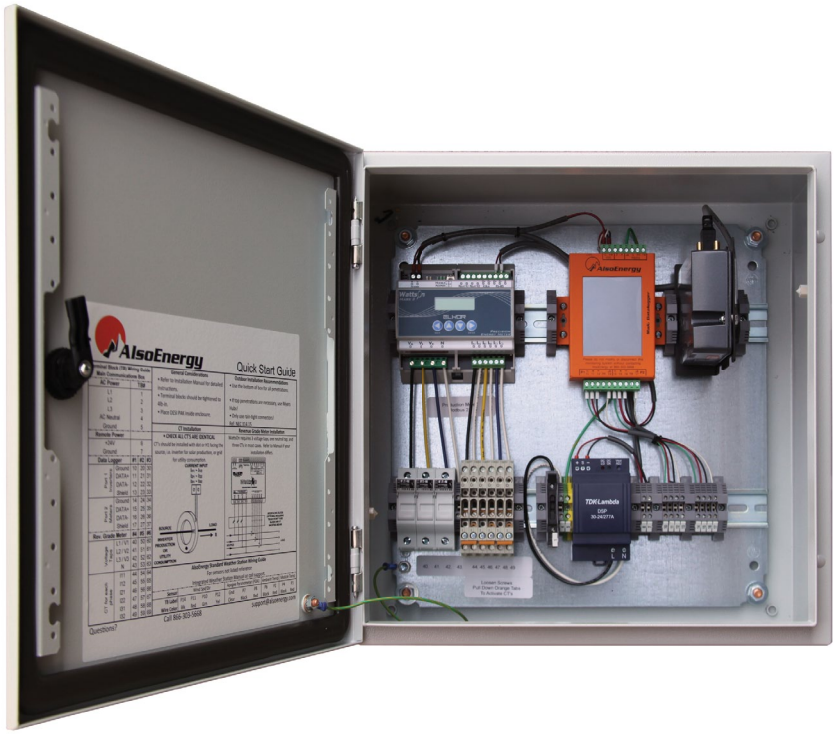

DAS Assembly

- Complete with all necessary DAS system hardware
- Preconfigured for plug-and-play capability with the PowerTrack Platform
- Hardware mounted and pre-wired
- NEMA 4 rated enclosures for exterior mounting
- Indoor mounting hardware included
- Built to your specifications
- ETL listed

End-to-end DAS systems from AlsoEnergy are tested, configured, assembled, and wired in our ETL listed facility in Boulder, CO.

To find out more or schedule a demo, contact us at alsoenergy.com

© AlsoEnergy, Inc / 5400 Airport Bvd. Ste. 100 Boulder, CO 80301 USA / 866.303.5668

Hardware Components

AlsoEnergy Data Logger

Pre-configured for use with PowerTrack
Accepts data from RS-485, RS-232, or Ethernet connected devices.

Includes internal storage capacity and a touch screen LCD display.

Energy Meter

Get revenue grade accuracy,
as required by many clients.
Accepts single phase, split phase, and three phase loads.

Includes LCD display.

Weather Stations and Environmental Sensors

Our high quality weather stations can accommodate any solar or wind metric requirements. Weather stations can fit into the main monitoring communications enclosure or have their own dedicated enclosure.

- Anemometers
- Pyranometers (Hukseflux, Apogee, Kipp and Zonen)
- Ambient temperature sensors
- Module Temperatures Sensors
- Basic and full weather station packages
- High temperature weather stations
- Remote and portable stations

Cellular Modem

- 4G network
- Low power consumption
- Remote management and configuration
- Works with most major North American cellular providers

Wireless Communications

- Ethernet radio
- Suitable for outdoor mounting
- Intra site communication
- Integrated antenna
- Remote oversight

© AlsoEnergy, Inc / 5400 Airport Bvd. Ste. 100 Boulder, CO 80301 USA / 866.303.5668

To find out more or schedule a demo, contact us at alsoenergy.com

25kW 208V, 1000Vdc String Inverters for North America

The 25kW (25kVA) CPS three phase string inverters are designed for rooftop and carport applications. The units are high performance, advanced and reliable inverters designed specifically for the North American environment and grid. High efficiency at 97.0% peak and 96.5% CEC, wide operating voltages, broad temperature ranges and a NEMA Type 4X enclosure enable this inverter platform to operate at high performance across many applications. The CPS 25KTL product ships with the Rapid Shutdown wire-box, fully integrated and separable with touch safe fusing, monitoring, and AC and DC disconnect switches. The integrated PLC transmitter in the Rapid Shutdown wire-box enables PVRSS certified module-level rapid shutdown when used with the APS RSD-S-PLC-A products. The CPS Flex Gateway enables monitoring, controls and remote product upgrades.

CPS SCA25KTL-DO/US-208

Key Features

- NEC 2017/2020 PVRSS Certified Rapid Shutdown
- NEC 2017 compliant & UL listed Arc-Fault circuit protection
- 15-90° Mounting orientation for low profile roof installs
- Optional Flex Gateway enables remote FW upgrades
- Integrated AC & DC disconnect switches
- 3 MPPT's with 2 inputs each for maximum flexibility
- Copper and Aluminum compatible AC connections
- NEMA Type 4X outdoor rated, tough tested enclosure
- UL1741 SA Certified to CA Rule 21, including SA14 FW and SA15 VW
- Separable wire-box design for fast service
- Standard 10 year warranty with extensions to 20 years
- Generous 1.8 DC/AC Inverter Load Ratio

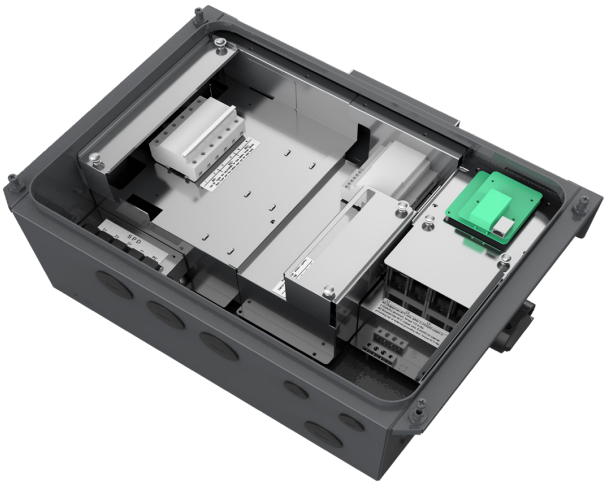

25KTL Rapid Shutdown Wire-box

©CHINT POWER SYSTEMS AMERICA 2020/10-MKT NA

Chint Power Systems America
6800 Koll Center Parkway, Suite 235 Pleasanton, CA 94566
Tel: 855-584-7168 Mail: AmericaSales@chintpower.com Web: www.chintpowersystems.com

Model Name	CPS SCA25KTL-DO/US-208
DC Input	
Max. PV Power	45kW (17kW per MPPT)
Max. DC Input Voltage	1000Vdc
Operating DC Input Voltage Range	200-950Vdc
Start-up DC Input Voltage / Power	330V / 80W
Number of MPP Trackers	3
MPPT Voltage Range @ PF>0.99	480-850Vdc
Max. PV Short-Circuit Current (Isc x 1.25)	135A (45A per MPPT)
Number of DC Inputs	6 inputs, 2 per MPPT
DC Disconnection Type	Load-rated DC switch
DC Surge Protection	Type II MOV, 2800V_C, 20kA I_{TM} (8/20…S)
AC Output	
Rated AC Output Power @ PF>0.99	25kW
Max. AC Apparent Power (Selectable)	25kVA
Rated Output Voltage	208Vac
Output Voltage Range[1]	183 - 228Vac
Grid Connection Type	3Φ / PE / N (Neutral optional)
Max. AC Output Current @208Vac	69.5A
Rated Output Frequency	60Hz
Output Frequency Range[1]	57 - 63Hz
Power Factor	>0.99 (±0.8 adjustable)
Current THD @ Rated Load	<3%
Max. Fault Current Contribution (1 Cycle RMS)	64.1A (0.92 PU)
Max. OCPD Rating	125A
AC Disconnection Type	Load-break rated AC switch
AC Surge Protection	Type II MOV, 1240V_C, 15kA I_{TM} (8/20…S)
System and Performance	
Topology	Transformerless
Max. Efficiency	97.0%
CEC Efficiency	96.5%
Stand-by / Night Consumption	<3W
Environment	
Enclosure Protection Degree	NEMA Type 4X
Cooling Method	Variable speed cooling fans
Operating Temperature Range[2]	-22°F to +140°F / - 30°C to +60°C
Non-Operating Temperature Range[3]	No low temp minimum to +158°F / +70°C maximum
Operating Humidity	0 to 100%
Operating Altitude	13,123.4ft / 4000m (derating from 9842.5ft / 3000m)
Audible Noise	<60dBA @ 1m and 25°C
Display and Communication	
User Interface and Display	LCD+LED
Inverter Monitoring	SunSpec, Modbus RS485
Site Level Monitoring	CPS Flex Gateway (1 per 32 inverters)
Modbus Data Mapping	CPS
Remote Diagnostics / FW Upgrade Functions	Standard / (with Flex Gateway)
Mechanical	
Dimensions (HxWxD)	39.4 x 23.6 x 10.24in. (1000 x 600 x 260mm)
Weight	Inverter: 123.5lbs/56kg; Wire-box: 33lbs/15kg
Mounting / Installation Angle[4]	15 to 90 degrees from horizontal (vertical or angled)
AC Termination	M8 Stud Type Terminal Block (Wire range: #6 - 3/0AWG CU/AL , Lugs not supplied)
DC Termination[5]	Screw Clamp, Neg. Busbar[5] Wire range: #14 - #6AWG CU
Fused String Inputs (2 per MPPT)[6]	20A fuses provided (Fuse values up to 30A acceptable)
Safety	
Certifications and Standards	UL1741SA-2016, UL1699B, UL1998, CSA-C22.2 NO.107.1-01, IEEE1547a-2014, FCC PART15
Selectable Grid Standard	IEEE 1547, CA Rule 21, ISO-NE, HECO
Smart-Grid Features	Volt-RideThru, Freq-RideThru, Ramp-Rate, Specified-PF, Volt-VAr, Freq-Watt, Volt-Watt
Warranty	
Standard	10 years
Extended Terms	15 and 20 years

1) The "Output Voltage Range" and "Output Frequency Range" may differ according to the specific grid standard.
2) Active Power Derating begins; at 45°C when PF=1 and MPPT≥Vmin, and at 50°C when PF=1 and MPPT V ≥ 700Vdc.
3) See user manual for further requirements regarding non-operating conditions.
4) Shade Cover accessory required for installation angles of 75 degrees or less.
5) RSD wire-box only includes fuses/fuseholders on the positive polarity, compliant with NEC 2017, 690.9 (C).
6) Fuse values above 20A have additional spacing requirements or require the use of the Y-Comb Terminal Block. See user manual for details.

100/125kW, 1500Vdc String Inverters for North America

CPS SCH100/125KTL-DO/US-600

The 100 & 125kW high power CPS three phase string inverters are designed for ground mount applications. The units are high performance, advanced and reliable inverters designed specifically for the North American environment and grid. High efficiency at 99.1% peak and 98.5% CEC, wide operating voltages, broad temperature ranges and a NEMA Type 4X enclosure enable this inverter platform to operate at high performance across many applications. The CPS 100/125kW products ship with the Standard or Centralized Wire-box, each fully integrated and separable with AC and DC disconnect switches. The Standard Wire-box inlcudes touch safe fusing for up to 20 strings. The CPS Flex Gateway enables communication, controls and remote product upgrades.

Key Features

- NFPA 70, NEC 2014 and 2017 compliant
- Touch safe DC Fuse holders adds convenience and safety
- CPS Flex Gateway enables remote FW upgrades
- Integrated AC & DC disconnect switches
- 1 MPPT with 20 fused inputs for maximum flexibility
- Copper and Aluminum compatible AC connections
- NEMA Type 4X outdoor rated, tough tested enclosure
- Advanced Smart-Grid features (CA Rule 21 certified)
- kVA Headroom yields 100kW @ 0.9PF and 125kW @ 0.95PF
- Generous 1.87 and 1.5 DC/AC Inverter Load Ratios
- Separable wire-box design for fast service
- Standard 5 year warranty with extensions to 20 years

100/125KTL Standard Wire-box

100/125KTL Centralized Wire-box

C US

This device complies with part 15 of the FCC Rules

© CHINT POWER SYSTEMS AMERICA 2020/01-MKT NA

Chint Power Systems America
6800 Koll Center Parkway, Suite 235 Pleasanton, CA 94566
Tel: 855-584-7168 Mail: AmericaSales@chintpower.com Web: www.chintpowersystems.com

Model Name	CPS SCH100KTL-DO/US-600	CPS SCH125KTL-DO/US-600
DC Input		
Max. PV Power	187.5kW	
Max. DC Input Voltage	1500V	
Operating DC Input Voltage Range	860-1450Vdc	
Start-up DC Input Voltage / Power	900V / 250W	
Number of MPP Trackers	1	
MPPT Voltage Range[1]	870-1300Vdc	
Max. PV Input Current (Isc x1.25)	275A	
Number of DC Inputs	20 PV source circuits, pos. & neg. fused (Standard Wire-box) 1 PV output circuit, 1-2 terminations per pole, non-fused (Centralized Wire-box)	
DC Disconnection Type	Load-rated DC switch	
DC Surge Protection	Type II MOV (with indicator/remote signaling), Up=2.5kV, In=20kA (8/20uS)	
AC Output		
Rated AC Output Power	100kW	125kW
Max. AC Output Power[2]	100kVA (111KVA @ PF>0.9)	125kVA (132KVA @ PF>0.95)
Rated Output Voltage	600Vac	
Output Voltage Range[3]	528-660Vac	
Grid Connection Type[4]	3Φ / PE / N (Neutral optional)	
Max. AC Output Current @600Vac	96.2/106.8A	120.3/127.2A
Rated Output Frequency	60Hz	
Output Frequency Range[3]	57-63Hz	
Power Factor	>0.99 (±0.8 adjustable)	>0.99 (±0.8 adjustable)
Current THD	<3%	
Max. Fault Current Contribution (1-cycle RMS)	41.47A	
Max. OCPD Rating	150A	175A
AC Disconnection Type	Load-rated AC switch	
AC Surge Protection	Type II MOV (with indicator/remote signaling), Up=2.5kV, In=20kA (8/20uS)	
System		
Topology	Transformerless	
Max. Efficiency	99.1%	
CEC Efficiency	98.5%	
Stand-by / Night Consumption	<4W	
Environment		
Enclosure Protection Degree	NEMA Type 4X	
Cooling Method	Variable speed cooling fans	
Operating Temperature Range	-22°F to +140°F / -30°C to +60°C (derating from +113°F / +45°C)	
Non-Operating Temperature Range[5]	-40°F to +158°F / -40°C to +70°C maximum	
Operating Humidity	0-100%	
Operating Altitude	8202ft / 2500m (no derating)	
Audible Noise	<65dBA@1m and 25°C	
Display and Communication		
User Interface and Display	LED Indicators, WiFi + APP	
Inverter Monitoring	Modbus RS485	
Site Level Monitoring	CPS Flex Gateway (1 per 32 inverters)	
Modbus Data Mapping	SunSpec/CPS	
Remote Diagnostics / FW Upgrade Functions	Standard / (with Flex Gateway)	
Mechanical		
Dimensions (WxHxD)	45.28x24.25x9.84in (1150x616x250mm) with Standard Wire-box 39.37x24.25x9.84in (1000x616x250mm) with Centralized Wire-box	
Weight	Inverter: 121lbs / 55kg; Wire-box: 55lbs / 25kg (Standard Wire-box); 33lbs / 15kg (Centralized Wire-box)	
Mounting / Installation Angle	15 - 90 degrees from horizontal (vertical or angled)	
AC Termination	M10 Stud Type Terminal Block [3Φ] (Wire range: 1/0AWG - 500kcmil CU/AL, Lugs not supplied) Screw Clamp Terminal Block [N] (#12 - 1/0AWG CU/AL)	
DC Termination	Screw Clamp Fuse Holder (Wire range: #12 - #6AWG CU) - Standard Wire-box Busbar, M8 PEMserts (Wire range: #1AWG - 250kcmil CU/AL, Lugs not supplied) - Centralized Wire-box	
Fused String Inputs	15A or 20A fuses provided (Determined by product SKU)	
Safety		
Safety and EMC Standard	UL1741-SA-2016, CSA-C22.2 NO.107.1-01, IEEE1547a-2014; FCC PART15	
Selectable Grid Standard	IEEE 1547a-2014, CA Rule 21, ISO-NE	
Smart-Grid Features	Volt-RideThru, Freq-RideThru, Ramp-Rate, Specified-PF, Volt-VAr, Freq-Watt, Volt-Watt	
Warranty		
Standard[6]	5 years	
Extended Terms	10, 15 and 20 years	

1) See user manual for further information regarding MPPT Voltage Range when operating at non-unity PF
2) "Max. AC Apparent Power" rating valid within MPPT voltage range and temperature range of -30°C to +40°C (-22°F to +104°F) for 100KW PF ≥0.9 and 125KW PF ≥0.95
3) The "Output Voltage Range" and "Output Frequency Range" may differ according to the specific grid standard.
4) Wye neutral-grounded, Delta may not be corner-grounded.
5) See user manual for further requirements regarding non-operating conditions.
6) 5 year warranty effective for units purchased after October 1st, 2019.

EAGLE
MODULES

THE MOST DEPENDABLE SOLAR BRAND

EAGLE 72HM G2

390–410 WATT • HALF CELL MONO PERC MODULE

Positive power tolerance of 0~+3%

- NYSE-listed since 2010, Bloomberg Tier 1 manufacturer
- Best-selling module globally for last 4 years
- Top performance in the strictest 3rd party labs
- 99.9% on-time delivery to the installer
- Automated manufacturing utilizing artificial intelligence
- Vertically integrated, tight controls on quality
- Premium solar panel factories in USA and Malaysia

LINEAR PERFORMANCE WARRANTY

25-Year Performance Warranty

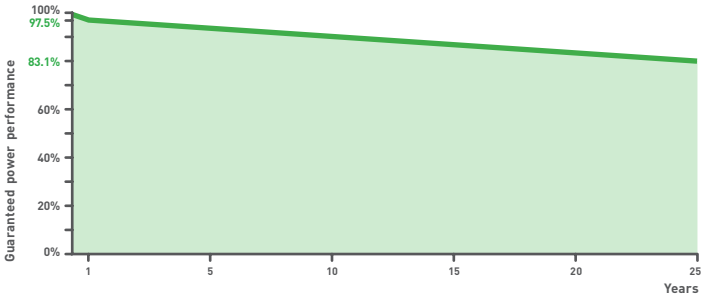

Nomenclature:
JKM410M - 72HL-V

Code	Cell	Code	Cell	Code	Certification
null	Full	null	Normal	null	1000V
H	Half	L	Diamond	V	1500V

- ISO9001:2008 Quality Standards
- ISO14001:2004 Environmental Standards
- IEC61215, IEC61730 certified products
- OHSAS18001 Occupational Health & Safety Standards
- UL1703 certified products

KEY FEATURES

Diamond Half Cell Technology
World-record breaking efficient mono PERC half cut solar cells deliver high power in a small footprint.

Designed for Long Life
Uses the same DuPont protective film as the Space Station, Mars Lander, and jetliners. 25-year warranty.

Shade Tolerant
Twin array design allows continued performance even with shading by trees or debris.

Power Boost in Cloudy Conditions
A special film diffuses light, boosting performance even with shading by trees or debris.

Protected Against All Environments
Certified to withstand humidity, heat, rain, marine environments, wind, hailstorms, and packed snow.

BUILDING YOUR TRUST IN SOLAR. JINKOSOLAR.US

JinKO Solar

ENGINEERING DRAWINGS

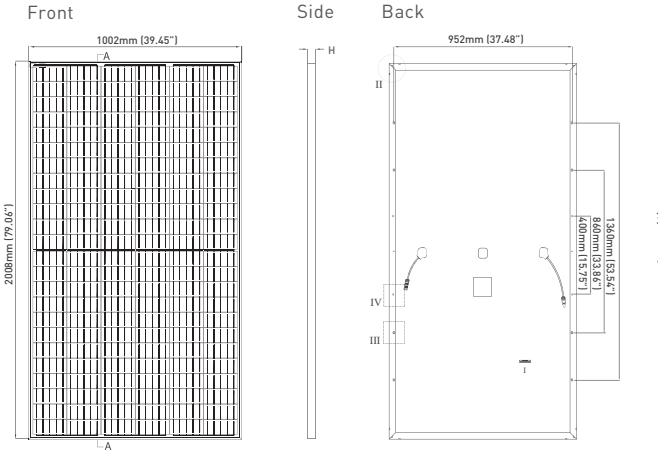

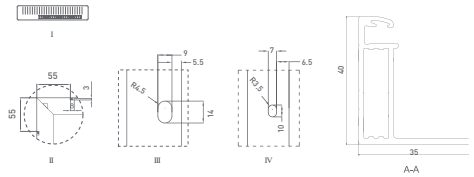

Length: ± 2mm
Width: ± 2mm
Height: ± 1mm
Row Pitch: ± 2mm

MECHANICAL CHARACTERISTICS

Cells	Mono PERC Diamond Cell (158.75x158.75mm)
No. of Half Cells	144 (2x72)
Dimensions	2008×1002×40mm (79.06×39.45×1.57in)
Weight	22.5kg (49.6lbs)
Front Glass	3.2mm, Anti-Reflection Coating High Transmission, Low Iron, Tempered Glass
Frame	Anodized Aluminum Alloy
Junction Box	IP67 Rated
Output Cables	12 AWG, 1400mm (55.12in) or Customized Length
Fire Type	Type 1
Pressure Rating	5400Pa (Snow) & 2400Pa (Wind)

TEMPERATURE CHARACTERISTICS

Temperature Coefficients of Pmax	-0.35%/°C
Temperature Coefficients of Voc	-0.29%/°C
Temperature Coefficients of Isc	0.048%/°C
Nominal Operating Cell Temperature (NOCT)	45±2°C

ELECTRICAL PERFORMANCE & TEMPERATURE DEPENDENCE

Current-Voltage & Power-Voltage Curves (410W)

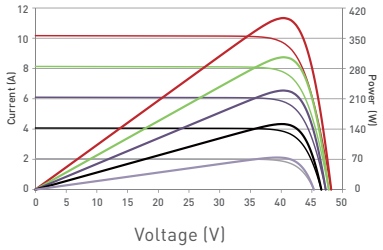

Temperature Dependence of Isc, Voc, Pmax

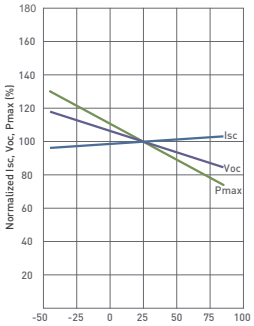

MAXIMUM RATINGS

Operating Temperature (°C)	-40°C~+85°C
Maximum System Voltage	1500VDC (UL and IEC)
Maximum Series Fuse Rating	20A

PACKAGING CONFIGURATION

(Two pallets = One stack)

27pcs/pallet, 54pcs/stack, 594pcs/40'HQ Container

ELECTRICAL CHARACTERISTICS

Module Type	JKM390M-72HL-V		JKM395M-72HL-V		JKM400M-72HL-V		JKM405M-72HL-V		JKM410M-72HL-V	
	STC	NOCT	STC	NOCT	STC	NOCT	STC	NOCT	STC	NOCT
Maximum Power (Pmax)	390Wp	287Wp	395Wp	291Wp	400Wp	294Wp	405Wp	298Wp	410Wp	302Wp
Maximum Power Voltage (Vmp)	39.64V	37.0V	39.90V	37.4V	40.16V	37.6V	40.42V	37.8V	40.68V	38.0V
Maximum Power Current (Imp)	9.84A	7.75A	9.90A	7.77A	9.96A	7.82A	10.02A	7.88A	10.08A	7.94A
Open-circuit Voltage (Voc)	48.6V	45.8V	48.8V	46.0V	49.1V	46.2V	49.4V	46.5V	49.6V	46.7V
Short-circuit Current (Isc)	10.46A	8.45A	10.54A	8.51A	10.61A	8.57A	10.69A	8.63A	10.76A	8.69A
Module Efficiency STC (%)	19.38%		19.63%		19.88%		20.13%		20.38%	

***STC:** Irradiance 1000W/m² Cell Temperature 25°C AM = 1.5
NOCT: Irradiance 800W/m² Ambient Temperature 20°C AM = 1.5 Wind Speed 1m/s

*Power measurement tolerance: ±3%

The company reserves the final right for explanation on any of the information presented hereby. JKM390-410M-72HL-V-A4-US

Enphase IQ Envoy

The **Enphase IQ Envoy**™ communications gateway delivers solar production and energy consumption data to Enphase Enlighten™ monitoring and analysis software for comprehensive, remote maintenance and management of the Enphase IQ System.

With integrated revenue grade production metering and optional consumption monitoring, Envoy IQ is the platform for total energy management and integrates with the Enphase Ensemble™and the Enphase IQ Battery™.

Smart

- Enables web-based monitoring and control
- Bidirectional communications for remote upgrades
- Supports power export limiting and zeroexport applications

Simple

- Easy system configuration using Enphase Installer Toolkit™ mobile app
- Flexible networking with Wi-Fi, Ethernet, or cellular

Reliable

- Designed for installation indoors or outdoors
- Five-year warranty

CERTIFIED SAFETY

To learn more about Enphase offerings, visit **enphase.com**

ENPHASE.

Enphase IQ Envoy

MODEL NUMBERS	
Enphase IQ Envoy™ ENV-IQ-AM1-240	Enphase IQ Envoy communications gateway with integrated revenue grade PV production metering (ANSI C12.20 +/- 0.5%) and optional consumption monitoring (+/- 2.5%). Includes one 200A continuous rated production CT (current transformer).
ACCESORIES (Order Seperately)	
Enphase Mobile Connect™ CELLMODEM-M1 (4G based LTE-M/5-year data plan) CELLMODEM-M1-B (4G-based LTE-M1/5-year data plan)	Plug and play industrial grade cellular modem with data plan for systems up to 60 microinverters. (Available in the US, Canada, Mexico, Puerto Rico, and the US Virgin Islands, where there is adequate cellular service in the installation area.)
Consumption Monitoring CT CT-200-SPLIT	Split-core consumption CTs enable whole home metering.
Ensemble Communications Kit COMMS-KIT-01	Installed at the IQ Envoy. For communications with Enphase Encharge™ storage and Enphase Enpower™ smart switch. Includes USB cable for connection to IQ Envoy or Enphase IQ Combiner™ and allows wireless communication with Encharge and Enpower.
POWER REQUIREMENTS	
Power requirements	120/240 VAC split-phase. Max 20 A overcurrent protection required.
Typical Power Consumption	5W
CAPACITY	
Number of microinverters polled	Up to 600
MECHANICAL DATA	
Dimensions (WxHxD)	21.3 x 12.6 x 4.5 cm (8.4” x 5” x 1.8”)
Weight	17.6 oz (498 g)
Ambient temperature range	-40° to 65° C (-40° to 149° F) -40° to 46° C (-40° to 115° F) if installed in an enclosure
Environmental rating	IP30. For installation indoors or in an NRTL-certified, NEMA type 3R enclosure.
Altitude	To 2000 meters (6,560 feet)
Production CT	- Limited to 200A of continuous current / 250A OCPD – 72kW AC - Internal aperture measures 19.36mm to support 250MCM THWN conductors (max) - UL2808 certified for revenue grade metering
Consumption CT	- For electrical services to 250A with parallel runs up to 500A - Internal aperture measures 0.84” x 0.96” (21.33mm x 24.38mm) to support 3/0 THWN conductor - UL2808 certified, for use at service entrance for services up to 250Vac
INTERNET CONNECTION OPTIONS	
Integrated Wi-Fi	802.11b/g/n
Ethernet	802.3, Cat5E (or Cat 6) UTP Ethernet cable (not included)
Mobile	CELLMODEM-M1 (4G) or CELLMODEM-M1-B (4G). Not included. Note that an Enphase Mobile Connect cellular modem is required for all Ensemble installations.
COMPLIANCE	
Compliance	UL 61010-1 CAN/CSA C22.2 No. 61010-1 47 CFR, Part 15, Class B, ICES 003 IEC/EN 61010-1:2010, EN50065-1, EN61000-4-5, EN61000-6-1, EN61000-6-2 Metering: ANSI C12.20 accuracy class 0.5 (PV production only)

To learn more about Enphase offerings, visit **enphase.com**

ENPHASE.

© 2021 Enphase Energy. All rights reserved. Enphase, the Enphase logo, IQ Envoy, and other trademarks or service names are the trademarks of Enphase Energy, Inc. Data subject to change. 06-30-2021

ENPHASE

DATA SHEET

IQ8 and IQ8+ Microinverters

Our newest IQ8 Microinverters are the industry's first microgrid-forming, software-defined microinverters with split-phase power conversion capability to convert DC power to AC power efficiently. The brain of the semiconductor-based microinverter is our proprietary application-specific integrated circuit (ASIC) which enables the microinverter to operate in grid-tied or off-grid modes. This chip is built in advanced 55nm technology with high speed digital logic and has super-fast response times to changing loads and grid events, alleviating constraints on battery sizing for home energy systems.

Part of the Enphase Energy System, IQ8 Series Microinverters integrate with the Enphase IQ Battery, Enphase IQ Gateway, and the Enphase App monitoring and analysis software.

Enphase 25 year limited warranty

IQ8 Series Microinverters redefine reliability standards with more than one million cumulative hours of power-on testing, enabling an industry-leading limited warranty of up to 25 years.

Connect PV modules quickly and easily to IQ8 Series Microinverters using the included Q-DCC-2 adapter cable with plug-n-play MC4 connectors.

UL CERTIFIED SAFETY

IQ8 Series Microinverters are UL Listed as PV Rapid Shut Down Equipment and conform with various regulations, when installed according to manufacturer's instructions.

Easy to install

- Lightweight and compact with plug-n-play connectors
- Power Line Communication (PLC) between components
- Faster installation with simple two-wire cabling

High productivity and reliability

- Produce power even when the grid is down*
- More than one million cumulative hours of testing
- Class II double-insulated enclosure
- Optimized for the latest high-powered PV modules

Microgrid-forming

- Complies with the latest advanced grid support**
- Remote automatic updates for the latest grid requirements
- Configurable to support a wide range of grid profiles
- Meets CA Rule 21 (UL 1741-SA) requirements

© 2022 Enphase Energy. All rights reserved. Enphase, the Enphase logo, IQ8 Microinverters, and other names are trademarks of Enphase Energy, Inc. Data subject to change.

IQ8SP-DS-0002-01-EN-US-2022-03-17

* Only when installed with IQ System Controller 2, meets UL 1741.

** IQ8 and IQ8Plus supports split phase, 240V installations only.

IQ8 and IQ8+ Microinverters

INPUT DATA (DC)		IQ8-60-2-US	IQ8PLUS-72-2-US
Commonly used module pairings[1]	W	235 – 350	235 – 440
Module compatibility		60-cell/120 half-cell	60-cell/120 half-cell, 66-cell/132 half-cell and 72-cell/144 half-cell
MPPT voltage range	V	27 – 37	29 – 45
Operating range	V	25 – 48	25 – 58
Min/max start voltage	V	30 / 48	30 / 58
Max input DC voltage	V	50	60
Max DC current[2] [module Isc]	A	15	
Overvoltage class DC port		II	
DC port backfeed current	mA	0	
PV array configuration		1x1 Ungrounded array; No additional DC side protection required; AC side protection requires max 20A per branch circuit	
OUTPUT DATA (AC)		**IQ8-60-2-US**	**IQ8PLUS-72-2-US**
Peak output power	VA	245	300
Max continuous output power	VA	240	290
Nominal (L-L) voltage/range[3]	V	240 / 211 – 264	
Max continuous output current	A	1.0	1.21
Nominal frequency	Hz	60	
Extended frequency range	Hz	50 – 68	
AC short circuit fault current over 3 cycles	Arms	2	
Max units per 20 A (L-L) branch circuit[4]		16	13
Total harmonic distortion		<5%	
Overvoltage class AC port		III	
AC port backfeed current	mA	30	
Power factor setting		1.0	
Grid-tied power factor (adjustable)		0.85 leading – 0.85 lagging	
Peak efficiency	%	97.5	97.6
CEC weighted efficiency	%	97	97
Night-time power consumption	mW	60	
MECHANICAL DATA			
Ambient temperature range		-40°C to +60°C (-40°F to +140°F)	
Relative humidity range		4% to 100% (condensing)	
DC Connector type		MC4	
Dimensions (HxWxD)		212 mm (8.3") x 175 mm (6.9") x 30.2 mm (1.2")	
Weight		1.08 kg (2.38 lbs)	
Cooling		Natural convection – no fans	
Approved for wet locations		Yes	
Pollution degree		PD3	
Enclosure		Class II double-insulated, corrosion resistant polymeric enclosure	
Environ. category / UV exposure rating		NEMA Type 6 / outdoor	
COMPLIANCE			
Certifications		CA Rule 21 (UL 1741-SA), UL 62109-1, UL1741/IEEE1547, FCC Part 15 Class B, ICES-0003 Class B, CAN/CSA-C22.2 NO. 107.1-01 This product is UL Listed as PV Rapid Shut Down Equipment and conforms with NEC 2014, NEC 2017, and NEC 2020 section 690.12 and C22.1-2018 Rule 64-218 Rapid Shutdown of PV Systems, for AC and DC conductors, when installed according to manufacturer's instructions.	

(1) No enforced DC/AC ratio. See the compatibility calculator at https://link.enphase.com/module-compatibility
(2) Maximum continuous input DC current is 10.6A (3) Nominal voltage range can be extended beyond nominal if required by the utility. (4) Limits may vary. Refer to local requirements to define the number of microinverters per branch in your area.

IRONRIDGE

QuickMount™ L-Mount®

Roof Protection without Compromise

The L-Mount® attachment, featuring an open-slotted L-Foot, is designed for cost-effective, single-bolt installation onto existing composition (asphalt) shingle roofs. The patented Elevated Water Seal Technology® has been integrated into the open-slotted L-Foot and flashing for fast installation, to provide maximum waterproofing.

To maximize versatility, the mount is available with a lag bolt or structural screw option for the strength you depend on. Both hardware options come with an installed EPDM bonded washer to seal and prevent water entry.

L-Mount features a 9x12" aluminum flashing with alignment guides and rounded corners, to easily slide under shingles and speed up installation on the roof. The kit is available in both mill and black finishes.

This component is part of the QuickMount™ product line.

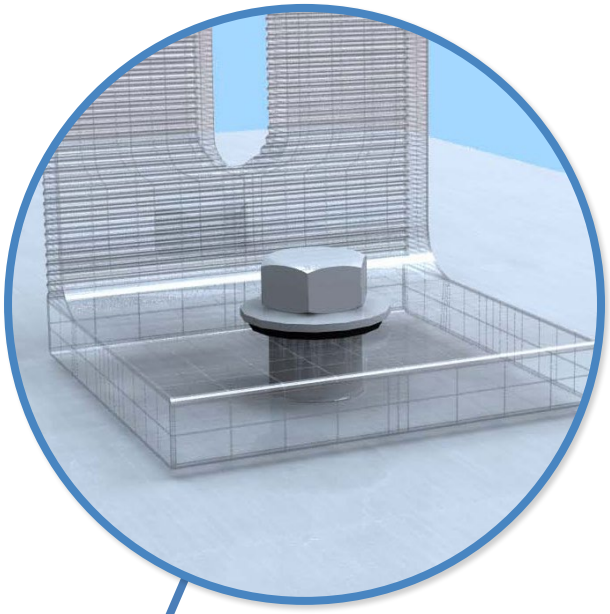

Elevated Water Seal Technology®

This proprietary flashing design cleverly places the roof penetration seal onto an aluminum flute fused into the flashing, above the bolt hole. The secondary EPDM rubber seal keeps water out—raised above the path of rain water and out of harm's way.

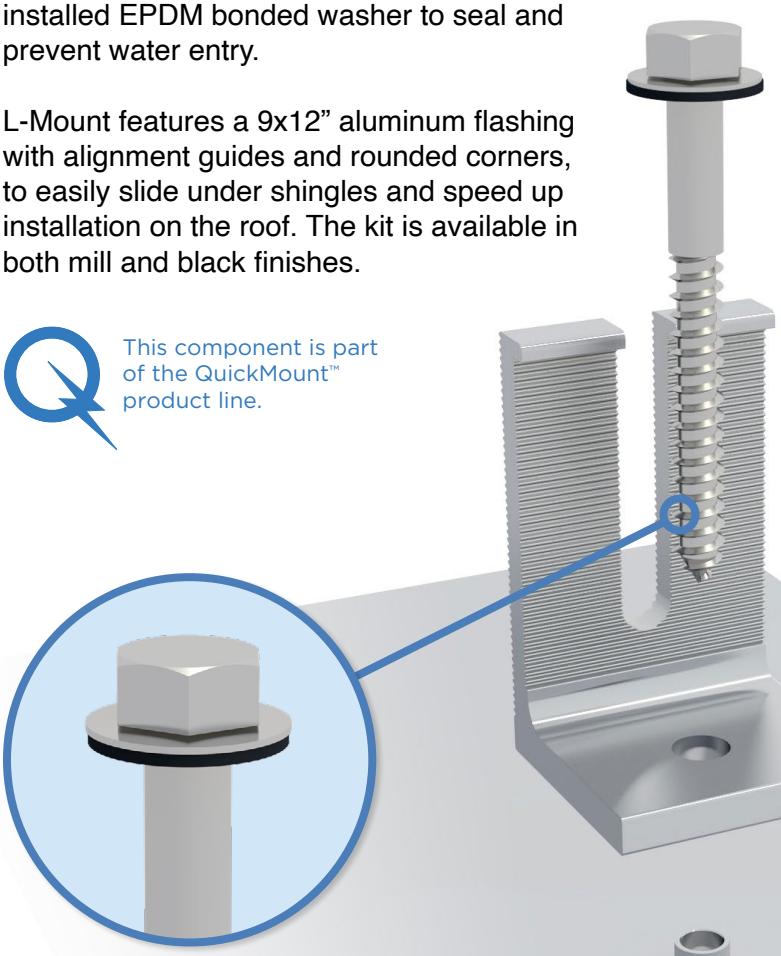

Pre-Installed Sealing Washer

Harware options include a lag bolt or structural screw. The EPDM washer arrives already attached.

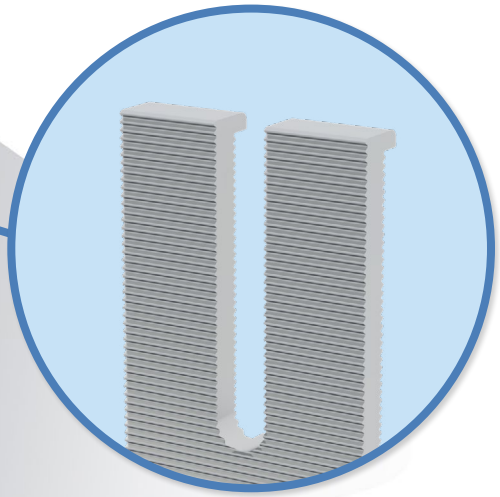

Open-Slotted L-Foot

The redesigned L-Foot can rotate 360 degrees for optimal adjustability and positioning of the rail, while the open slot allows the rail hardware to quickly drop-in and be compatible with any side-mounted racking on the market.

Intertek

25-Year Warranty

Product guaranteed free of impairing defects.

L-Mount® Installation Instructions

Installation Tools Required: tape measure, roofing bar, chalk line, stud finder, caulking gun, sealant compatible with roofing materials, drill with 7/32" or 1/8" bit, drill or impact gun with 1/2" socket.

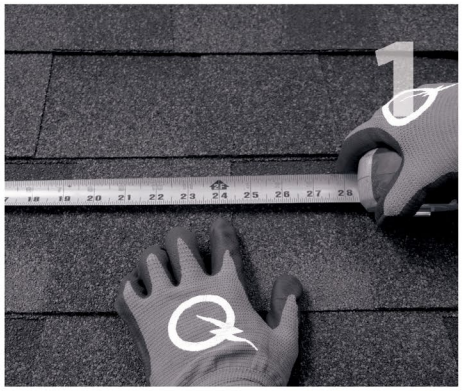

Locate, choose, and mark centers of rafters to be mounted. Select the courses of shingles where mounts will be placed.

Carefully lift composition roof shingle with roofing bar, just above placement of mount. Remove nails as required and backfill holes with aproved sealant. See "Proper Flashing Placement" on next page.

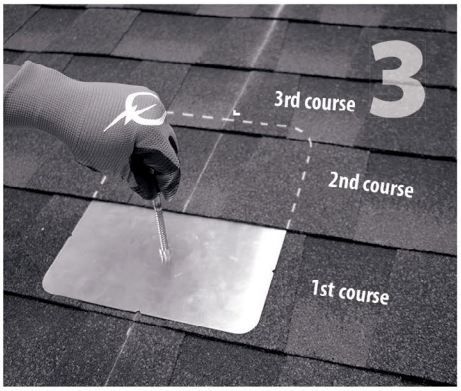

Insert flashing between 1st and 2nd course. Slide up so top edge of flashing is at least ¾" higher than the butt-edge of the 3rd course and lower flashing edge is above the butt-edge of 1st course. Mark center for drilling.

If attaching with lag bolt use a 7⁄32" bit (Lag). Use a ⅛" bit (ST) for attaching with the structural screw. Drill pilot hole into roof and rafter, taking care to drill square to the roof. Do not use mount as a drill guide. Drill a 2" deep hole into rafter.

Clean off any sawdust, and fill hole with sealant compatible with roofing materials.

Place L-foot onto elevated flute and rotate L-foot to desired orientation.

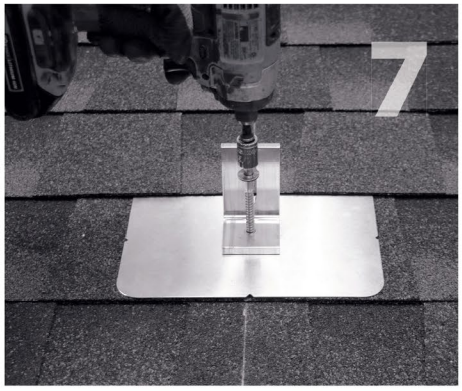

Prepare lag bolt or structural screw with sealing washer. Using a ½-inch socket on an impact gun, drive prepared lag bolt through L-foot until L-foot can no longer easily rotate. **DO NOT over-torque.** NOTE: Structural screw can be driven with T-30 hex head bit.

You are now ready for the rack of your choice. Follow all the directions of the rack manufacturer as well as the module manufacturer. NOTE: Make sure top of L-Foot makes solid contact with racking.

All roofing manufacturers' written instructions must also be followed by anyone modifying a roof system. Consult the roof manufacturer's specs and instructions prior to working on the roof.

© 2021 IronRidge, Inc. All rights reserved. Visit www.ir-patents.com for patent information. Version 1.21

IRONRIDGE

XR Rail Family

Solar Is Not Always Sunny

Over their lifetime, solar panels experience countless extreme weather events. Not just the worst storms in years, but the worst storms in 40 years. High winds capable of ripping panels from a roof, and snowfalls weighing enough to buckle a panel frame.

XR Rails are the structural backbone preventing these results. They resist uplift, protect against buckling and safely and efficiently transfer loads into the building structure. Their superior spanning capability requires fewer roof attachments, reducing the number of roof penetrations and the amount of installation time.

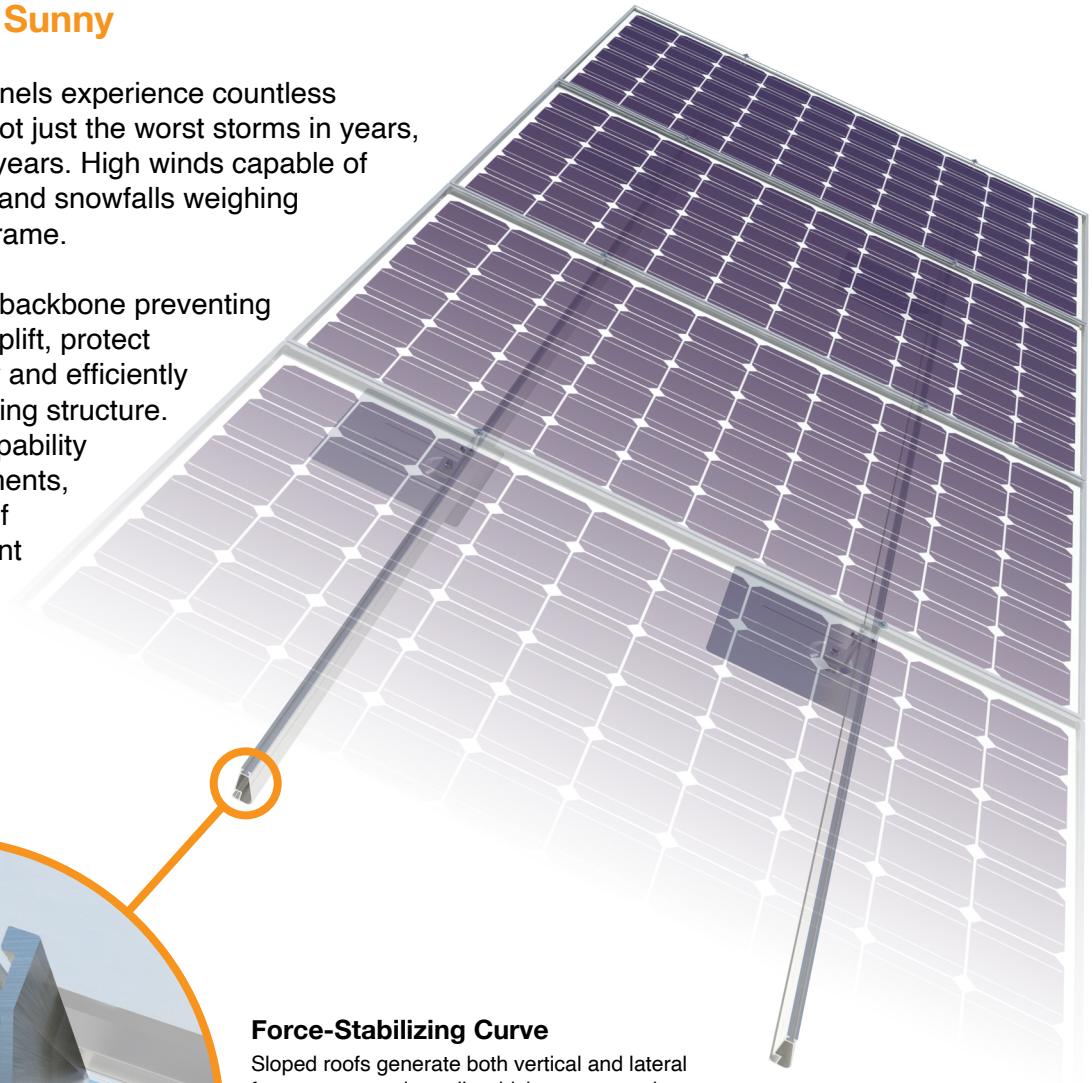

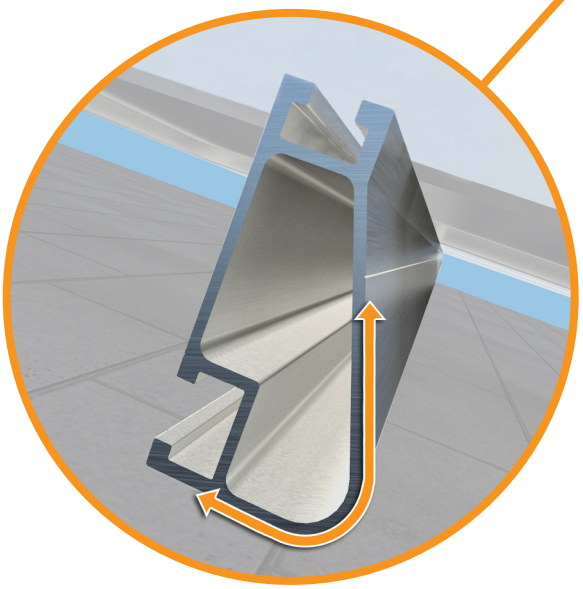

Force-Stabilizing Curve

Sloped roofs generate both vertical and lateral forces on mounting rails which can cause them to bend and twist. The curved shape of XR Rails is specially designed to increase strength in both directions while resisting the twisting. This unique feature ensures greater security during extreme weather and a longer system lifetime.

Compatible with Flat & Pitched Roofs

XR Rails are compatible with FlashFoot and other pitched roof attachments.

IronRidge offers a range of tilt leg options for flat roof mounting applications.

Corrosion-Resistant Materials

All XR Rails are made of 6000-series aluminum alloy, then protected with an anodized finish. Anodizing prevents surface and structural corrosion, while also providing a more attractive appearance.

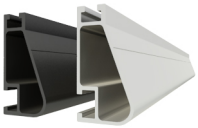

XR Rail Family

The XR Rail Family offers the strength of a curved rail in three targeted sizes. Each size supports specific design loads, while minimizing material costs. Depending on your location, there is an XR Rail to match.

XR10

XR10 is a sleek, low-profile mounting rail, designed for regions with light or no snow. It achieves spans up to 6 feet, while remaining light and economical.

- 6' spanning capability
- Moderate load capability
- Clear & black anodized finish
- Internal splices available

XR100

XR100 is the ultimate residential mounting rail. It supports a range of wind and snow conditions, while also maximizing spans up to 10 feet.

- 10' spanning capability
- Heavy load capability
- Clear & black anodized finish
- Internal splices available

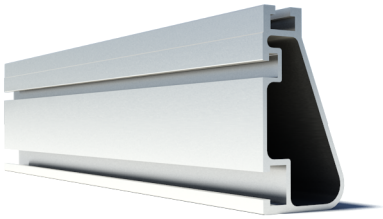

XR1000

XR1000 is a heavyweight among solar mounting rails. It's built to handle extreme climates and spans up to 12 feet for commercial applications.

- 12' spanning capability
- Extreme load capability
- Clear anodized finish
- Internal splices available

Rail Selection

The table below was prepared in compliance with applicable engineering codes and standards.* Values are based on the following criteria: ASCE 7-16, Gable Roof Flush Mount, Roof Zones 1 & 2e, Exposure B, Roof Slope of 8 to 20 degrees and Mean Building Height of 30 ft. Visit IronRidge.com for detailed certification letters.

Load		Rail Span					
Snow (PSF)	Wind (MPH)	4'	5' 4"	6'	8'	10'	12'
None	90	XR10		XR100		XR1000	
	120						
	140						
	160						
20	90						
	120						
	140						
	160						
30	90						
	160						
40	90						
	160						
80	160						
120	160						

*Table is meant to be a simplified span chart for conveying general rail capabilities. Use approved certification letters for actual design guidance.

© 2020 IronRidge, Inc. All rights reserved. Visit www.ironridge.com or call 1-800-227-9523 for more information. Version 1.20

Solar Foundations® USA

Innovative. Adaptable. Grounded.

SFUSA®

Ground Mount

Adaptable Ground Screw Fixed Tilt System

The SFUSA® Ground Mount system is the optimal solution for residential and light commercial solar projects. By custom designing and manufacturing components in-house, Solar Foundations' structure fits and functions together seamlessly, installs in far less time and with greater strength. The highest quality materials such as high-grade steel fully galvanized in accordance with ASTM standards and high-strength aluminum alloys for our panel support rails are utilized for long-term durability. Designed to withstand high snow and wind areas, the UL 2703 classified system has an expected lifespan that exceeds multiple panel lifecycles. Thus, Solar Foundations' product maximizes the residual investment of your ground mount structure.

Features

Solar Foundations' patented rail design offers a simple connection detail between the panel support rail and the horizontal support beams.

The patented telescopic design of the SFUSA Wind Brace allows quick and easily adaptable length changes to match installation conditions where significant adjustability is required.

A two-man crew can typically install up to about a 25kW residential structure in a single day.

SFUSA has developed processes and equipment that permits the installation of our patent pending ground screws in any soil conditions including solid rock.

Our foundations feature wider spans between support columns and stronger members. We engineered our system to obtain a better balance between all of the system components, resulting in less ground penetrations, a lower installed cost and has allowed us to offer further cost optimizations and array configurations that are not typically available in the industry.

- ✓ *Allows for mounting panels in four-, five- or six-high in landscape orientation and can be adapted to custom configurations*
- ✓ *Durable design enables any wind speed and snow load*
- ✓ *0° to 40° tilt with multiple inter-row spacing options*
- ✓ *Compatible with a wide range of modules*
- ✓ *Pile verification report available after the installation has been completed*
- ✓ *25-year guarantee against failure*

Let us simplify your ground mount structure process.

FT4L
Fixed Tilt 4 Landscape

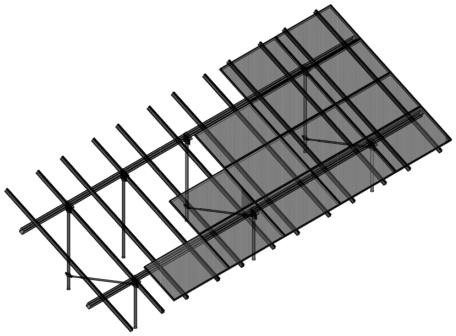

FT5L
Fixed Tilt 5 Landscape

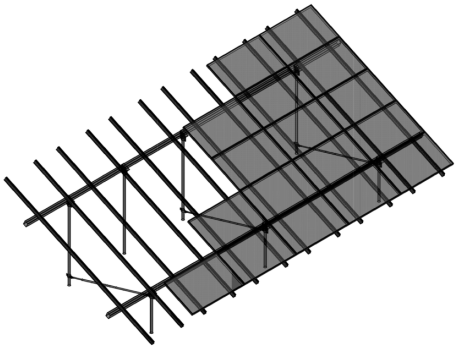

FT6L
Fixed Tilt 6 Landscape

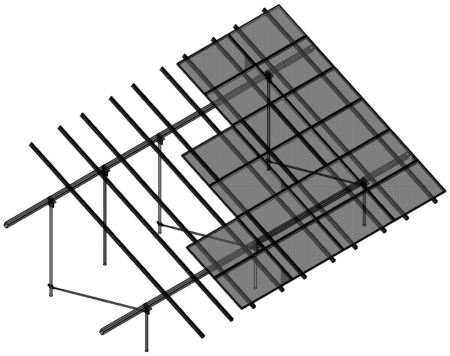

Custom

SFUSA® has the ability to come up with creative structures and products outside of our standard systems for unique situations.

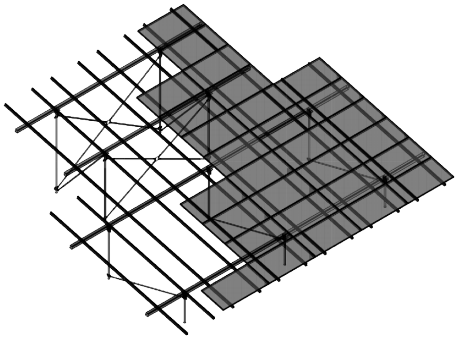

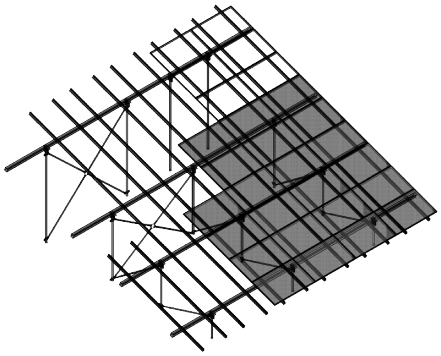

Materials	Hot-dipped galvanized steel, aluminum, stainless-steel mounting hardware
Tilt Angle	0° - 40°
Module Orientation	Landscape
Finishes	Galvanized
Foundation Options	Ground Screw - All soils including rock drilling
Grounding	Integrated or WEEB Bonding
Maximum Grade of Terrain	15°
Design Services	Signed & sealed structural drawings
Certifications	UL 2703
Warranty	25 years
Installation Services	Material, foundations, racking

LESS PILES
LARGER SPANS

UP TO 15°
TERRAIN SLOPES

We're more than just a racking company.

Substructure Assembly

Horizontal Support Beam

We provide maximum support for our structure by utilizing high yield strength hollow structural steel sections on our racking systems.

Diagonal Wind Brace and Insert

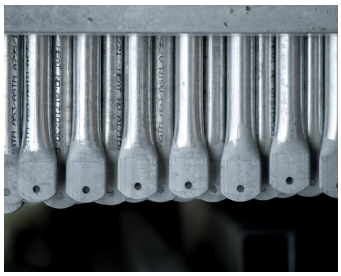

Our patented telescopic design allows quick and easily adaptable length changes to match installation conditions.

Diagonal Wind Brace Column Connector

Solar Foundations' hot-dipped galvanized custom Wind Brace Column Connectors fasten the Diagonal Wind Brace to a vertical column.

Column Caps

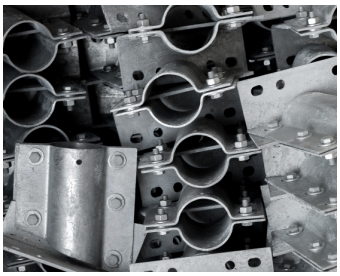

Our unique design allows a straightforward connection to the horizontal steel support beam.

Racking Assembly

Ground Mount Rail

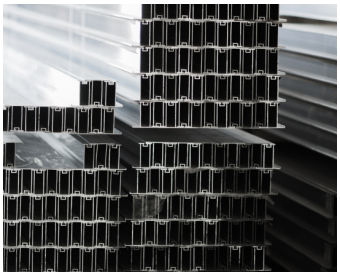

Solar Foundations' patented rail design offers a simple connection detail between the panel support rail and the horizontal support beams, allowing 6 modules per column in landscape orientation.

Module End Clamp

Our end clamp design securely fastens the top and bottom edges of a column of solar panels to the SF Rail.

Module Mid Clamp

The mid clamp fastens two adjoining solar panels in a column of solar panels to the SF Rail. Our sleek design with multiple serrations increases the holding power of the modules to our SF Rails.

Grounding

Our UL 2703 Certification encompasses the rail to beam and beam to pile connections, permitting the use of a single grounding lug for the entire racking system.

Contact us at **info@solarfoundationsusa.com** or **(855) 738-7200**.

Solar Foundations USA®, Inc.
1142 River Road, New Castle, DE 19720
Phone (855) 738-7200
Fax (866) 644-5665
www.solarfoundationsusa.com

© Solar Foundations USA®, All Rights Reserved | SFUSA_Ground_Mount_Rev0_20190411

Solar Foundations® USA

Single Phase Inverter with HD-Wave Technology

for North America

SE3000H-US / SE3800H-US / SE5000H-US / SE6000H-US / SE7600H-US / SE10000H-US / SE11400H-US

INVERTERS

12-25 YEAR WARRANTY

Optimized installation with HD-Wave technology

- Specifically designed to work with power optimizers
- Record-breaking 99% weighted efficiency
- Quick and easy inverter commissioning directly from a smartphone using the SolarEdge SetApp
- Fixed voltage inverter for longer strings
- Integrated arc fault protection and rapid shutdown for NEC 2014, NEC 2017 and NEC 2020 per article 690.11 and 690.12
- UL1741 SA certified, for CPUC Rule 21 grid compliance
- Small, lightweight, and easy to install both outdoors or indoors
- Built-in module-level monitoring
- Optional: Faster installations with built-in consumption metering (1% accuracy) and production revenue grade metering (0.5% accuracy, ANSI C12.20)

/ Single Phase Inverter with HD-Wave Technology

for North America

SE3000H-US / SE3800H-US / SE5000H-US / SE6000H-US/ SE7600H-US / SE10000H-US / SE11400H-US

MODEL NUMBER	SE3000H-US	SE3800H-US	SE5000H-US	SE6000H-US	SE7600H-US	SE10000H-US	SE11400H-US	
APPLICABLE TO INVERTERS WITH PART NUMBER	SEXXXXH-XXXXXBXX4							
OUTPUT								
Rated AC Power Output	3000	3800 @ 240V 3300 @ 208V	5000	6000 @ 240V 5000 @ 208V	7600	10000	11400 @ 240V 10000 @ 208V	VA
Maximum AC Power Output	3000	3800 @ 240V 3300 @ 208V	5000	6000 @ 240V 5000 @ 208V	7600	10000	11400 @ 240V 10000 @ 208V	VA
AC Output Voltage Min.-Nom.-Max. (211 - 240 - 264)	✓	✓	✓	✓	✓	✓	✓	Vac
AC Output Voltage Min.-Nom.-Max. (183 - 208 - 229)	-	✓	-	✓	-	-	✓	Vac
AC Frequency (Nominal)	59.3 - 60 - 60.5(1)							Hz
Maximum Continuous Output Current @240V	12.5	16	21	25	32	42	47.5	A
Maximum Continuous Output Current @208V	-	16	-	24	-	-	48.5	A
Power Factor	1, Adjustable - 0.85 to 0.85							
GFDI Threshold	1							A
Utility Monitoring, Islanding Protection, Country Configurable Thresholds	Yes							
INPUT								
Maximum DC Power @240V	4650	5900	7750	9300	11800	15500	17650	W
Maximum DC Power @208V	-	5100	-	7750	-	-	15500	W
Transformer-less, Ungrounded	Yes							
Maximum Input Voltage	480							Vdc
Nominal DC Input Voltage	380				400			Vdc
Maximum Input Current @240V(2)	8.5	10.5	13.5	16.5	20	27	30.5	Adc
Maximum Input Current @208V(2)	-	9	-	13.5	-	-	27	Adc
Max. Input Short Circuit Current	45							Adc
Reverse-Polarity Protection	Yes							
Ground-Fault Isolation Detection	600kΩ Sensitivity							
Maximum Inverter Efficiency	99	99.2						%
CEC Weighted Efficiency	99						99 @ 240V 98.5 @ 208V	%
Nighttime Power Consumption	< 2.5							W

(1) For other regional settings please contact SolarEdge support

(2) A higher current source may be used; the inverter will limit its input current to the values stated

/ Single Phase Inverter with HD-Wave Technology

for North America

SE3000H-US / SE3800H-US / SE5000H-US / SE6000H-US/ SE7600H-US / SE10000H-US / SE11400H-US

MODEL NUMBER	SE3000H-US	SE3800H-US	SE5000H-US	SE6000H-US	SE7600H-US	SE10000H-US	SE11400H-US	
ADDITIONAL FEATURES								
Supported Communication Interfaces	RS485, Ethernet, ZigBee (optional), Cellular (optional)							
Revenue Grade Metering, ANSI C12.20	Optional[3]							
Consumption metering								
Inverter Commissioning	With the SetApp mobile application using Built-in Wi-Fi Access Point for Local Connection							
Rapid Shutdown - NEC 2014, NEC 2017 and NEC 2020, 690.12	Automatic Rapid Shutdown upon AC Grid Disconnect							
STANDARD COMPLIANCE								
Safety	UL1741, UL1741 SA, UL1699B, CSA C22.2, Canadian AFCI according to T.I.L. M-07							
Grid Connection Standards	IEEE1547, Rule 21, Rule 14 (HI)							
Emissions	FCC Part 15 Class B							
INSTALLATION SPECIFICATIONS								
AC Output Conduit Size / AWG Range	1'' Maximum / 14-6 AWG					1'' Maximum /14-4 AWG		
DC Input Conduit Size / # of Strings / AWG Range	1'' Maximum / 1-2 strings / 14-6 AWG					1'' Maximum / 1-3 strings / 14-6 AWG		
Dimensions with Safety Switch (HxWxD)	17.7 x 14.6 x 6.8 / 450 x 370 x 174					21.3 x 14.6 x 7.3 / 540 x 370 x 185		in / mm
Weight with Safety Switch	22 / 10		25.1 / 11.4	26.2 / 11.9		38.8 / 17.6		lb / kg
Noise	< 25				<50			dBA
Cooling	Natural Convection							
Operating Temperature Range	-40 to +140 / -40 to +60[4]							˚F / ˚C
Protection Rating	NEMA 4X (Inverter with Safety Switch)							

(3) Inverter with Revenue Grade Meter P/N: SExxxxH-US000BNC4; Inverter with Revenue Grade Production and Consumption Meter P/N: SExxxxH-US000BNI4 . For consumption metering, current transformers should be ordered separately: SEACT0750-200NA-20 or SEACT0750-400NA-20. 20 units per box

(4) Full power up to at least 50˚C / 122˚F; for power de-rating information refer to: https://www.solaredge.com/sites/default/files/se-temperature-derating-note-na.pdf

How to Enable Consumption Monitoring

By simply wiring current transformers through the inverter's existing AC conduits and connecting them to the service panel, homeowners will gain full insight into their household energy usage helping them to avoid high electricity bills

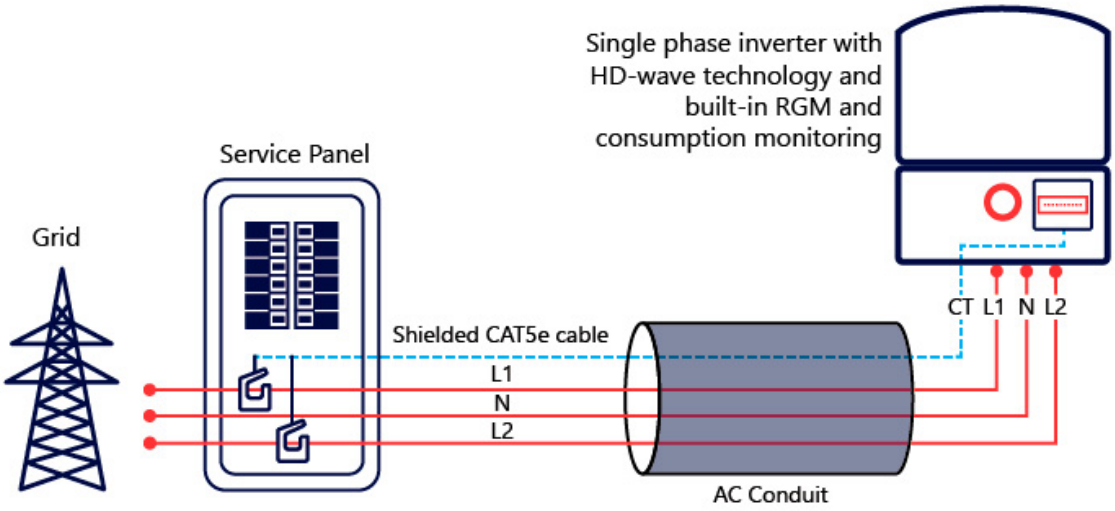

© SolarEdge Technologies, Inc. All rights reserved. SOLAREDGE, the SolarEdge logo, OPTIMIZED BY SOLAREDGE are trademarks or registered trademarks of SolarEdge Technologies, Inc. All other trademarks mentioned herein are trademarks of their respective owners. Date: 12/2020/V01/ENG NAM. Subject to change without notice.

RoHS

Power Optimizer

For North America

P370 / P400 / P401 / P485 / P505

POWER OPTIMIZER

25 YEAR WARRANTY

PV power optimization at the module level

- Specifically designed to work with SolarEdge inverters
- Up to 25% more energy
- Superior efficiency (99.5%)
- Mitigates all types of module mismatch losses, from manufacturing tolerance to partial shading
- Flexible system design for maximum space utilization
- Fast installation with a single bolt
- Next generation maintenance with module-level monitoring
- Meets NEC requirements for arc fault protection (AFCI) and Photovoltaic Rapid Shutdown System (PVRSS)
- Module-level voltage shutdown for installer and firefighter safety

/ Power Optimizer

For North America

P370 / P400 / P401 / P485 / P505

Optimizer model (typical module compatibility)	P370 (for higher-power 60 and 72-cell modules)	P400 (for 72 & 96-cell modules)	P401 (for high power 60 and 72-cell modules)	P485 (for high-voltage modules)	P505 (for higher current modules)	
INPUT						
Rated Input DC Power(1)	370	400	430	485	505	W
Absolute Maximum Input Voltage (Voc at lowest temperature)	60	80	60	125(2)	83(2)	Vdc
MPPT Operating Range	8 - 60	8 - 80	8 - 60	12.5 - 105	12.5 - 83	Vdc
Maximum Short Circuit Current (Isc)	11	10.1	12.5	11	14	Adc
Maximum DC Input Current	13.75	12.5	14.65	12.5	17.5	
Maximum Efficiency	99.5					%
Weighted Efficiency	98.8					%
Overvoltage Category	II					
OUTPUT DURING OPERATION (POWER OPTIMIZER CONNECTED TO OPERATING SOLAREDGE INVERTER)						
Maximum Output Current	15					Adc
Maximum Output Voltage	60			80		Vdc
OUTPUT DURING STANDBY (POWER OPTIMIZER DISCONNECTED FROM SOLAREDGE INVERTER OR SOLAREDGE INVERTER OFF)						
Safety Output Voltage per Power Optimizer	1 ± 0.1					Vdc
STANDARD COMPLIANCE						
EMC	FCC Part 15 Class B, IEC61000-6-2, IEC61000-6-3					
Safety	IEC62109-1 (class II safety), UL1741, NEC/PVRSS					
Material	UL94 V-0, UV Resistant					
RoHS	Yes					
INSTALLATION SPECIFICATIONS						
Maximum Allowed System Voltage	1000					Vdc
Compatible inverters	All SolarEdge Single Phase and Three Phase inverters					
Dimensions (W x L x H)	129 x 153 x 27.5 / 5.1 x 6 x 1.1	129 x 153 x 33.5 / 5.1 x 6 x 1.3	129 x 153 x 29.5 / 5.1 x 6 x 1.16	129 x 159 x 49.5 / 5.1 x 6.3 x 1.9	129 x 162 x 59 / 5.1 x 6.4 x 2.3	mm / in
Weight (including cables)	630 / 1.4	750 / 1.7	655 / 1.5	845 / 1.9	1064 / 2.3	gr / lb
Input Connector	MC4(3)			MC4(3)	MC4(3)	
Input Wire Length(4)	0.16 / 0.5					m / ft
Output Wire Type / Connector	Double Insulated / MC4					
Output Wire Length	1.2 / 3.9					m / ft
Operating Temperature Range(5)	-40 to +85 / -40 to +185					˚C / ˚F
Protection Rating	IP68 / NEMA6P					
Relative Humidity	0 - 100					%

(1) Rated power of the module at STC will not exceed the optimizer "Rated Input DC Power". Modules with up to +5% power tolerance are allowed
(2) NEC 2017 requires max input voltage be not more than 80V
(3) For other connector types please contact SolarEdge
(4) Longer inputs wire lengths are available for use. For 0.9m input wire length order P401-xxxLxxx
(5) For ambient temperature above +85°C / +185°F power de-rating is applied. Refer to Power Optimizers Temperature De-Rating Technical Note for more details: https://www.solaredge.com/sites/default/files/se- temperature-derating-note-na.pdf

PV System Design Using a SolarEdge Inverter(6)(7)		Single Phase HD-Wave	Single phase	Three Phase for 208V grid	Three Phase for 277/480V grid	
Minimum String Length (Power Optimizers)	P370, P400, P401	8		10	18	
	P485, P505	6		8	14	
Maximum String Length (Power Optimizers)		25		25	50	
Maximum Power per String		5700(8) (6000 with SE7600-US - SE11400-US)	5250(8)	6000(9)	12750(10)	W
Parallel Strings of Different Lengths or Orientations		Yes				

(6) For detailed string sizing information, refer to http://www.solaredge.com/sites/default/files/string_sizing_na.pdf
(7) It is not allowed to mix P485/P505 with P370/P400/P401 in one string
(8) A string with more than 30 optimizers does not meet NEC rapid shutdown requirements, safety voltage will be above the 30V requirement
(9) For the 208V grid, it is allowed to install up to 6,500W per string when the maximum power difference between each string is 1,000W
(10) For 277/480V grid: it is allowed to install up to 15,000W per string when the maximum power difference between each string is 2,0000

© SolarEdge Technologies, Ltd. All rights reserved. SOLAREDGE, the SolarEdge logo, OPTIMIZED BY SOLAREDGE are trademarks or registered trademarks of SolarEdge Technologies, Inc. All other trademarks mentioned herein are trademarks of their respective owners. Date: July 12, 2022 DS-000044-NAM. Subject to change without notice.

Intertek RoHS

RBI GLIDE Wave

When EPCs and developers need a dependable, low-maintenance fixed-tilt ground mount system, they turn to RBI GLIDE Wave. With over 5 GW of projects deployed across the U.S., our flexible design can be adapted to meet the project specific needs on any site, no matter the challenges.

Value Engineered

- Multiple foundation types are available to meet any unique underground soil conditions.
- Arrays are designed using continuous rows to follow the existing terrain and minimize the number of foundations required.
- Raised purlin are utilized as an integrated bonding and grounding method, which is UL 2703 listed, eliminating the need for additional grounding clips or washers.
- Parts and components are domestically sourced and manufactured for faster turnaround times.

Efficient Installation

- Pre-assembled parts and components reduce the number of connections needed at each table/bay by up to 50%.
- Components are designed with adjustable tolerances to make field installation a smoother process.
- Dedicated project management and in-house installation teams capable of completing full structural installation of an array.
- Integrated wire management and equipment posts available to simplify eBOS installation.

Specifications

Wind Loads	170 mph+
Snow Loads	90 psf+
Pre-Assembled Parts	Reduced installation time
Slope	Accomodates up to 30%
Warranty	20 years
Post Type	Cee posts or I-beam options available
Module Configuration	Portrait or landscape (all module frame types)
Raised Purlin	Integrated bonding and grounding
Listing	UL 2703

KEYSTONE SINCE 1945 LIGHT MADE EASY®

ESSENTIAL SERIES
GENERAL PURPOSE LED BULBS

KT-LED9.5A19-O-8XX
REPLACEMENT LAMP

DESCRIPTION
9.5W A19 Lamp | 2700–5000K | >80 CRI | Omni-Directional

LAMP TYPE: A19
BASE TYPE: E26 (Medium)
WATTAGE: 9.5W
COLOR TEMPERATURE: 2700–5000K
COLOR RENDERING INDEX (CRI): >80
WARRANTY: 2 Years
RATED LIFE: L70 (15,000 Hours)

TYPICAL APPLICATIONS
- Table, Desk, and Floor Lamps
- Wall Sconces
- Surface Mount Ceiling Fixtures
- General Lighting
- Pendant Lights

PRODUCT FEATURES
- Energy Efficient, 80%+ Energy Savings over Legacy Equivalents
- Lower Heat Generation than Legacy Equivalents
- PF >0.70
- Complies with Part 15 of FCC
- Durable Plastic housing lowers the risk for breakage
- ANSI complaint construction ensures fitment for intended applications
- Operating temperature range –4ºF/–20ºC to 95ºF/35ºC
- Long Life minimizes replacement and maintenance costs
- Meets Energy Star requirements
- UL Listed
- Smooth diffused lens for comfortable glare free performance
- UL enclosed rated, suitable for use in totally enclosed luminaires
- Smooth, uniform dimming

ELECTRICAL AND PERFORMANCE SPECIFICATIONS

Keystone Catalog Number	Description	Color Temp	Input Voltage	Rated Lamp Wattage	Legacy Equivalent Wattage	Base Type	Lumens	CRI	Light Distribution	Dimmable	Efficacy
KT-LED9.5A19-O-827	A19 bulb. Omni-Directional, dimmable	2700K	120V	9.5W	60W halogen	E26	800	>80	230°	Yes	84 lm/W
KT-LED9.5A19-O-830	A19 bulb. Omni-Directional, dimmable	3000K	120V	9.5W	60W halogen	E26	800	>80	230°	Yes	84 lm/W
KT-LED9.5A19-O-835	A19 bulb. Omni-Directional, dimmable	3500K	120V	9.5W	60W halogen	E26	800	>80	230°	Yes	84 lm/W
KT-LED9.5A19-O-840	A19 bulb. Omni-Directional, dimmable	4000K	120V	9.5W	60W halogen	E26	800	>80	230°	Yes	84 lm/W
KT-LED9.5A19-O-850	A19 bulb. Omni-Directional, dimmable	5000K	120V	9.5W	60W halogen	E26	800	>80	230°	Yes	84 lm/W

KEYSTONE SINCE 1945 LIGHT MADE EASY®

ESSENTIAL SERIES
GENERAL PURPOSE LED BULBS

KT-LED9.5A19-O-8XX
REPLACEMENT LAMP

PHYSICAL CHARACTERISTICS

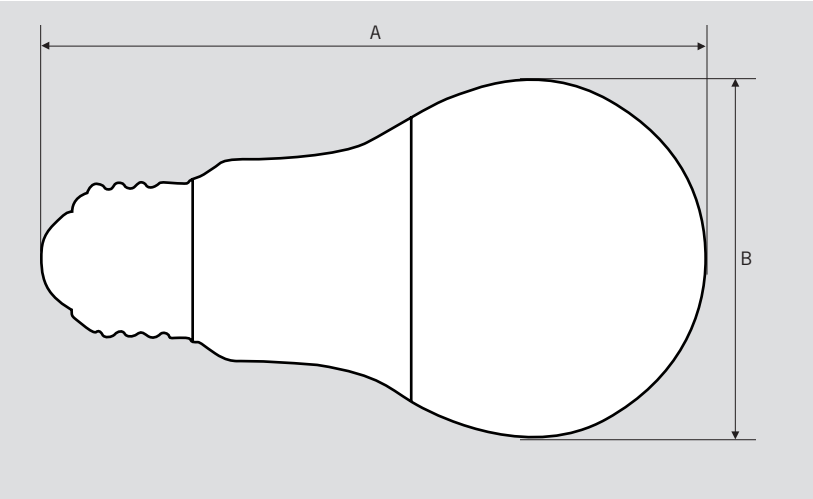

PACKAGING

Carton Quantity	60 pcs
Carton Dimensions	15.55" × 13.07" × 10"
Carton Weight	9.9 lbs

LAMP DIMENSIONS

A (Length)	4.33"
B (Diameter)	2.36"

BASE TYPE: E26 (Medium)

ORDERING INFORMATION

ORDER CODE	CARTON QUANTITY	ITEM STATUS
KT-LED9.5A19-O-8XX	60 pcs	Active

CATALOG NUMBER BREAKDOWN

KT-LED9.5A19-O-8XX

1 2 3 4 5 6 7

1 Keystone Technologies
2 LED Lamp
3 Wattage
4 Lamp Shape
5 Omni-Directional
6 800 Series
7 Color Temperature

KT-HBLED135-2F-8XX-VDIM-P

LED HIGH BAY FIXTURE

DESCRIPTION

Complete compact LED high bay fixture

APPLICATION

Used for commercial and industrial high bay lighting applications

c UL US LISTED 5 YEAR WARRANTY

PRODUCT FEATURES

- Architectural grade compact design
- Powered by Keystone 0-10V dimming LED drivers
- Frosted lens eliminates glare
- V-hook and chain mounting accessories included
- Compatible with Keystone SmartSafe emergency LED drivers; KT-EMRG-LED-5-500 -EN /DF or KT-EMRG-LED-12-1200-EN /DF are optimal for fixture level installation; mounting kit KT-HBLED-EM-BR-KIT required (sold separately)
- 0-10V dimming, 10% minimum
- Ambient operating temperature: -20ºC/-4ºF to 50ºC/122ºF
- UL Listed 1598: Suitable for dry and damp locations
- THD: <20%
- Power factor > 0.95
- LED chip lifetime, L70 >100,000 hours @ 25ºC/77ºF ambient fixture temperature

PERFORMANCE SPECIFICATIONS

Catalog Number	Color Temperature	Nominal Length	CRI	Input Voltage	Wattage	Lumen Output	Efficacy
KT-HBLED135-2F-840-VDIM-P	4000K	2'	>82	120-277V	135W	17,600	130 lm/W
KT-HBLED135-2F-850-VDIM-P	5000K	2'	>82	120-277V	135W	17,700	131 lm/W

PHOTOMETRIC SPECIFICATIONS

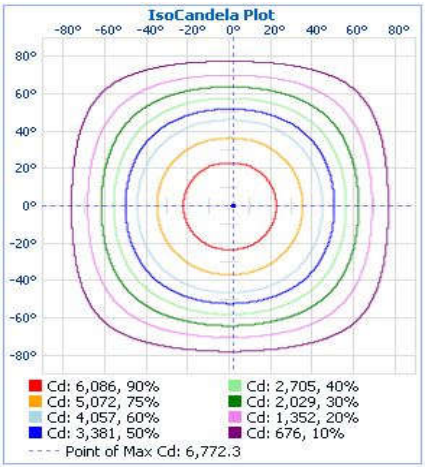

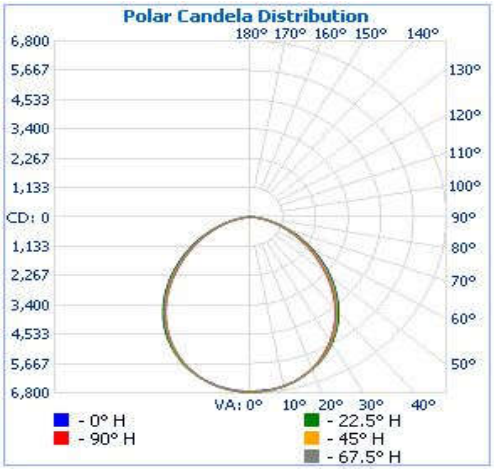

Zonal Lumen Summary

Zone	Lumens	% Luminaire
0-30	5,206.4	30.3%
0-40	8,422.8	49.1%
0-60	14,219.1	82.8%
60-90	2,902.7	16.9%
70-100	1,106.7	6.4%
90-120	14.5	0.1%
0-90	17,121.9	99.8%
90-180	42.8	0.2%
0-180	17,164.7	100%

KT-HBLED135-2F-8XX-VDIM-P

LED HIGH BAY FIXTURE

PHYSICAL SPECIFICATIONS

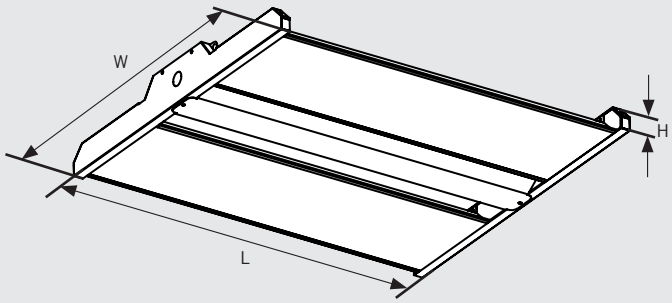

Length	24.40”
Width	15.00”
Height	2.40”
Weight	7 lbs

ORDERING INFORMATION

Order Code	Packaging Style	Pack Quantity	Item Status
KT-HBLED135-2F-8XX-VDIM-P	Carton Pack	1	Active

ACCESSORIES (SOLD SEPARATELY)

Accessory	Catalog Number	Description
High Bay Motion Sensor	HBE-PIR-120/277/347	Dual technology occupancy sensor for LED high bay fixtures
Wire Guard	KT-HBLED-WG-1-KIT	Wire guard for LED high bay fixtures; fits 90W, 105W, 135W, and 175W Keystone 2F high bay fixtures
Pendant Mount Kit	KT-HBLED-PM-1-KIT	Pendant mount kit for LED high bay fixtures; fits all Keystone 2F high bay fixtures
Surface Mount Kit	KT-HBLED-SM-1-KIT	Surface mount kit for LED high bay fixtures; fits all Keystone 2F high bay fixtures
SmartSafe Emergency Battery Backup	KT-EMRG-LED-5-500-EN /DF	5W, 500 lumen SmartSafe emergency battery back-up with dual flex cables
	KT-EMRG-LED-12-1200-EN /DF	12W, 1200 lumen SmartSafe emergency battery back-up with dual flex cables for remote mounting only
Emergency LED Backup Mounting Kit	KT-HBLED-EM-BR-KIT	Designed for use with KT-EMRG-LED-5-500-EN /DF and KT-EMRG-LED-12-1200-EN /DF

CATALOG NUMBER BREAKDOWN

KT-HBLED135-2F-8XX-VDIM-P

1 2 3 4 5 6 7 8

1 **Keystone Technologies**
2 **LED High Bay Fixture**
3 **Wattage**
4 **2’ Nominal Length, Frosted Lens**
5 **800 Series**
6 **Color Temperature**
7 **0-10V Dimming**
8 **Premium Series**

Project Name:	Type:
Part Number:	Date:

GREENCREATIVE

6” INNOFIT GEN 2 COMMERCIAL DOWNLIGHT

040921

SPECIFICATION FEATURES

- **Mechanical** - INNOFIT, with integrated driver, retrofits existing commercial housings and is field accessible from below the ceiling. Stainless steel spring action clips accommodate ½” to 2” ceiling thicknesses. Optional New Construction housing available.
- **Electrical** - Field select from three lumen outputs using SelectDrive technology. Universal 120-277V or 120V only, 50/60 Hz drivers available. Universal 0-10V drivers are dimmable to 5% with low end cutoff. 120V drivers are dimmable to 10% using forward or reverse phase dimmers.
- **Optical** - Self flanged, spun aluminum reflector with baffle trim for pleasant aesthetic in matte white finish. High resistance polycarbonate optical lens, with smooth diffusion. 105° beam angle. LED binned to 3-step SDCM to ensure color uniformity in 2700K, 3000K, 3500K, 4000K or 5000K CCT, with Minimum 80 CRI.
- **Thermal** - Fixture designed using passive thermal management to achieve a L70 rating of 50,000 hours.
  Fixture operating temperature: -13°F to 95°F (-25°C to 35°C).
- **Compliance and Warranty** - ETL Classified and Listed for wet locations. Certified air-tight per ASTM 283-04. IC Rated for direct contact with insulation. Complies with FCC 47CFR Part 15B consumer limits for EMI/RFI emissions. 5 year parts warranty for complete fixture. Optional 10 Year Extended Warranty available, subject to same terms, conditions and installation requirements as standard 5 Year Warranty.

ETL CLASSIFIED

Intertek Intertek

ENERGY STAR

BENEFITS

- Field select lumen output
- Quick and easy installation
- 0-10V or 120V dimmable
- Wet Location, IC and Airtight Rated
- Long life time, L70 Rated for 50,000 hours

APPLICATIONS

- New and retrofit construction
- Shallow plenum applications
- Commercial
- Retail & Office
- Education and Hospitality

ORDERING INFORMATION

Series	Size	CRI	CCT	Dimming
☑ **INFT** INNOFIT	☑ **6** 6" 800 / 1,100 / 1,600 lumens	☑ **8** CRI 80	☐ **27** 2700K	☐ **DIM010UNV** 120-277V, 0-10V (Dimmable to 5%)
			☐ **30** 3000K	☐ **DIM120V** 120V forward or reverse-phase line voltage (Dimmable to 10%)
			☐ **35** 3500K	
			☐ **40** 4000K	
			☐ **50** 5000K	

GREENCREATIVE

6” INNOFIT GEN 2 COMMERCIAL DOWNLIGHT

LINE DRAWINGS

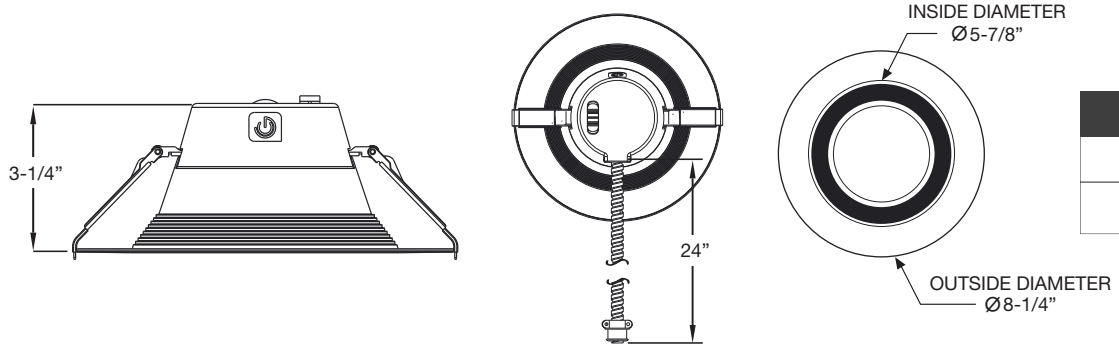

Ceiling Cutout	
Minimum	Maximum
Ø6”	Ø7-7/8”

TECHNICAL INFORMATION

Dimming	Input Voltage	Input Frequency	Input Current (Low / Med / High)	Input Power	THD Power	Power Factor
DIM120V	120V	50 / 60Hz	0.06 / 0.08 / 0.11A	6.5 / 9 / 13W	<20%	>0.9
DIM010VUNV	120V	50 / 60Hz	0.055 / 0.08 / 0.11A	6.5 / 9 / 13W	<20%	>0.9
	277V		0.032 / 0.04 / 0.052A			

PHOTOMETRY

INFT6/835/DIM010UNV (HIGH OUTPUT)

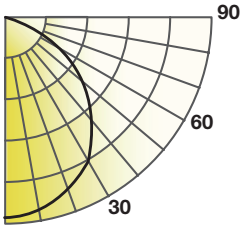

Lumens: 1,686 lm
CBCP: 673 cd
Power: 12.4 W
Efficacy: 136 lm/W
CRI: 80+
Spacing Criteria: 1.24
Beam Angle: 104.4°

Candlepower Distribution	
Angle (°)	Average (cd)
0	673
5	671
15	643
25	590
35	514
45	423
55	309
65	189
75	72
85	7
90	0

Initial Footcandles		
Height (ft)	Fc	Diameter (ft)
8	16	20.6
9	12	23.2
10	10	25.8
12	7	30.9
15	4	38.7

Zonal Lumen Summary		
Zone	Lumens	%Fixture
0-30	514	30%
0-40	833	49%
0-60	1,425	85%
0-90	1,686	100%

PERFORMANCE

CCT	2700K			3000K			3500K			4000K			5000K		
Output	Low	Med	High	Low	Med	High	Low	Med	High	Low	Med	High	Low	Med	High
Lumens	745	1,035	1,495	765	1,060	1,535	780	1,080	1,560	800	1,105	1,600	800	1,105	1,600
LPW	115	115	115	118	118	118	120	120	120	123	123	123	123	123	123

6” INNOFIT GEN 2 COMMERCIAL DOWNLIGHT

ACCESSORY ORDERING INFORMATION

Product	Model	Description	Pictures	Dimensions
98568	GOOFRING6	Goof ring for extending from 8-1/4” to 10-1/2”		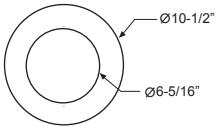
35122	NCFJB6	6" Round New Construction Rough-in Frame with Jbox		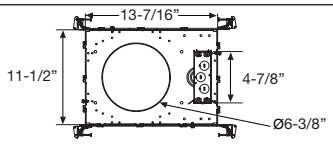
35126	NCFBFB	Field Installable Butterfly Brackets For New Construction Rough-in Frame		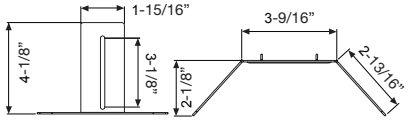
35125	NCFEMB	Field Installable Emergency Bracket For New Construction Rough-in Frame		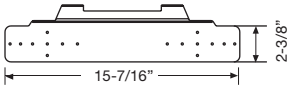
58012	35EMINVERTER	35W Emergency Inverter (Field Installation)		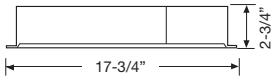
58013	35EMINVERTER/CEC	California Title 20 Compliant 35W Emergency Inverter (Field Installation)	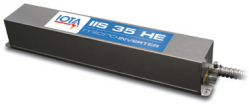	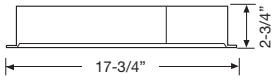
98003	23EMDRIVER	California Title 20 Compliant 23W Emergency LED Driver (Field Installation)		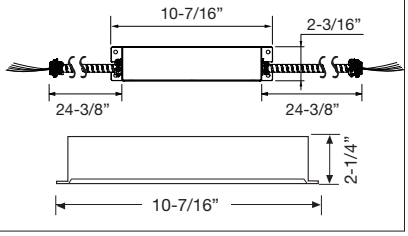

6” INNOFIT GEN 2 COMMERCIAL DOWNLIGHT

ORDERING GUIDE

Product	Model
35066	INFT6/827/DIM010UNV
35067	INFT6/830/DIM010UNV
35068	INFT6/835/DIM010UNV
35069	INFT6/840/DIM010UNV
35070	INFT6/850/DIM010UNV
35106	INFT6/827/DIM120V
35107	INFT6/830/DIM120V
35108	INFT6/835/DIM120V
35109	INFT6/840/DIM120V
35110	INFT6/850/DIM120V

10 YEAR EXTENDED WARRANTY

Model	INFT6/10YEARWARRANTY

Note: All rights reserved. All sizes and specifications are subject to change at any time without notice.

SINCE 1945 KEYSTONE

DIRECTDRIVE DX2

SINGLE- OR DOUBLE-ENDED LINE VOLTAGE LED TUBES

KT-LED10.5T8-48G-840-DX2 /G2

T8 LED LAMP

DESCRIPTION

10.5W T8 LED | 4000K | >83 CRI | High Efficiency | Single or Double-ended Wiring

LAMP TYPE: Linear	
BULB TYPE: T8 LED	
BASE TYPE: G13 (Medium Bi-Pin)	
WATTAGE: 10.5W	
COLOR TEMPERATURE: 4000K	
COLOR RENDERING INDEX (CRI): >83	
WARRANTY: 5 Years	

PRODUCT FEATURES

- Replacement for Conventional Fluorescent Lamp
- Single or Double-Ended Wiring
- 50,000+ Hour Lifetime
- Approximately 40% More Energy Efficient that Standard F32T8 Lamps
- Environmentally Friendly: No Mercury Used
- Instant Startup
- DLC Listed
- Frosted Lens Eliminates Pixelation
- UL Classified
- Operating Temperature: -20ºC/-4ºF to 45ºC/113ºF
- Integral Driver (Isolated), Eliminates the Need for External Driver or Ballast
- 110+ Lumens per Watt
- Compatible with KT-EMRG-LED-5-500-AC Emergency pack

OPERATING SPECIFICATIONS

ELECTRICAL CHARACTERISTICS

Input Voltage	Power Consumption	Power Factor	Input Current
120-277Vac	~10.5W	>0.9	0.09A @ 120V 0.04A @ 277V

PHOTOMETRIC CHARACTERISTICS

Color Temperature (CCT)	4000K
Luminous Flux	1700 lm
Color Rendering Index (CRI)	>83
Efficacy	162 lm/W
Beam Angle	240º
Visible Light Area	325º

RATED LIFE

L70 (Hours)	50,000

SPECTRAL DISTRIBUTION

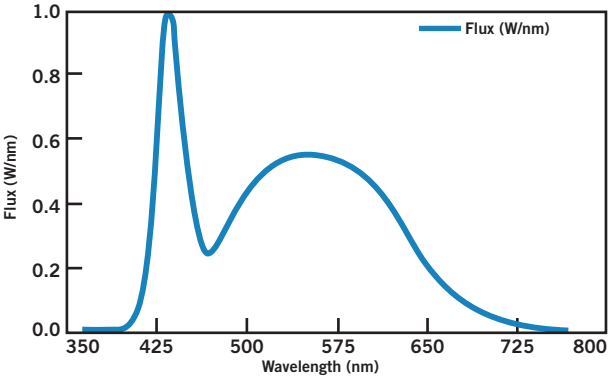

POLAR CANDELA DISTRIBUTION

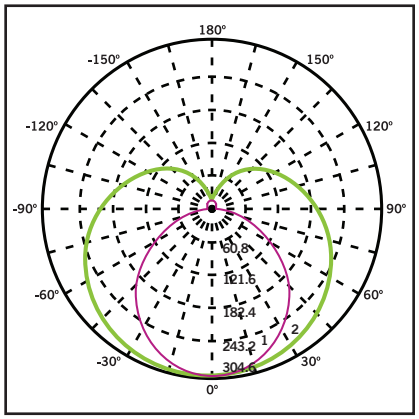

Maximum Candela = 1248.55
Located at Horizontal Angle = 0,
Vertical Angle 0

1. **Violet** Vertical Plane through Horizontal Angles (90-270)
2. **Green** Vertical Plane through Horizontal Angles (0-180)

KEYSTONE SINCE 1945

DIRECTDRIVE DX2
SINGLE- OR DOUBLE-ENDED LINE VOLTAGE LED TUBES

KT-LED10.5T8-48G-840-DX2 /G2

T8 LED LAMP

SINGLE-ENDED WIRING DIAGRAM

1. Cut all existing connections to ballast as shown below and remove ballast. See Figure A for typical ballast configurations. **Note: Single-ended wiring requires non-shunted lampholders.**

Figure A **Typical Ballast Configurations:**

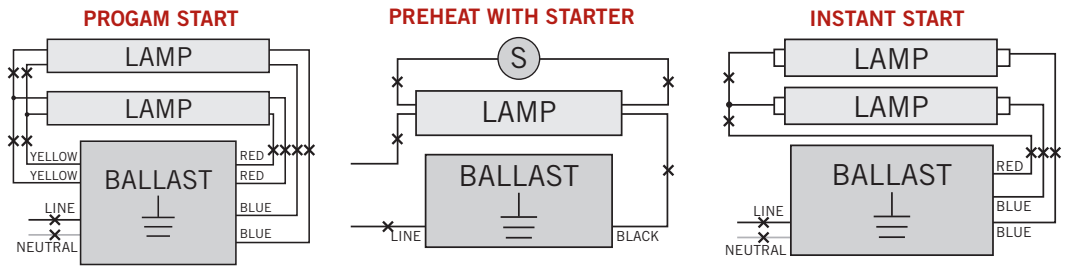

CAUTION: INSTANT START BALLASTS HAVE SHUNTED LAMPHOLDERS.

Typical Non-Shunted Lampholder

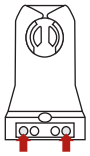

Connect wires directly to these terminals

CAUTION: For Single-ended wiring use only non-shunted lampholders.

For Single-ended wiring, do not install product in a fixture with shunted lampholders (found in all fixtures using instant start ballasts). If the current lampholders are shunted, remove them and replace them with non-shunted lampholders. Make new connections directly to terminals as indicated above.

Keystone can provide any style replacement lampholders. Call us at 800-464-2680.

2. Re-wire fixture as shown below.

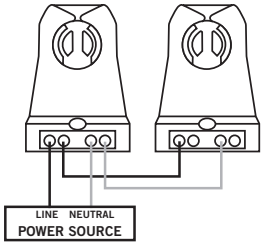

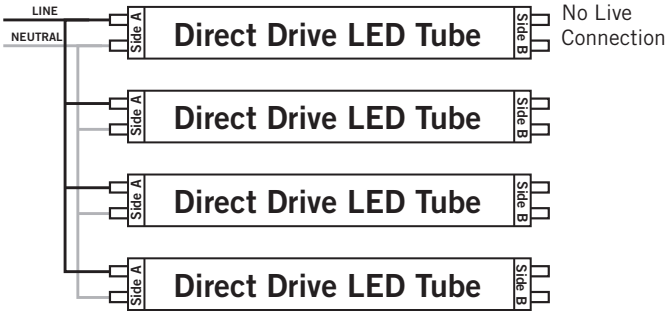

DOUBLE-ENDED WIRING DIAGRAM

1. Cut all existing connections to ballast as shown below and remove ballast. See Figure A above for typical ballast configurations.

2. Re-wire fixture as shown below. For Double-ended wiring, use either shunted or nonshunted lampholders.

   Note: There should not be any exposed wires at the end of installation.

Shunted Lampholders

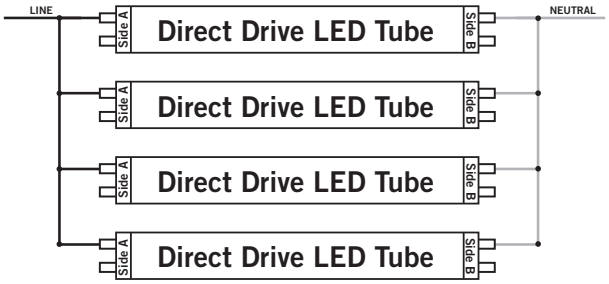

Nonshunted Lampholders

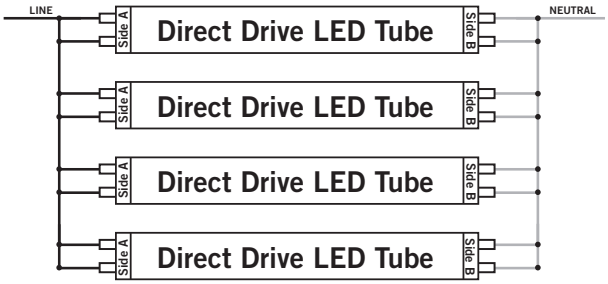

KEYSTONE SINCE 1945

DIRECTDRIVE DX2
SINGLE- OR DOUBLE-ENDED LINE VOLTAGE LED TUBES

KT-LED10.5T8-48G-840-DX2 /G2

T8 LED LAMP

PHYSICAL CHARACTERISTICS

LAMP DIMENSIONS

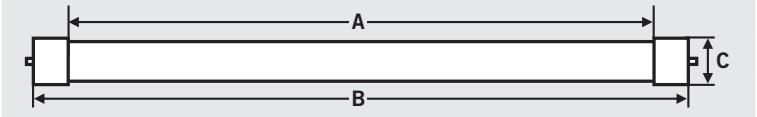

A (Illuminated Length)	42.63”
B (Body Length)	47.15”
C (Diameter)	1.10”

NOMINAL LENGTH: 48” **BASE TYPE:** G13 (Medium Bi-Pin)

ORDERING INFORMATION

ORDER CODE	PACKAGING STYLE	PACK QTY.	ITEM STATUS
KT-LED10.5T8-48G-840-DX2 /G2-CP	Carton Pack (Egg Crate Packaging)	25	Quick Ship

CATALOG NUMBER BREAKDOWN

KT-LED10.5T8-48G-840-DX2 /G2-CP

1 2 3 4 5 6 7 8 9 10 11

1 Keystone Technologies
2 LED Lamp
3 Wattage
4 Lamp Type
5 Nominal Length (inches)
6 Glass
7 800 Series
8 Color Temp.
9 Single or Double-Ended Wiring
10 Second Generation
11 Packaging Style

KT-WPLED40-M2-8XX-VDIM

ARCHITECTURAL 40W FULL-CUTOFF LED WALL PACK

DESCRIPTION

Architectural 40W Full-Cutoff LED Wall Pack | 120–277V Input | 4000–5000K | Medium-Size Bronze Housing | Wide Optic Lens

APPLICATION

Building Mount for exterior illumination (perimeters, pathways, loading docks, and other general security lighting requirements)

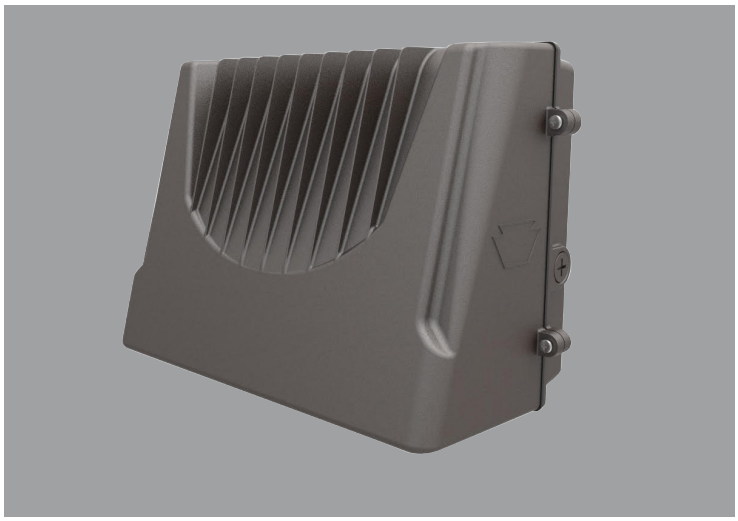

PRODUCT FEATURES

- Architectural full-cutoff design improves the appearance of building exteriors and optimizes functional light distribution
- Heavy-duty, die-cast aluminum housing features modern aesthetics while retaining (5) available 1/2" threaded conduit hubs: (1) on back and (1) on all four sides
- Powered by Keystone 0–10V dimming LED drivers
- Dark Sky friendly performance, eliminates undesirable sky glow and glare
- Features one translucent 3/4" threaded plug with anti-yellowing agent for use with photocell accessory KT-WPLED-PS-UV-KO
- Precision-crafted optical lens provides wide distribution pattern ideal for increased fixture spacing and uniformity
- Covers footprint of mid-size HID wallpacks
- Ambient operating temperature: –20ºC/–4ºF to 45ºC/113ºF
- UL listed for wet locations, IP65
- 0–10V dimming, 10% min
- Power Factor: >0.95
- THD: <20%
- LED chip lifetime: L70 >100,000 hrs @ 25ºC/77ºF ambient fixture temp
- Meets FCC Part 15, Part B, Class A standards for conducted and radiated emissions

ELECTRICAL SPECIFICATIONS

Catalog Number	Wattage	Lumens	Lumens Below 90º	Dimming	CCT	Efficacy	CRI	Housing Color	Input Voltage	Rated Life	Legacy Equivalent
KT-WPLED40-M2-840-VDIM	40W	5000 lm	4965 lm	0–10V	4000K	125 lm/W	>80	Bronze	120–277V	50,000 hrs	175W MH
KT-WPLED40-M2-850-VDIM		5200 lm	5160 lm		5000K	130 lm/W					

KT-WPLED40-M2-8XX-VDIM

ARCHITECTURAL 40W FULL-CUTOFF LED WALL PACK

PHOTOMETRIC SPECIFICATIONS

ISOCANDELA PLOT

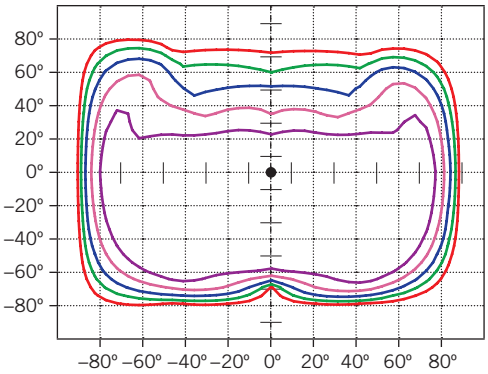

Cd: 156 (10%)
Cd: 250 (16%)
Cd: 390 (25%)
Cd: 624 (40%)
Cd: 983 (63%)
Cd: 1,560 (100%)

LUMINOUS INTENSITY DISTRIBUTION

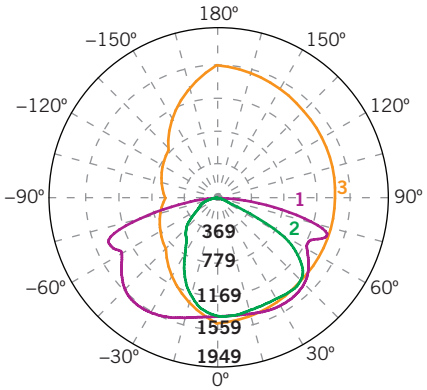

Average diffuse angle (50%): **125.1°**

1 Violet C0–C180

2 Green C90–C270

3 Orange G36

Unit: cd

FLUX DISTRIBUTION

Zone	Lumens	% Luminaire
Forward Light	3,171 lm	62.0%
0°–30°	596 lm	11.6%
30°–60°	1,594 lm	31.2%
60°–80°	912 lm	17.8%
80°–90°	70 lm	1.4%
Back Light	1,905 lm	37.2%
0°–30°	514 lm	10.1%
30°–60°	876 lm	17.1%
60°–80°	460 lm	9.0%
80°–90°	54 lm	1.1%
Up Light	39 lm	0.8%
90°–100°	3 lm	0.1%
100°–180°	36 lm	0.7%

BUG* Rating	
Asymmetrical Luminare Types	
Type I, II, III, IV	B2 U2 G1
Quadrilateral Symmetrical Luminare Types	
Type V, Area Light	B2 U2 G1

* ***B**acklight, **U**plight, **G**lare*

MOUNTING

Side view

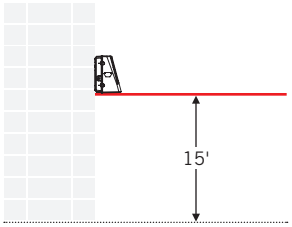

LIGHT DISTRIBUTION PATTERN

Isometric view from above; Luminaire mounted at 15'

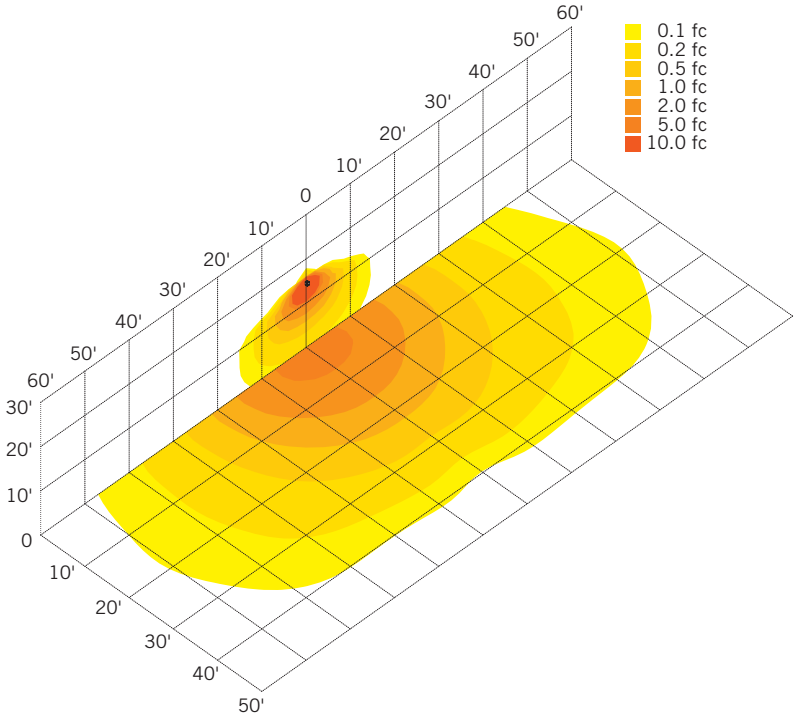

KT-WPLED40-M2-8XX-VDIM

ARCHITECTURAL 40W FULL-CUTOFF LED WALL PACK

PHYSICAL SPECIFICATIONS

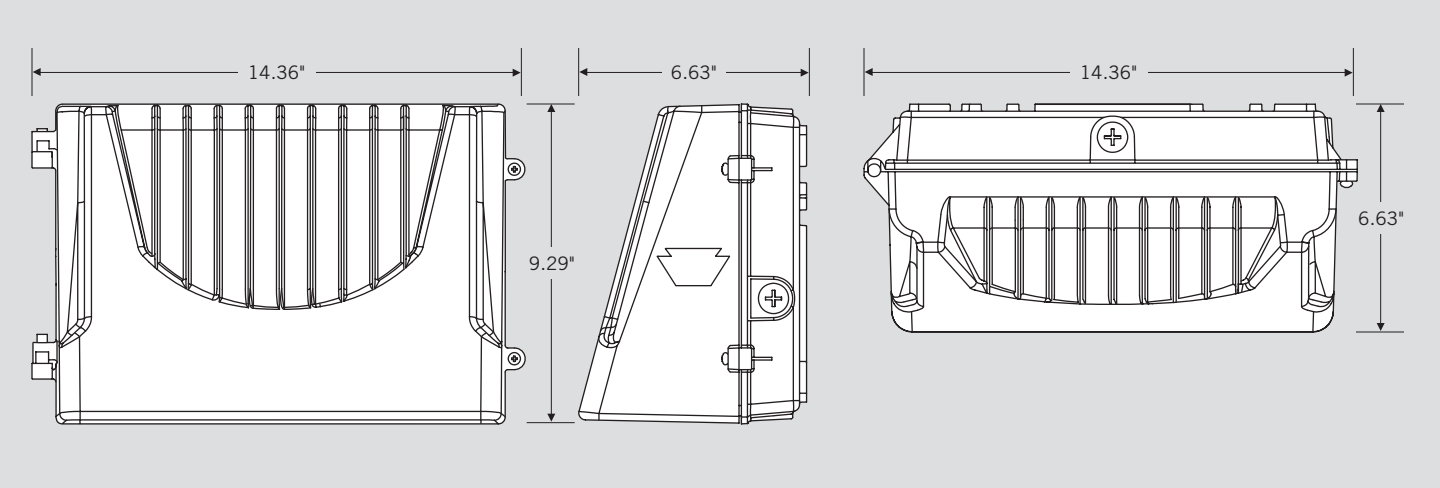

GENERAL SETUP INSTRUCTIONS

GENERAL WIRING DIAGRAM

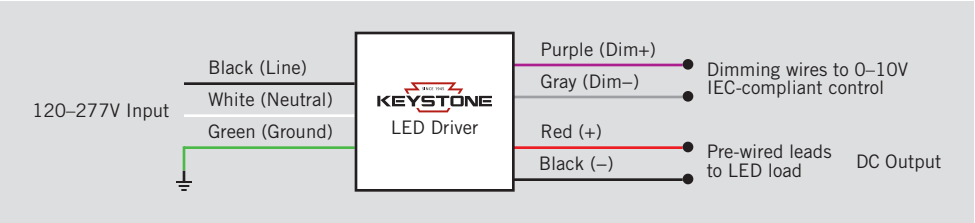

Caution: Before installing, make certain that AC power to the fixture is off.

Caution: The electrical rating of this product is 120–277V. Installer must confirm that there is 120–277V at the fixture before installation.

ACCESSORIES (SOLD SEPARATELY)

Catalog Number	Description
KTSP-10KV-C	Wallpack 10kV Surge Protector, Compact Design
KT-WPLED-PS-UV-KO	Keystone Wall Pack Button Photocell

KT-WPLED40-M2-8XX-VDIM

ARCHITECTURAL 40W FULL-CUTOFF LED WALL PACK

ORDERING INFORMATION

ORDER CODE	PACK QTY.	ITEM STATUS
KT-WPLED40-M2-840-VDIM	1	Quick Ship
KT-WPLED40-M2-850-VDIM	1	Quick Ship

CATALOG NUMBER BREAKDOWN

KT-WPLED40-M2-8XX-VDIM

1 2 3 4 5 6 7 8 9

1 Keystone Technologies
2 Fixture Type
3 LED Lamp
4 Max Wattage
5 Size
6 Style
7 CRI
8 Color
9 Dimming

2 Fixture Type

F	Flood
WP	Wallpack

5 Size

S	Small
M	Medium
L	Large

6 Style

1	Non-Cutoff
2	Full-Cutoff

7 CRI

8	>80
9	>90

8 Color

40	4000K
50	5000K

9 Dimming

VDIM	0–10V

ENPHASE

DATA SHEET

Enphase HCS-80 EVSE

The high-powered, robust HCS-80 EVSE (EV Supply Equipment) is built and tested to automaker standards to provide safe and reliable Level 2 charging for residential and commercial settings.

The 25-foot-long charging cable allows for flexible installation and ease-of-use and can be neatly stowed away using the integrated cable wrap and wall-mounted J1772 holster.

The tough NEMA 4 rated enclosure ensures you can install this unit indoors or outdoors with confidence. Ruggedized charging cables also help the charger to resist everyday wear-and-tear.

Convenient

- High-powered, Level 2 EV Charging Station charges your car up to 12x faster than the cord set that came with your electric vehicle
- Includes wall mounted J1772 connector holster
- Industry-leading 25-foot-long charging cable
- Integrated cable wrap helps to neatly stow away the cable cord when not in use
- LED lights indicate EVSE status

Durable

- Impact and crush resistant SAE J1772 connector
- Type 4X watertight and corrosion-resistant rubber over-molded EV connector
- Rugged, fully sealed NEMA 4 station enclosure for indoor/outdoor installations

Reliable

- Provides up to 64 A charging to all J1772-compatible EVs
- Backed by a 5-year warranty and an outstanding customer service experience with Enphase
- Comprehensive safety and efficiency compliance and certifications, including ENERGY STAR Certified and ETL listing

ENERGY STAR

C ETL US LISTED

© 2023 Enphase Energy. All rights reserved. Enphase, the e and CC logos, IQ, and certain other marks listed at https://enphase.com/trademark-usage-guidelines are trademarks of Enphase Energy, Inc. in the US and other countries. Data subject to change.

HCS-80-DS-0055-01-EN-US-2023-03-01

HCS-80 Series

ELECTRICAL SPECIFICATIONS	HCS-80 (HARD-WIRED)
Input voltage/input voltage range	208/240 VAC (L-L), single-phase/185 VAC – 264 VAC
Input voltage frequency	50/60 Hz
Circuit breaker requirement	Dedicated, two-pole 80 A
Input cable type	Pre-wired with (L1, L2, Gnd) 8 AWG service whip/ 3' (914.4 mm)
Maximum output current/output power	64 A continuous/15.36 kW
Output cable/cable length	Pre-wired with SAE J1772/25' (7.62 m) or 18' (5.49 m) [1]
MECHANICAL DATA	
Enclosure dimensions (L x W x D)	19.7" x 8.9" x 5.3" (500 mm x 226 mm x 135 mm)
Weight	17.8 lbs. (8.1 kg)
Enclosure mounting	Wall or pedestal mounted (pedestal sold separately)
ENVIRONMENTAL SPECIFICATIONS	
Environment rating	Indoor/outdoor rated
Operating temperature	-22°F to 122°F (-30°C to 50°C)
Storage temperature	-40°F to 176°F (-40°C to 80°C)
Enclosure rating	NEMA Type 4 - watertight
COMPLIANCE SPECIFICATIONS	
Codes and standards	NEC Article 625, SAE J1772, ENERGY STAR, UL
Safety compliance	UL 2594, UL 2251, UL 2231-1, UL 2231-2, UL 1998, UL 991 C22.2 No. 280-13, CSA C22.2 No. 282, CSA C22.2 No. 281.1, CSA C22.2 No. 281.2, CSA C22.2 No. 0.8 NMX-J-677-ANCE-2016, NMX-J-678-ANCE-2017, NMX-J-668-1-ANCE, NMX-J-668-2-ANCE, NOM-001-SCFI-2018, NMX-I-60950-1-NYCE-2015, NOM-024-SCFI-2013, NOM-208-SCFI-2016
EMC compliance	FCC Part 15 Class B
Short-circuit protection	5000 RMS Symmetrical Amps at 240 VAC
Open safety ground detection	Features a continuous earth ground monitor to ensure consistent connection to good earth ground
Ground fault detection	Ground fault protection integral, CCID 20 mA, auto reset
Auto-reclosure	System will automatically resume standard operation after minor power fault has cleared
FEATURES	
4 LED indicators	Amber LED: Power, Green LED: Charging, 1st Red LED: Power fault, 2nd Red LED: Charging fault
Optional cable management	18' output cable can be made retractable using this option[1] (Cable retractor sold separately)
Warranty	5 Years

SKUs	PRODUCT DESCRIPTION
HCS-80R-C22-L18-186	64 A charging, 240 VAC, 8 AWG service, 18' ruggedized J1772 connector 8 AWG ruggedized cable
HCS-80R-C22-L25-180	64 A charging, 240 VAC, 8 AWG service, 25' 8 AWG ruggedized J1772 connector

(1) The standard 25' cable can be replaced with an 18' cable. The 18' cable can be paired with a cable retractor for a better cable management experience.

PRODUCT NOTE

Super-E® motors
With AEGIS® bearing protection ring

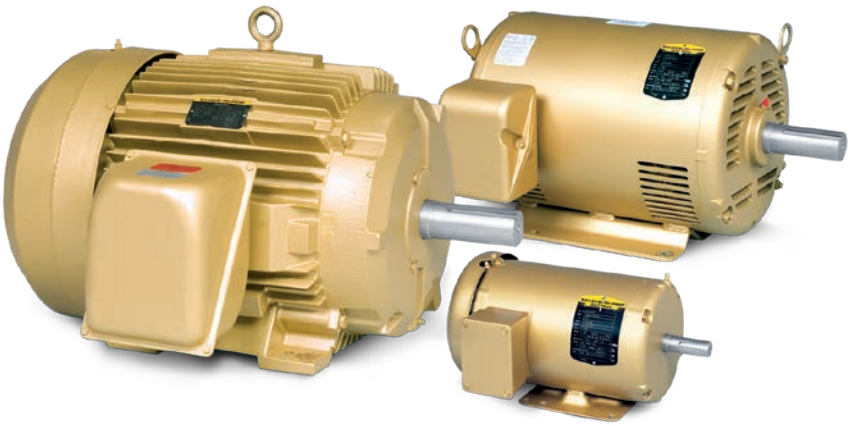

The need for proper motor grounding is extremely important in preventing premature bearing failure which could result in high maintenance costs or worse - facility downtime. While there are several techniques and practices to ground the motor, most common and economical is a shaft grounding device mounted to the frame of the motor.

BALDOR • RELIANCE

Applications
Heating, ventilation and air conditioning blower and fan motors, pump motors, and other general purpose applications using an adjustable speed drive.

Features
- 1 – 100 HP 56 thru 405T
- AEGIS® bearing protection ring installed internally
- Choice of TEFC or open drip proof enclosures
- Meet or exceed NEMA Premium® efficiencies for LEED and FEMP buildings
- Class H insulation system - meets NEMA MG 1 Part 31.4.4.2
- 1.15 service factor with Class B temperature rise at rated horsepower (sine wave)
- Heavy duty frames with cast endplates, suitable for mounting in any position
- Dynamically balanced rotors for reduced vibration and quiet operation
- Ball bearings with Mobil Polyrex® EM grease.
- Other speeds, horsepower ratings, and voltages available as custom motors
- AEGIS® SGR guarantees the prevention of bearing damage caused by drive-induced currents
- Additional off-the-shelf inventory available for quick shipment through our Mod-Express® department
- Three year limited product warranty

Premium efficient Super-E® motors

- 230/460
- Three phase
- C-Face
- TEFC
- Foot mounted
- Internal AEGIS® bearing protection ring
- 1 thru 50 Hp
- NEMA 56 thru 405T

NEMA Premium

Hp	RPM	NEMA frame	Cat. no.	"C" dim.	Aprx. wt. (lb)	FL eff.	Voltage	FL amps
1	3600	56C	CEM3545-G	12.23	32	77	230/460	1.4
	1800	143TC	CEM3546T-G	13.29	30	85.5	230/460	1.5
	1200	145TC	CEM3556T-G	13.29	43	82.5	230/460	1.8
1-1/2	3600	143TC	CEM3550T-G	13.29	36	84	230/460	1.9
	1800	145TC	CEM3554T-G	13.29	42	86.5	230/460	2.2
	1200	182TC	CEM3607T-G	16.54	76	87.5	230/460	2.4
2	3600	145TC	CEM3555T-G	13.29	46	85.5	230/460	2.5
	1800	145TC	CEM3558T-G	14.17	42	86.5	230/460	2.9
	1200	184TC	CEM3614T-G	18.05	94	88.5	230/460	3.5
3	3600	145TC	CEM3559T-G	14.17	53	86.5	230/460	3.6
		182TC	CEM3610T-G	15.16	50	86.5	230/460	3.6
	1800	182TC	CEM3611T-G	16.55	74	89.5	230/460	4.2
	1200	213TC	CEM3704T-G	19.76	135	89.5	230/460	4.6
5	3600	184TC	CEM3613T-G	16.55	76	88.5	230/460	5.9
	1800	184TC	CEM3615T-G	18.05	92	89.5	230/460	6.7
	1200	215TC	CEM3708T-G	19.20	154	89.5	230/460	7.3
7-1/2	3600	213TC	CEM3709T-G	18.63	133	89.5	230/460	9
	1800	213TC	CEM3710T-G	19.76	129	91.7	230/460	9.4
	1200	254TC	CEM2276T-G	23.3	281	91	230/460	11
10	3600	215TC	CEM3711T-G	18.63	118	90.2	230/460	11.8
	1800	215TC	CEM3714T-G	21.26	156	91.7	230/460	12
	1200	256TC	CEM2332T-G	23.30	322	91	230/460	14.1
15	3600	254TC	CEM2394T-G	23.78	239	91	230/460	17.5
	1800	254TC	CEM2333T-G	23.78	270	92.4	230/460	18.1
	1200	284TC	CEM4100T-G	27.76	369	91.7	230/460	21
20	3600	256TC	CEM4106T-G	23.78	261	91	230/460	23
	1800	256TC	CEM2334T-G	23.78	295	93	230/460	24
	1200	286TC	CEM4102T-G	27.76	393	91.7	230/460	27
25	3600	284TSC	CEM4107T-G	26.39	323	91.7	230/460	29
	1800	284TC	CEM4103T-G	27.76	400	93.6	230/460	30
	1200	324TC	CEM4111T-G	30.39	507	93	230/460	32
30	3600	286TSC	CEM4108T-G	26.39	336	91.7	230/460	34
	1800	286TC	CEM4104T-G	27.76	410	93.6	230/460	38
	1200	326TC	CEM4117T-G	30.28	604	93	230/460	39
40	3600	324TSC	CEM4109T-G	28.78	532	92.4	230/460	46
	1800	324TC	CEM4110T-G	30.28	596	94.1	230/460	48
50	3600	326TSC	CEM4114T-G	28.78	584	93	230/460	56
	1800	326TC	CEM4115T-G	30.28	648	94.5	230/460	58
60	3600	364TSC	CEM4310T-G	31.36	900	95	230/460	66.3
	1800	364TC	CEM4314T-G	33.48	907	95	230/460	68
75	3600	365TSC	CEM4313T-G	31.36	966	94.5	230/460	81.9
	1800	365TC	CEM4316T-G	33.48	956	95.4	230/460	85.9
100	1800	405TC	CEM4400T-G	38.20	1214	95.4	230/460	112

Shaded areas indicate cast iron construction.

Premium efficient Super-E® motors

- 230/460, 200 & 575 volt
- Three phase
- TEFC
- Foot mounted
- Internal AEGIS® bearing protection ring
- 1 thru 100 Hp
- NEMA 56 thru 405T
- Cast iron and rolled steel

NEMA Premium

Hp	RPM	NEMA frame	Cat. no.	"C" dim.	Aprx. wt. (lb)	FL eff.	Voltage	FL amps
1	3600	56	EM3545-G	12.23	32	77	230/460	1.4
	1800	143T	EM3546T-G	12.31	30	85.5	230/460	1.5
	1800	143T	EM3581T-G	12.54	55	85.5	230/460	1.5
	1200	145T	EM3556T-G	13.31	43	82.5	230/460	1.8
	1200	145T	EM3582T-G	12.54	56	82.5	230/460	1.7
1-1/2	3600	143T	EM3550T-G	12.29	36	84	230/460	1.9
	3600	143T	EM3583T-G	12.54	56	84	230/460	1.9
	1800	145T	EM3554T-G	13.31	42	86.5	230/460	2.2
	1800	145T	EM3584T-G	12.54	61	86.5	230/460	2.3
	1200	182T	EM3607T-G	16.54	76	87.5	230/460	2.4
	1200	182T	EM3667T-G	15.24	99	87.5	230/460	2.5
2	3600	145T	EM3555T-G	13.29	46	85.5	230/460	2.5
	3600	145T	EM3586T-G	12.54	62	85.5	230/460	2.5
	1800	145T	EM3558T-G	13.31	42	86.5	230/460	2.9
	1800	145T	EM3587T-G	12.54	62	86.5	230/460	2.9
	1200	184T	EM3614T-G	18.04	94	88.5	230/460	3.5
	1200	184T	EM3664T-G	15.24	123	88.5	230/460	3.15
3	3600	145T	EM3559T-G	14.17	53	86.5	230/460	3.6
	3600	182T	EM3610T-G	15.29	57	86.5	230/460	3.6
	3600	182T	EM3660T-G	15.24	58	86.5	230/460	3.8
	1800	182T	EM3611T-G	16.54	74	89.5	230/460	4.2
	1800	182T	EM3661T-G	15.24	105	89.5	230/460	4.1
	1200	213T	EM3704T-G	19.01	135	89.5	230/460	4.6
	1200	213T	EM3764T-G	18.45	211	89.5	230/460	4.5
5	3600	184T	EM3613T-G	16.54	76	88.5	230/460	5.9
	3600	184T	EM3663T-G	15.24	99	88.5	230/460	5.8
	1800	184T	EM3615T-G	18.04	92	89.5	230/460	6.7
	1800	184T	EM3665T-G	15.24	115	89.5	230/460	6.6
	1200	215T	EM3708T-G	19.76	154	89.5	230/460	7.3
	1200	215T	EM3768T-G	18.45	198	89.5	230/460	7.4
7-1/2	3600	213T	EM3709T-G	17.89	133	89.5	230/460	9
	3600	213T	EM3769T-G	18.45	169	89.5	230/460	9
	1800	213T	EM3710T-G	19.01	129	91.7	230/460	9.4
	1800	213T	EM3770T-G	18.45	193	91.7	230/460	9.5
	1200	254T	EM2276T-G	23.30	281	91	230/460	11
10	3600	215T	EM3711T-G	17.89	118	90.2	230/460	11.8
	3600	215T	EM3771T-G	18.45	164	90.2	230/460	11.8
	1800	215T	EM3714T-G	20.51	156	91.7	230/460	12
	1800	215T	EM3774T-G	18.45	232	91.7	230/460	12.2
	1200	256T	EM2332T-G	23.30	322	91	230/460	14.1
15	3600	254T	EM2394T-G	23.30	239	91	230/460	17.5
	1800	254T	EM2333T-G	23.30	270	92.4	230/460	18.1
	1200	284T	EM4100T-G	27.76	369	91.7	230/460	21
20	3600	256T	EM4106T-G	23.30	261	91	230/460	23
	1800	256T	EM2334T-G	23.30	295	93	230/460	24
	1200	286T	EM4102T-G	27.76	393	91.7	230/460	27

Shaded areas indicate cast iron construction.

Premium efficient Super-E® motors

Hp	RPM	NEMA frame	Cat. no.	"C" dim.	Aprx. wt. (lb)	FL eff.	Voltage	FL amps
25	3600	284TS	EM4107T-G	24.70	323	91.7	230/460	29
	1800	284T	EM4103T-G	27.76	400	93.6	230/460	30
	1200	324T	EM4111T-G	30.39	507	93	230/460	32
30	3600	286TS	EM4108T-G	24.70	336	91.7	230/460	34
	1800	286T	EM4104T-G	27.76	410	93.6	230/460	38
	1200	326T	EM4117T-G	30.28	604	93	230/460	39
40	3600	324TS	EM4109T-G	28.78	532	92.4	230/460	46
	1800	324T	EM4110T-G	30.28	596	94.1	230/460	48
	1200	364T	EM4308T-G	33.48	883	94.1	230/460	49.4
50	3600	326TS	EM4114T-G	28.78	584	93	230/460	56
	1800	326T	EM4115T-G	30.28	648	94.5	230/460	58
	1200	365T	EM4312T-G	33.48	910	94.1	230/460	61.7
60	3600	364TS	EM4310T-G	31.36	900	95	230/460	66.3
	1800	364T	EM4314T-G	33.48	907	95	230/460	68
75	3600	365TS	EM4313T-G	31.36	966	94.5	230/460	81.9
	1800	365T	EM4316T-G	33.48	956	95.4	230/460	85.9
100	1800	405T	EM4400T-G	38.20	1214	95.4	230/460	112

Shaded areas indicate cast iron construction.

Hp	RPM	NEMA frame	Cat. no.	"C" dim.	Aprx. wt. (lb)	FL eff.	Voltage	FL amps
Totally enclosed fan cooled, 200 volt								
5	1800	184T	EM3665T-8G	15.23	119	89.5	200	15.1
7 1/2	1800	213T	EM3770T-8G	18.45	170	91.7	200	21.4
10	1800	215T	EM3774T-8G	18.45	231	91.7	200	28
15	1800	254T	EM2333T-8G	23.30	255	92.4	200	42.4
Totally enclosed fan cooled, 575 volt								
1	1800	143T	EM3546T-5G	12.31	35	85.5	575	1.2
1 1/2	1800	145T	EM3554T-5G	13.31	42	86.5	575	1.8
2	1800	145T	EM3558T-5G	13.31	46	86.5	575	2.3
3	1800	182T	EM3611T-5G	16.54	76	89.5	575	3.3
5	1800	184T	EM3615T-5G	18.04	84	89.5	575	5.3
7 1/2	1800	213T	EM3710T-5G	19.01	126	91.7	575	7.6
10	1800	215T	EM3714T-5G	20.51	165	91.7	575	9.6
15	1800	254T	EM2333T-5G	23.30	250	92.4	575	14.5
20	1800	256T	EM2334T-5G	23.30	293	93	575	19.2
25	1800	284T	EM4103T-5G	27.76	364	93.6	575	23
30	1800	286T	EM4104T-5G	27.76	423	93.6	575	29
40	1800	324T	EM4110T-5G	30.28	576	94.1	575	39
50	1800	326T	EM4115T-5G	30.28	644	94.5	575	46

Shaded areas indicate cast iron construction.

Premium efficient Super-E® motors

- 230/460
- Three phase
- ODP
- Foot mounted
- Internal AEGIS bearing protection ring
- 1 thru 100 Hp
- NEMA 56 thru 405T

Hp	RPM	NEMA frame	Cat. no.	"C" dim.	Aprx. wt. (lb)	FL eff.	Voltage	FL amps
1	3600	56C	CEM31115-G	11.75	27	77	230/460	1.6
	1800	143TC	CEM3116T-G	11.12	34	85.5	230/460	1.5
	1200	145TC	CEM3156T-G	11.62	40	82.5	230/460	1.8
1-1/2	3600	143TC	CEM3120T-G	11.12	34	84	230/460	2
	1800	145TC	CEM3154T-G	11.62	38	86.5	230/460	2.2
	1200	182TC	CEM3207T-G	15.00	67	86.5	230/460	2.5
2	3600	143TC	CEM3155T-G	11.62	41	85.5	230/460	2.5
	1800	145TC	CEM3157T-G	12.12	41	86.5	230/460	2.9
	1200	184TC	CEM3215T-G	16.50	79	87.5	230/460	3.4
3	3600	145TC	CEM3158T-G	13.00	46	85.5	230/460	3.8
	1800	182TC	CEM3211T-G	15.00	72	89.5	230/460	4.2
	1200	213TC	CEM3305T-G	16.32	110	88.5	230/460	4.5
5	3600	182TC	CEM3212T-G	13.62	63	86.5	230/460	6
	1800	184TC	CEM3218T-G	16.50	84	89.5	230/460	6.6
	1200	215TC	CEM3309T-G	17.45	141	89.5	230/460	7.4
7-1/2	3600	184TC	CEM3219T-G	15.00	75	88.5	230/460	8.6
	1800	213TC	CEM3311T-G	16.32	115	91	230/460	9.7
	1200	254TC	CEM2506T-G	23.19	243	90.2	230/460	11
10	3600	213TC	CEM3312T-G	16.32	113	89.5	230/460	12
	1800	215TC	CEM3313T-G	17.45	127	91.7	230/460	12.5
	1200	256TC	CEM2511T-G	23.19	255	91.7	230/460	14.3
15	3600	215TC	CEM3314T-G	16.32	126	90.2	230/460	17.5
	1800	254TC	CEM2513T-G	21.69	210	93	230/460	17.7
	1200	284TC	CEM2524T-G	23.81	280	91.7	230/460	20.5
20	3600	254TC	CEM2514T-G	21.69	195	91	230/460	23.5
	1800	256TC	CEM2515T-G	21.69	227	93	230/460	23.5
	1200	286TC	CEM2528T-G	23.81	299	92.4	230/460	27
25	3600	256TC	CEM2516T-G	21.69	212	91.7	230/460	28
	1800	284TC	CEM2531T-G	25.06	314	93.6	230/460	30
	1200	324TC	CEM2532T-G	27.69	384	93	230/460	34
30	3600	284TSC	CEM2534T-G	22.44	310	91.7	230/460	35
	1800	286TC	CEM2535T-G	25.06	340	94.1	230/460	35
	1200	326TC	CEM2536T-G	28.69	457	93.6	230/460	38
40	3600	286TSC	CEM2538T-G	22.44	328	92.4	230/460	46
	1800	324TC	CEM2539T-G	27.19	392	94.1	230/460	49
50	3600	324TSC	CEM2542T-G	25.69	392	93	230/460	56
	1800	326TC	CEM2543T-G	27.69	473	94.5	230/460	57
60	3600	326TSC	CEM2546T-G	30.69	616	95	230/460	68
	1800	364TC	CEM2547T-G	30.69	616	95	230/460	68
75	3600	364TSC	CEM2549T-G	33.72	750	95	230/460	87
	1800	365TC	CEM2551T-G	33.72	750	95	230/460	87
100	3600	365TSC	CEM2550T-4G	36.97	898	95.4	460	115
	1800	404TC	CEM2555T-4G	36.97	898	95.4	460	115

Premium efficient Super-E® motors

- 230/460 volt
- Three phase
- ODP
- Foot mounted
- Internal AEGIS® bearing protection ring
- 1 thru 100 Hp
- NEMA 56 thru 404T

Hp	RPM	NEMA frame	Cat. no.	"C" dim.	Aprx. wt. (lb)	FL eff.	Voltage	FL amps
1	3600	56	EM3115-G	11.06	28	80	208-230/460	1.5
	1800	143T	EM3116T-G	11.12	34	85.5	208-230/460	1.5
	1200	145T	EM3156T-G	11.62	40	82.5	208-230/460	1.8
1-1/2	3600	143T	EM3120T-G	11.12	34	84	208-230/460	2
	1800	145T	EM3154T-G	11.62	38	86.5	230/460	2.2
	1200	182T	EM3207T-G	15.00	67	86.5	208-230/460	2.5
2	3600	143T	EM3155T-G	11.62	41	85.5	208-230/460	2.5
	1800	145T	EM3157T-G	12.12	41	86.5	230/460	2.9
	1200	184T	EM3215T-G	16.50	79	87.5	208-230/460	3.4
3	3600	145T	EM3158T-G	13.00	46	85.5	230/460	3.8
	1800	182T	EM3211T-G	15.00	72	89.5	230/460	4.2
	1200	213T	EM3305T-G	16.32	110	88.5	208-230/460	4.5
5	3600	182T	EM3212T-G	13.62	60	86.5	208-230/460	6
	1800	184T	EM3218T-G	16.50	84	89.5	208-230/460	6.6
	1200	215T	EM3309T-G	17.45	141	89.5	208-230/460	7.4
7-1/2	3600	184T	EM3219T-G	15.00	75	88.5	208-230/460	8.6
	1800	213T	EM3311T-G	16.32	115	91	208-230/460	9.7
	1200	254T	EM2506T-G	23.19	243	90.2	230/460	11
10	3600	213T	EM3312T-G	16.32	110	89.5	208-230/460	12
	1800	215T	EM3313T-G	17.45	127	91.7	230/460	12.5
	1200	256T	EM2511T-G	23.19	255	91.7	230/460	14.3
15	3600	215T	EM3314T-G	16.32	123	90.2	230/460	17.5
	1800	254T	EM2513T-G	21.69	210	93	230/460	17.7
	1200	284T	EM2524T-G	23.81	281	91.7	230/460	20.5
20	3600	254T	EM2514T-G	21.69	195	91	230/460	23.5
	1800	256T	EM2515T-G	21.69	227	93	230/460	23.5
	1200	286T	EM2528T-G	23.81	299	92.4	230/460	27
25	3600	256T	EM2516T-G	21.69	212	91.7	230/460	28
	1800	284T	EM2531T-G	25.06	314	93.6	230/460	30
	1200	324T	EM2532T-G	27.69	384	93	208-230/460	34
30	3600	284TS	EM2534T-G	22.44	311	91.7	208-230/460	35
	1800	286T	EM2535T-G	25.06	337	94.1	230/460	35
	1200	326T	EM2536T-G	28.69	457	93.6	230/460	38
40	3600	286TS	EM2538T-G	22.44	328	92.4	208-230/460	46
	1800	324T	EM2539T-G	27.19	389	94.1	230/460	49
	1200	364T	EM2540T-G	30.69	606	94.1	230/460	51
50	3600	324TS	EM2542T-G	25.69	392	93	208-230/460	56
	1800	326T	EM2543T-G	27.69	473	94.5	230/460	57
60	1800	364T	EM2547T-G	30.69	616	95	230/460	68
75	1800	365T	EM2551T-G	33.72	750	95	230/460	87
100	1800	404T	EM2555T-4G	36.97	898	95.4	460	115

Premium efficient Super-E® motors

- 200 & 575 volt
- Three phase
- ODP
- Foot mounted
- Internal AEGIS bearing protection ring
- 1 thru 50 Hp
- NEMA 143T thru 326T

Hp	RPM	NEMA frame	Cat. no.	"C" dim.	Aprx. wt. (lb)	FL eff.	Voltage	FL amps
Open drip proof, 200 volt								
1	1800	143T	EM3116T-8G	11.12	34	85.5	200	3.5
1 1/2	1800	145T	EM3154T-8G	11.62	37	86.5	200	5.1
2	1800	145T	EM3157T-8G	12.12	43	86.5	200	6.5
3	1800	182T	EM3211T-8G	15.00	74	89.5	200	9.7
5	1800	184T	EM3218T-8G	16.50	92	89.5	200	15.3
7 1/2	1800	213T	EM3311T-8G	16.32	120	91	200	22.2
10	1800	215T	EM3313T-8G	17.45	132	91.7	200	29.5
15	1800	254T	EM2513T-8G	21.69	234	93	200	40.7
20	1800	256T	EM2515T-8G	21.69	250	93	200	54.3
25	1800	284T	EM2531T-8G	25.06	327	93.6	200	70
30	1800	286T	EM2535T-8G	25.06	375	94.1	200	81
40	1800	324T	EM2539T-8G	27.19	378	94.1	200	109
Open drip proof, 575 volt								
1	1800	143T	EM3116T-5G	11.12	34	85.5	575	1.2
1 1/2	1800	145T	EM3154T-5G	11.62	37	86.5	575	1.8
2	1800	145T	EM3157T-5G	12.12	43	86.5	575	2.3
3	1800	182T	EM3211T-5G	15.00	74	89.5	575	3.4
5	1800	184T	EM3218T-5G	16.50	92	89.5	575	5.3
7 1/2	1800	213T	EM3311T-5G	16.32	120	91	575	7.6
10	1800	215T	EM3313T-5G	17.45	132	91.7	575	10
15	1800	254T	EM2513T-5G	21.69	234	93	575	14.1
20	1800	256T	EM2515T-5G	21.69	250	93	575	18.9
25	1800	284T	EM2531T-5G	25.06	327	93.6	575	24.5
30	1800	286T	EM2535T-5G	25.06	375	94.1	575	28
40	1800	324T	EM2539T-5G	27.19	378	94.1	575	40

ABB Motors and Mechanical Inc.
5711 R.S. Boreham, Jr. Street
Fort Smith, AR 72901
Ph: 1.479.646.4711

new.abb.com/motors-generators

We reserve the right to make technical changes or modify the contents of this document without prior notice. With regard to purchase orders, the agreed particulars shall prevail. ABB does not accept any responsibility whatsoever for potential errors or possible lack of information in this document.

We reserve all rights in this document and in the subject matter and illustrations contained therein. Any reproduction, disclosure to third parties or utilization of its contents – in whole or in parts – is forbidden without prior written consent of ABB.
Copyright© 2017 ABB
All rights reserved

9AKK107707 09.2020 Litho 2,500

Low voltage AC drives

ABB industry specific drives
ACQ810
0.37 to 500 kW
Catalog

Power and productivity
for a better world™

The intelligent choice for water and wastewater applications

Real time clock
Setup real time related functions for system control based on time-of-day variable demand.

Embedded modbus
Utilize the most common communication protocol in the water industry right out of the box.

Side-by-side mounting
A compact, narrow module design allows for cabinet mounting including DIN rail mounts on smaller frame sizes.

Remote monitoring
With a built-in web server, SREA-01 enables worldwide access to drives.

Removable memory unit
Download and upload parameters to a number of drives on startups, installations, and trouble-shooting.

Whether your system requires redundancy in multi-pump applications or built-in macros designed for the water and wastewater markets, the ACQ810 will surpass your requirements.

Startup and maintenance tools
DriveStudio and the DriveSPC programming tool for startup, configuration, daily use and process tuning of the drive to application requirements.

Flexible product configurations
Drives are built to order with a wide range of options such as EMC filters.

Communication with all major automation networks
Fieldbus adapters enable connectivity with all major automation networks.

Extended connectivity
In addition to the standard interfaces the drive has a built-in slot for additional input/output extension modules.

VULCAN

Project _____

AIA # _____ SIS # _____

Item # _____ Quantity _____ C.S.I. Section 114000

KGLT SERIES

Gas Floor Mounted Tilting ⅔ Jacketed Kettles

Model K40GLT

GAS-FIRED c UL us LISTED

CLASSIFIED UL EPH ANSI/NSF Standard #4

SPECIFIER STATEMENT

Gas self-contained, stainless steel fully insulated, ⅔ jacketed floor mounted tilting steam kettle. Ellipsoidal bottom kettle liner formed and fully welded type 316 and type 304 stainless steel exterior with (¼ x ⅝ inch 20 gallons) (⅜ x 1 inch 40 gallons and greater) heavy bar rim, embossed gallon/liter markings. 50 psi (3.4 kg/cm²) steam jacket rating. Stainless steel splash proof enclosure for controls, self-locking tilt mechanism and faucet bracket. Controls include a power switch, power "on" light, solid state temperature control with graduated warm, simmer and boil setting, vacuum/pressure gauge, pressure relief valve, low water light and low water shut-off. Gas control with combination gas valve with internal regulator, flame failure and gas type is field convertible. High efficiency Power Burner Heating System (64% to 68% efficiency). Kettle tilts forward 95° to completely empty. Tubular stainless steel legs with removable section and flanged feet. Steam jacket permanently filled with treated, distilled water. 110-120V, 50-60 Hz, 5A, with 6 foot cord and three-prong grounding plug.

UL Certified to ANSI Z83.11/CSA 1.8. Certified to NSF Standard #4. Meets ASME.

SPAN GAS TECHNOLOGY ENABLES FIELD ADJUSTABLE TO PROPANE GAS AND ALTITUDE.

MODELS

- ❑ **K20GLT** 100,000 BTU/hr., 20 gallon true working capacity
- ❑ **K40GLT** 100,000 BTU/hr., 40 gallon true working capacity
- ❑ **K60GLT** 100,000 BTU/hr., 60 gallon true working capacity

STANDARD FEATURES

- Gas self-contained, stainless steel, ⅔ jacketed floor mounted tilting steam kettle
- Ellipsoidal bottom kettle liner formed and fully welded standard type 316 and type 304 stainless steel exterior
- Heavy bar rim (¼ x ⅝ inch 20 gallons) (⅜ x 1 inch 40 gallons and greater)
- Embossed gallon/liter markings
- 50 psi (3.4 kg/cm²) steam jacket rating
- Stainless steel enclosure for "water resistant" controls, self-locking tilt mechanism and faucet bracket
- Controls include a power switch, power "on" light, solid state temperature control, vacuum/pressure gauge, pressure relief valve, low water light and lower water shut-off
- Elevation from sea level to 8,999 feet standard
- Kettle tilts forward 95° to completely empty
- Tubular stainless steel legs with flanged feet
- One year limited parts and labor warranty

OPTIONS

- ❑ Two inch bolt on compression tangent draw-off valve with perforated strainer
- ❑ Two inch bolt on plug tangent draw-off valve with perforated strainer
- ❑ Three inch bolt on compression tangent draw-off valve with perforated strainer increases height of kettle
- ❑ Security facility package:
  - a. Security type fasteners with tack welds
  - b. Controls protected with lockable cover
- ❑ Stainless steel protector for the draw-off valve with chain
- ❑ Second year extended limited parts and labor warranty

ACCESSORIES (PACKAGED AND SOLD SEPARATELY)

- ❑ Spring assist hinged stainless steel cover with condensate ring and drop down lift handle
- ❑ Pouring lip strainer
- ❑ Clean-up kit, includes draw-off brush, clean-up brush and paddle scrapper with 40" handle
- ❑ Stainless steel 48" whip
- ❑ Non-perforated strainer to prevent food from entering the draw-off tube during cooking
- ❑ (12") (18" double jointed) single pantry lead-free faucet
- ❑ (12") (18" double jointed) double pantry lead-free faucet
- ❑ Double pantry washdown hose with 16" add-on lead-free faucet with vacuum breaker
- ❑ Double pantry washdown hose with lead-free vacuum breaker
- ❑ Double pantry pot filler with lead-free vacuum breaker

KGLT SERIES – Gas Floor Mounted Tilting ⅔ Jacketed Kettles

Approved by_____ Date_____ Approved by_____ Date_____

KGLT SERIES

Gas Floor Mounted Tilting ⅔ Jacketed Kettles

SERVICE CONNECTIONS

Electric Connection: 110-120V, 50-60 Hz, 5A, with 6 foot cord and three-prong grounding plug.

Gas Connection: ¾" NPT supply line required.

Embossed Gallon/Liter Markings		
20-Gallon	**40-Gallon**	**60-Gallon**
20 - 76	40 - 151	60 - 227
18 - 68	35 - 132	55 - 209
16 - 61	30 - 114	50 - 189
14 - 53	25 - 95	45 - 171
12 - 46	20 - 76	40 - 151
10 - 38	15 - 57	35 - 132
		25 - 95
		20 - 76

TRUE WORKING CAPACITIES (IN 4 OZ. SERVINGS)

80 quarts/20 gallons/76 liters/640 servings
120 quarts/40 gallons/152 liters/1,280 servings
160 quarts/60 gallons/228 liters/1,920 servings

NOTES

- Dimensions which locate the above connections have a tolerance of + or -3" (+ or -75mm). Normal dimensions are in inches. Dimensions in [ ] are in millimeters.
- Installation of backflow preventers, vacuum breakers and other specific code requirements is the responsibility of the owner and installer. It is the responsibility of the owner and installer to comply with local codes.
- Do not use plastic drains.
- Do not connect this unit to a ground-fault circuit-interrupter (GFCI) 125-volt, single-phase, 15- and 20-ampere receptacle. Electronic burner ignition systems are prone to nuisance tripping and possible ignition failure.
- This appliance is manufactured for commercial installation only and is not intended for home use.

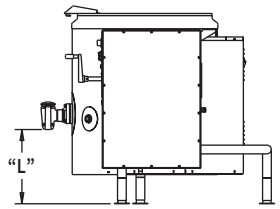

SHOWN WITH OPTIONAL DRAW-OFF VALVE
(2" PLUG VALVE)

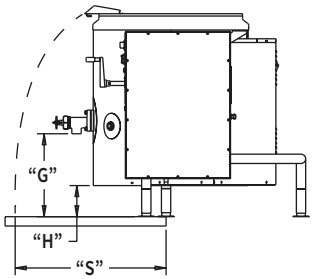

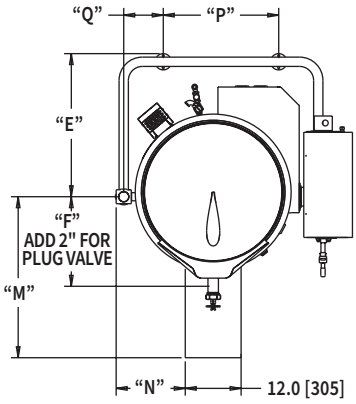

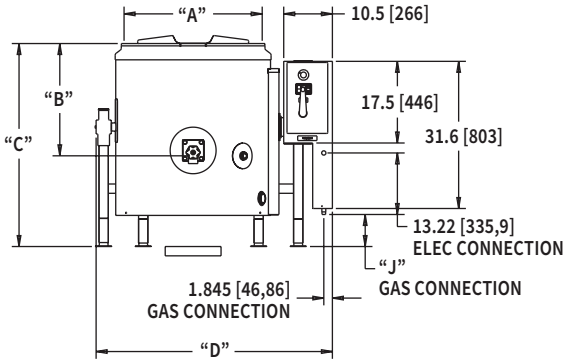

SHOWN WITH OPTIONAL DRAW-OFF VALVE
(2" COMPRESSION VALVE)

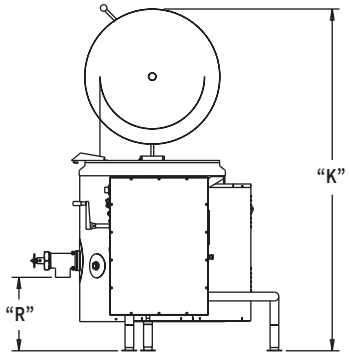

SHOWN WITH OPTIONAL DRAW-OFF VALVE AND LID
(3" COMPRESSION VALVE)

CAD and/or Revit Files Available

Model	True Working Capacity	A	B	C	D	E	F	G	H	J	K	L	M	N	P	Q	R	S
K20GLT	20 gallons	21.8	15.3	38.3	42.7	26.8	16.0	21.4	8.1	6.9	67.1	20.7	28.0	10.8	16.7	8.5	20.4	25.0
	76 liters	554	389	973	1085	681	406	544	206	175	1704	526	711	274	424	216	518	635
K40GLT	40 gallons	25.8	21.2	39.9	46.8	28.8	18.1	17.1	6.6	6.9	71.0	16.3	31.3	12.8	20.8	8.5	16.1	29.4
	152 liters	655	538	1013	1189	732	460	434	168	175	1803	414	795	325	528	216	408	747
K60GLT	60 gallons	29.7	24.1	43.6	50.8	30.8	19.3	17.8	6.7	6.9	78.3	17.0	34.6	14.9	24.8	8.5	16.8	32.7
	227 liters	754	612	1107	1290	782	490	452	170	175	1989	432	879	378	630	216	427	831

As continued product improvement is a policy of Vulcan, specifications are subject to change without notice.

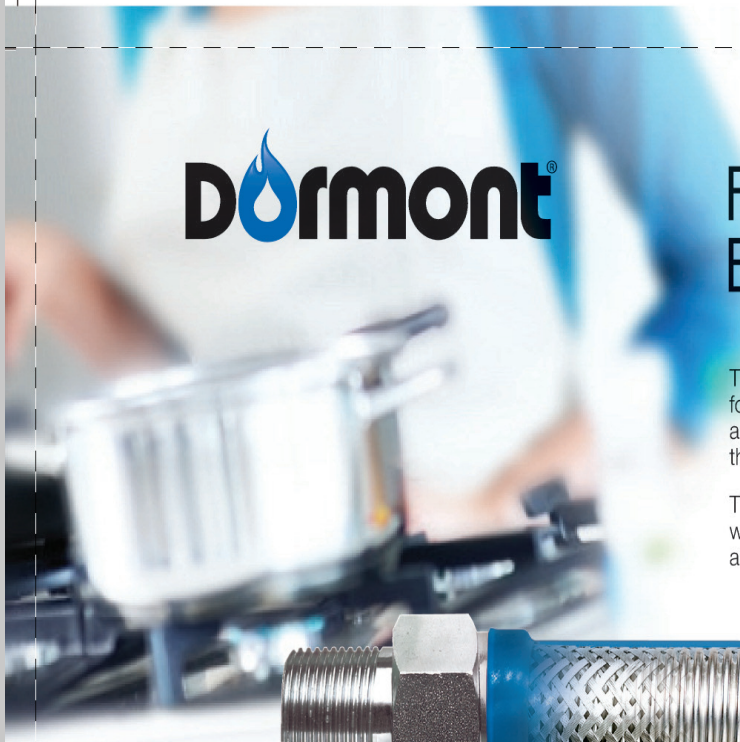

Foodservice Moveable Equipment Installation Products

The Dormont Blue Hose™ is the heart of the Safety System, specifically engineered for caster-mounted commercial cooking equipment. The Blue Hose includes an antimicrobial protective PVC coating, and our Stress Guard® technology that makes the hose easier to install and dramatically reduces stress on the hose ends.

The fuel gas codes require the use of an ANSI Z21.69/CSA 6.16 moveable gas connector with all appliances that may or may not utilize casters and, under normal use, are moved on a regular basis for service, positioning or area cleanliness.

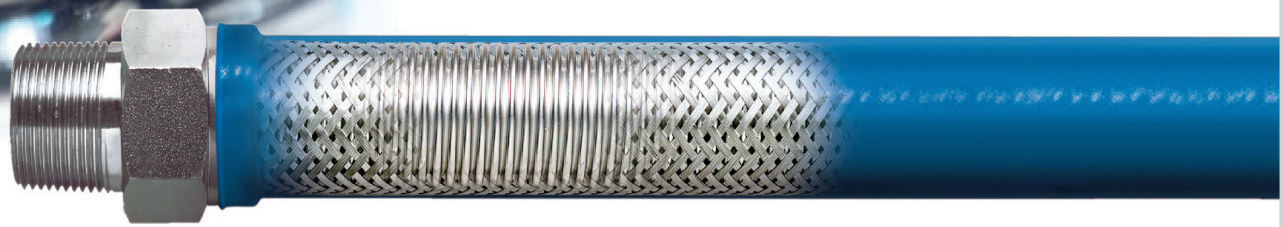

STRESS GUARD TECHNOLOGY

Rotation technology reduces stress on both ends of the hose

Stainless Steel Construction
Heavy-duty, flexible, corrugated 304 stainless steel tubing

Stainless Steel Braid
Tight-weave braid prevents corrugations from stretching as equipment is moved

Antimicrobial PVC Coating
Inhibits growth of bacteria, mold and mildew on the gas connector

The Dormont Safety System™ is the first and only complete gas equipment connection system specifically engineered for the commercial kitchen. It is a complete system of connection products designed with the safety of your kitchen, the food you serve, your employees, and your business in mind.

The Safety System includes the famous Dormont Blue Hose and our exclusive safety-based fittings - the SnapFast quick-disconnect, the Safety Quik quick-disconnect valve, and the Swivel MAX. Safe, unique, and affordable, the Dormont Safety System provides peace of mind for the gas connections in your commercial kitchen.

Safety Quik

- Prevents user from turning on gas while appliance is disconnected
- Thermal shut-off when internal temperature exceeds 350°F (177°C)

SnapFast

- One-handed quick-disconnect fitting
- Thermal shut-off when internal temperature exceeds 350°F (177°C)

SwivelMAX

- Reduces stress on connector
- Increases kitchen aisle space by allowing connector to be positioned closer to the wall

Restraining Cable

- Prevents transmission of strain to connector
- Provided 1' shorter than the gas connector

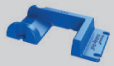

Safety-Set
Always on the mark

- Ensures cooking equipment is always positioned in design-specified location
- Fast installation with choice of adhesive foam tape or thumbscrews

A Watts Water Technologies Company USA: 6015 Enterprise Drive, Export, PA 15632 • 1-800-DORMONT • Dormont.com

Dormont® Moveable Commercial Equipment Kits

KIT SOLUTIONS	50 = ½" ID 75 = ¾" ID 100 = 1" ID 125 = 1-¼" ID PART NUMBER	BTU/hr Minimum Flow Capacity*	THE BLUE HOSE™	SnapFast® QUICK-DISCONNECT	Swivel MAX® 1st SWIVEL	Swivel MAX® 2nd SWIVEL	Safety Quik® VALVE	RESTRAINING CABLE
Standard Kit (KIT)[1] The Dormont Blue Hose™ SnapFast Quick-Disconnect Restraining Cable	1650KIT36	77K	√	√				√
	1650KIT48	68K	√	√				√
	1650KIT60	60K	√	√				√
	1675KIT36	218K	√	√				√
	1675KIT48	180K	√	√				√
	1675KIT60	158K	√	√				√
	16100KIT36	379K	√	√				√
	16100KIT48	334K	√	√				√
	16100KIT60	294K	√	√				√
Single Swivel MAX Kit (KITS)[2] The Dormont Blue Hose™ SnapFast Quick-Disconnect One Swivel MAX Swivel Restraining Cable	1650KITS36	72K	√	√	√			√
	1650KITS48	63K	√	√	√			√
	1650KITS60	56K	√	√	√			√
	1675KITS36	203K	√	√	√			√
	1675KITS48	167K	√	√	√			√
	1675KITS60	147K	√	√	√			√
	16100KITS36	353K	√	√	√			√
	16100KITS48	310K	√	√	√			√
	16100KITS60	274K	√	√	√			√
Double Swivel MAX Kit (KIT2S)[3] The Dormont Blue Hose™ SnapFast Quick-Disconnect Two Swivel MAX Swivels Restraining Cable	1650KIT2S36	69K	√	√	√	√		√
	1650KIT2S48	60K	√	√	√	√		√
	1650KIT2S60	54K	√	√	√	√		√
	1675KIT2S36	193K	√	√	√	√		√
	1675KIT2S48	160K	√	√	√	√		√
	1675KIT2S60	140K	√	√	√	√		√
	16100KIT2S36	336K	√	√	√	√		√
	16100KIT2S48	295K	√	√	√	√		√
	16100KIT2S60	261K	√	√	√	√		√
Safety Quik Kit (KITCF)[4] The Dormont Blue Hose™ Safety Quik Quick-Disconnect Restraining Cable	1650KITCF36	77K	√				√	√
	1650KITCF48	68K	√				√	√
	1650KITCF60	60K	√				√	√
	1675KITCF36	218K	√				√	√
	1675KITCF48	180K	√				√	√
	1675KITCF60	158K	√				√	√
	16100KITCF36	379K	√				√	√
	16100KITCF48	334K	√				√	√
	16100KITCF60	294K	√				√	√
Safety Quik Single Swivel MAX Kit (KitCFS)[5]	1650KITCFS36	72K	√		√		√	√
	1650KITCFS48	63K	√		√		√	√
	1650KITCFS60	56K	√		√		√	√
	1675KITCFS36	203K	√		√		√	√
	1675KITCFS48	161K	√		√		√	√
	1675KITCFS60	147K	√		√		√	√
	16100KITCFS36	353K	√		√		√	√
	16100KITCFS48	310K	√		√		√	√
	16100KITCFS60	274K	√		√		√	√

[1] Includes Full Port Gas Valve and (2) 90° Street Elbows
[2] Includes Full Port Gas Valve and (1) 90° Street Elbow
[3] Includes Full Port Gas Valve
[4] Includes (2) 90° Street Elbows
[5] Includes (1) 90° Street Elbow

Indicates most commonly stocked item

*BTU/hr Minimum Flow Capacity (0.64 Sp.Gr., 1000 BTU/ft^3 Natural Gas at 0.5" wc pressure drop)

ADDITIONAL CONFIGURATIONS ARE AVAILABLE IN OUR CATALOG.

Add PS to the end of any part number to include the Safety-Set® wheel placement system

GAS CONNECTOR LIFETIME WARRANTY

We guarantee our commercial gas connectors for the life of the original appliance to which it is connected.

S-D-BUYGUIDE 1538

© Dormont 2015

VULCAN

Project _____

AIA # _____ SIS # _____

Item # _____ Quantity _____ C.S.I. Section 114000

VG SERIES

Modular Gas Tilting Braising Pan

Model VG30
Shown with casters and washdown hose

ANSI/NSF Standard #4

SPECIFIER STATEMENT

Modular gas tilting braising pan. 36"/46" wide open base. Stainless steel front, sides and 12" legs with adjustable flanged feet. Stainless steel back. Front hinged polished stainless steel pan body with coved interior corners and embossed gallon markings. Pan depth is 9.75". Stainless steel cooking surface bonded to steel plate. Full width 4" return flange with formed pouring lip and removable strainer. Stainless steel spring assist cover with wrap around handle and condensate lip. Faucet mounting bracket (non-enclosed) field reversible "L" bracket either side. Drop away food receiving pan support mounts under pouring lip. Manually operated pan tilting mechanism with removable handle. Pan can be fully tilted to empty completely with approximately 30 crank revolutions. One 30,000 BTU/hr. burner for each 12" pan width. Burners shut off when pan is tilted 5°. Electronic ignition system for automatic burner light. Solid state temperature controls. Water tight controls and enclosures. Requires a 120/60/1 electrical power supply, 9.0 amps total draw. ¾" rear gas connection and internal gas combination valve with integral regulator.

Exterior Dimensions:
_____"w x 35½"d x 40½"h on 12" legs.

CSA design certified. Classified by UL to NSF Std. #4.

SPECIFY TYPE OF GAS WHEN ORDERING
SPECIFY ALTITUDE WHEN ABOVE 2,000 FT.

MODELS

- ❑ **VG30** 36" wide open base
- ❑ **VG40** 46" wide open base

STANDARD FEATURES

- Stainless steel front, back, sides and 12" legs with adjustable flanged feet
- Front hinged polished stainless steel pan body with coved interior corners and embossed gallon markings; stainless steel cooking surface bonded to steel plate; full width 4" return flange with formed pouring lip and removable strainer
- Stainless steel spring assist cover with wrap around cool to the touch handle and condensate lip
- Lid stops in place for vented cooking
- Faucet mounting bracket (non-enclosed) field reversible "L" bracket either side
- Drop away food receiving pan support mounts under pouring lip
  Note: DOV3 only an option for 30-gallon unit
- Manually operated anti-jam pan tilting mechanism with removable handle; pan can be fully tilted to empty completely with approximately 30 crank revolutions
- One 30,000 BTU/hr. burner for each 12" pan width; burners shut off when pan is tilted 5°; electronic ignition system for automatic burner lighting
- Solid state temperature controls, adjustable from 50°F to 425°F
- Water tight controls and enclosures
- Requires a 120/60/1 electrical power supply, 9.0 amps
- ¾" rear gas connection
- One year limited parts and labor warranty
- Combination gas valve with built-in regulator

OPTIONS

- ❑ Motor driven pan lift with removable manual crank handle
- ❑ Two inch draw-off valve – left front straight with strainer (BPDOV-1) pan support will be removed on VG30
- ❑ Two inch draw-off valve – left front 90° left with strainer (BPDOV-2) pan support will be removed on VG30
- ❑ Two inch draw-off valve – left side 90° front with strainer (BPDOV-3)
- ❑ Standard security package includes:
  - Security screws and tackwelds
    - Includes securing crank handle, pan strainer and non-door type panels
  - Controls protected by lockable cover
  - Perforated flue cover
- ❑ Second year extended limited parts and labor warranty

ACCESSORIES (PACKAGED AND SOLD SEPARATELY)

- ❑ Set of four casters, (two locking)
- ❑ Faucet bracket assembly (adds 3" to width) enclosed
- ❑ (12") (18") double jointed single pantry faucet
- ❑ (12") (18") double jointed double pantry faucet
- ❑ Double pantry washdown hose with 16" add-on faucet with backflow preventer
- ❑ Double pantry washdown hose with backflow preventer
- ❑ Double pantry pot filler and backflow preventer
- ❑ Steaming pan insert rack to hold 12" x 20" pans (Qty. ____)
- ❑ 12" x 20" x 4" stainless steel drain waste pan with clear plastic hose
- ❑ Catch can with bail handle and drain hose for draw-off valve

VG SERIES – Modular Gas Tilting Braising Pan

Approved by_____ Date_____ Approved by_____ Date_____

VG SERIES
Modular Gas Tilting Braising Pan

SERVICE CONNECTIONS

GAS INPUT: ¾" N.P.T., Nat. 7"-10.5" W.C.; Propane, 11"-13" W.C. See capacity schedule.

ELECTRICAL CONNECTION: Control circuit ⅞" dia. 120 volt, 1 phase, 15 amps, power cord.

IMPORTANT

1. A pressure regulator sized for this unit is included. Natural gas 7" W.C., propane gas 11" W.C. supply pressure.
2. Gas line connecting to appliance must be ¾" or larger. If flexible hose with quick connects are used the hose and quick connects BTU flow rate must be a minimum of 120% of the appliance data plate BTU rate.
3. An adequate ventilation system is required for commercial cooking equipment. Information may be obtained by visiting the National Fire Protection Association website at https://www.nfpa.org/. Refer to NFPA No. 96.
4. These units are manufactured for installation in accordance with ANSZ223.1A (latest edition), National Fuel Gas Code. Information may be obtained from The American Gas Association website at https://www.aga.org/.
5. Clearances:

	Combustible	Non-combustible
Rear	6	0
Sides	2	0

6. This appliance is manufactured for commercial installation only and is not intended for home use.

Model	Cooking Surface Area	Capacity	4 oz. Portions
VG30	29" x 23"	30 gal./114 liters	960
VG40	39" x 23"	40 gal./152 liters	1280

INSTALLATION MANUAL

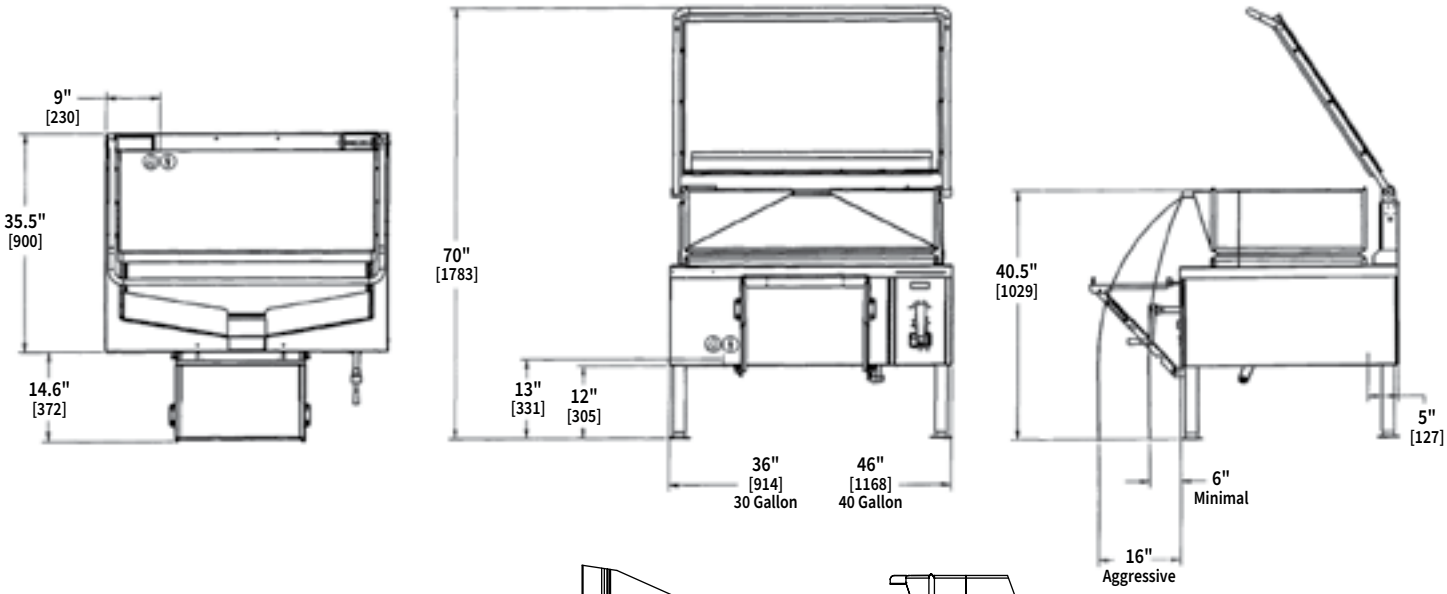

Model	BTU/Hr. Input
VG30	90,000
VG40	120,000

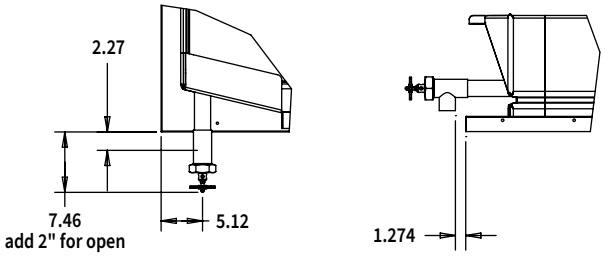

2" Draw-off valve – left front straight (BPDOV-1)

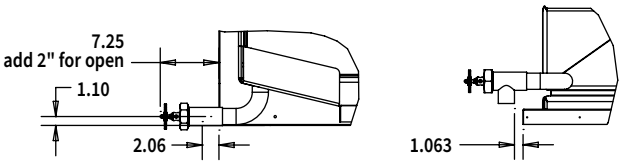

2" Draw-off valve – left front 90° left (BPDOV-2)

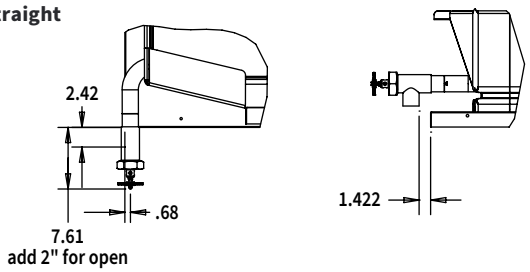

2" Draw-off valve – left side 90° front (BPDOV-3)

CAD and/or Revit Files Available

As continued product improvement is a policy of Vulcan, specifications are subject to change without notice.

VULCAN

Project _____

AIA # _____ SIS # _____

Item # _____ Quantity _____ C.S.I. Section 114000

KGLT SERIES

Gas Floor Mounted Tilting ⅔ Jacketed Kettles

Model K40GLT

GAS-FIRED c UL us LISTED

CLASSIFIED UL EPH

ANSI/NSF Standard #4

SPECIFIER STATEMENT

Gas self-contained, stainless steel fully insulated, ⅔ jacketed floor mounted tilting steam kettle. Ellipsoidal bottom kettle liner formed and fully welded type 316 and type 304 stainless steel exterior with (¼ x ⅝ inch 20 gallons) (⅜ x 1 inch 40 gallons and greater) heavy bar rim, embossed gallon/liter markings. 50 psi (3.4 kg/cm²) steam jacket rating. Stainless steel splash proof enclosure for controls, self-locking tilt mechanism and faucet bracket. Controls include a power switch, power "on" light, solid state temperature control with graduated warm, simmer and boil setting, vacuum/pressure gauge, pressure relief valve, low water light and low water shut-off. Gas control with combination gas valve with internal regulator, flame failure and gas type is field convertible. High efficiency Power Burner Heating System (64% to 68% efficiency). Kettle tilts forward 95° to completely empty. Tubular stainless steel legs with removable section and flanged feet. Steam jacket permanently filled with treated, distilled water. 110-120V, 50-60 Hz, 5A, with 6 foot cord and three-prong grounding plug.

UL Certified to ANSI Z83.11/CSA 1.8. Certified to NSF Standard #4. Meets ASME.

SPAN GAS TECHNOLOGY ENABLES FIELD ADJUSTABLE TO PROPANE GAS AND ALTITUDE.

MODELS

- ❑ **K20GLT** 100,000 BTU/hr., 20 gallon true working capacity
- ❑ **K40GLT** 100,000 BTU/hr., 40 gallon true working capacity
- ❑ **K60GLT** 100,000 BTU/hr., 60 gallon true working capacity

STANDARD FEATURES

- Gas self-contained, stainless steel, ⅔ jacketed floor mounted tilting steam kettle
- Ellipsoidal bottom kettle liner formed and fully welded standard type 316 and type 304 stainless steel exterior
- Heavy bar rim (¼ x ⅝ inch 20 gallons) (⅜ x 1 inch 40 gallons and greater)
- Embossed gallon/liter markings
- 50 psi (3.4 kg/cm²) steam jacket rating
- Stainless steel enclosure for "water resistant" controls, self-locking tilt mechanism and faucet bracket
- Controls include a power switch, power "on" light, solid state temperature control, vacuum/pressure gauge, pressure relief valve, low water light and lower water shut-off
- Elevation from sea level to 8,999 feet standard
- Kettle tilts forward 95° to completely empty
- Tubular stainless steel legs with flanged feet
- One year limited parts and labor warranty

OPTIONS

- ❑ Two inch bolt on compression tangent draw-off valve with perforated strainer
- ❑ Two inch bolt on plug tangent draw-off valve with perforated strainer
- ❑ Three inch bolt on compression tangent draw-off valve with perforated strainer increases height of kettle
- ❑ Security facility package:
  - a. Security type fasteners with tack welds
  - b. Controls protected with lockable cover
- ❑ Stainless steel protector for the draw-off valve with chain
- ❑ Second year extended limited parts and labor warranty

ACCESSORIES (PACKAGED AND SOLD SEPARATELY)

- ❑ Spring assist hinged stainless steel cover with condensate ring and drop down lift handle
- ❑ Pouring lip strainer
- ❑ Clean-up kit, includes draw-off brush, clean-up brush and paddle scrapper with 40" handle
- ❑ Stainless steel 48" whip
- ❑ Non-perforated strainer to prevent food from entering the draw-off tube during cooking
- ❑ (12") (18" double jointed) single pantry lead-free faucet
- ❑ (12") (18" double jointed) double pantry lead-free faucet
- ❑ Double pantry washdown hose with 16" add-on lead-free faucet with vacuum breaker
- ❑ Double pantry washdown hose with lead-free vacuum breaker
- ❑ Double pantry pot filler with lead-free vacuum breaker

KGLT SERIES – Gas Floor Mounted Tilting ⅔ Jacketed Kettles

Approved by_____ Date_____ Approved by_____ Date_____

KGLT SERIES

Gas Floor Mounted Tilting ⅔ Jacketed Kettles

SERVICE CONNECTIONS

Electric Connection: 110-120V, 50-60 Hz, 5A, with 6 foot cord and three-prong grounding plug.

Gas Connection: ¾" NPT supply line required.

Embossed Gallon/Liter Markings		
20-Gallon	**40-Gallon**	**60-Gallon**
20 - 76	40 - 151	60 - 227
18 - 68	35 - 132	55 - 209
16 - 61	30 - 114	50 - 189
14 - 53	25 - 95	45 - 171
12 - 46	20 - 76	40 - 151
10 - 38	15 - 57	35 - 132
		25 - 95
		20 - 76

TRUE WORKING CAPACITIES (IN 4 OZ. SERVINGS)

80 quarts/20 gallons/76 liters/640 servings
120 quarts/40 gallons/152 liters/1,280 servings
160 quarts/60 gallons/228 liters/1,920 servings

NOTES

- Dimensions which locate the above connections have a tolerance of + or -3" (+ or -75mm). Normal dimensions are in inches. Dimensions in [ ] are in millimeters.
- Installation of backflow preventers, vacuum breakers and other specific code requirements is the responsibility of the owner and installer. It is the responsibility of the owner and installer to comply with local codes.
- Do not use plastic drains.
- Do not connect this unit to a ground-fault circuit-interrupter (GFCI) 125-volt, single-phase, 15- and 20-ampere receptacle. Electronic burner ignition systems are prone to nuisance tripping and possible ignition failure.
- This appliance is manufactured for commercial installation only and is not intended for home use.

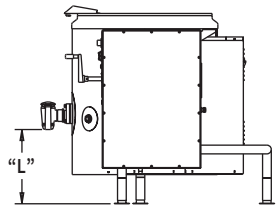

SHOWN WITH OPTIONAL DRAW-OFF VALVE
(2" PLUG VALVE)

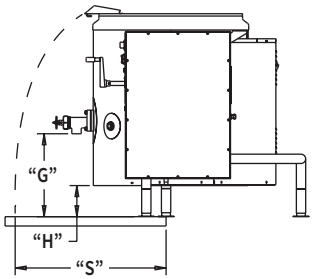

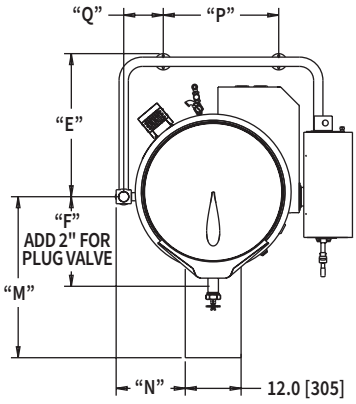

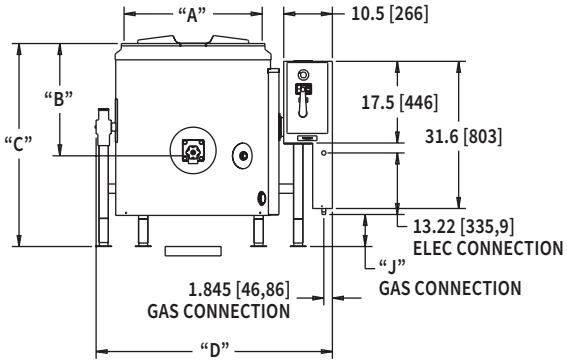

SHOWN WITH OPTIONAL DRAW-OFF VALVE
(2" COMPRESSION VALVE)

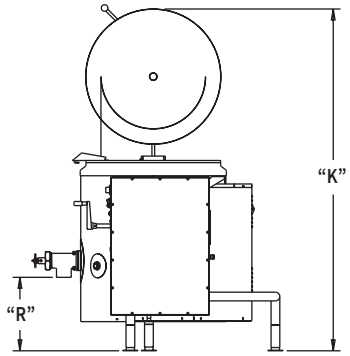

SHOWN WITH OPTIONAL DRAW-OFF VALVE AND LID
(3" COMPRESSION VALVE)

CAD and/or Revit Files Available

Model	True Working Capacity	A	B	C	D	E	F	G	H	J	K	L	M	N	P	Q	R	S
K20GLT	20 gallons	21.8	15.3	38.3	42.7	26.8	16.0	21.4	8.1	6.9	67.1	20.7	28.0	10.8	16.7	8.5	20.4	25.0
	76 liters	554	389	973	1085	681	406	544	206	175	1704	526	711	274	424	216	518	635
K40GLT	40 gallons	25.8	21.2	39.9	46.8	28.8	18.1	17.1	6.6	6.9	71.0	16.3	31.3	12.8	20.8	8.5	16.1	29.4
	152 liters	655	538	1013	1189	732	460	434	168	175	1803	414	795	325	528	216	408	747
K60GLT	60 gallons	29.7	24.1	43.6	50.8	30.8	19.3	17.8	6.7	6.9	78.3	17.0	34.6	14.9	24.8	8.5	16.8	32.7
	227 liters	754	612	1107	1290	782	490	452	170	175	1989	432	879	378	630	216	427	831

As continued product improvement is a policy of Vulcan, specifications are subject to change without notice.

Item # _____ C.S.I. Section 11420

O V E N S

VC44G SERIES
DOUBLE DECK GAS CONVECTION OVENS

Model VC44GD
shown with optional casters

SPECIFICATIONS

Double section gas convection oven, Vulcan-Hart Model No. (VC44GD) (VC44GC). Stainless steel front, sides, top and legs. Independently operated stainless steel doors with double pane windows. Non-sag insulation applied to the top, rear, sides, bottom and doors. Porcelain enamel on steel oven interiors measures 29"w x 22⅛"d x 20"h. Two interior oven lights per section. Five nickel plated oven racks per section measure 28¼" x 20½". Eleven position nickel plated rack guides with positive rack stops. One 50,000 BTU/hr. burner per section. 100,000 total BTU/hr. Electronic spark igniters. Furnished with a two speed ½ H.P. oven blower-motor per section. Oven cool switch for rapid cool down. 120 volt, 60 Hz, 1 ph power supply required. 6' cord and plug. 7.7 amps total draw per section.

Exterior Dimensions:

40¼"w x 41⅛"d (includes motor & door handles) 37¾"d (includes motor only) x 70"h on 8" legs.

CSA design certified. NSF listed.

SPECIFY TYPE OF GAS WHEN ORDERING.
SPECIFY ALTITUDE WHEN ABOVE 2,000 FT.

☐ **VC44GD** Solid state temperature controls adjust from 150° to 500°F. 60 minute timer with audible alarm.

☐ **VC44GC** Computer controls with digital time and temperature readouts. 99-hour timer with audible alarm. Roast and Hold cycle. One hundred programmable menu selections. Shelf I.D. programming.

Double deck ovens are supplied as separate units with a stacking kit.

STANDARD FEATURES

- Stainless steel front, sides, top and legs.
- Independently operated stainless steel doors with double pane windows.
- 50,000 BTU/hr. burner per section, 100,000 BTU/hr. total.
- Electronic spark igniters.
- ½ H.P. two speed oven blower-motor. 120/60/1 with 6' cord and plug. 7.7 amps per section. 15.4 amps total draw.
- Oven cool switch for rapid cool down.
- Porcelain enamel on steel oven interior.
- Five nickel plated oven racks with eleven rack positions per section.
- ¾" rear gas connection with combination gas pressure regulator and safety solenoid system.
- One year limited parts and labor warranty.

OPTIONS

☐ Kosher friendly control package.
☐ Complete prison package.
  ☐ Security screws only.
☐ 208V or 240V, 60 Hz, 1 ph, two speed, ½ H.P. blower motor. 208V, 4.2 amps; 240V, 3.6 amps.
☐ Casters.
☐ Simultaneous chain driven doors.
☐ Control panel mounted on left side of oven.
☐ Stainless steel rear enclosure.
☐ Second year extended limited parts and labor warranty.

ACCESSORIES

☐ Extra oven rack(s).
☐ Rack hanger(s).
☐ Stainless steel drip pan.
☐ Flexible gas hose with quick disconnect and restraining device. Consult price book for available sizes.
☐ Down draft flue diverter for direct vent connection.

a division of ITW Food Equipment Group LLC
P.O. Box 696 ▪ Louisville, KY 40201 ▪ Toll-free: 1-800-814-2028 ▪ Local: 502-778-2791 ▪ Quote & Order Fax: 1-800-444-0602

OVENS

VC44G SERIES
DOUBLE DECK GAS CONVECTION OVENS

INSTALLATION INSTRUCTIONS

1. A combination gas pressure regulator and safety solenoid system is included in this unit. Natural gas is 5.0" W.C., Propane gas is 10.0" W.C.
2. An adequate ventilation system is required for commercial cooking equipment. Information may be obtained by writing to the National Fire Protection Association, Batterymarch Park, Quincy, MA 02289. When writing, refer to NFPA No. 96.
3. These units are manufactured for installation in accordance with ANSZ223.1 (latest edition), National Fuel Gas Code. Copies may be obtained from American Gas Association Inc., Accredited Standards Committee Z223, 400 N. Capitol St. NW, Washington, DC 20001 or the Secretary Standards Council, NFPA, 1 Batterymarch Park, Quincy, MA 02169-7471.
4. Clearances:

	Combustible	Non-combustible
Rear	0"	0"
Right Side	2"	0"
Left Side	1"	0"

5. This appliance is manufactured for commercial installation only and is not intended for home use.

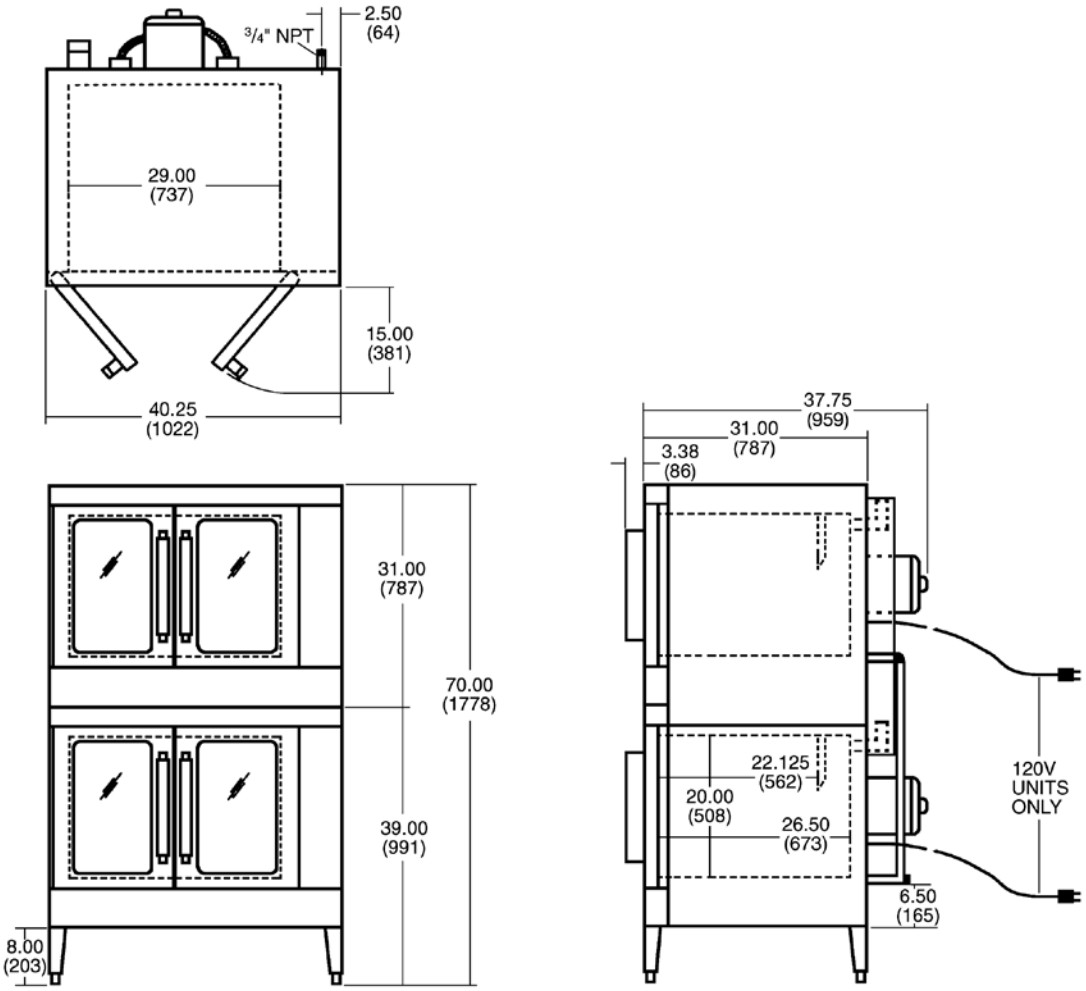

MODEL NO.	WIDTH	DEPTH (INCLUDES HANDLES)	HEIGHT	BTU/HR. PER OVEN	TOTAL BTU/HR.	ELECTRICAL	WEIGHT			
							WITH SKIDS & PACKAGING		WITHOUT SKIDS & PACKAGING	
							LBS.	KG	LBS.	KG
VC44G	40¼"	41⅛"	70"	50,000	100,000	120/60/1	928	422	820	372

a division of ITW Food Equipment Group LLC
P.O. Box 696 ▪ Louisville, KY 40201 ▪ Toll-free: 1-800-814-2028 ▪ Local: 502-778-2791 ▪ Quote & Order Fax: 1-800-444-0602

NOTE: In line with its policy to continually improve its products, Vulcan reserves the right to change materials and specifications without notice.

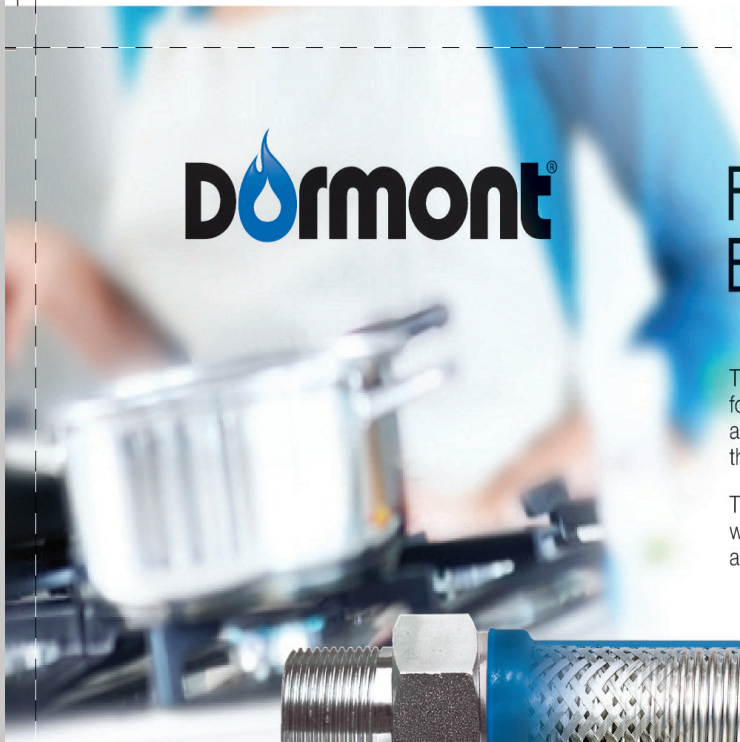

Dormont®

Foodservice Moveable Equipment Installation Products

The Dormont Blue Hose™ is the heart of the Safety System, specifically engineered for caster-mounted commercial cooking equipment. The Blue Hose includes an antimicrobial protective PVC coating, and our Stress Guard® technology that makes the hose easier to install and dramatically reduces stress on the hose ends.

The fuel gas codes require the use of an ANSI Z21.69/CSA 6.16 moveable gas connector with all appliances that may or may not utilize casters and, under normal use, are moved on a regular basis for service, positioning or area cleanliness.

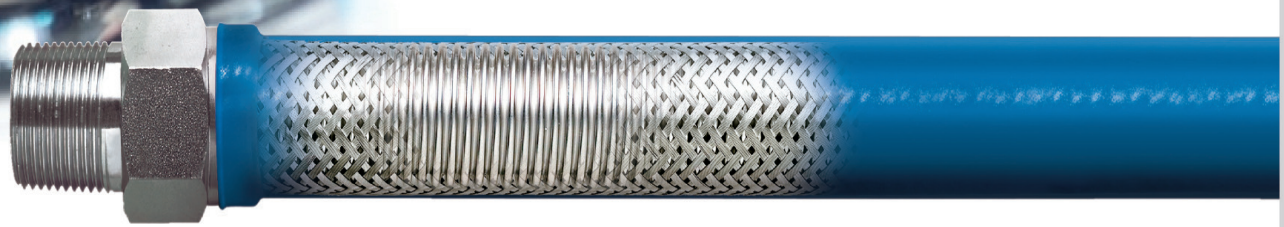

STRESS GUARD® TECHNOLOGY

Rotation technology reduces stress on both ends of the hose

Stainless Steel Construction
Heavy-duty, flexible, corrugated 304 stainless steel tubing

Stainless Steel Braid
Tight-weave braid prevents corrugations from stretching as equipment is moved

Antimicrobial PVC Coating
Inhibits growth of bacteria, mold and mildew on the gas connector

The Dormont Safety System™ is the first and only complete gas equipment connection system specifically engineered for the commercial kitchen. It is a complete system of connection products designed with the safety of your kitchen, the food you serve, your employees, and your business in mind.

The Safety System includes the famous Dormont Blue Hose and our exclusive safety-based fittings - the SnapFast quick-disconnect, the Safety Quik quick-disconnect valve, and the Swivel MAX. Safe, unique, and affordable, the Dormont Safety System provides peace of mind for the gas connections in your commercial kitchen.

Safety Quik

- Prevents user from turning on gas while appliance is disconnected
- Thermal shut-off when internal temperature exceeds 350°F (177°C)

SnapFast

- One-handed quick-disconnect fitting
- Thermal shut-off when internal temperature exceeds 350°F (177°C)

SwivelMAX

- Reduces stress on connector
- Increases kitchen aisle space by allowing connector to be positioned closer to the wall

Restraining Cable

- Prevents transmission of strain to connector
- Provided 1' shorter than the gas connector

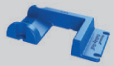

Safety-Set
Always on the mark

- Ensures cooking equipment is always positioned in design-specified location
- Fast installation with choice of adhesive foam tape or thumbscrews

A Watts Water Technologies Company USA: 6015 Enterprise Drive, Export, PA 15632 • 1-800-DORMONT • Dormont.com

Dormont® Moveable Commercial Equipment Kits

KIT SOLUTIONS	50 = ½" ID 75 = ¾" ID 100 = 1" ID 125 = 1-¼" ID PART NUMBER	BTU/hr Minimum Flow Capacity*	THE BLUE HOSE™	SnapFast® QUICK-DISCONNECT	Swivel MAX® 1st SWIVEL	Swivel MAX® 2nd SWIVEL	Safety Quik® VALVE	RESTRAINING CABLE
Standard Kit (KIT)[1] The Dormont Blue Hose™ SnapFast Quick-Disconnect Restraining Cable	1650KIT36	77K	√	√				√
	1650KIT48	68K	√	√				√
	1650KIT60	60K	√	√				√
	1675KIT36	218K	√	√				√
	1675KIT48	180K	√	√				√
	1675KIT60	158K	√	√				√
	16100KIT36	379K	√	√				√
	16100KIT48	334K	√	√				√
	16100KIT60	294K	√	√				√
Single Swivel MAX Kit (KITS)[2] The Dormont Blue Hose™ SnapFast Quick-Disconnect One Swivel MAX Swivel Restraining Cable	1650KITS36	72K	√	√	√			√
	1650KITS48	63K	√	√	√			√
	1650KITS60	56K	√	√	√			√
	1675KITS36	203K	√	√	√			√
	1675KITS48	167K	√	√	√			√
	1675KITS60	147K	√	√	√			√
	16100KITS36	353K	√	√	√			√
	16100KITS48	310K	√	√	√			√
	16100KITS60	274K	√	√	√			√
Double Swivel MAX Kit (KIT2S)[3] The Dormont Blue Hose™ SnapFast Quick-Disconnect Two Swivel MAX Swivels Restraining Cable	1650KIT2S36	69K	√	√	√	√		√
	1650KIT2S48	60K	√	√	√	√		√
	1650KIT2S60	54K	√	√	√	√		√
	1675KIT2S36	193K	√	√	√	√		√
	1675KIT2S48	160K	√	√	√	√		√
	1675KIT2S60	140K	√	√	√	√		√
	16100KIT2S36	336K	√	√	√	√		√
	16100KIT2S48	295K	√	√	√	√		√
	16100KIT2S60	261K	√	√	√	√		√
Safety Quik Kit (KITCF)[4] The Dormont Blue Hose™ Safety Quik Quick-Disconnect Restraining Cable	1650KITCF36	77K	√				√	√
	1650KITCF48	68K	√				√	√
	1650KITCF60	60K	√				√	√
	1675KITCF36	218K	√				√	√
	1675KITCF48	180K	√				√	√
	1675KITCF60	158K	√				√	√
	16100KITCF36	379K	√				√	√
	16100KITCF48	334K	√				√	√
	16100KITCF60	294K	√				√	√
Safety Quik Single Swivel MAX Kit (KitCFS)[5]	1650KITCFS36	72K	√		√		√	√
	1650KITCFS48	63K	√		√		√	√
	1650KITCFS60	56K	√		√		√	√
	1675KITCFS36	203K	√		√		√	√
	1675KITCFS48	161K	√		√		√	√
	1675KITCFS60	147K	√		√		√	√
	16100KITCFS36	353K	√		√		√	√
	16100KITCFS48	310K	√		√		√	√
	16100KITCFS60	274K	√		√		√	√

[1] Includes Full Port Gas Valve and (2) 90° Street Elbows
[2] Includes Full Port Gas Valve and (1) 90° Street Elbow
[3] Includes Full Port Gas Valve
[4] Includes (2) 90° Street Elbows
[5] Includes (1) 90° Street Elbow

Indicates most commonly stocked item

*BTU/hr Minimum Flow Capacity (0.64 Sp.Gr., 1000 BTU/ft^3 Natural Gas at 0.5" wc pressure drop)

ADDITIONAL CONFIGURATIONS ARE AVAILABLE IN OUR CATALOG.

Add PS to the end of any part number to include the Safety-Set® wheel placement system

We guarantee our commercial gas connectors for the life of the original appliance to which it is connected.

S-D-BUYGUIDE 1538

© Dormont 2015

Belshaw www.belshaw.com

Product Line **OPEN KETTLE DONUT FRYERS (Gas)**
Models 718L • 724 • 734 (CG and FG models)

718L, 724 and 734 Open Kettle Gas Fryers

CG = Electronic ignition, electronic temp control
FG = Standing pilot ignition, thermostat control

Belshaw open kettle gas fryers are designed to efficiently produce all varieties of cake and yeast raised donuts. Almost any size and shape of donut can be made in these adaptable and dependable fryers.

- **Compact.** The space needed to operate a Belshaw 718LCG gas or electric fryer is 6 feet x 3½ feet (180 x 110 cm), including cake donut depositor and open drain tray. Larger models need only slightly increased space allowance.
- **Productive.** From 60 to 120 dozen donuts per hour.
- **Efficient.** Gas efficiency is maximized for rapid heat uptake and energy saving. The electronic controller used by CG models keeps temperature within a narrow band, and displays current temperature and set temperature at all times.
- **Convenient.** With a Belshaw Open Kettle donut system, the fryer, cake donut depositor, and filtration system are each designed to work together. Easy-to-use submerger screens can be added to further improve production efficiency.
- **Electronic temperature controller.** (supplied with CG models). Located on the fryer right side door. The electronic controller keeps temperature within a narrow band, and displays current temperature and set temperature at all times.
- **Belshaw provides a full line of companion equipment** designed for donut production:
  - Type B or Type F cake donut depositors
  - EZ Melt Filtration system
  - CP Cabinet Proofer
  - H&I-2 or H&I-4 Icing Tables
  - HG or HGEZ Hand Glazers

734CG Gas Fryer (shown with Type 'F' donut depositor, EZ Melt filter and submerger screen)

718L
CG or FG
Holds up to
24 donuts
Capacity up to
60
dozen/hour

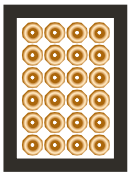

26" (66cm)
18" (46cm)

724
CG or FG
Holds up to
36 donuts
Capacity up to
90
dozen/hour

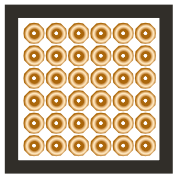

24" (61cm)
24" (61cm)

734
CG or FG
Holds up to
48 donuts
Capacity up to
120
dozen/hour

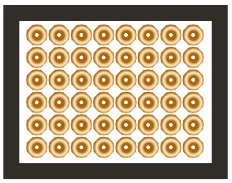

24" (61cm)
34" (86cm)

**Capacity measured @120 seconds fry time with standard size donuts.*

WEB

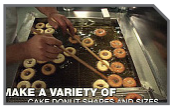

VIDEO

Belshaw 814 44th St NW, Suite 103, Auburn, WA 98001
Phone 1-800-BELSHAW 800.578.2547 (+1)206.322.5474
Customer Service info@belshaw.com **Technical Support** service@belshaw.com

Belshaw-SS-OpenKettleGas-v02-091722

©2022

Belshaw www.belshaw.com

Product Line **OPEN KETTLE DONUT FRYERS (Gas)**

Models 718L • 724 • 734 (CG and FG models)

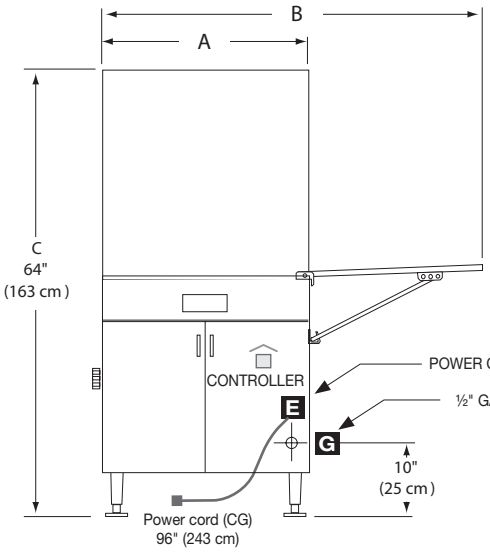

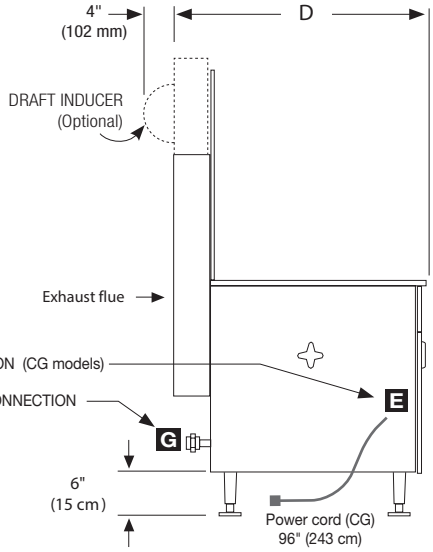

CLEARANCE

FROM SIDES:
2 inches (51 mm)

FROM BACK:
6 inches (153 mm)

AT LEFT:
24 inches (635mm) clear space recommended if cake donut depositor is used. (Can be changed to right side).

CG MODELS
(Electronic controller)

FG MODELS
(Thermostat)

STANDARD FEATURES

- Stainless steel cabinet, kettle, and drain tray, with sloping surface around fryer kettle.
- CG Models (120 V, 240 V)
  - Electronic ignition.
  - Electronic temperature controller, displays current temperature and keeps heat within narrow band (normally ±2°).
- FG models (no electric power required)
  - Standing pilot ignition.
  - Dial thermostat.
- High-temperature limit switch.
- Adjustable, bolt-down legs.
- Drain tray on right side of fryer. (Field reversible to left side.)
- Frame reinforcement for mounting a Belshaw Cake Donut Depositor, installed at left. (Field reversible to right side.)
- Heavy duty drain and valve, with exterior handle.
- 2 nickel plated cake donut frying screens with handles.
- Natural Gas and Propane models are available.
- Certified to NSF-4, ANSI Z83.11a and CSA1.8a.2004.

OPTIONS AND ACCESSORIES

- Submerger screens, for submerging donut 'holes' and similar products.
- Draft inducer kit.
- EZMelt or SF filtration systems (fit underneath fryer).
- Yeast-raised donut screens (no handles).
- Detachable handles OR Screen Cradle for lifting screens from fryer

VENTILATION, FIRE SUPPRESSION AND MAKEUP AIR

- Customer is responsible for ventilation hood, makeup air, and/or fire suppression as required by local codes.

SPECIFICATIONS		718LCG	724CG	734CG
FRYING AREA	**inch**	18” x 26”	24” x 24”	34” x 24”
	cm	46 x 66 cm	61 x 61 cm	86 x 61 cm
SCREEN SIZE	**inch**	17" x 25"	23" x 23"	33" x 23"
SHORTENING CAPACITY (approx)	**lb**	96 lbs	119 lbs	215 lbs
	kg	44 kg	54 kg	98 kg
BTU/hour		44,000	66,000	89,000
GAS CONNECTION	**inch**	Natural Gas 5"-14" W.C – Propane 11"-14" W.C.		
Connector: 1/2" NPT	**pascal**	Natural Gas:1.24–3.4 kpa – Propane: 2.4-3.4 kpa		
VOLTS *(CG models)*	**volt**	120V-50/60-1 *or* 240V-50/60-1 (specify)		
AMPS	**amp**	0.5 A @120V *or* 0.25 A @240V		
PLUG		NEMA 5-15P (120V) or NEMA 6-15P (240V) Included with N. America compatible models only		
CORD LENGTH		8 feet (2.43 m)		
SUBMERGER *(optional)*	**part number**	718LG-1541	724G-1547	734G-1536
DRAFT INDUCER *(recommended for Propane, and NG at altitude 3,000 ft (915 m)*		718CG-1000	724CG-1000	734CG-1000
WIDTH (A) *(drain tray CLOSED)*	**inch**	27"	32"	42"
	cm	69 cm	81 cm	107 cm
WIDTH (B) *(drain tray OPEN)*	**inch**	48"	56"	77"
	cm	122 cm	142 cm	196 cm
HEIGHT (C)	**inch**	64"	64"	64"
	cm	163 cm	163 cm	163 cm
DEPTH (D)	**inch**	40"	38"	38"
	cm	102 cm	97 cm	97 cm
SHIPPING DIMENSIONS	**inch**	42 x 48 x 54	42 x 48 x 54	50 x 44 x 53
	cm	107x122x137	107x122x137	127x102x133
SHIPPING WEIGHT	**lb**	298 lbs	320 lbs	430 lbs
	kg	135 kg	145 kg	195 kg
FREIGHT CLASS		100	100	100

Belshaw 814 44th St NW, Suite 103, Auburn, WA 98001
Phone 1-800-BELSHAW 800.578.2547 (+1)206.322.5474
Customer Service info@belshaw.com **Technical Support** service@belshaw.com

©2022

an Ali Group Company

The Spirit of Excellence

Belshaw www.belshaw.com

Product Line **SHORTENING FILTERS (Heated)**

Models EZMelt 18 • EZMelt 24 • EZMelt 34

DESCRIPTION OF EZMELT FILTRATION SYSTEM

- Belshaw's EZMelt shortening melter-filters effectively clean and recycle shortening for any fryer with capacity up to 37 gallons (138 Liters). EZMelts are heated in order to melt solid shortening, and to quickly and easily top up your fryer with shortening when you need it.
- With the EZMelt, shortening can be pumped directly to your fryer, at the push of a foot pedal. This method is faster and safer than other methods such as dropping in shortening blocks. The EZMelt does this using a refill hose which attaches directly to a Belshaw fryer.

EZMelt 18 Shortening Filter

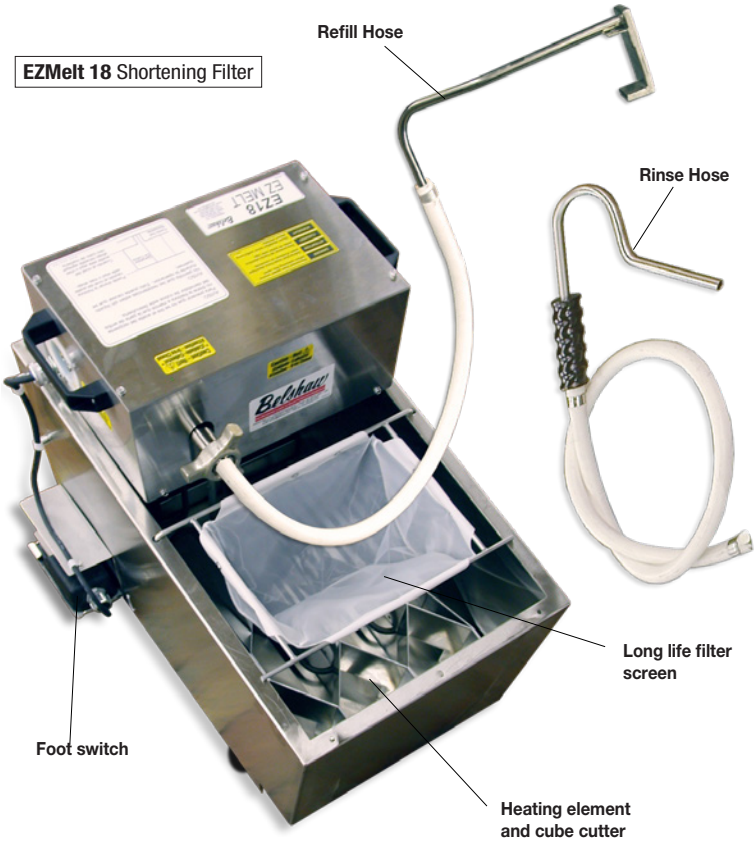

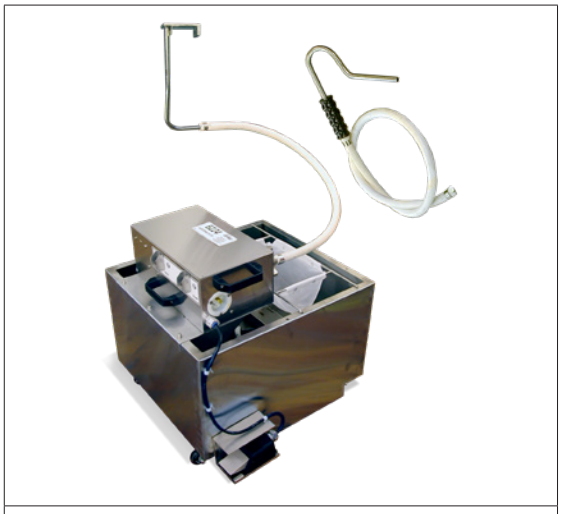

EZMelt 24 Shortening Melter-Filter

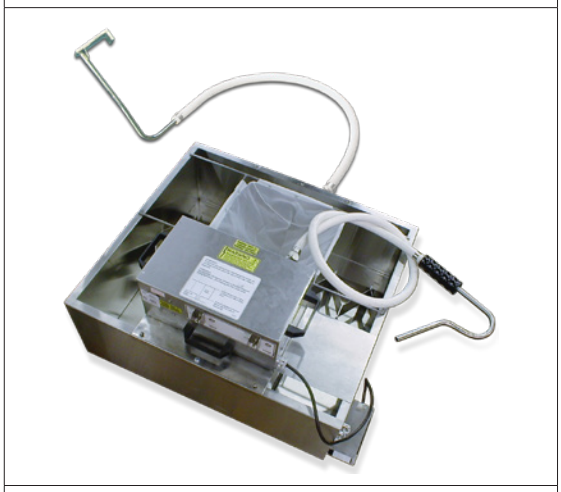

EZMelt 34 Shortening Melter-Filter

STANDARD FEATURES

- Fits under compatible Belshaw Open Kettle fryers. Can be rolled into and out of position.
- Compatible with these Belshaw Open Kettle Fryers:
  - 618L-624-634 (Open Kettle Electric)
  - 718L-724-734 (Open Kettle Gas)
  - Donut Robot® fryers (except Mark II Gas, Mark II GP Gas)
  - Insider.
- Can be used with any donut shortening.
- Heating element with factory set thermostat to 225°F/107°C
- Entire control panel and element tilts up for easy cleaning below.
- Long-life synthetic filter screen. (Requires replacement once per year under normal conditions.)
- 2 hoses:
  - **Refill Hose.** Heat resistant hose with plated steel nozzle designed to attach to compatible Belshaw fryers (see hose compatibility table on next page).
  - **Rinse Hose.** Heat resistant hose with hook end, designed for flushing debris while draining and filtering fryer.
- Heavy duty pump & motor for pumping shortening to the fryer on demand.
- Moisture repellent foot switch for activating pump.
- Integrated cube cutter for fast melting of solid shortening blocks up to 50 lbs (22.7 kg).
- High-temperature limit safety switch.
- Heavy duty stainless steel frame, tank and casters.
- Certified to NSF-4, CSA-C22.2, and UL-1889

Recommended for Zero Trans Fat shortening

- If zero trans fat shortenings are used, they gradually become thicker at ambient room temperatures. This can lead to pump blockages and failures with standard filters. Using the heated EZMelt overcomes this problem.

Belshaw 814 44th St NW, Suite 103, Auburn, WA 98001
Phone 1-800-BELSHAW 800.578.2547 (+1)206.322.5474
Customer Service info@belshaw.com **Technical Support** service@belshaw.com

Belshaw-SS-EZMelt-v02-091722

©2022

Belshaw www.belshaw.com

Product Line **SHORTENING FILTERS (Heated)**

Models EZMelt 18 • EZMelt 24 • EZMelt 34

MODEL SELECTION

Model	Recommended for Fryer models	Full Tank Capacity* (approximate)	Full Shortening Capacity* (by weight, approximate)	* Indicates the total tank capacity when full of shortening. In practice, avoid filling the tank completely as spills may occur.
EZMelt 18	618, 718L, Donut Robot® Mark II, Mark II GP, Mark II-Gas, Mark II GP-Gas, Mark V, Mark V GP, Insider	25 Gallons (94 liters)	185 lbs (84 kg)	
EZMelt 24	624, 724	31 Gallons (118 liters)	233 lbs (106 kg)	
EZMelt 34	734, Donut Robot® Mark VI, Mark VI-Deep	45 Gallons (170 liters)	335 lbs (152 kg)	

ACCESSORIES (FILTER SCREENS AND REFILL HOSES)

- 'Right Hand Operation' as stated below=Operator stands in front of fryer kettle 'Left Hand Operation'=Operator stands behind fryer control panel

Item Nbr	Description	Connects from...	Connects to....
SM100-0002	Synthetic mesh filter screen for EZMelt 18 and EZMelt 24 (1 screen supplied standard with new machines)		
EZ34-0027	Synthetic mesh filter screen for EZMelt 34 (1 screen supplied standard with new machines)		
EZ18-0506	Fill Hose	EZMelt 18	618L, 718L
EZ24-0505	Fill Hose	EZMelt 24	624, 724
EZ34-0505	Fill Hose	EZMelt 34	734
SM100-0507RH	Fill Hose, 30" long, Right hand operation	EZMelt 18	Mark II / II GP • Mark V / V GP
SM100-0507LH	Fill Hose, 30" long, Left hand operation	EZMelt 18	Mark II / II GP • Mark V / V GP
SM100-0507LH-42	Fill Hose, 42" long, INSIDER	EZMelt 18	Mark II / II GP • Mark V / V GP
EZ6-0507	Fill Hose, 48" long, Left hand operation	EZMelt 34	Mark VI
EZ6-0510	Fill Hose, 48" long, Right hand operation	EZMelt 34	Mark VI
EZ6-0510R	Fill Hose, 60" long, Right hand operation	EZMelt 34	Mark VI

MACHINE DIMENSIONS AND SHIPPING DATA

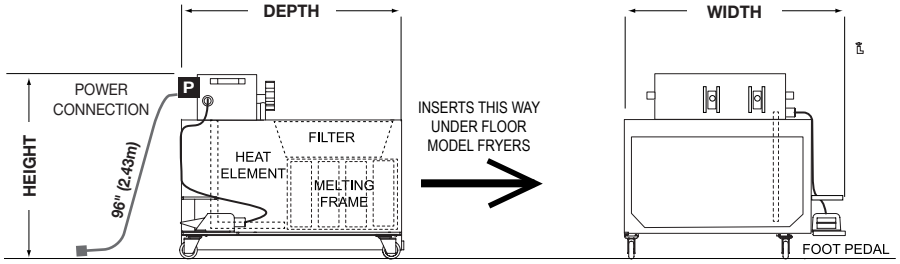

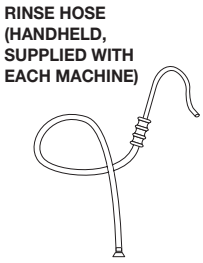

- Shipping data and freight class are estimates for North America only. Shipments are usually in carton. International shipments may be on pallet.

Model	Machine Dimensions (Width x Depth x Height)	Shipping carton dimensions (Width x Depth x Height)	Weight	Freight Class
EZMelt 18	21 x 27 x 24 inches (53 x 69 x 61 cm)	26 x 27 x 27 inches (66 x 69 x 69 cm)	119 lbs (54 kg)	150
EZMelt 24	25 x 25 x 24 inches (64 x 64 x 61 cm)	26 x 27 x 27 inches (66 x 69 x 69 cm)	126 lbs (57 kg)	150
EZMelt 34	35 x 29 x 22 inches (89 x 74 x 56 cm)	40 x 48 x 30 inches (102 x 122 x 76 cm)	189 lbs (114 kg)	150

ELECTRICAL DATA

Model	120V/50-60/1	208-240V/50-60/1
EZMelt 18-24-34 (all models)	1.8 KW, 15 A	1.8-2.3 KW, 9.5-10.3 A
Plug (supplied with North America-compatible models only)	NEMA L5-20P	NEMA L6-20P

CERTIFICATIONS

- Certified to UL-1889, NSF-4, and CSA C22.2.
- CE models available.

Belshaw 814 44th St NW, Suite 103, Auburn, WA 98001
Phone 1-800-BELSHAW 800.578.2547 (+1)206.322.5474
Customer Service info@belshaw.com **Technical Support** service@belshaw.com

©2022

an Ali Group Company

The Spirit of Excellence

Belshaw www.belshaw.com

Product Line **PROOFING AND FRYING SCREENS**

Part #'s 618-0007A • 624-0007A • 634-0013A

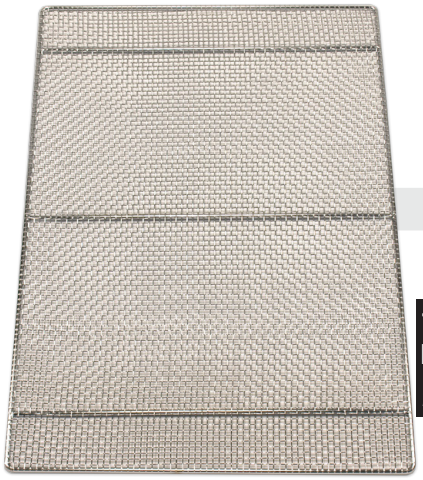

17" x 25" Screen
Part # 618-0007A
for 618L, 718L fryers

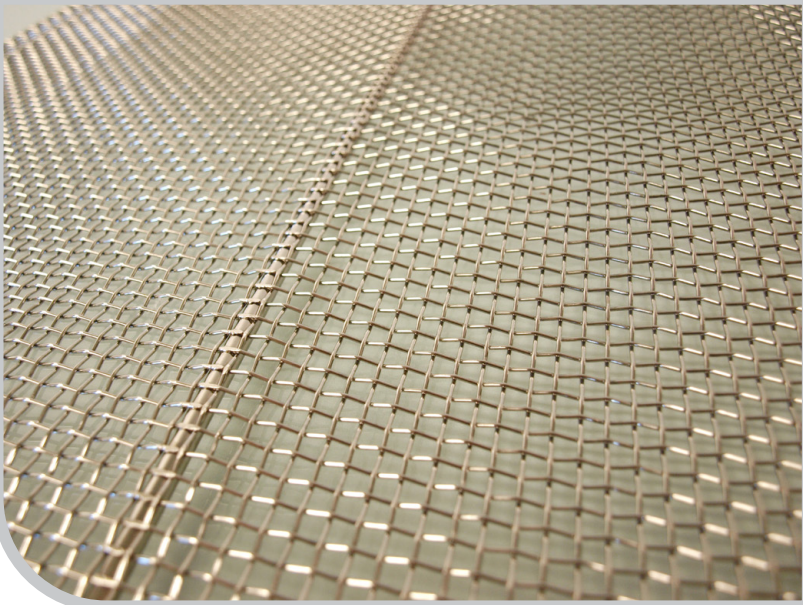

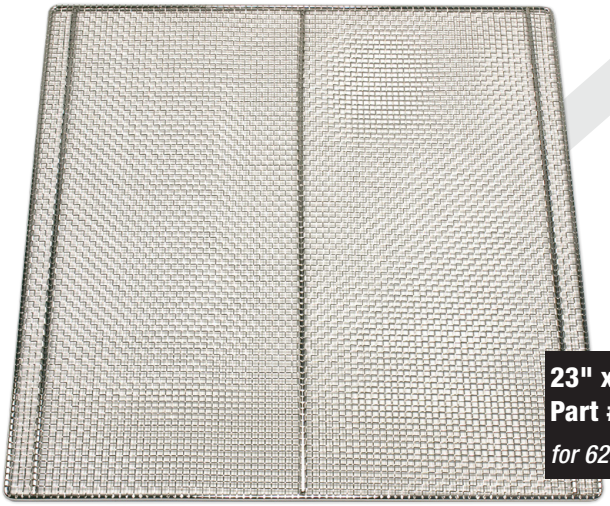

23" x 23" Screen
Part # 624-0007A
for 624, 724 fryers

33" x 23" Screen
Part # 634-0013A
for 634, 734 fryers

Proofing and Frying Screens

- High quality plated finish w/ Electroless Nickel .0005
- 4-mesh #18 wire
- All welded intersections
- For proofing and frying donuts and similar products
- 3 sizes for standard open kettle donut fryers

Shipping dimensions

	Shipping Dimensions (Carton of 12)	Shipping weight (Carton of 12)
618-0007A	18" x 25" x 5"	42 lbs
624-0007A	24" x 24" x 5"	54 lbs
634-0013A	34" x 24" x 5"	75 lbs

Detachable Handles

- Lift 1 screen safely using hooks that penetrate screen mesh.
- Stay cool even when dipped in fryer.
- Never get in the way.
- One size fits all.
- Part #616-0007C (1 detachable handle)

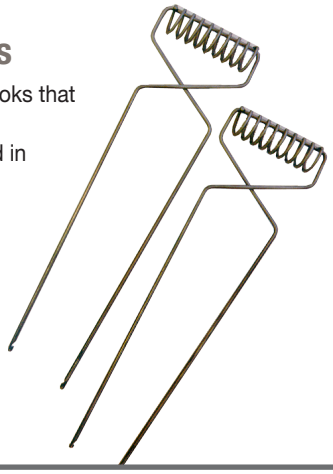

Belshaw 814 44th St NW, Suite 103, Auburn, WA 98001
Phone 1-800-BELSHAW 800.578.2547 (+1)206.322.5474
Customer Service info@belshaw.com **Technical Support** service@belshaw.com

©2022

Belshaw-SSA-FryerScreens-prov0101mb-082622

an Ali Group Company

The Spirit of Excellence

Belshaw www.belshaw.com

Product Line **OPEN KETTLE FRYERS**

Model Screen Cradle

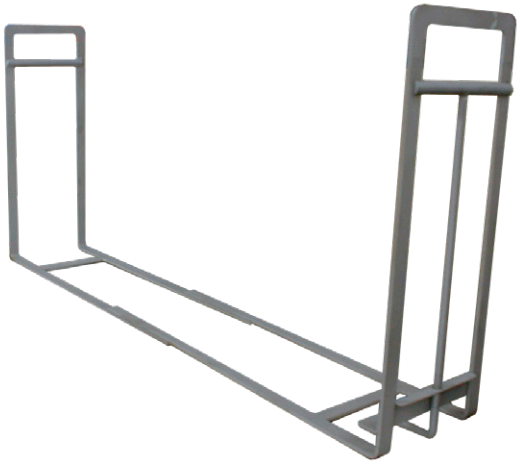

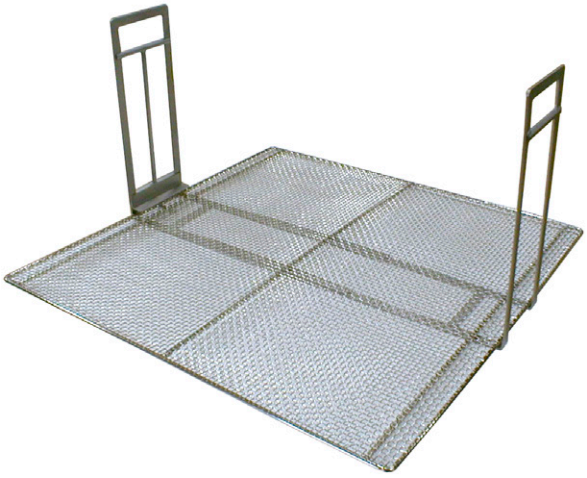

DESCRIPTION

- Used for inserting and removing donut screens from Open Kettle fryers.
- Material used: Coated steel.
- As shown in photo and drawing below.
- Shipping weight: 5 lbs

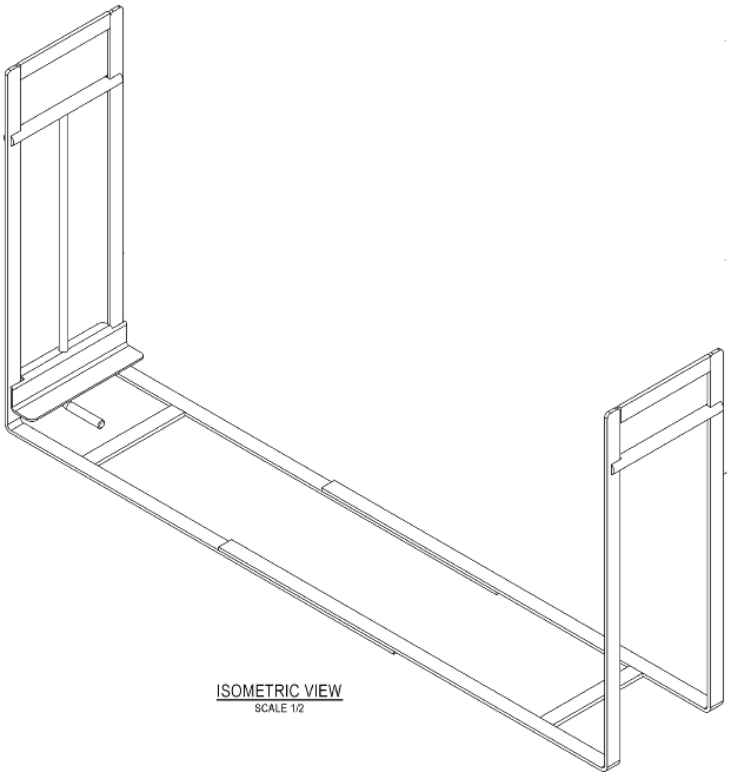

PART NUMBER	WIDTH	SCREEN COMPATIBILITY	FRYER COMPATIBILITY
618L-1037	17½ inch (470 mm)	618-0007A	618L, 718LCG, 718LFG
624-1037	23½ inch (597 mm)	624-0007A	624, 724CG, 724FG
634-1037	33½ inch (851 mm)	634-0013A	634, 734CG, 734FG

Belshaw 814 44th St NW, Suite 103, Auburn, WA 98001
Phone 1-800-BELSHAW 800.578.2547 (+1)206.322.5474
Customer Service info@belshaw.com **Technical Support** service@belshaw.com

©2022

Belshaw-SS-ScreenCradle-prov01-111722

an Ali Group Company

The Spirit of Excellence

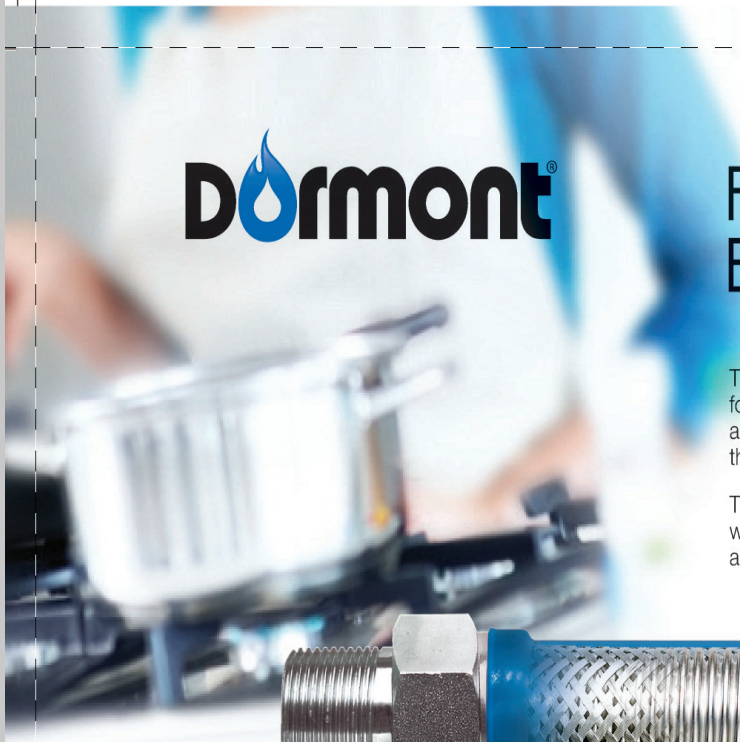

Dormont®

Foodservice Moveable Equipment Installation Products

The Dormont Blue Hose™ is the heart of the Safety System, specifically engineered for caster-mounted commercial cooking equipment. The Blue Hose includes an antimicrobial protective PVC coating, and our Stress Guard® technology that makes the hose easier to install and dramatically reduces stress on the hose ends.

The fuel gas codes require the use of an ANSI Z21.69/CSA 6.16 moveable gas connector with all appliances that may or may not utilize casters and, under normal use, are moved on a regular basis for service, positioning or area cleanliness.

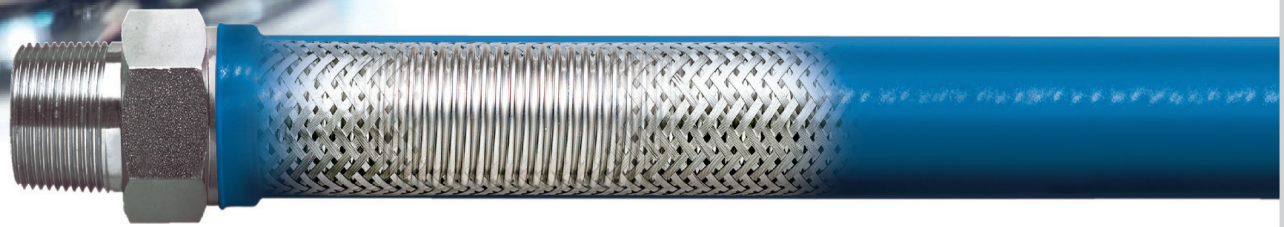

STRESS GUARD® TECHNOLOGY

Rotation technology reduces stress on both ends of the hose

Stainless Steel Construction
Heavy-duty, flexible, corrugated 304 stainless steel tubing

Stainless Steel Braid
Tight-weave braid prevents corrugations from stretching as equipment is moved

Antimicrobial PVC Coating
Inhibits growth of bacteria, mold and mildew on the gas connector

The Dormont Safety System™ is the first and only complete gas equipment connection system specifically engineered for the commercial kitchen. It is a complete system of connection products designed with the safety of your kitchen, the food you serve, your employees, and your business in mind.

The Safety System includes the famous Dormont Blue Hose and our exclusive safety-based fittings - the SnapFast quick-disconnect, the Safety Quik quick-disconnect valve, and the Swivel MAX. Safe, unique, and affordable, the Dormont Safety System provides peace of mind for the gas connections in your commercial kitchen.

Safety Quik

- Prevents user from turning on gas while appliance is disconnected
- Thermal shut-off when internal temperature exceeds 350°F (177°C)

SnapFast

- One-handed quick-disconnect fitting
- Thermal shut-off when internal temperature exceeds 350°F (177°C)

SwivelMAX

- Reduces stress on connector
- Increases kitchen aisle space by allowing connector to be positioned closer to the wall

Restraining Cable

- Prevents transmission of strain to connector
- Provided 1' shorter than the gas connector

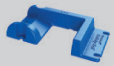

Safety-Set
Always on the mark

- Ensures cooking equipment is always positioned in design-specified location
- Fast installation with choice of adhesive foam tape or thumbscrews

A Watts Water Technologies Company USA: 6015 Enterprise Drive, Export, PA 15632 • 1-800-DORMONT • Dormont.com

Dormont® Moveable Commercial Equipment Kits

KIT SOLUTIONS	50 = ½" ID 75 = ¾" ID 100 = 1" ID 125 = 1-¼" ID PART NUMBER	BTU/hr Minimum Flow Capacity*	THE BLUE HOSE™	SnapFast® QUICK-DISCONNECT	Swivel MAX® 1st SWIVEL	Swivel MAX® 2nd SWIVEL	Safety Quik® VALVE	RESTRAINING CABLE
Standard Kit (KIT)[1] The Dormont Blue Hose™ SnapFast Quick-Disconnect Restraining Cable	1650KIT36	77K	√	√				√
	1650KIT48	68K	√	√				√
	1650KIT60	60K	√	√				√
	1675KIT36	218K	√	√				√
	1675KIT48	180K	√	√				√
	1675KIT60	158K	√	√				√
	16100KIT36	379K	√	√				√
	16100KIT48	334K	√	√				√
	16100KIT60	294K	√	√				√
Single Swivel MAX Kit (KITS)[2] The Dormont Blue Hose™ SnapFast Quick-Disconnect One Swivel MAX Swivel Restraining Cable	1650KITS36	72K	√	√	√			√
	1650KITS48	63K	√	√	√			√
	1650KITS60	56K	√	√	√			√
	1675KITS36	203K	√	√	√			√
	1675KITS48	167K	√	√	√			√
	1675KITS60	147K	√	√	√			√
	16100KITS36	353K	√	√	√			√
	16100KITS48	310K	√	√	√			√
	16100KITS60	274K	√	√	√			√
Double Swivel MAX Kit (KIT2S)[3] The Dormont Blue Hose™ SnapFast Quick-Disconnect Two Swivel MAX Swivels Restraining Cable	1650KIT2S36	69K	√	√	√	√		√
	1650KIT2S48	60K	√	√	√	√		√
	1650KIT2S60	54K	√	√	√	√		√
	1675KIT2S36	193K	√	√	√	√		√
	1675KIT2S48	160K	√	√	√	√		√
	1675KIT2S60	140K	√	√	√	√		√
	16100KIT2S36	336K	√	√	√	√		√
	16100KIT2S48	295K	√	√	√	√		√
	16100KIT2S60	261K	√	√	√	√		√
Safety Quik Kit (KITCF)[4] The Dormont Blue Hose™ Safety Quik Quick-Disconnect Restraining Cable	1650KITCF36	77K	√				√	√
	1650KITCF48	68K	√				√	√
	1650KITCF60	60K	√				√	√
	1675KITCF36	218K	√				√	√
	1675KITCF48	180K	√				√	√
	1675KITCF60	158K	√				√	√
	16100KITCF36	379K	√				√	√
	16100KITCF48	334K	√				√	√
	16100KITCF60	294K	√				√	√
Safety Quik Single Swivel MAX Kit (KitCFS)[5]	1650KITCFS36	72K	√		√		√	√
	1650KITCFS48	63K	√		√		√	√
	1650KITCFS60	56K	√		√		√	√
	1675KITCFS36	203K	√		√		√	√
	1675KITCFS48	161K	√		√		√	√
	1675KITCFS60	147K	√		√		√	√
	16100KITCFS36	353K	√		√		√	√
	16100KITCFS48	310K	√		√		√	√
	16100KITCFS60	274K	√		√		√	√

[1] Includes Full Port Gas Valve and (2) 90° Street Elbows
[2] Includes Full Port Gas Valve and (1) 90° Street Elbow
[3] Includes Full Port Gas Valve
[4] Includes (2) 90° Street Elbows
[5] Includes (1) 90° Street Elbow

Indicates most commonly stocked item

*BTU/hr Minimum Flow Capacity (0.64 Sp.Gr., 1000 BTU/ft^3 Natural Gas at 0.5" wc pressure drop)

ADDITIONAL CONFIGURATIONS ARE AVAILABLE IN OUR CATALOG.

Add PS to the end of any part number to include the Safety-Set® wheel placement system

We guarantee our commercial gas connectors for the life of the original appliance to which it is connected.

S-D-BUYGUIDE 1538

© Dormont 2015

INSTALLATION MANUAL

Melink Corporation (513) 965-7300 www.melinkcorp.com

P/N 203-3103
Revision 191107

Table of Contents

Step	Installation	Contractor	Page
	Tools Required, Controller Models	Reference	3
1	Install System Controller	Electrical	4
2	Install Variable Frequency Drive	Electrical	6
3	Install Touchpad	Mechanical	8
4	Install Temperature Sensor(s)	Mechanical	10
5	Install Canopy Sensor	Mechanical	13
6	Install Hood Controllers	Mechanical	15
7	Install Optic Sensors	Mechanical	17
8	Install Air Purge Units	Mechanical	21
9	Install Cables	Mechanical	22
10	Setting Addresses	Mechanical	28
11	Install Options (if applicable)	Mechanical	29
12	Appendix A - Typical Drawing	Reference	35
13	Appendix B - Program Settings	Reference	38

Tools & Materials Required

Tools Required

- Drill and Drill Bits (Cobalt is best for stainless steel) - bit sizes: 1/8” & 1/4”
- Hole Cutter or Punch for Stainless Steel with cutter sizes: 1-1/2” & 1-1/8”
- Adjustable Pliers and Adjustable Wrench
- Screwdrivers - Straight & Phillips, Large and Small
- Wire Cutter and Wire Stripper
- Measuring Tape and Level
- Step Ladder

Materials Required

- Suitable fasteners for mounting the System Controller and Variable Frequency Drive (VFD)
  - hollow cinder block (3/16” toggle bolts)
  - concrete or filled cinder block (lead anchors 1/2” dia. with 1/4” x 1-14” lag screws)
  - drywall (3/16” toggle bolts)
  - plywood (#8 X 1-1/4” wood screws)
  - metal back-plate (#8 X 1-1/4” sheet metal screws)
- Conduit and wire for wiring the System Controller and VFDs

Note: All high voltage wiring to be completed by trained service personnel. (Local code may require a licensed electrician.)

System Controller Models

- There are two models of System Controllers. Installation is identical for both models.

Model	Number of Hood Network Ports	Auxiliary Input Module Capability?	BACnet TCP/IP Capability?
System Controller (SC)	4	Yes	Yes
System Controller Lite (SC-L)	2	No	No

Intelli-Hood®

STEP 1

Install System Controller

A

Select System Controller Location

For new construction, the hood manufacturer typically provides a utility cabinet in which to mount the System Controller. If the hood has a utility cabinet with extra space, mount the System Controller (and VFDs) there.

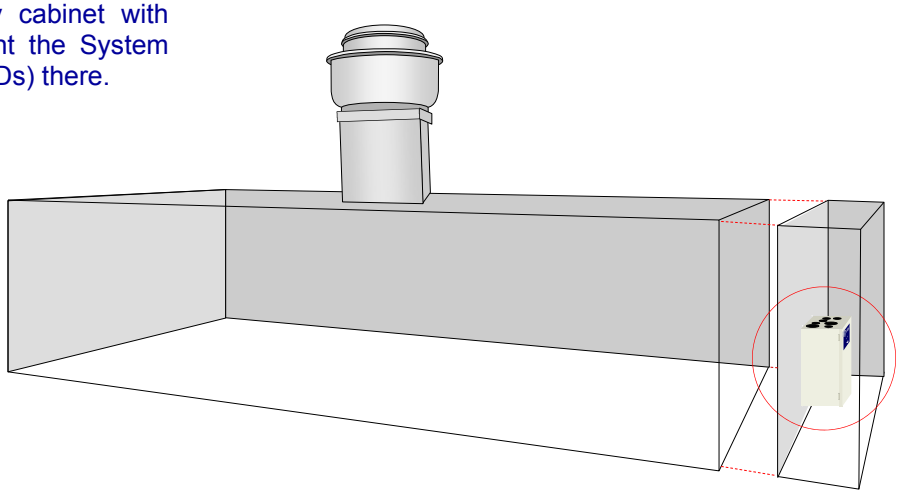

For retrofits, the System Controller is typically mounted above the hood. Select a location that is easily accessible and close to where the Touchpad will be mounted. Ideally, you should secure it to a wall. DO NOT PENETRATE THE HOOD EXHAUST PLENUM.

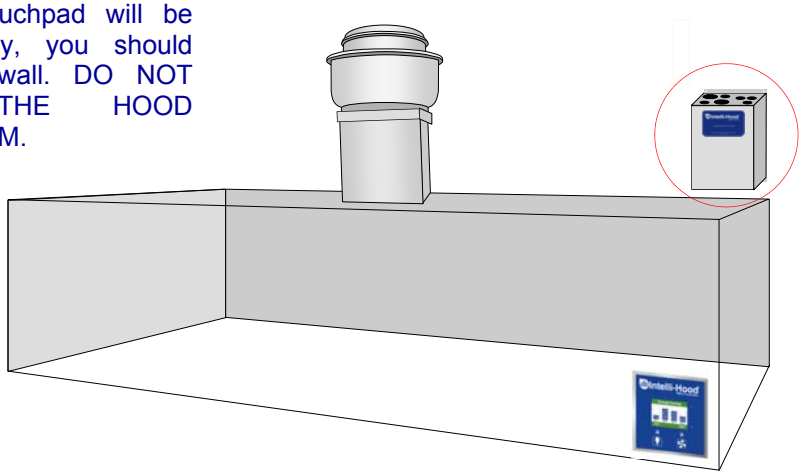

Intelli-Hood®

STEP 1

Install System Controller

B Turn Off Power Switch

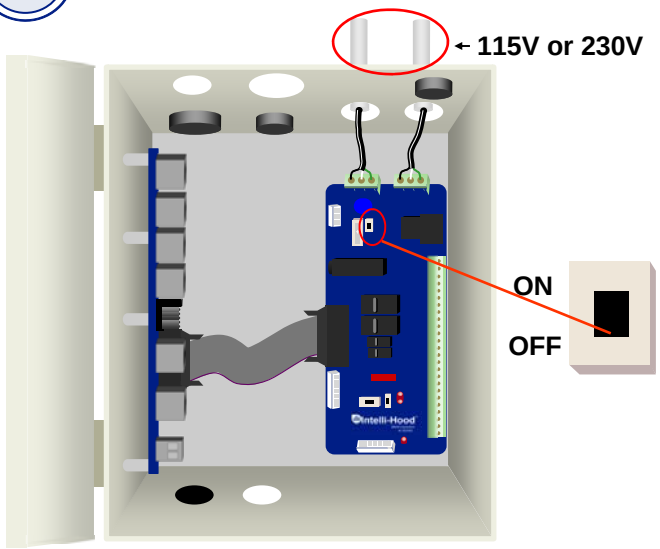

Turn OFF the System Controller power switch before wiring. Also turn off the breaker feeding this circuit.

C Wire System Controller

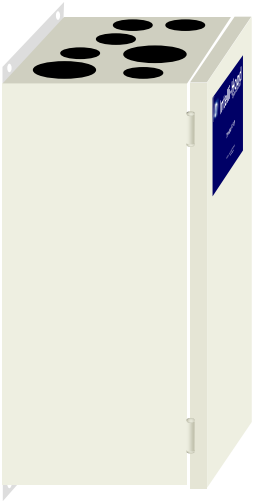

For both New Construction & Retrofits, wire the System Controller using the hood light circuit. The circuit must be 115V to 230V, at 50-60Hz. Maximum input current is 17A.

D Wire Connections Inside System Controller

115/230V
INPUT

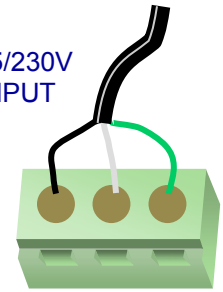

L N G

115/230V (15A)
LIGHTS (OUTPUT)

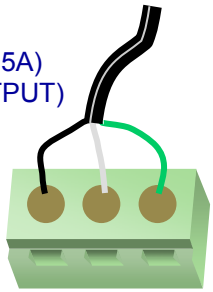

L N G

Wire gauge per NEC; allowable size range is 16AWG to 12AWG.

New Construction & Retrofits:
Main Input Power
from Hood Light Circuit
115-230 VAC @ 50/60Hz; 17A Max

New Construction:
Outgoing Power to Hood Lights
Output Voltage Matches Input
15 Amps max

Retrofits:
It is not required to use these output terminals if there are other provisions in place to control the hood lights. Note that output voltage will be the same as the input voltage.

Tungston Output Rating:
8A @ 120V
5.4A @ 240V

Intelli-Hood®

STEP 2

Install Variable Frequency Drive

A

Verify Variable Frequency Drive Wiring

For new construction, the Intelli-Hood includes a Variable Frequency Drive or VFD for each kitchen exhaust and make-up air fan. This type of starter is for use with 3-phase motors only. It not only turns the fans on and off, but also varies the speed of the motors by varying the output frequency and voltage. Therefore, you do not need a conventional magnetic motor starter with our system. **Caution**: If you have a tempered make-up air unit, then the control circuit for the heating system must be fed by a separate power source and NOT from the VFD! The output of the VFD must be wired to the motor ONLY and NOT to a transformer or any part of a control circuit!

If there is a make-up air unit, then the VFD for this unit must be interlocked with the fire suppression switch. This is typically done by using a shunt-trip breaker to power the System Controller so it loses power upon fire system activation, but it can also be accomplished on a per-drive basis by connecting a Normally Closed (NC) micro-switch contact on the fire suppression system directly to the drive on designated terminals (01 and 11 for Allen-Bradley and 10 and 16 for ABB). **Caution**: With variable frequency drives, there must be a separate conduit run for the output of each VFD (inputs may be run together if desired). If this is not done, there is a strong probability of problems due to line interference and inaccurate motor control.

For retrofits, the only difference between new construction and retrofits is that on retrofits you will already typically have conventional magnetic motor starters installed. In most cases, it is recommended that you install the VFD on the output side of the existing starters. This will enable the cooks/chefs to use the existing hood fan (and light) switch(es) and not have to change their habits. This will also allow you to keep the existing circuit intact between the magnetic starter for the make-up air unit and the fire suppression micro-switch. **Caution**: If there is an adjustable overload on the existing starter, it is strongly recommended that the overload be removed as these devices often prematurely trip when a VFD is on the circuit (even if the drive is on the load side).

All wiring must comply with the National Electric Code (NEC and local code requirements.

Intelli-Hood®

STEP

2 Install Variable Frequency Drive

B Select VFD Location

For retrofits, each VFD is typically mounted on the output side of the existing motor starter, which is often located in an electrical room, above the hoods, or inside a utility cabinet. **For new construction,** the hood manufacturer typically provides a utility cabinet in which to mount the VFDs.

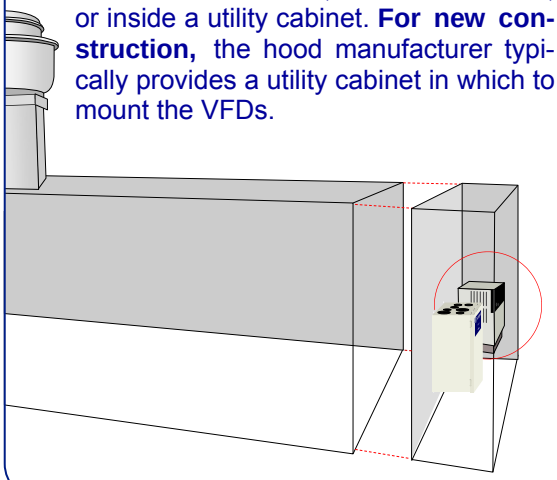

C Check VFD Location

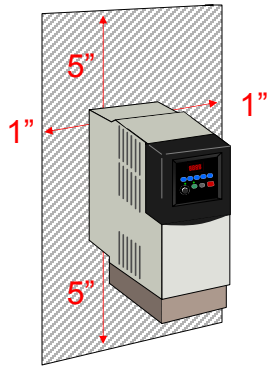

The location must be relatively free of dirt, grease, and water. The ambient temperature must be between +14 degrees F and +122 degrees F. There should be 5” of clearance on the top and bottom and 1” on the sides for adequate ventilation/cooling.

D Mount VFD

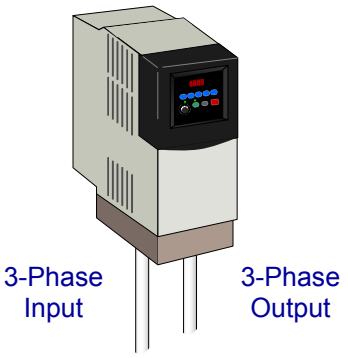

Mount each VFD with appropriate fasteners.

Then install separate conduit for the input and output power wiring to prevent electrical interference between the conductors.

E Wire VFD

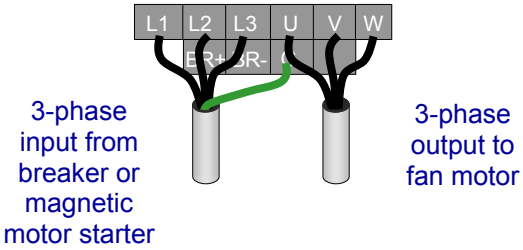

Remove the VFD top cover and connect the line voltage wiring to the VFD input power terminal block as shown above. Then connect the output power from the terminal block to the respective fan motor on the roof. The ground wire must be a minimum of 14 AWG and as short as possible. The output wiring for each VFD MUST be in a separate conduit run.

Intelli-Hood®

STEP 3

Install Touchpad

A Remove Existing Switches

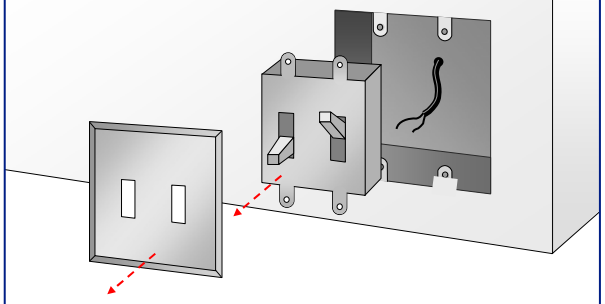

Before removing the switch cover plate, turn off the circuit breaker.

For retrofits, if you want to replace the existing fan and light switch with our Touchpad, remove these switches from the junction box. Then remove the existing wires to make room for the Touchpad Cable.

B Run Touchpad Cable

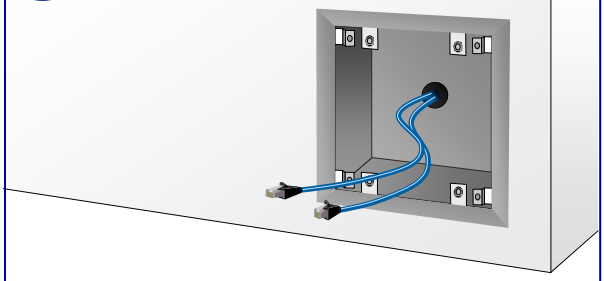

Run the Touchpad Cable inside the existing conduit and leave approximately 5 inches of slack inside the junction box. You will connect the other end of the Cable to the System Controller in Step 9.

C Plug In Cable

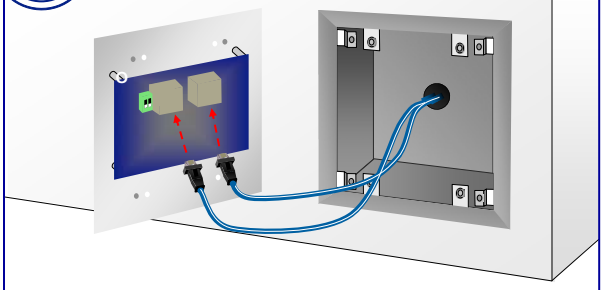

Plug the connector into the receptacle on the back of the Touchpad.

D Mount Touchpad

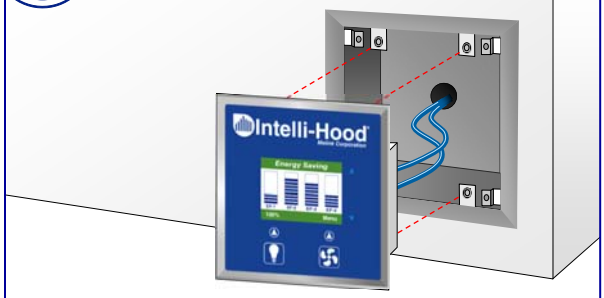

Mount the Touchpad to the junction box and secure the cover plate by snapping it on. Complete by applying silicone caulk to the outside edges to prevent liquid intrusion behind the cover plate.

Intelli-Hood®

ALTERNATE

3 Install Touchpad

A Install Surface Mount Box

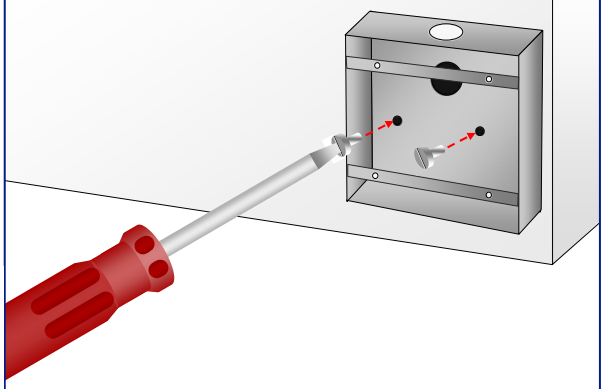

Install the Surface Mount box by attaching screws through the holes provided inside the box. If possible to bring cable in through the wall behind the box, first drill a 1" hole in the wall. If not, install 3/4" conduit stubbed up above the ceiling for the cable run.

B Run Touchpad Cable

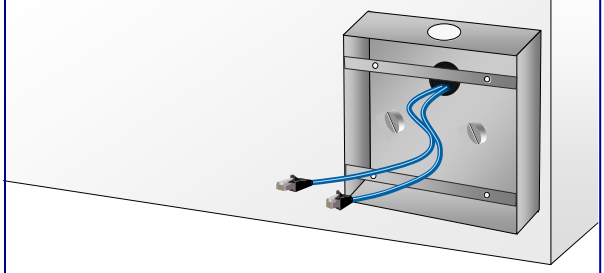

Run the Touchpad Cable inside the 3/4" conduit or through the back of the box and leave approximately 5 inches of slack inside the junction box. You will connect the other end of the Cable to the System Controller in Step 9. If another device will be installed downstream of the Touchpad, run two cables.

C Plug In Cables

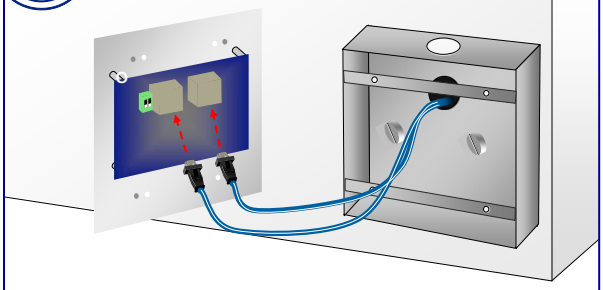

Plug the connector(s) into the receptacle on the back of the Touchpad.

D Mount Touchpad

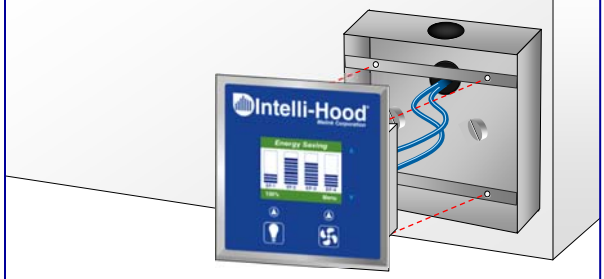

Mount the Touchpad to the junction box and secure the cover plate by snapping it on.

STEP 4

Install Exhaust Temperature Sensor

A Determine Number of Sensors

Install one (1) Temperature Sensor per exhaust duct, if the length of the duct is less than 24". In most cases this will mean one Temperature Sensor per hood.

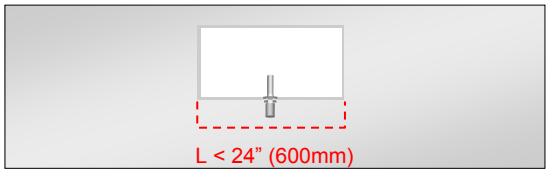

Hood 1 (Top View)

In some cases, this will mean two Temperature Sensors per hood.

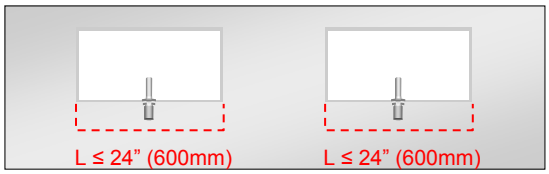

Hood 2 (Top View)

If the length of the duct is more than 24", then install two Temperature Sensors in order to obtain a better average reading.

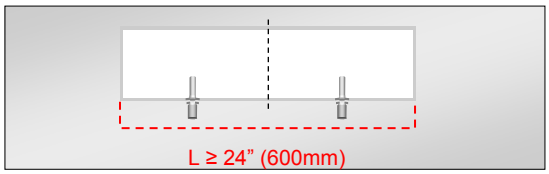

Hood 3 (Top View)

B Select Location for Mounting Sensor

Select a location for mounting each Temperature Sensor. The tip of the sensor should be inside the center of the duct to sense the average temperature. For most installations, proceed with steps C-F on page 10. An alternate mounting procedure is described in steps C-J on pages 11 and 12.

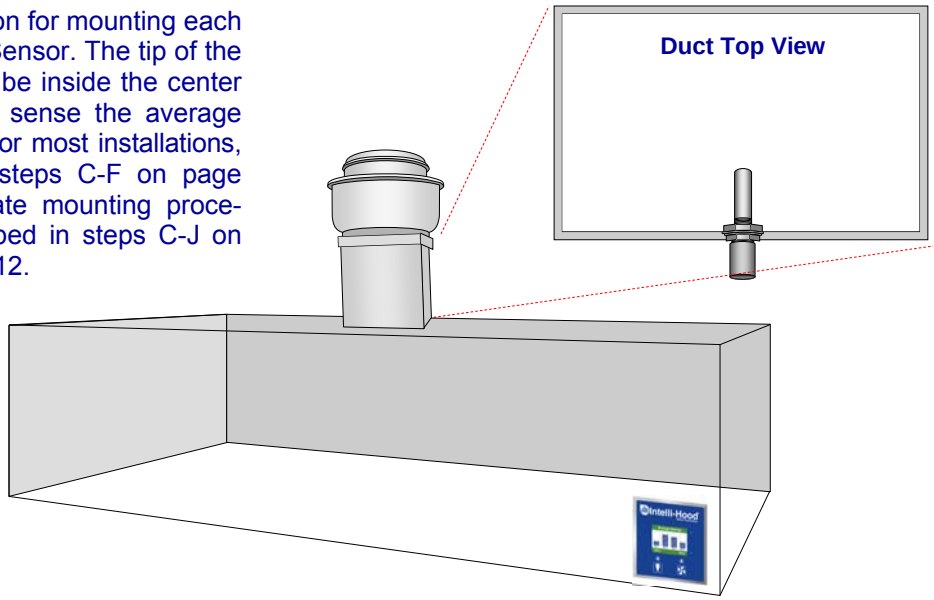

Intelli-Hood®

STEP 4

Install Exhaust Temperature Sensor

C Select Location on Duct

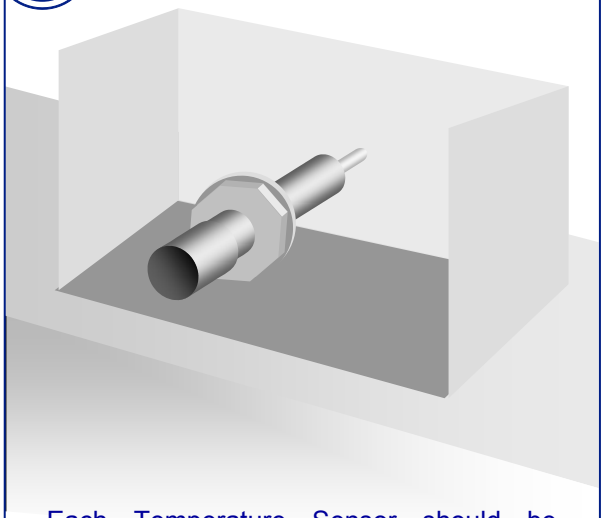

Each Temperature Sensor should be located as closely to the top of the hood as possible for easy access and cleaning.

D Side View of Sensor

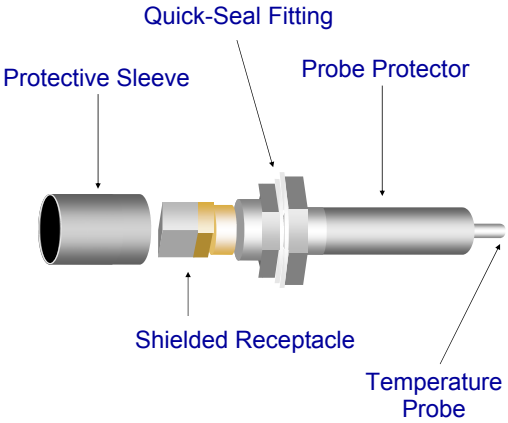

E Drill Hole in Duct

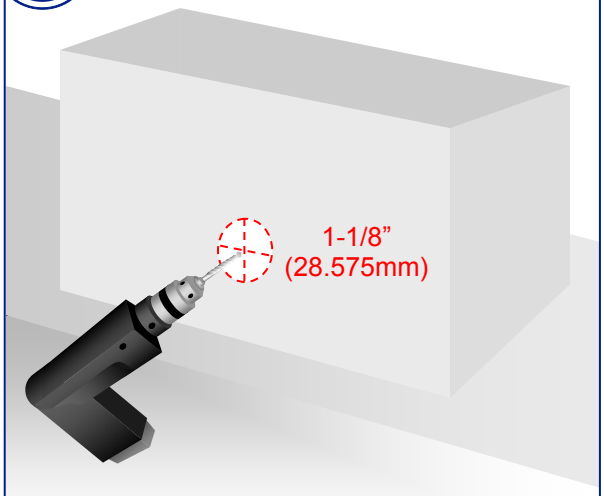

Drill or punch a 1-1/8” (28.575mm) diameter hole at the proper location for each Temperature Sensor.

F Mount Sensor

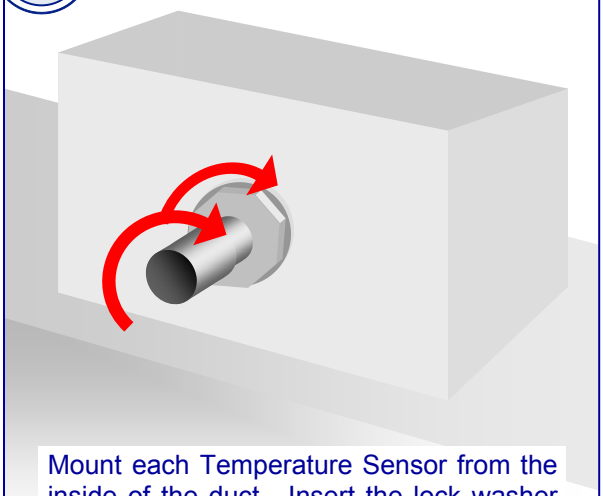

Mount each Temperature Sensor from the inside of the duct. Insert the lock washer and tighten the nut from the outside of the duct, then re-attach protective sleeve and strain relief.

Intelli-Hood®

ALTERNATE

4 Install Exhaust Temperature Sensor

A Insert Studs

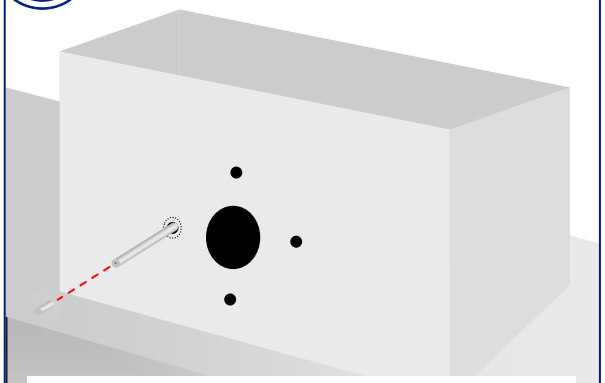

By reaching into the 2-1/4" hole, insert the stud into the 3/16" hole from inside the duct so that the threaded end is protruding outward. Tighten the wing nut onto the stud until its self-clenching base is securely wedged into the hole. Repeat this step for the other studs.

B Tighten Studs

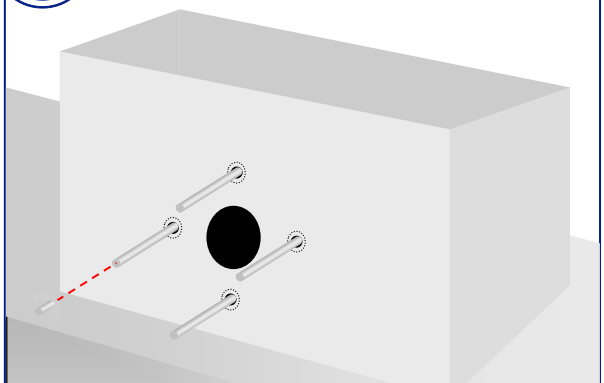

Remove wing nut from each stud. Check to be sure that all the studs are securely wedged into each hold. If any feel loose, re-tighten the wing nut onto the stud using a wrench. Remove all remaining wing nuts.

C Mount Sensor

Place the gasket over the studs, followed by the flange fitting. Tighten with the (4) wing nuts using an adjustable wrench until the unit is secure. Check around the seal to make sure the flange is sitting flush to the duct with no gaps.

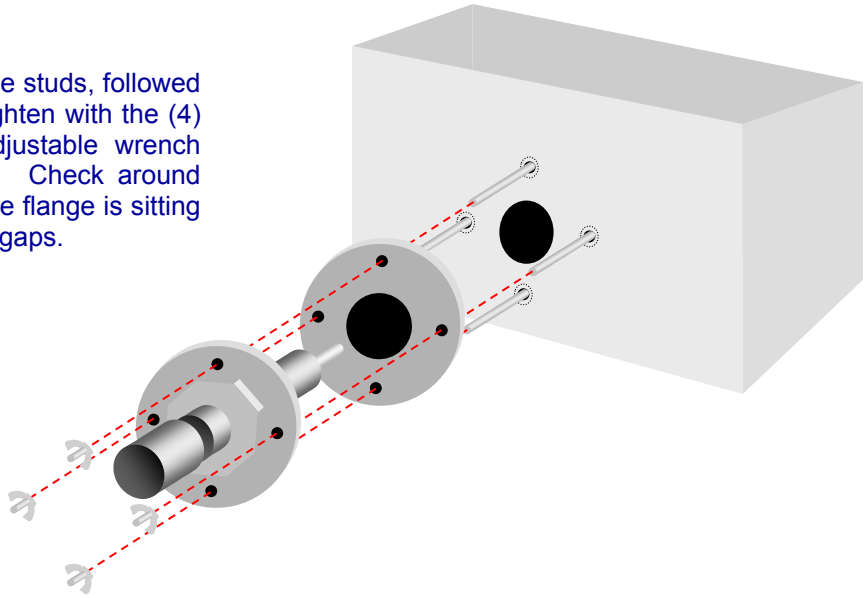

STEP 5

Install Canopy Sensor

A Determine Number of Sensors

Install one (1) Temperature Sensor per hood, if the length of the hood is less than 15'. In most cases this will mean one Temperature Sensor per hood.

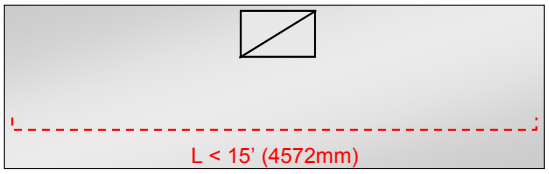

Hood 1 (Top View)

In some cases, this will mean two Temperature Sensors per hood.

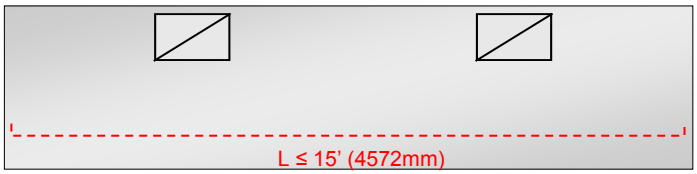

Hood 2 (Top View)

B Select Location for Mounting Sensor

Select a location for mounting each Temperature Sensor. For hoods <15', the sensor should be close to the center of the canopy. Be careful to avoid installing the sensor next to incandescent light bulbs as they can adversely affect accuracy of the sensor. Proceed with steps C-F on page 14.

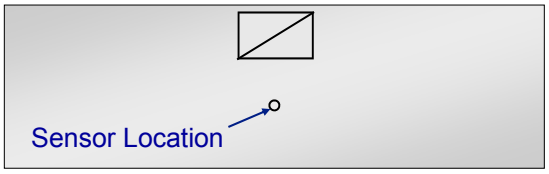

Intelli-Hood®

STEP 5

Install Canopy Sensor

C Select Location on Roof of Hood

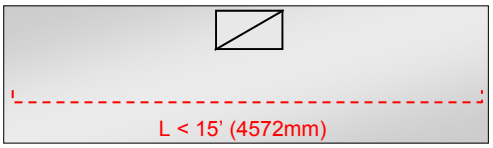

Hood 1 (Top View)

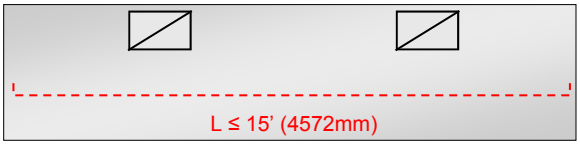

Hood 2 (Top View)

D Side View of Sensor

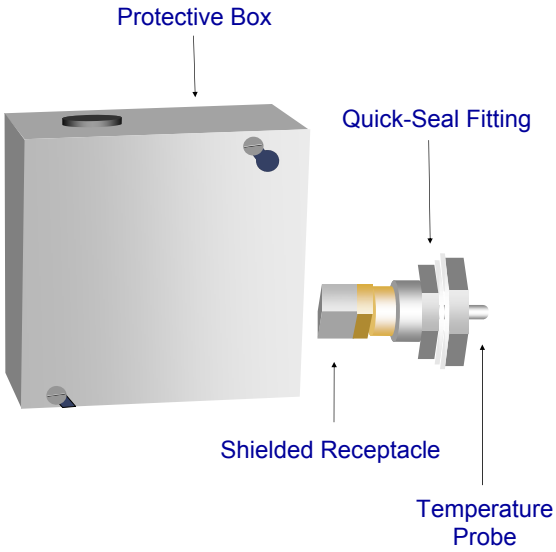

E Drill Hole in Roof of Hood

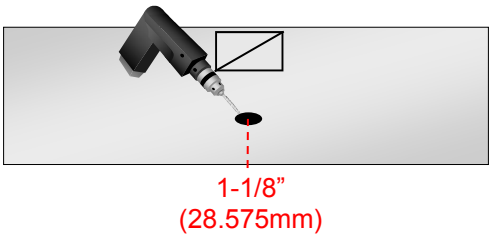

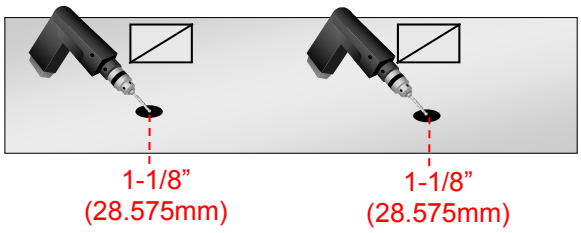

F Mount Sensor

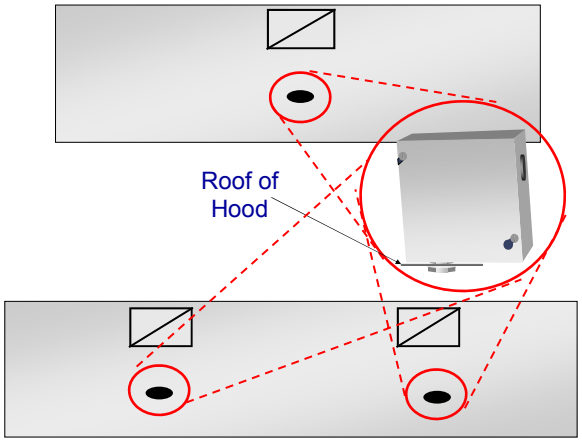

Intelli-Hood®

STEP 6

Install Hood Controllers

A Select Hood Controller Location

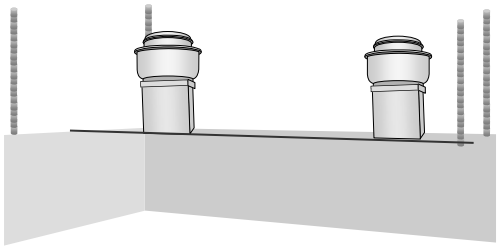

Select a location from the following four options for mounting each Hood Controller. The best way will vary based on conditions at each hood.

B Option 1: Secure Hood Controller to Standing Seam

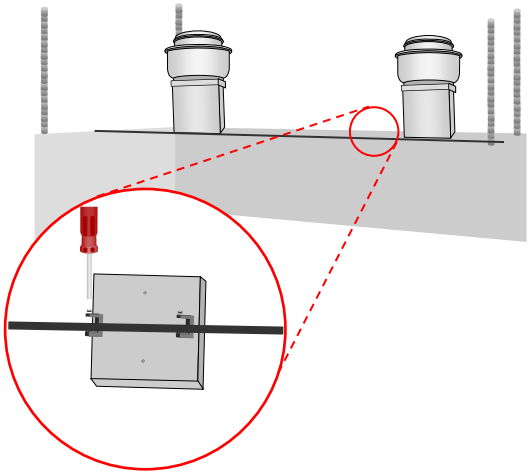

C Option 2: Secure Hood Controller to All-Thread

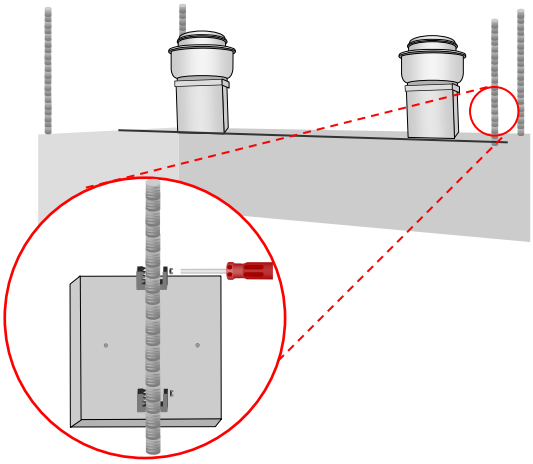

D Option 3: Secure Hood Controller By Bolting to Wall (Remove Clamps)

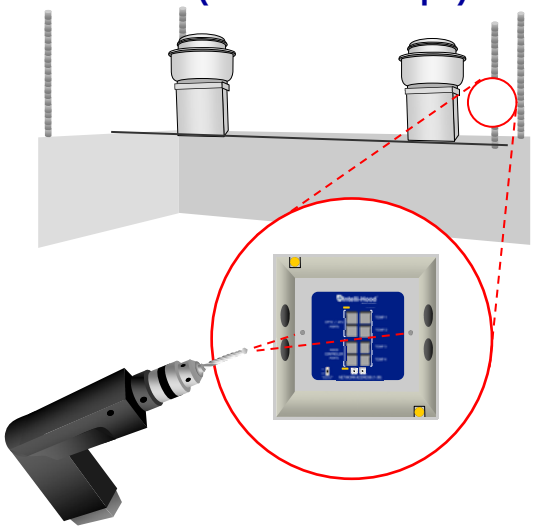

Intelli-Hood®

STEP 6

Install Hood Controllers

E Option 4: Secure Hood Controller with Pass-Thru Nipple to APU

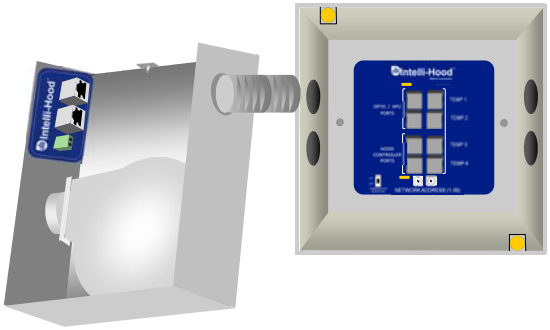

F Re-Attach Lid of Hood Controller

G Re-Attach Lid of Hood Controller

Intelli-Hood®

STEP 7

Install Optic Sensors

A Check Hood

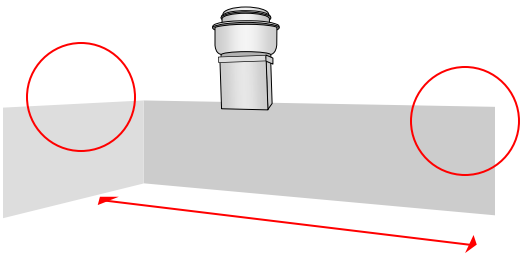

Make sure there are no obstructions at least 10" (254mm) from where you need to penetrate the top of the hood. Also, make sure the location will not cause the Optic Sensor beam to be obstructed by anything, such as fire suppression piping.

B Select Sensor Locations

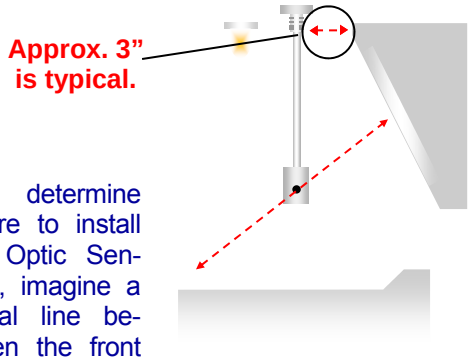

To determine where to install the Optic Sensors, imagine a virtual line between the front of the cooking surface and the middle of the hood filters. The Optic Sensors should be mounted along that virtual line inside the ends of the hood. (This is typically about 3" from where the fitter bank meets the top of the hood.) Also, the Optic Sensors must be mounted directly across from each other.

C Mark Hole Locations

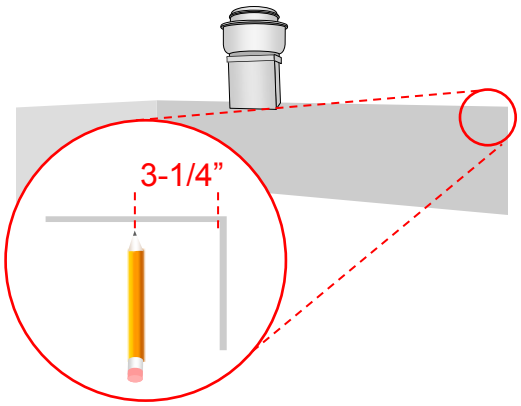

The hole locations need to be centered 3-1/4" (83 mm) from the **inside** ends of the hood. Drill a small pilot hole to mark these exact locations.

D Drill Holes in Hood

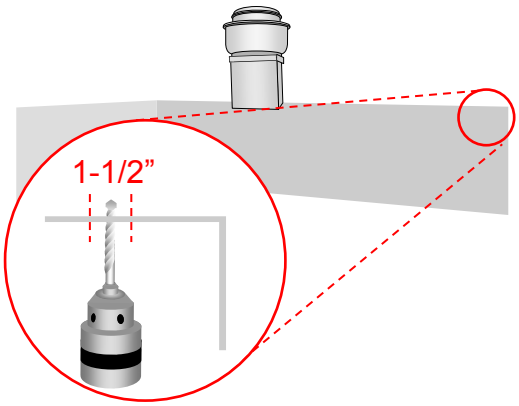

Then drill or punch a 1-1/2" (38mm) hole at these same locations.

STEP 7

Install Optic Sensors

E

Install Fittings

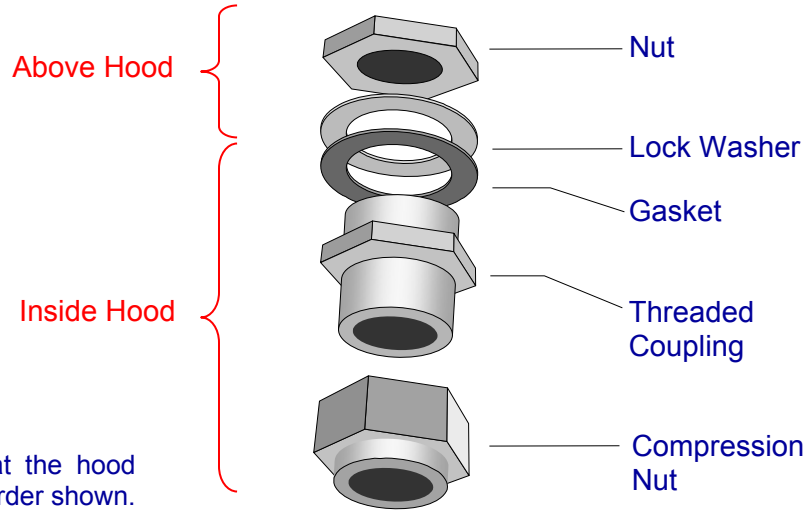

Install the Fittings at the hood penetrations in the order shown. Provided UL Listed fittings must be used.

F

Install Purge Pipes

Insert the Purge Pipes inside the Fittings with the notch positioned above the hood. Tighten the Fitting temporarily, until the Optic Sensors are mounted.

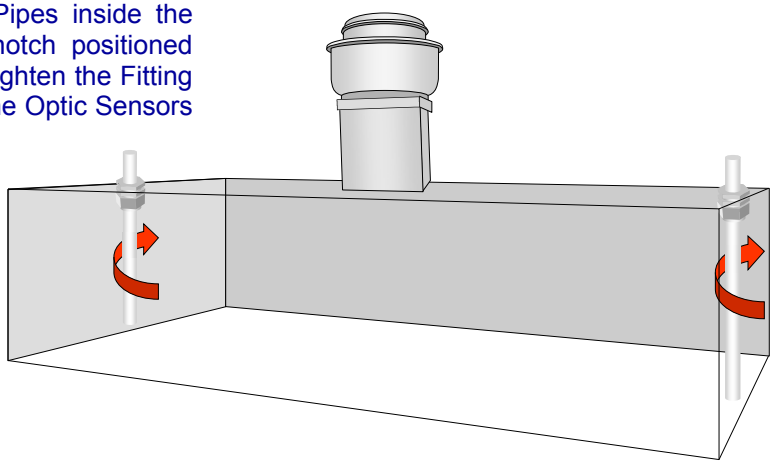

STEP 7

Install Optic Sensors (Optic Enclosures)

G Disengage Optic Sensors

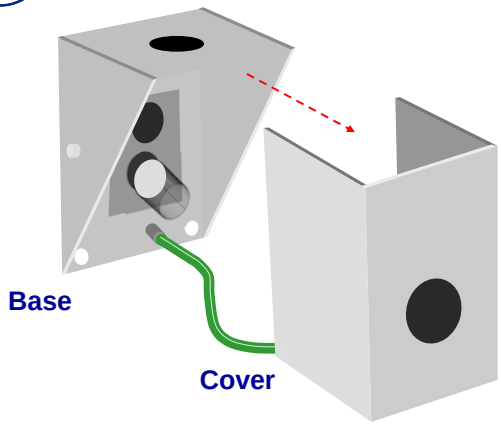

Disengage the cover from the base on each Optic Sensor. One has a circuit board labeled 'Emitter', and the other is labeled 'Receiver'.

H Mark Hole Locations

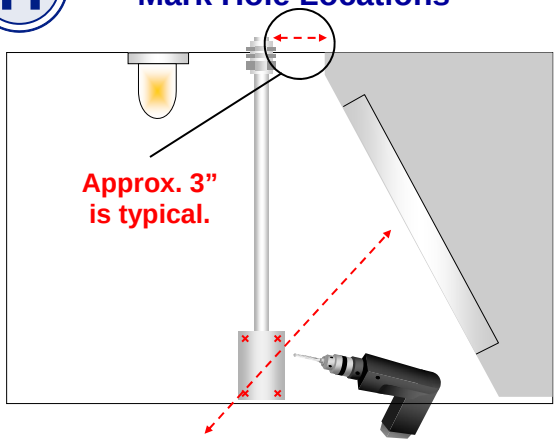

Use the base of each Optic Sensor as a template to mark the location for two mounting holes. Be sure to locate the Optic Sensor in the virtual line mentioned in step 5-B. Drill 3/16" holes.

J Mount Optic Sensor Base

Mount the base with two stainless steel screws. The screws can be located inside or outside of the hood, depending upon the location of the hood. If the hood is located against a wall, then self-tapping screws from the inside must be used. If the hood is not located against a wall, then use the machine screws, washers and nuts provided.

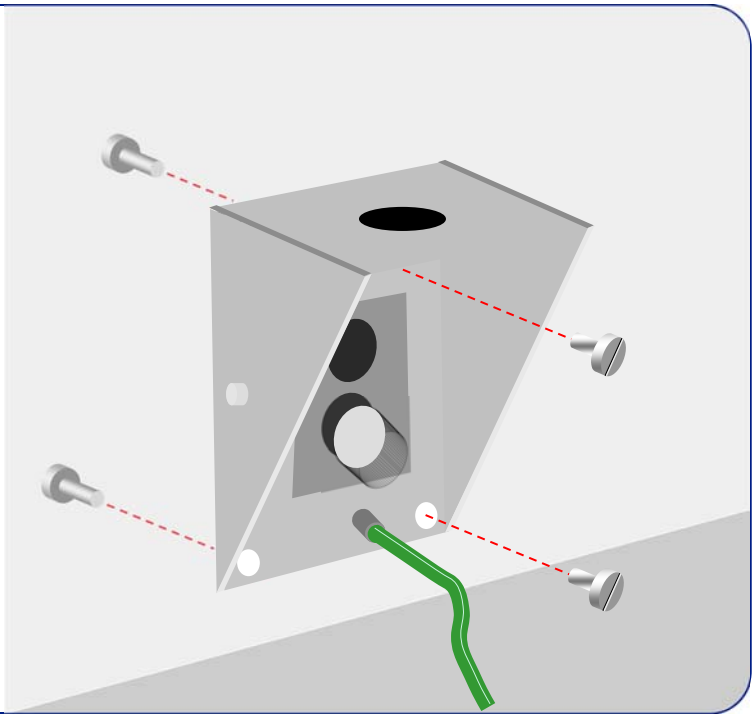

STEP 7

Install Optic Sensors

K

Install Optic Cables

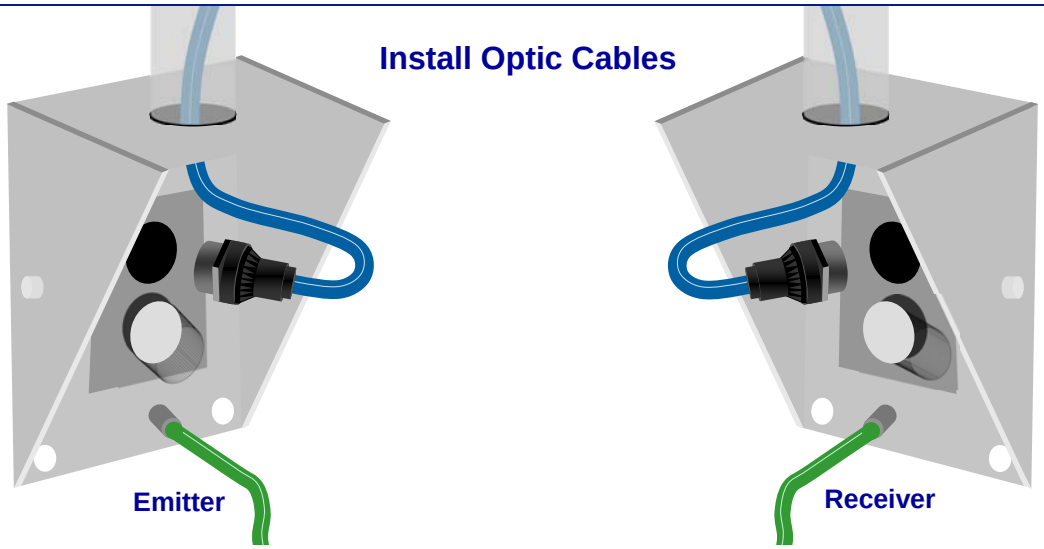

Remove the Optic Cables from the box. Insert the end of one cable with the small anti-snag boot up through the purge pipe from the optic housing with the Emitter Board. Plug in the cable end with the round connector and push any excess slack up the purge pipe. Mount the cover onto the base. Repeat with Receiver Board.

L

Run Cable Up Purge Pipes

Run the cables up each Purge Pipe and verify that they are located inside the notches before installing the APUs.

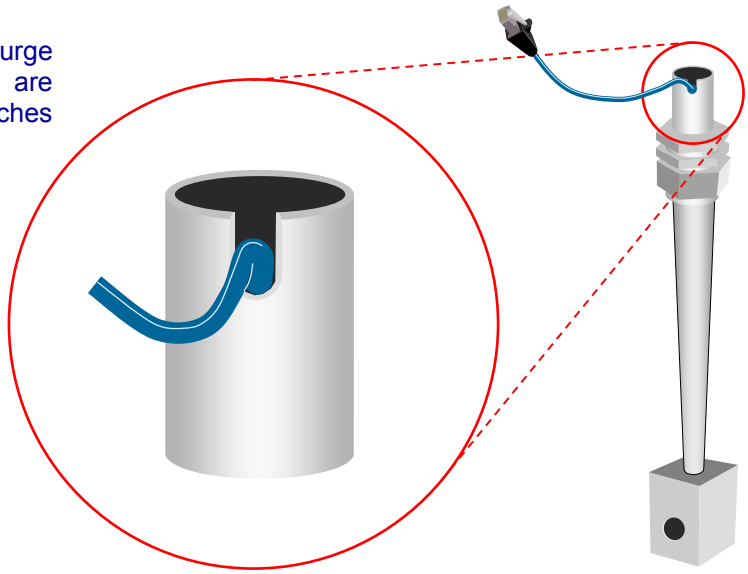

Intelli-Hood®

STEP 8

Install Air Purge Units

A Attach APU to Purge Pipe

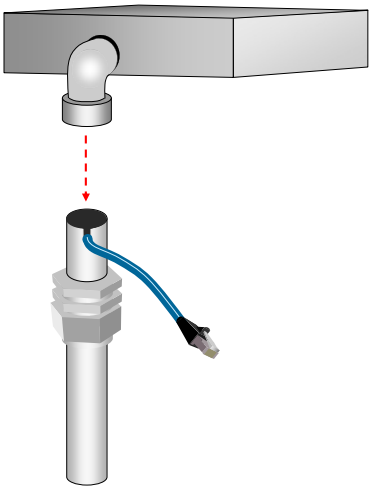

Attach an APU to each Purge Pipe and tighten the compression fitting.

B Remove APU lids

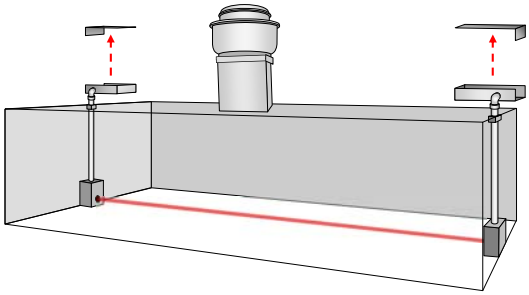

Remove the lids from each APU box to prepare for step 7.

C Plug In Optic Cables

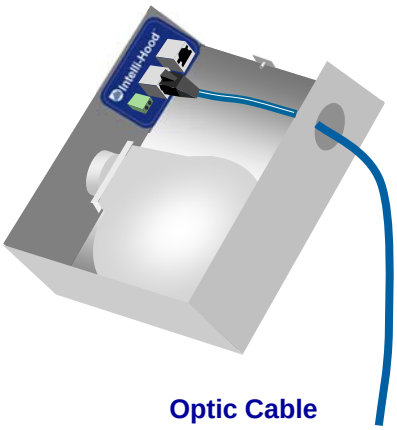

Plug the Optic Cables into either receptacle on the header board inside each APU.

Intelli-Hood®

STEP 9

Install Cables (Variable Frequency Drive)

A Plug Cable Into VFD

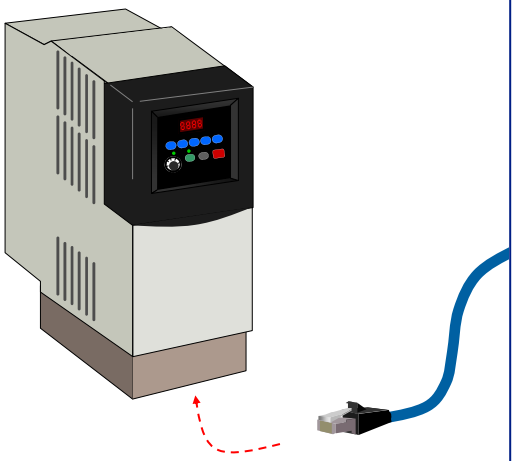

Remove a cable from its package and plug one end into the receptacle on the bottom of one VFD.

B Plug Into System Controller

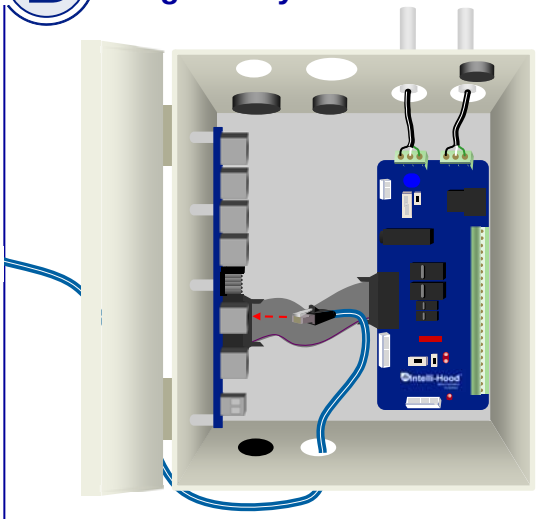

Then plug the other end of the cable into the receptacle marked 'VFD' on the side of the System Controller.

C Connect VFDs

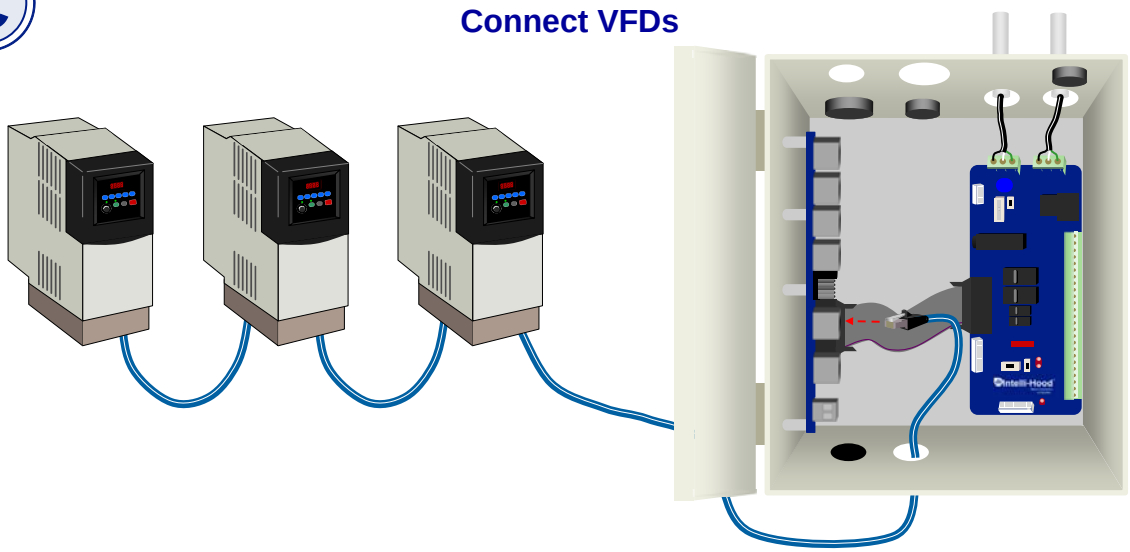

If you have multiple VFDs, plug the remaining VFDs to one another with additional cables, keeping only one VFD plugged to the System Controller.

STEP 9

Install Cables (Touchpad)

D Find Touchpad Cable

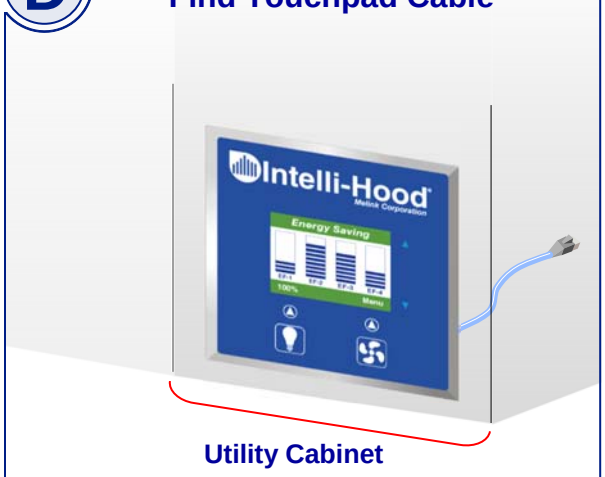

Inside the Utility Cabinet, take the Touchpad Cable already connected on one end ...

E Plug Into System Controller

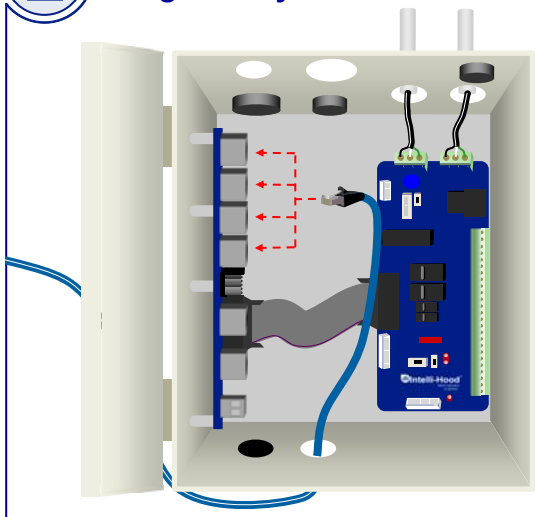

...and run it to the System Controller on the other side of the cabinet.

F Plug Touchpad Cable into Hood Controller

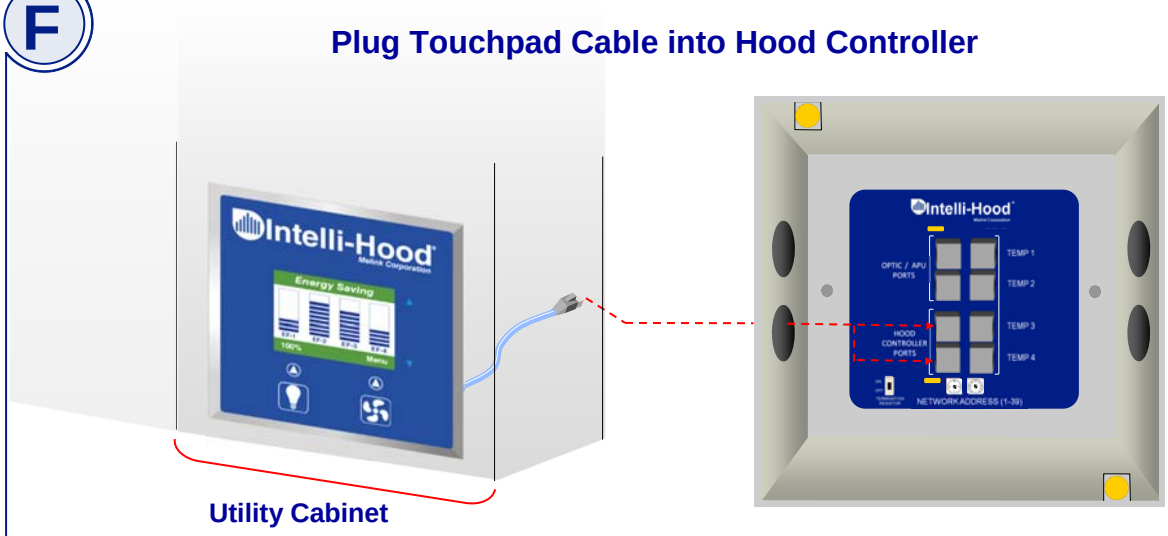

STEP 9

Install Cables (Temperature Sensor)

G

Plug Cable into Temperature Sensor

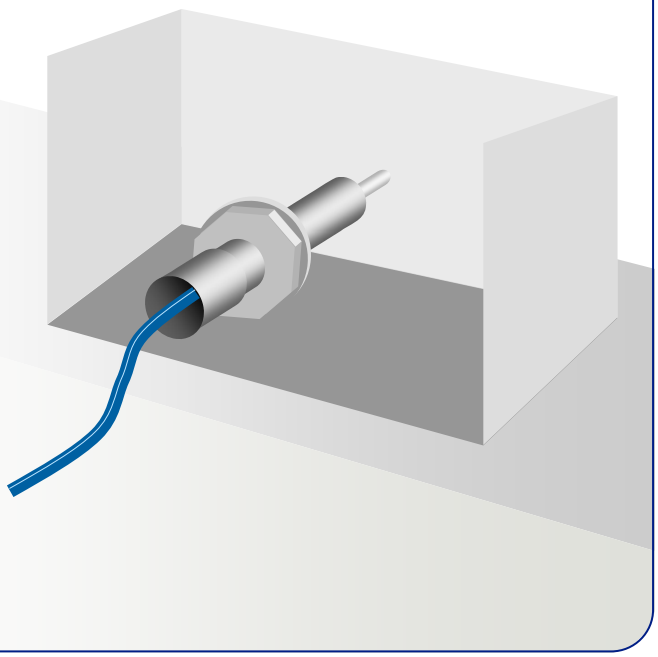

Remove the Temperature Cable from its package. Connect one end to the Temperature Sensor receptacle.

H

Plug Into Hood Controller

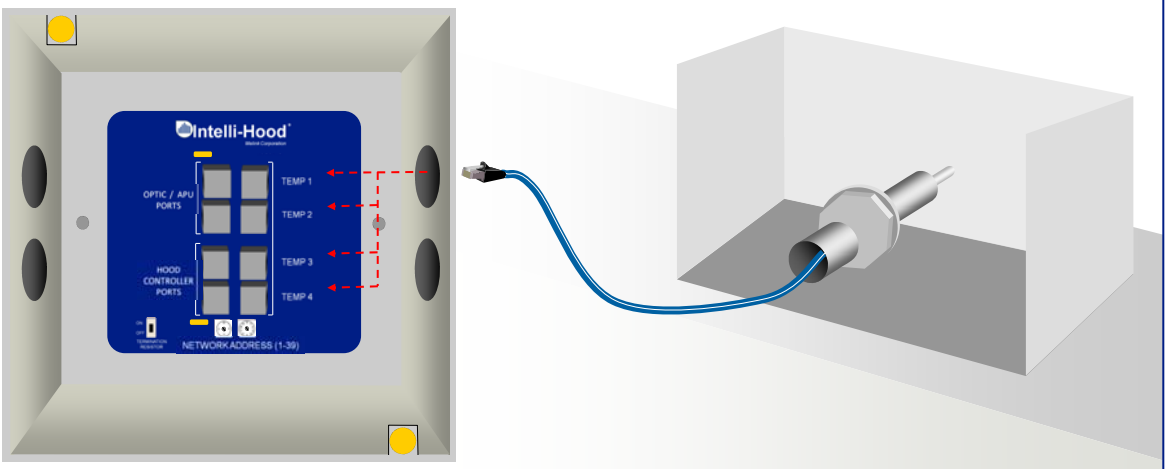

Connect the other end of the cable into a Temp port on the Hood Controller. Make sure to note which port each sensor is plugged into as they will be assigned via programming.

STEP 9

Install Cables (Hood Controller)

J Plug Into Hood Controller

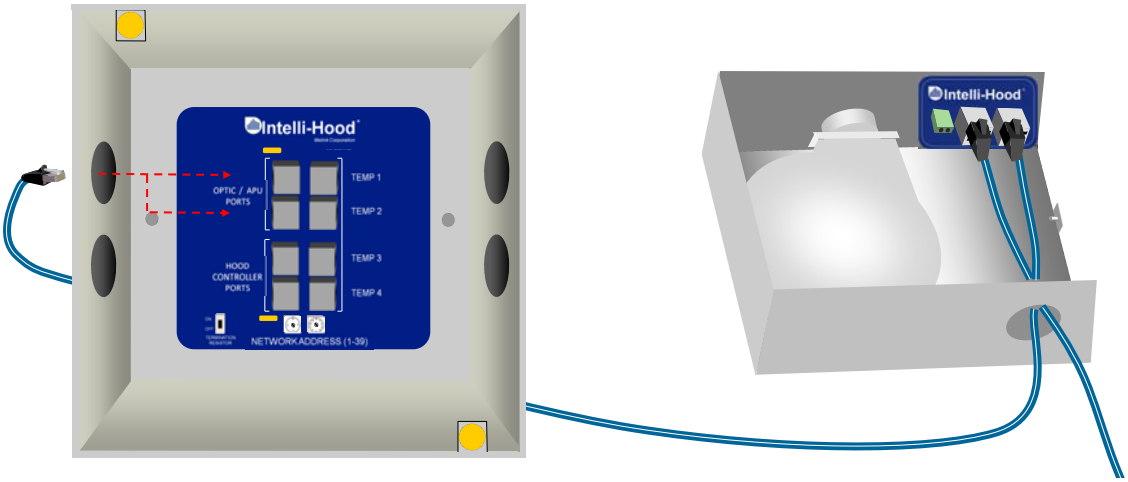

When optics are being used, plug a cable in between each APU box and the Optic /APU Ports on the Hood Controller...

K Secure APU Lid

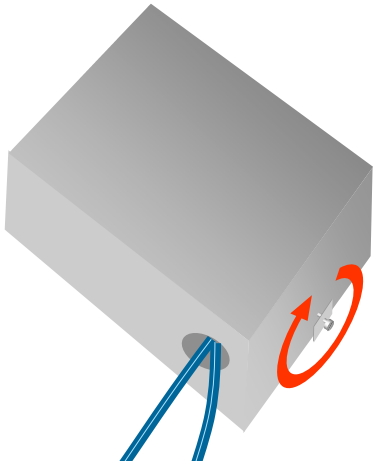

...then replace the lid on the APU and tighten the thumbscrew. Repeat steps A-D for remaining hoods.

L

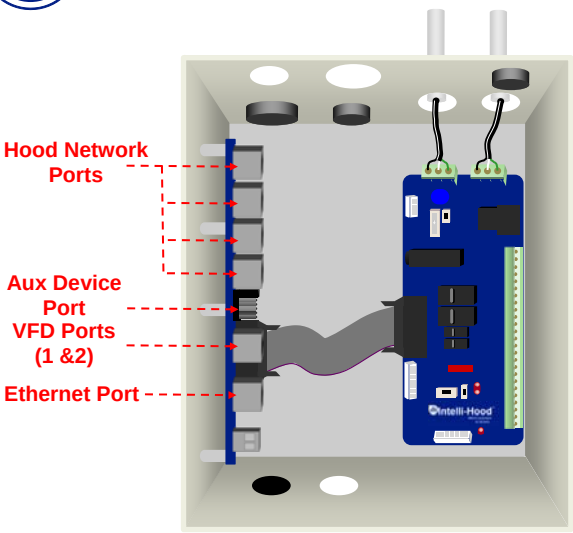

STEP 9

Install Cables (Hood Controller)

M

Possible Hood Layout

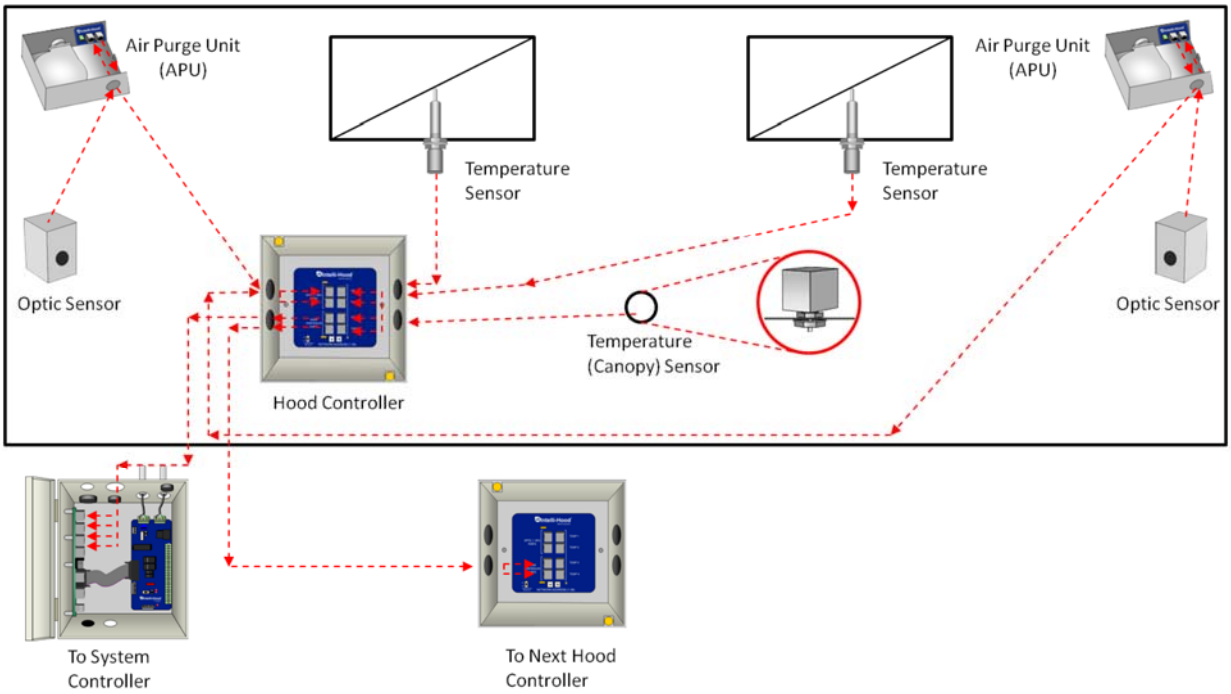

For each Hood Controller, the following sensors may be connected:

- One set of Optic Sensors
- Four Temperature Sensors (Programmable options for each sensor include Exhaust Duct, Hood Canopy, Supply Air, or Kitchen Space.)

The Hood Network has different types of devices. Refer to the Submittal and Technical Overview Document for general information regarding each of these devices. A System Controller can have several devices of each type connected to it. The possible quantities of each device are listed below.

Device	Max Unassisted Single Port Capacity	Max Unassisted System Controller (SC) Capacity	Max Unassisted System Controller Lite (SC-L) Capacity
Hood Controller (HC)	2	8	4
Touchpad (TP)	2	8	4

STEP 9 Install Cables (Hood Controller)

N

Connect Hood Controllers

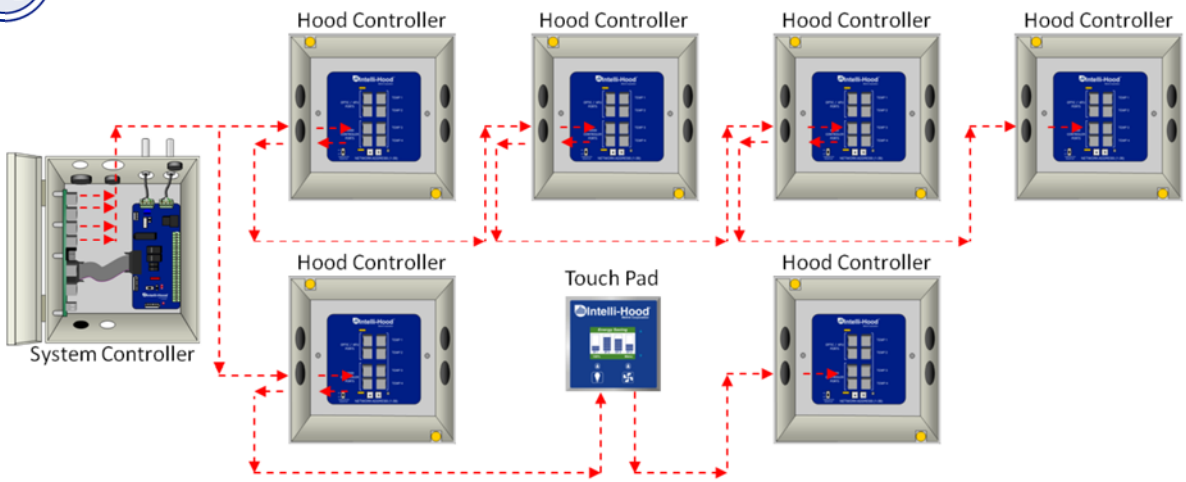

The System Controller has a limited amount of power output capacity with the included power supply. Up to (8) Hood Controllers with Optics* may be connected across the four Hood Network ports. Also, each Hood Network Port is power/current-limited. Cable length must be taken into account when connecting the Hood Controller Network strings. The following table indicates the allowable load based on maximum cable distance to the respective Hood Network Port.

* NOTE: Lite Model System Controllers have (2) Hood Network Ports and a maximum capacity of (4) Hood Controllers

Max Number of Hood Controllers with Optics in Hood Network String	Allowable total cable distance from the System Controller to the last Hood Network device
1	450 feet
2	200 feet

Recommended Wiring Practices

- Order Hood Controllers so that the lowest Hood Controller addresses are connected to Hood Network Port 1, then Port 2, etc.
- The Touchpad should be the first device in the string from the System Controller.
- When possible, isolate the Touchpad on its own port (simplifies Troubleshooting).
- Last device in each Hood Network String should have the termination resistor switched to ON.
- All wiring is restricted to same room.

Intelli-Hood®

STEP 10

Setting Addresses

A Hood Controllers

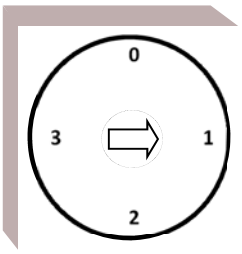

10s Position

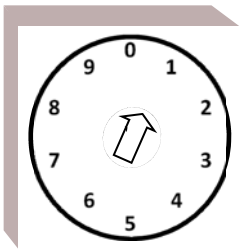

1s Position

Set the Hood Controller address by setting the 10s and 1s address switches respectively. Each Hood Controller must have a unique address.

B Touchpad

Set the Touchpad address through the Configuration Menu. See Operations manual for details. Each Touchpad must have a unique address.

C Aux Touchpad, Aux Lighting Controller, Aux Power Supply

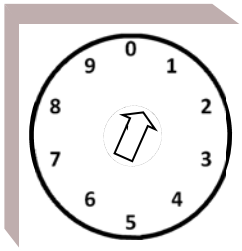

Set the address for the Aux Touchpad, Lighting Controller, and Power Supply by setting their respective rotary switches. Each device must have an address unique to its type. For example, an Aux Touchpad and Aux Lighting Controller can both be address 1, but two Aux Touchpads cannot be address 1.

D Termination Resistor

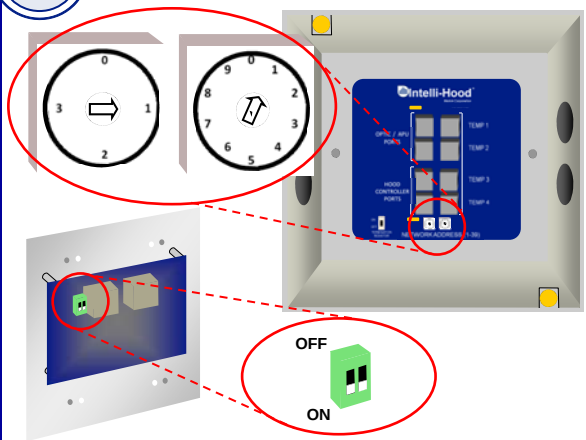

Set the Termination resistor to ON for the last device plugged into each Hood Network String. WARNING: DO NOT TURN ON ALL TERMINATION RESISTORS IN THE STRING OR THE COMMUNICATIONS WILL NOT WORK PROPERLY.

STEP 11

Field Wiring

A System Controller (Model SC)

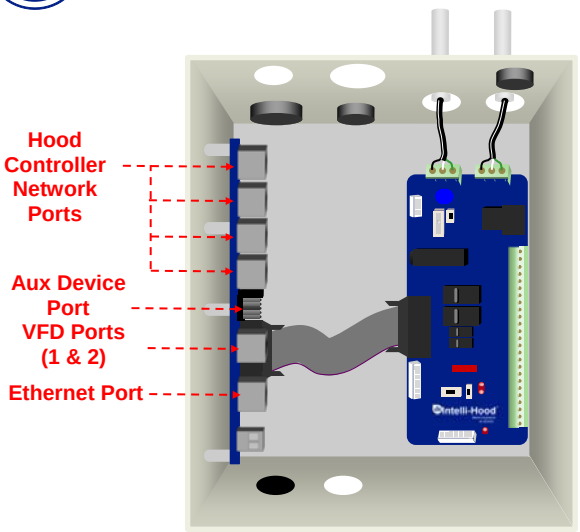

The Model SC has (4) Hood Controller Network Ports, (1) Aux Device Port, (2) VFD Ports, and (1) Ethernet Port

B System Controller Lite (Model SC-L)

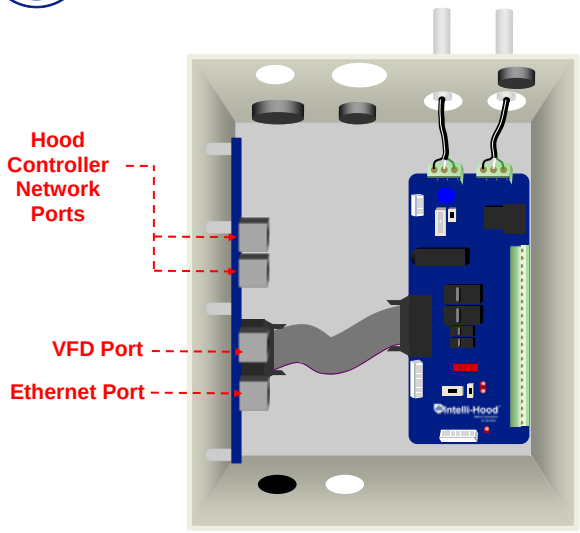

The Model SC-L has (2) Hood Controller Network Ports, (1) VFD Port, and (1) Ethernet Port

OPTION 1

Fire Suppression Switch

A

Connect Fire Suppression Switch to VFD

If you installed an Electronic Motor Starter for a make-up air or supply fan, then you will need to make sure it is interlocked with the fire suppression system. The purpose is to make sure that this fan shuts down in the event of a fire. This is accomplished by running the VFD on/off control signal to the fire suppression micro-switch. If/when this normally closed (N.C.) switch opens, the VFD shuts down power to the fan.

Connect your Ansul micro-switch to terminals 01 and 04 of the VFD.

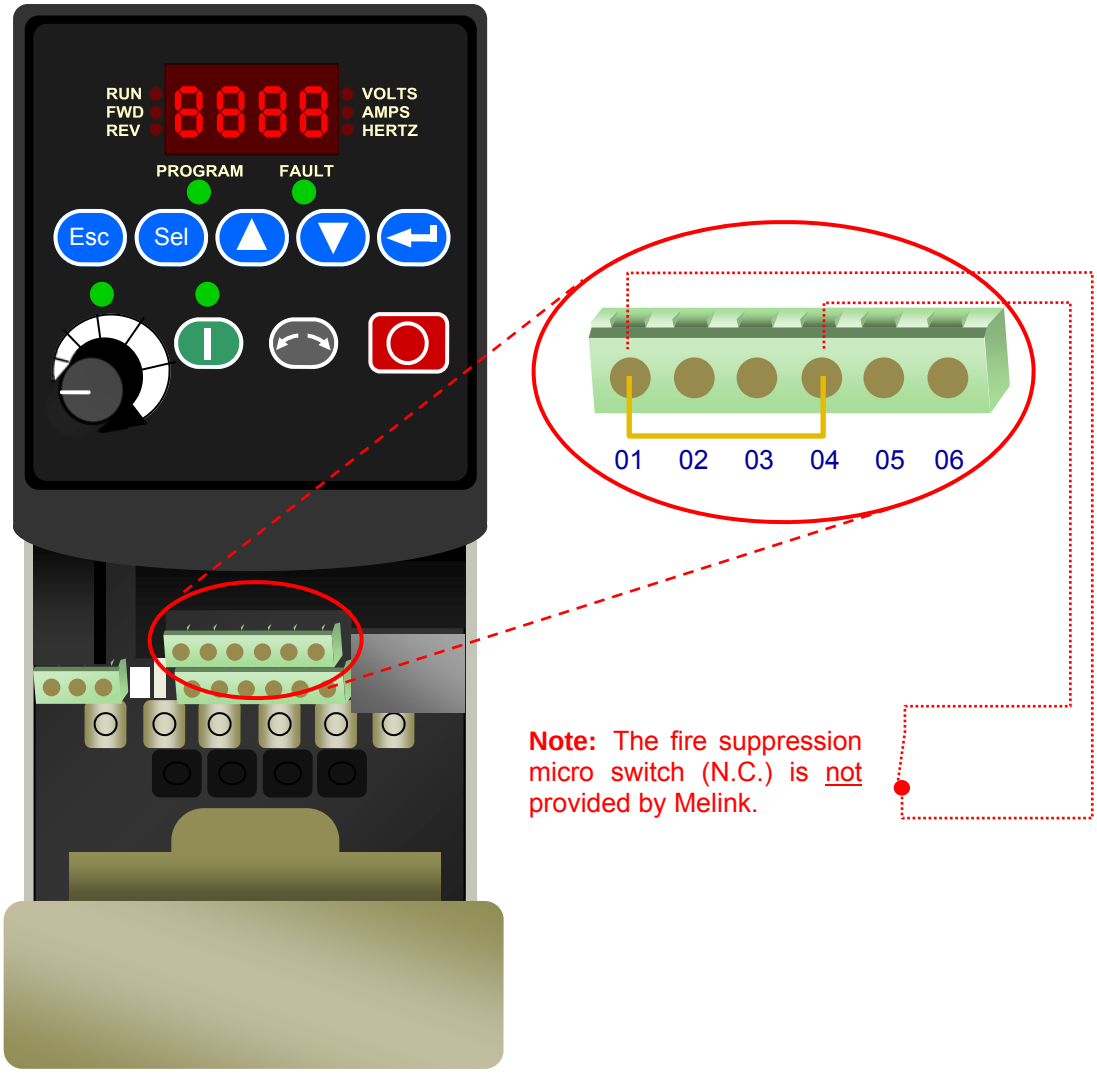

Note: The fire suppression micro switch (N.C.) is not provided by Melink.

Intelli-Hood®

OPTION 2

Install Supply Temperature Sensor

A Install Temperature Sensor

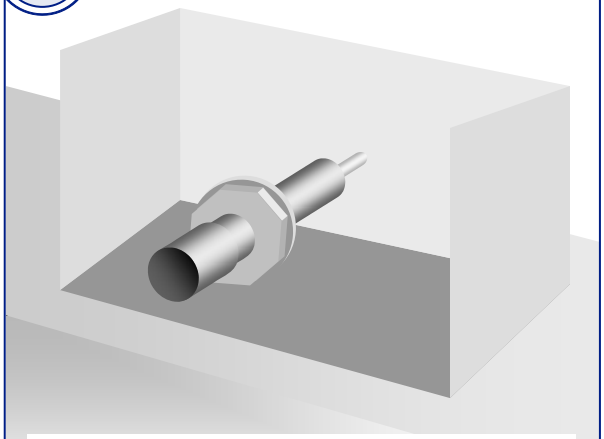

Install the Supply Temperature Sensor in the make-up air duct using one of the two mounting procedures shown in Step 4. **Note:** You only need to install one Supply Temperature Sensor in any given store.

B Plug Cable Into the Hood Controller

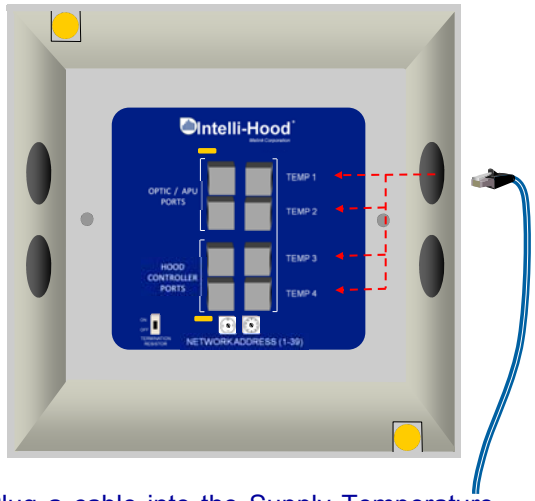

Plug a cable into the Supply Temperature receptacle of the Hood Controller.

C Plug Cable Into Temperature Sensor

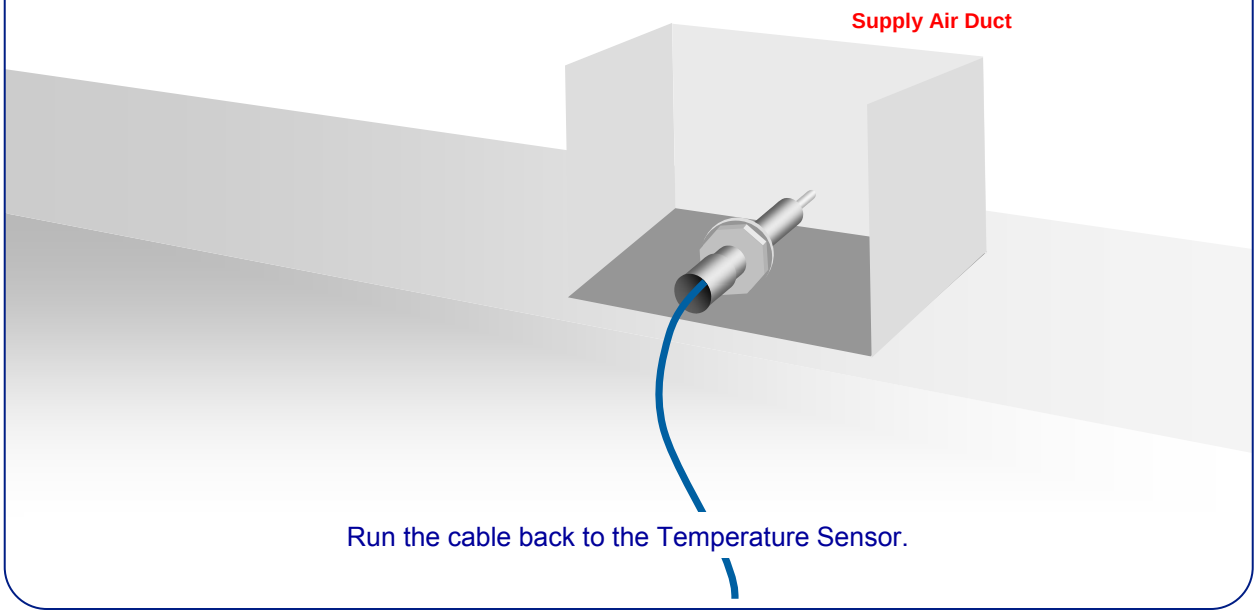

Run the cable back to the Temperature Sensor.

Intelli-Hood®

OPTION 3

Install Kitchen Temperature Sensor

A Select Suitable Location

The Kitchen Temperature Sensor must be located away from any hot or cold spots. (such as above a kitchen appliance or underneath a ceiling diffuser). Choose a location that best represents the average temperature of the kitchen.

B Attach Base to Wall

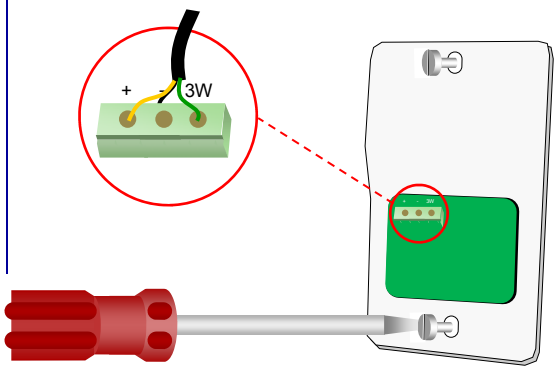

Detach the base from the cover and secure it to the selected location on the wall. Connect one end of the cable to the terminal block on the base as shown.

C Connect Cable to Hood Controller

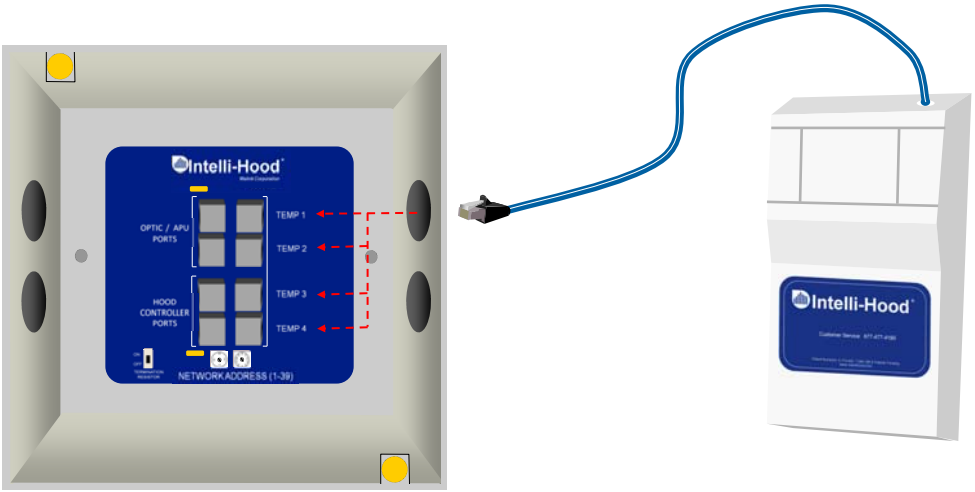

Connect the other end of the cable to one of the temperature ports inside the Hood Controller.

Intelli-Hood®

OPTION 4

Install Aux Touchpad

A Remove Existing Switches

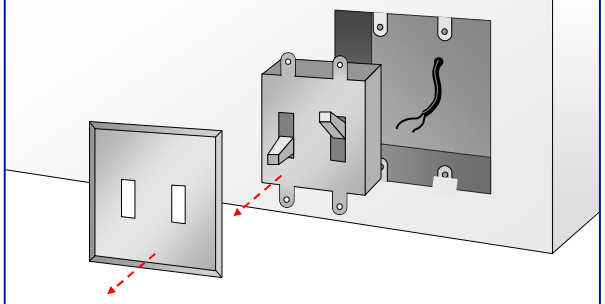

Before removing the switch cover plate, turn off the circuit breaker.

For retrofits, if you want to replace the existing fan and light switch with our Touchpad, remove these switches from the junction box. Then remove the existing wires to make room for the Touchpad Cable.

B Run Touchpad Cable

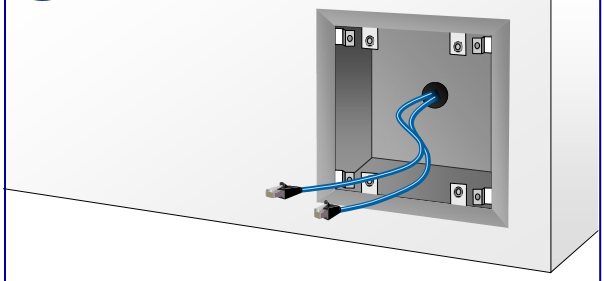

Run the Touchpad Cable inside the existing conduit and leave approximately 5 inches of slack inside the junction box. You will connect the other end of the Cable to the System Controller in Step 9.

C Plug In Cable

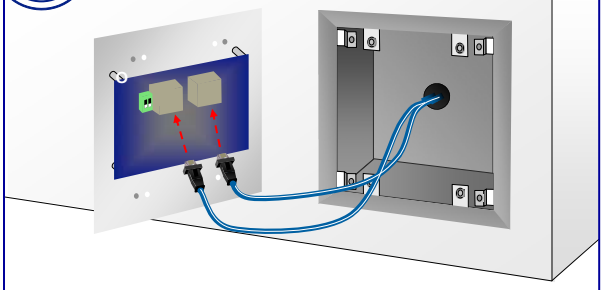

Plug the connector into the receptacle on the back of the Touchpad.

D Mount Touchpad

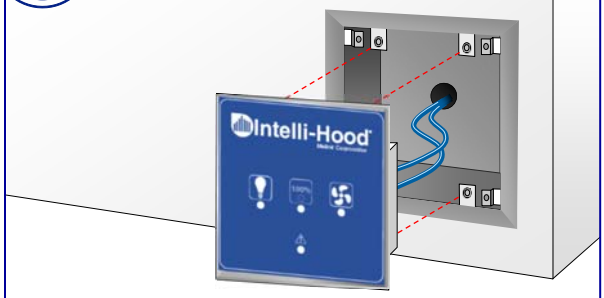

Mount the Touchpad to the junction box and secure the cover plate by snapping it on. Complete by applying silicone caulk to the outside edges to prevent liquid intrusion behind the cover plate.

Intelli-Hood®

ALTERNATE

4 Install Aux Touchpad

A Install Surface Mount Box

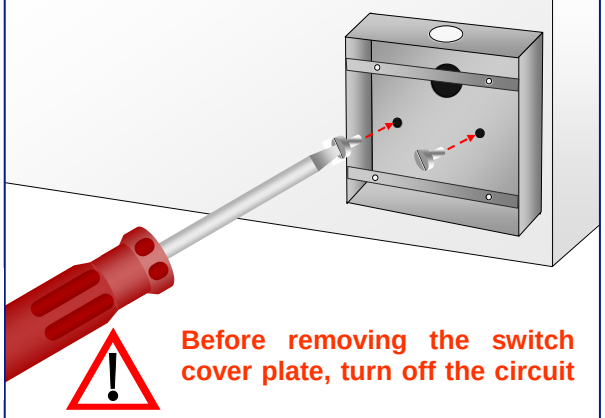

Before removing the switch cover plate, turn off the circuit

For retrofits, if you want to replace the existing fan and light switch with our Touchpad, remove these switches from the junction box. Then remove the existing wires to make room for the Touchpad Cable.

B Run Touchpad Cable

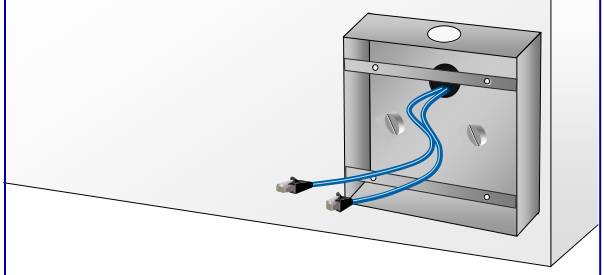

Run the Touchpad Cable inside the existing conduit and leave approximately 5 inches of slack inside the junction box. You will connect the other end of the Cable to the System Controller in Step 9.

C Plug In Cables

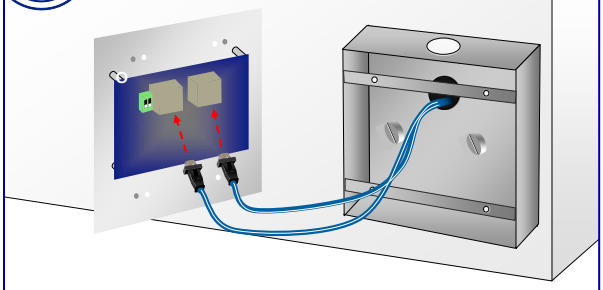

Plug the connector into the receptacle on the back of the Touchpad.

D Mount Touchpad

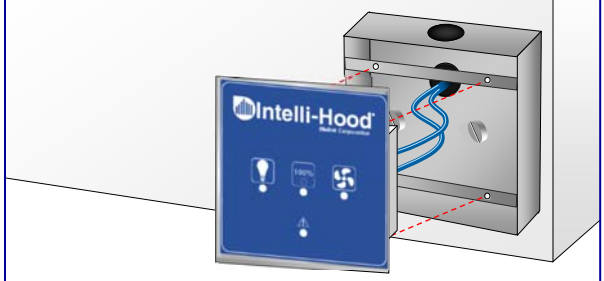

Mount the Touchpad to the junction box and secure the cover plate by snapping it on.

APPENDIX A

Typical Drawing

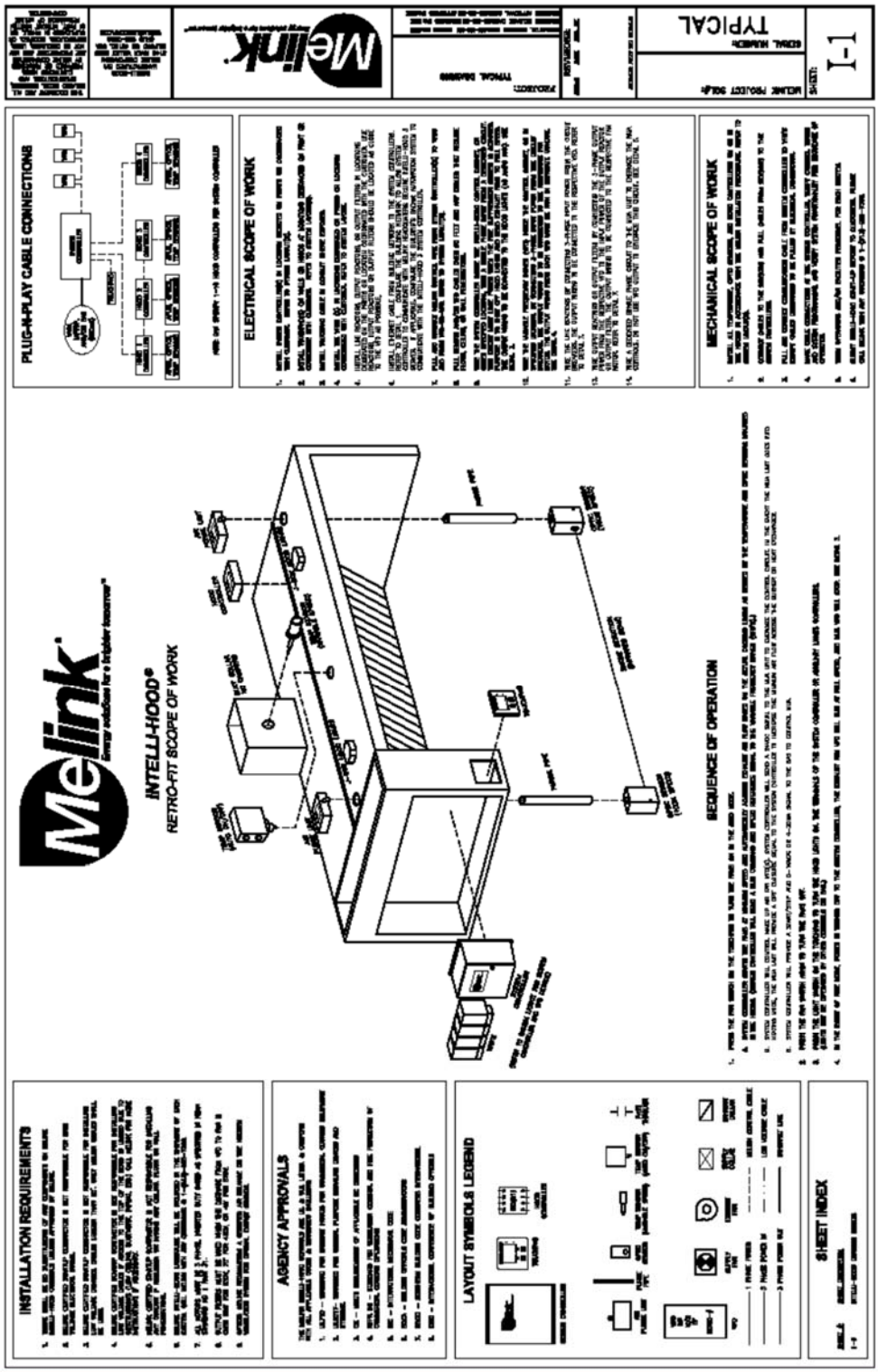

APPENDIX A

Typical Drawing

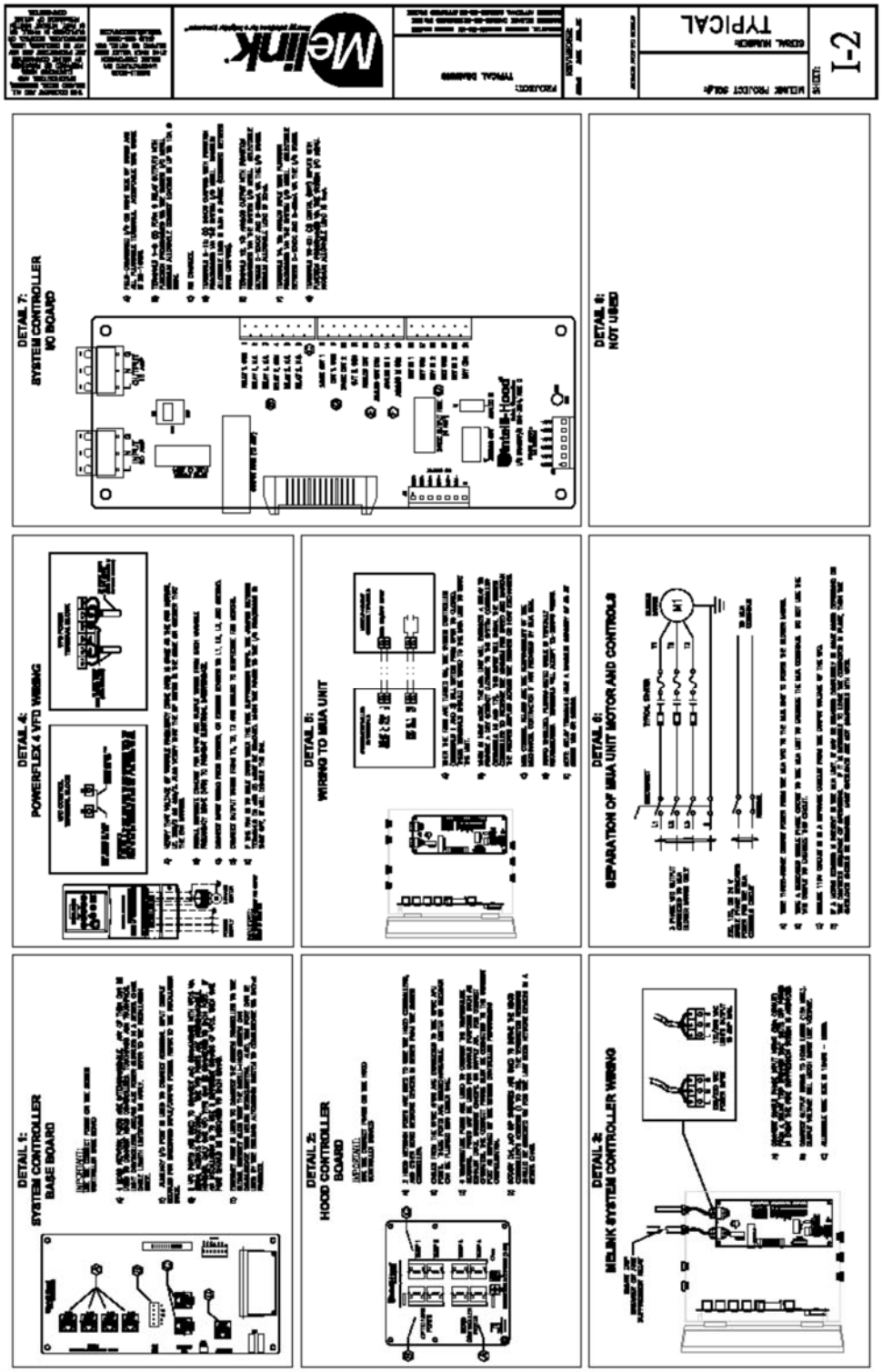

APPENDIX A

Typical Drawing

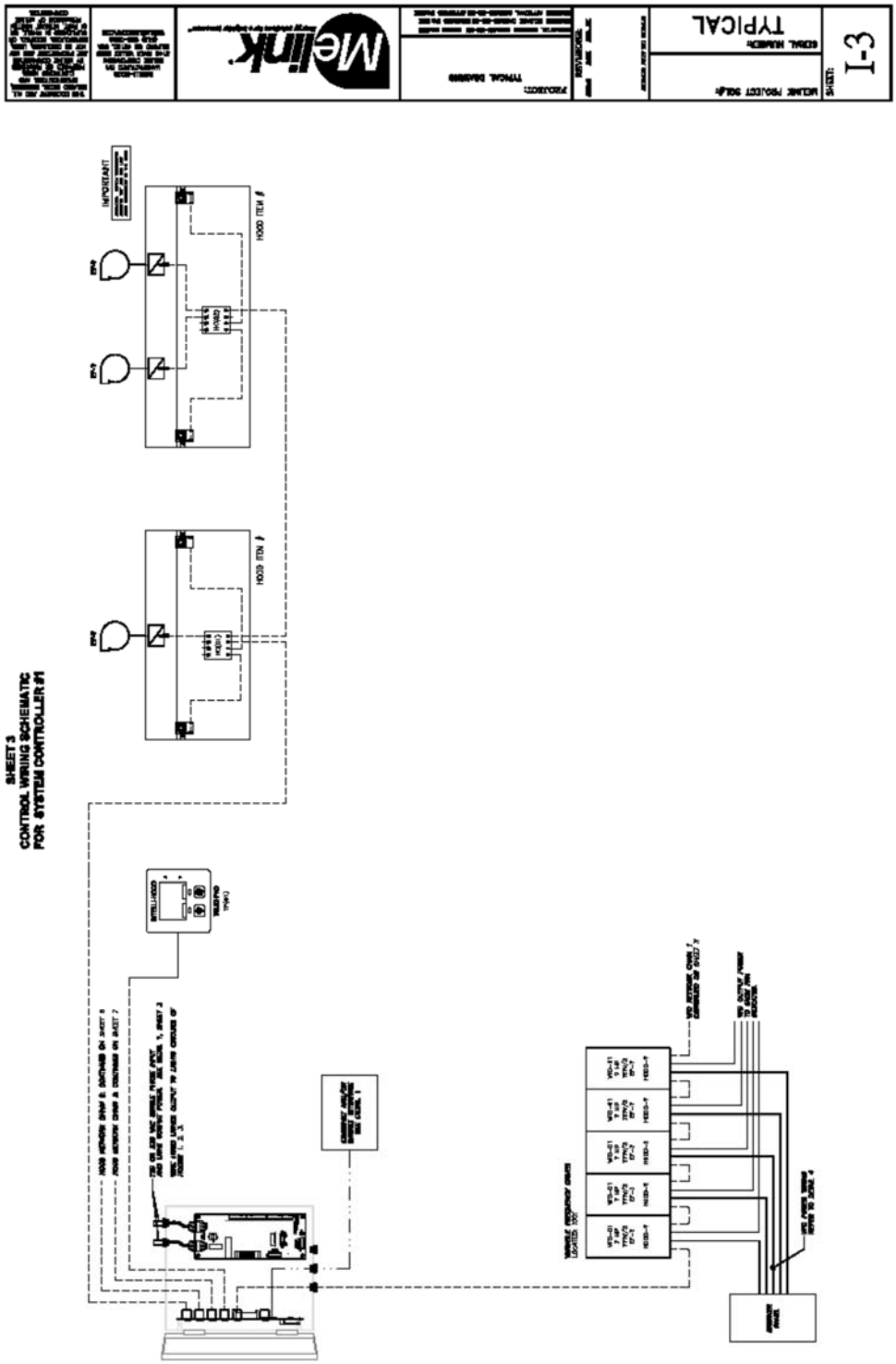

APPENDIX B

Program Settings

#	Parameter	Input Type	Range of Values	Default Value
Hood Controller Parameters				
HCxx-01	Hood Controller Address	Incrementing Value	0 To 39	1
HCxx-02	Name	Text Field Input	Up to 20 Characters	'HC-x' Where 'x' is the address
HCxx-03	Optic Sensor	Single Select List	Yes or No	Yes
HCxx-04	Temp Channel 1	Single Select List	No, Hood, On/Off, Supply, Space, Auto Span	Hood
HCxx-05	Temp Channel 1 Span Max. (°F)	Single Select List	50F To 200F (Increments Of 5F)	90
HCxx-06	Temp Channel 2	Single Select List	No, Hood, On/Off, Supply, Space, Auto Span	No
HCxx-07	Temp Channel 2 Span Max. (°F)	Single Select List	50F To 200F (Increments Of 5F), Match Channel 1	Match Channel 1
HCxx-08	Temp Channel 3	Single Select List	No, Hood, On/Off, Supply, Space, Auto Span	No
HCxx-09	Temp Channel 3 Span Max. (°F)	Single Select List	50F To 200F (Increments Of 5F), Match Channel 1	Match Channel 1
HCxx-10	Temp Channel 4	Single Select List	No, Hood, On/Off, Supply, Space, Auto Span	No
HCxx-11	Temp Channel 4 Span Max. (°F)	Single Select List	50F To 200F (Increments Of 5F), Match Channel 1	Match Channel 1
HCxx-12	Temp Actual Channel 1	Enter Offset	User Inputs Actual Temperature 0 To 500F	Measured Temp
HCxx-13	Temp Actual Channel 2	Enter Offset	User Inputs Actual Temperature 0 To 500F	Measured Temp
HCxx-14	Temp Actual Channel 3	Enter Offset	User Inputs Actual Temperature 0 To 500F	Measured Temp
HCxx-15	Temp Actual Channel 4	Enter Offset	User Inputs Actual Temperature 0 To 500F	Measured Temp
HCxx-16	Temp Channel 1 Span Min. (°F)	Single Select List	50F to 90F (Increments of 1F)	75
HCxx-17	Temp Channel 2 Span Min. (°F)	Single Select List	50F to 90F (Increments of 1F), Match Channel 1	Match Channel 1
HCxx-18	Temp Channel 3 Span Min. (°F)	Single Select List	50F to 90F (Increments of 1F), Match Channel 1	Match Channel 1
HCxx-19	Temp Channel 4 Span Min. (°F)	Single Select List	50F to 90F (Increments of 1F), Match Channel 1	Match Channel 1
HCxx-20	Optic Smoke Density	Single Select List	Low, Medium, or High	Medium
HCxx-21	BACnet Device Instance ID	Integer Value	0 to 4194302	0
HCxx-22	Active on BACnet	Single Select List	Yes or No	No

APPENDIX B

Program Settings

#	Parameter	Input Type	Range of Values	Default Value
Exhaust Hood Parameters				
EHxx-01	Primary Exhaust ID	Single Select List	1 to 39	1
EHxx-02	Name	Text Field Input	Up To 20 Characters	'Hood xx' where 'xx' is an incrementing number from 1
EHxx-03	Minimum Speed	Single Select List	30% To 100%, Increments Of 5%	30%
EHxx-04	Maximum Speed	Single Select List	30% To 100%, Increments Of 5%	100%
EHxx-05	Temperature Sensor Node(s)	Multi-Select List	01-1 to 39-4	None
EHxx-06	Optic Sensor Node(s)	Multi-Select List	1 to 39; Sensors listed in format of "Address".	None
EHxx-07	Auto On Hood Temperature	Single Select List	Not Used, Auto On 70F - 120F	Not Used
EHxx-08	Auto On Space Differential	Single Select List	Not Used, Room Difference +1F - +40F	Not Used
EHxx-09	Auto Off Hood Temp	Single Select List	Not Used, Auto Off 65F - 100F	Not Used
EHxx-10	Auto Off Space Differential	Single Select List	Not Used, Room Difference +1F - +20F	Not Used
EHxx-11	Auto On/Off Grouping	Single Select List	Yes Or No	Yes
EHxx-12	Temperature Alarm Auto On	Single Select List	Not Used, System, 100F, 125F, 150F, 200F, 250F, 300F	200F
EHxx-13	Short Cycle Ratio	Single Select List	Not Used, 20%, 30%, 40%, 50%, 60%, 70%, 80%	Not Used
EHxx-14	Exhaust Volume	Integer Input	0 to 100,000	1000
EHxx-15	Hood Group	Single Select List	1-10	1
EHxx-16	Optic Hang time	Single Select List	System, 5, 10, 15, 30, 45, 60, 120, 180, 300	System

APPENDIX B

Program Settings

#	Parameter	Input Type	Range of Values	Default Value
Exhaust Fan Parameters				
EFxx-01	Primary Exhaust Address	Single Select List	1 to 39	1
EFxx-02	Name	Text Field Input	Up To 5 Characters	'EF-xx' where 'xx' is the Primary Exhaust Address
EFxx-03	Output Type	Single Select List	System Output Allen Bradley Powerflex 4/40 Allen Bradley Powerflex 400 ABB ACH550 Trane TR200 Allen Bradley Powerflex 52x LSIS SV-iS7 Siemens G120P Schneider Altivair 212 Yaskawa Z100	ABB ACH550
EFxx-04	BACnet Device Instance ID	Integer Value	0 to 4194302	0
EFxx-05	Display Status	Single Select List	Yes or No	Yes
EFxx-06	Active on BACnet	Single Select List	Yes or No	Yes

Aux Airflow Parameters				
AAxx-01	Aux Airflow Address	Single Select List	40 to 128	41
AAxx-02	Name	Text Field Input	Up To 5 Characters	'AA-xx' where 'xx' is the address
AAxx-03	Algorithm	Single Select List	Average, Highest, Lowest	Average
AAxx-04	Related Airflows	Multi-Select List	List All Exhaust and Aux Airflows	None
AAxx-05	Output Type	Single Select List	System Output Allen Bradley Powerflex 4/40 Allen Bradley Powerflex 400 ABB ACH550 Trane TR200 Allen Bradley Powerflex 52x LSIS SV-iS7 Siemens G120P Schneider Altivair 212 Yaskawa Z100	ABB ACH550
AAxx-06	Design Airflow	Integer Input	0 to 100,000	1000
AAxx-07	BACnet Device Instance ID	Integer Value	0 to 4194302	0
AAxx-08	Display Status	Single Select List	Yes or No	Yes
AAxx-09	Active on BACnet	Single Select List	Yes or No	Yes

APPENDIX B

Program Settings

#	Parameter	Input Type	Range of Values	Default Value
System Parameters				
SY-01	Address	Integer Value	1	1
SY-02	Name	Text Field Input	Up To 20 Characters	System Controller
SY-03	Relay 1 Output	Single Select List	None Exhaust Temp Alarm Smoke Fan On MUA Damper Temperature Fault Optic Fault VFD Fault System Fault 24/7	MUA Damper
SY-04	Groups Affecting Relay 1 Output	Multi-Select List	1 to 10	1
SY-05	Relay 2 Output	Single Select List	Same as SY-03	MUA Damper
SY-06	Groups Affecting Relay 2 Output	Multi-Select List	1 to 10	1
SY-07	24VDC Output 1	Single Select List	Same as SY-03	MUA Damper
SY-08	Groups Affecting 24VDC Output 1	Multi-Select List	1 to 10	1
SY-09	24VDC Output 2	Single Select List	Same as SY-03	MUA Damper
SY-10	Groups Affecting 24VDC Output 2	Multi-Select List	1 to 10	1
SY-11	Digital Input 1	Single Select List	None Remote On/Off Remote Enable/Disable 50% Min Speed 60% Min Speed 70% Min Speed 80% Min Speed 90% Min Speed 100% Min Speed External Fault Input Lights On/Off External Alert	70% Min Speed
SY-12	Groups Affected by Digital Input 1	Multi-Select List	1 to 10	1
SY-13	Digital Input 2	Single Select List	Same as SY-11	Remote On/Off
SY-14	Groups Affected by Digital Input 2	Multi-Select List	1 to 10	1
SY-15	Digital Input 3	Single Select List	Same as SY-11	None
SY-16	Groups Affected by Digital Input 3	Multi-Select List	1 to 10	1

APPENDIX B

Program Settings

#	Parameter	Input Type	Range of Values	Default Value
		System Parameters (cont.)		
SY-17	Analog Output Algorithm	Single Select List	None, Average, Highest, Lowest	Average
SY-18	Analog Output Source	Multi-Select List	List all Aux Airflows	None
SY-19	Analog Input Function	Single Select List	N/A	None
SY-20	Bypass Timer	Single Select List	30 sec, 1 min, 5 min, 10 min, 20 min, 30 min, 1 hr, 2 hr, 4 hr	10 min
SY-21	Optic Hang Time	Single Select List	5 sec, 10 sec, 15 sec, 30 sec, 60 sec, 90 sec, 120 sec, 180 sec, 240 sec, 300 sec	15 sec
SY-22	Fan Speed Reporting Method	Single Select List	VFD Feedback, Command Speed	VFD Feedback
SY-23	Temperature Alarm Auto On	Single Select List	Not Used, 100F, 125F, 150F, 200F, 250F, 300F	200F
SY-24	Temperature Alarm Auto Off	Single Select List	Not Used, On-10F, On-20F, On-30F	Not Used
SY-25	Temperature Alarm Tone	Single Select List	Yes or No	No
SY-26	Temperature Alarm Hoods to Activate	Single Select List	All Hoods, Hood Group, Hood Only, None	All Hoods
SY-27	Data Log Sample Rate	Single Select List	10s, 30s, 1min, 2min, 3min, 5min, 10min, 30min	5 minutes
SY-28	Auto On, Manual Off, Delay Time	Single Select List	10s, 30s, 1min, 2min, 3min, 5min, 10min, 30min	2 minutes
SY-29	Unit Display	Single Select List	12H/F, 24H/F, 12H/C, 24H/C	12H/F
SY-30	Analog Output Min	Integer Value	0 to 100	0
SY-31	Analog Output Max	Integer Value	0 to 100	100
SY-32	VFD Baud Rate	Single Select List	9600 Baud, 19200 Baud, 38400 Baud, 57600 Baud, 115200 Baud	9600 Baud
SY-33	VFD Serial Mode	Single Select List	8-N-1, 8-E-1, 8-O-1	8-E-1
SY-34	Time Zone	Single Select List	Relevant Time Zones	New York, US (UTC -5, DST)
SY-35	Display Language	Single Select List	English, Francais, Espanol, Deutsche	English
SY-36	Use DHCP	Single Select List	Yes or No	Yes
SY-37	Static IP	IP Address	Valid IP Address	192.168.200.101
SY-38	Netmask	IP Address	Valid IP Address	255.255.255.0
SY-39	Gateway	IP Address	Valid IP Address	0.0.0.0
SY-40	DNS Server 1	IP Address	Valid IP Address	0.0.0.0
SY-41	DNS Server 2	IP Address	Valid IP Address	0.0.0.0
SY-42	BACnet Device Instance ID	Integer Value	0 to 4194302	654000
SY-43	BACnet Auto Number	Single Select List	Yes or No	Yes
SY-44	BACnet Port	Integer Value	47808 to 65535	47808
SY-45	BACnet DNET	Integer Value	1 to 65534	654
SY-46	BACnet Watchdog	Integer Value	0 to 600 (seconds)	300

APPENDIX B

Program Settings

#	Parameter	Input Type	Range of Values	Default Value
Touchpad Parameters				
TPx-01	Touchpad Hood Network Address	Single Select List	1-10	1
TPx-02	Name	Text Field Input	Up To 20 Characters	TP-01
TPx-03	Light Controller Addresses	Multi-Select List	System Controller, LC-01 to LC-10	System Controller
TPx-04	Bypass Softkey Visible	Single Select List	Yes Or No	Yes
TPx-05	Associated Groups On/Off	Multi-Select List	1 to 10	1
TPx-06	Hood Groups Displayed	Multi-Select List	1 to 10	1
Aux Touchpad Parameters				
ATx-01	Aux Touchpad Address	Single Select List	0-9	1
ATx-02	Name	Text Field Input	Up To 20 Characters	AT-1
ATx-03	Light Controller Addresses	Multi-Select List	System Controller, LC-01 to LC-10	System Controller
ATx-04	Bypass Button Active	Single Select List	Yes Or No	Yes
ATx-05	Associated Groups On/Off	Multi-Select List	1 to 10	1
Scheduling Parameters				
SDxx-01	Schedule ID	Single Select List	1 to 10	1
SDxx-02	Schedule Name	Text Field Input	Up to 20 Characters	'Schedule x' where 'x' is the ID number
SDxx-03	Groups	Multi-Select List	1 to 10	All Selected
SDxx-04	Action Start	Single Select List	None, Fans On, Fans Off, Preset Minimum, Calculated Minimum	None
SDxx-05	Action End	Single Select List	None, Fans On, Fans Off, Preset Minimum, Calculated Minimum	None
SDxx-06	Month Start	Single Select List	January through December	January
SDxx-07	Day Start	Integer Value	1 to 31	1
SDxx-08	Month End	Single Select List	January through December	December
SDxx-09	Day End	Integer Value	1 to 31	31
SDxx-10	Days of Week	Multi-Select List	Sun to Sat	All Selected
SDxx-11	Time Start	Hour:Minutes	00:00 to 23:59	08:00
SDxx-12	Time End	Hour:Minutes	00:00 to 23:59	22:00
SDxx-13	Preset Speed	Integer Value	0 to 100	100

APPENDIX B

Program Settings

#	Parameter	Input Type	Range of Values	Default Value
		Analog Output Module Parameters		
AOMx-01	Address	Single Select List	1 to 254	101
AOMx-02	Name	Text Field Input	Up to 20 Characters	'AOM-x' where 'x' is the address
AOMx-03	Analog Output 0 Algorithm	Single Select List	None, Average, Highest, Lowest	Average
AOMx-04	Analog Output 0 Related Airflows	Multi-Select List	List All Exhaust and Aux Airflows	None
AOMx-05	Analog Output 0 Min	Integer Value	0 to 100	0
AOMx-06	Analog Output 0 Max	Integer Value	0 to 100	100
AOMx-07	Analog Output 0 Type	Single Select List	0-10VDC, 0-20mA	0-10VDC
AOMx-08	Analog Output 1 Algorithm	Single Select List	None, Average, Highest, Lowest	Average
AOMx-09	Analog Output 1 Related Airflows	Multi-Select List	List All Exhaust and Aux Airflows	None
AOMx-10	Analog Output 1 Min	Integer Value	0 to 100	0
AOMx-11	Analog Output 1 Max	Integer Value	0 to 100	100
AOMx-12	Analog Output 1 Type	Single Select List	0-10VDC, 0-20mA	0-10VDC
AOMx-13	Analog Output 2 Algorithm	Single Select List	None, Average, Highest, Lowest	Average
AOMx-14	Analog Output 2 Related Airflows	Multi-Select List	List All Exhaust and Aux Airflows	None
AOMx-15	Analog Output 2 Min	Integer Value	0 to 100	0
AOMx-16	Analog Output 2 Max	Integer Value	0 to 100	100
AOMx-17	Analog Output 2 Type	Single Select List	0-10VDC, 0-20mA	0-10VDC
AOMx-18	Analog Output 3 Algorithm	Single Select List	None, Average, Highest, Lowest	Average
AOMx-19	Analog Output 3 Related Airflows	Multi-Select List	List All Exhaust and Aux Airflows	None
AOMx-20	Analog Output 3 Min	Integer Value	0 to 100	0
AOMx-21	Analog Output 3 Max	Integer Value	0 to 100	100
AOMx-22	Analog Output 3 Type	Single Select List	0-10VDC, 0-20mA	0-10VDC
AOMx-23	Digital Input 0	Single Select List	Same as SY-11	None
AOMx-24	Groups Affected by Digital Input 0	Multi-Select List	1 to 10	1
AOMx-25	Digital Input 1	Single Select List	Same as SY-11	None
AOMx-26	Groups Affected by Digital Input 1	Multi-Select List	1 to 10	1
AOMx-27	Digital Input 2	Single Select List	Same as SY-11	None
AOMx-28	Groups Affected by Digital Input 2	Multi-Select List	1 to 10	1
AOMx-29	Digital Input 3	Single Select List	Same as SY-11	None
AOMx-30	Groups Affected by Digital Input 3	Multi-Select List	1 to 10	1

APPENDIX B

Program Settings

#	Parameter	Input Type	Range of Values	Default Value
Digital Input Module Parameters				
DIMx-01	Address	Single Select List	1 to 254	111
DIMx-02	Name	Text Field Input	Up to 20 Characters	'DIM-x' where 'x' is the address
DIMx-03	Digital Input 0	Single Select List	Same as SY-11	None
DIMx-04	Groups Affected by Digital Input 0	Multi-Select List	1 to 10	1
DIMx-05	Digital Input 1	Single Select List	Same as SY-11	None
DIMx-06	Groups Affected by Digital Input 1	Multi-Select List	1 to 10	1
DIMx-07	Digital Input 2	Single Select List	Same as SY-11	None
DIMx-08	Groups Affected by Digital Input 2	Multi-Select List	1 to 10	1
DIMx-09	Digital Input 3	Single Select List	Same as SY-11	None
DIMx-10	Groups Affected by Digital Input 3	Multi-Select List	1 to 10	1
DIMx-11	Digital Input 4	Single Select List	Same as SY-11	None
DIMx-12	Groups Affected by Digital Input 4	Multi-Select List	1 to 10	1
DIMx-13	Digital Input 5	Single Select List	Same as SY-11	None
DIMx-14	Groups Affected by Digital Input 5	Multi-Select List	1 to 10	1
DIMx-15	Digital Input 6	Single Select List	Same as SY-11	None
DIMx-16	Groups Affected by Digital Input 6	Multi-Select List	1 to 10	1
DIMx-17	Digital Input 7	Single Select List	Same as SY-11	None
DIMx-18	Groups Affected by Digital Input 7	Multi-Select List	1 to 10	1
DIMx-19	Digital Input 8	Single Select List	Same as SY-11	None
DIMx-20	Groups Affected by Digital Input 8	Multi-Select List	1 to 10	1
DIMx-21	Digital Input 9	Single Select List	Same as SY-11	None
DIMx-22	Groups Affected by Digital Input 9	Multi-Select List	1 to 10	1
DIMx-23	Digital Input 10	Single Select List	Same as SY-11	None
DIMx-24	Groups Affected by Digital Input 10	Multi-Select List	1 to 10	1
DIMx-25	Digital Input 11	Single Select List	Same as SY-11	None
DIMx-26	Groups Affected by Digital Input 11	Multi-Select List	1 to 10	1
DIMx-27	Digital Input 12	Single Select List	Same as SY-11	None
DIMx-28	Groups Affected by Digital Input 12	Multi-Select List	1 to 10	1

APPENDIX B

Program Settings

#	Parameter	Input Type	Range of Values	Default Value
Digital Input Module Parameters (cont.)				
DIMx-29	Digital Input 13	Single Select List	Same as SY-11	None
DIMx-30	Groups Affected by Digital Input 13	Multi-Select List	1 to 10	1
DIMx-31	Digital Input 14	Single Select List	Same as SY-11	None
DIMx-32	Groups Affected by Digital Input 14	Multi-Select List	1 to 10	1
DIMx-33	Digital Input 15	Single Select List	Same as SY-11	None
DIMx-34	Groups Affected by Digital Input 15	Multi-Select List	1 to 10	1

Digital Output Module Parameters

DOMx-01	Address	Single Select List	1 to 254	111
DOMx-02	Name	Text Field Input	Up to 20 Characters	'DOM-x' where 'x' is the address
DOMx-03	Relay 0 Output	Single Select List	Same as SY-03	None
DOMx-04	Groups Affecting Relay 0 Output	Multi-Select List	1 to 10	1
DOMx-05	Relay 1 Output	Single Select List	Same as SY-03	None
DOMx-06	Groups Affecting Relay 1 Output	Multi-Select List	1 to 10	1
DOMx-07	Relay 2 Output	Single Select List	Same as SY-03	None
DOMx-08	Groups Affecting Relay 2 Output	Multi-Select List	1 to 10	1
DOMx-09	Relay 3 Output	Single Select List	Same as SY-03	None
DOMx-10	Groups Affecting Relay 3 Output	Multi-Select List	1 to 10	1
DOMx-11	Relay 4 Output	Single Select List	Same as SY-03	None
DOMx-12	Groups Affecting Relay 4 Output	Multi-Select List	1 to 10	1
DOMx-13	Relay 5 Output	Single Select List	Same as SY-03	None
DOMx-14	Groups Affecting Relay 5 Output	Multi-Select List	1 to 10	1
DOMx-15	Relay 6 Output	Single Select List	Same as SY-03	None
DOMx-16	Groups Affecting Relay 6 Output	Multi-Select List	1 to 10	1
DOMx-17	Relay 7 Output	Single Select List	Same as SY-03	None
DOMx-18	Groups Affecting Relay 7 Output	Multi-Select List	1 to 10	1

APPENDIX B

Program Settings

#	Parameter	Input Type	Range of Values	Default Value
Virtual Input Module Parameters				
VIMx-01	Address	Single Select List	1 to 254	1
VIMx-02	Name	Text Field Input	Up to 20 Characters	'VIM-x' where 'x' is the address
VIMx-03	Virtual Input 1	Single Select List	Same as SY-11	None
VIMx-04	Groups Affected by Virtual Input 1	Multi-Select List	1 to 10	1
VIMx-05	Virtual Input 2	Single Select List	Same as SY-11	None
VIMx-06	Groups Affected by Virtual Input 2	Multi-Select List	1 to 10	1
VIMx-07	Virtual Input 3	Single Select List	Same as SY-11	None
VIMx-08	Groups Affected by Virtual Input 3	Multi-Select List	1 to 10	1
VIMx-09	Virtual Input 4	Single Select List	Same as SY-11	None
VIMx-10	Groups Affected by Virtual Input 4	Multi-Select List	1 to 10	1
VIMx-11	BACnet Device Instance ID	Integer Value	0-4194302	0
Virtual Output Module Parameters				
VOMx-01	Address	Single Select List	1 to 254	11
VOMx-02	Name	Text Field Input	Up to 20 Characters	'VOM-x' where 'x' is the address
VOMx-03	Virtual Output 1	Single Select List	Same as SY-03	None
VOMx-04	Groups Affecting Virtual Output 1	Multi-Select List	1 to 10	1
VOMx-05	Virtual Output 2	Single Select List	Same as SY-03	None
VOMx-06	Groups Affecting Virtual Output 2	Multi-Select List	1 to 10	1
VOMx-07	Virtual Output 3	Single Select List	Same as SY-03	None
VOMx-08	Groups Affecting Virtual Output 3	Multi-Select List	1 to 10	1
VOMx-09	Virtual Output 4	Single Select List	Same as SY-03	None
VOMx-10	Groups Affecting Virtual Output 4	Multi-Select List	1 to 10	1
VOMx-11	BACnet Device Instance ID	Integer Value	0-4194302	0
Aux Lighting Controller Parameters				
LCx-01	Lighting Controller Address	Single Select List	0-9	1
LCx-02	Name	Text Field Input	Up To 20 Characters	ALC-1

Call Melink Customer Service at (513) 965-7300 if you have any questions.

Please let us know how we can improve our Installation Manual.
We want your experience with our product to exceed all expectations.

Melink®

Intelli-Hood®

Intelli-Hood®

KITCHEN VENTILATION CONTROLS

WHAT IS DCKV?

Demand control kitchen ventilation (DCKV) visually monitors the level of cooking activity and automatically instructs the exhaust fan to operate only as fast as necessary. Think of it as giving a brain to a basic stainless steel box. There are different approaches to DCKV. Since inventing the first DCKV system, Melink has perfected the Intelli-Hood® to yield the highest fan speed savings.

FAN SPEED COMPARISON

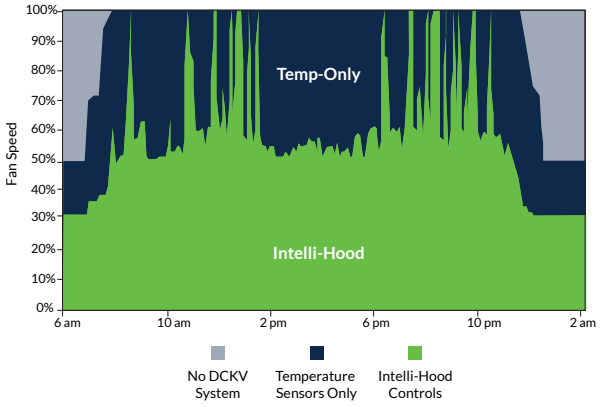

WHY INTELLI-HOOD?

HIGHEST ENERGY SAVINGS
Optic + Temperature Sensors
Self-Learning Algorithms Patent
Kitchen Design Optimization Patent
Compliance With ASHRAE 90.1.2013

OPTIMAL VENTILATION
Automation Of Kitchen HVAC
Self-Calibrating Sensors Patent
Reduced Hood Noise

SAFETY
NFPA 96 Compliance
Proactive Temperature Alarm
Gas Valve Integration

PROJECT DEVELOPMENT
Facility Audit
Educated Staff On Energy Rebates
Estimated Energy Savings Report
Turnkey Retrofits And New Construction

MONITORING + SUPPORT
4G Remote Monitoring + Performance Reports
Integration With Building Control Systems
Best Industry Warranty
24/7 Support With Preventative Maintenance Options

Intelli-Hood®

PRODUCTS & SERVICES

Melink T&B
National provider of commercial HVAC testing, adjusting, balancing, and commissioning services.

Melink Intelli-Hood®
Global manufacturer and installer of demand control kitchen ventilation systems.

Melink Solar
National developer of solar PV projects including finance, EPC (design/build), maintenance and monitoring services.

Melink Geo
Developer of geothermal HVAC systems and manufacturer of pre-engineered pump stations.

Melink PositiV®
Standalone building health monitor system to track and trend temperature, relative humidity, building pressure and CO2.

Melink®
Energy solutions for a brighter tomorrow™

5140 River Valley Road, Cincinnati, OH 45150
+1.513.965.7300
intellihood.com

Intelli-Hood® is a registered trademark of Melink Corporation.

WHO WE ARE

We are a global provider of energy efficiency and renewable energy solutions for commercial buildings. For more than 30 years, we've been helping companies save energy, increase profits, and make the world a more sustainable place. We are 100% employee-owned, our corporate headquarters is LEED Platinum and Net-Zero Energy, and our vehicle fleet consists of all hybrid and electric cars.

Integrity. Service Excellence. Innovation.

GSA Schedule Contract

ENERGY STAR Emerging Technology Award

POWERFUL CONNECTION AND CONTROL

The AC-250 NXS Smart Meter System

Honeywell

THE AC-250 NXS SMART METERING SYSTEM

Honeywell's AC-250 NXS smart meter is the new standard for accurate, reliable and safe residential gas metering, delivering high-performance measurements at an economical price. As a world-class smart diaphragm gas meter on the market, it is easy to install and fits in tight spaces, such as meter trees in apartment complexes.

Honeywell/Elster's trusted diaphragm meters have been sold for 150 years. The AC-250 NXS smart gas meter incorporates our unsurpassed expertise in gas metering and utilizes the same proven diaphragm meter technology as our legacy meters.

With a gas-tight, integrated shutoff valve linked to onboard pressure and temperature sensors, the meter enables an almost instant, autonomous shut-off response to system anomalies such as overpressure, high flow, leakage or fire. The AC-250 NXS features a field-replaceable battery with a 20-year operating life and is a direct-fit replacement for the AC-250.

GAME-CHANGING SOLUTION

Cellular IOT Technology
Next-generation LPWAN networks eliminate the need for the installation of a costly and inefficient private network and provide universal standard and extension coverage.

Intelligent Shutoff Valve and Overpressure Protection
Autonomous or utility-triggered gas shut-off in response to a variety of gas network system anomalies. Overpressure protection functionality drives significant safety transformation.

Advanced Connexo Software Solutions
The Honeywell Connexo suite enables seamless deployment and integration.

Proven Diaphragm Meter Technology
+100 million install base with proven diaphragm for +30 years of experience.

PRODUCT FEATURES

- Class I, Division I, Group D, Temp Class T1
- Reliable, proven diaphragm measuring unit with over 100M installed
- Built-in temperature compensation for high accuracy of the measurements
- 20 years of battery life with integrated two D-size batteries when using recommended operating parameters
- Reliable communication with head-end system (> 99% communication success)
- Public wireless and Cat M1 communications module
- Part of Honeywell connected utilities ecosystem, integrated into Honeywell Connexo Meter Data Collection (MDC) and Meter Data Management (MDM) system

PRODUCT COMPONENTS

The AC-250 NXS smart meter features these components in a compact meter:

- AC-250 NXS gas meter index, which contains the Cat M1 communications module, two batteries (one battery is replaceable) and a liquid crystal display (LCD) that provides a visual display of consumption, alarm messages and status information
- An internal shutoff valve
- Diaphragm measuring unit
- Integrated metrological unit with optical pickup
- Die-cast aluminum case
- Steel bosses

- Honeywell MeterSense maintenance handheld tools for easy maintenance of the device via optical communication
- Highly secured with end-to-end industry-standard encryption and authentication methods
- Honeywell SNAP prover integration with electronic accuracy adjustment
- Safety features:
  - Reliable, bubble-tight valve
  - Autonomous shut-off based on high pressure, high temperature, tamper and high flow rate
  - Safety alert to head-end system during valve closure/opening
  - High flow rate alarm
  - Reverse flow detection and alarm
  - Remote valve shut-off
  - High response mode (communicates every 15 minutes during emergency situations like high pressure, high temperature, high flow or valve closure)
- In-field changeable battery
- Metrology integrated inside the meter independent from the communication module, enabling the communication module to be interchangeable/replaceable in the field (not yet implemented)
- Volume, pressure, temperature and meter status reporting for head-end analytics
- Over-the-air (OTA) firmware upgrades for communication and metrology
- Local standardized optical service port for in-field diagnosis, valve operation and re-calibration

AC-250 NXS SHUTOFF VALVE

Safety is paramount in gas metering, and each Honeywell American Meter is available with the AC-250 NXS shutoff valve. Unlike competitive devices prone to gas leakage, this secure, integrated safety shutoff valve has a high-torque, precision seal that exceeds ASME B16.33 guidelines for gas tightness and comes with FCC, UL Class 1 Div1, IP67 and 250 Class approvals to meet ANSI standards.

The AC-250 NXS safety shutoff valve employs on-command shut-off to meet storm hardening, non-payment, delinquency and move-in/move-out requirements. The valve's autonomous shut-off response and alarms are linked to configurable triggers for high or low pressure, high or low flow and high temperature or fire, and peripheral sensors are provided for methane, seismic activity, corrosion, flooding and other indicators. Capabilities are also included to monitor mechanical pressure regulator health.

The key features and benefits of this reliable safety shutoff valve include:

- Remote disconnection of the gas supply
- Automatic gas disconnection on high-pressure/temperature events
- Single fault tolerance against unintentional opening of the valve
- Gas re-enabled only once all of the customer's gas appliances are closed
- No energy consumed when valve is open or closed
- Low energy consumption during valve movement
- When valve is closed, it resists at 60 PSI pressure
- Detection of open and closed positions (patent-pending solution)
- Configurable valve operation (e.g., valve closure thresholds)
- Located in the meter outlet (robust protection against dust)
- Closes in flow direction (remains tight with increasing pressure)
- Designed for more than 4,000 open/close cycles
- Tamper detection algorithm
- Several million installations in Europe and elsewhere
- Flow check algorithm enables remote opening of the valve in a safe manner

AC-250 NXS INDEX

- Low-cost, integrated Cat M1 cellular communications, including a 20-year data plan embedded in the meter purchase price and managed by Honeywell over the lifetime of the contract
- "1.5"-way communications with:
  - Communication always initiated by the meter; once initiated, full 2-way comms
  - Valve status alarm
  - Pressure and temperature alarms with high/low configurable alarm limits
  - Battery health and battery alarm
  - Tamper alarm with valve closure enablement for reverse flow, cover opening and detachment of index from meter
- Over-the-air firmware updates
- Field replaceable lithium primary battery
- No mechanical blocking of mechanics or rotating parts possible; optical sensor utilized and no moving mechanical parts inside of the index
- Current daily billing period and metrological diagnostic status available for easy remote diagnostics
- Integrated pressure sensor for "stolen meter" detection

AC-250 NXS SMART METER SPECIFICATIONS

SPECIFICATION	VALUE
Flow rate	250 CFH at 0.5in w.c.
Measurement principle	Molded, convoluted diaphragm
Safety	Class I, Division 1, Group D, Temp Class T1
Meter type	Temperature compensated (TC) or non-temperature compensated (NTC)
Meter Maximum Allowable Operating Pressure (MAOP)	5 PSIG (345 mbar)
LCD displayed units	CCF (100 x cubic foot)
LCD resolution	000000.001 CCF
Valve	Maximum 0.035 CFH (1 L/H) leakage rate at max 2PSIG diff pressure
Case	Die-cast aluminum case
Weight	12 lbs.
Gas type	Natural gas EN437- Type H,E,L Reference gases G20, G21, G23, G25, G26, G2
Connection sizes	10 LT, 20 LT, 30 LT,1" PITTS, 1" Sprague
Operating temperature ratings	Measurement -30° F (-34° C) to +140° F (60° C) Valve -13° F (-25° C) to +131° F (55° C) Index -40° F (-40° C) to +158° F (70° C)
Storage temperature	40° F (-40° C) to +158° F (70° C)
Battery information	2 lithium thionyl chloride 'D' cell batteries; 1 battery is replaceable
Battery life	20 years for both metrology and index communication (under recommended operating conditions) without battery change
Standards	Designed in compliance with ANSI B109.1, ANSIB109.0
Regulatory	This device complies with Part 15 of the FCC rules. FCC ID: XMR2020BG95M2
Component materials	Single coat polyester

DIMENSIONS

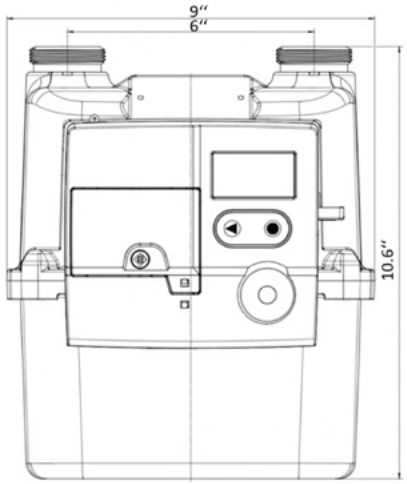

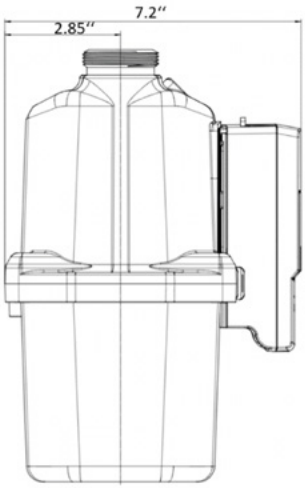

PROOF CURVE

AVERAGE ACCURACY			
25	50	200	245
100.7	100.1	100.2	99.9

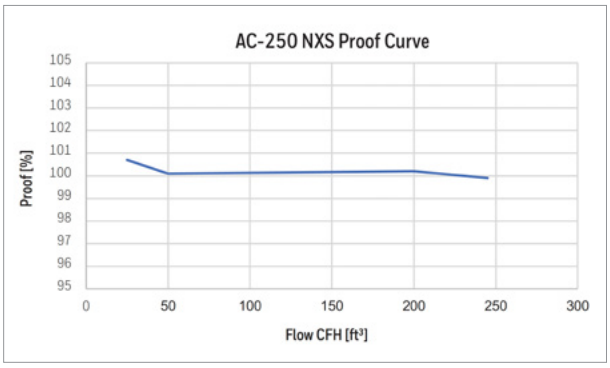

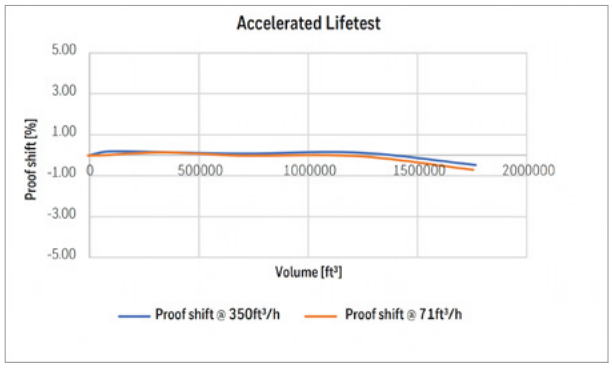

CAPACITIES* (0.60 SPECIFIC GRAVITY GAS)		
LINE PRESSURE PSIG (mbar)	DIFFERENTIAL INCHES W.C. (mbar)	CAPACITY SCFH (m^3/h)
0.25 (17)	1/2 (1.2)	250[1,2] (7.1)
1 (69)	2 (5)	598** (16.9)
2 (138)	2 (5)	597** (16.9)
5 (345)	2 (5)	598** (16.9)
10 (690)	2 (5)	601** (17.0)

[1] Propane - 158 SCFH (4.5 m3/h)

[2] Butane - 138 SCFH (3.9 m^3/h)

*Capacities determined with connection sizes as specified by ANSI B109.1

**Operating this meter above its rated capacity (250SCFH at ½" differential W.C.) could impact the long-term performance and reliability

For more information

SmartEnergy@Honeywell.com

Honeywell Smart Energy Sales: 800.786.2215

Product Support: 866.554.9007

Honeywell Smart Energy

2101 CityWest Blvd.

Houston, TX 77042

pmt.honeywell.com/us/en/businesses/smart-energy

©2023 Honeywell International Inc.

THE FUTURE IS WHAT WE MAKE IT

Honeywell

WaterFurnace®

Smarter from the Ground Up™

Geothermal Comfort System

7 Series

700A11

The 7 Series

With Variable Capacity Technology

The WaterFurnace 7 Series™ is quite possibly the most advanced heating and cooling system on the planet. It provides homeowners the ultimate in comfort and performance and represents our finest products. This line is for those who accept only the best and is built using the latest technologies and highest standards.

The 700A11 signifies groundbreaking innovations on multiple fronts—most notably as the geothermal industry's first launched variable capacity residential unit and the only unit to surpass both the 43.5 EER *and* 5.1 COP efficiency barriers. These ratings are vastly greater than ordinary conditioning systems and 30% higher than current two-stage geothermal heat pumps. The 700A11 is ENERGY STAR rated and was engineered in the HVAC industry's only in-house *EPA/ENERGY STAR Recognized Laboratory.*

Our Aurora communicating controls work in unison with the variable capacity compressor, variable speed loop pump and variable speed blower motor to offer a level of comfort you have to experience to believe. Best of all, 7 Series units use the stored energy in your yard to provide savings up to 70% on heating, cooling and hot water. We're extremely excited to share it with you.

Why Geothermal?

Geothermal is perfect for those who want to dramatically reduce their energy usage, save money on bills, and enjoy a more even, consistent comfort in their home. Over the next few pages we'll tell you a little more about geothermal and show you how you can benefit from a technology that's ***Smarter from the Ground Up***™.

Comfort that gives back

Geothermal's benefits

Geothermal heat pumps are not only the most comfortable way to heat and cool, they're also the most cost effective. They're versatile enough to excel in almost any home or any environment, and you'll find geothermal in more than 1 million households across Canada and all 50 U.S. states. They can be scaled for single-family homes to entire college campuses. In fact, we heat and cool our entire 110,000 square-foot headquarters with WaterFurnace equipment. Here are a few reasons why geothermal is one of the fastest growing technologies available for your home.

QUALIFIES✓ GEO TAX CREDIT 30%

Extra savings for geothermal

A 30% tax credit on equipment and installation costs is currently available to U.S. homeowners who install an ENERGY STAR rated geothermal system. The credit can be used to offset both AMT and regular income taxes and can be carried forward into future years. The 30% tax credit will last until the end of 2032 when it is scheduled to decrease to 26% in 2033 and 22% in 2034. Hurry and act now for the most savings!

Energy Efficient

WaterFurnace systems are rated number one in energy efficiency because they can deliver more than five units of energy for every one unit of electrical energy used. Compare that to even the best ordinary system that delivers less than one unit of energy for every unit it consumes. That translates into an efficiency rating exceeding 530%, compared to the most efficient gas furnace which rates only 98%.

Comfortable

WaterFurnace units are designed to run more often at low speeds to provide stable temperatures throughout the home and help eliminate hot or cold spots. This is especially true with variable capacity units. They provide a comfort you need to experience to believe. To achieve precise control over temperatures in up to 6 areas, add our IntelliZone2 zoning system.

Cost Effective

Because of the extraordinary efficiency of a WaterFurnace system, most homeowners save more on monthly bills than they pay for the system when installation costs are added to the mortgage. Any added investment over traditional equipment is usually recovered in just a few years, and many homeowners see a return on investment of 10-20% over the life of the system.

Quiet

WaterFurnace systems don't require noisy outdoor units that can disturb your peaceful surroundings. Even though variable capacity units are generally the quietest products we offer, we've taken a number of steps to make them even more so.

Environmentally Friendly

Geothermal systems are recognized by the United States Environmental Protection Agency as the most environmentally friendly, cost effective and energy efficient heating and cooling technology available. These systems also minimize the threats of acid rain, air pollution, the greenhouse effect and global warming—problems directly linked to the burning of fossil fuels. In fact, installing a single geothermal unit is the environmental equivalent of planting 750 trees or removing two cars from the road.

Reliable

Geothermal units aren't subjected to the punishing effects of outdoor weather or fuel combustion, so they last longer than nearly any other heating and cooling system. According to the American Society of Heating, Refrigerating, and Air-Conditioning Engineers, geothermal units have an average equipment life of 25 years while the underground loop system has a rated material life of more than 100 years. Ordinary air conditioners, furnaces and heat pumps are rated for only 12-18 years.

Clean Air

Large, high efficiency MERV 11 filters come standard with our units to provide exceptional indoor air quality and protect your family from dust and pollen. WaterFurnace units also circulate air more often, further filtering the air.

Flexible

One compact WaterFurnace unit provides heating, central air conditioning, and supplemental domestic hot water for your entire home. Horizontal, vertical, and bottom-flow configurations are available for a wide range of home applications, including newly constructed as well as existing homes. No matter what climate you live in, your WaterFurnace system will deliver.

Safe

Because natural gas, propane, or oil isn't required to operate a WaterFurnace system, there's no combustion, flames, or fumes and no chance of carbon monoxide poisoning.

Less Obtrusive

WaterFurnace systems don't require conspicuous wall-mounted equipment or outdoor units that create unsightly additions to your home's appearance.

Using the earth to heat & cool

The geothermal difference

A geothermal heat pump (GHP) taps into the renewable solar energy stored in the ground to provide savings up to 70% on bills. Using a series of underground pipes, it exchanges heat with the earth instead of outdoor air. While air temperatures can vary greatly from day to night or winter to summer, the temperature just a few feet below the earth's surface stays an average 55°-70°F year-round.

Summer cooling

As outdoor temperatures rise, a GHP collects the unwanted heat in your home and moves it to the cooler 55° earth. Meanwhile, ordinary heat pumps and air conditioners are forced to dump that heat outside. Unfortunately, hot summer air is already saturated with heat and is less willing to accept more. That makes ordinary cooling systems least efficient when you need them to be the most efficient.

Winter heating

As outdoor temperatures fall, a GHP draws from an underground reservoir of heat, concentrates it, and moves it to your home. Meanwhile, an ordinary heat pump is forced to collect heat from frigid winter air, making it least efficient when you need it to be the most efficient. And unlike a furnace, our units don't create heat through combustion. They simply collect and move it.

55°-70° *The average year-round ground temperature only three to four feet beneath the frost line.*

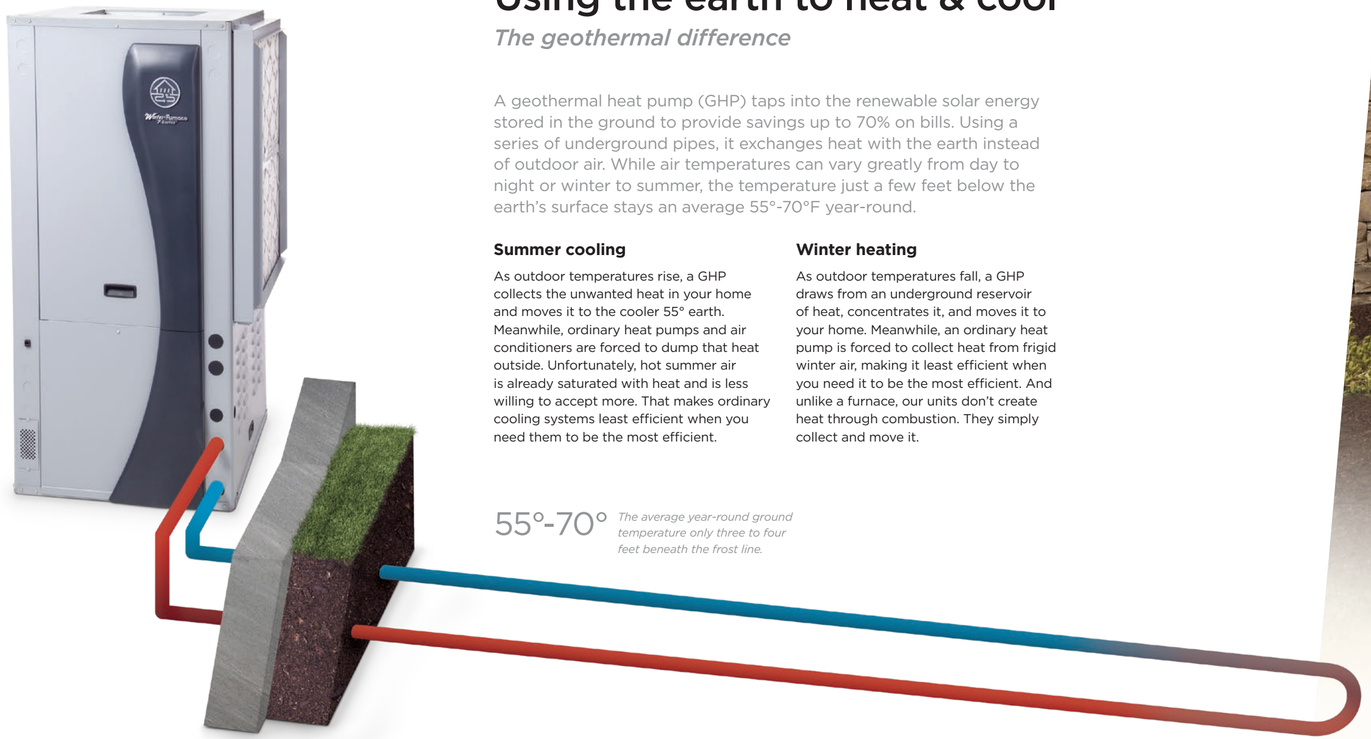

Note: Illustration represents how geothermal works and is not to scale. Loops are generally 4-6 feet below the earth's surface and between 150-400 feet long.

Traditional Air Conditioner

Summer air is already saturated with heat and is less willing to accept more. Thanks to the constant temperature of the earth, geothermal is more than twice as efficient at cooling than any ordinary heat pump or air conditioner.

Fossil Fuel Furnace

Ordinary furnaces return less than 98¢ of heat for each dollar spent burning polluting fossil fuels, while a geothermal system returns up to five dollars of heat for each dollar spent on electricity. That's because our units don't create heat through combustion. They simply collect and move it.

The heart of a geothermal system

Geothermal earth loops

A geothermal system uses a series of underground pipes called a “loop.” The earth loop eliminates the need for fossil fuels. It’s the heart of a geothermal system and its biggest advantage over ordinary heating and cooling technologies. The type of loop used is based on available land space and installation costs for specific areas.

Horizontal Loop

Used where adequate land is available, horizontal loops involve one or more trenches that are dug using a backhoe or chain trencher. High density polyethylene pipes are inserted, and the trenches are backfilled. A typical home requires 1/4 to 34 of an acre for the trenches.

Vertical Loop

Vertical loops are used when space is limited. Holes are bored using a drilling rig, and a pair of pipes with special u-bend fittings is inserted into the holes. A typical home requires three to five bores with about a 15-foot separation between the holes.

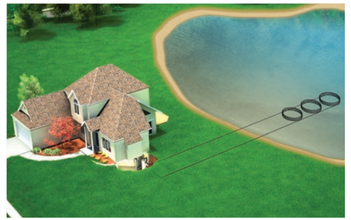

Pond Loop

If an adequately sized body of water is close to your home, a pond loop can be installed. A series of coiled, closed loops are sunk to the bottom of the body of water. A 1/2 acre, minimum 8-foot deep pond is usually sufficient for the average home.

Open Loop

An open loop is used where there is an abundant supply of quality well water. The well must have enough capacity to provide adequate flow for both domestic use and the WaterFurnace unit. 7 Series units require as low as 3-10 GPM, depending on size.

Directional Bore

Perfect for homeowners who need minimal landscape disruption, these loop types take advantage of the space available below ground. A directional bore loop can be installed either vertically or horizontally depending on yard space.

The only HVAC system you'll actually love

The 7 Series Technology

In addition to being the world's most efficient heat pump, the 700A11 uses our exclusive variable capacity technology to provide comfort unlike any system you've ever experienced. While other conditioning systems run at one or possibly two capacities (high and low), the 700A11 scales compressor output and airflow to exactly the level needed for any heating or cooling situation.

The 7 Series can ramp down to 20% of normal operation for the ultimate efficiency and comfort or scale up to 130% output using SuperBoost™ cooling. Our exclusive SuperBoost mode is for those brief periods when extra conditioning is needed and ensures guests stay cool and comfortable during summer get-togethers. And because the 700A11 operates over the industry's largest range of capacities (from 20-130%), it provides unmatched humidity control and can even eliminate the need for auxiliary heat in cold-weather climates.

Every 7 Series unit is computer run-tested to ensure flawless performance at start-up—and in the unlikely event it needs to be serviced, your unit is backed by one of the best warranties in the industry. This groundbreaking unit is a testament to our internal resources and the culture we've built here at WaterFurnace.

Inspired engineering creates products that inspire

Components of the 7 Series

Design Components:

1. Cabinet: The cabinet comes with a professional grade finish for long-lasting beauty and protection. The system is fully insulated for quiet operation with cleanable foil-backed insulation.

2. Advanced Hot Water Generation: With an optional hot water assist, the 7 Series preheats your water and delivers it to your water heater. A sophisticated microprocessor controls and monitors heat pump conditions and determines when there is excess heat available to route to the hot water heater. This allows you to utilize heat in the most efficient way possible.

3. All-Aluminum PinnaCoil™: Our exclusive all-aluminum PinnaCoil has anti-corrosive properties with an advanced tubing design that increases performance and provide a lower operating cost than alternatives.

4. Aurora Interface Diagnostic Port: WaterFurnace is the first to offer an external communication port, which allows service and diagnosis of our units without ever having to open them.

5. ThermaShield™: Our exclusive coaxial heat exchanger coating protects against condensation for temperatures below 50°F, extending its life.

6. Aurora UPC Controls (not shown): The Aurora UPC controls communicate directly with the Aurora Base Controller in the 7 Series, allowing for operation and control of the system—along with other home components for streamlined whole-house operation.

ISO/AHRI 13256-1

		Closed Loop		Open Loop	
Model & Size		Cooling EER	Heating COP	Cooling EER	Heating COP
036	Full Load	21.6	3.5	31.2	4.5
	Part Load	39.0	5.1	50.0	5.9
048	Full Load	20.0	3.4	30.0	4.
	Part Load	43.5	5.1	56.0	6.0
060	Full Load	19.1	3.4	27.1	4.3
	Part Load	40.0	5.1	55.0	5.8

Most Efficient 2023 www.energystar.gov

AHRI CERTIFIED www.ahrinet.org

7. Variable Capacity Compressor: WaterFurnace was the first geothermal brand to offer two-stage units. Now, we're the first to launch residential variable capacity units. Variable capacity compressors offer soft start capabilities and gently ramp up to speed for quiet operation while also eliminating light flicker.

8. Aurora Controls: Aurora Controls offer full two way communication between components, advanced operating logic and robust troubleshooting capabilities. It carries support for true energy monitoring, extended hot water generation control and integration with our IntelliZone2 zoning system. Incorporating the Aurora Web Link (AWL) module also extends communication protocols to include the internet, smart grids, home automation networks and more.

9. Blower Motor: WaterFurnace was the first to offer variable speed blowers for geothermal equipment, and now we're improving upon that by adding two way communication capabilities. A variable speed ECM motor runs at only the speed needed for maximum efficiency and savings. When Active Dehumidification is enabled, our Aurora Controls optimize the blower to maximize moisture removal.

10. Filter and Filter Rack: Pleated MERV 11 filter is standard while an optional pleated MERV 13 is available for improved air quality. Filter rack holds 1" or 2" filters and is field convertible.

Finishing touches

Accessories

Choosing the right accessories can greatly improve the comfort levels in your home and can even allow you to expand the functions of your existing WaterFurnace system. Each item has been designed to work hand in hand with your system to allow flawless and convenient operation. Here are some of our most popular accessories. Visit ***waterfurnace.com*** for more.

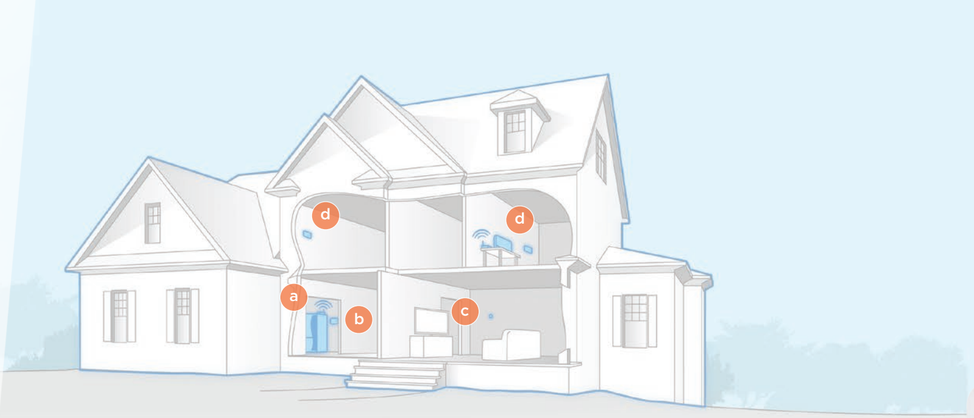

Symphony Web-Enabled Home Comfort Platform

Imagine a platform that can provide detailed feedback of your comfort system in real-time and the tools to control it all from any web-enabled smart phone, tablet, or computer. That's Symphony. Symphony is a Wi-Fi based comfort platform that's unsurpassed in its ease of use, feature set and the level of information it provides. Symphony marries the Aurora controls of a WaterFurnace geothermal system with our WebLink router, giving you access to the comfort system from practically anywhere. Symphony is cloud-based so there's no software to install and provides control over the entire geothermal system-not just the temperature as in other 'smart thermostat' systems.

a. Aurora WebLink
b. Symphony Thermostat
c. Invisible Thermostat Capability
d. Advanced Zoning System

Symphony's compatibility with Amazon Alexa allows you to control your unit with voice commands.

Note: Depending on the control package not all Symphony features may be available.

IntelliZone2*

The IntelliZone2 allows you to precisely control temperatures in up to four different areas with our dual capacity systems and up to six different areas with our variable capacity equipment. The result is the ultimate in comfort and cost savings. You've already chosen the finest heating and cooling system available; now choose the most advanced zoning system available to control it.

The IntelliZone2 24V option is also available for any WaterFurnace system not equipped with Aurora Advanced (AXB) Controls.

TPCC32U01 Deluxe Touch-Screen

A beautiful communicating color touch-screen thermostat that provides intuitive comfort control. This programmable thermostat can also provide instantaneous and 13 month energy monitoring history.* The TPCC32U01 features 3 heat and 2 cool stages, dual fuel capabilities, Comfort Talk error communication, humidity control, outdoor sensors and more.

** Energy monitoring requires our AXB advanced controls.*

GeoTank™

The WaterFurnace GeoTank is simply the best way to capture free preheated water from your unit.*

**GeoTank is to be used in series with another hot water heater to maximize hot water generation capacity.*

TPCM32U04A Elite Programmable

This powerful thermostat is great for any system. It allows dual fuel capability, winter humidity control, text based output and Comfort Talk error communication.

The WaterFurnace name has been synonymous with geothermal since we were founded in 1983. Over the years we've worked to innovate new technologies, integrate key trends and grow our core business to represent clean and sustainable solutions. Our units combine sound engineering with the highest levels of quality control to provide you with some of the most efficient heating and cooling systems on the planet. WaterFurnace—***Smarter from the Ground Up.***

ISO Accreditations:

Registered ISO 9001:2015 Company

Accredited ISO 17025:2017 Laboratory

Certified ISO 14001:2015 Company

WaterFurnace® *Smarter from the Ground Up*™

visit us at ***waterfurnace.com***

MADE IN THE MIDWEST

GEO PROUD MEMBER

Intertek

ENERGY STAR Most Efficient 2023 www.energystar.gov

©2023 WaterFurnace International, Inc. WaterFurnace International, Inc., 9000 Conservation Way, Fort Wayne, IN 46809-9794. WaterFurnace has a policy of continual product research and development and reserves the right to change design and specifications without notice. In an effort to minimize the environmental impact of this brochure, it was printed with a minimum of 10% post-consumer waste recycled paper.

BR2700AN 01/23

Breathe New Life Into Your Coils

Drive Energy Savings with AQUIS Coil Restoration

AQUIS, the nationwide leader in AHU renewal, now offers a process that restores coils to like-new condition. **AQUIS Coil Restoration** combines a high-performance sanitization process with an innovative probiotic technology in order to detach and eliminate biofilms from deep within coils. The result is coils that are cleaned at a microscopic level, driving increased operational efficiency, extending coil service life and improving indoor air quality.

What Are Biofilms? Biofilms are complex communities of microbes, including pathogens, that form on coil fin surfaces and become the foundation for buildup. Over time, biofilm buildup blocks heat transfer and impedes airflow, causing coils to operate far below peak design conditions.

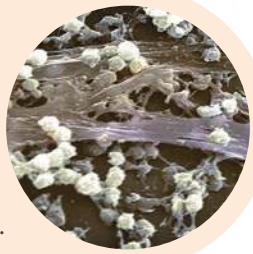

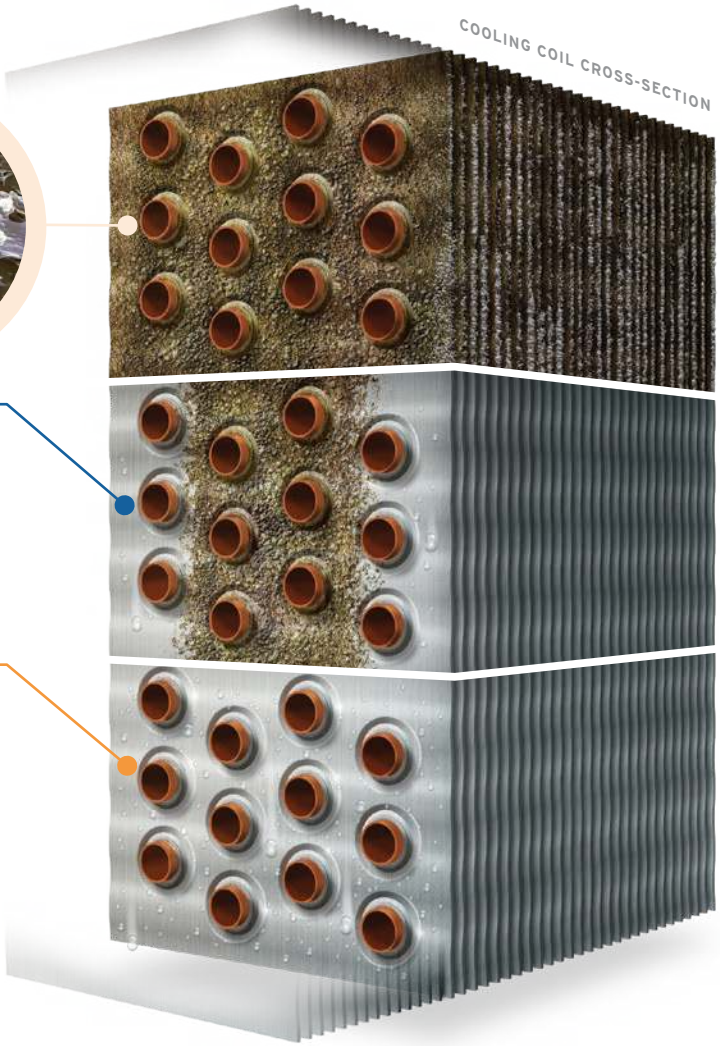

Conventional Coil Cleaning

- Pressure washers and steam cleaners fail to penetrate and clean biofilms deep within coils
- Uses toxic, corrosive, VOC-containing cleaning agents
- Provides only temporary improvement in heat transfer

AQUIS Coil Restoration

- Uses super-heated water to penetrate deep within coils to comprehensively remove biofilm buildup
- Uses a safe and non-corrosive probiotic technology to breakdown and eliminate biofilms
- Unlocks heat transfer efficiency, increasing coil BTU performance by as much as 100%*
- Renews airflow performance with documented increases upwards of 50%*

*Measured in BTU & CFM output by a third party firm.

AQUIS®

Leaders in Air Handler Renewal

NFPA ASHRAE EPA GSA Contract Holder

888-494-1191 | sales@aquissolutions.com | aquissolutions.com

© 2019 AQUIS. All Rights Reserved.

We're On The GSA!

AQUIS is proud to announce that it has been awarded a five-year GSA Contract. As a GSA Schedule Contract Holder, we can now offer our value-added air handler refurbishment services with the convenience and value that only a GSA Contract provides.

Contract Number: GS-21F-0151X **DUNS: 807803866**

PROUD GSA CONTRACT HOLDER

Save your budget and avoid costly air handler replacement with the life-extending AQUIS System.

AQUIS System Benefits

- Extends air handler service life
- Stops damaging water leaks
- Restores structural integrity
- NFPA 90A fire code compliant
- Slopes pans per ASHRAE 62.1
- Eliminates standing water
- Improves indoor air quality
- No detectable odors or VOCs
- Minimal equipment downtime

"The AQUIS System did a great job of sealing the concrete floors in our air handlers to eliminate damaging water leaks. This has allowed us to prolong the life of our air handlers and avoid a very costly replacement. The AQUIS Installation Team did a fine job finishing the project on schedule and with minimum impact on my facility."

– Aaron Heil, FSI Field Supervisor, Columbus, Ohio

AQUIS®

Leaders in Air Handler Renewal

NFPA ASHRAE EPA GSA Contract Holder

888-494-1191 | sales@aquissolutions.com | aquissolutions.com

© 2019 AQUIS. All Rights Reserved.

Air Handlers: Prime Amplification Site of Harmful Microbial Growth in Buildings

Did You Know?

- The dark, damp conditions inside an air handler create the perfect environment for biofilm
- The massive surface area of cooling coils serves as an ideal site for the support of biofilm
- Improperly sloped drain pans lead to standing water and the formation of biofilm
- Iron-rich water in rusted drain pans can accelerate the growth of bacteria by 100x
- Improperly configured p-traps inhibit proper drainage and support biofilm growth
- Aging fiberglass insulation retains moisture and is a breeding ground for microbial growth

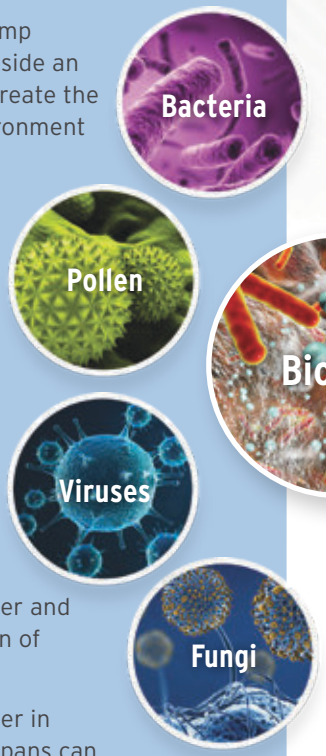

* **Source:** Biological Contamination in the HVAC System; Yang, C.

PROBLEM

The interior of an air handling unit (AHU) is a major source of microbial growth such as fungi, bacteria, and viruses. Cooling coils, condensate drain pans and fiberglass insulation are the primary amplification sites for microbial growth*. These microbes are small enough to bypass filtration where they thrive and proliferate in the AHU in the form of biofilms. Biofilms are vast communities of microbes protected by a strong, tacky biopolymer, called the EPS. As a result, biofilms are highly resistant to conventional cleaning methods. Over time, biofilms release microbes into the airstream resulting in a negative impact on indoor air quality.

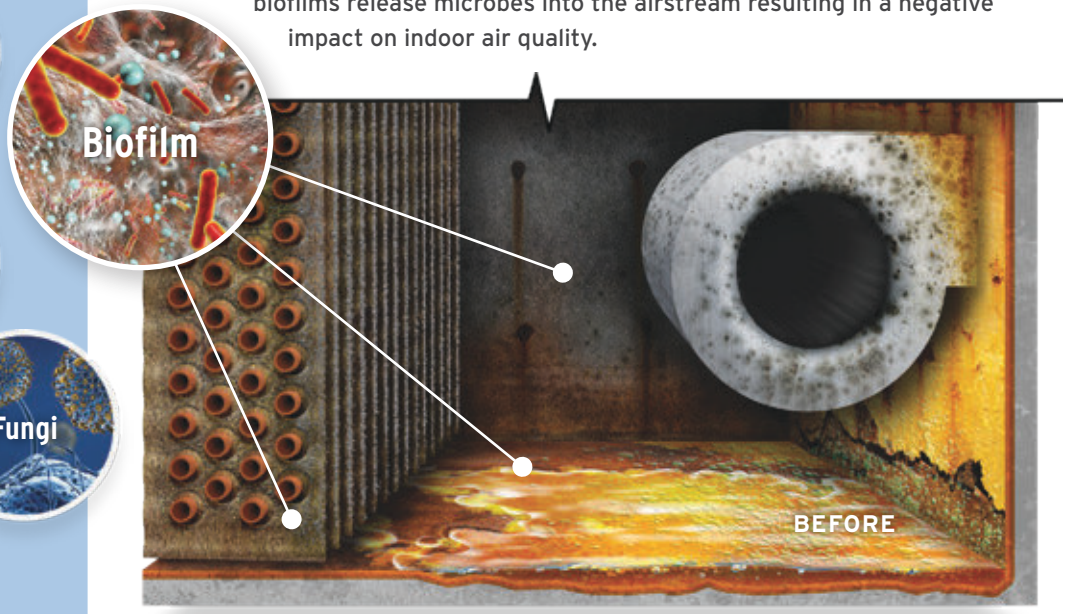

SOLUTION

AQUIS AHU Refurbishment seals and protects air handler substrates, creating smooth antimicrobial surfaces for effective drainage and easy cleaning.

AQUIS Coil Restoration combines a high-performance sanitization process with an innovative probiotic technology to eliminate biofilms from deep within coils.

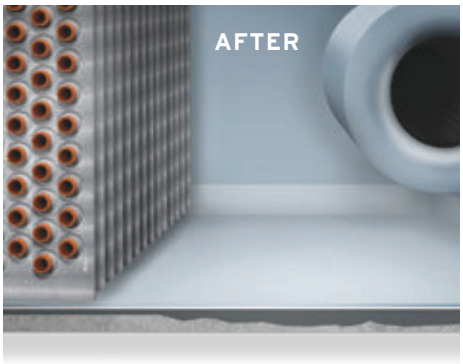

AQUIS®

Leaders in Air Handler Renewal

NFPA ASHRAE EPA GSA Contract Holder

888-494-1191 | sales@aquissolutions.com | aquissolutions.com

© 2020 AQUIS. All Rights Reserved.

THREE PHASE PADMOUNT TRANSFORMERS

Short for "Tamper-proof, compartmentalized, liquid-filled, pad mounted transformer", all padmount designs feature fully enclosed tamper-proof terminal compartments and can be supplied with dead-front or live-front configuration, for loop or radial feed applications, with Type II mineral oil, or environmentally friendly and high flash-point Envirotemp™ FR3™.

All new Maddox padmount transformers are constructed of the highest quality materials and built in the US to heavy duty industrial standards, making them ideal for commercial and industrial applications such as data centers, solar step-up, manufacturing facilities, shopping centers, etc. Our padmounts are designed to the latest department of energy efficiency standards built and tested in accordance with industry standards including NEMA, ANSI C.57, DOE, and IEEE as applicable.

With thousands of new units in stock and ready-to-ship, and the manufacturing ability to produce almost any custom design, Maddox stands ready to meet your transformer need(s). Maddox stocks all standard configurations to match most common applications and deliver on short notice.

Design

HV Bushing Config.:
- Dead front or live front
- Loop feed or radial feed

Fluid Options:
- Type II Mineral Oil
- Envirotemp™ FR3™

Standard Gauge/Accessory Package:
- Pressure relief valve
- Pressure vacuum gauge
- Liquid temp & level gauges
- Drain & sample valve
- Adjustment taps

Switch Options:
- 2 Position LBOR Switch
- 4 Position LBOR Switch (V-blade or T-blade)
- (3) 2 Position LBOR Switches

Fusing Options:
- Bayonets w/ isolation links or CLFs

Construction:
- 5-legged core
- Rectangular wound copper or aluminum windings
- Carbon rienforced or stainless steel tank
- Steel divider between HV and LV cabinets
- Penta-head captive bolt

Optional Design Features & Accessories:
- Gauges w/ Contacts
- External drain and sample valve
- Electrostatic Shielding
- Step-up Design
- Surge-Arresters

Available Ratings

Table 1. Typical Transformer Ratings

Sizes (kVA)	45, 75, 112.5, 150, 225, 300, 500, 750, 1000, 1500, 2000, 2500, 3000, 3750, 5000
Frequency	60 Hz or 50 Hz
Cooling Class	ONAN or KNAN
Temp Rise	55°C, 65°C, 55/65°C, 75°C
Voltages	*Available in Δ or Y configuration*
600V	208
	240
	416
	480
	600
2.5kv – 5kv	2400
	4160
	4800
15kV	12000
	12470
	13200
	13800
	14400
25kV	20780
	21600
	22900
	24940
	26400
35kV	33000
	34500

Fig 1. Padmount Transformer Outline

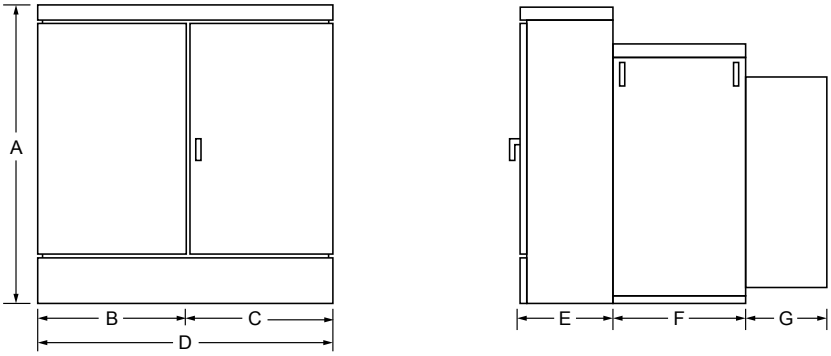

Table 2. Approximate Transformer Dimensions

kVA	A	B	C	D	E	F	G	Gallons	Weight (Lbs)
300	59”	29.5”	22”	51.5”	20.5”	24”	10”	196	4,056
500	59”	33”	26.5”	59.5”	24”	26.5”	10”	210	5,023
750	73”	36”	29”	65”	24”	26.5”	10”	358	7,664
1000	73”	36”	29”	65”	24”	27”	10”	354	8,530
1500	73”	36”	35.5”	71.5	24”	33.5”	10”	410	10,782
2000	75”	39.5”	28”	67.5	24”	35”	27”	433	12,490
2500	78”	39.5”	35.5”	75.5”	24”	37.5”	22.5”	545	14,246
3000	84”	30.5”	32”	62.5”	24”	37.5”	38”	550	14,014
3750	75”	50.5”	30”	80.5”	25.5”	42”	38”	730	17,785

Fig 2. Three Phase Maddox Padmount Transformer

Table 3. Common Accessories

1. Bayonet Fuses

2. Loadbreak Switch

3. Tap-changer

4. Bushings

5. Parking Stand

6: Gauges

Don't Replace. Refurbish.

Extend the Life of Your Air Handlers

AQUIS specializes in the comprehensive refurbishment of mechanical air handling units. With our patented composite coating systems, we extend the life of air handlers without the disruption and high costs associated with replacement. AQUIS offers the **only** fully compliant solution that meets the requirements of NFPA, ASHRAE and the EPA. Having completed thousands of installations nationwide in healthcare, higher education, government, manufacturing and commercial real estate, AQUIS installation teams are the foremost experts at addressing your air handler refurbishment needs.

AQUIS System Benefits

- Extends air handler service life
- Stops damaging water leaks
- Restores structural integrity
- NFPA 90A fire code compliant
- Slopes pans per ASHRAE 62.1
- Eliminates standing water
- Improves indoor air quality
- No detectable odors or VOCs
- Minimal equipment downtime

AQUIS System Diagram

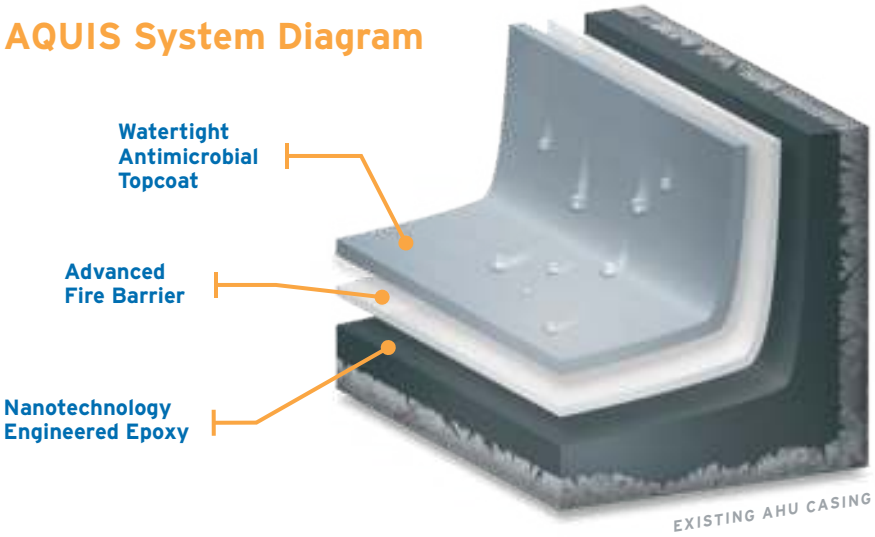

AQUIS®

Leaders in Air Handler Renewal

NFPA ASHRAE EPA GSA Contract Holder

888-494-1191 | sales@aquissolutions.com | aquissolutions.com

© 2019 AQUIS. All Rights Reserved.

Multi-Pleat™ Green13

MERV 13 Extended Surface Pleated Panel Filters

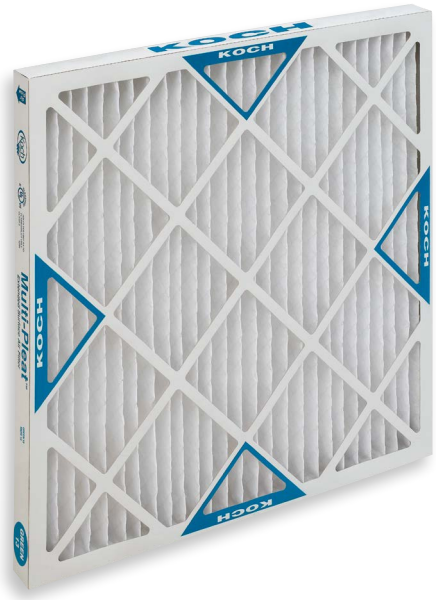

Multi-Pleat GREEN13

The Koch **Multi-Pleat Green13** is a sustainable component of green building development. By virtue of its MERV13 performance rating, the Green13 can earn points toward LEED certification in the US Green Building Council's Green Building Rating System.

The MERV 13 performance ratings provided by the **Multi-Pleat GREEN 13** make the filter an excellent upgrade from disposable filters and ordinary pleated filters in applications such as hospitals, laboratories and pharmaceutical plants, commercial office buildings, and in any system in which a higher degree of clean air is required.

Multi-Pleat GREEN13 Construction

The media in the **Multi-Pleat Green 13** is produced with a specialized blend of electrostatically-charged synthetic fibers, researched by Koch Filter specifically for use in extended surface air filtration. This layer of polypropylene fibers, known as the E-Layer, is composed of rectangular shaped fibers arranged in an intersecting cross-pattern design. This unique fiber configuration insures greater stability of the electrostatic charge, reduced pressure drop, and prolonged efficiencies compared to other filter medias.

Features

- **Earns LEED points**
- **MERV 13 performance rating**
- **Reduces energy costs**
- **Extended filter lifecycle**
- **Conserves resources**
- **Improves indoor environmental quality**
- **Available in 1", 2", 4" and 6" depths**

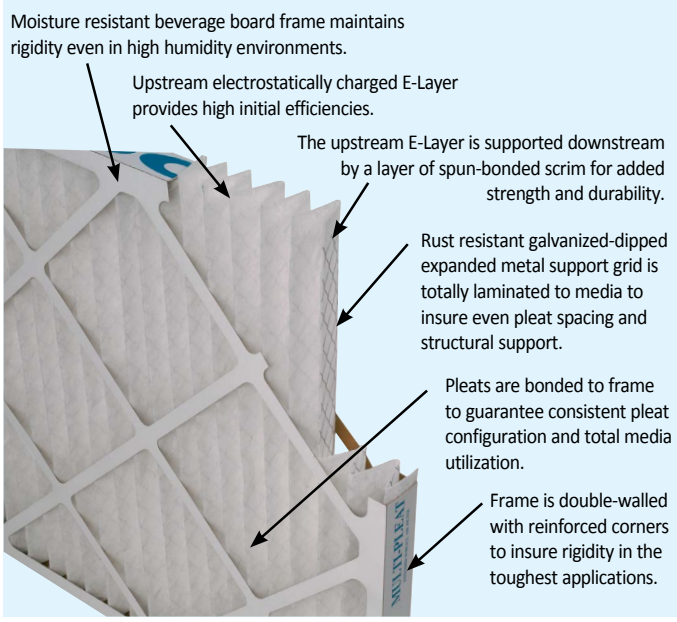

Nominal Size	Actual Size	Capacity (CFM)			Resistance (In. W.G.)			Media Area
		@300	@500	@625	@300 FPM	@500 FPM	@625 FPM	
10x20x1	9.50 x 19.50 x .75	425	700	NR	0.26	0.50	NR	2.9
12x24x1	11.38 x 23.38 x .75	600	1000	NR	0.26	0.50	NR	4.2
14x20x1	13.50 x 19.50 x .75	590	980	NR	0.26	0.50	NR	4.1
14x25x1	13.50 x 24.50 x .75	730	1215	NR	0.26	0.50	NR	5.1
15x20x1	14.50 x 19.50 x .75	625	1050	NR	0.26	0.50	NR	4.4
16x20x1	15.50 x 19.50 x .75	670	1115	NR	0.26	0.50	NR	4.7
16x25x1	15.50 x 24.50 x .75	840	1400	NR	0.26	0.50	NR	5.9
18x24x1	17.38 x 23.38 x .75	900	1500	NR	0.26	0.50	NR	6.3
20x20x1	19.50 x 19.50 x .75	840	1400	NR	0.26	0.50	NR	5.9
20x25x1	19.50 x 24.50 x .75	1050	1740	NR	0.26	0.50	NR	7.4
24x24x1	23.38 x 23.38 x .75	1200	2000	NR	0.26	0.50	NR	8.5
25x25x1	24.50 x 24.50 x .75	1310	2170	NR	0.26	0.50	NR	9.3
10x20x2	9.50 x 19.50 x 1.75	425	700	875	0.12	0.29	0.41	6
12x20x2	11.50 x 19.50 x 1.75	500	840	1050	0.12	0.29	0.41	7.2
12x24x2	11.38 x 23.38 x 1.75	600	1000	1250	0.12	0.29	0.41	8.6
14x20x2	13.50 x 19.50 x 1.75	590	980	1215	0.12	0.29	0.41	8.4
14x25x2	13.50 x 24.50 x 1.75	730	1215	1520	0.12	0.29	0.41	10.6
15x20x2	14.50 x 19.50 x 1.75	625	1050	1310	0.12	0.29	0.41	9.1
16x20x2	15.50 x 19.50 x 1.75	670	1115	1400	0.12	0.29	0.41	9.7
16x24x2	15.50 x 23.50 x 1.75	800	1350	1675	0.12	0.29	0.41	11.6
16x25x2	15.50 x 24.50 x 1.75	840	1400	1740	0.12	0.29	0.41	12.1
18x24x2	17.50 x 23.50 x 1.75	900	1500	1875	0.12	0.29	0.41	13.1
20x20x2	19.50 x 19.50 x 1.75	840	1400	1740	0.12	0.29	0.41	12.2
20x24x2	19.50 x 23.50 x 1.75	1000	1675	2100	0.12	0.29	0.41	14.6
20x25x2	19.50 x 24.50 x 1.75	1050	1740	2170	0.12	0.29	0.41	15.2
24x24x2	23.38 x 23.38 x 1.75	1200	2000	2500	0.12	0.29	0.41	17.5
25x25x2	24.50 x 24.50 x 1.75	1310	2170	2720	0.12	0.29	0.41	19.1
12x24x4	11.38 x 23.38 x 3.75	600	1000	1250	0.11	0.27	0.39	12.9
16x20x4	15.50 x 19.50 x 3.75	670	1115	1400	0.11	0.27	0.39	14.7
16x24x4	15.38 x 23.38 x 3.75	800	1350	1675	0.11	0.27	0.25	17.5
16x25x4	15.50 x 24.50 x 3.75	840	1400	1750	0.11	0.27	0.39	18.4
18x24x4	17.50 x 23.38 x 3.75	900	1500	1875	0.11	0.27	0.39	19.9
20x20x4	19.50 x 19.50 x 3.75	840	1400	1740	0.11	0.27	0.39	18.4
20x24x4	19.50 x 23.38 x 3.75	1000	1675	2100	0.11	0.27	0.39	22.2
20x25x4	19.50 x 24.50 x 3.75	1050	1740	2170	0.11	0.27	0.39	23.1
24x24x4	23.38 x 23.38 x 3.75	1200	2000	2500	0.11	0.27	0.39	26.6
24x24x6	23.38 x 23.38 x 5.75	1200	2000	2500	0.13	0.31	0.45	40.7

Notes:
• MERV (Minimum Efficiency Reporting Value) • Recommended Final Pressure Drop is 1.0" w.g. • Multi-Pleat Green13 filters are listed and tested in accordance with UL Standard 900.
• Performance data is based on ASHRAE Test Standard 52.2-2012.• Recommended maximum continuous operational temperature is 200° F.

KOCH FILTER®
PURE PERFORMANCE
8401 Air Commerce Drive, Louisville, KY 40219
toll free: 800.757.5624 | phone: 502.634.4796 | Fax: 502.969.2364
info@kochfilter.com | www.kochfilter.com

E-SAVER OPAL™ Series

HIGH PERFORMANCE TRANSFORMERS OPTIMIZED TO DELIVER 25 - 50% LESS LOSSES THAN DOE 2016 MINIMUM EFFICIENCY REQUIREMENT

APPLICATION

The E-SAVER OPAL™ Series is a family of ultra-efficient dry-type isolation transformers that has been optimized for different application load profiles, to maximize energy savings and ensure electrical system compatibility. These energy optimized units are perfect for Net Zero, LEED® and High Performing Buildings.

OPAL™ OPTIMIZED PERFORMANCE FOR THE APPLICATION LOAD

To achieve 25-50% more savings than the DOE 2016 requirement, Powersmiths' developed and implemented a design best practice called OPAL™ - Optimized Performance for the Application Load. Recognizing that the transformer has much more impact in an electrical system than just efficiency, OPAL considers the system as a whole, including goals like managing impedance, arc flash, fault level, inrush, harmonics, and more. OPAL™ is possible thanks to the tight feedback loop between design, onsite manufacturing, and extensive ongoing real world operating performance verification. The result is more savings for the same dollar.

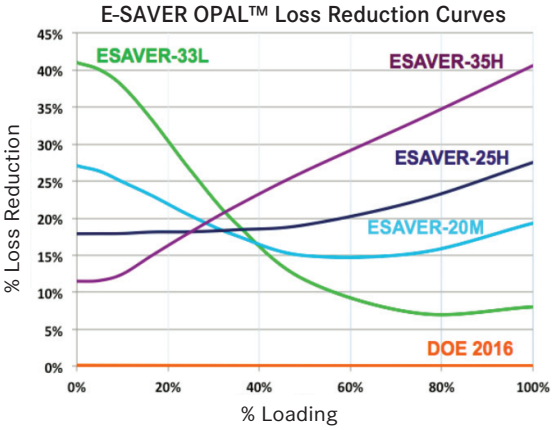

DOE 2016 IDENTIFIES BILLIONS IN SAVINGS BEYOND NEW LEGAL MINIMUM

Most manufacturers have designed their low-voltage transformers to just meet the new U.S. Dept. of Energy law (DOE 2016), setting minimum efficiency at a single required 35% load point, under an ideal sine wave factory test profile, sacrificing performance elsewhere. The DOE quantifies savings for going beyond DOE 2016 in billions of dollars. Furthermore, the DOE states that lifecycle savings can be maximized by optimizing for real-world loading. Powersmiths OPAL™ enables customers to access these savings – backed by real-world performance verification.

EXPANDED KVA SELECTION ENABLES RIGHT-SIZING

Powersmiths enables right-sizing of electrical infrastructure by offering a much broader selection of transformer kVA sizes. The capital cost, operating cost and footprint reductions can be dramatic - on the order of 30-50%, through smaller transformers, breakers, conductors, and distribution panels.

GUARANTEED PERFORMANCE FOR 32 YEARS

Powersmiths guarantees that every transformer we manufacture meets our published technical data, and furthermore, that this performance is met over the full term of the 32-year pro-rated warranty. Being able to trust that savings are both real and long-term is part of why organizations choose Powersmiths.

75kVA E-Saver OPAL™ Series shown with Cyberhawk TX™, hinged door and Rotatable IR Port™

K-RATING IS A MODERN REQUIREMENT

Many general purpose transformers are purchased and installed because they have the lowest first cost, however, they carry a UL label on the basis of feeding only linear loads. Since most connected loads today are electronic with nonlinear profiles, a low-voltage isolation transformer needs to be K-rated in order to have a valid UL listing for most applications today. E-Savers are appropriately K-rated.

ENVIRONMENTAL/GREEN BUILDING/LEED®/NET ZERO

By going meaningfully beyond the DOE 2016 baseline efficiency, the E-Saver™ contributes to green building, LEED®, Net Zero and carbon footprint reduction goals. Additional benefits of Powersmiths products include our ISO14001 certified manufacturing, integrated metering options and ability to integrate with the Powersmiths WOW™ Sustainability Management Platform.

CERTIFICATIONS & TESTING

Powersmiths certifications include ISO 9001 (Quality), ISO 14001 (Environment), ISO 17025 (Efficiency Test Lab), UL and CSA. Powersmiths has a production integrated nonlinear load test program that enables efficiency verification under real-world conditions, as well as IPMVP compliant field measurement of losses and efficiency, and Certified Test Lab Load Profile Test Reports.

METERING & ARC FLASH OPTIONS

Integrated metering can provide information about capacity utilization, load profiles, power quality and energy use. The lockable hinged door option, as well as our patented 360° Rotatable IR Port™ option enable quick and safe access to internal transformer connections, and reduces arc flash risk. Powersmiths also offers transformers with Integrated Power Distribution. For details see the Energy Station TX™ product information.

E-SAVER OPAL MODEL COMPARISON MATRIX[2]

Model	Optimized Load Range	Saving beyond DOE 2016*	Temp. Rise	Winding Material ***	Continuous Overload Capacity	K-Rating **/****	Applications
E-Saver-33L	0-25%	33%	<130°C	CU	5%	K7	Most Applications - office, education, healthcare, most other institutional, commerical (light load feeding electronic equipment).
E-Saver-20M	0-100%	20%	<115°C	CU	15%	K1, K9, K13	Where equipment or process loading varies widely, or where the load is expected to change significantly over time.
E-Saver-25H	75-100%	25%	<105°C	CU/AL CU opt.	20%	K13	Dedicated equipment (fans, pumps, elevators,etc), labs, broadcast, datacenter, industrial where loading is significant.
T1000-30H	50-100%	30%	<105°C	CU	20%	K20	Harmonic Mitigation Transformer - for heavy, harmonic-rich loads, high densities of electronic equipment, where voltage distortion could become excessive.
E-Saver-35H	75-100%	35%	<80°C	CU/AL CU opt.	33%	K20	Heavy loading for extended hours, and need for lower losses & operating costs, overload capacity, faster payback if high energy rate.
E-Saver-50H	75-100%	50%	<65°C	CU	50%	K30	For Special Applications close to full continuous load, where full load losses & heat output must be minimized, significant overload capacity.
E-Saver-S0L	0-100%	30%	<105°C	CU/AL CU opt.	20%	K20 (but not required for app)	Solar Applications - to avoid solar production waste - minimize transformer idling and full load losses, continuous overload capacity for longer life.

*Estimated average savings vs. DOE 2016 referance for the application load profile
** K-Rating per IEEE-C57.110
*** CU - Copper, AL Aluminum, CU/AL Copper primary with Aluminum Secondary
**** The high K-factor rating is not the goal of the design, but a consequence of the low current densities used to achieve the high loading efficiency goals

[1] U.S. Department of Energy, 10 CFR Part 431, [Docket No. EERE-2010-BT-STD-0048] Energy Conservation Program: Energy Conservation Standards for Distribution Transformers; Final Rule, April 18, 2013

TECHNICAL SPECIFICATIONS

The E-Saver™ is an ultra-efficient low-voltage dry-type isolation transformer that meaningfully exceeds the U.S. Dept. of Energy's new minimum efficiency law, commonly referred to as DOE 2016. Each model is optimized to maximize energy savings and electrical system compatibility in each target application, and has a K-factor listing per UL 1561 and an application appropriate K-rating per C57.110 (see Comparison Matrix). For models with an 'H' designation, K-rating is reduced by one level for 400kVA and larger, reflecting lower harmonic content reality at heavy loading for large kVA transformers (ex.K30->K20, K20->K13, K13->K9) to avoid overbuilding and associated unecessary cost. See table for individual model attributes.

E-Savers have a common-core (3-phase models), 10kV BIL, 200% rated neutral, are 60Hz rated (std), built to NEMA ST-20 and other applicable ANSI, IEEE standards and are UL listed and CSA approved. Both primary and secondary terminals and voltage taps (typically six 2.5%) are all front-accessible. E-Savers have a 220°C class insulation system that is NOMEX-based with an Epoxy Co-polymer impregnant with technical performance characteristics that embed lower environmental impact, long term reliability and long life expectancy. E-Savers carry OSHPD and IBC Seismic Certification. The seismic bracing option provides a higher 2.28g certification. All E-Saver models come standard in a Type 2 ventilated drip-proof indoor enclosure made of heavy gauge steel finished with epoxy powder coating for durability and low environmental impact, and are UL Listed for 2" rear clearance - a significant improvement over the typical industry 6" limit. A wide variety of enclosures and options are available.

Low Noise: Keeping audible noise at a minimum is key. While the NEMA ST-20 standard sets levels referenced by industry only a type test, not a production test, is required – so transformers on actual projects may be noisy. NEMA ST-20 also allows K13 transformers to be even noisier. Powersmiths builds 3dB quieter than NEMA standard values, and 6dB quieter than the K13+ allowance. Furthermore, every unit is tested to ensure quiet operation. For very sensitive environments, an additional 2dB lower noise option is available.

Management of Impedance, Inrush, Fault Level, Arc Flash: Powersmiths' OPAL™ design best practice includes addressing key transformer attributes like impedance, inrush, fault level, arc flash, to ensure smooth integration into an electrical system, avoiding the negative impacts often associated with high efficiency transformers. See individual technical data sheets for comprehensive values for all parameters.

Impedance: For 33L, 20M, 25H, 35H models, impedance is kept at or above 4.0% in order to manage downstream fault current and arc flash levels, and stay within interrupting capacity (kAIC) ratings. Higher impedance is available to meet specific project needs. 50H models are optimized to project specific requirements.

Inrush: Inrush currents are managed in order to avoid nuisance tripping of the primary breaker and to enable design engineers to use standard 125% rated primary protection, thereby avoiding expensive design changes that otherwise may be needed. Very low inrush designs are available as specific projects may require, for example some datacenter and medical applications.

ORDERING INFORMATION

OPAL PRODUCT FAMILY - MODEL - kVA - PV - SV - OPT

- OPAL PRODUCT FAMILY: E-SAVER
- MODEL: 33L, 20M, 25H, 35H, 50H
- kVA: kVA Rating Unit (9-1000 kVA)
- PV: Primary Voltage Input (Up to 600V)
- SV: Secondary Voltage Input (Up to 600/347V)
- OPT: Options if Applicable (See Available Options)

TECHNICAL DATA

kVA	Audible Noise	33L, 20M, 25H Model Weight Range (lbs)	Standard Case Size (in)	Alternate Smaller Case Size (in)*
15	42 dB	260-340	17.5W x 17D x 27.5H	17.5W x 14.5D x 25H
20	42 dB	300-380	25.5W x 18D x 30H	23W x 15.5D x 27.5H
25	42 dB	340-420	25.5W x 18D x 30H	23W x 15.5D x 27.5H
30	42 dB	380-470	25.5W x 18D x 30H	23W x 15.5D x 27.5H
45	42 dB	490-590	25.5W x 18D x 30H	No Alternate
50	42 dB	540-600	31.5W x 21.5D x 40H	No Alternate
63	47 dB	600-720	31.5W x 21.5D x 40H	26.5W x 20D x 33H
75	47 dB	650-800	31.5W x 21.5D x 40H	26.5W x 20D x 33H
100	47 dB	800-900	31.5W x 21.5D x 40H	No Alternate
112	47 dB	900-1000	31.5W x 21.5D x 40H	No Alternate
125	47 dB	1050-1150	37.5W x 26.5D x 48H	33W x 23D x 38H
150	47 dB	1170-1300	37.5W x 26.5D x 48H	33W x 23D x 38H
175	52 dB	1260-1450	37.5W x 26.5D x 48H	34.5W x 26.5D x 42H
200	52 dB	1375-1550	37.5W x 26.5D x 48H	34.5W x 26.5D x 42H
225	52 dB	1500-1700	37.5W x 31.5D x 52H	34.5W x 26.5D x 42H
250	52 dB	1650-1850	37.5W x 31.5D x 52H	37.5W x 26.5D x 48H
300	52 dB	1850-2000	37.5W x 31.5D x 52H	37.5W x 26.5D x 48H
400	57 dB	2150-2350	51.5W x 38D x 61H	43.5W x 33.5D x 55.5H
450	57 dB	2400-2650	51.5W x 38D x 61H	43.5W x 33.5D x 55.5H
500	59 dB	2800-3000	51.5W x 38D x 61H	43.5W x 33.5D x 55.5H
600	59 dB	3500-3800	64W x 47D x 67H	51.5W x 38D x 61H
750	61 dB	4000-4300	64W x 47D x 67H	Contact Factory
850	61 dB	4300-4850	64W x 47D x 67H	Contact Factory
1000	61 dB	4800-5500	64W x 53D x 67H	Contact Factory

* Typically the min cases are available for the standard models of 33L, 20M, 25H only.

AVAILABLE OPTIONS

Metering: Express Logger™, SMART™ or Cyberhawk TX™ (see product cut sheets for details)
CC: Core & Coils available for OEM Integration
3R: Type 3R, sprinkler proof/ outdoor ventilated enclosure
OSEC: Enclosure for outdoor public areas
SS: Painted stainless steel enclosure
NVI: Non-ventilated indoor enclosure
IRP: 360º Rotatable IR Port™
HD: Hinged Door
F50: 50 Hz design
1S: Single electrostatic shield
2S: Dual electrostatic shields
3S: Triple electrostatic shields
SPD: (120/208 V OR 277/480V)
- **PRO80:** 80kA, 7 mode, Filter
- **PRO120:** 120kA, 7 mode, Filter
- **PRO200:** 200kA, 7 mode, Filter
- **PRO240:** 240kA, 7 mode Filter
- **PROXX:** Where XX is custom ID

LKS: Lug kit, screw-type
LKC: Lug kit, compression type
VLI: Very Low Inrush
IMP: Custom Impedance
COL: Custom color
TS: Thermal sensors at 170°C and 200°C
RTR: Routine Test Report
NLT: Nonlinear Load Test with Certificate
2016TR: DOE 2016 Test Report
CTL: ISO 17025 Certified Test Lab, load profile test
SE: Sensitive environment, extra low noise
SB: Certified Seismic Bracing for 2.28g (for Certificate details contact Powersmiths)
WM: Wall-mount kit up to 75kVA is available (sold separately)

NOTE: The above data applies to the standard configuration of each kVA. Selection of some options may change enclosure size and/or transformer weight. Some options may be mutually exclusive. Consult factory for detailed product data sheet for these and other configurations. Efficiencies tested according to U.S. Dept. of Energy's 10 CFR Part 431, a linear load test at 35% of nameplate capacity. Refer to technical data sheet for comprehensive information for each specific model, kVA, and option selected.

As design optimization is continuous, technical data is updated over time. Please check with Powersmiths for latest revision.

Copyright © 2018, Powersmiths International Corp. All rights r eserved. OPAL, Cyberhawk, E-Saver, E-Saver 2016, E-Saver-33L, E-Saver-25H, E-Saver-35H, E-Saver-50H, E-Saver-20M, T1000, Express Logger, Rotatable IR Port and SMART are trademarks of Powersmiths International Corp. All ot her trademarks are those of their respective owners.
Please print responsibly.

POWERSMITHS

POWERSMITHS INTERNATIONAL CORP. 10 Devon Road, Brampton ON, L6T 5B5 Canada

Phone: (905) 791-1493 Toll-free: (800) 747-9627 Fax: (905) 791-8870 Email: info@powersmiths.com

WWW.POWERSMITHS.COM

807-000431-158-A10

QUALITY IS SOMETHING WE TAKE PERSONALLY

AMERICAN QUALITY
DESIGNED, ENGINEERED & ASSEMBLED IN THE USA

We design and assemble YORK® Sunline™ and Sunline MAGNUM™ Series single-packaged rooftop units here in North America, where we can closely monitor and improve processes that directly affect quality. It's this commitment to excellence that allows us to offer outstanding warranties, meet the highest industry standards and deliver energy-saving comfort that lasts.

Sunline™ Gas/Electric Rooftop Packaged Units (ZF)

MODEL	COOLING MBH	EER	IEER[1]	HEATING MBH OUTPUT	% SSE	LBS.
ZF180N30	165	11.0	12.1	240	80.0	1870
ZF180N40	165	11.0	12.1	320	80.0	1870
ZF210N30	204	11.0	11.9	240	80.0	2006
ZF210N40	204	11.0	11.9	320	80.0	2006
ZF240N30	240	10.0	11.0	240	80.0	2533
ZF240N40	240	10.0	11.0	320	80.0	2533
ZF300N30	270	10.0	10.5	240	80.0	2597
ZF300N40	270	10.0	10.5	320	80.0	2597

[1]IEER values of up to 13.2 available with the Intelli*Speed*™ option

Sunline™ Rooftop Packaged Units (ZF)

MODEL	COOLING MBH	EER	IEER[1]	ELECTRIC HEAT (KW)	LBS.
ZF180C00	165	11.0	12.1	18	1870
ZF210C00	204	11.0	11.9	18	2006
ZF240C00	240	10.0	11.0	18	2533
ZF300C00	270	10.0	10.5	18	2597

[1]IEER values of up to 13.2 available with the Intelli*Speed*™ option

Sunline™ MAGNUM™ Gas/Electric Rooftop Packaged Units (ZJ)

MODEL	COOLING MBH	EER	IEER[1]	HEATING MBH OUTPUT	% SSE	LBS.
ZJ180N30	172	12.2	13.4	240	80.0	2609
ZJ180N40	172	12.2	13.4	320	80.0	2609
ZJ210N30	202	12.1	13.0	240	80.0	2665
ZJ210N40	202	12.1	13.0	320	80.0	2665
ZJ240N30	240	11.0	12.0	240	80.0	2697
ZJ240N40	240	11.0	12.0	320	80.0	2697
ZJ300N30	280	10.6	11.0	240	80.0	2783
ZJ300N40	280	10.6	11.0	320	80.0	2783

[1]IEER values of up to 14.0 available with the IntelliSpeed™ option

Sunline™ MAGNUM ™ Rooftop Packaged Units (ZJ)

MODEL	COOLING MBH	EER	IEER	LBS.
ZJ180C00	172	12.2	13.4	2609
ZJ210C00	202	12.1	13.0	2665
ZJ240C00	240	11.0	12.0	2697
ZJ300C00	280	10.6	11.0	2783

LIMITED WARRANTIES:

ZF and ZJ gas/ electric models:

10 YEAR HEAT EXCHANGER LIMITED WARRANTY
5 YEAR COMPRESSOR LIMITED WARRANTY
1 YEAR PARTS LIMITED WARRANTY

ZF and ZJ electric/ electric models:

5 YEAR ELECTRIC HEAT EXCHANGER LIMITED WARRANTY
5 YEAR COMPRESSOR LIMITED WARRANTY
1 YEAR PARTS LIMITED WARRANTY

All models meet or exceed ASHRAE 90.1-2012 Standards, and select models are ENERGY STAR® qualified.

NATE WE ENCOURAGE NATE CERTIFICATION

YORK®

The YORK brand of Johnson Controls, Inc. ©2016 Johnson Controls, Inc. 5005 York Drive, Norman, OK 73069 www.YORK.com Subject to change without notice. PUBL-6452-D-0516 Supersedes: PUBL-6452-C-1015 All rights reserved.

YORK®

INSTALL CONFIDENCE

SUNLINE™ AND SUNLINE MAGNUM™ SERIES SINGLE-PACKAGED ROOFTOPS

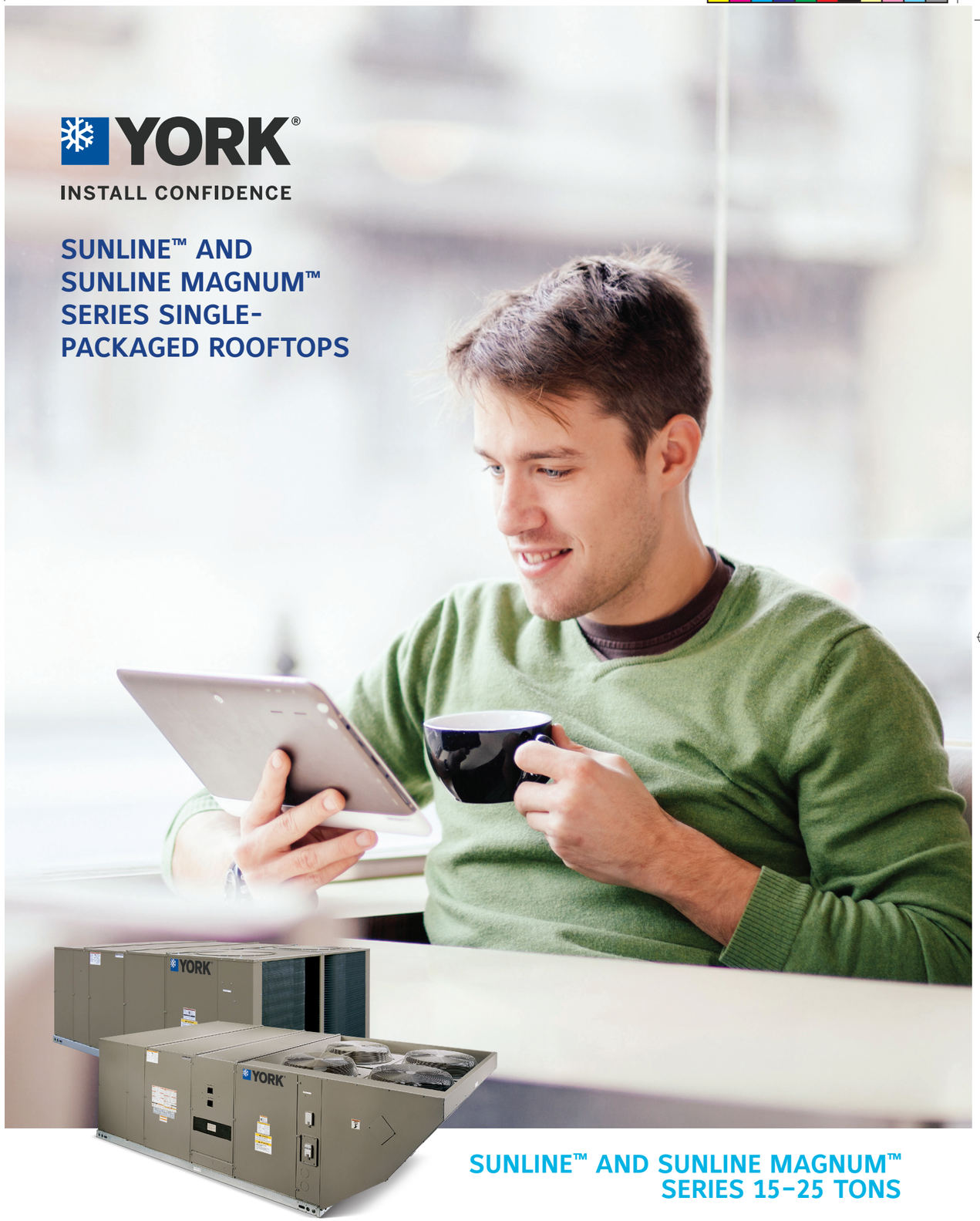

SUNLINE™ AND SUNLINE MAGNUM™ SERIES 15-25 TONS

SMARTER TECHNOLOGY FOR BETTER PERFORMANCE

For more than 140 years, YORK® commercial systems have provided heating and cooling solutions for some of the world's most demanding applications. Today, smart YORK® Sunline™ and Sunline MAGNUM™ Series packaged units deliver the simplicity and performance that give you a competitive advantage on practically every rooftop project.

SUNLINE™ AND SUNLINE MAGNUM™ SERIES SINGLE-PACKAGED ROOFTOPS 15–25 TONS

The YORK® Sunline™ Series combines high-efficiency and advanced economizer controls with unprecedented installation flexibility and low installed costs, providing a great solution for commercial-building applications.

- Simplicity® Smart Equipment (SE) Controls ensure easier installation, startup and troubleshooting versus electromechanical controls.
- High- and low-pressure switches – one each per circuit
- Power ventor motor with pre- and post-purge cycle
- Low-voltage circuit breakers
- Four independent cooling stages (Select Sunline MAGNUM™ models only)
- Double "V" coil bank with copper tubes and enhanced aluminum fins (Sunline MAGNUM™ only)
- Optional factory-mounted disconnect switch and your choice of powered or non-powered convenience outlet
- Four condenser fans (Sunline MAGNUM™ only)
- Internal fusing
- Class 1 and Class 2 transformers
- Two-stage gas train
- Belt drive blower motor
- Capillary tubes sheathed in vinyl to prevent chafing

GET THE ADVANTAGES OF ADVANCED FEATURES

Improved heat transfer.
The Sunline™ and Sunline MAGNUM™ units feature grooved copper tubes and enhanced aluminum fin construction indoor and outdoor coils for better heat transfer and improved efficiency.

Reliable operation.
The compressor is internally protected against high pressure and temperature to ensure dependable performance in tough conditions.

Greater durability.
Sunline™ and Sunline MAGNUM™ gas heat exchangers offer corrosion-resistant, aluminized steel tubular construction for long-term durability.

Limited maintenance.
For years of trouble-free service, the condenser and evaporator fan motor bearings are permanently lubricated to ensure reliable performance.

Solid foundation.
Installation goes smooth and easy thanks to full-perimeter base rails that are permanently attached to the unit to save time and materials.

Outstanding warranty.
With more than a century of innovation behind our name, you can depend on YORK® quality for year-round comfort and long-lasting durability. Built for years of trouble-free service and reliable operation, Sunline™ systems are backed by warranties you can count on.

Put performance in the palm of your hand

With Simplicity® SE Controls, all alarm and diagnostic data can be transmitted directly to an on-site PC or over a local Wi-Fi® connection – you can even monitor the system over the Internet using a Web browser.

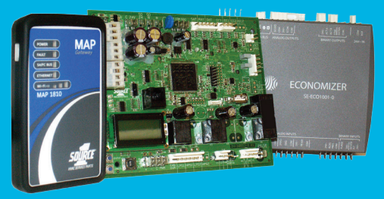

- Thermostat ready – No configuration required
- Wi-Fi® and Ethernet communications via optional Mobile Access Portal (MAP) Gateway
- Optional Fault Detection and Diagnostics (FDD) for entire refrigeration circuit and economizer (Title 24 Compliant)
- Onboard LCD
- Plug and Play Feature additions in the field
- Auto-configuration
- Factory-configured and Tested – No field programming required
- Self-test Diagnostic Startup Report
- Data Logging to removable memory (USB)
- Multi-protocol Capability
- SMART Device Tools (Mobile Access Portal Gateway)
- Fault "messages" instead of fault "codes"
- Single-zone VAV, VFD, Intelli*Speed*™ functionality
- BTL Certified

Commercial Gas Water Heaters

CYCLONE® Mxi MODULATING

MODULATING BURNER ADVANCES THE CYCLONE TO HIGHER LEVELS OF EFFICIENCY

The full line of A. O. Smith Cyclone Mxi condensing water heaters has been designed to provide years of dependable service and feature industry leading technology. Models are available from 120,000 to 500,000 Btu/h and all deliver thermal efficiencies of 95% and higher. The unique helical coil heat exchanger limits weld joints for optimal service life while maximizing heat transfer.

Cyclone is the industry leader in high efficiency commercial water heating. The current Mxi modulating models adjust firing rate to the specific demand further increasing efficiency and money savings.

INTELLIGENT CONTROL SYSTEM WITH TOUCH SCREEN DISPLAY AND ICOMM CONNECTIVETY ONBOARD*

- Exclusive A. O. Smith designed touch display control system
- Provides detailed water heater status information
- Precise temperature control adjustable from 90 to 180 degrees
- Built-in diagnostics
- Run history information
- *Cyclone Mxi models manufactured March 1, 2018 to present come standard with iCOMM Wi-Fi connectivety onboard. Remotely monitor and adjust the water heater via the A. O. Smith app. No charge connectivety using Wi-Fi or Ethernet connection.

SUBMERGED COMBUSTION CHAMBER, WITH HELICAL HEAT EXCHANGER COIL

- Positioned in center of tank, surrounded by water to virtually eliminate radiant heat loss from chamber
- Direct spark ignition
- Spiral heat exchanger keeps hot burner gases swirling, uses centrifugal force to maximize efficiency of heat transfer to water in tank
- Spiral heat exchanger reduces lime scale from forming on water-side surfaces, which maintains energy efficiency over time

POWERED ANODES STANDARD ON ALL MODELS

- Provides long-lasting tank protection in varying water conditions
- Powered anodes are non-sacrificial
- Automatically adjusts output needed to properly protect the tank

PERMAGLAS® ULTRA COAT™ GLASS LINING

- Glass coating is applied using a liquid slush coating technique to ensure uniform coating
- Heat exchanger coil is glassed both externally and internally for optimum protection

MECHANICAL VENTING VERSATILITY

- Conventional power venting or direct venting
- Vents vertically or through a sidewall
- Front located exhaust and condensate connections allow for easy install and access
- Vents with low cost PVC Schedule 40 intake and exhaust pipe. Approved for optional CPVC Schedule 40, Polypropylene and AL29-4C stainless steel vent materials
- Direct-vent intake and exhaust pipe can terminate separately outside building or through single opening, using concentric vent assembly
- Canadian installations require ULC S636 PVC/CPVC, ULC S636 Polypropylene and AL29-4C stainless steel pipe for intake and exhaust

HIGH EFFICIENCY MODULATING PRE-MIX POWERED BURNER

- Down-fired pre-mix burner provides optimum efficiency and quiet operation
- Top-mounted burner position prevents condensation from affecting burner operation

3-YEAR LIMITED TANK / 1-YEAR LIMITED PARTS WARRANTY

- For complete warranty information, consult written warranty or go to hotwater.com.

BTH-120(A) THROUGH BTH-500(A)
MODEL SHOWN:
BTH-199(A) SERIES 300/301

Low Lead Content · ENERGY STAR · CERTIFIED UL WATER QUALITY · ASME HLW · GAS-FIRED c UL us LISTED · iCOMM · AHRI CERTIFIED www.ahridirectory.org · ASME (Optional)

©February 2018 A. O. Smith Corporation. All Rights Reserved

www.hotwater.com | 800-527-1953 Toll-Free USA | A. O. Smith Corporation | 500 Tennessee Waltz Parkway | Ashland City, TN 37015

OTHER FEATURES:

SPACE-SAVING DESIGN FOR INSTALLATION FLEXIBILITY

- Easy-to-remove top cover for convenient access to serviceable parts
- 0″ installation clearances on sides and rear, 1-1/2″ installation clearance on top
- Handhole cleanout allows easy access to tank interior for cleaning
- 0″ clearance to combustibles, approved for installation on combustible floors

CODES AND STANDARDS

- CSA certified and ASME rated T&P relief valve
- Maximum hydrostatic working pressure: 160 psi
- All models are design certified by Underwriters Laboratories (UL), Inc., to ANSI Z21.10.3 - CSA 4.3 Standards
- Meets the thermal efficiency and standby loss requirements of the U.S. Department of Energy and current edition ASHRAE/IES 90.1
- Design Certified by Underwriters Laboratories to NSF standard 5 for 180°F (62°C) water
- Complies with SCAQMD Rule 1146.2 and other Air Quality Management Districts with similar requirements for ultra low-NOx emissions
- ASME tank construction optional on 120-500 model sizes

VENT REQUIREMENTS FOR BTH 120(A) - 250(A)

Number of 90° Elbows Installed	3 Inch Pipe	4 Inch Pipe
	Maximum Feet (Meters)	Maximum Feet (Meters)
One (1)	45 feet (13.7 meters)	115 feet (35 meters)
Two (2)	40 feet (12.2 meters)	110 feet (33.5 meters)
Three (3)	35 feet (10.7 meters)	105 feet (32 meters)
Four (4)	30 feet (9.1 meters)	100 feet (30.5 meters)
Five (5)	N/A	95 feet (29 meters)
Six (6)	N/A	90 feet (27.4 meters)

VENT REQUIREMENTS FOR BTH 300(A) - 500(A)

Number of 90° Elbows Installed	4 Inch Pipe	6 Inch Pipe
	Maximum Feet (Meters)	Maximum Feet (Meters)
One (1)	65 feet (19.8 meters)	115 feet (35 meters)
Two (2)	60 feet (18.2 meters)	110 feet (33.5 meters)
Three (3)	55 feet (16.8 meters)	105 feet (32 meters)
Four (4)	50 feet (15.2 meters)	100 feet (30.5 meters)
Five (5)	45 feet (13.7 meters)	95 feet (29 meters)
Six (6)	40 feet (12.2 meters)	90 feet (27.4 meters)

GAS PRESSURE REQUIREMENTS

Model Number	Manifold Pressure		Minimum Supply Pressure		Maximum Supply Pressure	
	Natural Gas	Propane Gas	Natural Gas	Propane Gas	Natural Gas	Propane Gas
BTH-120(A)	0"W.C. (0 kPa)	0"W.C. (0 kPa)	3.5"W.C. (1.10 kPa)	8.5"W.C. (2.12 kPa)	14"W.C. (3.49 kPa)	14"W.C. (3.49 kPa)
BTH-150(A)	0"W.C. (0 kPa)	0"W.C. (0 kPa)	3.5"W.C. (1.10 kPa)	8.5"W.C. (2.12 kPa)	14"W.C. (3.49 kPa)	14"W.C. (3.49 kPa)
BTH-199(A)	0"W.C. (0 kPa)	0"W.C. (0 kPa)	3.5"W.C. (1.10 kPa)	8.5"W.C. (2.12 kPa)	14"W.C. (3.49 kPa)	14"W.C. (3.49 kPa)
BTH-250(A)	0"W.C. (0 kPa)	0"W.C. (0 kPa)	3.5"W.C. (1.10 kPa)	8.5"W.C. (2.12 kPa)	14"W.C. (3.49 kPa)	14"W.C. (3.49 kPa)
BTH-300(A)	0"W.C. (0 kPa)	0"W.C. (0 kPa)	4.8"W.C. (1.19 kPa)	8.5"W.C. (2.12 kPa)	14"W.C. (3.49 kPa)	14"W.C. (3.49 kPa)
BTH-400(A)	0"W.C. (0 kPa)	0"W.C. (0 kPa)	4.8"W.C. (1.19 kPa)	8.5"W.C. (2.12 kPa)	14"W.C. (3.49 kPa)	14"W.C. (3.49 kPa)
BTH-500(A)	0"W.C. (0 kPa)	0"W.C. (0 kPa)	4.8"W.C. (1.19 kPa)	8.5"W.C. (2.12 kPa)	14"W.C. (3.49 kPa)	14"W.C. (3.49 kPa)

Depending on the installed equivalent length, and/or the number of appliances connected, the supply gas line size may need to be increased beyond the minimum required size.

Commercial Gas Water Heaters

BTH 120-250

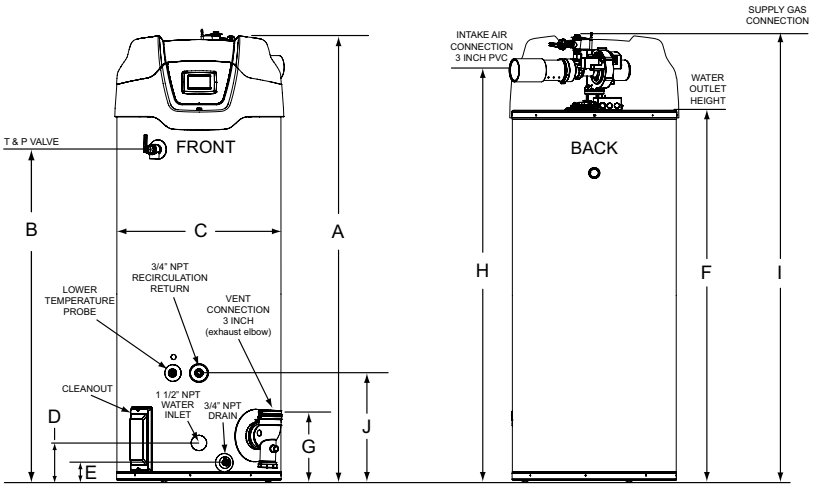

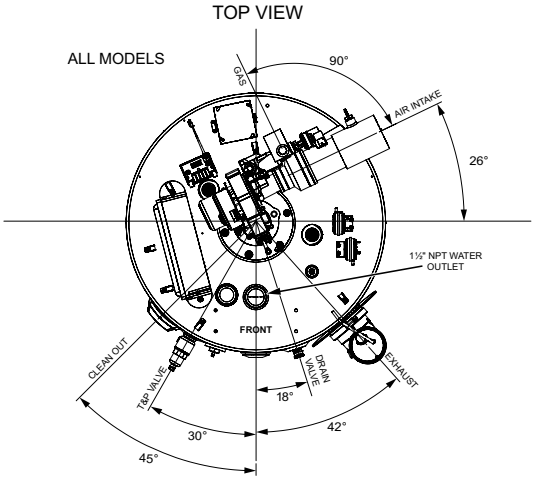

* Center line of water outlet on top of the water heaters is approximately 7 inches from the front edge of the water heater

Model Number	Approx. Capacity		Dimensions										lb/kg	Approx. Shipping Weight Std	Approx. Shipping Weight ASME
			A	B	C	D	E	F	G	H	I	J			
BTH-120(A)	Gallons	60	55 1/2	35	27 3/4	6 5/16	3	42 1/4	11 1/4	48 1/2	53 1/2	18 1/4	lb	460	490
	Liters	227	141	88.9	70.5	16	7.62	107.32	28.6	123.2	135.9	46.36	kg	208	220
BTH-150(A)	Gallons	100	76 1/2	56 3/8	27 3/4	6 5/16	3	64	11 1/4	70	75 1/2	18 1/4	lb	523	553
	Liters	379	194.9	143.2	70.5	16	7.62	162.6	28.6	177.8	191.8	46.36	kg	237	251
BTH-199(A)	Gallons	100	76 1/2	56 3/8	27 3/4	6 5/16	3	64	11 1/4	70	75 1/2	18 1/4	lb	523	553
	Liters	379	194.9	143.2	70.5	16	7.62	162.6	28.6	177.8	191.8	46.36	kg	237	251
BTH-250(A)	Gallons	100	76 1/2	56 3/8	27 3/4	6 5/16	3	64	11 1/4	70	75 1/2	18 1/4	lb	523	553
	Liters	379	194.9	143.2	70.5	16	7.62	162.6	28.6	177.8	191.8	46.36	kg	237	251

Electrical characteristics-120V-60Hz A.C., 5.0 A
"A" in model represents ASME construction
Propane gas models available
Dimensions and specifications subject to change without notice in accordance with our policy of continuous product improvement.

Commercial Gas Water Heaters

BTH 300-500

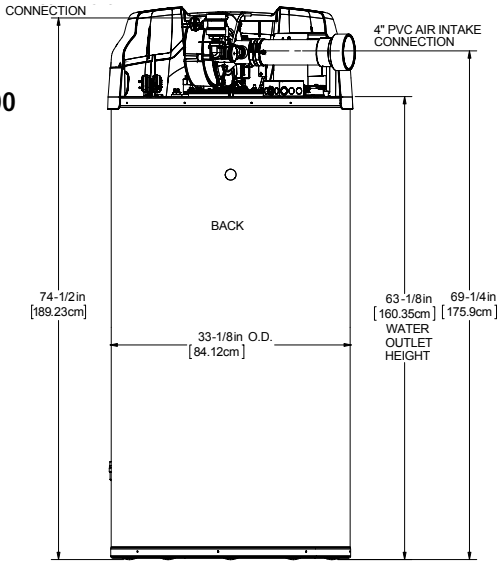

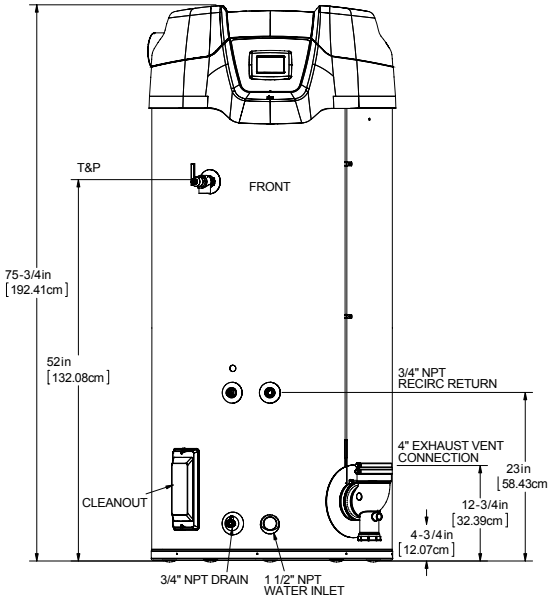

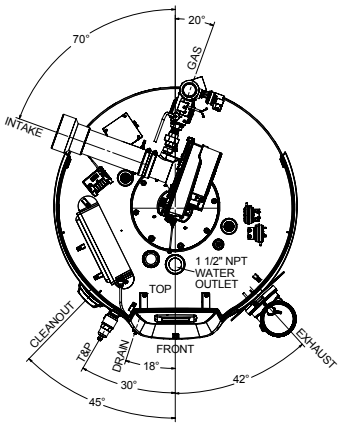

Model Number	Approx. Capacity		Dimensions										lb/kg	Approx. Shipping Weight Std	Approx. Shipping Weight ASME
			A	B	C	D	E	F	G	H	I	J			
BTH-300(A)	Gallons	119	75 3/4	52	33 1/8	4 3/4	4 3/4	63 1/8	12 3/4	69 1/4	74 1/2	23	lb	855	855
	Liters	450.96	192.41	132.08	84.12	12.07	12.07	160.35	32.39	175.9	189.23	58.43	kg	387	387
BTH-400(A)	Gallons	119	75 3/4	52	33 1/8	4 3/4	4 3/4	63 1/8	12 3/4	69 1/4	74 1/2	23	lb	855	855
	Liters	450.96	192.41	132.08	84.12	12.07	12.07	160.35	32.39	175.9	189.23	58.43	kg	387	387
BTH-500(A)	Gallons	119	75 3/4	52	33 1/8	4 3/4	4 3/4	63 1/8	12 3/4	69 1/4	74 1/2	23	lb	855	855
	Liters	450.96	192.41	132.08	84.12	12.07	12.07	160.35	32.39	175.9	189.23	58.43	kg	387	387

Electrical characteristics-120V-60Hz A.C., 5.0 A
"A" in model represents ASME construction
Propane gas models available
Dimensions and specifications subject to change without notice in accordance with our policy of continuous product improvement.

RECOVERY CAPACITY

Model Number	Type of Gas	Input		Thermal Efficiency
		BTU/HR	kW	
BTH-120(A)	Natural/Propane	120,000	35	95%
BTH-150(A)	Natural/Propane	150,000	44	98%
BTH-199(A)	Natural/Propane	199,900	58	97%
BTH-250(A)	Natural/Propane	250,000	73	96%
BTH-300(A)	Natural/Propane	300,000	88	96%
BTH-400(A)	Natural/Propane	399,900	117	95%
BTH-500(A)	Natural/Propane	499,900	146	95%

Model Number	U.S. GALLONS/HR AND LITRES/HR AT TEMPERATURE RISE INDICTATED													
	Approx. Capacity	°F	30°F	40°F	50°F	60°F	70°F	80°F	90°F	100°F	110°F	120°F	130°F	140°F
		°C	17°C	22°C	28°C	33°C	39°C	44°C	50°C	56°C	61°C	67°C	72°C	78°C
BTH-120(A)	60 U.S. Gals.	GPH	461	345	276	230	197	173	154	138	126	115	106	99
	227 Litres	LPH	1743	1308	1046	872	747	654	581	523	475	436	402	374
BTH-150(A)	100 U.S. Gals.	GPH	594	445	356	297	255	223	198	178	162	148	137	127
	379 Litres	LPH	2248	1686	1349	1124	963	843	749	674	613	562	519	482
BTH-199(A)	100 U.S. Gals.	GPH	783	588	470	392	336	294	261	235	214	196	181	168
	379 Litres	LPH	2965	2224	1779	1483	1271	1112	988	890	809	741	684	635
BTH-250(A)	100 U.S. Gals.	GPH	970	727	582	485	416	364	323	291	264	242	224	208
	379 Litres	LPH	3670	2753	2202	1835	1573	1376	1223	1101	1001	918	847	786
BTH-300(A)	119 U.S. Gals.	GPH	1164	873	698	582	499	436	388	349	317	291	269	249
	450.96 Litres	LPH	4405	3304	2643	2202	1888	1652	1468	1321	1201	1101	1017	944
BTH-400(A)	119 U.S. Gals.	GPH	1535	1151	921	767	658	576	512	460	419	384	354	329
	450.96 Litres	LPH	5810	4358	3486	2905	2490	2179	1937	1743	1585	1453	1341	1245
BTH-500(A)	119 U.S. Gals.	GPH	1919	1439	1151	959	822	720	640	576	523	480	443	411
	450.96 Litres	LPH	7263	5448	4358	3632	3113	2724	2421	2179	1981	1816	1676	1556

Recovery capacities are based on AHRI rated thermal efficiencies.
For ASME Construction add an "A" to the end of the model number ex: BTH-120A.

STORAGE CAPACITY

Model Number	U.S. Gallons	Liters
BTH 120	60	227
BTH 150	100	379
BTH 199	100	379
BTH 250	100	379
BTH 300	119	450.96
BTH 400	119	450.96
BTH 500	119	450.96

GAS LINE CONNECTION SIZE

Model	Series	Natural Gas	Propane Gas
BTH 120	300/301	3/4" NPT	3/4" NPT
BTH 150	300/301	3/4" NPT	3/4" NPT
BTH 199	300/301	3/4" NPT	3/4" NPT
BTH 250	300/301	3/4" NPT	3/4" NPT
BTH 300	300/301	1-1/2" NPT	1-1/2" NPT
BTH 400	300/301	1-1/2" NPT	1-1/2" NPT
BTH 500	300/301	1-1/2" NPT	1-1/2" NPT

OPTIONAL KITS

OPTIONAL CONCENTRIC VENT KITS

- BTH-120 - 250 vent kit p/n 100111100
- BTH-300 - 500 vent kit p/n 100113124

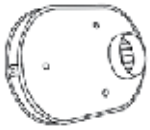

OPTIONAL LOW PROFILE TERMINATION VENT KITS

- 3″ Flush Mount Vent Kit p/n 100187887
- 4″ Flush Mount Vent Kit p/n 100187888
- 6″ Flush Mount Vent Kit p/n 100187889

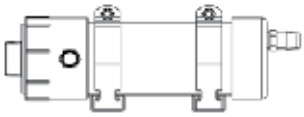

OPTIONAL CONDENSATE NEUTRALIZATION KITS

- BTH-120-199 kit p/n 100112380
- BTH-250-500 kit p/n 100112381

COMMON VENTING KITS FOR UP TO 3 WATER HEATERS (ONE KIT PER WATER HEATER REQUIRED)

Kit	Description
100227396	PVC Common Vent Kit, 120 – 250 Models
100223775	PVC Common Vent Kit, 300 – 500 Models
100227395	Polypropylene Common Vent Kit, 120 -250 Models
100223774	Polypropylene Common Vent Kit, 300 - 500 Models

Installations must comply with all national, state and local codes.
See kit instructions and corresponding water heater manual for detailed installation instructions and additional information.
50 Feet maximum equivalent length of straight pipe common vent and elbows
NOTE: Order 1 kit for each water heater.
See the Common Vent Kit manual or spec sheet for detailed information.

SPECIFICATION

(Natural or Propane) gas water heater(s) shall be A. O. Smith Cyclone Mxi model # _____ or equal, minimum 95% thermal efficiency, a storage capacity of _____ gallons, an input rating of _____ BTUs per hour, a recovery rating of _____ gallons per hour (gph) at 100°F rise and a maximum hydrostatic working pressure of 160 psi. Water heater(s) shall: 1. Modulating gas burner that automatically adjusts the input based on demand. 2. Powered anodes that are non sacrificial and maintenance free. 3. Have seamless glass-lined steel tank construction, with glass lining applied to all water-side surfaces after the tank has been assembled and welded; 4. Meets the thermal efficiency and/or standby loss requirements of the U. S. Department of Energy and current edition of ASHRAE/IES 90.1; 5. Have foam insulation and a CSA Certified and ASME rated T&P relief valve; 6. Have a down-fired power burner designed for precise mixing of air and gas for optimum efficiency, requiring no special calibration on start-up; 7. Be approved for 0″ clearance to combustibles.

The control shall be an integrated solid-state temperature and ignition control device with integral diagnostics, graphic user interface, fault history display, and shall have digital temperature readout. No charge connectivety shall be provided allowing for remote viewing and fault notificaion via app. 1. All models are design certified by Underwriters Laboratories (UL), Inc., according to ANSI Z21.10.3 - CSA 4.3 standards governing storage type water heaters; 2. Meet the thermal efficiency and standby loss requirements of the U. S. Department of Energy and current edition ASHRAE/IES 90.1. Complies with SCAQMD Rule 1146.2 and other air quality management districts with similar requirements for low NOx emissions.

120K-250K BTU Input: For Standard Power Venting: Water heater(s) shall be suitable for power venting using a (3″ or 4″) _____ diameter PVC pipe for a total distance of (50 ft or 120 ft.) _____ equivalent feet of vent piping. For Power Direct Venting: Water heater(s) shall be suitable for power direct venting using a (3″ or 4″) _____ diameter PVC pipe for a total distance of (50 ft or 120 ft.) _____ equivalent feet of vent piping and (50 ft. or 120 ft.)_____ equivalent feet of intake air piping.

300K - 500K BTU Input: For Standard Power Venting: Water heater(s) shall be suitable for standard power venting using a (4″ or 6″)_____ diameter PVC pipe for a total distance of (70 ft. or 120 ft.)_____ equivalent feet of vent piping. For Power Direct Venting: Water heater(s) shall be suitable for power direct venting using a (4″ or 6″) _____ diameter PVC pipe for a total distance of (70 ft or 120 ft.) _____ equivalent feet of vent piping and (70 ft. or 120 ft.)_____ equivalent feet of intake air piping.

Operation of the water heater(s) in a closed system where thermal expansion has not been compensated for (with a properly sized thermal expansion tank) will void the warranty.

For Technical Information, call 800-527-1953. A. O. Smith Corporation reserves the right to make product changes or improvements without prior notice.

©February 2018 A. O. Smith Corporation. All Rights Reserved

COMMERCIAL
HEAT PUMP WATER HEATERS

CHP SERIES
FULLY INTEGRATED HEAT PUMP WATER HEATER

The CHP-120 heat pump water heater is an integrated system designed specifically for the commercial market.

FEATURES

ENERGY SAVING AND ENVIRONMENTALLY FRIENDLY

- Heat pump transfers heat from surrounding area into the tank
- Industry leading 4.2 COP
- Multiple operating modes maximizes efficiency while meeting specific hot water needs
- Large capacity tank enables heat pump to operate more frequently than electric elements, saving money for the end user
- Meets the standby loss requirements of U.S. Department of Energy and the current edition of ASHRAE 118.1
- Environmentally friendly R-134a refrigerant
- ENERGY STAR® Qualified

COMMERCIAL PERFORMANCE

- First hour delivery of 179 GPH
- Rated heat pump power of 3.15 HP (240Vac) or 3.05 (208Vac)
- Electric heating element capacity of 12 kW (240Vac) or 9 kW (208Vac)
- Max water temperature of 150°F in efficiency/ Hybrid modes and 180°F in electric mode
- Operating ambient range of 40-110° F
- Low operating sound measured at 59 dB (A)
- Dual evaporator fans maximize performance and provide room cooling
- 3/4" NPT water inlet and outlet

EASE OF OPERATION

- Integrated design and pre-charged refrigeration system makes for quick and easy install
- Large touch screen LCD display allows for mode selection, provides run information and includes troubleshooting alerts and detail
- Choose from three operating modes: Efficiency, Hybrid or Electric

DEPENDABLE AND LONG LASTING DESIGN

- A. O. Smith-developed glass coated tank
- Tank rated at 160 PSI working pressure
- Commercial grade anode protects the tank and extends the service life
- Proven heat pump technology
- Electric elements have incoloy sheathing and provide excellent protection from oxidation and scaling

THREE YEAR LIMITED TANK WARRANTY

- Backed by 3-year tank and 1-year parts/ compressor limited warranties
- For complete warranty information, consult written warranty or go to hotwater.com

MODEL CAHP 120

© April 2023 A. O. Smith Corporation. All rights reserved.

COMMERCIAL
HEAT PUMP WATER HEATERS

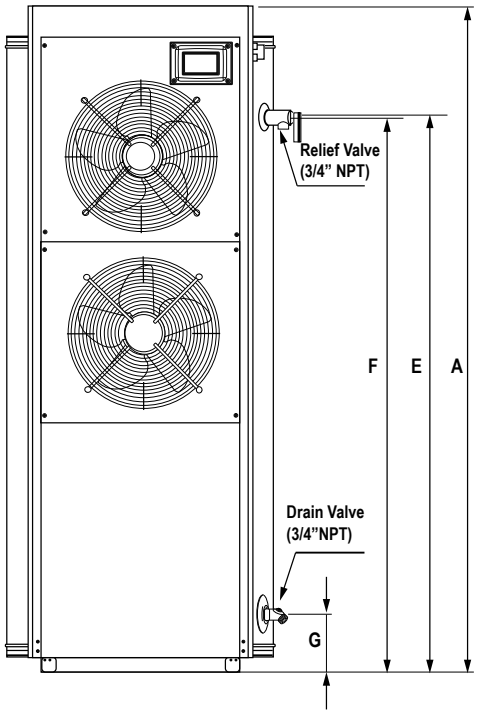

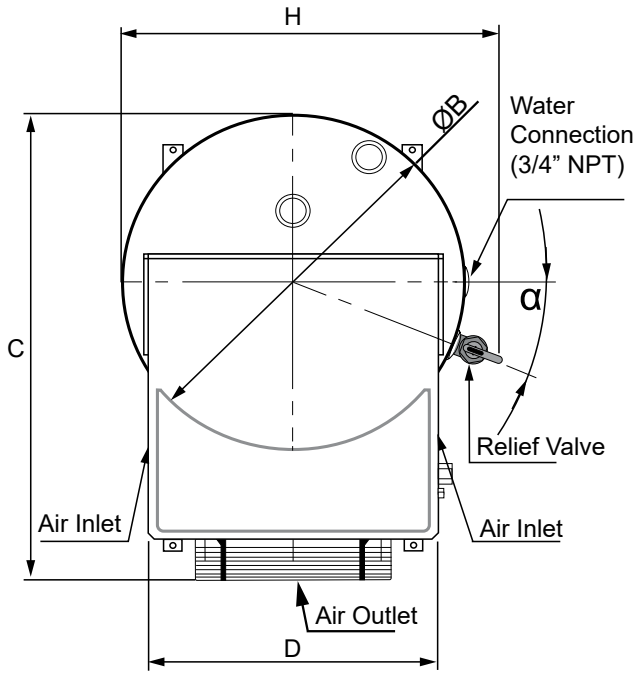

ROUGH-IN DIMENSIONS

Physical Dimensions								
Total Height (A)	Tank Diameter (B)	Maximum Depth (C)	Service Panel Width (D)	Relief Valve Height (E)	Water Outlet Height (F)	Water Inlet Height (G)	Relief Valve Angle α (°)	Maximum Width (H)
69 11/16	28 1/32	39 11/64	23 5/8	58 7/64	57 51/64	6 1/32	22	30 29/32

MODEL SPECIFICATIONS

Model Number	Nominal Capacity	COP	Number of Elements	Total Element Wattage (both elements at 240V)	First Hour Delivery in Hybrid Mode (Gallons)	Recovery in GPH at 100° Temperature Rise in Hybrid Mode	Depends on mode of operation per chart below:	Approx. Shipping Weight (lbs)
CAHP 120	119	4.2	2	12,000	179	90	Efficiency = 41 Hybrid = 90 Electric = 50	620

COMMERCIAL
HEAT PUMP WATER HEATERS

RECOVERY CAPACITIES

Recovery Rate In Gallons Per Hour

Mode of Operation	Input		Temperature Rise °F												
	BTU/ Hour	kW	°F	30°F	40°F	50°F	60°F	70°F	80°F	90°F	100°F	110°F	120°F	130°F	140°F
			°C	17°C	22°C	28°C	33°C	39°C	45°C	50°C	56°C	61°C	67°C	72°C	78°C
Efficiency	33,678	10	GPH	136	102	82	68	58	51	45	41	37	34	31	29
			LPH	515	386	309	258	221	193	172	155	140	129	119	110
Hybrid	74,624	22	GPH	302	226	181	151	129	113	101	90	82	75	70	65
			LPH	1141	856	685	571	489	428	380	342	311	285	263	245
Electric	40,946	12	GPH	165	124	99	83	71	62	55	50	45	41	38	35
			LPH	626	470	376	313	268	235	209	188	171	157	145	134

Technical Characteristics

Model Type	Integrated Heat Pump Water Heater	
COP	4.2	
HP Rated Input Power	3.15 HP (2.35 kW)	
HP Rated Heating Output Capacity	11.13 kW	
Power Specification	208/240Vac ~ 60Hz 1Ph	
Maximum Operation Current	67 A	
Refrigerant	R134a	
Refrigerant Charge Quantity	3.3 Lbs (1.5 Kg)	
Electrical Heating Capacity	12.0 kW @ 240Vac and 9.0 kW @ 208Vac	
Measured Tank Capacity	111.76 Gal (423 L)	
Operation Modes	Efficiency, Hybrid, Electric	
Max. Water Temperature	Efficiency/Hybrid	Electric
	150°F (66°C)	180°F (82°C)
Operating Ambient Temperature	40 - 110°F (4.4 - 43.3°C)	
Unit Operation Noise	59 dB (A)	
Approx. Heater Weight	498 Lbs (226 Kg)	
Approx. Shipping Weight	620 Lbs (281 Kg)	

Installation Key Considerations	
Service clearances	A service clearance of 24 inches should be maintained from serviceable parts such as the T&P valve, control system components, drain valve, and anode.
Ambient air temperature	In Efficiency Mode the ambient air temperature must be above 40°F and below 110°F
Room size requirement	Recommended to have a minimum installation space of approximately 3,200 cubic feet. Installation spaces less than the recommended could result in reduced water heater efficiency and performance. If the water heater is installed in a confined space with less than 3,200 cubic feet, provisions should be made to ensure sufficient airflow, such as installing louvered grills or fully louvered doors to ensure the most efficient operation of the water heater. Failure to do so could result in reduced heater efficiency and performance.
Amperage/Overcurrent protection	This water heater requires a 208 or 240 VAC single phase power supply. 208V requires 80 amp power supply at 60 Hz; 240V requires 90 amp power supply at 60 Hz.
Condensate draining	This water heater produces condensate and must be properly drained.
Ducting	There is not an optional ducting kit. Discharge air from the front of the water heater must be into a suitable room.
Indoor/Outdoor	This water heater is approved for indoor use only.
This is a partial list. Please reference the Installation Manual for detailed installation considerations.	

SUGGESTED SPECIFICATION

The heater(s) shall be Commercial Heat Pump Model Number CAHP 120 as manufactured by A. O. Smith Water Products Company or equivalent. Heater(s) shall be rated at 12 kW @ 240V or 9 kW @ 208V, single phase, 60 cycle AC as listed by Underwriters' Laboratories. All models meet National Sanitation Foundation NSF-5 requirements. Water heater shall have LCD display with built-in diagnostic and troubleshooting information. Tank(s) shall be 119 gallon capacity with 160 psi working pressure and equipped with a commercial grade anode. All internal surfaces of the heater(s) exposed to water shall be glass-lined with an alkaline borosilicate composition that has been fused to steel by firing at a temperature range of 1400°F to 1600°F. Internal power circuit fusing shall be provided. The heat pump water heater shall be capable of operating in Efficiency, Hybrid or Electric only modes. 3/4" NPT inlet and outlet water connections shall be provided. The water heater tank shall have a three year limited warranty; the compressor, refrigeration components and all other parts shall have a one year limited warranty. Fully illustrated instruction manual to be included. Meets or exceeds the efficiency and standby loss requirements of the U.S. Department of Energy and current edition of ASHRAE 118.1.

For technical information, call 800-527-1953. A. O. Smith Corporation reserves the right to make product changes or improvements without prior notice.

© April 2023 A. O. Smith Corporation. All rights reserved.

CREST® CONDENSING BOILER

HIGH EFFICIENCY COMMERCIAL BOILERS

12 MODELS FROM 750,000 TO 6.0 MILLION BTU/HR

UP TO 96.2% THERMAL EFFICIENCY

UP TO 25:1 TURNDOWN RATIO

SMART TOUCH™ OPERATING CONTROL

CONXUS® REMOTE CONNECT

NOW AVAILABLE WITH REALTIME O_2 FEEDBACK™

RIDE THE LOCHINVAR WAVE™

DESIGNED ★ ENGINEERED ★ ASSEMBLED USA

Lochinvar®

NO ONE BRINGS IT ALL TOGETHER LIKE LOCHINVAR

Lochinvar is the industry leader that other leading companies call upon for the most advanced and efficient water heating products in the world. For that reason, Lochinvar is trusted to go beyond the call of duty to find a solution for every project, no matter the size. You will not find a water heating company that works harder or cares more.

That's why no one brings it all together quite like Lochinvar.

A HISTORY OF INNOVATION

For nearly 80 years, Lochinvar, an American company, has been a leader of innovation and high-efficiency water heating. Through Lochinvar's pride in leadership and commitment to excellence, the company has continually improved year after year.

Today, Lochinvar touts the broadest line of high-efficiency water heating solutions, a world-class research & development department, comprehensive service with every sale and industry-leading training through Lochinvar University.

2011-2012

» 1.5 MILLION - 5 MILLION RELEASED

2015

» ENHANCED EFFICIENCY
» NEW MODELS
» NEW COMBUSTION TECHNOLOGY
» 96.2% EFFICIENCY ON MODELS FROM 750,000-2 MILLION BTU

2016

» 6 MILLION RELEASED

2018

» OUTDOOR MODEL RELEASED
» NEW COMBUSTION TECHNOLOGY
» 96% EFFICIENCY ON MODELS FROM 2.5-6.0 MILLION BTU

ALWAYS LEADING THE CHARGE

Introduced in 2011, the CREST® was a breakthrough product for Lochinvar. With five sizes ranging from 1.5 to 3.5 million BTU/hr and boasting a 92% thermal efficiency the CREST led the way for Lochinvar in the commercial condensing boiler industry.

A unique combustion system featuring 2 fans, 2 gas valves, and a dual chamber burner allowed the CREST to maximize turndown unlike any other product. The Wave fire tube, designed and engineered at Lochinvar, delivered robust heat transfer and set itself apart from the competition.

In 2015, the product line was enhanced by expanding the product offering down to 750,000 BTU/hr and up to 5 million BTU/hr. Along with that a new combustion system was introduced that allowed greater flexibility and more robust operation. In 2016, the 6 million BTU/hr input model was introduced making this product line broader in its capability.

Now the entire model line features a more streamline combustion system along with a greater thermal efficiency of up to 96.2%. Combined with the standard offering of CON·X·US® the CREST brings the best tools together in one product. Complete control from anywhere, installation flexibility, high turndown, and excellent serviceability are what set the CREST above the rest.

CREST®
CONDENSING BOILER

RIDE THE LOCHINVAR WAVE™
UP TO 6.0 MILLION BTU & 96.2% EFFICIENCY

With the exclusive wave fire-tube design, advancements in Lochinvar combustion technology and the SMART TOUCH™ control with CON·X·US, CREST changed how the industry thinks about fire-tube boilers. Now you have the opportunity to use all of these features in sizes ranging from 750,000 to 6.0 million BTU/hr and delivering up to 96.2% thermal efficiency.

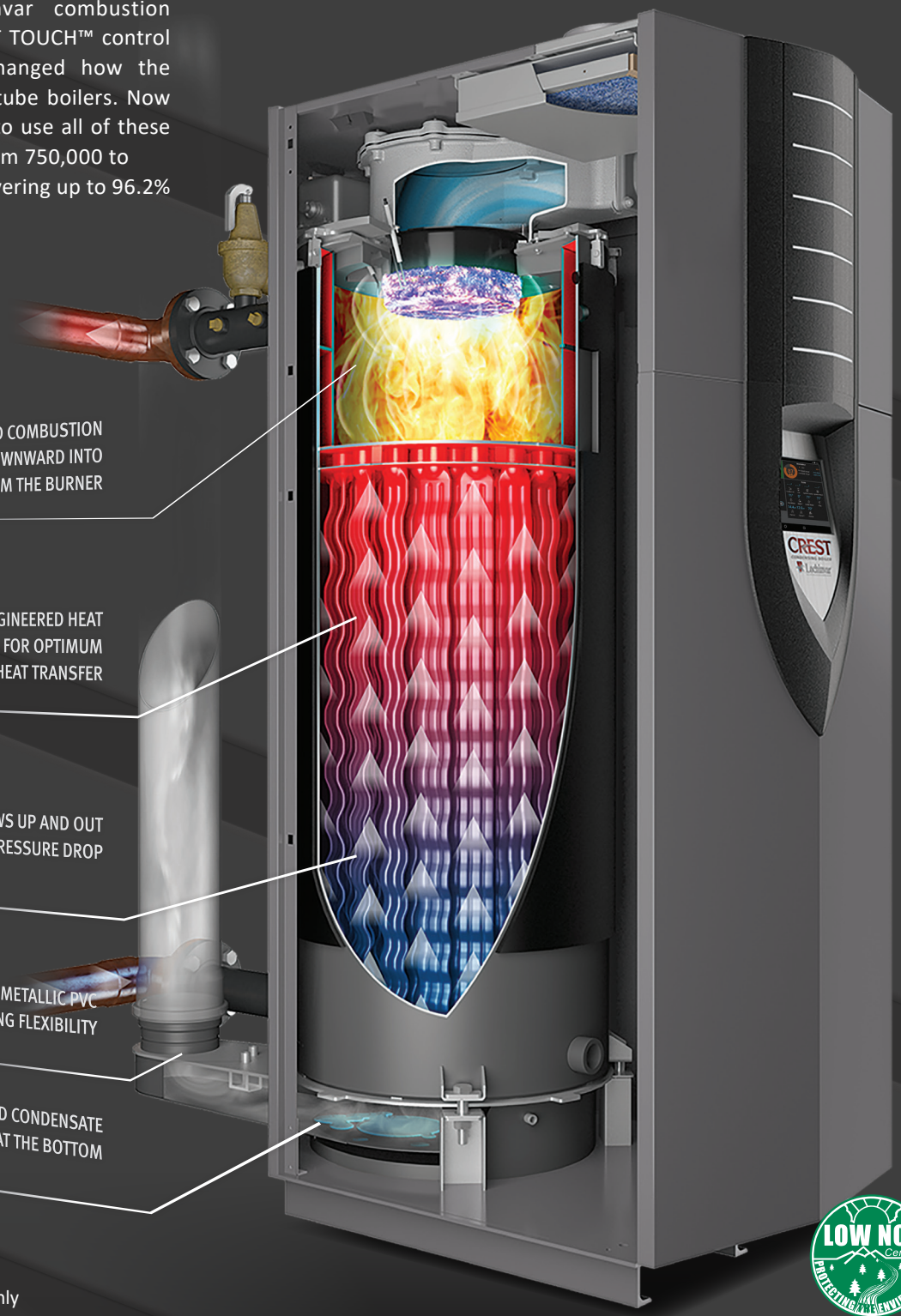

LOW NOx Certified
PROTECTING THE ENVIRONMENT

* 5.0 - 6.0 Stainless Steel Vent Only

THE CREST COMBUSTION SYSTEM

CREST boilers are equipped with a top-mounted micro-metal fiber burner, engineered specifically for fire-tube technology. The system is designed to ensure smooth, quiet modulating combustion with up to 25:1 turndown. A FBN2001 fires at its maximum 1,999,999 Btu/hr rate when the heat load is highest, and then gradually turns down to as low as 4% (80,000 Btu/hr) as load decreases. A modulating system runs smoothly and efficiently, without frequent on/off cycling. When the system is zoned, CREST's high turndown works to match the actual system demand. In return, CREST reduces the customer's fuel bill and provides better comfort by load-matching the heat loss of the system.

REDUCE INSTALLATION COST WITH VARIABLE FLOW TECHNOLOGY

CREST can operate over a wide range of flow rates with very low pressure drop. This permits installation of a full flow (variable primary) system. Installation is streamlined, without the time and materials cost of primary/secondary piping, and pumps needed to maintain flow in a water-tube boiler. Variable flow also makes CREST more flexible at handling frequent fluctuations in the system flow rate.

HIGH EFFICIENCY WITH MINIMUM SUPPLY PRESSURE

CREST operates reliably with supply gas pressure as low as 4 inches water column. Negative Regulation technology draws gas into a pre-mix combustion system, instead of relying on utility pressure through the gas valve. Operation is steady in low gas pressure systems or when peak gas supply demand occurs. Plus, Neg/Reg fan control fine-tunes the fuel/air ratio entering the burner, providing an even, cleaner-burning flame, achieving high combustion efficiency.

PEACE OF MIND, WHEN IT MATTERS MOST

Cascade redundancy provides peace of mind because it helps ensure that a CREST boiler system will always deliver reliable performance with no downtime. If the lead boiler is turned off for maintenance, cascade redundancy automatically shifts the lead role to the second sequenced boiler. Up to eight CREST boilers can be sequenced using a 2-wire daisy-chain connection. Cascade sequencing can be programmed for lead-lag or efficiency optimized operation.

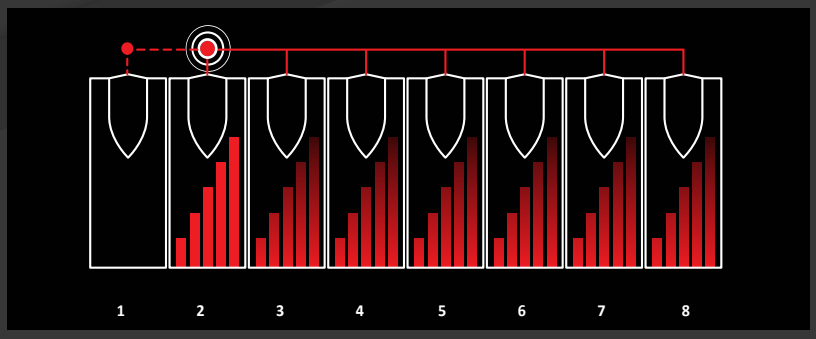

With lead-lag operation, one lead boiler modulates to capacity on demand. As load increases, the system then cascades to additional lag boilers in sequence. The first-on role shifts daily, distributing equal runtimes to each unit.

In an efficiency optimized system (see illustration above), all boilers fire and modulate simultaneously at the same Btu/hr input rates, maximizing thermal efficiency.

Lochinvar SMART TOUCH™

CREST features the next generation of Lochinvar's all-in-one SMART TOUCH™ operating control with the integration of the CON·X·US advanced technology. SMART TOUCH with CON·X·US provides outstanding functionality, and can be integrated directly into a Building Automation System via Modbus and BACnet MSTP as standard equipment.

A 8" touch screen along with an updated user interface allows users to quickly see what their unit is doing. On screen graphs can help diagnose issues in the field. A new screen saver mode identifies the status of the boiler. Dark green indicates running mode, olive green is blocking mode and red is lockout mode. This is another way Lochinvar is leading the charge with boiler controls.

INTRODUCING BOILER PLANT CONTROL, FROM ANYWHERE.

And now, the CON·X·US mobile communication platform allows the SMART TOUCH to go where no other boiler has gone before. CON·X·US provides the ability to monitor and manage multiple CREST boiler plants without ever stepping into the mechanical rooms. CON·X·US will send alerts via text or e-mail notifying of changes in system status, and anytime, from anywhere, a user can check system status and re-program boiler functions. Once downloaded, the free CON·X·US mobile application allows for remote access to all SMART TOUCH functions using any internet-capable device.

- **DO REGULAR CON·X·US CHECKS FOR ALL YOUR CREST CUSTOMERS, AND LET THEM KNOW YOU'RE MONITORING THEIR BOILER'S PERFORMANCE.**
- **ADJUST SETPOINTS, DOMESTIC HOT WATER, RESET CURVES, PUMP DELAYS AND MORE, USING THE CON·X·US INTERACTIVE DISPLAY.**
- **STATUS ALERTS VIA TEXT OR E-MAIL LET YOU KNOW WHEN A CREST BOILER NEEDS ATTENTION.**

CON·X·US®
REMOTE CONNECT

SUPERIOR FIRE-TUBE HEAT EXCHANGER DESIGN BOOSTS THERMAL EFFICIENCY

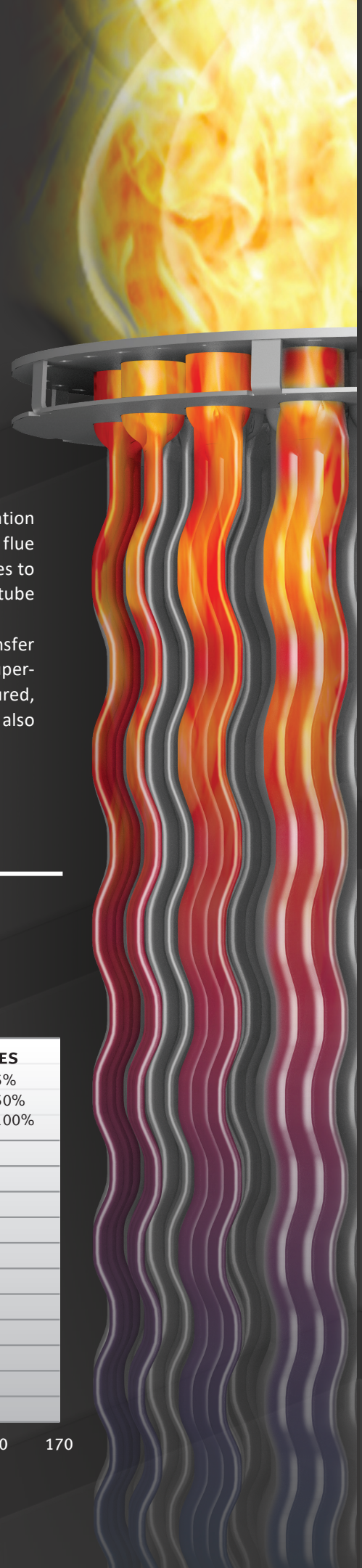

The CREST boiler takes fire-tube technology to a new level. The patented Wave configuration creates turbulence as flue gas products flow down the tube, scrubbing the energy from the flue products. The Wave design also enhances the life of the heat exchanger by allowing the tubes to flex, so they operate stress free with none of the adverse effects suffered by traditional fire-tube boilers.

Each fire tube is welded into the heat exchanger and surrounded by water, and the heat transfer process is enhanced by the water's counterflow. As water flows up inside the vessel, super-heated flue products flow down the fire tube. With one pass, heat is effectively captured, reaching condensing temperatures. At the top of the vessel, the combustion chamber is also water-backed for additional heat transfer.

CREST BOILER EFFICIENCY

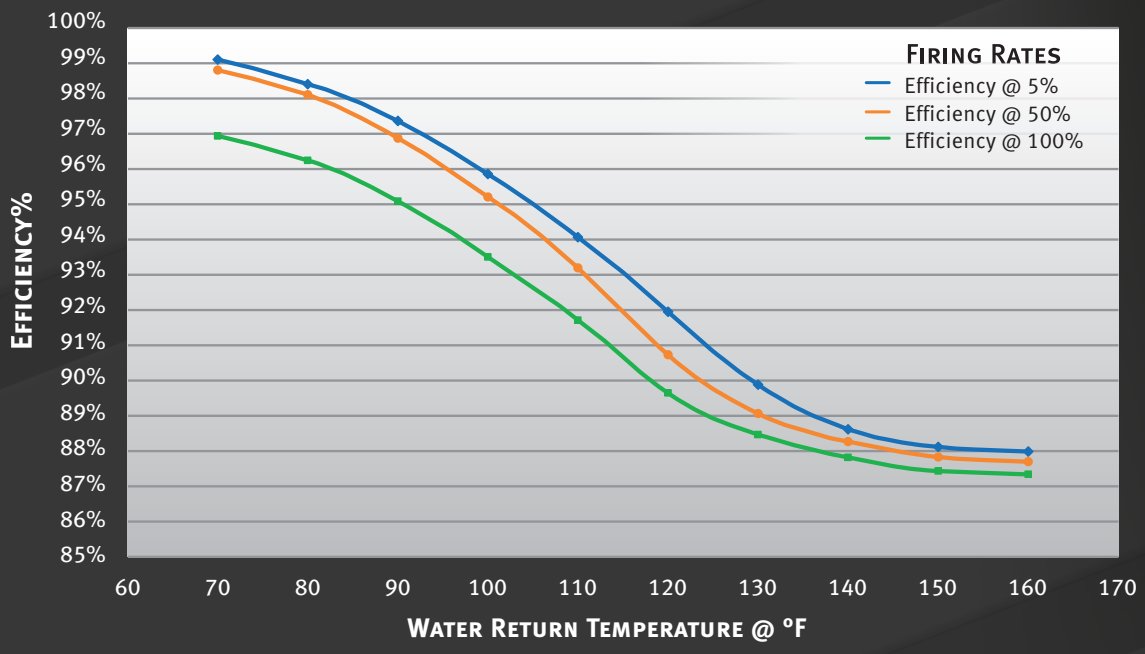

FLEXIBLE VENTING OPTIONS

CREST offers 6 venting options, and permits direct-vent air intake and exhaust runs up to 100 equivalent feet, using PVC, CPVC, polypropylene or stainless steel pipe.** Plus, multiple units can be common-vented to reduce time and materials cost.

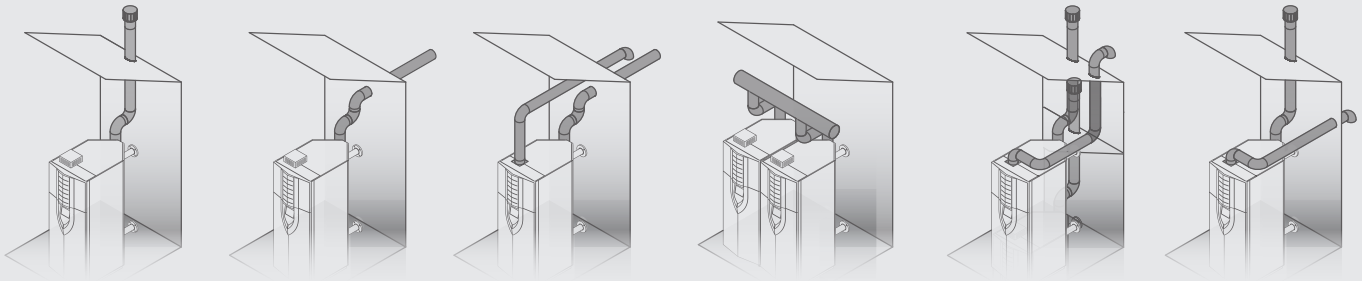

Room Air Vertical | Room Air Sidewall | Direct-Vent | Common-Vent* | Direct-Vent Vertical | Vertical w/Sidewall Air

**Contact Lochinvar for information on common venting of CREST boilers.*
*** Available for models FB 0751-4001. Stainless steel pipe only for models FB 5001-6001.*

SMART TOUCH FUNCTIONS AND FEATURES

SMART TOUCH FEATURES

›CON·X·US Remote Connect
›SMART TOUCH Touchscreen Operating Control
›Full-Color 8" Touchscreen LCD Display
›Built-in Cascading Sequencer for up to 8 Boilers
- Built-in Redundancy
- Cascade Multiple Sized Boilers
- Lead/Lag Cascade
- Efficiency Optimized Cascade

›Front-End Loading Capability with Copper-Fin II® and Power-Fin® Boilers
›Building Management System Integration with 0-10 VDC Input
›BACnet MSTP Communications
›Outdoor Reset Control with Outdoor Air Sensor
›Password Security
›Domestic Hot Water Prioritization
- DHW tank piped with priority in the boiler loop
- DHW tank piped as a zone in the system with the pumps controlled by the Smart System
- DHW Modulation Limiting
- Separately Adjustable SH/DHW Switching Times

›Low Water Flow Safety Control & Indication
›Inlet & Outlet Temperature Readout
›Freeze Protection
›Service Reminder
›Time Clock
›Data Logging
- Hours Running, Space Heating
- Hours Running, Domestic Hot Water
- Hours Running, Modulation Rate
- Ignition Attempts
- Last 10 Lockouts

›Programmable System Efficiency Optimizers
- Night Setback
- Anti-Cycling
- Outdoor Air Reset Curve
- Ramp Delay
- Boost Temperature & Time
- Modulation Factor Control

›Three Pump Control
- System Pump
- Boiler Pump
- Domestic Hot Water Pump

›High-Voltage Terminal Strip
- › 120V/1PH/60Hz (FB 0751-2001)
- › 208V/3PH/60Hz (FB 2501-3501)
- › 480V/3PH/60Hz (FB 4001-6001)

›Low-Voltage Terminal Strip
- 24 VAC Auxiliary Device Relay
- Auxiliary Proving Switch Contacts
- Alarm on Any Failure Contacts
- Runtime Contacts
- DHW Thermostat Contacts
- Unit Enable/Disable Contacts
- System Sensor Contacts
- DHW Tank Sensor Contacts
- Outdoor Air Sensor Contacts
- Cascade Contacts
- 0-10 VDC BMS External Control Contact
- 0-10 VDC Variable Speed Boiler Pump Control Contact

OPTIONAL EQUIPMENT

Alarm Bell
BMS Gateway - BACnet IP or LonWorks
Wireless Outdoor Temperature Sensor
Condensate Neutralization Kit
Common Vent Damper Kits
Motorized Isolation Valve
Variable Speed Boiler Pump
Electrical Transformer Options (Shipped Loose):
- FB 0751-2001
  - > 208V/3PH/60Hz → 120V/1PH/60Hz
  - > 480V/3PH/60Hz → 120V/1PH/60Hz
  - > 600V/3PH/60Hz → 120V/1PH/60Hz
- FB 2501-3501
  - > 480V/3PH/60Hz → 208V/3PH/60Hz
  - > 600V/3PH/60Hz → 208V/3PH/60Hz
- FB 4001-6001
  - > 208V/3PH/60Hz → 480V/3PH/60Hz
  - > 600V/3PH/60Hz → 480V/3PH/60Hz

RealTime O_2 Feedback
Modbus Communication
Short Circut Current Rating (SCCR) Options:
- FB 2501 - 6001
  - >100,000 A
  - >200,000 A

*Lochinvar should be consulted before selecting a boiler for installations having unusual piping and pickup requirements, such as intermittent system operation, extensive piping systems, etc. *The ratings have been determined under the provisions governing forced draft burners.

CODES & REGISTRATIONS

ANSI Z21.13/CSA Certified
ASME Certified, "H" Stamp / National Board
California Code Compliant
CSD1 / Factory Mutual / GE Gap Compliant
Canadian Registration Number (CRN)
South Coast Air Quality Management District Qualified (FB 0751-2001)
AHRI Certified

STANDARD FEATURES

Proof of Closure Valve (6001)
Modulating Burner with up to 25:1 Turndown
Direct-Spark Ignition
Low NOx Operation
Sealed Combustion
Air Inlet Filter
Low Gas Pressure Operation
Vertical and Horizontal Direct Venting
- > Direct Vent up to 100 Feet
- > PVC, CPVC, Polypropylene or AL29-4C (FB 0751-4001)
- > AL29-4C (FB 0751-6001)

ASME "H" Stamped Heat Exchanger
316L Stainless Steel Fire Tubes
160 psi Working Pressure
On/Off Switch
Adjustable High Limit with Manual Reset
Low Water Cutoff with Manual Reset & Test
High & Low Gas Pressure Switches w/Manual Reset
Low Air Pressure Switches
Condensate Trap w/Blocked Drain Switch
Drain Valve
System Sensor
Outdoor Air Sensor
Inlet & Outlet Temperature Sensors
High-Voltage Terminal Strip
Low-Voltage Terminal Strip
Downstream Gas Test Cocks
50 psi ASME Relief Valve
Temperature & Pressure Gauge
Zero Clearances to Combustible Materials
High Altitude Models Available
SCCR of 5,000 A
10-Year Limited Warranty (See Warranty for Details)
1-Year Warranty on Parts (See Warranty for Details)

CREST BOILER DIMENSIONS AND SPECIFICATIONS - SERIES 1**

SIDE

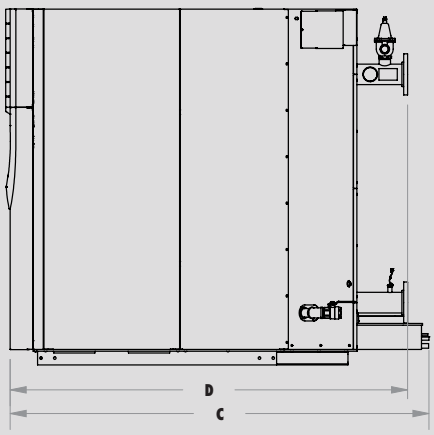

BACK

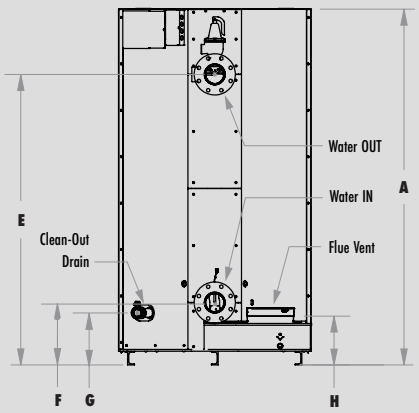

TOP

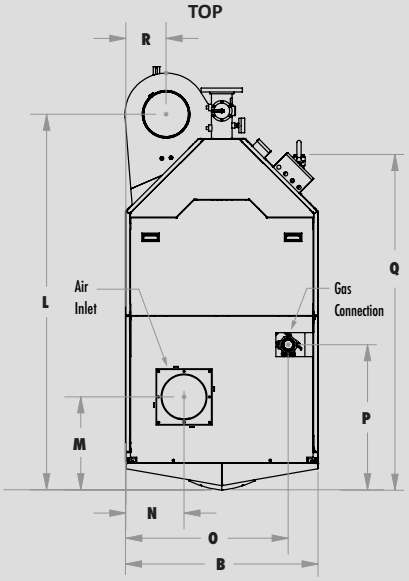

For technical information call 800-722-2101. Lochinvar LLC reserves the right to make product changes or improvements without prior notice. Dimensions are approximate and should not be used for construction purposes.

CREST HEATING BOILER — DIMENSIONS AND SPECIFICATIONS

AHRI CERTIFIED

Model Number	Input MBH Min	Input MBH Max	Turn-down	Gross Output MBH	Net AHRI Rating MBH	Combustion Efficiency	Thermal Efficiency	A	B	C	D	E	F	G	H
FB*0751	50	750	15:1	722	628	96.4%	96.2%	78"	30"	55-1/2"	57-5/8"	66-1/8"	11-7/8"	11-3/8"	11-1/4"
FB*1001	50	999	20:1	961	836	96.4%	96.2%	78"	30"	56-1/2"	57-5/8"	66-1/8"	11-7/8"	11-3/8"	11-1/4"
FB*1251	62.5	1,250	20:1	1,203	1,046	96.4%	96.2%	78"	30"	56-1/2"	57-3/4"	66-1/8"	11-7/8"	11-3/8"	11-1/4"
FB*1501	60	1,500	25:1	1,443	1,255	96.4%	96.2%	78"	30"	67-3/4"	68"	65-3/8"	12-3/8"	11-3/8"	11-1/4"
FB*1751	70	1,750	25:1	1,684	1,464	96.4%	96.2%	78"	30"	66-1/4"	68"	65-3/8"	12-3/8"	11-3/8"	11-1/4"
FB*2001	80	1,999	25:1	1,923	1,672	96.4%	96.2%	78"	30"	66-1/2"	68"	65-3/8"	12-3/8"	11-3/8"	11-1/4"
FB*2501	125	2,500	20:1	2,400	2,087	96.1%	96.0%	77-3/4"	35"	83-3/4"	83-3/4"	63-3/4"	13-1/2"	11-1/4"	10-1/2"
FB*3001	150	3,000	20:1	2,883	2,507	96.1%	96.0%	77-3/4"	35"	83-3/4"	83-3/4"	63-3/4"	13-1/2"	11-1/4"	10-1/2"
FB*3501	175	3,500	20:1	3,364	2,925	96.1%	96.0%	77-3/4"	42"	91-1/2"	86-3/4"	63-1/2"	13-1/4"	11-1/2"	10-3/4"
FB*4001	333.3	3,999	12:1	3,843	3,342	96.1%	96.0%	77-3/4"	45-1/2"	103-1/2"	99"	63-1/2"	13-3/4"	11-1/2"	10-3/4"
FB*5001	499.9	4,999	10:1	4,804	4,177	96.1%	96.0%	77-3/4"	46-1/2"	102-1/4"	99-1/2"	63-1/2"	15"	11-1/2"	10-3/4"
FB*6001	600	6,000	10:1	5,766	5,014	96.1%	96.0%	77-3/4"	50"	102-3/4"	99-3/4"	63-1/4"	14-3/4"	11-1/2"	10-3/4"

Model Number	L	M	N	O	P	Q	R	Gas Conn.	Water Inlet/ Outlet	Air Inlet	Vent Size	Oper. Weight (lbs.)	Ship. Weight (lbs.)
FB*0751	51"	13"	8-3/4"	26-3/4"	23-3/4"	49-1/2"	7-3/8"	1-1/4"	3"	6"	6"	1,768	1,560
FB*1001	51"	13"	8-3/4"	26-3/4"	23-1/8"	49-1/2"	6-1/2"	1-1/4"	3"	6"	6"	1,838	1,596
FB*1251	51-3/8"	13"	8-3/4"	26-3/4"	21-5/8"	49-1/2"	6-1/2"	1-1/2"	3"	6"	8"	1,975	1,648
FB*1501	62-3/8"	15-7/8"	9"	26-7/8"	27-7/8"	59-1/4"	5-1/8"	1-1/2"	4"	8"	8"	2,307	1,961
FB*1751	61-1/2"	15-7/8"	9"	27"	27-1/8"	58-3/4"	5-1/8"	1-1/2"	4"	8"	8"	2,458	2,017
FB*2001	61-1/2"	15-7/8"	9"	27"	26-3/4"	58-3/4"	5-1/8"	1-1/2"	4"	8"	8"	2,570	2,087
FB*2501	76-1/4"	19-3/4"	9-1/4"	28-3/4"	32"	71"	7-1/4"	2"	4"	8"	9"	3,600	2,577
FB*3001	76-1/4"	19-3/4"	9-1/4"	28-3/4"	32"	71"	7-1/4"	2"	4"	10"	10"	3,900	2,881
FB*3501	82"	20-1/4"	12-3/4"	35-1/2"	31-3/4"	73-1/4"	8-3/4"	2"	4"	10"	10"	4,600	3,218
FB*4001	94"	24-3/4"	13-1/2"	39-1/2"	42-1/4"	85-1/4"	10-1/2"	2-1/2"	4"	12"	12"	5,200	3,805
FB*5001	92-1/2"	22"	14"	39-3/4"	39-1/2"	84"	9"	2-1/2"	6"	14"	14"	5,900	4,101
FB*6001	93-1/4"	20"	15-3/4"	43-1/2"	36-1/2"	83-3/4"	9-1/4"	3"	6"	14"	14"	6,900	4,711

*Notes: *Insert "N" for natural gas, "L" for LP gas models. Indoor installation only. Lochinvar should be consulted before selecting a boiler for installations having unusual piping and pickup requirements, such as intermittent system operation, extensive piping systems, etc. The ratings have been determined under the provisions governing forced draft burners. The Net AHRI water ratings shown are based on a piping and pickup allowance of 1.15.*

Lochinvar®

Lochinvar, LLC
300 Maddox Simpson Parkway
Lebanon, Tennessee 37090
P: 615.889.8900 / F: 615.547.1000
Lochinvar.com

0751-2001

H

iPhone and iPod touch are trademarks of Apple Inc., registered in the U.S. and other countries. Android and Google are trademarks of Google Inc., registered in the U.S. and other countries. App Store is a service mark of Apple Inc. Google Play is a service mark of Google Inc.

© Lochinvar, LLC - ASB - 1K 12/2021 - Printed in U.S.A.

THE CASCADE 2 SERIES

HOT WATER STATION **SPECIFICATION SHEET**

Applications

Solar Water Heating

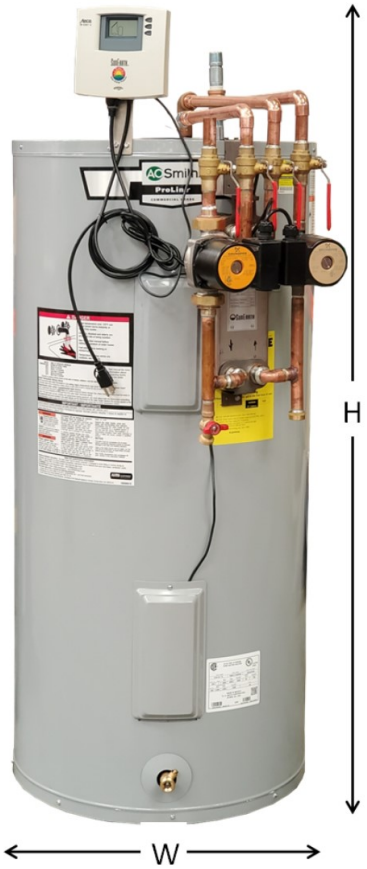

Technical Specifications:

System	
Maximum Collector Area[1]	96 ft^2
Maximum Building Height[2]	30 ft
Potable Plumbing Diameter	$^3/_4$”
Solar Electrical	
Maximum Power Input	195 Watts
Input Voltage	120 V
Backup Heating Element Electrical (Optional)	
Maximum Power Input	4500 Watts[3]
Input Voltage	240 V

[1] Collectors plumbed in parallel.
[2] Based on 20 feet of piping to the collectors.
[3] Dual elements for 50 gallon model (recommended: disable the lower element).

Materials

Tank:	Glass Lined Steel Vessel with 2” Non-CFC Foam Insulation
Heat Exchanger:	316 Stainless Steel Plates
Drainback Tank:	Copper
Plumbing:	Type M Copper Pipe
Potable Pump:	Stainless Steel Wetting Surfaces
Solar Pump:	Stainless Steel Wetting Surface

Models

Model Number	Description	Dimensions (H x L x W)	Approx. Gross Weight
100004-13-50-1	HWS Cascade 2 50 gallon	61” x 30” x 23”	211 lbs.
100004-13-65-1-6	HWS Cascade 2 65 gallon	70” x 30” x 22”	202 lbs.
100004-13-65-1-12*	HWS Cascade 2-65 gallon	70” x 30” x 22”	202 lbs.
100004-13-80-1-6	HWS Cascade 2 80 gallon	70” x 32” x 24”	241 lbs.
100004-13-80-1-12*	HWS Cascade 2-80 gallon	70” x 32” x 24”	241 lbs.
100004-13-120-1-6	HWS Cascade 2 120 gallon	74” x 38” x 28”	328 lbs.
100004-13-120-1-12*	HWS Cascade 2-120 gallon	74” x 38” x 28”	328 lbs.

* 12 year tank warranty.

Due to SunEarth’s policy of continuous product improvement, specifications are subject to change without notice.

8425 Almeria Avenue
Fontana, CA 92335 (909) 434-3100, Fax
www.sunearthinc.com

April 2020

General:

The SunEarth CASCADE 2 HWS is a ready to install, pre-engineered hot water station (HWS) designed with seamless installation in mind. Factory assembled using top tier components and tested for hydraulic integrity. The CASCADE 2 HWS contains all the components and safety devices necessary for SunEarth's high performing Drain Back indirect system. Featuring a brazed plate heat exchanger, adjustable three speed pump and manufactured by SunEarth, the CASCADE 2 HWS is the installers obvious choice.

Hot Water Station Features:

1. **Tank:** Glass lined and pressure rated the tank uses R-17 insulation and painted metal jacket. Includes a 4500 Watt heating element as a back-up for confidence in hot water availability. The storage tank is protected by a 150 psi/210°F relief valve and magnesium sacrificial anode.*
2. **Controller:** Operates the pump through differential temperature algorithms, the Liquid Crystal Display (LCD) offers insight into the system operation and condition. The controller reports temperature readings from 2 distinct locations; (T1) collector, (T2) bottom of storage tank. Optional: (T3) top of storage tank.
3. **Drain Back Reservoir:** The CopperStor represents a cost effective advance in drainback reservoir design. Fabricated from spun-end seamless copper tubing with no ferrous metal components, the CopperStor is nearly impervious to corrosion and allows for direct sweated connections without the need for troublesome dielectric unions. High temperature 15% silver brazed joints ensure high strength and are not affected by lower temperature flames used for sweating the connections. A 3/4" brass cap on the top of the units creates a simple and cost effective method for checking the fill level with a dipstick. CopperStor reservoirs are finished with a water-based matte black paint and wrapped in 1/2" Rubatex insulation to minimize heat loss and sound.
4. **Pump:** Wet-rotor type whereas the pump and motor form an integral unit without shaft seals. Solar and Potable pump utilize composite impellers with stainless steel volutes. Multiple speed settings provide the ability to tune the solar system for optimal operation rates.
5. **Heat Exchnager:** Brazed Plate Heat Exchanger manufactured from corrosion resistant 316L Stainless Steel. Channel design promotes turbulent flow for superior heat transfer through a range of flow rates. Built in stainless filters ensure scale is trapped in flush ports and into the precision fluid channels of the heat exchanger**.**

* *HWS Cascade 2-50 gallon model uses a dual heating element tank with Coreguard® anode rod and Blue Diamond® glass coating.*

Due to SunEarth's policy of continuous product improvement, specifications are subject to change without notice.

SunEarth
8425 Almeria Avenue
Fontana, CA 92335 (909) 434-3100, Fax
www.sunearthinc.com

STANDARD SEALS

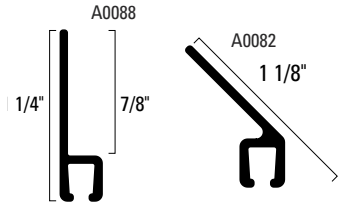

STANDARD ALUMINUM RETAINERS

Made of high-strength aluminum ore and designed to hold any ½" to 3" standard brush, rubber or vinyl seal (see pages 3, 4 & 5). Custom fabrication and secondary options include punching and assembly.
STANDARD MILL LENGTHS: 8'-2", 9'-2", 10'-2", 12'-4", 14'-4", 16'-4", 18'-4"
STANDARD BROWN & WHITE LENGTHS: 16'-4", 18'-4"

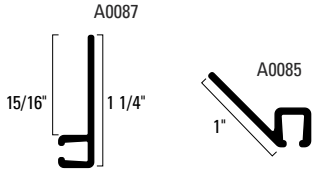

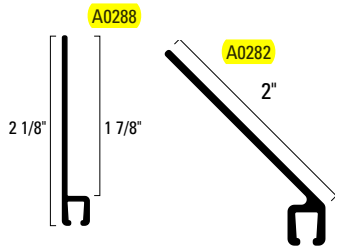

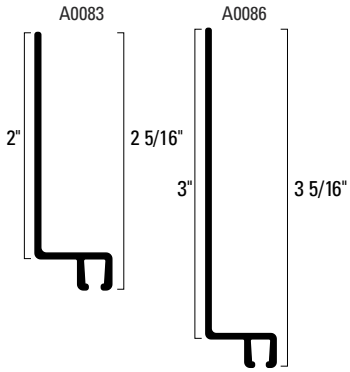

PART NUMBER	COLOR
1" STR	
A0088-MI-W	Mill
A0088-BR-W	Brown
A0088-WH-W	White
1" 45º	
A0082-MI-W	Mill
A0082-BR-W	Brown
A0082-WH-W	White
1" 90º	
A0087-MI-W	Mill
1" Reverse 45º	
A0085-MI-W	Mill
2" STR	
A0288-MI-W	Mill
A0288-BR-W	Brown
A0288-WH-W	White
2" 45º	
A0282-MI-W	Mill
A0282-BR-W	Brown
A0282-WH-W	White
2" OFFSET	
A0083-MI-W	Mill
A0083-BR-W	Brown
A0083-WH-W	White
3" OFFSET	
A0086-MI-W	Mill

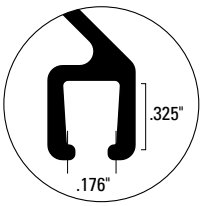

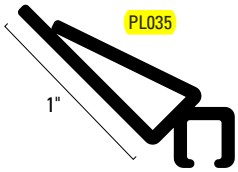

STANDARD ROLLING STEEL GUIDE SEAL

Designed to clip onto guides up to 1/4" thick. Compatible with standard brush, rubber and vinyl seals (see pages 3, 4 & 5).
STANDARD LENGTHS: 8'-2", 9'-2", 10'-2", 12'-4", 14'-4", 16'-4", 18'-4"

PART NUMBER	COLOR
PL035-00-W	Gray

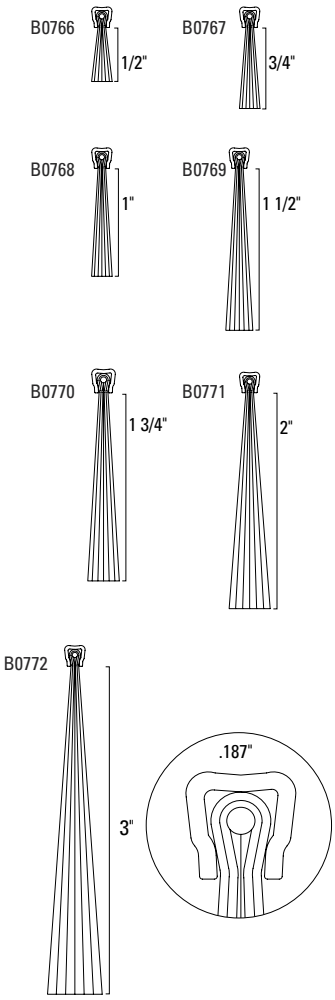

STANDARD & ZEBRA BRUSH SEALS

Both our Standard and Zebra Brush™ Seals are made of versatile and long-lasting filaments that will not hold water or freeze at sub-zero temperatures. Bristles are wrapped around a steel rod to prevent "pull-out." Standard Brush Seals fit all Standard Aluminum Retainers (see page 2) or Standard Rolling Steel Clip-On Retainers (see page 21). STANDARD LENGTHS: 6', 7', 8', 9', 10'.

PART NUMBER	*BRISTLE*
STANDARD BRUSH SEAL	
B0766-00-W	1/2"
B0767-00-W	3/4"
B0768-00-W	1"
B0769-00-W	1 1/2"
B0770-00-W	1 3/4"
B0771-00-W	2"
B0772-00-W	3"
ZEBRA BRUSH SEAL*	
B0768-ZB-W	1"
B0771-ZB-W	2"
B0772-ZB-W	3"

*Colors are alternating yellow and black filament for high visibility.

GASKETING MATERIALS FOR FIRE DOORS
Classified to U.S. and Canadian standards by Underwriters Laboratories Inc. for application to hollow metal, steel covered composite, rolling steel and passenger elevator type fire doors rated up to three hours only. GVWZ.RI8008.
All Action Industries Slim-Line, Standard and Large Brush Weatherseals from 1/2" to 6" are UL Listed to U.S. and Canadian safety standards.
Softening Point: 240ºF, Melting Point: 320ºF

weatherBLOCK WEATHERSEAL

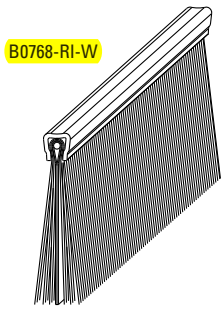

WEATHERBLOCK WEATHERSEAL

Action Industries' new standard weatherblock weatherseal ensures a secure seal and barrier against smoke, air infiltration and extreme weather. A single durable EPDM rubber insert provides an excellent seal. Fits all Standard Aluminum Retainers (see page 2). Standard Lengths: 8', 10'.

PART NUMBER	*DESCRIPTION*
BRUSH WEATHERSEAL	
B0766-RI-W	Standard 1/2" Brush
B0767-RI-W	Standard 3/4" Brush
B0768-RI-W	Standard 1" Brush
B0769-RI-W	Standard 1 1/2" Brush
B0770-RI-W	Standard 1 3/4" Brush
B0771-RI-W	Standard 2" Brush
B0772-RI-W	Standard 3" Brush

STANDARD RUBBER SEALS

Designed for applications where extreme temperature changes (-50º – 350ºF) may occur. Designed to fit in our Standard Aluminum Retainers (see page 2) or Standard Rolling Steel Clip-On Retainers (see page 21). AVAILABLE IN ROLLS OR INSTALLED.

PART NUMBER	*DESCRIPTION*
V0036-00-W	1 3/8" Black
V0056-00-W	2 1/2" Black

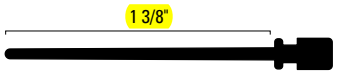

V0036

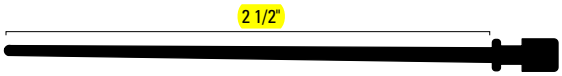

V0056

STANDARD VINYL SEALS

These seals possess excellent memory for shape retention under various conditions at a reasonable cost. Designed to fit in our Standard Aluminum Retainers (see page 2) or Standard Rolling Steel Clip-On Retainers (see page 21). AVAILABLE IN ROLLS OR INSTALLED.

PART NUMBER	*COLOR*
V0021-GR-W	Gray
V0023-WH-W	White
V0024-BL-W	Black

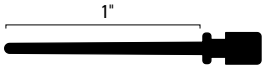

V0021 / V0023 / V0024

PART NUMBER	*COLOR*
V0031-GR-W	Gray
V0033-WH-W	White
V0034-BL-W	Black

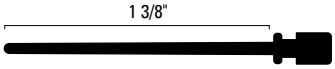

V0031 / V0033 / V0034

PART NUMBER	*COLOR*
V0041-GR-W	Gray
V0043-WH-W	White
V0044-BL-W	Black

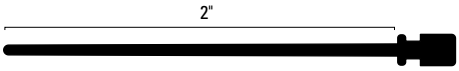

V0041 / V0043 / V0044

BOTTOM SEALS

ALUMINUM BOTTOM SEAL RETAINERS

Longer-lasting, versatile retainer that will accept ¼" T-Style rubber, vinyl or bulb seals from pages 13 – 17.
Available in Mill finish.
STANDARD LENGTHS: 8'-2", 9'-2", 10'-2", 12'-4", 14'-4", 16'-4", 18'-4"

PART NUMBER	*DESCRIPTION*
A1015-01-W	1" x 1 1/2" L-Shaped
A1250-00-W	1 1/4" Flat
A1315-01-W	1 3/8" x 1 1/2" L-Shaped
A1330-01-W	1 3/8" x 3" U-Shaped
A1330-02-W	1 3/8" x 3" L-Shaped
A1700-00-W	1 5/8" Flat
A1703-00-W	1 5/8" L-Shaped
A1818-01-W	1 3/4" x 1 3/4" L-Shaped
A1830-01-W	1 3/4" x 3" U-Shaped
A2000-TG-W	2" Tongue & Groove Panel
A2010-01-W	2"x 1" L-Shaped
A2020-01-W	2"x 2" L-Shaped
A2030-01-W	2" x 3" U-Shaped
A2040-01-W	2" x 2" U-Shaped
A2050-01-W	2" x 1 5/8" T-Shaped

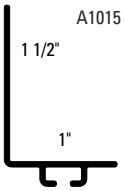

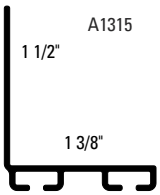

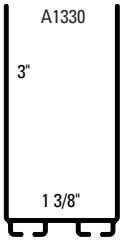

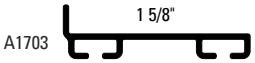

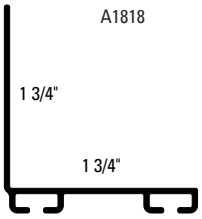

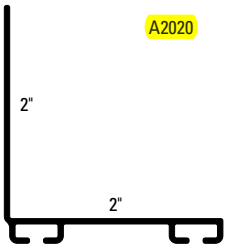

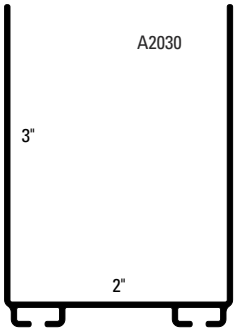

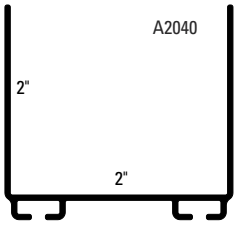

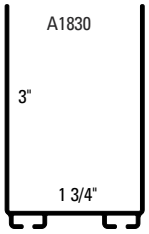

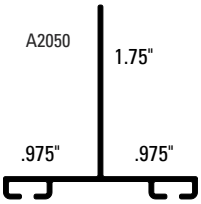

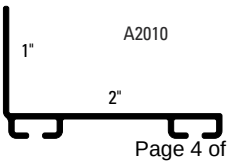

BOTTOM "T" RUBBER SEALS

Made of durable, black EPDM synthetic rubber, excellent in extreme temperature conditions (-50º – 350ºF). Designed with a 1/4" "T" to fit the popular T-style bottom retainers.

PART NUMBER	*DESCRIPTION*
T2563-00-W	3" T-Rubber, Black, 150' Reel
T2564-00-W	4" T-Rubber, Black, 150' Reel
T2566-00-W	6" T-Rubber, Black, 100' Reel

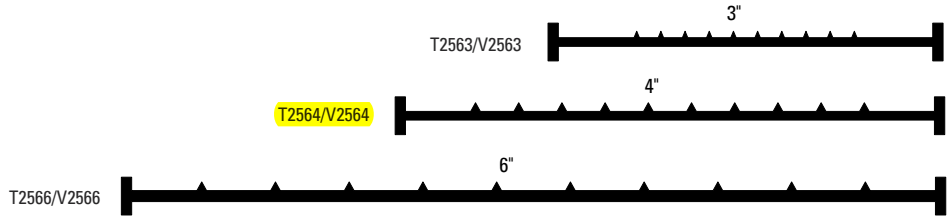

PART NUMBER	*DESCRIPTION*
T2567-00-W	7" T-Rubber, Black, 100' Roll
T2569-00-W	9" T-Rubber, Black, 100' Roll

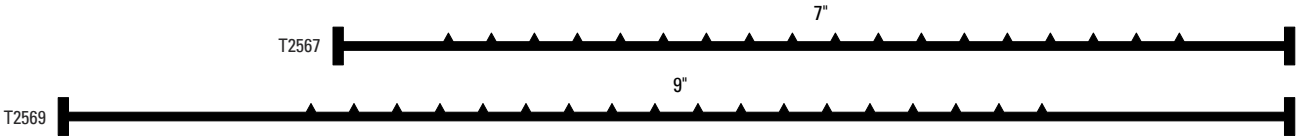

BOTTOM "T" VINYL SEALS

This high-quality vinyl astragal series provides an economical option for your bottom seal needs. The material is specially engineered for better performance at low temperatures, and the universal 1/4" "T" construction fits almost any retainer.

PART NUMBER	*DESCRIPTION*
V2563-BL-W	3" T-Vinyl, Black, 200' Reel
V2563-GR-W	3" T-Vinyl, Gray, 200' Reel

PART NUMBER	*DESCRIPTION*
V2564-BL-W	4" T-Vinyl, Black, 200' Reel
V2564-GR-W	4" T-Vinyl, Gray, 200' Reel
V2564-YL-W	4" T-Vinyl, Yellow, 200' Reel

PART NUMBER	*DESCRIPTION*
V2566-BL-W	6" T-Vinyl, Black, 200' Reel
V2566-GR-W	6" T-Vinyl, Gray, 200' Reel

SUBMITTAL FORM
Cell-Pak Alabama

Date: _____

Submitted to: _____

Submitted by: _____

Job Reference: _____

Job Name: _____

CellPak Cellulose
645 McIntire Lane
Decatur, Alabama 35603
256-260-2151 / www.cellpak.com

United States

Product Type	Product Code	Description	Minimum Thickness (inches)		R-Value	Applicable Standards/ Specifications
			Installed	Settled		
CellPak Cellulose Insulation	**Advantage**	Cellulosic Fiber Loose-Fill Insulation to be blown dry or with moisture into attics. Made of 100% recycled newsprint treated for fire resistance.	4.5 6.3 7.2 9.6 12.0 15.3	4.1 5.7 6.5 8.6 10.8 13.7	R-13 R-19 R-22 R-30 R-38 R-49	CPSC Standard HH-I-515E Federal Regulation 16 CFR 1209, 1404, ASTM C739-11, ASTM E84
CellPak Cellulose Insulation	**Supreme**	Cellulosic Fiber Supreme Insulation to be blown dry or with moisture into attics. Made of 100% recycled newsprint treated for fire resistance.	4.5 6.3 7.3 9.7 12.2 15.6	4.1 5.7 6.5 8.7 11.0 14.0	R-13 R-19 R-22 R-30 R-38 R-49	CPSC Standard HH-I-515E Federal Regulation 16 CFR 1209, 1404, ASTM C739-11, ASTM E84
CellPak Cellulose Insulation	**Supreme**	Cellulosic Fiber Loose-Fill Insulation to be blown dry or with moisture into sidewalls. Made of 100% recycled newsprint treated for fire resistance.	3.5 5.5	N/A N/A	R-13 R-20	CPSC Standard HH-I-515E Federal Regulation 16 CFR 1209, 1404, ASTM C739-11, ASTM E84
CellPak Cellulose Insulation	**Supreme Plus**	Cellulosic Fiber Loose-Fill Insulation to be blown dry or with moisture into attics. Made of 100% recycled newsprint treated with Zone Defense insecticide.	4.5 6.3 7.3 9.7 12.2 15.6	4.1 5.7 6.5 8.7 11.0 14.0	R-13 R-19 R-22 R-30 R-38 R-49	CPSC Standard HH-I-515E Federal Regulation 16 CFR 1209, 1404, ASTM C739-11, ASTM E84
CellPak Cellulose Insulation	**Smart Shredz**	Cellulosic Fiber Loose-Fill Insulation to be blown dry or with moisture into attics. Made of 100% recycled newsprint treated for fire resistance.	4.6 6.2 7.0 9.3 11.5 14.6	4.1 5.6 6.3 8.3 10.4 13.2	R-13 R-19 R-22 R-30 R-38 R-49	CPSC Standard HH-I-515E Federal Regulation 16 CFR 1209, 1404, ASTM C739-11, ASTM E84

Definitions:

"R" means resistance to heat flow, the higher the "R"' value the greater the resistance and therefore greater insulating power

CellPak Cellulose
645 McIntire Lane
Decatur, Alabama 35603
256-260-2151 / www.cellpak.com

Cell Pak Product Attributes

- Quality Cellulose begins with only quality ingredients. Cell-Pak uses 100% recycled newsprint to provide the best quality insulation to the consumer.

- The finish mills and the HydraPak Packaging System provides a light density cellulose with high efficiency performance.

Higher R-value

- Cell Pak insulation provides a high R-value per inch. This means the resistance to heat flow. The higher the “R” value the greater the resistance and greater insulating power, which saves you money.*

- The insulation forms a protective air tight blanket that seals around plumbing and electrical outlets too, for an air tight fit. This provides more-effective and cost-efficient protection.

*The R-value per inch of this insulation varies with thickness. The thicker the insulation, the lower the R-Value per inch.

Environmentally Friendly

- Cell Pak insulation consist of 100% recycled newsprint

- It is manufactured without using formaldehyde, asbestos, mineral fiber or fiberglass.

Added Fire Safety

- Cell Pak insulation has earned a Class 1 or Class A fire rating as determined by E84.

- Cell Pak insulation is treated with safe fire retardants that exceed test requirements set by the Consumer product Safety Commission (CPSC) standard 16 CFR Part 1209.

Test Requirements

- Cell Pak insulation meets all test requirements of ASTM C739-11. Tests include but are not limited to:

Corrosiveness	Odor Emission
Critical Radiant Flux	Smoldering Combustion
Design Density	Thermal Resistance
Fungi Resistance	Moisture Vapor Sorption

CellPak Cellulose
645 McIntire Lane
Decatur, Alabama 35603
256-260-2151 / www.cellpak.com

EcoTouch® Certified R Metal Building Insulation

Description

Owens Corning® EcoTouch® Certified R Metal Building Insulation is a light density fibrous glass blanket. EcoTouch® Certified R is labeled with both a pre-laminated and post-laminated R value. Standard roll widths are 36", 48", 60" and 72". Made-to-Order widths are also available in 2" increments (i.e. even number).

Applications

Owens Corning® EcoTouch® Certified R Metal Building Insulation is used as part of the insulation system in the roofs and side walls of metal buildings. It is designed to be laminated with a variety of facings to provide attractive interior finishes, abuse resistance, and assistance in control of moisture. It can also be used when unfaced insulation is required in metal building roof and wall systems.

Physical Properties

Property	Test Method	Value		
Thermal Resistance	ASTM C 177/C 518	Thickness	Pre-lam.	Post-lam.
		3.4"	R-10.8	R-10
		3.7"	R-11.9	R-11
		4.3"	R-14.1	R-13
		5.3"	R-17.3	R-16
		6.3"	R-20.6	R-19
		8.0"	R-27.1	R-25
		9.25"	R-32.5	R-30
Surface Burning	ASTM E 84 / UL723[1]	Flame spread index < 25 Smoke developed index < 50		
Combustion Characteristics	ASTM E 136	Non-combustible		
Water Vapor Sorption	ASTM C 1104 / C 1104M	≤ 0.2% by volume		
Fungi Resistance	ASTM C 1338	Passes		
Corrosiveness	ASTM C 665, sec. 13.8	Passes		
Odor Emission	ASTM C 1304	Passes		
Dimensional Tolerances	ASTM C 167	Length, - 0" / + ½" Width, - ¼" / + ¼"		

1. The surface burning characteristics of these products have been determined in accordance with UL 723. The standard should be used to measure and describe the properties of materials, products or assemblies in response to heat and flame under controlled laboratory conditions and should not be used to describe or appraise the fire hazard or fire risk of materials, products or assemblies under actual fire conditions. However, results of this test may be used as elements of a fire risk assessment which takes into account all of the factors which are pertinent to an assessment of the fire hazard of a particular end use. Values are reported to the nearest 5 rating.

Features

- Certified thermal performance
- Excellent recovery provides outstanding thermal and acoustical performance
- Contains an average of 65% recycled content
- GREENGUARD Gold Certified
- Easy to handle and laminate

Standards, Codes Compliance

- ASTM C991-08, Standard Specification for Flexible Fibrous Glass Insulation for Metal Buildings; Type II
- NAIMA 202-96 (Rev. 2000) Standard for Flexible Fiber Glass Insulation to be Laminated for Use in Metal Buildings

Technical Information

Owens Corning® EcoTouch® Certified R Metal Building Insulation is manufactured in compliance with ASTM C991, "Standard Specification for Flexible Fibrous Glass Insulation for Metal Buildings." This standard includes all performance and physical properties required of thermal insulation for use in metal building construction (see Physical Properties Table).

Owens Corning® EcoTouch® Certified R Metal Building Insulation is regularly tested to ensure compliance to the NAIMA 202-96 (Rev. 2000) Standard. Sampling and testing is performed by the National Association of Home Builders Home Innovation Research Lab. The product is labeled on the top surface of each roll with the nominal R-value and the "NAIMA 202-96" (Rev. 2000) to indicate compliance. The NAIMA 202-96 (Rev. 2000) standard specifies thermal performance which provides the capability of obtaining nominal thermal resistance (R-values) after laminating. The actual thermal performance obtained from the laminated product will depend primarily on the recovered thickness. Note that these nominal R-values are for the insulation only and do not include the effects of facings, air films, compression of insulation at framing members, conductance through fasteners, or other heat transfer paths particular to an installation.

The recovered thickness achieved will depend on a number of variables determined in the laminating process and hence are outside of Owens Corning's control. To address these issues, a number of leading metal building insulation laminators produce products which meet the National Insulation Association's "Certified Faced Insulation Standard" (NIA 404). Samples of faced products are periodically tested by a nationally recognized laboratory and determined to meet the NIA standard.

Installation

Several methods are used to insulate metal buildings. The usual method is to apply the insulation over the structural members (purlins and girts) and inside the exterior panels. This method generally accommodates single layer installations. Methods are also available to apply insulation between purlins so as to accommodate greater insulation thicknesses and better thermal performance.

Availability

Owens Corning® EcoTouch® Certified R Metal Building Insulation is fabricated and distributed by a nation wide network of independent laminators assuring prompt service and delivery. Contact your Owens Corning Sales Representative for the names of insulation laminators servicing your area.

Environmental and Sustainability

Owens Corning is a worldwide leader in building material systems, insulation and composite solutions, delivering a broad range of high-quality products and services. Owens Corning is committed to driving sustainability by delivering solutions, transforming markets and enhancing lives. More information can be found at www.sustainability.owenscorning.com

Notes

For additional information, refer to the Safe Use Instruction Sheet (SUIS) found in the SDS Database via http://sds.owenscorning.com

Certifications and Sustainable Features

- Certified by SCS Global Services to contain a minimum of 65% recycled glass content, 18% pre-consumer and 47% post-consumer
- GREENGUARD Certified products are certified to GREENGUARD standards for low chemical emissions into indoor air during product usage. For more information, visit ul.com/gg
- Received the Cradle to Cradle Products Innovation Institute's Gold Level Material Health Certificate
- This product's Environmental Product Declaration (EPD) has been certified by UL Environment

AVERAGE 65% RECYCLED CONTENT
18% PRE-CONSUMER
47% POST-CONSUMER

Disclaimer of Liability

Technical information contained herein is furnished without charge or obligation and is given and accepted at recipient's sole risk. Because conditions of use may vary and are beyond our control, Owens Corning makes no representation about, and is not responsible or liable for the accuracy or reliability of data associated with particular uses of any product described herein.
SCS Global Services provides independent verification of recycled content in building materials and verifies recycled content claims made by manufacturers. For more information, visit www.SCSglobalservices.com.

OWENS CORNING INSULATING SYSTEMS, LLC
ONE OWENS CORNING PARKWAY
TOLEDO, OHIO, USA 43659

1-800-GET-PINK®
www.owenscorning.com

Pub. No. 15086-X. Printed in U.S.A. September 2017.
THE PINK PANTHER™ & © 1964–2017 Metro-Goldwyn-Mayer Studios Inc.
All Rights Reserved. The color PINK is a registered trademark of Owens Corning.
© 2017 Owens Corning. All Rights Reserved.

DC315 Intumescent Coating

Description

DC315 is an intumescent coating for Spray Polyurethane Foam (SPF) and provides an alternative 15 or 20 minute thermal barrier. Tested and compliant in the **USA by ICC-ES, AND Canada by CCMC** Report # 14036-R, DC315 is the most tested and approved alternative thermal barrier on the market today!

To be approved as an Alternative Barrier System, DC 315 is applied over a manufacturer's SPF and tested to the criteria of NFPA 286, UL 1715 or ISO-CAN/ULC 9705 for duration of 15-20 minutes by an accredited fire testing facility. DC 315 has also been tested as an ignition barrier under **AC 377 Appendix X**. DC315 is fully **AC456 Compliant** and satisfies the International Building Code (IBC) International Residential Code (IRC) National Building Code of Canada (NBCC) and many other International

Properties	Value
Finish	Flat
Color	Ice Grey
V.O.C.	47g/L
Solids By Volume	67%
Specific Gravity	1.30+/-0.05 g/cc
Drying Time	@77° F & 50% R.H. – To touch 1 – 2 hours, to recoat if required 2 to 4 hours
Flash Point	None
Reducing or Cleaning	Water
Shelf Life	1 year from date of manufacture in unopened containers and stored at 10° C to 27° C (50° F to 80° F)
5 Gal. Container Weight	58 lbs.

DC315 Tested Solutions for Spray Polyurethane Foam

- More full scale Thermal and Ignition Barrier tests than any other product in the world
- DC 315 - 3rd. party inspected for Quality Control: Warnock Hersey Intertek W/N 20947
- Tested useful life, fire resistant property is not compromised after 50 years
- Top coat for color, weather & moisture protection, tested, via NFPA 286 full scale testing
- ANSI 51 testing for incidental food contact
- Passed CAL 1350 - qualify DC 315 as a low-emitting material in the Collaborative for High Performance Schools rating system (CHPS Designed & CHPS Verified)
- Passed strict EPA – V.O.C. and AQMD air emission requirements (for all 50 states)
- 3rd Party tested "Single Coat Coverage" up to 24 Mils WFT, on ceilings and walls, reducing labor costs equaling higher profits
- Meets Life Safety Code 101
- Meets LEED's point

Specifications

Finish:	Flat
Color:	Ice Gray, White and Dark Grey are special order
V.O.C.:	(47 g/l)
Volume Solids:	67%
Drying Time	@ 77°F & 50% RH To touch 1-2 hours to recoat 2 to 4 hours
Type of Cure:	Coalescence
Flash Point:	None
Reducer/Cleaner:	Water
Shelf Life:	1 year (unopened)
Packaging:	5 & 55 gallon containers
Shipping weight:	5 gallon pail - 58 lbs. 55 gallon drum - 640 lbs.
Application:	Brush, roller, conventional and airless spray
Performance:	50+ years HOAC tested

DC315 Intumescent Coating

DC 315 is the most tested and approved product in the world for use as an "**Alternative Thermal Barrier Coating System**" over Spray Polyurethane Foam (SPF).

Visit us at our website www.painttoprotect.com to obtain a current matrix of all the manufacturer's foams DC 315 has been tested and approved as Thermal or Ignition barriers in compliance with current IBC codes.

If a coating has not passed a full scale test on a manufacturer's foam it cannot be used on that foam; there are no exceptions in the IBC Code!

International Building Code Fire Performance Requirements for SPF: The International Building Code (IBC) mandates that SPF be separated from the interior of the building by a 15-minute thermal barrier, or other approved covering. DC 315 passed certified NFPA 286 and UL 1715 test over a variety of open and closed cell spray applied urethane foams that were conducted by IAS certified testing facilities. All tests performed comply with the requirements of 2009 IBC Section 803.1.2, and Section 2603.9; 2012 IBC Section 803.1.2 and Section 2603.10 under "Special Approvals for Thermal Barriers over Foam Plastics".

Alternative Ignition Barrier Assemblies DC 315 meets the requirements for ignition barrier per **AC 377, Appendix X.**

National Building Code of Canada Alternative Thermal Barrier Assemblies (e.g. Exposed SPF or SPF with a Thermal Barrier Protective Covering) DC315 prevents flashover for 10 minutes for Combustible Construction or 20 minutes for Non-Combustible construction when tested to the CAN/ULC 9705 Standard. Ensure application thickness is applied according to building type.

Application Equipment

DC 315 can be applied by brush, roller or airless sprayer. For maximum yield and coverage spray application is recommended.

Pump:	(Graco) UltraMax 795 or equivalent
PSI:	3000
GPM:	1.1
Tip:	517 - 523 or equivalent.
Filter:	Removal from the machine and gun is required
Hose:	3/8" diameter airless spray line for the first 100' from pump and 1/4" x 3' whip

Pump:	(Graco) TexSpray Mark 5 or equivalent
PSI:	3300
GPM:	1.35
Tip:	517 - 523 or equivalent.
Filter:	Removal from the machine and gun is required
Hose:	3/8" diameter airless spray line for the first 100' from pump and 1/4" x 3' whip

Pump:	(Graco) GMAX 7900 or equivalent
PSI:	3300
GPM:	2.2
Tip:	517 - 529 or equivalent.
Filter:	Removal from the machine and gun is required
Hose:	1/2" diameter airless spray line for the first 100' 300' from pump and 1/4" x 3' whip

Pump:	(Graco) GH 833 or equivalent
PSI:	4000
GPM:	4.0
Tip:	517 - 529 or equivalent.
Filter:	Removal from the machine and gun is required
Hose:	1/2" diameter airless spray line for the first 100'-300' from pump and 1/4" x 3' whip

Testing

ASTM E84 - Flame Spread 0 Smoke 10

CAN/ULC S102 FSR 23 SDC 145 - (tested as a system over SPF)

UL 1715, NFPA 286 - over 140 test passed

CAN/ULC S 101 - 25 minutes as a system over SPF

CAN/ULC 9705 10 and 20 minute assembly testing

WH Listed - Spec ID 32890

International Fireproof Technology Inc.
The Ultimate in Firestop Solutions and Fire Protective Coatings

International Fireproof Technology, Inc.
17528 Von Karman Ave. Irvine, CA 92614

Office: 949-975-8588
Web Site: www.painttoprotect.com
Email: ptp@painttoprotect.com

FROTH-PAK™ Foam Insulation

1. PRODUCT NAME

FROTH-PAK™ Foam Insulation

2. MANUFACTURER

The Dow Chemical Company
Dow Building Solutions
200 Larkin
Midland, MI 48674
1-866-583-BLUE (2583)
Fax 1-989-832-1465

www.dowbuildingsolutions.com

3. PRODUCT DESCRIPTION

BASIC USE

FROTH-PAK™ Foam Insulation is a two-component, quick-cure polyurethane foam that fills cavities, penetrations, cracks and expansion joints. Unlike one-component foam, FROTH-PAK™ Foam Insulation is a chemically cured foam, significantly reducing curing time.

FROTH-PAK™ Foam Insulation dispenses, expands and becomes tack-free in seconds. The product will skin over in 30-40 seconds and will be completely cured in minutes.*

The Class-A rating (flame spread of 25 or less) of FROTH-PAK™ Foam Insulation allows its use in a wide range of interior and exterior industrial, commercial, institutional and residential settings. Check with local codes prior to use. If used in an exterior setting, a coating must be applied for ultraviolet (UV) protection.

SIZES

FROTH-PAK™ Foam Insulation is typically sold as a complete 42 lb (FROTH-PAK™ 200) portable kit that includes pressurized "A" and "B" cylinders, plus dispensing gun/hose assembly and accessories. FROTH-PAK™ Foam Insulation is also available in refillable, returnable cylinders for commercial applications requiring a large amount of foam. See Table 1 for yield and size information.

4. TECHNICAL DATA

APPLICABLE STANDARDS

ASTM International

- C203 – Standard Test Methods for Breaking Load and Flexural Properties of Block-Type Thermal Insulation
- C273 – Standard Test Method for Shear Properties of Sandwich Core Materials
- C518 – Standard Test Method for Steady-State Thermal Transmission Properties by Means of the Heat Flow Meter Apparatus
- D1621 – Standard Test Method for Compressive Properties of Rigid Cellular Plastics
- D1622 – Standard Test Method for Apparent Density of Rigid Cellular Plastics
- D1623 – Standard Test Method for Tensile and Tensile Adhesion Properties of Rigid Cellular Plastics
- D2842 – Standard Test Method for Water Absorption of Rigid Cellular Plastics
- E96 – Standard Test Methods for Water Vapor Transmission of Materials
- E283 – Standard Test Method for Determining Rate of Air Leakage Through Exterior Windows, Curtain Walls and Doors Under Specified Pressure Differences Across the Specimen
- E2178 – Standard Test Method for Air Permeance of Building Materials

PHYSICAL PROPERTIES

FROTH-PAK™ Foam Insulation exhibits the typical properties and characteristics indicated in Table 2 when tested as represented.

FIRE PROTECTION

Cured FROTH-PAK™ foam is combustible and will burn if exposed to open flame or sparks from high-energy sources. Do not expose to temperatures above 240°F.

CODE COMPLIANCES

FROTH-PAK™ Foam Insulation complies with the following codes:

- Underwriters Laboratories, Inc. (UL) Classified, see Classification Certificate R7813
- National Fire Protection Association – per NFPA 286 testing, can be left exposed in non-fire-resistant rated roof/wall junctures, maximum 6" high and 2" deep (unlimited width)

Contact your Dow sales representative or local authorities for state and local building code requirements and related acceptances.

5. INSTALLATION

Complete operating instructions are provided with each FROTH-PAK™ Foam Insulation purchase. Read all information and cautions before application. **Note: Avoid overfilling restricted spaces. Chemicals exert force during reaction, and expansion of foam may result in substrate deformation.**

TABLE 1: SIZES AND THEORETICAL YIELDS FOR FROTH-PAK™ FOAM INSULATION

PRODUCT	THEORETICAL YIELD(1), BOARD FT
Kits	
FROTH-PAK™ 200	200
FROTH-PAK™ 620	620
Refillable Cylinders (commercial use)	
FROTH-PAK™ 17 (gal)	2,060
FROTH-PAK™ 60 (gal)	6,860
FROTH-PAK™ 120 (gal)	15,430
FROTH-PAK™ 350 (gal)	43,890

(1) The theoretical yield has become an industry standard for identifying certain sizes of two-component kits. Theoretical yield calculations are performed in perfect laboratory conditions, without taking into account the loss of blowing agent or the variations in application methods and types.

®™Trademark of The Dow Chemical Company ("Dow") or an affiliated company of Dow
*Actual cure time will depend on temperature, foam thickness, the specific nozzle used, etc.

SAFETY AND CONDITIONS OF USE

- Read the instructions and Material Safety Data Sheets carefully before use.
- FROTH-PAK™ spray polyurethane foam contains isocyanate, hydrofluorocarbon blowing agent and polyol. Do not breathe vapor or mist. Use only in well-ventilated areas or with proper respiratory protection. Supplied air or an approved air-purifying respirator equipped with an organic vapor sorbent and a P100 particulate filter may be required to maintain exposure levels below ACGIH, OSHA, WEEL or other applicable limits. For situations where the atmospheric levels may exceed the level for which an air-purifying respirator is effective, use a positive-pressure, air-supplying respirator (air line or self-contained breathing apparatus).
- Isocyanate is irritating to the eyes, skin and respiratory system, and may cause sensitization by inhalation or skin contact.
- FROTH-PAK™ foam will adhere to most surfaces and skin. Do not get foam on skin. Wear protective clothing (including long sleeves), gloves, and goggles or safety glasses. Cured foam must be mechanically removed or allowed to wear off in time.
- The contents are under pressure.
- FROTH-PAK™ foam should not be used around heaters, furnaces, fireplaces, recessed lighting fixtures or other applications where the foam may come in contact with heat-conducting surfaces. Cured FROTH-PAK™ foam is combustible and will burn if exposed to open flame or sparks from high-energy sources. Do not expose to temperatures above 240°F.

TABLE 2: TYPICAL PHYSICAL PROPERTIES OF FROTH-PAK™ FOAM INSULATION

PROPERTY AND TEST METHOD	VALUE
Flame Spread/Smoke Developed(1)(2), ASTM E84/UL 723	25/350
Nominal Density, ASTM D1622, lb/ft^3	1.75
Thermal Resistance(3) per inch, ASTM C518, ft^2•h•°F/Btu, R-value, min.	
Initial	6.6
Aged 90 days at 140°F	5.6
Air Leakage,	
ASTM E283, cfm/ft^2 @ 1.57 psf	0
ASTM E2178, L/s/m^2 @ 75 Pa	0
Water Vapor Permeance, ASTM E96	
perm @ 1" thick	3.9
perm @ 2" thick	2.0
Water Absorption, ASTM D2842, % by volume	2.17
Dimensional Stability, ASTM D2126, % volume change	
100°F/100% RH @ 1wk	4.6
100°F/100% RH @ 2wks	5.0
158°F/100% RH @ 1wk	6.5
158°F/100% RH @ 2wks	5.1
-40°F/amb RH @ 1wk	0.9
-40°F/amb RH @ 2wks	0.9
158°F/amb RH @ 1wk	3.1
158°F/amb RH @ 2wks	2.3
Compressive Strength, ASTM D1621, lb/in^2, parallel	21.1
Flexural Strength, ASTM C203, lb/in^2, parallel	22.7
Tensile Strength, ASTM D1623, lb/in^2, parallel	26.7
Shear Strength, ASTM C273, lb/in^2, parallel	16.7
Maximum Service Temperature, °F	240

(1) Tested at 2" thickness, full coverage.
(2) This numerical flame spread rating is not intended to reflect hazards presented by this or any other material under actual fire conditions.
(3) R means resistance to heat flow. The higher the R-value, the greater the insulating power.

Visit www.dowbuildingsolutions.com or contact a local Dow representative for more specific instructions.

6. AVAILABILITY

FROTH-PAK™ Foam Insulation is distributed through an extensive network. For more information, call 1-800-232-2436.

7. WARRANTY

Not applicable.

8. MAINTENANCE

Not applicable.

9. TECHNICAL SERVICES

Dow can provide technical information to help address questions when using FROTH-PAK™ Foam Insulation. Technical personnel are available to assist with any insulation project. For technical assistance, call 1-866-583-BLUE (2583).

10. FILING SYSTEMS

- www.dowbuildingsolutions.com
- www.sweets.com

www.dowbuildingsolutions.com

Technical Information
1-866-583-BLUE (2583)
Sales Information
1-800-232-2436

THE DOW CHEMICAL COMPANY
200 Larkin
Midland, MI 48674

NOTICE: No freedom from any patent owned by Dow or others is to be inferred. Because use conditions and applicable laws may differ from one location to another and may change with time, Customer is responsible for determining whether products and the information in this document are appropriate for Customer's use and for ensuring that Customer's workplace and disposal practices are in compliance with applicable laws and other government enactments. The product shown in this literature may not be available for sale and/or available in all geographies where Dow is represented. The claims made may not have been approved for use in all countries or regions. Dow assumes no obligation or liability for the information in this document. References to "Dow" or the "Company" mean the Dow legal entity selling the products to Customer unless otherwise expressly noted. NO EXPRESS WARRANTIES ARE GIVEN EXCEPT FOR ANY APPLICABLE WRITTEN WARRANTIES SPECIFICALLY PROVIDED BY DOW. ALL IMPLIED WARRANTIES INCLUDING THOSE OF MERCHANTABILITY AND FITNESS FOR A PARTICULAR PURPOSE ARE EXPRESSLY EXCLUDED.

Dow Polyurethane Foam Insulation and Sealants
CAUTION: When cured, these products are combustible and will burn if exposed to open flame or sparks from high-energy sources. Do not expose to temperatures above 240°F. For more information, consult MSDS, call Dow at 1-866-583-BLUE (2583) or contact your local building inspector. In an emergency, call 1-989-636-4400.

FROTH-PAK™ spray polyurethane foam contains isocyanate, hydrofluorocarbon blowing agent and polyol. Read the instructions and Material Safety Data Sheets carefully before use. Wear protective clothing (including long sleeves), gloves, goggles or safety glasses, and proper respiratory protection. Supplied air or an approved air-purifying respirator equipped with an organic vapor sorbent and a P100 particulate filter may be required to maintain exposure levels below ACGIH, OSHA, WEEL or other applicable limits. Provide adequate ventilation. Contents under pressure.

Building and/or construction practices unrelated to building materials could greatly affect moisture and the potential for mold formation. No material supplier including Dow can give assurance that mold will not develop in any specific system.

®™Trademark of The Dow Chemical Company ("Dow") or an affiliated company of Dow
Form No. 179-04478X-0311P&M

GREAT STUFF PRO™ Gaps & Cracks Insulating Foam Sealant

1. PRODUCT NAME
GREAT STUFF PRO™ Gaps & Cracks Insulating Foam Sealant

2. MANUFACTURER
The Dow Chemical Company
Dow Building Solutions
200 Larkin
Midland, MI 48674
1-866-583-BLUE (2583)
Fax 1-989-832-1465

Dow Chemical Canada ULC
Dow Building Solutions
450 – 1st St. SW, Suite 2100
Calgary, AB T2P 5H1
1-866-583-BLUE (2583) (English)
1-800-363-6210 (French)

www.dowbuildingsolutions.com

3. PRODUCT DESCRIPTION
GREAT STUFF PRO™ Gaps & Cracks Insulating Foam Sealant is a minimal-expanding, single component polyurethane foam sealant for general purpose building envelope air sealing.

In the United States, the sealant is easily identified by its bright orange color. It has led the way in the industry by being recognized as a fireblock, which means it resists the free passage of flames to other areas of the building through concealed spaces.

Basic Use
GREAT STUFF PRO™ Gaps & Cracks Insulating Foam Sealant fills and seals gaps up to 3" (75 mm).* GREAT STUFF PRO™ Gaps & Cracks Insulating Foam Sealant:
- expands to take the shape of cracks and voids, forming an airtight and water-resistant bond to wood, metal, masonry, glass and most plastics
- reduces pathways where insects can enter
- installs in minutes (tack-free in 5-10 minutes**, trims within 60 minutes)

GREAT STUFF PRO™ Gaps & Cracks Insulating Foam Sealant is both cost-effective and effective as an air sealant.

Sizes
GREAT STUFF PRO™ Gaps & Cracks Insulating Foam Sealant is available in 24 oz (680 g) and 30 oz (850 g) gun- and reusable straw-applied versions.

Accessories
Using one of several PRO Series foam dispensing guns simplifies the application of GREAT STUFF PRO™ Gaps & Cracks. In addition to enabling pinpoint application control, an airtight and moisture tight seal between the gun and the can prevents the foam from curing and blocking the dispensing valve, allowing a can to be reused up to one month later.

GREAT STUFF PRO™ Gun Cleaner is a solution to simplify cleanup of uncured polyurethane foam from dispensing guns and work areas. Cured foam must be mechanically removed or allowed to wear off in time.

4. TECHNICAL DATA
Applicable Standards
GREAT STUFF PRO™ Gaps & Cracks Insulating Foam Sealant meets the following standards:
- ASTM E84 – Standard Test Method for Surface Burning Characteristics of Building Materials
- ASTM E814 (modified) – Standard Test Method for Fire Tests of Through-Penetration Fire Stops
- CAN/ULC S102 – Method of Test for Surface Burning Characteristics of Building Materials and Assemblies

Code Compliances
GREAT STUFF PRO™ Gaps & Cracks complies with Underwriters Laboratories, Inc. (UL) Classification, Classified as a sealant: see UL R13655.

Evaluation Reports
- ICC-ES ESR-1961 (US only)
- CCMC R13074 (CAN only)

Contact your Dow sales representative or local authorities for state/provincial and local building code requirements and related acceptances.

Physical Properties
GREAT STUFF PRO™ Gaps & Cracks is a polyurethane-based foam with a minimal-expansion formulation. It cures quickly and has a moisture-resistant skin. GREAT STUFF PRO™ Gaps & Cracks Insulating Foam Sealant exhibits the typical properties indicated in Table 1 when tested as represented.

5. INSTALLATION
GREAT STUFF PRO™ Gaps & Cracks Insulating Foam Sealant is easy to use. Complete installation instructions are provided on each can. Application surface should be free of dust and dirt. Damp surfaces will not impair the bond. PRO Series foam dispensing guns provide clean and precise dispensing with professional results.

Safety And Conditions Of Use
- Read all instructions and (Material) Safety Data Sheet ((M)SDS).
- GREAT STUFF PRO™ Gaps & Cracks Insulating Foam Sealant contains isocyanate and a flammable blowing agent. Vapors may travel to other rooms. Ensure adequate ventilation and shut off all pilot lights and open flames; eliminate all sources of ignition before use. Do not smoke or use lighters or matches while dispensing foam.
- Do not breathe vapor or mist. Use in well-ventilated areas or wear proper respiratory protection. Isocyanate is irritating to the eyes, skin and respiratory system, and may cause sensitization by inhalation or skin contact.

®™Trademark of The Dow Chemical Company ("Dow") or an affiliated company of Dow
*For cavities, cracks and penetrations larger than 3" (75 mm), Dow recommends FROTH-PAK™ Foam Sealant or FROTH-PAK™ Foam Insulation (US only). For window and door framework, minimal-expanding GREAT STUFF PRO™ Window & Door Insulating Foam Sealant is proven not to distort or bow the framework, when properly applied.
**70 ± 5 °F and 50 ± 5 %RH, , 1 inch bead diameter, 6 inch length. Cure rate is dependent on temperature, humidity, and size of foam bead.

- GREAT STUFF PRO™ foam is very sticky and will adhere to most surfaces and skin. Do not get foam on skin. Cover all skin, wear long sleeves, gloves, and goggles or safety glasses. Cured foam must be mechanically removed or allowed to wear off in time.
- The contents are under pressure. Not to be used for filling closed cavities or voids such as behind walls and under tub surrounds. The can may burst if left in areas susceptible to high temperatures, such as motor vehicles, or near radiators, stoves or other sources of heat. Do not place can in hot water. Do not puncture, incinerate or store at temperatures above 120°F (49°C).
- GREAT STUFF PRO™ foam should not be used around heaters, furnaces, fireplaces, recessed lighting fixtures or other applications where the foam may come in contact with heat-conducting surfaces. GREAT STUFF PRO™ foam is combustible and will burn if exposed to open flame or sparks from high-energy sources. Do not expose to temperatures above 240°F (116°C).

Visit www.dowbuildingsolutions. com or contact a local Dow representative for more specific instructions.

6. AVAILABILITY

GREAT STUFF PRO™ Gaps & Cracks Insulating Foam Sealant is distributed through an extensive network. For more information, call:
1-800-232-2436 (English)
1-800-565-1255 (French)

TABLE 1: Typical Physical Properties[1] Of GREAT STUFF PRO™ Gap & Cracks Insulating Foam Sealant

Property and Test Method	Value
Flexural Strength, ASTM C203, parallel to rise, psi (kPa), min.	8.8 (60.7)
K-factor (Thermal Resistance) per inch (25mm), ASTM C518 @75°F (24°C) mean temp., Btu•in/ft2•hr•°F (W/m•°C), min.	0.26 (0.037)
Compressive Strength, ASTM D1621, parallel to rise, psi (kPa)	9.3 (64.1)
Apparent Core Density, ASTM D1622, pcf (kg/m3)	1.01 (16)
Dimensional Stability, ASTM D2126, % volume change	
100°F/100%RH@2wks	14.31
-40°F/ambRH@2wks	0.41
Closed Cell Content, ASTM D2856, %	80
Tensile Strength, ASTM D1623, parallel to rise, psi (kPa)	14.4 (99.3)

[1]Not to be considered sales specifications

7. WARRANTY

Not applicable.

8. MAINTENANCE

GREAT STUFF PRO™ Gaps & Cracks Insulating Foam Sealant has a shelf life of 12 months when stored at 75°F (24°C). Contents of the can are under pressure. Can may burst if left in areas susceptible to high temperatures, such as motor vehicles, or near radiators, stoves or other sources of heat. Do not place can in hot water. Do not puncture, incinerate or store at temperatures above 120°F (49°C).

9. TECHNICAL SERVICES

Dow can provide technical information to help address questions when using GREAT STUFF PRO™ Gaps & Cracks Insulating Foam Sealant.
For technical assistance, call:
1-866-583-BLUE (2583) (English)
1-800-363-6210 (French)

10. FILING SYSTEMS

www.dowbuildingsolutions.com

In the United States
The Dow Chemical Company
Dow Building Solutions
200 Larkin Center
Midland, MI 48674

In Canada
Dow Chemical Canada ULC
Dow Building Solutions
450 – 1st St. SW
Suite 2100
Calgary, AB T2P 5H1

For Technical Information:
1-866-583-BLUE (2583) (English)
1-800-363-6210 (French)

For Sales Information:
1-800-232-2436 (English)
1-800-565-1255 (French)

dowbuildingsolutions.com

NOTICE: No freedom from infringement of any patent owned by Dow or others is to be inferred. Because use conditions and applicable laws may differ from one location to another and may change with time, Customer is responsible for determining whether products and the information in this document are appropriate for Customer's use and for ensuring that Customer's workplace and disposal practices are in compliance with applicable laws and other government enactments. The product shown in this literature may not be available for sale and/or available in all geographies where Dow is represented. The claims made may not have been approved for use in all countries or regions. Dow assumes no obligation or liability for the information in this document. References to "Dow" or the "Company" mean the Dow legal entity selling the products to Customer unless otherwise expressly noted. NO EXPRESS WARRANTIES ARE GIVEN EXCEPT FOR ANY APPLICABLE WRITTEN WARRANTIES SPECIFICALLY PROVIDED BY DOW. ALL IMPLIED WARRANTIES INCLUDING THOSE OF MERCHANTABILITY AND FITNESS FOR A PARTICULAR PURPOSE ARE EXPRESSLY EXCLUDED.

Dow Polyurethane Foam Insulation and Sealants
CAUTION: When cured, these products are combustible and will burn if exposed to open flame or sparks from high-energy sources. Do not expose to temperatures above 240°F (116°C). For more information, consult (Material) Safety Data Sheet ((M)SDS), call Dow at 1-866-583-BLUE (2583) or contact your local building inspector. In an emergency, call 1-989-636-4400 in the U.S. or 1-519-339-3711 in Canada. When air sealing buildings, ensure that combustion appliances, such as furnaces, water heaters, wood burning stoves, gas stoves and gas dryers are properly vented to the outside. See website: http://www.epa.gov/iaq/homes/hip-ventilation.html. In Canada visit http://archive.nrc-cnrc.gc.ca/eng/ibp/irc/bsi/83-house-ventilation.html.

GREAT STUFF PRO™ Insulating Foam Sealants contain isocyanate and a flammable blowing agent. Read all instructions and (Material) Safety Data Sheet ((M)SDS) carefully before use. Eliminate all sources of ignition before use. Cover all skin. Wear long sleeves, gloves, and goggles or safety glasses. Provide adequate ventilation or wear proper respiratory protection. Contents under pressure. Not to be used for filling closed cavities or voids such as behind walls and under tub surrounds.

GREAT STUFF PRO™ Gun Cleaner is flammable and contains acetone and propane. Read all instructions and (M)SDS carefully before use. Eliminate all sources of ignition before use. Cover all skin. Wear gloves, and goggles or safety glasses. Provide adequate ventilation or wear proper respiratory protection. Contents under pressure.

Building and/or construction practices unrelated to building materials could greatly affect moisture and the potential for mold formation. No material supplier including Dow can give assurance that mold will not develop in any specific system.

®™ Trademark of The Dow Chemical Company ("Dow") or an affiliated company of Dow

Printed in the U.S.A.
Form No. 179-07323-0515 CDP
178-00752-0515 CDP
CDP 56398

THERMAX™ Sheathing

1. PRODUCT NAME

THERMAX™ Sheathing

2. MANUFACTURER

The Dow Chemical Company
Dow Building Solutions
200 Larkin
Midland, MI 48674
1-866-583-BLUE (2583)
Fax 1-989-832-1465

www.dowbuildingsolutions.com

3. PRODUCT DESCRIPTION

THERMAX™ Sheathing is a non-structural, rigid board insulation consisting of a glass-fiber-infused polyisocyanurate foam core laminated between 1.0 mil smooth, reflective aluminum facers on both sides. The glass-fiber reinforcement contributes to improved fire performance and dimensional stability. THERMAX™ Sheathing can be installed exposed to the interior without a thermal barrier.

THERMAX™ Sheathing offers high, long-term R-value. Used in conjunction with the appropriate joint closure system for the application, THERMAX™ Sheathing with its low perm rating helps to reduce moisture condensation within and behind the insulation.

BASIC USE

THERMAX™ Sheathing is specially designed to have a Class A fire rating and can be used in a range of concealed and exposed applications, above and below grade, and can be used in exterior walls. Because of its improved fire performance, THERMAX™ Sheathing is especially appropriate for hourly rated assemblies. THERMAX™ Sheathing is approved for use, per Section 2603.5 of the International Building Code, in Exterior Walls of Types I,II,III and IV construction. THERMAX™ Sheathing is designed for use as continuous insulation in both interior and exterior applications to assist in meeting and exceeding both the most current IECC and the ASHRAE 90.1 energy standards. Maximum length is 30 ft. (9.1 m) and maximum thickness is 4.25" (108 mm).

4. TECHNICAL DATA

APPLICABLE STANDARDS

THERMAX™ Sheathing meets ASTM C1289 – Standard Specification for Faced Rigid Cellular Polyisocyanurate Thermal Insulation Board, Type I, Class 2. Applicable standards include:

- C203 – Standard Test Methods for Breaking Load and Flexural Properties of Block-Type Thermal Insulation
- C209 – Standard Test Methods for Cellulosic Fiber Insulating Board
- C518 – Standard Test Method for Steady-State Thermal Transmission Properties by Means of the Heat Flow Meter Apparatus
- D1621 – Standard Test Method for Compressive Properties of Rigid Cellular Plastics
- D2126 – Standard Test Method for Response of Rigid Cellular Plastics to Thermal and Humid Aging
- E96 – Standard Test Method for Water Vapor Transmission of Materials
- D1623 – Standard Test Method for Tensile and Tensile Adhesion Properties of Rigid Cellular Plastics

TYPICAL PHYSICAL PROPERTIES

THERMAX™ Sheathing exhibits the typical physical properties and characteristics indicated in Table 2 when tested as represented.

ENVIRONMENTAL DATA

THERMAX™ Sheathing is manufactured with a zero ozone depleting potential. The use of THERMAX™ Sheathing helps reduce the carbon footprint of commercial buildings.

FIRE INFORMATION

THERMAX™ Sheathing products should be used only in strict accordance with product application instructions. THERMAX™ products are combustible and when used in a building containing combustible materials, may contribute to the spread of fire. For more information, consult MSDS and/or call Dow at 1-866-583-BLUE (2583). In an emergency, call 1-989-636-4400.

CODE COMPLIANCES

THERMAX™ Sheathing complies with the following codes:

- ASTM E2178 Standard Test Method for Air Permeance of Building Materials - leakage rates less than 0.001 L/s/m^2 at a test pressure of 75 Pa.
- ASTM E283 Standard Test Method for Determining Rate of Air Leakage through Exterior Windows, Curtain Walls, and Doors under specified Pressure differences across the specimen. Results were <0.02 L/s/m^2
- ASTM E2357 Standard Test Method for Determining Air Leakage of Air Barrier Assemblies - no leakage
- ASTM E331 Standard Test Method for Water Penetration of Exterior Windows, Skylights, Doors, and Curtain Walls by Uniform Static Air Pressure Difference - no leakage
- 2009 International Residential Code (IRC) Section 316
- 2009 International Building Code (IBC) Section 2603
- ICC-ES ESR-1659
- FM 4880 – Wall-Ceiling Construction Metal-Faced – Class 1 Fire Rated to Max. 30' Exposure High, 4.25" Thick, 4' Wide, When Installed as Described in the Current Edition of FMRC Approval Guide
- FM 4450 Approval Standard for Class 1 Insulated - Steel Deck Roofs
- THERMAX™ products are covered under Underwriters Laboratories Inc. (UL) File R5622
- UL 1256 – Fire Test of Roof Deck Constructions, Roof Deck Construction No. 120 and No. 123
- UL 723 (ASTM E84) Surface Burning Characteristics of Building Materials
- The following designs are 1, 2, 3 or 4 hour wall rated assemblies as listed in the UL Fire Resistance Directory: U026, U326, U330, U354, U355, U424, U425, U460, U902, U904, U905, U906, U907, V454, V482, V499

®™Trademark of The Dow Chemical Company ("Dow") or an affiliated company of Dow

- Fire Performance Evaluation of an Exterior Masonry Wall System Incorporating THERMAX™ Insulation Tested in Accordance With NFPA 285, 2006 Edition (UBC 26.9, intermediate scale – multistory testing)
- FMVSS No. 302 – Flammability of Interior Materials – Passenger Cars, Multipurpose Passenger Vehicles, Trucks and Buses (Docket No. 3-3; Notice 4)
- Miami-Dade NOA 08-0320.01 Interior Insulation on CMU Block

Contact your Dow sales representative or local authorities for state and local building code requirements and related acceptances.

5. INSTALLATION

Boards of THERMAX™ Sheathing are lightweight and can be sawed or cut with a knife. They install quickly to walls (girts, steel stud, tilt-up, block, wood) and ceilings – inside and outside of purlins, trusses or bar joints. Butt joints must be installed over structural members. "Best practice" recommendations for high-humidity environments include continuously sealing the surface of the insulation at all joints with a Dow joint closure system.
Contact a local Dow representative or access the literature library at www.dowbuildingsolutions.com for more specific instructions.

TABLE 1: SIZES, R-VALUES AND EDGE TREATMENTS FOR THERMAX™ SHEATHING

NOMINAL BOARD THICKNESS(1), IN.	R-VALUE(2)(3)	BOARD SIZE, FT	EDGE TREATMENT
.50	3.3	4 x 8, 4 x 9, 4 x 10	Square Edge
.75	5.0	4 x 8, 4 x 9, 4 x 10	Square Edge
1.0	6.5	4 x 8, 4 x 9, 4 x 10	Square Edge
1.5	9.8	4 x 8, 4 x 9, 4 x 10	Square Edge, Shiplap
2.0	13.0	4 x 8, 4 x 9, 4 x 10	Square Edge, Shiplap

(1) Contact your Dow seller for information at different R-values and other sizes and lead time requirements. Not all product sizes are available in all regions.
(2) R means resistance to heat flow. The higher the R-value, the greater the insulating power. Stabilized R-values @ 75°F mean temperature determined in accordance with ASTM C518. R-values expressed in $ft^2 \bullet h \bullet °F/Btu$.
(3) An additional 2.77 R-value may be added to the system R-value, when a minimum 3/4" ideal air space and horizontal heat flow are present in accordance with the ASHRAE Fundamentals Handbook on FTC, 16 CFR Part 460.

TABLE 2: TYPICAL PHYSICAL PROPERTIES OF THERMAX™ SHEATHING

PROPERTY AND TEST METHOD	VALUE
Compressive Strength(1), ASTM D1621, psi, min.	25
Flexural Strength, ASTM C203, psi, min.	40
Water Absorption, ASTM C209, % by volume, max.	0.1
Water Vapor Permeance, ASTM E96, perm, max.	<0.03
Maximum Use Temperature, °F	250

(1) Vertical compressive strength is measured at 10 percent deformation or at yield, whichever occurs first.

6. AVAILABILITY

THERMAX™ Sheathing is manufactured in several locations and is distributed through an extensive network. For more information, call 1-800-232-2436.

7. WARRANTY

Fifteen-year limited warranty is available. Contact your Dow representative for details.

8. MAINTENANCE

Not applicable.

9. TECHNICAL SERVICES

Dow can provide technical information to help address questions when using THERMAX™ Sheathing. Technical personnel are available to assist with any insulation project. For technical assistance, call 1-866-583-BLUE (2583).

10. FILING SYSTEMS

- www.dowbuildingsolutions.com
- www.DowMetalBuilding.com

www.dowbuildingsolutions.com
www.thermaxbydow.com

Technical Information
1-866-583-BLUE (2583)
Sales Information
1-800-232-2436

IN THE U.S.
THE DOW CHEMICAL COMPANY
200 Larkin
Midland, MI 48674

NOTICE: No freedom from any patent owned by Dow or others is to be inferred. Because use conditions and applicable laws may differ from one location to another and may change with time, Customer is responsible for determining whether products and the information in this document are appropriate for Customer's use and for ensuring that Customer's workplace and disposal practices are in compliance with applicable laws and other government enactments. The product shown in this literature may not be available for sale and/or available in all geographies where Dow is represented. The claims made may not have been approved for use in all countries or regions. Dow assumes no obligation or liability for the information in this document. References to "Dow" or the "Company" mean the Dow legal entity selling the products to Customer unless otherwise expressly noted. NO EXPRESS WARRANTIES ARE GIVEN EXCEPT FOR ANY APPLICABLE WRITTEN WARRANTIES SPECIFICALLY PROVIDED BY DOW. ALL IMPLIED WARRANTIES INCLUDING THOSE OF MERCHANTABILITY AND FITNESS FOR A PARTICULAR PURPOSE ARE EXPRESSLY EXCLUDED.

CAUTION: This product is combustible and shall only be used as specified by the local building code with respect to flame spread classification and to the use of a suitable thermal barrier. For more information, consult MSDS, call Dow at 1-866-583-BLUE (2583) or contact your local building inspector. In an emergency, call 1-989-636-4400.

WARNING: Rigid foam insulation does not constitute a working walkable surface or qualify as a fall protection product.

Building and/or construction practices unrelated to building materials could greatly affect moisture and the potential for mold formation. No material supplier including Dow can give assurance that mold will not develop in any specific system.

Printed in U.S.A.

®™Trademark of The Dow Chemical Company ("Dow") or an affiliated company of Dow

Form No. 179-04015X-0512MCK
MCKAY214034

DuPont™ Caulk

DuPont™ Caulk Home

Pick Your Sealing Project

Kitchen & Bath

Windows, Doors & Siding Sealant

DuPont™ Paintable Premier Silicone

DuPont™ Window & Door Premier Silicone

DuPont™ Window & Door Choice Silicone

DuPont™ Window, Doors, & Siding Silicone w/ Kevlar®

DuPont™ Painters Caulk w/ Speed Dry™ Technology

DuPont™ AIRTITE® Siliconized Acrylic Caulk

Aluminum & Metal

Driveway & Roofing

Concrete & Masonry

Paintable Caulk

About our Products

Using Our Products

Where to Buy

Customer Care

Contact Us

Print This Page

DuPont™ AIRTITE® Siliconized Acrylic Caulk with Weather-Tight Seal technology

DuPont™ AIRTITE® Siliconized Acrylic Caulk with Weather-Tight Seal technology is ideal for sealing gaps around windows, doors, trim, and a variety of other interior and exterior surfaces. With this new technology, DuPont™ AIRTITE® Siliconized Acrylic Caulk forms a weather-tight seal that has been tested by accepted standards for adhesion, low temperature flexibility, extension/recovery, and weathering. Reduce air leaks in your home and increase energy efficiency by caulking or sealing with an acrylic sealant.

DuPont™ AIRTITE® Siliconized Acrylic Caulk can help eliminate air infiltration into a home when used around doors and windows. The Department of Energy - ENERGY STAR® Home Sealing guidelines and the NAHB Green Home Building Guidelines recommend the use of caulk to increase the energy efficiency of a home. Using DuPont™ Caulk may also help contribute towards U.S. Green Building Council's LEED® (Leadership in Energy and Environmental Design) points.

DuPont™ AIRTITE® Siliconized Acrylic Caulk with Weather-Tight Seal technology comes in both a convenient squeeze tube and cartridge, which requires a caulk gun for application.

For interior and exterior acrylic sealant, choose the name that has brought you quality products for more than 200 years - DuPont.

Product Features:

- Exceeds ASTM C-834, Grade -18° C
- 40-year guarantee
- Interior / Exterior
- Paintable
- Water-resistant seal
- Airtight seal
- VOC less than 1.5%
- Cured bead is mildew resistant

Available colors and packaging:

- 10.1 oz. cartridges & 5.5 oz. squeeze tubes available in: White and Clear

Is Your Home Energy Efficient?

Air-seal your home with DuPont™ AIRTITE® Siliconized Acrylic Caulk to increase energy efficiency and comfort. Download the ENERGY STAR® Do-It-Yourself Guide to get started.

» Download Now

DuPont™ AIRTITE® Siliconized Acrylic Caulk

DuPont™ AIRTITE® Siliconized Acrylic Caulk with Weather-Tight Seal technology is now available at Lowe's Home Improvement Stores nationwide and online.

LOWE'S
Let's Build Something Together

» Buy Now!

DuPont™ Residential Sealant

Testing Standards:

- ASTM C-834, Type OP, Grade -18°C, White
- ASTM C-834, Type C, Grade 0°C, Clear

Adheres to:

- Concrete
- Wood
- Metal
- Marble
- Glass
- Porcelain
- Ceramic tile
- Masonry

Copyright © 2012 DuPont or its affiliates. All rights reserved. The DuPont Oval Logo, DuPont™, The miracles of science™ and all products denoted with ® or ™ are registered trademarks or trademarks of E. I. du Pont de Nemours and Company or its affiliates.

sashco Products That Work®

TECHNICAL DATA

Big Stretch®

Won't Crack. . . It Just Stretches

DESCRIPTION:
Big Stretch® is a high-performance water-based elastomeric sealant with powerful adhesion and superior elasticity. It spans gaps up to 2" wide and stretches up to 500% of original joint size without cracking. Big Stretch won't crack…it just stretches.

WHERE TO USE:
Interior and exterior applications, including:
- Windows
- Doors
- Siding
- Vents
- Soffits
- Baseboards
- Eaves
- Crown Moulding
- Sound-proofing interior walls

ADHERES TO: (all conform to ASTM C794)
Most building materials including:

Metals
- Aluminum
- Brass
- Steel
- Anodized Windows

Plastics
- ABS
- Lexan®*
- Acrylic Sheet
- Plexiglass
- PVC
- Fiberglass
- Urethane
- Vinyl
- Polycarbonate
- Polystyrene
- Nylon

Other Surfaces
- Asphalt
- Tile
- Cinder Block
- Corian®*
- Wood
- Formica®*
- Glass
- Mortar
- Hot melt Butyl
- Stucco
- Brick
- Concrete
- Stone
- EIFS
- Fiber Cement
- Drywall

COLORS:
- White
- Redwood
- Woodtone
- Dark Brown
- Pine Green
- Limestone
- Almond
- Tan
- Gray
- Clear
- Black
- Ironstone
- Slate Gray

Visit www.sashco.com for a color compatibility chart that matches Big Stretch colors to various vinyl window manufacturers' colors.

PACKAGING:
- 10.5 oz. plastic cartridges
- 29 oz. fiber cartridges (white only)

COVERAGE:
A 10.5 oz. cartridge will yield approx. 26 lineal feet with a ¼" (6 mm) bead.

PAINTABILITY:
Paintable with exterior latex paints/stains after 4 hours and interior latex paints/stains after 24-48 hours (more for humid conditions). Paintable with most exterior oil-based paints/stains after 1 week. Note: some low-end, flat latex paints may crack, regardless of cure time.

** Corian®, Lexan®, and Formica® are registered trademarks of their respective owners.*

FEATURES	BENEFITS
• Super elastic, moves instead of tears	Eliminates costly call backs
• Spans gaps up to 2" wide with no slump	Stays where it's applied
• Powerful adhesion	Won't tear or pull away
• High durability	Performs well in most any type of climate
• Water-based	Easy to tool and clean up
• Low VOC	Meets strictest VOC requirements; environmentally friendly
• Superb paintability	Compatible with latex paint and most oil-based paints, sealers and stains
• Freeze-thaw stable	Simply thaw & apply, no wasted product
• Limited Lifetime Warranty	Have confidence that you're using the right product
• Full 10.5 oz. in every cartridge	More for your money
• Won't cause paint gloss	No more shiny caulk lines
• Exclusive stop flow plunger	Less waste, less mess

LAMTEC®
CORPORATION

WMP-10

POLYPROPYLENE / SCRIM / KRAFT

Meets ASTM C1136, Type II, IV

FACING COMPOSITION	DESCRIPTION	VALUES (ENGLISH)	VALUES (METRIC)
White Film	Metallized Polypropylene	0.0015 inch	38.1 micron
Adhesive	Flame Resistant		
Reinforcing	Tri-directional Fiberglass/Polyester	5 / inch (MD) 5 / inch (XD)	20 / 100 mm (MD) 20 / 100 mm (XD)
Kraft	White	14 lbs / 3000 ft²	23 g / m²

PHYSICAL PROPERTIES	TEST METHOD	VALUES (ENGLISH)	VALUES (METRIC)
Basis Weight	Scale	19 lbs / 1000 ft²	93 g / m²
Permeance (WVTR)	ASTM E96 Procedure A	0.02 perm (grains/hr·ft²·in Hg)	1.15 ng / N·s
Bursting Strength	ASTM D774	65 psi	4.6 kg / cm²
Puncture Resistance	ASTM C1136	125 beach units	3.7 Joules
Tensile Strength	ASTM C1136	40 lbs/inch width (MD) 35 lbs/inch width (XD)	7.0 kN / m (MD) 6.1 kN / m (XD)
Caliper / Thickness	Micrometer	0.009 inch	229 micron
Accelerated Aging	30 Days @ 95% RH, 120°F (49°C)	No Corrosion No Delamination	No Corrosion No Delamination
Low Temperature Resistance	ASTM D1790 -40°F (-40°C)	Remains Flexible No Delamination	Remains Flexible No Delamination
High Temperature Resistance	4 hours @ 240°F (116°C)	Remains Flexible No Delamination	Remains Flexible No Delamination
Water Immersion	24 hours @ 73°F (23°C)	No Delamination	No Delamination
Mold Resistance	ASTM C665 / C1338	No Growth	No Growth
Dimensional Stability	ASTM D1204	0.25%	0.25%
Light Reflectance	ASTM C523	85%	85%

FIRE TESTING	UL-723 / ASTM E84		CAN ULC-S102M		BRITISH STANDARD 476
	Flame Spread	Smoke Developed	Flame Spread	Smoke Developed	Parts 6 and 7 Summary Report
Film Exposed	10	10	15	30	Class 0 Surface
Kraft Exposed	15	5	15	45	

Physical Properties based upon statistical averages, Weight / Thickness +/- 10%

"LAMTEC" AND "WMP" ARE REGISTERED TRADEMARKS OF LAMTEC CORPORATION

Lamtec Corporation Bartley-Chester Road P.O. Box 37 Flanders, New Jersey 07836-0037 USA

Phone: (973) 584-5500
(800) 852-6832

www.lamtec.com

Fax: (973) 584-5178
(888) 852-6832

5/04

FOAM-LOK™ 2000-4G

Closed-Cell Spray Insulation

FOAM-LOK™ SPRAY FOAM INSULATION

Product Use and Design

FOAM-LOK™ 2000-4G is a **Closed-Cell** spray applied foam, which was developed using an EPA approved 4th generation blowing agent which when installed following application guidelines adheres tenaciously to framing members and substrates. **FOAM-LOK™ 2000-4G Closed-Cell** spray foam provides superior energy economy and durability while significantly reducing unmanaged moisture and air infiltration.

As a component of a "systems approach" to proper building envelope construction, **FOAM-LOK™ 2000-4G Closed-Cell** spray foam provides exceptional performance in minimizing heat transfer, moisture gain, air leakage, and improving racking strength.

TYPE : I, II, III, IV, V (A&B) Construction

Recommended Product Applications

- Walls
- Floors
- Unvented Crawl Spaces
- Concrete Slabs
- Cold Storage
- Unvented Attics
- Vented Attics
- Vented Crawl Spaces
- Ducts
- Freezers
- Ceilings
- Piping
- Foundations
- Tanks
- Coolers

Recommended Processing Parameters

Processing Designation	Regular
Winter	20 - 45°F
Regular	35 - 70°F
Summer	65 - 100°F+

Optimum hose pressure and temperature may vary as a function of the type of equipment, ambient and substrate conditions, and the specific application. It is the responsibility of the applicator to properly interpret equipment technical literature, particularly information that relates acceptable combinations of gun chamber size, proportioner output, and material pressures.

Processing Designation	FOAM-LOK™ 2000-4G
Equipment Dynamic Pressure	1,000 - 1,400 psi
Preheat Temperature	125 - 135 °F (52 - 57° C)
Hose Heat Temperature	125 - 135 °F (52 - 57° C)
Drum Storage Temperature	65 - 85 °F (18 - 30° C)
Shelf Life:	6 months when stored properly.

- 2:1 transfer pumps are recommended for material transfer from container to the proportioner.

- CAUTION: Extreme care must be taken when removing and reinstalling drum transfer pumps so as NOT to reverse the "A" and "B" components.

- Do not circulate or mix other suppliers' "A" or "B" component into **FOAM-LOK™ 2000-4G** containers.

Physical Properties

Properties	Test Method/ Requirements	Value
Aged "R" Value	ASTM C518	1" - 6.2 per inch 4" - 6.8 per inch
Compressive Strength	ASTM D1621	25-30 psi
Core Density	ASTM D1622	2.0-2.2 lbs./ft3
Air Leakage	ASTM E283-04	< 0.02L/s/M2 at 1.0 inches
Inflitration		.008/L/S/m^2 at 1"
Exfiltration		.009/L/S/m^2 at 1"
Closed-Cell Content	ASTM D2856	> 90%
Water Absorption	ASTM D2842	2.36 %
Water Vapor Transmission @ 74°F, perm inch	ASTM E96 2.5 max	1.4 perms @ 1" .95 perms @ 1.4"
Dimensional Stability 28 days at 160°F, 100%RH	ASTM D2126 15% max by volume change	≤4%
Flammability	NFPA 259	1870 Btu/ft^2 21.3 MJ/m^2

Credentials/Certifications

- **CCRR 1025**

FOAM-LOK™ 2000-4G is a **Class I** formulation, as Tested per ASTM E84, and at a thickness of 4.0 inches possesses the flammability characteristics shown below: (UL 723, NFPA 255, UBC 8-1)

ASTM Method E84	Class I
Flame Spread	≤25 - <15>
Smoke Development	≤450 - <350>

ASTM E-119	1 Hour Load Bearing - Wood Stud
	2 Hour Non-Load Bearing - Wood Stud
	1 Hour Non-Load Bearing - Steel Stud
* Complies with testing per NFPA 285 maximum thickness 3 1/2" in specific constructions	

For specific construction requirement of ASTM E119 and NFPA 285 testing please contact Lapolla Technical Group or your sales representative.

*Diversified Testing Modified NFPA 286 PER AC 377 Appendix X	
Location	**SPF Thickness ***
Wall Cavities - "8	200 mm
Ceiling Cavities in Attics and Crawl Spaces - 12"	300 mm

- No Ignition Barrier Required

FOAM-LOK™ 2000-4G

Closed-Cell Spray Insulation

Rev Date 08/11/16

FOAM-LOK™
SPRAY FOAM INSULATION

Room Corner Fire Testing*
With 1/2" Thermal Barrier (Sheetrock)

*NFPA 286	
Location	**SPF Thickness ***
Wall Cavities	Up to 12 in (305mm)
Ceiling Cavities	Up to 12 in (305mm)

***THESE VALUES REFER TO THE TOTAL THICKNESS OF THE PRODUCT TESTED, NOT THE MAXIMUM THICKNESS ALLOWED PER PASS OR APPLICATION. THIS FOAM MUST NOT BE APPLIED IN EXCESS OF 5.5 INCHES PER APPLICATION. THE FOAM SHOULD BE ALLOWED TO COOL FOR 20 TO 30 MINUTES OR UNTIL THE SURFACE TEMPERATURE HAS RETURNED TO AMBIENT BEFORE ADDITIONAL APPLICATIONS OF FOAM ARE ATTEMPTED. FOAM APPLIED IN EXCESS OF 5.5 INCHES OR WITHOUT ALLOWING FOR COOLING MAY RESULT IN, BUT IS NOT LIMITED TO EXCESS HEAT BUILD-UP AND RESULT IN FIRE OR THE GENERATION OF OFFENSIVE ODORS THAT MAY NOT DISSIPATE WITH TIME.**

LIMITATIONS:

ONLY WOOD AND CONCRETE MAY FOAM BE APPLIED IN 5.5 INCHES PER APPLICATON. METAL THINNER THAN 22 GAUGE AND SHEET ROCK SUBSTRATES SHOULD BE APPLIED AT 1 INCH FOR THE FIRST PASS. LOW VOLTAGE WIRING SHOULD NOT BE ENCASED IN A SINGLE 5.5 INCH PASS.

Thermal Barrier

IRC and IBC codes require that SPF be separated from the interior of a building by an approved fifteen (15) minute thermal barrier, such as 1/2" gypsum wall board or equivalent, installed per manufacturer's instructions and corresponding code requirements. There are exceptions to the thermal barrier requirement: (1) Code authorities may approve coverings based on fire tests specific to the SPF application. For example, covering systems that successfully pass large scale tests may be approved by code authorities in lieu of a thermal barrier; (2) SPF protected by 1" thick masonry does not need a thermal barrier. Certain materials that offer protection from ignition, called "ignition barriers," may not be considered as thermal barrier alternatives unless they comply with NFPA 286 or other full-scale burn tests. Applicators should request test data and code body approvals or other written indications of acceptability under the code to be sure that the product selected offers code-compliant protection.

Vapor Retarder

FOAM-LOK™ 2000-4G qualifies as a vapor retarder as defined by the International Code Council and ASHRAE (class II) at a minimum thickness of 1 1/2 inches. Building construction types with a persistent, high moisture drive require additional moisture remediation, as local building codes dictate. This is including climate zones 5 and higher in the U.S., as defined in 2004 Supplement to the IRC, Table N1101.2.

Safety and Handling

Respiratory protection is **MANDATORY!** Lapolla requires that supplied air and a full face mask be used during the application of any spray applied foam system. Contact Lapolla Industries for a copy of the Model Respiratory Protection Program developed by CPI or visit their web site at www.polyurethane.org. Persons with known respiratory allergies should avoid exposure to the "A" component. The "A" component contains reactive isocyanate groups while the "B" component contains amine and/or catalysts with blowing agents. Both materials must be handled and used with adequate ventilation. The vapors must not exceed the TLV (0.02 parts per million) for isocyanates. Avoid breathing vapors. Wear a NIOSH approved respirator. If inhalation of vapors occur, remove victim from contaminated area and administer oxygen if breathing is difficult. Call a physician immediately. Avoid contact with skin, eyes, and clothing.

Open containers carefully, allowing any pressure to be relieved slowly and safely. Wear chemical safety goggles and rubber gloves when handling or working with these materials. In case of eye contact, immediately flush with large amounts of water for at least fifteen minutes. Consult a physician immediately. In case of skin contact, wash area with soap and water. Wash clothes before reuse. Positive pressure ventilation of the work area is required to minimize the accumulation of vapors in the work area during the application. Improper application techniques of this foam system must be avoided. This includes excessive thickness, off ratio material, and spraying into rising foam. The potential results of improperly applied materials may include but is not limited to, excessive heat build-up, and may result in a fire or offensive odors which may not dissipate with time and/or poor product performance due to improper density of the applied material. Large masses of sprayed materials should be avoided. When large masses are generated they should be removed from the area, cut into small pieces and allowed to cool before disposal. Failure to follow this recommendation may result in a fire. It is recommended that a fire extinguisher be located in an easily accessible portion of the work area.

Applicators should ensure the safety of the jobsite and construction personnel by posting appropriate signs warning that all "hot work" such as welding, soldering, and cutting with torches should take place no less than 35 feet from any exposed foam. If "hot work" must be performed all spray polyurethane foam should be covered with an appropriate fire or welder's blanket, and a fire watch should be provided.

In Case of Spills or Leaks

- Utilize appropriate personal protective equipment
- Ventilate area to remove vapors
- Contain and cover spilled material with a loose, absorbent material such as oil-dry, vermiculite, sawdust or Fuller's earth
- Shovel absorbent waste material into proper waste containers
- Wash the contaminated areas thoroughly with hot, soapy water
- Report sizeable spills to proper environmental agencies

In Case of Fire

Extinguishing Media-Dry chemical extinguishers such as mono ammonium phosphate, potassium sulfate, and potassium chloride. Additionally, carbon dioxide, high expansion (proteinic) chemical foam, or water spray for large fires.

DISCLAIMER

The data presented herein is not intended for use by nonprofessional applicators, or those persons who do not purchase or utilize this product in the normal course of their business. The potential user must perform any pertinent tests in order to determine the product's performance and suitability in the intended application, since final determination of fitness of the product for any particular use is the responsibility of the buyer.

All guarantees and warranties as to products supplied by Lapolla Industries shall have only those guarantees and warranties expressed in writing by the manufacturer. The buyer's sole remedy as to any material claims will be against the applicator of the product. The aforementioned data on this product is to be used as a guide and is subject to change without notice. The information herein is believed to be reliable, but unknown risks may be present. **NO WARRANTIES, EXPRESSED OR IMPLIED, INCLUDING PATENT WARRANTIES OR WARRANTIES OF MERCHANTABILITY OR FITNESS FOR USE, ARE MADE BY LAPOLLA WITH RESPECT TO OUR PRODUCTS OR INFORMATION SET FORTH HEREIN.**

To the best of our knowledge, the technical data contained herein is true and accurate at the date of issuance and is subject to change without prior notice. User must contact Lapolla Industries, Inc. to verify correctness before specifying or ordering. No guarantee of accuracy is given or implied. We guarantee our products to conform to Lapolla Industries, Inc.'s quality control. We assume no responsibility for coverage, performance or injuries resulting from use.

Copyright © 2016 Lapolla Industries, Inc. All rights reserved. Lapolla® and Foam-LOK™ are trademarks of Lapolla Industries, Inc. in the US and other countries.

WHERE NOT TO USE:

- Areas of water submersion or frequent, prolonge d puddling
- Areas with high foot and/or vehicle-traffic (driveways, sidewalks, decks, patios, etc.)
- Roofs exposed to prolonged dampness (use Sashco's Through the Roof!® instead)
- Big Stretch Clear should not be used on copper flashing. Colored Big Stretch, Sashco's Lexel® or Sashco's Through the Roof!® are best for this application.
- Will not adhere to or is incompatible with Kynar®*, Polypropylene, Waxes, Polyethylene, and Silicone.

APPLICATION:

- Lower temperatures and higher humidity will slow cure time. Allow 1-3 days curing before exposure to direct rainfall. Use plastic sheeting with good airflow underneath to protect the product if rain is expected sooner.
- Natural shrinkage will give the joint a concave appearance; multiple applications may be needed to fill the joint flat.
- If dirt or oils are present on the substrate, wash with any household cleaner, rinse to remove and allow to thoroughly dry.
- Remove any old caulk, especially silicone and all silicone residue. Use a silicone remover such as McKanica®* Silicone Caulk Remover.
- Insert backer rod into joints deeper than 1/2" to provide for proper sealant depth and a stronger, longer lasting seal.
- Choose bead size and cut the nozzle. Puncture the inner seal.
- Gun Big Stretch into the joint.
- Tool for a smoother bead using a damp foam or paint brush with a light, skimming touch, or use a beading tool.

STORAGE AND CLEAN-UP:

- Clean up tools and hands with warm water and soap.
- Leftover Big Stretch can be stored if the nozzle is tightly wrapped with plastic wrap and a rubber band.

TYPICAL PROPERTIES:

PROPERTY	VALUE
Joint Size	Maximum 2"
Application Range	40°F to 120°F (4°C to 49°C) surface temperature
Service Range	-30°F to 250°F (-34°C to 121°C)
Tensile Properties	Recovery at 50% stretch: 100% in 3 minutes Recovery at 100% stretch: 96% in 5 minutes
VOC	59.8 g/L < 1.5% by weight

TEST DATA:

PROPERTY	RESULTS	TEST METHOD
Durability	25% total joint movement (10 cycles @ -15°F (-26°C))	ASTM C719
Hardness, Shore A	32 (21-day cure)	ASTM C661
Slump	< 1/8"	ASTM D2202
Solids	83.8% by weight (pigmented) 61.2% by weight (clear)	ASTM C1250
Extrusion Rate	750 g/min (1/8" orifice at 40 psi)	ASTM C603
Freeze-Thaw Stability	Passes 10 cycles 0°F to 70°F (-18°C to 21°C)	ASTM C731
Low Temp. Flexibility	Pass (not artificially weathered)	ASTM C734
Tack-free	Less than 30 minutes	ASTM C679
Cured	4-5 days (dependent on temperature, humidity and bead size)	ASTM C679
Adhesion-in-peel Passing Substrates	See "ADHERES TO" section on front page	ASTM C794

SPECIFICATIONS:

- Meets FHA requirements.
- Meets or exceeds Federal Specification:
  - TT-S-00230 C
  - ASTM C834
  - ASTM C920, Type S, NS, Class 25, Use NT, M, A. Exceeds 10% weight loss.

The data reported here are believed to be reliable.
No warranty is made concerning the accuracy of or the results obtained from their use.
** Kynar® and McKanica® are registered trademarks of their respective owners.*

Keep out of reach of children.

Limited Lifetime Warranty: Sashco warrants this product will substantially meet published specifications on the date of sale. If it fails to do so, return unused portion with original sales receipt for replacement or refund, at Sashco's sole option. These are purchaser's sole and exclusive remedies for any breach of warranty. Purchaser must determine suitability of product for purchaser's specific needs and assumes all risk associated with its use. Sashco will not be liable for direct or indirect damages.

Except as stated above there are no warranties for this product. **The foregoing express warranty is in lieu of all other warranties, express or implied, including without limitation implied warranties of merchantability or fitness for a particular purpose, which warranties are specifically excluded and disclaimed.** This Limited Warranty gives you specific legal rights. You may have other rights which vary from state to state. Some states do not allow exclusion of implied warranties in consumer or other sales, limitations on the duration of implied warranties, or exclusion or limitation of incidental or consequential damages. Thus, the limitations or exclusions contained above may not apply to you depending upon your specific circumstances.

Visit www.sashco.com for information on other Sashco high performance products.

sashco® Products That Work®

800-767-5656 • www.sashco.com
10300 E. 107th Pl., Brighton, CO 80601
Made in the USA

VISCO
WEATHER SEAL PRODUCTS

door ASTRAGALS

FS325 - Wool Pile Brush Astragal With Fin

Construction: Extruded Aluminum
Insert: .500" or .880" Wool Pile Brush.
Finish: Black
Standard Lengths: 7ft. or 8ft. pieces, 2 piece set.
Custom lengths also available.

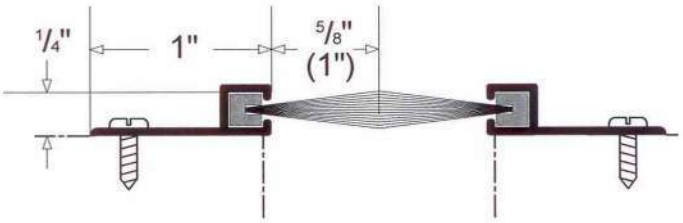

door BOTTOMS & SWEEPS

FS300 - Wool Pile Brush Sweep With Fin

Construction: Extruded Aluminum
Insert: .500" or .880" Wool Pile Brush.
Finish: Black
Standard Lengths: 36, 42, 48 inches.
Custom lengths also available.

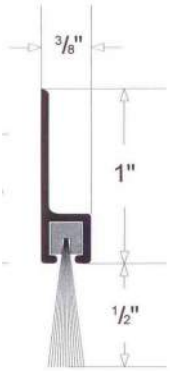

TS100 Door Triple Sweep

Construction: Extruded Aluminum
Insert: 3/4" Vinyl Insert
Finish: Black
Lengths: 36", 42", or 48", or by the linear foot

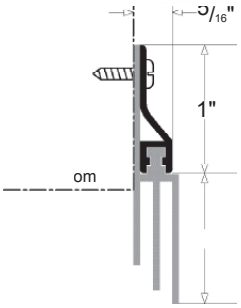

door WEATHERSTRIPPING

DXL1000 - Door Weatherstripping

Construction Q-Lon: Extruded aluminum. Mitered corners ensure a secure fit with slotted mounting holes for easy adjustment.
Insert: Soft cell foam insert. Foam has thermoplastic cover and will not deteriorate.
Finish: Black
Set: 1-3' piece and 2-7' pieces. Custom lengths also available.

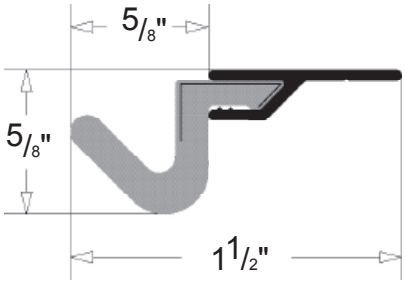

DXL320 - Door Weatherstripping

Construction Q-Lon: Extruded aluminum. Mitered corners ensure a secure fit with slotted mounting holes for easy adjustment.
Insert: Soft cell foam insert. Foam has thermoplastic cover and will not deteriorate.
Finish: Black

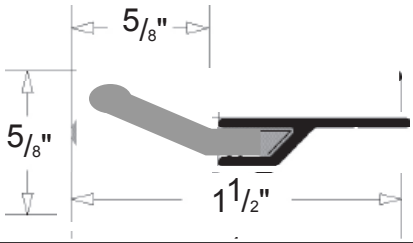

Phone: (401) 831-1665 **Toll Free:** 1-800-628-9680 **Fax:** (401) 751-2720 **Web:** www.viscoproduct.com **e-mail:** info@visco.com

VISCO Weather Seal Products 7 Victory Avenue, Johnston, RI 02919

Pocket Q-LON® Weatherseals

QWS-440

Pocket Opening: .125" (3.2mm)
Reach: .280" (7.1mm)

QWS-525

Pocket Opening: .140" (3.5mm)
Reach: .225" (5.7mm)

QWS-530

Pocket Opening: .125" (3.2mm)
Reach: .250" (6.4mm)

QWS-580

Pocket Opening: .125" (3.2mm)
Reach: .345" (8.8mm)

QWS-591

Pocket Opening: .215" (5.5mm)
Reach: .402" (10.2mm)

APTUS Plastic

AP-5210

Pocket Opening: .150" (3.8mm)
Reach: .150" (3.8mm)

AP-5211

Pocket Opening: .150" (3.8mm)
Reach: .340" (8.6mm)

Pocket SKIRTING Textile Weatherseals

SK-510

Pocket Opening: .090" (2.3mm)

SK-519

Pocket Opening: .090" (2.3mm)

SK-527

Pocket Opening: .090" (2.3mm)

SK-560

Pocket Opening: .090" (2.3mm)

APTUS Plastic

KP-45

Pocket Opening: .158" (4.0mm)

Surface Q-LON® Weatherseals

QWS-D

Width: .240" (6.1mm)
Reach: .140" (3.6mm)

QWS 6x6

Width: .235" (6.0mm)
Reach: .235" (6.0mm)

QWS 3/8x1/4

Width: .375" (9.5mm)
Reach: .250" (6.4mm)

QWS 3/8x3/8

Width: .375" (9.5mm)
Reach: .375" (9.5mm)

QWS 1/2x3/8

Width: .500" (12.7mm)
Reach: .375" (9.5mm)

QDS-375 QFS-375

Width: .420" (10.7mm)
Reach: .385" (9.8mm)

QDST 675

Width: .580" (14.7mm)
Reach: .675" (17.1mm)

Q-LON Corner Seals
2 Widths

Width: 1.313" (33.4mm)
Reach: .218" (5.5mm)

Width: 1.688" (42.9mm)
Reach: .218" (5.5mm)

Replacement Door Seal
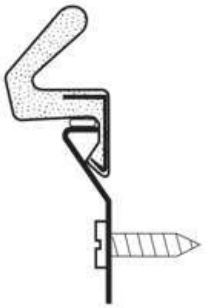

Surface Textile Weatherseals

FIN-SEAL Door Sweep

Tape Back Pile Weatherstripping

Metal Back Pile Weatherstripping

FIN-SEAL Corner Seal

Corner seal profiles not shown to size.

POLY-BOND Corner Seal

Surface POLYFLEX® Plastic Weatherseals

PF-102

PF-114

PF-512

VISCO Weatherseal Products is an authorized dealer of Schlegel Systems, Inc.

Metroflush®

TAG _____

Z6200-HET

1.28 Exposed Metroflush Piston Operated Flush Valve
For Water High Efficiency Water Closets

ADA DESIGNED

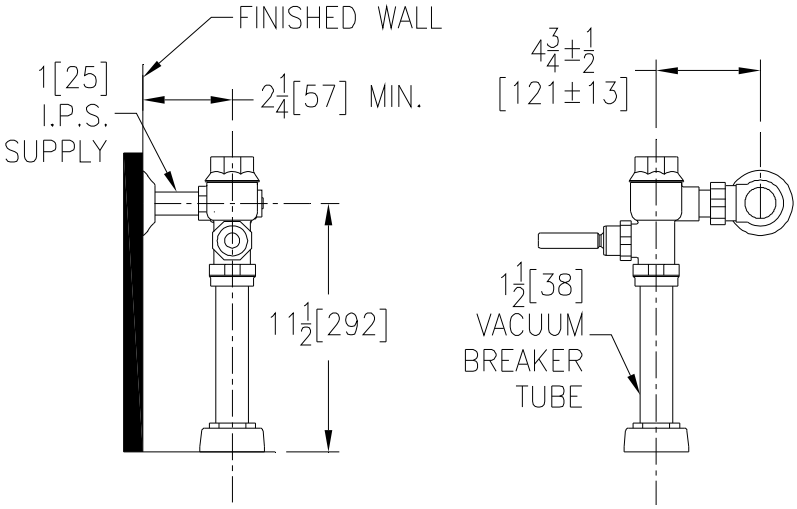

Suffix Options (Check/Specify Appropriate Options)

☐	**-L**	1" [25mm] Push Button
☐	**-VC**	Vandal Resistant Stop Cap
☐	**-XYV**	Less Vacuum Breaker
☐	**-YJ**	Split Ring Pipe Support
☐	**-YK**	Solid Ring Pipe Support
☐	**-YL**	Solid Ring Pipe Support with Bumper
☐	**-YO**	Bumper on Angle Stop
☐	_____	Other

ENGINEERING SPECIFICATION: ZURN Z6200-HET Metroflush® Piston Operated Exposed Closet Flush Valve for 1.28 gpf Water Closet- The Ecovantage® MetroFlush® is an exposed, quiet type, chrome plated flushometer valve with polished exterior. Complete with Zurn's 1.28 gpf MetroVantage®, chloramine resistant, piston with a clog resistant, filtered by-pass. The valve is ADA compliant with a non-hold open and no-leak handle feature, high back pressure vacuum breaker, one piece hex coupling nut, adjustable tailpiece, spud coupling and flange for top spud connection. Control stop has internal siphon-guard protection, sweat solder kit, and a cast wall flange with set screw. Internal seals are made of chloramine resistant materials.

WaterSense Meets EPA Criteria
Certified by IAPMO R&T

∗This product should be used with a WaterSense labeled counterpart with a compatible flush volume to ensure that the entire system meets the requirements for water efficiency and performance.

Architectural/Engineering Approval

The information contained in this document is subject to change without notice.

ZURN INDUSTRIES, LLC. ♦ COMMERCIAL BRASS OPERATION ♦ 5900 ELWIN BUCHANAN DRIVE ♦ SANFORD NC 27330
Phone: 1-800-997-3876 ♦ Fax: 919-775-3541 ♦ World Wide Web: www.zurn.com
In Canada: ZURN INDUSTRIES LIMITED ♦ 7900 Goreway Drive Unit 10 ♦ Brampton, Ontario L6T5W6 ♦ Phone: 905-405-8272 Fax: 905-405-1292

MetroFlush® is a registered trademark of Zurn Industries, LLC.

Rev. E
Dwg. No. 200248
Date: 8/24/2017
Product No. Z6200-HET

Madera™ FloWise® 15" Height Elongated Flushometer Toilet

VITREOUS CHINA LESS EVERCLEAN®

Madera™ FloWise® 15" Height Elongated LESS EverClean®

- Floor mount flushometer valve toilet
- Vitreous china
- High Efficiency, Low Consumption. Operates in the range of 1.1 gpf to 1.6 gpf (4.2 Lpf to 6.0 Lpf)
- Meets definition of HET (High Efficiency Toilet) when used with a high efficiency flush valve (1.28 gpf or 1.6 / 1.1 gpf dual flush)
- Fully glazed 2-1/8" trapway
- Elongated bowl
- 10" or 12" roughing-in
- 15" rim height
- Condensation channel
- Powerful direct-fed siphon jet action
- 10" x 12" water surface area
- 1-1/2" inlet spud
- 2 bolt caps

❏ **2234.001** Elongated bowl only, top spud
❏ **2623.001** Elongated bowl only, top spud with slotted rim for bedpan holding
❏ **2624.001** Elongated bowl only, back spud

SEE REVERSE FOR ROUGHING-IN DIMENSIONS

System MaP* Score:
- 1,000 grams of miso @ 1.1 gpf, 1.28 gpf or 1.6 gpf when used with an American Standard flush valve

* Maximum Performance (MaP) testing performed by IAPMO R&T Lab. MaP Report conducted by Veritec Consulting, Inc. and Koeller and Company.

Component Parts:
❏ **047007-0070A** Inlet Spud (furnished with bowl)
❏ **481310-100** Bolt caps with retainers (furnished with bowl)

Nominal Dimensions:
718 x 356 x 381mm
(28-1/4" x 14" x 15")

Fixture only, less seat and flush valve

Recommended working pressure–between 25 psi at valve when flushing and 80 psi static

Compliance Certifications - Meets or Exceeds the Following Specifications:
- ASME A112.19.2 / CSA B45.1 for Vitreous China Fixtures

To Be Specified:
❏ Color: ❏ White
❏ Seat:
  ❏ American Standard #5901.100 Heavy duty open front less cover
  ❏ American Standard #5905.100 Extra heavy duty open front less cover
❏ Flushometer Valve:
  ❏ 1.6 gpf:
    ❏ Sensor-Operated: American Standard Selectronic® DC Power #6065.161.002 (Top Spud)
    ❏ Sensor-Operated: American Standard Selectronic® AC Power #6067.261.002 (Back Spud)
    ❏ Manual: American Standard #6047.161.002 (Top Spud)
  ❏ 1.28 gpf:
    ❏ Sensor-Operated: American Standard Selectronic® DC Power #6065.121.002 (Top Spud)
    ❏ Sensor-Operated: American Standard Selectronic® AC Power #6067.221.002 (Back Spud)
    ❏ Manual: American Standard #6047.121.002 (Top Spud)
  ❏ 1.6 / 1.1 gpf Dual Flush:
    ❏ Sensor-Operated: American Standard Selectronic® DC Power #6065.761.002 (Top Spud)

ENVIROMENTAL PRODUCT DECLARATION

When used with **1.1 or 1.28 gpf** toilet flush valves

WATER EFFICIENT

© 2018 AS America Inc.

Madera™ FloWise® 15" Height Elongated Flushometer Toilet

VITREOUS CHINA LESS EVERCLEAN®

2234.001/2623.001

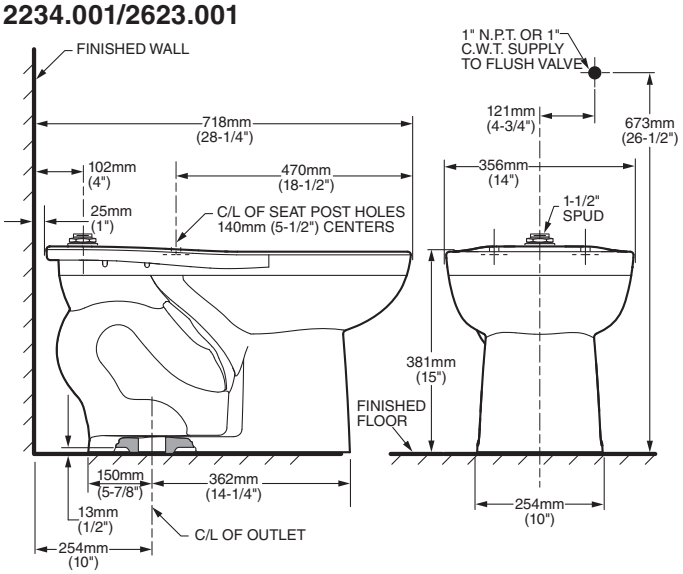

2624.001

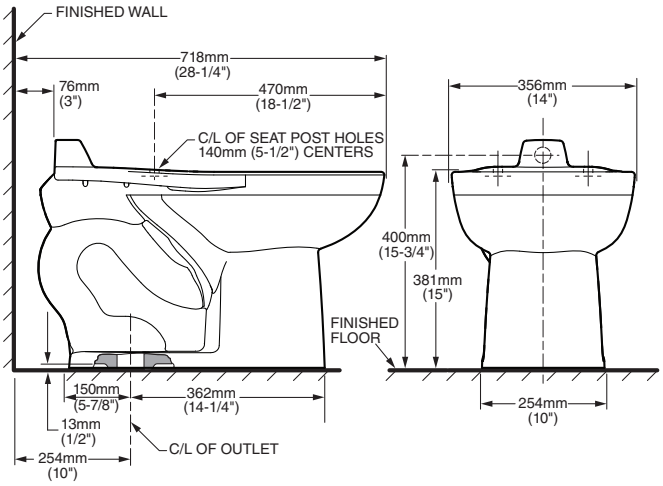

NOTES:
PRODUCT 2234 SHOWN, 2623 SAME EXCEPT WITH SLOTTED RIM FOR BED PAN HOLDING.
TO COMPLY WITH AREA CODE GOVERNING THE HEIGHT OF VACUUM BREAKER ON THE FLUSHOMETER VALVE, THE PLUMBER MUST VERIFY DIMENSIONS SHOWN FOR SUPPLY ROUGHING.
THIS TOILET DESIGNED TO ROUGH-IN AT A MINIMUM DIMENSION OF 254MM (10") AND A MAXIMUM DIMENSION OF 305MM (12") FROM FINISHED WALL TO C/L OF OUTLET.
FLUSHOMETER VALVE NOT INCLUDED WITH FIXTURE AND MUST BE ORDERED SEPARATELY. FLUSHOMETER VALVE REQUIREMENTS FOR 12" (305MM) ROUGH-IN: SWEAT EXTENSION NIPPLE IS REQUIRED. REFER TO VALVE MANUFACTURER AND LOCAL CODES.

IMPORTANT: Dimensions of fixtures are nominal and may vary within the range of tolerances established by ANSI Standard A112.19.2. These measurements are subject to change or cancellation. No responsibility is assumed for use of superseded or voided pages.

© 2018 AS America Inc.

PART OF LIXIL

Afwall® Millennium™ FloWise® Elongated Flushometer Toilet

VITREOUS CHINA LESS EVERCLEAN®

BARRIER FREE

Afwall® Millenium™ FloWise® Elongated Flushometer Toilet LESS EverClean®

- Wall-mounted flushometer valve toilet
- Vitreous china
- Conventional glaze
- High Efficiency, Low Consumption. Operates in the range of 1.1 gpf to 1.6 gpf (4.2 Lpf to 6.0 Lpf)
- Meets definition of HET (High Efficiency Toilet) when used with a high efficiency flush valve (1.1 gpf - 1.6 gpf or 1.28/1.1 gpf dual flush)
- Maximum Performance (MaP) score of 1,000 grams at 1.1 gpf - 1.6 gpf
- Condensation channel
- Concealed trapway design
- Elongated bowl
- Powerful direct-fed siphon jet action
- 1-1/2" inlet spud
- Fully-glazed 2-1/8" trapway
- 10" x 12" water surface area
- Tested to support static weight load of 1,000 lbs. (454 kg)

❏ **2257.101** Elongated bowl only, top spud
❏ **2633.101** Elongated bowl only, top spud with slotted rim for bedpan holding
❏ **2634.101** Elongated bowl only, back spud

System MaP* Score:
- 1,000 grams of miso @ 1.1 gpf to 1.6 gpf when used with an American Standard flush valve

* Maximum Performance (MaP) testing performed by IAPMO R&T Lab. MaP Report conducted by Veritec Consulting, Inc. and Koeller and Company.

Component Parts:
❏ **047007-0070A** Inlet Spud (furnished with bowl)

Nominal Dimensions:
660 x 356 x 381mm
(26" x 14" x 15")

Recommended working pressure–between 25 psi at valve when flushing and 80 psi static

Fixture only, less seat, bolt caps, and flushometer valve

Compliance Certifications - Meets or Exceeds the Following Specifications:
- ASME A112.19.2/CSA B45.1 for Vitreous China Fixtures

SEE REVERSE FOR ROUGHING-IN DIMENSIONS

To Be Specified:
❏ Color: ❏ White
❏ Seat:
  ❏ American Standard #5901.100 Heavy duty open front less cover
  ❏ American Standard #5905.100 Extra heavy duty open front less cover
❏ Flushometer Valve:
  ❏ 1.6 gpf:
    ❏ Sensor-Operated: American Standard Selectronic®
      DC Power #6065.161.002 (Top Spud)
      AC Power #6067.161.002 (Top Spud)
    ❏ Manual: American Standard #6047.161.002 (Top Spud)
  ❏ 1.28 gpf:
    ❏ Sensor-Operated: American Standard Selectronic®
      DC Power #6065.121.002 (Top Spud)
      AC Power #6067.121.002 (Top Spud)
    ❏ Manual: American Standard #6047.121.002 (Top Spud)
  ❏ 1.6 / 1.1 gpf Dual Flush:
    ❏ Sensor-Operated: American Standard Selectronic®
      DC Power #6065.761.002 (Top Spud)
      AC Power #6067.761.002 (Top Spud)
  ❏ 1.28 / 1.1 gpf Dual Flush:
    ❏ Sensor-Operated: American Standard Selectronic®
      DC Power #6065.721.002 (Top Spud)
      AC Power #6067.721.002 (Top Spud)

MEETS THE AMERICANS WITH DISABILITIES ACT GUIDELINES AND ANSI A117.1 REQUIREMENTS FOR ACCESSIBLE AND USABLE BUILDING FACILITIES - CHECK LOCAL CODES.
- When installed so top of seat is 432 to 483mm (17" to 19") from the finished floor.

ENVIROMENTAL PRODUCT DECLARATION

When used with **1.1 or 1.28 gpf** toilet flush valves

ADA COMPLIANT

WATER EFFICIENT

© 2018 AS America Inc.

Afwall® Millennium™ FloWise® Elongated Flushometer Toilet

VITREOUS CHINA LESS EVERCLEAN®

BARRIER FREE

2257.101/2633.101

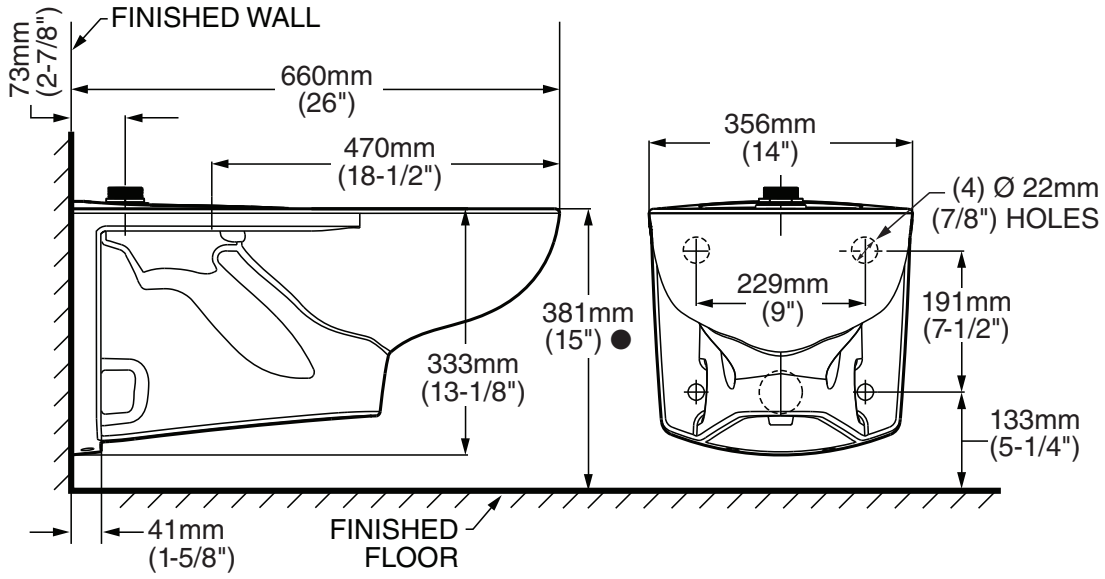

2634.101

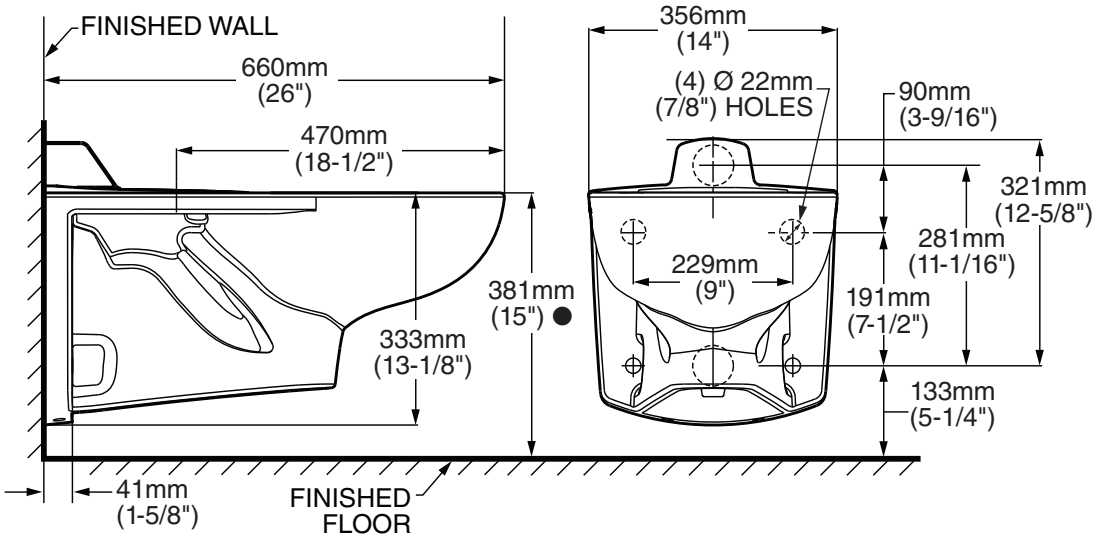

NOTES:

● Toilet designed to meet ADA accessibility standards when top of seat height set at 432 to 483mm (17" to 19") from finished floor.

PRODUCT 2257 SHOWN, 2366 SAME EXCEPT WITH SLOTTED RIM FOR BED PAN HOLDING.
WASTE OUTLET SEAL RING MUST BE NEOPRENE OR GRAPHITE-FELT (WAX RING NOT RECOMMENDED).
SUGGESTED 2mm (1/16) CLEARANCE BETWEEN FACE OF WALL AND BACK OF BOWL.
TO COMPLY WITH AREA CODE GOVERNING THE HEIGHT OF VACUUM BREAKER ON THE FLUSHOMETER VALVE, THE PLUMBER MUST VERIFY DIMENSIONS SHOWN FOR SUPPLY ROUGHING.
FLUSHOMETER VALVE NOT INCLUDED WITH FIXTURE AND MUST BE ORDERED SEPARATELY.
CARRIER FITTING AS REQUIRED TO BE FURNISHED BY OTHERS.
PROVIDE SUITABLE REINFORCEMENT FOR ALL WALL SUPPORT.

IMPORTANT: Dimensions of fixtures are nominal and may vary within the range of tolerances established by ANSI Standard A112.19.2. These measurements are subject to change or cancellation. No responsibility is assumed for use of superseded or voided pages

© 2018 AS America Inc.

PART OF LIXIL

Madera™ FloWise® 16-1/2" Height Elongated Flushometer Toilet

VITREOUS CHINA LESS EVERCLEAN®

BARRIER FREE

Madera™ FloWise® 16-1/2" Height Elongated LESS EverClean®

- Floor mount flushometer valve toilet
- Vitreous china
- High Efficiency, Low Consumption. Operates in the range of 1.1 gpf to 1.6 gpf (4.2 Lpf to 6.0 Lpf)
- Meets definition of HET (High Efficiency Toilet) when used with a high efficiency flush valve (1.28 gpf or 1.6 / 1.1 gpf dual flush)
- Fully glazed 2-1/8" trapway
- Elongated bowl
- 10" or 12" roughing-in
- 16-1/2" rim height for accessible application
- Condensation channel
- Powerful direct-fed siphon jet action
- 10" x 12" water surface area
- 1-1/2" inlet spud
- 2 bolt caps

❏ **3043.001** Elongated bowl only, top spud
❏ **3248.001** Elongated bowl only, top spud with slotted rim for bedpan holding
❏ **3249.001** Elongated bowl only, back spud

System MaP* Score:

- 1,000 grams of miso @ 1.1 gpf, 1.28 gpf or 1.6 gpf when used with an American Standard flush valve

* Maximum Performance (MaP) testing performed by IAPMO R&T Lab. MaP Report conducted by Veritec Consulting, Inc. and Koeller and Company.

Component Parts:

❏ **047007-0070A** Inlet Spud (furnished with bowl)
❏ **481310-100** Bolt caps with retainers (furnished with bowl)

Nominal Dimensions:

718 x 356 x 419mm
(28-1/4" x 14" x 16-1/2")

Fixture only, less seat and flush valve

Recommended working pressure–between 25 psi at valve when flushing and 80 psi static

Compliance Certifications - Meets or Exceeds the Following Specifications:

- ASME A112.19.2 / CSA B45.1 for Vitreous China Fixtures

SEE REVERSE FOR ROUGHING-IN DIMENSIONS

To Be Specified:

❏ Color: ❏ White
❏ Seat:
  ❏ American Standard #5901.100 Heavy duty open front less cover
  ❏ American Standard #5905.100 Extra heavy duty open front less cover
❏ Flushometer Valve:
  ❏ 1.6 gpf:
    ❏ Sensor-Operated: American Standard Selectronic® DC Power #6065.161.002 (Top Spud)
    ❏ Sensor-Operated: American Standard Selectronic® AC Power #6067.261.002 (Back Spud)
    ❏ Manual: American Standard #6047.161.002 (Top Spud)
  ❏ 1.28 gpf:
    ❏ Sensor-Operated: American Standard Selectronic® DC Power #6065.121.002 (Top Spud)
    ❏ Sensor-Operated: American Standard Selectronic® AC Power #6067.221.002 (Back Spud)
    ❏ Manual: American Standard #6047.121.002 (Top Spud)
  ❏ 1.6 / 1.1 gpf Dual Flush:
    ❏ Sensor-Operated: American Standard Selectronic® DC Power #6065.761.002 (Top Spud)

ENVIROMENTAL PRODUCT DECLARATION

When used with **1.1 or 1.28 gpf** toilet flush valves

ADA COMPLIANT

WATER EFFICIENT

MEETS THE AMERICANS WITH DISABILITIES ACT GUIDELINES AND ANSI A117.1 REQUIREMENTS FOR ACCESSIBLE AND USABLE BUILDING FACILITIES - CHECK LOCAL CODES.

© 2018 AS America Inc.

Madera™ FloWise® 16-1/2" Height Elongated Flushometer Toilet

VITREOUS CHINA LESS EVERCLEAN®

BARRIER FREE

3043.001/3248.001

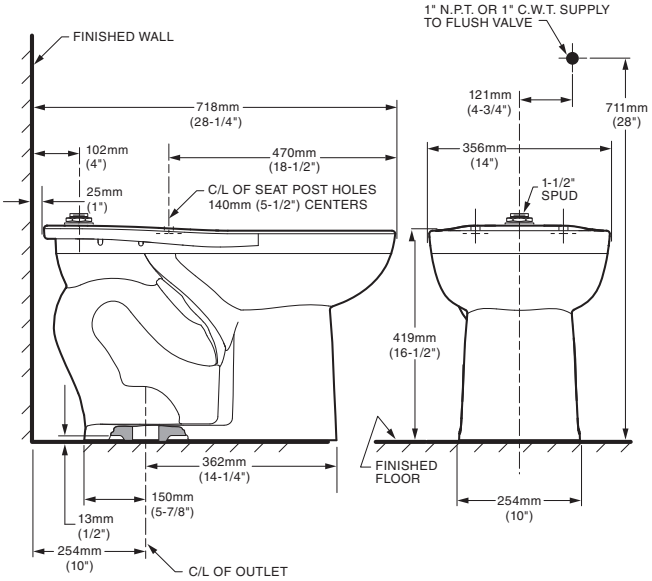

3249.001

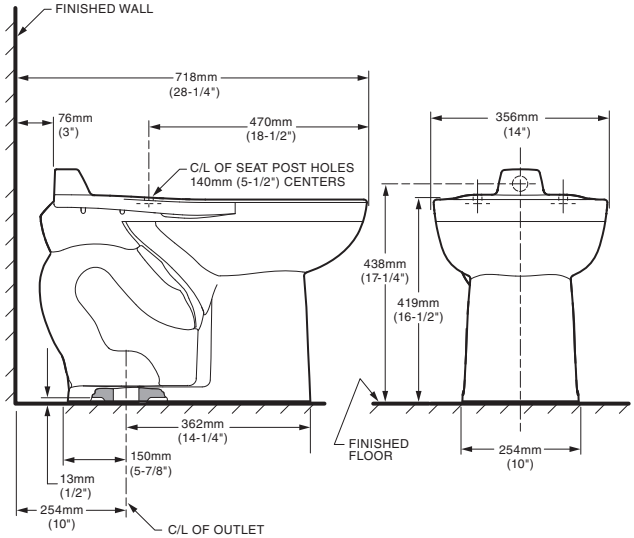

NOTES:
PRODUCT 3043 SHOWN, 3248 SAME EXCEPT WITH SLOTTED RIM FOR BED PAN HOLDING.
TO COMPLY WITH AREA CODE GOVERNING THE HEIGHT OF VACUUM BREAKER ON THE FLUSHOMETER VALVE, THE PLUMBER MUST VERIFY DIMENSIONS SHOWN FOR SUPPLY ROUGHING.
THIS TOILET DESIGNED TO ROUGH-IN AT A MINIMUM DIMENSION OF 254MM (10") AND A MAXIMUM DIMENSION OF 305MM (12") FROM FINISHED WALL TO C/L OF OUTLET.
FLUSHOMETER VALVE NOT INCLUDED WITH FIXTURE AND MUST BE ORDERED SEPARATELY. FLUSHOMETER VALVE REQUIREMENTS FOR 12" (305MM) ROUGH-IN: SWEAT EXTENSION NIPPLE IS REQUIRED. REFER TO VALVE MANUFACTURER AND LOCAL CODES.

IMPORTANT: Dimensions of fixtures are nominal and may vary within the range of tolerances established by ANSI Standard A112.19.2. These measurements are subject to change or cancellation. No responsibility is assumed for use of superseded or voided pages.

© 2018 AS America Inc.

PART OF LIXIL

COMMERCIAL HEAVY-DUTY PLASTIC TOILET SEAT

MODEL #	COLOR #
1055/1055SSC	_____

DESCRIPTION:

Open front less cover, elongated, heavy-duty, injection molded solid plastic toilet seat. Features two molded-in bumpers, non self-sustaining (1055) or self-sustaining (1055SSC) check hinges with non-corrosive 300 Series stainless steel posts, pintles and hardware. This seat complies with American National Standard Z124.5 Toilet (Water Closet) Seats as a class Commercial Heavy Duty.

SPECIFICATIONS:

Size:	Elongated
Material:	Plastic
Style:	Open Front less Cover
Bumpers:	Two
Hinges:	Plastic Non Self-Sustaining (1055) or Self-Sustaining (1055SSC) with 300 Series Stainless Steel Posts and Pintles
Fastening System:	Non-Corrosive 300 Series Stainless Steel Nuts

FEATURES:

Non-Corrosive 300 Series Stainless Steel Posts, Pintles and Nuts

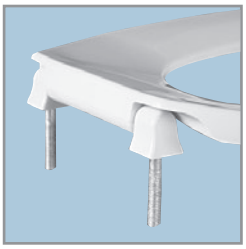

PLASTIC HINGES WITH STAINLESS STEEL POSTS AND PINTLES

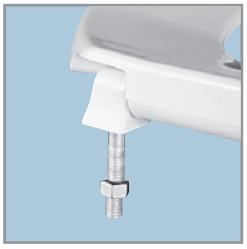

NON-CORROSIVE STAINLESS STEEL NUTS

DIMENSIONS:

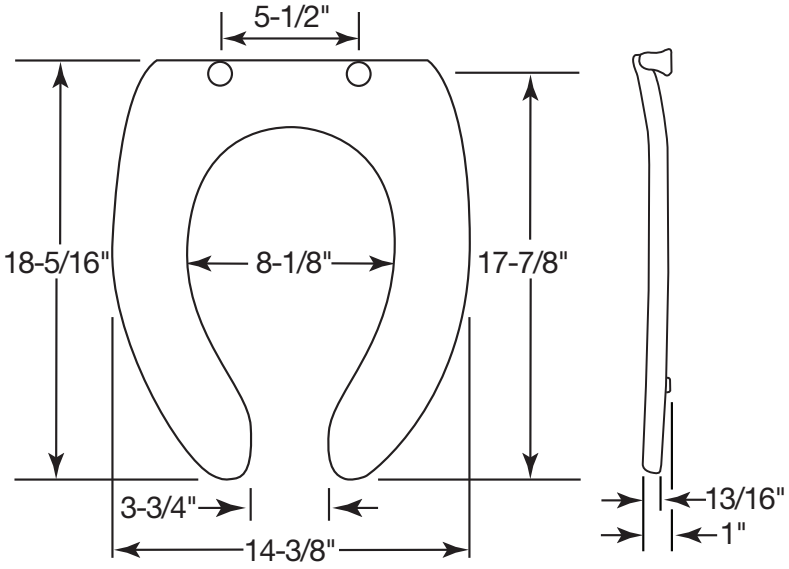

Proudly Made in the USA

Bemis Manufacturing Co., Sheboygan Falls, WI 53085
www.BemisSeats.com
Phone: 920-467-4621 | 800-558-7651 Fax: 920-467-8573
©2010 0B7012284

FLUSH VALVE GUIDE
GUIDE POUR LE ROBINET DE CHASSE
GUÍA DE LA VÁLVULA DE DESCARGA

*Repair Kits

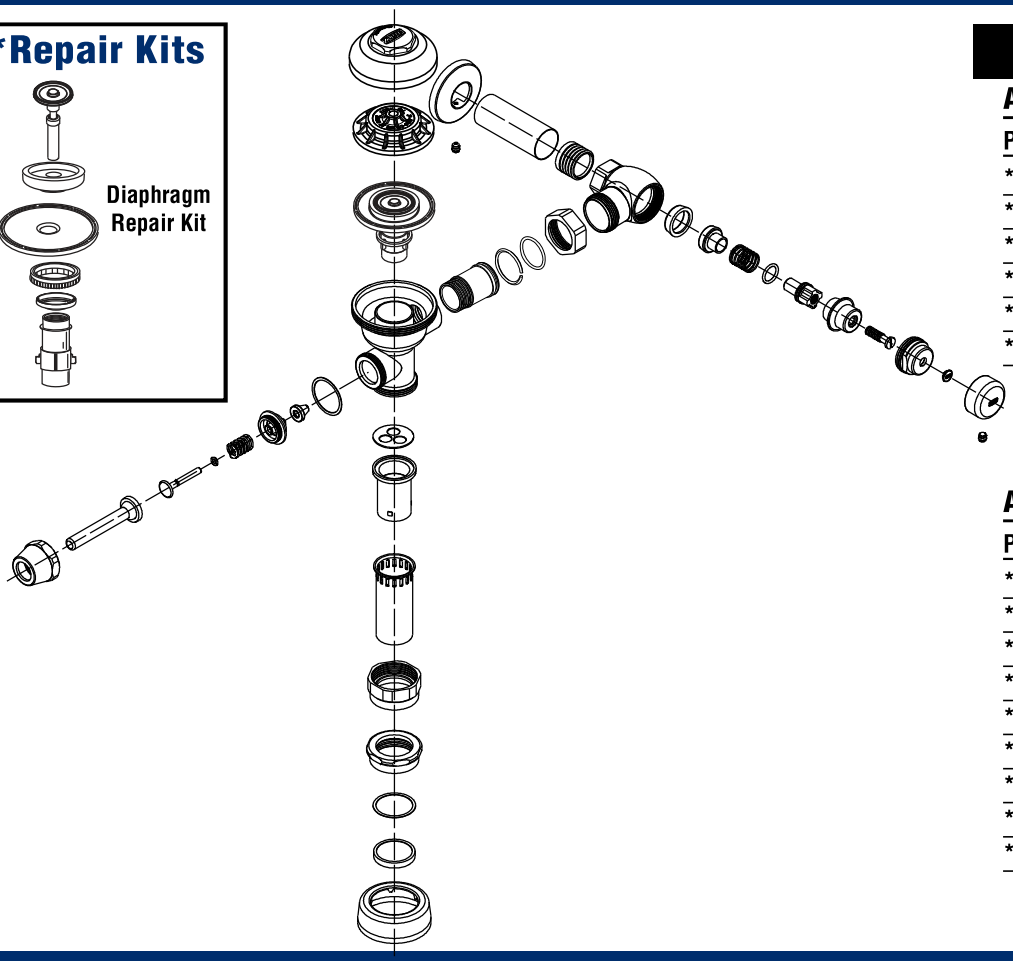

INTERNAL PARTS KITS

Aquaflush® Kits

Part #	Description
*P6000-ECR-FF	AF 4.5 Repair Kit
*P6000-EUR-WS	AF 1.5 Repair Kit
*P6000-ECR-WS	AF 3.5 Repair Kit
*P6000-ECR-WS1	AF 1.6 Repair Kit
*P6000-EUR-WS1	AF 1.0 Repair Kit
**P6000-ECR-WS-RK	AF 3.5 Rebuild Kit

AquaVantage® Kits

Part #	Description
*P6000-EUA-WS	AV 1.5 Repair Kit
*P6000-ECA-WS	AV 3.5 Repair Kit
*P6000-ECA-WS1	AV 1.6 Repair Kit
*P6000-EUA-WS1	AV 1.0 Repair Kit
*P6000-ECA-HET	AV 1.28 Repair Kit
**P6000-ECA-WS1-RK	AV 1.6 Rebuild Kit
**P6000-ECA-WS-RK	AV 3.5 Rebuild Kit
**P6000-EUA-WS1-RK	AV 1.0 Rebuild Kit
**P6000-EUA-WS-RK	AV 1.5 Rebuild Kit

NEOPERL®
flow, stop and go®

PCA® Perlator® BAA

Laminar Stream - 0.5 gpm - 1.8 gpm max

Pressure Compensating **Regular Size**

Features and Benefits

- Watercolours® design: Color coding to identify flow rate and stream pattern.
- Provides a splash-free, crystal clear (non-aerated) stream.
- Pressure compensating for constant flow from 20 to 80 psi.
- Recommended for use in healthcare facilities to prevent mixing air and water.
- Integrated anti-liming honeycomb replaces conventional wire mesh screens prone to lime build up.
- Laser marked housings with statutory marks.

Certifications

ANSI/NSF®-61-372 (all pending except 1.5 gpm)
ASME A112.18.1M and CSA B125 (pending)
Meets CALGreen requirements
WaterSense (1.0, 1.2, & 1.5 gpm pending)
Meets BAA requirements
Complies with CEC Amendment to CCR Title 20, section 1605. (1.2 &1.8 gpm)

MEETS BUY AMERICAN ACT

WaterSense Meets EPA Criteria Certified by NSF International

Thread & Part Number

Part #	Designation	Thread Size
41 014	0.5 gpm Vandal proof regular female	55/64"-27
41 020	0.5 gpm Dual thread	15/16"-27 x 55/64"-27
40 514	1.0 gpm Vandal proof regular female	55/64"-27
40 520	1.0 gpm Dual thread	15/16"-27 x 55/64"-27
40 914	1.2 gpm Vandal proof regular female	55/64"-27
40 920	1.2 gpm Dual thread	15/16"-27 x 55/64"-27
40 614	1.5 gpm Vandal proof regular female	55/64"-27
40 620	1.5 gpm Dual thread	15/16"-27 x 55/64"-27
41 214	1.8 gpm Vandal proof regular female	55/64"-27
41 220	1.8 gpm Dual thread	15/16"-27 x 55/64"-27

Color Code

Dome	Flow Regulator	Basket	Flow Rate
Natural	Lime Green	Light Gray	0.5
Natural	Blue	Light Gray	1.0
Natural	Pink	Light Gray	1.2
Clear	Green	Light Gray	1.5
Clear	Light Blue	Light Gray	1.8

Flow Rate Curve

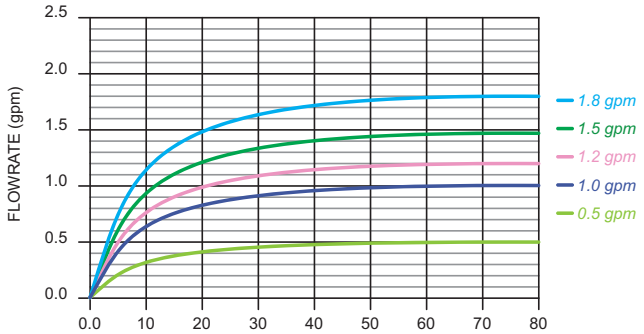

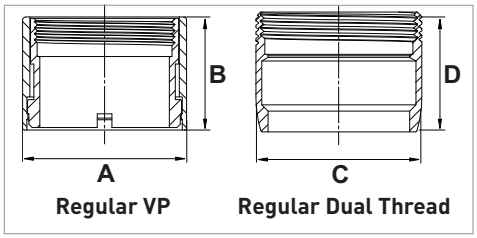

Dimensions

No	mm	In
A	25.50	1.004
B	17.60	.693
C	23.50	.925
D	16.99	.699

For Flow Rate Identification

Technical Data

Materials:	Body	Acetal
	O-ring	EPDM
	Washer	EPDM
	Housing	Chrome plated brass

Continuous	Short-term (5 minutes max.) Per ASME A112.18.1 testing requirements.
max. 50 °C – max. 120 °F; 80 psi max. – 5.5 bar max.	max. 70 °C – max. 160 °F; 125 psi max. – 8.5 bar max.

NEOPERL, Inc., Waterbury, CT • Tel: 203-756-8437 • Fax: 203-574-2107 • www.neoperl.com

NEOPERL®
flow, stop and go®

PCA® Spray BAA

Multi-Laminar Stream - 0.35 gpm - 1.0 gpm max

Pressure Compensating **Regular Size**

Features and Benefits

- Watercolours® design: Color coding to identify flow rate and stream pattern.
- Provides a non-splashing, non-aerated spray.
- Pressure compensating for constant flow from 20 to 80 psi.
- Recommended for use in healthcare facilities to prevent mixing air and water.
- Anti-clogging dome screen filters seditment and particles.
- Laser marked housings with statutory marks.

Certifications

ANSI/NSF®-61-372 (0.35 & 0.5 gpm pending)
ASME A112.18.1M and CSA B125 (0.35 & 0.5 gpm pending)
Meets CALGreen requirements
WaterSense (1.0 gpm)
Meets BAA requirements

MEETS BUY AMERICAN ACT

WaterSense Meets EPA Criteria Certified by NSF International

Thread & Part Number

Part #	Designation	Thread Size
40 714	0.35 gpm Vandal proof regular female	55/64"-27
40 720	0.35 gpm Dual thread	15/16"-27 x 55/64"-27
40 114	0.5 gpm Vandal proof regular female	55/64"-27
40 120	0.5 gpm Dual thread	15/16"-27 x 55/64"-27
40 214	1.0 gpm Vandal proof regular female	55/64"-27
40 220	1.0 gpm Dual thread	15/16"-27 x 55/64"-27

Color Code

Dome	Flow Regulator	Basket	Flow Rate
Natural	Brown	Dark Gray	0.35
Natural	Lime Green	Dark Gray	0.5
Natural	Blue	Dark Gray	1.0

Flow Rate Curve

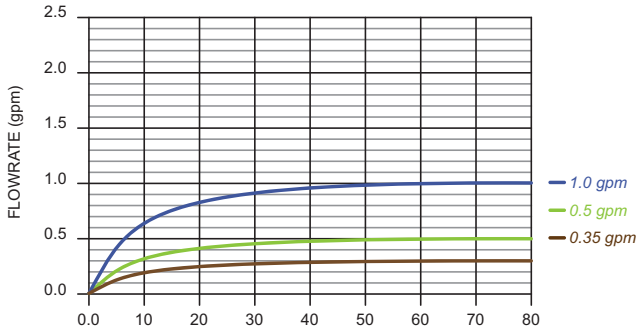

VP Female

Dual Thread

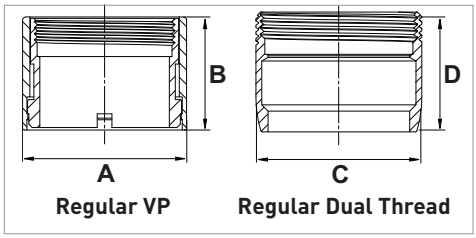

Dimensions

No	mm	In
A	25.50	1.004
B	17.60	.693
C	23.50	.925
D	16.99	.699

For Flow Rate Identification

0.35 gpm

0.5 gpm

1.0 gpm

Technical Data

Materials:	Body	Acetal
	O-ring	EPDM
	Washer	EPDM
	Housing	Chrome plated brass

Continuous

Short-term (5 minutes max.)
Per ASME A112.18.1 testing requirements.

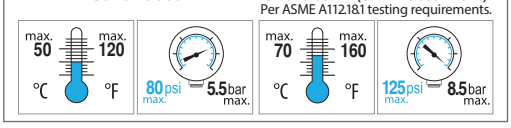

NEOPERL, Inc., Waterbury, CT • Tel: 203-756-8437 • Fax: 203-574-2107 • www.neoperl.com

April 2018 - Information subject to change without notice.

HighSierra SHOWERHEADS™

Conserving water at the source.

FITTING NO.
FCS-100 Showerhead
SUBMITTED MODEL NO.

JOB NAME	ITEM NO.

SUBMITTED AS SHOWN	
SUBMITTED AS NOTED	
SEE ATTACHED FOR SUBMITTED MODIFICATION	

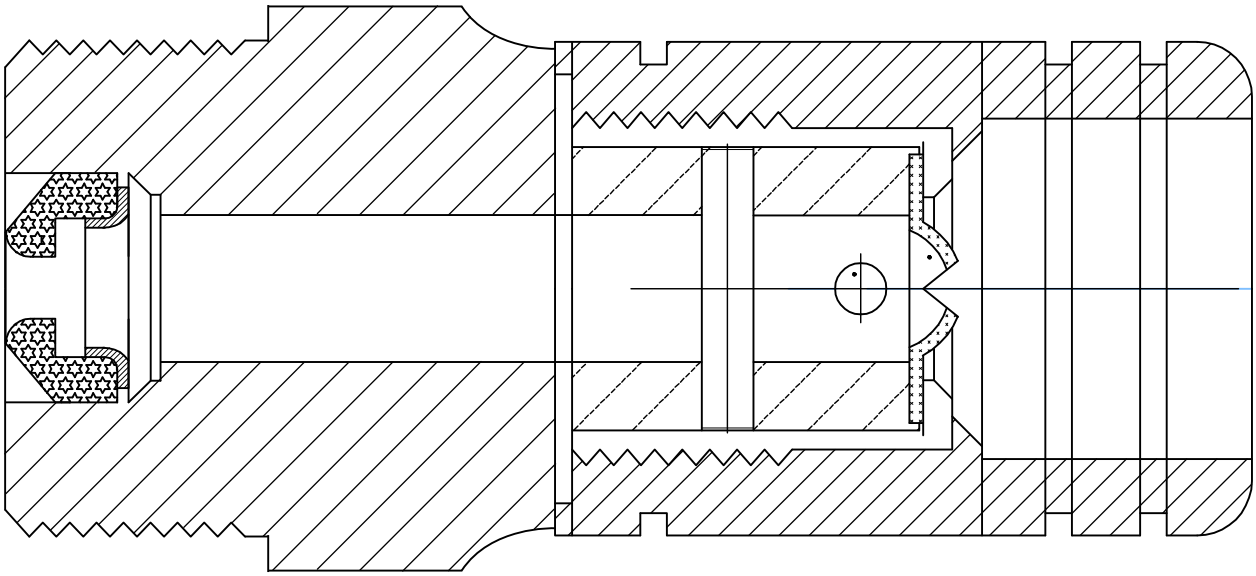

DIMENSIONS IN INCHES

TECHNICAL DATA	SPECIFICATION MANUAL

Wax Free Toilet Seal

The quick, clean and easy way to install toilets.

Fernco's Wax Free Toilet Seal is the only toilet seal that allows you to ***"feel the seal."*** As you lower the toilet onto the flange, you can feel the unique sealing ribs compress and seal against the inside walls of the drain pipe. No mess and no guess—just the confidence in a reliable seal. *After all, it's made by Fernco.*

Fernco Inc.

Environmental Commitment

United States
PH: 810-503-9000
FX: 810-503-1015

www.fernco.com

Canada
PH: 519-332-6711
FX: 519-332-8610

ELEMENT® Hot and Cold Model Electronic Manifold Lavatory Valve

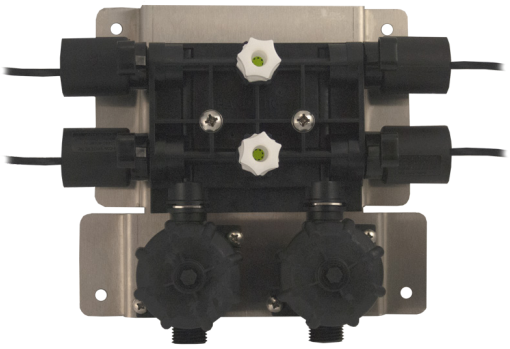

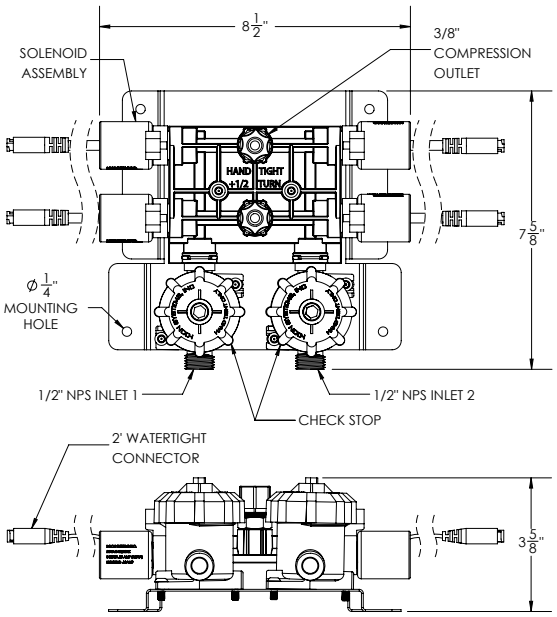

Part No. 102824

Description

Lavatory manifold valve for use with hot and cold water. Up to four lavatories can be supplied by one unit. Includes new pressure compensating 0.5 GPM flow regulators as standard.

Number of hot and cold lavatories (choose one)

- ☐ One lavatory
- ☐ Two lavatories
- ☐ Four lavatories

Solenoid Power (choose one)

- ☐ 24 Volts AC
- ☐ 9 Volts DC (Battery Operated)

Specifications

- New pressure compensating 0.5 GPM flow regulators as standard
- New check stop retaining clips for added support and reliability
- Expandable valve solution allowing for one (1) hot and cold water supply for up to four (4) lavatories
- No metering diaphragms to fail and clog
- Engineered non-metallic polymer valve body for advanced corrosion resistance
- Ability to activate using manual by-pass handle
- All solenoids are interchangeable with other I-CON valves reducing spare parts
- Positive valve shut-off after pressure loss eliminating continual running of valve
- Maximum water temperature of 120 degrees F and maximum pressure of 100 PSI
- 1/2" NPT supply connections and 3/8" OD tubing outlet

Accessories

For additional accessories, see the Accessories Section of the I-CON catalog or contact our Customer Service Team for details.

MADE IN USA · LEED POINTS 7 PTS UP TO · U.S. GREEN BUILDING COUNCIL MEMBER

⚠ **WARNING:** Cancer and Reproductive Harm - www.P65Warnings.ca.gov

This space is for Architect/Engineer approval

The information contained in this document is subject to change without notice.

I-CON Systems, Inc. • 3100 Camp Road, Oviedo, FL 32765 • Toll Free (800) 240-3578 • www.i-con.com

©2023 I-CON Systems, Inc. One or more products contained herein are protected by U.S. Patent with other undergoing the patent process www.i-con.com/patents.

Pre-Tempered Model
Electronic Manifold Shower Valve

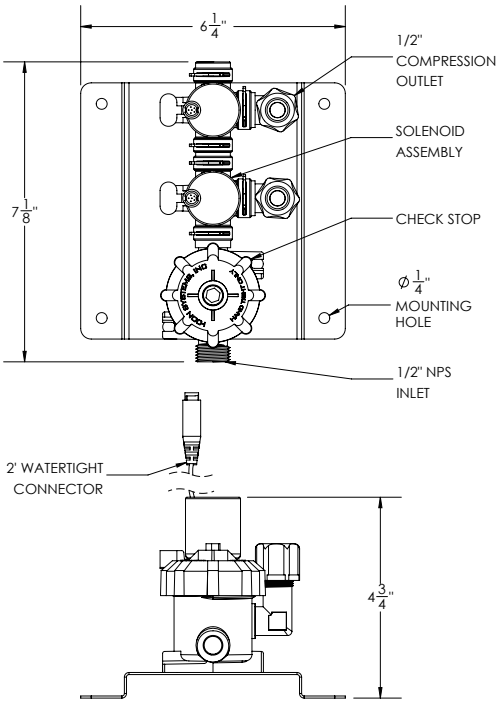

Part No. 100438

► Description

Shower manifold valve for use with pre-tempered water. Up to three pre-tempered showers can be supplied by one unit.

► Number of pre-tempered showers (choose one)

- ☐ One shower
- ☐ Two showers
- ☐ Three showers

► Solenoid Power (choose one)

- ☐ 24 Volts AC (High Flow)

► Accessories

For additional accessories, see the Accessories Section of the I-CON catalog or contact our Customer Service Team for details.

Specifications

- Expandable valve solution allowing for one (1) pre-temperd water supply for up to three (3) shower valves
- No metering diaphragms to fail and clog
- Engineered non-metallic valve body made from high strength glass filled polymer for advanced corrosion resistance
- Ability to activate using manual by-pass handle
- Advanced design allows for 1.5 GPM shower saving water over 2 GPM shower units
- All solenoid are interchangeable with other I-CON valves reducing spare parts
- Positive valve shut-off after pressure loss eliminating continual running
- Maximum water temperature of 120 degrees F and maximum pressure of 100 PSI
- 1/2” IPS compatible with 1/2” NPT

⚠ **WARNING:** Cancer and Reproductive Harm - www.P65Warnings.ca.gov

This space is for Architect/Engineer approval

The information contained in this document is subject to change without notice.

©2022 I-CON Systems, Inc. One or more products contained herein are protected by U.S. Patent with other undergoing the patent process www.i-con.com/patents.

I-CON ENVISAGE®
Water Management Console

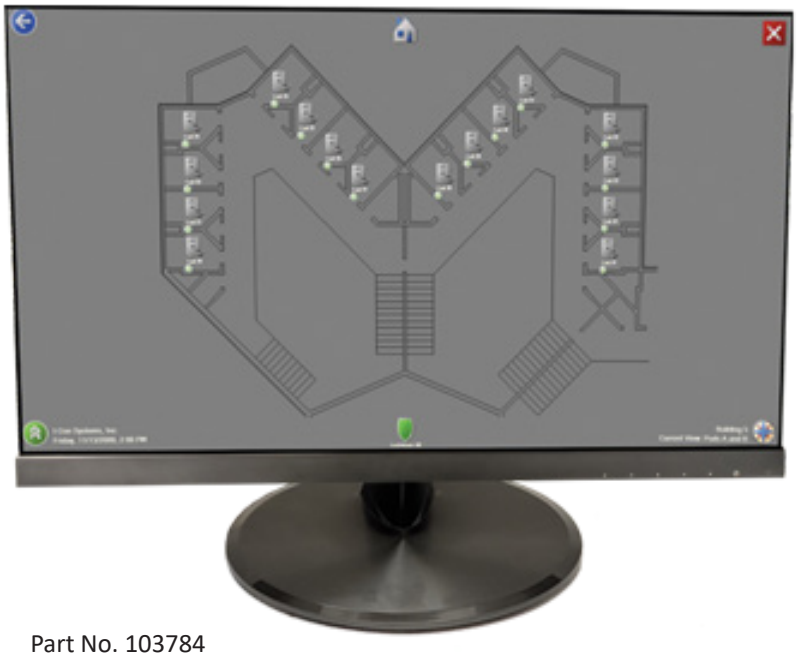

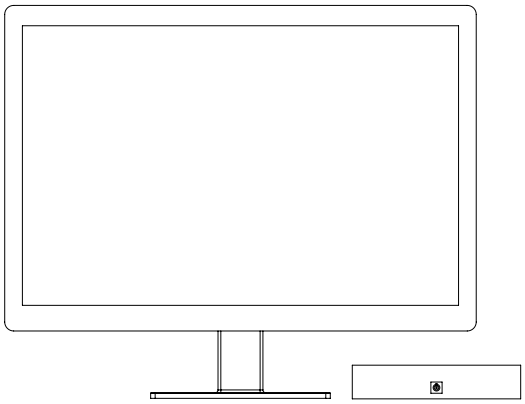

Note: Computer & Monitor May Vary.

Part No. 103784

Important: It is highly suggested to properly protect your equipment. Please consult a certified electrician for recommendations.

► Description

I-CON ENVISAGE® Network Management Console for facility plumbing management. An ENVISAGE® software license is required (NTC-SOFT Series).

► Features

- Touch screen capable
- Windows 10 based
- Automatically launches into ENVISAGE® software
- Prohibits access to Windows and other programs
- Includes wired keyboard and mouse

► Options

- ☐ Enable and pre-configure Microsoft® Windows® Remote Desktop
- ☐ Wireless Network Interface
- ☐ Wired Network Interface

► Accessories

For additional accessories, see the Accessories Section of the I-CON catalog or contact our Customer Service Team for details.

Recommended Specification

The I-CON ENVISAGE® Network Management Console comes pre-configured from the factory with simplicity and security in mind. I-CON Envisage NMC is plug and play with I-CON communicating series controllers. Envisage NMC is a Windows 10 based computer that comes pre-configured to securely run Envisage and only Envisage. The computer will automatically launch into the Envisage software and attempts to leave Envisage to access Windows or other programs will require administrative passwords."

*To facilitate remote access to an Envisage powered computer, Microsoft® Windows® Remote Desktop functionality can be enabled and pre-configured prior to shipment. I-CON uses static IP addresses to allow remote access. A desired IP address can be provided, or I-CON will select one. Configuration of the required network infrastructure, as well as ongoing support and maintenance of the Remote Desktop functionality is the customer's responsibility and is not supported by I-CON.

⚠ **WARNING:** Cancer and Reproductive Harm - www.P65Warnings.ca.gov

This space is for Architect/Engineer approval

The information contained in this document is subject to change without notice.

I-CON Systems, Inc. • 3100 Camp Road, Oviedo, FL 32765 • Toll Free (800) 240-3578 • www.i-con.com

©2023 I-CON Systems, Inc.

One or more products contained herein are protected by U.S. Patent with other undergoing the patent process www.i-con.com/patents.

Wireless Communication Daughterboard

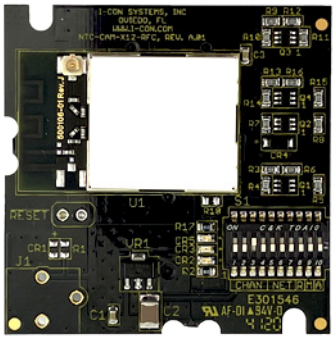

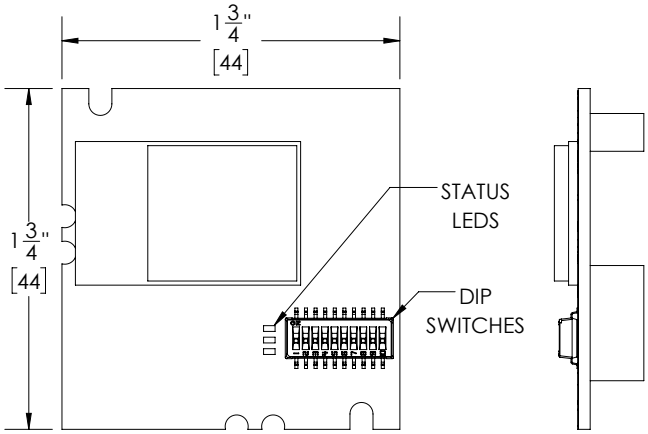

Part No. 100417

NOTE: USB Wireless Network Interface required and sold separately.

► Description

The wireless communication daughterboard is designed for use with I-CON's NEXUS® Model 4 I/O or 8 I/O AC Controllers. Multiple controllers can be wirelessly networked and linked to I-CON's ENVISAGE® Water Management Console for maximum control of plumbing fixtures over a secure dedicated wireless network.

► System Requirements

System requirements may vary depending on facility design and construction. Contact customer service for additional details.

► Accessories

See Accessories Section of the I-CON catalog or contact our Customer Service Team for details.

Specifications

- Plugs easily into any NEXUS® 4-I/O or 8-I/O AC controller without the use of tools
- LED indication of communication status
- ENVISAGE® networks can be formed with a combination of wired and wireless technologies
- Operates in the 2.4GHz frequency band with the following features:
  - Secure, government strength AES encryption
  - Automatic network formation
  - Multiple networks can be created without interfering with each other
  - Will not interfere with other wireless systems such as WiFi or 2-way radios

WARNING: Cancer and Reproductive Harm - www.P65Warnings.ca.gov

This space is for Architect/Engineer approval

The information contained in this document is subject to change without notice.

©2022 I-CON Systems, Inc. One or more products contained herein are protected by U.S. Patent with other undergoing the patent process www.i-con.com/patents.

Communication Daughterboard

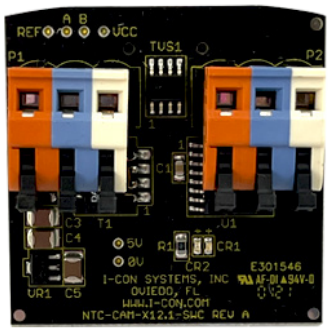

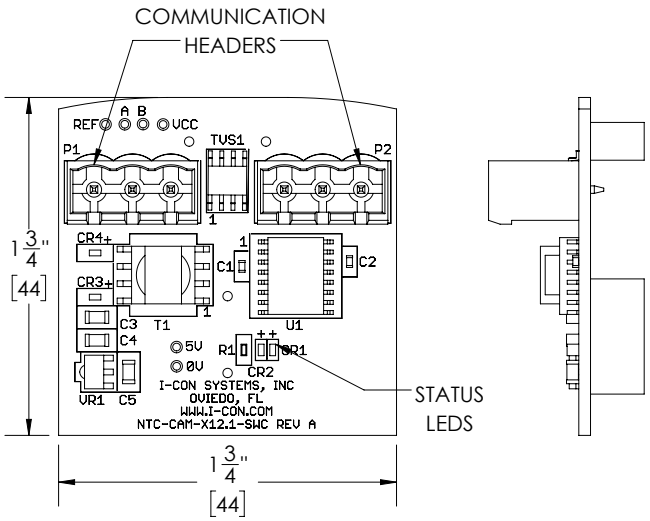

Part No. 100971

Description

The communicating daughterboard is designed for use with I-CON's NEXUS® Model 4 I/O or 8 I/O AC Controllers. Multiple controllers can be networked and linked to I-CON's ENVISAGE® Water Management Console for maximum control of plumbing fixtures over a secure wired network.

System Requirements

System requirements may vary depending on facility design and construction. Contact customer service for additional details.

Specifications

- Plugs easily into any NEXUS® 4-I/O or 8-I/O AC controller without the use of tools
- LED indication of communication status
- ENVISAGE® networks can be formed with a combination of wired and wireless technologies
- Secure, encrypted data transmission

Accessories

See Accessories Section of the I-CON catalog or contact our Customer Service Team for details.

WARNING: Cancer and Reproductive Harm - www.P65Warnings.ca.gov

This space is for Architect/Engineer approval

The information contained in this document is subject to change without notice.

©2022 I-CON Systems, Inc. One or more products contained herein are protected by U.S. Patent with other undergoing the patent process www.i-con.com/patents.

NEXUS® Model - 8 I/O AC Controller

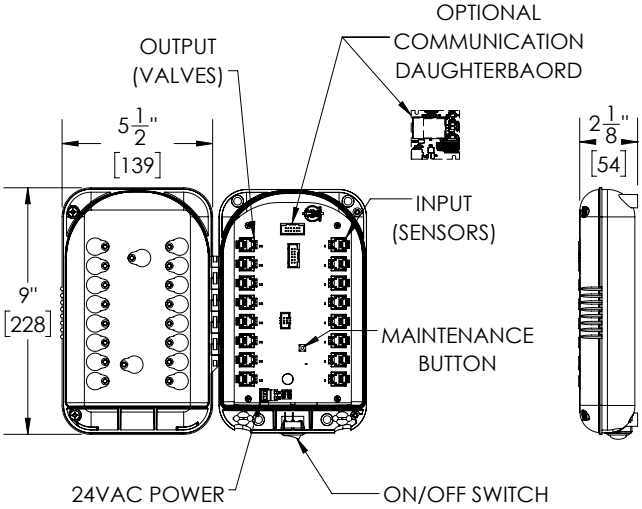

Part No. 100191

* **Note:** Communication Daughter Board is required for communicating controllers only.

► Description

Standalone or Communicating Eight Input/Eight Output Controller used to control up to Eight buttons and valves. Multiple controllers can be networked and linked into an I-CON ENVISAGE® powered computer system.

► 8 I/O Program Type (choose one)

	Port # 12345678
☐ Two Combies and Two Showers	(HCFHCFSS)
☐ Two Combies and Two Flush	(HCFHCFFF)
☐ Two Combies and Cold, Hot	(HCFHCFCH)
☐ Two Combies and Flush, Hot	(HCFHCFFH)
☐ Eight Showers	(SSSSSSSS)
☐ Eight Waterclosets	(FFFFFFFF)
☐ Four Lavatories	(HCHCHCHC)
☐ Special Order - Please Contact Factory	_____

Specifications

- New Water Resistant Enclosure
- Designed for penal use and other vandal prone areas to conserve potable water consumption
- 24 VAC power with low power consumption
- Electrical telephone plug type connectors for sensor and solenoid
- Ability to be remotely located up to three hundred (300) feet from the associated fixtures
- UL Listed (E308296) and independently tested
- Adjustable program times without dip switches
- Power switch on the exterior of the housing
- Amber power LED illuminates with power
- Green LEDs illuminate at each port to show the port is active
- Red LEDs indicate block times are in effect
- Power surge protection and voltage spike protection
- Nominal Current Draw: 90mA
- Current Draw per active port: 180 mA

► Accessories

See Accessories Section of the I-CON catalog or contact our Customer Service Team for details.

⚠ **WARNING:** Cancer and Reproductive Harm - www.P65Warnings.ca.gov

This space is for Architect/Engineer approval

The information contained in this document is subject to change without notice.

I-CON Systems, Inc. • 3100 Camp Road, Oviedo, FL 32765 • Toll Free (800) 240-3578 • Fax (407) 365-7944 • www.i-con.com

©2022 I-CON Systems, Inc. One or more products contained herein are protected by U.S. Patent with other undergoing the patent process www.i-con.com/patents.

NEXUS® Model - 4 I/O AC Controller

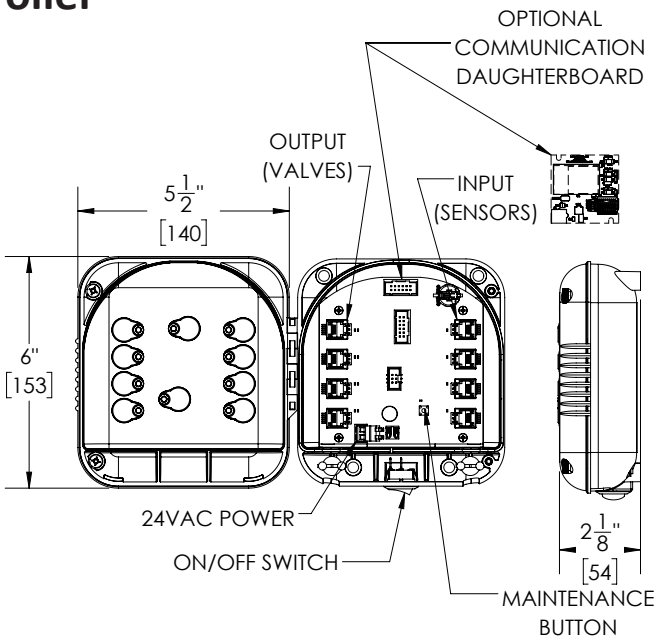

Part No. 100192

* **Note:** Communication Daughter Board is required for communicating controllers only.

► Description

Standalone or Communicating Four Input/Four Output Controller used to control up to Four buttons and valves. Multiple controllers can be networked and linked into an I-CON ENVISAGE® powered computer system. Adjust run-times and lockouts with a NEXUS® Time Adjuster or any ENVISAGE® product.

► 4 I/O Program Type (choose one)

	Port # 1234
☐ One Combie and One Shower	(HCFS)
☐ One Combie and Flush	(HCFF)
☐ Two Cold and Two Flush	(CCFF)
☐ Four Showers	(SSSS)
☐ Four Waterclosets	(FFFF)
☐ Two Lavatories	(HCHC)
☐ Special Order - Please Contact Factory	_____

Specifications

- New Water Resistant Enclosure
- Designed for penal use and other vandal prone areas to conserve potable water consumption
- 24 VAC power with low power consumption
- Electrical telephone plug type connectors for sensor and solenoid
- Ability to be remotely located up to three hundred (300) feet from the associated fixtures
- UL Listed (E308296) and independently tested
- Adjustable program times without dip switches
- Power switch on the exterior of the housing
- Amber power LED illuminates with power
- Green LEDs illuminate at each port to show the port is active
- Red LEDs indicate block times are in effect
- Power surge protection and voltage spike protection
- Nominal Current Draw: 90mA
- Current Draw per active port: 180 mA

► Accessories

See Accessories Section of the I-CON catalog or contact our Customer Service Team for details.

MADE IN USA · LEED POINTS 7 PTS UP TO · U.S. GREEN BUILDING COUNCIL MEMBER

⚠ **WARNING:** Cancer and Reproductive Harm - www.P65Warnings.ca.gov

This space is for Architect/Engineer approval

The information contained in this document is subject to change without notice.

I-CON Systems, Inc. • 3100 Camp Road, Oviedo, FL 32765 • Toll Free (800) 240-3578 • Fax (407) 365-7944 • www.i-con.com

©2022 I-CON Systems, Inc. One or more products contained herein are protected by U.S. Patent with other undergoing the patent process www.i-con.com/patents.

NEXUS® Model 1 I/O AC Standalone Controller

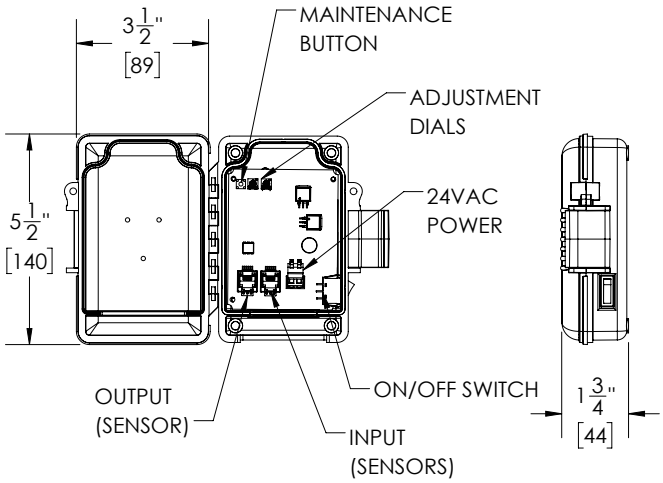

Part No. 102605

► Description

24VAC standalone electronic controller used to control a single pre-tempered shower, watercloset, or lavatory valve.

► Program Type (choose one)

	Port # 1
☐ One Cold	(C)
☐ One Flush	(F)
☐ One Hot	(H)
☐ One Shower	(S)
☐ Special Order - Please Contact Factory	_____

► Timing Adjustment Option (choose one)

☐ Standard	
☐ Custom Lockout Times	(Waterclosets)
☐ Custom Run Times	(Showers)
☐ Custom Lockout Times and Runtimes	(WC & Shower)

► Accessories

See Accessories Section of the I-CON catalog or contact our Customer Service Team for details.

Specifications

- Specifically designed for penal use and other vandal prone areas to conserve potable water consumption
- 24 VAC power with low power consumption
- Electrical telephone plug type connectors for sensor and solenoid
- Ability to be remotely located up to three hundred (300) feet from the associated fixtures
- UL Listed (E308296) and independently tested
- Adjustable program times without dip switches
- Amber power LED illuminates with power
- Green LEDs illuminate at each port to show the port is active
- Red LEDs indicate block times are in effect
- Power surge protection and voltage spike protection

⚠ **WARNING:** Cancer and Reproductive Harm - www.P65Warnings.ca.gov

This space is for Architect/Engineer approval

The information contained in this document is subject to change without notice.

©2022 I-CON Systems, Inc. One or more products contained herein are protected by U.S. Patent with other undergoing the patent process www.i-con.com/patents.

MOMENTUM® Model
Electronic Retrofit Flush Valve

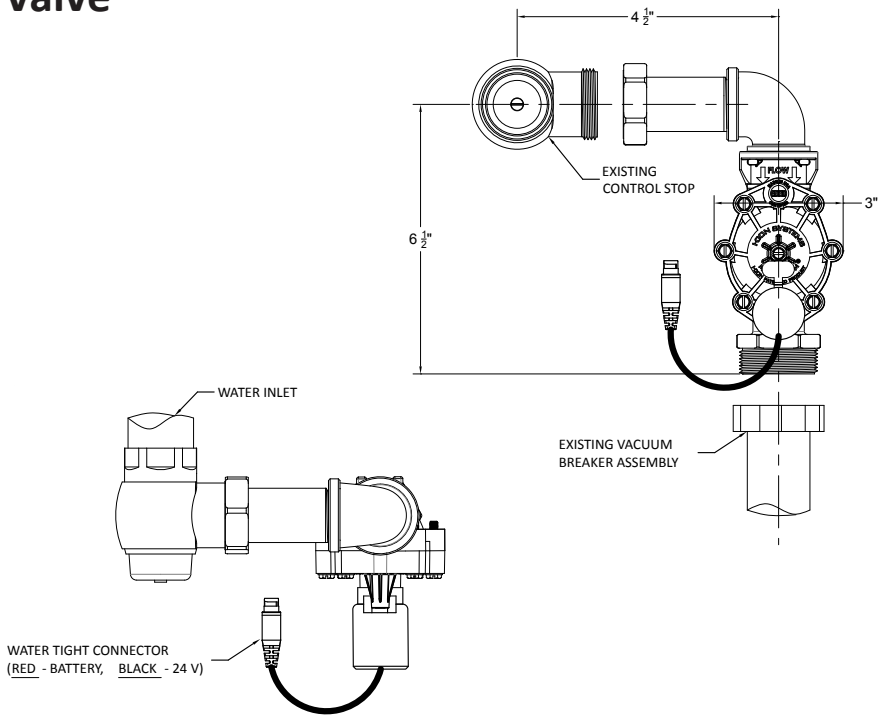

Part No. 100290

► Description

Concealed Water Closet and Urinal Flush Valve used in retrofit applications to reduce consumption and abuse.

► High Velocity Flow Rates

- 1.6 gpf on 3.5 gallon WC fixture - Low Consumption (LC)
- .9 gpf on 1.6 gallon WC fixture - Ultra High Efficient (UHE)
- .5 gpf on 1.0 gallon Urinal fixture - Low Consumption (LC)
- .125 gpf (1 pint) on Urinal fixture - Ultra High Efficient (UHE)

► Solenoid Power (choose one)

☐ 24 Volts AC
☐ 9 Volts DC (Battery Operated)

► Accessories

For additional accessories, see the Accessories Section of the I-CON catalog or contact our Customer Service Team for details.

Specifications

- Third Party Tested and approved for flushing 1.6 gallons on a 3.5 gallon fixture and .9 gallons on a 1.6 gallon fixture
- No metering diaphragms to fail and clog
- Engineered non-metallic valve body made from high strength glass filled polymer for advanced corrosion resistance
- Ability to flush using manual by-pass handle
- Straight through flow path to maximum flush velocity and provide superior force of flush
- All solenoids are interchangeable with other I-CON valves reducing spare parts
- Positive valve shut-off after pressure loss eliminating continual flush of typical flushometers
- Easily retrofits to existing inlet and outlet water piping hardware
- Flush activation adjustment to overcome calcium build-up blocking older flush jets

⚠ **WARNING:** Cancer and Reproductive Harm - www.P65Warnings.ca.gov

This space is for Architect/Engineer approval

The information contained in this document is subject to change without notice.

I-CON Systems, Inc. • 3100 Camp Road, Oviedo, FL 32765 • Toll Free (800) 240-3578 • www.i-con.com

©2022 I-CON Systems, Inc. One or more products contained herein are protected by U.S. Patent with other undergoing the patent process www.i-con.com/patents.

TruTouch® Model
Force Activated LED Touch Sensor

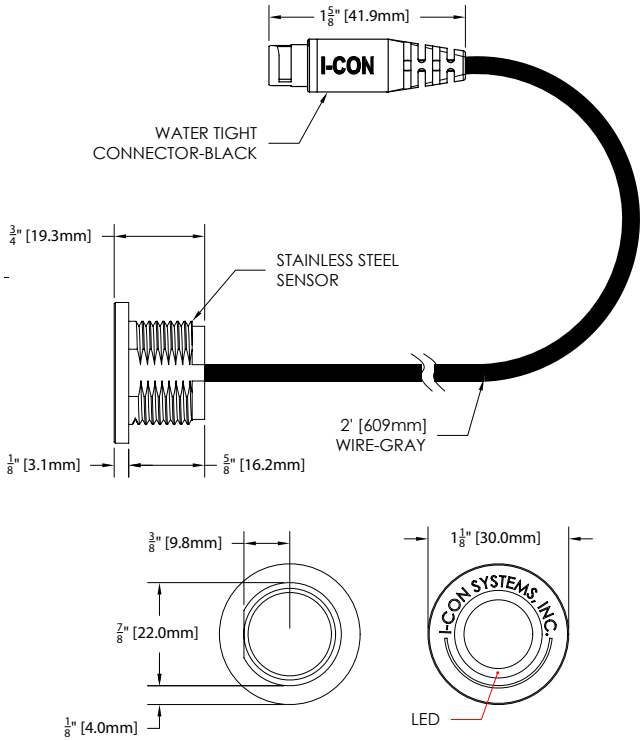

Part No. 100146

► Description

Fully Electronic Force Activated LED Sensor with no moving parts. Sensor includes a two foot lead with watertight connector. Extension with RJ connector is required and is available in a variety of lengths.

LED illumination indicators:

- Solid* Green indicates port is in run mode
- Rapid flashing Red indicates Anti-Water Hammer feature
- Solid* Red indicates port is in lockout mode
- Slow flashing Red indicates maintenance mode

* *Flashing for battery operated controllers*

► Cable Length (must choose one)

- ☐ 6' Lead Cable w/RJ Connector - WR-SEN-WT-6C-006
- ☐ 15' Lead Cable w/RJ Connector - WR-SEN-WT-6C-015
- ☐ 25' Lead Cable w/RJ Connector - WR-SEN-WT-6C-025
- ☐ 35' Lead Cable w/RJ Connector - WR-SEN-WT-6C-035
- ☐ 60' Lead Cable w/RJ Connector - WR-SEN-WT-6C-060

► Accessories

See Accessories Section of the I-CON catalog or contact our Customer Service Team for details.

Specifications

- Specifically designed for penal use
- Rugged, polished stainless steel housing with no internal moving parts makes the unit virtually vandal-proof
- Proven reliability with testing of over 1 million activations
- Unique design allows activation by finger pressure without compromising its sealing integrity
- Proprietary 5V DC design allowing for no power consumption until touched by operator.
- Ability to be remotely located up to three hundred (300) feet from the associated controller
- Telephone type connectors for quick and easy connection to controller
- Meets all ADA requirements
- IP 68 Protection
- Operating temperature range from -40F to 257F

⚠ **WARNING:** Cancer and Reproductive Harm - www.P65Warnings.ca.gov

This space is for Architect/Engineer approval

The information contained in this document is subject to change without notice.

I-CON Systems, Inc. • 3100 Camp Road, Oviedo, FL 32765 • Toll Free (800) 240-3578 • www.i-con.com

©2022 I-CON Systems, Inc. One or more products contained herein are protected by U.S. Patent with other undergoing the patent process www.i-con.com/patents.

TruTOUCH® Model
Force Activated Touch Sensor

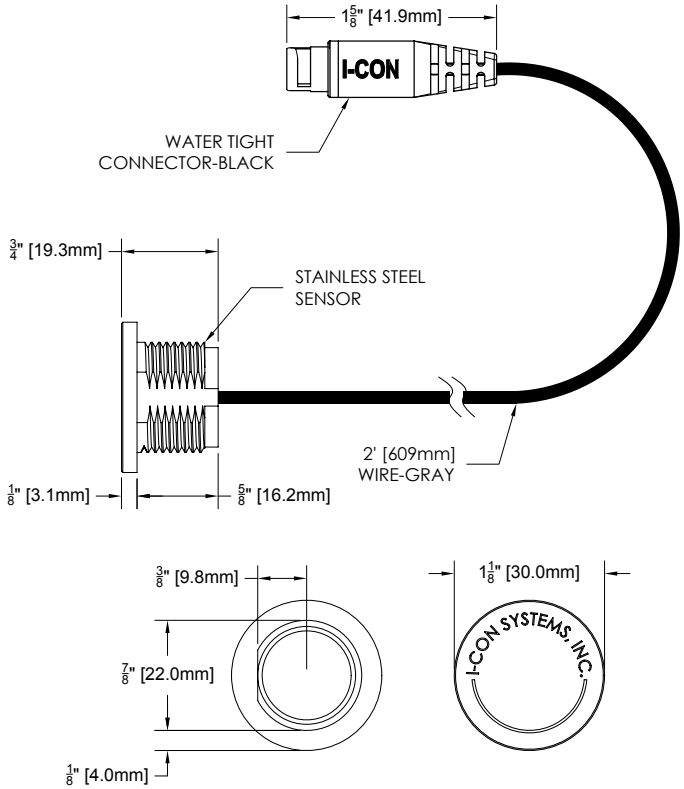

Part No. 100215

► Description

Fully Electronic Force Activated Sensor with no moving parts. Sensor includes a two foot lead with watertight connector. Lead cable with RJ connector is **required for operation and sold separately.** Choose from a variety of lengths below.

► Lead Cable Length (must choose one)

- ☐ 6' Lead Cable w/RJ Connector - WR-SEN-WT-4C-006
- ☐ 15' Lead Cable w/RJ Connector - WR-SEN-WT-4C-015
- ☐ 25' Lead Cable w/RJ Connector - WR-SEN-WT-4C-025
- ☐ 35' Lead Cable w/RJ Connector - WR-SEN-WT-4C-035
- ☐ 60' Lead Cable w/RJ Connector - WR-SEN-WT-4C-060

► Accessories

See Accessories Section of the I-CON catalog or contact our Customer Service Team for details.

Specifications

- Specifically designed for penal use
- Rugged, polished stainless steel housing with no internal moving parts makes the unit virtually vandal-proof
- Proven reliability with testing of over 1 million activations
- Unique design allows activation by finger pressure without compromising its sealing integrity
- Proprietary 5V DC design allowing for no power consumption until touched by operator.
- Ability to be remotely located up to three hundred (300) feet from the associated controller
- Telephone type connectors for quick and easy connection to controller
- Meets all ADA requirements
- IP 68 Protection
- Operating temperature range from -40F to 257F

⚠ **WARNING:** Cancer and Reproductive Harm - www.P65Warnings.ca.gov

This space is for Architect/Engineer approval

The information contained in this document is subject to change without notice.

I-CON Systems, Inc. • 3100 Camp Road, Oviedo, FL 32765 • Toll Free (800) 240-3578 • www.i-con.com

©2022 I-CON Systems, Inc. One or more products contained herein are protected by U.S. Patent with other undergoing the patent process www.i-con.com/patents.

High Back Pressure Vacuum Breaker Rebuild Kit

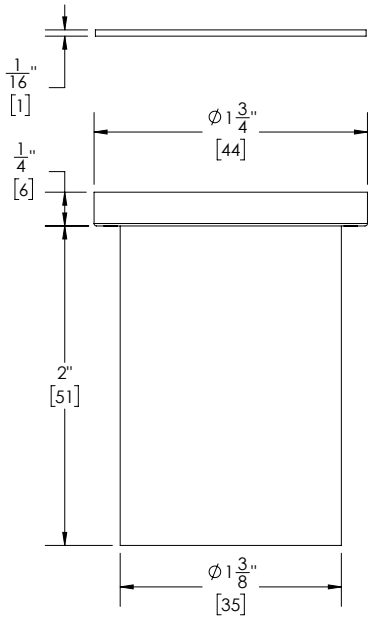

Part No. 103829

► Description

High Back Pressure Vacuum Breaker with Friction Washer

► Features

- Silicon construction for a long life
- Paper friction washer
- Designed for high back pressure systems

Recommended Specification

I-CON Vacuum Breaker Kit contains a silicone vacuum breaker and paper friction washer. The vacuum breaker is designed for high back pressure systems and made from silicon for durability.

WARNING: Cancer and Reproductive Harm - www.P65Warnings.ca.gov

This space is for Architect/Engineer approval

► Accessories

See Accessories Section of the I-CON catalog or contact our Customer Service Team for details.

The information contained in this document is subject to change without notice.

©2022 I-CON Systems, Inc. One or more products contained herein are protected by U.S. Patent with other undergoing the patent process www.i-con.com/patents.

data sheet

niagara4 supervisor

PRODUCT DEFINITION

The Niagara Supervisor is part of the portfolio of Java-based controller/server products, software applications and tools powered by the Niagara Framework®. It provides server-level functions for a network of JACE, Niagara Edge and other field devices. The Niagara Supervisor serves real-time graphical information to standard web-browser clients and performs essential functions such as analytics, centralized data logging/trending, archiving to external databases, alarming, dashboarding, system navigation, master scheduling, database management and integration with other enterprise software applications. Additionally, the Niagara Supervisor provides a comprehensive graphical engineering toolset for application development and configuration.

The Niagara Supervisor allows the networking of multiple Niagara-based JACE® and Niagara Edge™ controllers, along with other IP-based controllers and field devices. It enables the design, configuration and maintenance of a unified, real-time controls network.

key features

- Centralized system management
- Utilize tags to quickly navigate to buildings, systems and equipment when diagnosing operational problems or emergencies
- Compare data between buildings
- Export system data to external databases
- Integrate a Building Automation System (BAS) with other enterprise applications
- Integrate with other applications, such as work order management, analytics, etc.
- Single tool used to program JACE, Niagara Edge controllers and Supervisor
- Remotely back up JACE and Edge applications to Supervisor
- Batch provisioning of JACE and Edge firmware upgrades, security credentials, applications and commissioning options from Supervisor
- Robust built-in analytic capabilities supported by standard Niagara components and visualizations
- Includes Niagara Analytics, which features data source, functional and mathematical programming blocks that enable sophisticated analytic algorithms
- Compatibility with Niagara Enterprise Security access control and security application. Allows integration of BAS and access control to save energy and optimize operations
- Eligible for accreditation under the Federal Risk Management Framework (RMF)
- FIPS 140-2 Level 1 conformance available

powered by niagara framework®

SPECIFICATIONS

Features a HTML5 and Java-enabled user interface (UI), and includes a JavaScript data interface library (BajaScript)

Supports an unlimited number of users over the internet/intranet with a standard web browser (depending on the host PC resources)

Optional enterprise-level data archival using SQL, MySQL or Oracle databases, and HTTP/HTML/XML, CSV or text formats

"Audit Trail" of database changes, database storage and backup, global time functions, calendar, central scheduling, control and energy management routines

Sophisticated alarm processing and routing, including email alarm acknowledging

Access to alarms, logs, graphics, schedules and configuration data with a standard web browser

Niagara follows industry best practices for cyber security, with support for features such as strong, hashed passwords, TLS for secure communications and certificate management tools for authentication. A built-in Security Dashboard provides a comprehensive and actionable view of the security posture of your Niagara deployment

HTML-based help system that includes comprehensive online system documentation

Supports multiple Niagara-based stations connected to a local Ethernet network or the internet

Provides online/offline use of the Niagara Framework® Workbench graphical configuration tool and a comprehensive Java Object Library

Optional direct Ethernet-based driver support for most Open IP field bus protocols (see supported drivers document)

SOFTWARE & DRIVERS

Every Niagara Supervisor comes with a Niagara 4 software license, along with multiple open-protocol IP drivers that are compatible with standard control networks. If required, other drivers can be purchase separately. For an up-to-date list of supported drivers, visit the resource library on tridium.com.

SOFTWARE MAINTENANCE

Purchase of a software maintenance agreement (SMA) is required with initial Niagara Supervisor licensing. The initial SMA is for 18 months, with extended agreements of 3 years and 5 years available for discounted rates.

If a Software Maintenance Agreement is not in effect for any period, the price of maintenance for the next period for which it is purchased will be priced at a cost equal to the maintenance fee for the period(s) for which maintenance was not purchased, up to a maximum of 5 years, plus the maintenance fee for the next year.

For an up-to-date list of supported drivers, visit the resource library on tridium.com.

ORDERING INFORMATION

Part number	Description
SUP-0	No Niagara network – Devices only. 18mo SMA required
SUP-0-SMA-INIT	18mo initial SMA required (3YR or 5YR can be substituted)
SUP-1	1 Niagara network connection (18mo SMA req)
SUP-1-SMA-INIT	18mo initial SMA required (3YR or 5YR can be substituted)
SUP-2	2 Niagara network connections (18mo SMA req)
SUP-2-SMA-INIT	18mo initial SMA required (3YR or 5YR can be substituted)
SUP-3	3 Niagara network connections (18mo SMA req)
SUP-3-SMA-INIT	18mo initial SMA required (3YR or 5YR can be substituted)
SUP-10	10 Niagara network connections (18mo SMA req)
SUP-10-SMA-INIT	18mo initial SMA required (3YR or 5YR can be substituted)
SUP-100	100 Niagara network connections (18mo SMA req)
SUP-100-SMA-INIT	18mo initial SMA required (3YR or 5YR can be substituted)
SUP-UNL	Unlimited Niagara network connections (18mo SMA req)
SUP-UNL-SMA-INIT	18mo initial SMA required (3YR or 5YR can be substituted)
SUP-UP-1	Adds 1 additional Niagara connection to Supervisor
SUP-STATION-5UP	Adds 5 additional Niagara connections to Supervisor
SUP-UP-100	Upgrades small Supervisor to 100 Niagara connections
SUP-UP-UNL	Upgrades Supervisor 100 to unlimited Niagara connections
SUP-DEVICE-10	10 device upgrade (standard drivers included)
SUP-DEVICE-25	25 device upgrade (standard drivers included)
SUP-DEVICE-50	50 device upgrade (standard drivers included)
SUP-DEVICE-100	100 device upgrade (standard drivers included)
SUP-DEVICE-200	200 device upgrade (standard drivers included)
SUP-DEVICE-500	500 device upgrade (standard drivers included)
SUP-DEVICE-1000	1000 device upgrade (standard drivers included)
SP-S-FIPS	Provides FIPS 140-2 Level 1 conformance for 4.6 and later
SUP-AX	Enables Supervisor to run Niagara AX (v3.8)
SUP-[0-UNL]-SMA-[1,3,5]YR	Supervisor [0-UNL] Maintenance – [1,3,5] YR extensions

COMPATIBILITY

In any given Niagara system, the Niagara Supervisor must be running the highest version of any Niagara instance in the architecture.

When connecting to JACEs that are running older versions of Niagara, these compatibility guidelines apply:

- **Niagara AX:** Niagara 4 Supervisors can connect to JACEs running Niagara AX versions 3.8 and higher.
- **R2:** Niagara 4 Supervisors can connect to JACEs running R2 through the oBIX XML interface only.

PLATFORM REQUIREMENTS FOR NIAGARA SUPERVISOR

Niagara 4 Supervisors may run acceptably on lower-rated platforms, or may even require more powerful platforms, depending on the application, number of data points integrated, data poll rate, number of concurrent users, performance expectations, etc.

- **Processor:** Intel® Xeon® CPU E5-2640 x64 (or better), compatible with dual- and quad-core processors
- **Operating System:** Windows 10 (64 bit), Windows Server 2016, Windows Server 2019 (64 bit), Red Hat Enterprise Linux 7.7, 8.1 (64bit)
- **Mobile operating system:** iOS 12, iOS13, Android 8 Oreo, Android 9 Pie, Android 10.0
- **Browser:** Chrome, Firefox, Microsoft Edge
- **Mobile Browser:** Safari on iOS, Chrome on Android
- **Database:** MySQL 5.7, 8.0, 9.0; Oracle Express 11g; Oracle 12, 18, 19c; MSSQL 2012, 2016, 2017, 2019
- **Memory:** 6 GB minimum, 8 GB or more recommended for larger systems
- **Hard Drive:** 4 GB minimum, more recommended depending on archiving requirements
- **Display:** Video card and monitor capable of displaying 1024 x 768 pixel resolution, 1080p (1920 x 1080) minimum resolution recommended
- **Network Support:** Ethernet adapter (10/100 Mb with RJ-45 connector)
- **Connectivity:** Full-time high-speed ISP connection recommended for remote site access (i.e., T1, ADSL, cable modem) and IPv6 compliant

Platform requirements for older versions of Niagara Supervisors are included in the release notes for each particular version.

TRIDIUM

tridium.com

Locations and customer support, worldwide

Headquarters
North America
1 804 747 4771

Support
North America & Latin America
1 877 305 1745

Europe, Middle East & Africa
44 1403 740290

Asia Pacific
86 400 818 6088

© 2020 Tridium Inc. All rights reserved. All other trademarks and registered trademarks are properties of their respective owners.

Information and/or specifications published here are current as of the date of publication of this document. Tridium, Inc. reserves the right to change or modify specifications without prior notice. The latest product specifications can be found by contacting our corporate headquarters, Richmond, Virginia. Products or features contained herein may be covered by one or more U.S. or foreign patents. This document may be copied only as expressly authorized by Tridium in writing. It may not otherwise, in whole or in part, be copied, photocopied, reproduced, translated, or reduced to any electronic medium or machine-readable form.

2020-0005

Multi-Sense®
Model 231RS
Multi-Configurable, Wet-to-Wet Differential Pressure Transducer

Setra's Model 231RS is the industry's first multi-configurable, wet-to-wet differential pressure transducer utilizing remote sensors. This design reduces labor and material costs versus traditional copper piping installations. The 231RS has a robust, NEMA 4 enclosure with an LCD display and a hinged, captive cover allowing for easy access to switches in order to adjust range and output. An optional display is available that allows users to view high, low, and differential pressure readings on a simple rotating cycle.

Advantages of Remote Sensors

Remote sensors provide multiple advantages. By connecting the high and low side transducers at the point of measurement instead of running copper piping back to the transducer, the labor and material costs are cut by one-third.

All Inclusive Field Selectable Design

The 231RS has a multi-configurable design, providing the user with field selectable ranges and outputs as well as push button or remote zero. This design gives the user total flexibility to make changes on the job site.

Multiple Connector Options for Added Flexibility

The 231RS offers remote sensors that connect to the unit via armored jacket, cable or conduit fitting available in 10, 20, 30, 40 and 50 foot lengths. With the remote sensors, there is no need for a 3 or 5 valve manifold and no risk to compromising the electronics.

Display Options Available

The 231RS has an optional LCD display which gives the user the ability to view the high, low and differential pressure outputs locally at the device. The visual indicator gives instant feedback providing performance validation to the user.

- **Wet-to-Wet w/ Remote Sensors**
- **Armored Jacket, Conduit, Cable Versions**
- **Optional LCD Display w/ Hinged Cover**

Model 231RS Features:

- Remote Sensor Design
- Labor and Material Costs Cut By One Third
- Field Selectable Ranges
- Field Selectable Outputs
- Field Accessible Push Button & Remote Zero
- Jumper Selectable Port Swap
- All Cast Aluminum, NEMA 4 Rated Housing
- CE & RoHS Compliant

Applications:

- Energy Management Systems
- Process Control Systems
- Flow Measurement of Various Gases or Liquids
- Liquid Level Measurement of Pressurized Vessels
- Pressure Drop Across Filters

Phone: 800-257-3872 • Fax: 978-264-0292 • setra.com © Setra Systems, Inc. All rights reserved. The Setra Systems name and logo are registered trademarks of Setra Systems, Inc.

Multi-Sense® Model 231RS

Multi-Configurable, Wet-to-Wet Differential Pressure Transducer

REMOTE SENSOR DIMENSIONS

Transducer w/Conduit (3M)

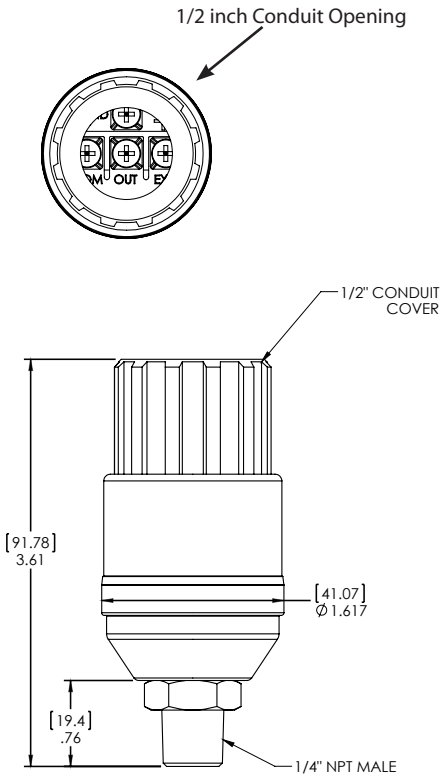

GENERAL SPECIFICATIONS

Electrical Data (Voltage)	
Circuit	3-Wire
Excitation	15 to 30 VDC/18 to 30 VAC[6] (Reverse Excitation Protected)
Output[1]	0 to 5 VDC, 0 to 10 VDC, 1 to 5 VDC
Output Impedance	30 Ohms
Circuit Consumption	8 mA (typ.) at 5 VDC, 8 mA (typ) at 10 VDC, 40 mA (typ.) at 18-30 VAC
Electrical Data (Current)	
Circuit	2-wire (Reverse Excitation Protected)
Output[2]	4 to 20 mA
External Load	0 to 250 Ohms
Min. Supply Voltage	15 VDC + 0.02 x Resistance of receiver plus line)
Max. Supply Voltage	30 VDC + 0.004 x Resistance of receiver plus line)
Physical Description	
Case	Die Cast Aluminum, Powder Coated
Pressure Fittings	1/4-18 NPT Male
Electrical Connection	1/2 in. Conduit
Size	4.0 x 6 x 2 in. (102 x 152 x 51 mm)
Weight	1.3 lb
Environmental Data	
Operating[3] Temperature °F (°C)	-4 to +185 (-20 to -85)
Storage Temperature °F (°C)	-4 to +185 (-20 to +85)
Vibration	10g from 50Hz to 2000 Hz
Shock	200g

Performance Data					
Accuracy RSS[4] (at constant temp.)					
Pressure Ranges A, B, C	±1.0% FS				
Pressure Ranges D	±2.0% FS				
Pressure Ranges (Selection Example, Pg 4.)					
Range Code	A	B	C	D	Max. Line Pressure
RS1	50	25	10	5	50
RS2	75	37.5	15	7.5	75
RS3	100	50	20	10	100
RS4	150	75	30	15	150
RS5	250	125	50	25	250
Pressure Media					
Liquids or Gases Compatible with 17-4 PH Stainless Steel Note: Hydrogen not recommended for use with 17-4 PH stainless steel					
Thermal Effects[5]					
Compensated Range °F (°C)	+32 to +130 (0 to +54)				
Zero/Span Shift %FS/100°F (50°C)	2.0 (1.8)				
Warm-up Shift	<0.12% FS				
Response Time	1 to 5 sec. (selectable)				
Proof Pressure	2 x Full Scale				
Burst Pressure	15 x Full Scale (50 psi), 10 x Full Scale (75 x 150 psi), 8 x Full Scale (250 PSI)				

[1] Calibrated into a 50K ohm load, operable into a 5000 ohm load or greater.
[2] Calibrated at factory with a 24 VDC loop supply voltage and a 250 ohm load.
[3] Operating temperature limits of the electronics only. Pressure media temperatures may be considerably higher or lower.
[4] RSS of Non-Linearity, Hysteresis, and Non-Repeatability.
[5] Units calibrated at nominal 70˚F. Maximum thermal error computed from this datum. Specifications subject to change without notice.
[6] NOT RECOMMENDED TO CONNECT VAC EXCITATION TO EARTH (SAFETY) GROUND

Transducer w/Hirschmann Connector (AJ)

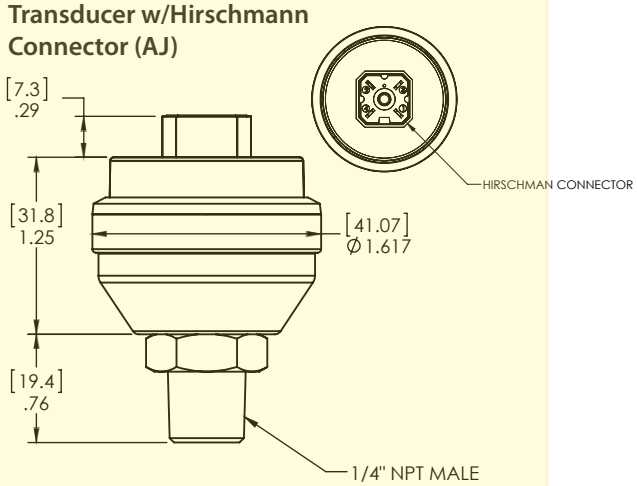

Transducer w/Packard Connector (4M)

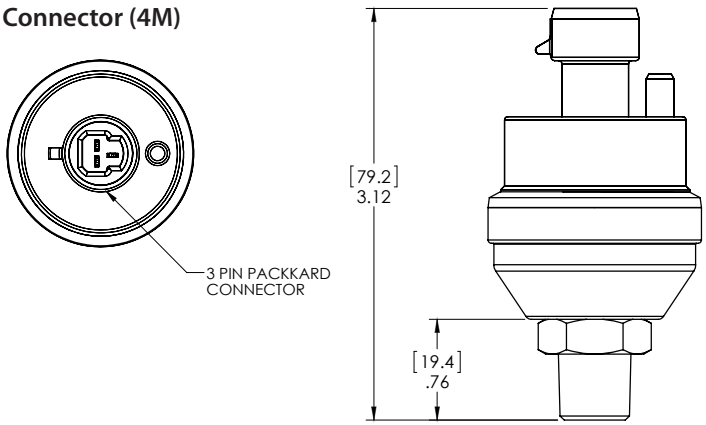

 © Setra Systems, Inc. All rights reserved. The Setra Systems name and logo are registered trademarks of Setra Systems, Inc.

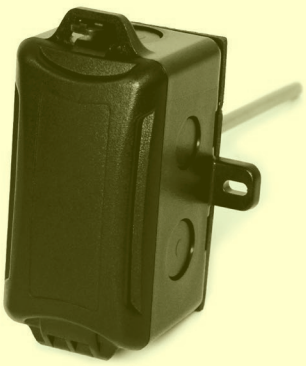

Featured Thermistor Product

Duct

Duct w/o Box

Probe Only

Pipe Mount

Immersion w/o Well

Copper Averaging

Flexible Averaging

Strap

Outdoor Air

Raw Potted Sensor

Raw, 6′ Leads

Bullet Probe

Bullet Probe, 20′ Z

Rigid Averaging

Immersion, Two Piece Well

Immersion, Machined Well

THERMISTORS

General Mounting

ACI offers a comprehensive selection of general mounting configurations for Thermistors (see list above). These sensors provide a predictable and accurate output over the specified temperature range. Each sensor configuration is designed and manufactured for long-term quality and performance. ACI incorporates standard features such as double encapsulation and etched Teflon leads where applicable.

The ACI Thermistor Series is covered by ACI's Five (5) year limited warranty, which is located in the front of ACI's Sensors & Transmitters catalog or can be found on ACI's web site, which is www.workaci.com.

SPECIFICATIONS

Accuracy (0-70ºC)	Single Point: +/-0.2ºC (+/-0.36ºF)
Stability	+/-0.13ºC (+/-0.23ºF)
Interchangeability	+/-0.2ºC (+/-0.36ºF)
Operating Temperature Range	-40 to 302ºF (-40 to 150ºC)
Sensor Output [A/AN]	10KΩ @ 77ºF (Type III)
Sensor Output [A/CP]	10KΩ @ 77ºF (Type II)
Sensor Output [A/3K]	3KΩ @77ºF (25ºC)
Sensor Output [A/1.8K]	1.8KΩ @77ºF (25ºC)
Sensor Output [A/20K]	20KΩ @77ºF (25ºC)
Sensor Output [A/100KS]	100KΩ @77ºF (25ºC)

Sensor Output [A/10KS]	10KΩ @77ºF (25ºC)
Sensor Output [A/2252]	2252Ω @77ºF (25ºC)
Sensor Output [A/CSI]	10KΩ @77ºF (25ºC)
Sensor Output [A/AN-BC]	10KΩ with 11K Shunt
Sensor Output [A/10K-E]	10KΩ @77ºF (25ºC)
Sensor Output [A/10K-E1]	10KΩ @77ºF (25ºC)
Power Dissipation Constant	3 mW/ºC
Operating Humidity	10 to 95% RH non-condensing
Product Dimensions	Please reference pages 5, 6, 7 & 8

ORDERING

Select one Series (A), one Configuration (B), one Length (C), one Enclosure (D) & one Lead Wire (E) (optional). **NOTE:** See Thermowell data sheet for proper well selection for all Immersion related sensors. Enclosure options (D) include Plastic Box (PB), Galvanized Box (GD), NEMA 3R (BB), NEMA 4X (4X), & Euro Housing (EH). The Plastic Box (PB) is rated from 0 to 203ºF. Stay within the same row throughout the selection process for all General Mounting pages. ▸

A Sensor Series

◯ A/AN	◯ A/3K	◯ A/20K	◯ A/10KS	◯ A/CSI	◯ A/10K-E
◯ A/CP	◯ A/1.8K	◯ A/100KS	◯ A/2252	◯ A/AN-BC	◯ A/10K-E1

B Configuration	C Length	D Enclosure	E Lead Wire
◯ D (Duct) ▸	◯ 4″ ◯ 6″ ◯ 8″ ◯ 12″ ◯ 18″ ▸	◯ PB ◯ GD ◯ BB ◯ 4X ◯ EH ▸	◯ ---- (N/A)
◯ DO (Duct w/o Box) ▸	◯ 4″ ◯ 6″ ◯ 8″ ◯ 12″ ◯ 18″ ▸	◯ ---- (No Enclosure) ▸	◯ ---- (N/A)
◯ PO (Probe Only) ▸	◯ 4″ ◯ 6″ ◯ 8″ ◯ 12″ ◯ 18″ ▸	◯ ---- (No Enclosure) ▸	◯ 6′CL2P ◯ 10′CL2P ◯ 20′CL2P
◯ I (Immersion, Two Piece Well) ▸	◯ 2.5″ ◯ 4″ ◯ 6″ ▸	◯ PB ◯ GD ◯ BB ◯ 4X ◯ EH ▸	◯ ---- (N/A)
◯ IM (Immersion, Machined Well) ▸	◯ 1″ ◯ 2.5″ ◯ 4″ ◯ 6″ ◯ 12″ ▸	◯ PB ◯ GD ◯ BB ◯ 4X ◯ EH ▸	◯ ---- (N/A)
◯ INW (Immersion w/o Well) ▸	◯ 2.5″ ◯ 4″ ◯ 6″ ◯ 12″ ▸	◯ PB ◯ GD ◯ BB ◯ 4X ◯ EH ▸	◯ ---- (N/A)
◯ A (Copper Averaging) ▸	◯ 8′ ◯ 12′ ◯ 24′ ◯ 50′ ▸	◯ PB ◯ GD ◯ BB ◯ 4X ◯ EH ▸	◯ ---- (N/A)
◯ FA (Flexible Cable Averaging) ▸	◯ 8′ ◯ 12′ ◯ 24′ ◯ 50′ ▸	◯ PB ◯ GD ◯ BB ◯ 4X ◯ EH ▸	◯ ---- (N/A)
◯ RA (Rigid Averaging) ▸	◯ 18″ ◯ 24″ ◯ 36″ ▸	◯ PB ◯ GD ◯ BB ◯ 4X ◯ EH ▸	◯ ---- (N/A)
◯ S (Strap) ▸	◯ ---- (No Length) ▸	◯ PB ◯ GD ◯ ---- ◯ 4X ◯ EH ▸	◯ ---- (N/A)
◯ O (Outdoor Air) ▸	◯ ---- (No Length) ▸	◯ ---- ◯ ---- ◯ BB ◯ 4X ◯ EH ▸	◯ ---- (N/A)
◯ W (Raw Potted Sensor) ▸	◯ ---- (No Length) ▸	◯ ---- (No Enclosure) ▸	◯ ---- (N/A)
◯ W-6′ (Raw w/6′ Leads) ▸	◯ ---- (No Length) ▸	◯ ---- (No Enclosure) ▸	◯ ---- (N/A)
◯ BP (Bullet Probe, Plenum Cable) ▸	◯ ---- (No Length) ▸	◯ ---- (No Enclosure) ▸	◯ 6′CL2P ◯ 10′CL2P ◯ 20′CL2P
◯ BP (Bullet Probe, Teflon leads) ▸	◯ ---- (No Length) ▸	◯ ---- (No Enclosure) ▸	◯ ---- (N/A)
◯ BP-20′Z (BP, 20′ Zip Wire) ▸	◯ ---- (No Length) ▸	◯ ---- (No Enclosure) ▸	◯ ---- (N/A)
◯ PM (Pipe Mount) ▸	◯ ---- (No Length) ▸	◯ ---- (No Enclosure) ▸	◯ ---- (N/A)
◯ PM (Pipe Mount, Plenum Cable) ▸	◯ ---- (No Length) ▸	◯ ---- (No Enclosure) ▸	◯ 6′CL2P 10′CL2P 20′CL2P
◯ PM (Pipe Mount, Zip Wire) ▸	◯ ---- (No Length) ▸	◯ ---- (No Enclosure) ▸	◯ 6′-Z 10′-Z 20′-Z

BUILD PART NUMBER

After completing (A), (B), (C), (D) & (E) from the above table, fill in the "Part Number Table" below. An example part number is offered.

A	B	C	D	E

EXAMPLE: A/CP - D - 4″ - PB

The ACI Mars Plastic Duct housing (PB) has been tested to and complies with the requirements specified in the UL 2043 Standard for Fire Test for heat and visible smoke release for discrete products and their accessories installed in air-handling spaces. The Plastic Box has a UL94-HB rating. The NEMA 4X enclosure has a UL94-V2 flammability rating. The Euro Housing enclosure has a UL94-V0 flammability rating. CE exception: Averaging units and any other configuration with leads longer than 3 meters.

Featured Thermistor Product
Duct

Duct w/o Box

Probe Only

Pipe Mount

Immersion w/o Well

Copper Averaging

Flexible Averaging

Strap

Outdoor Air

Raw Potted Sensor

Raw, 6′ Leads

Bullet Probe

Bullet Probe, 20′ Z

Rigid Averaging

Immersion, Two Piece Well

Immersion, Machined Well

THERMISTORS

General Mounting

ACI offers a comprehensive selection of general mounting configurations for Thermistors (see list above). These sensors provide a predictable and accurate output over the specified temperature range. Each sensor configuration is designed and manufactured for long-term quality and performance. ACI incorporates standard features such as double encapsulation and etched Teflon leads where applicable.

The ACI Thermistor Series is covered by ACI's Five (5) year limited warranty, which is located in the front of ACI's Sensors & Transmitters catalog or can be found on ACI's web site, which is www.workaci.com.

SPECIFICATIONS

Accuracy (0-70ºC)	Single Point: +/-0.2ºC (+/-0.36ºF)
Stability	+/-0.13ºC (+/-0.23ºF)
Interchangeability	+/-0.2ºC (+/-0.36ºF)
Operating Temperature Range	-40 to 302ºF (-40 to 150ºC)
Sensor Output [A/AN]	10KΩ @ 77ºF (Type III)
Sensor Output [A/CP]	10KΩ @ 77ºF (Type II)
Sensor Output [A/3K]	3KΩ @77ºF (25ºC)
Sensor Output [A/1.8K]	1.8KΩ @77ºF (25ºC)
Sensor Output [A/20K]	20KΩ @77ºF (25ºC)
Sensor Output [A/100KS]	100KΩ @77ºF (25ºC)
Sensor Output [A/10KS]	10KΩ @77ºF (25ºC)
Sensor Output [A/2252]	2252Ω @77ºF (25ºC)
Sensor Output [A/CSI]	10KΩ @77ºF (25ºC)
Sensor Output [A/AN-BC]	10KΩ with 11K Shunt
Sensor Output [A/10K-E]	10KΩ @77ºF (25ºC)
Sensor Output [A/10K-E1]	10KΩ @77ºF (25ºC)
Power Dissipation Constant	3 mW/ºC
Operating Humidity	10 to 95% RH non-condensing
Product Dimensions	Please reference pages 5, 6, 7 & 8

ORDERING

Select one Series (A), one Configuration (B), one Length (C), one Enclosure (D) & one Lead Wire (E) (optional). **NOTE:** See Thermowell data sheet for proper well selection for all Immersion related sensors. Enclosure options (D) include Plastic Box (PB), Galvanized Box (GD), NEMA 3R (BB), NEMA 4X (4X), & Euro Housing (EH). The Plastic Box (PB) is rated from 0 to 203ºF. Stay within the same row throughout the selection process for all General Mounting pages. ▸

A Sensor Series

◯ A/AN	◯ A/3K	◯ A/20K	◯ A/10KS	◯ A/CSI	◯ A/10K-E
◯ A/CP	◯ A/1.8K	◯ A/100KS	◯ A/2252	◯ A/AN-BC	◯ A/10K-E1

B Configuration	C Length	D Enclosure	E Lead Wire
◯ **D** (Duct) ▸	◯ 4″ ◯ 6″ ◯ 8″ ◯ 12″ ◯ 18″ ▸	◯ PB ◯ GD ◯ BB ◯ 4X ◯ EH ▸	◯ ---- (N/A)
◯ **DO** (Duct w/o Box) ▸	◯ 4″ ◯ 6″ ◯ 8″ ◯ 12″ ◯ 18″ ▸	◯ ---- (No Enclosure) ▸	◯ ---- (N/A)
◯ **PO** (Probe Only) ▸	◯ 4″ ◯ 6″ ◯ 8″ ◯ 12″ ◯ 18″ ▸	◯ ---- (No Enclosure) ▸	◯ 6′CL2P ◯ 10′CL2P ◯ 20′CL2P
◯ **I** (Immersion, Two Piece Well) ▸	◯ 2.5″ ◯ 4″ ◯ 6″ ▸	◯ PB ◯ GD ◯ BB ◯ 4X ◯ EH ▸	◯ ---- (N/A)
◯ **IM** (Immersion, Machined Well) ▸	◯ 1″ ◯ 2.5″ ◯ 4″ ◯ 6″ ◯ 12″ ▸	◯ PB ◯ GD ◯ BB ◯ 4X ◯ EH ▸	◯ ---- (N/A)
◯ **INW** (Immersion w/o Well) ▸	◯ 2.5″ ◯ 4″ ◯ 6″ ◯ 12″ ▸	◯ PB ◯ GD ◯ BB ◯ 4X ◯ EH ▸	◯ ---- (N/A)
◯ **A** (Copper Averaging) ▸	◯ 8′ ◯ 12′ ◯ 24′ ◯ 50′ ▸	◯ PB ◯ GD ◯ BB ◯ 4X ◯ EH ▸	◯ ---- (N/A)
◯ **FA** (Flexible Cable Averaging) ▸	◯ 8′ ◯ 12′ ◯ 24′ ◯ 50′ ▸	◯ PB ◯ GD ◯ BB ◯ 4X ◯ EH ▸	◯ ---- (N/A)
◯ **RA** (Rigid Averaging) ▸	◯ 18″ ◯ 24″ ◯ 36″ ▸	◯ PB ◯ GD ◯ BB ◯ 4X ◯ EH ▸	◯ ---- (N/A)
◯ **S** (Strap) ▸	◯ ---- (No Length) ▸	◯ PB ◯ GD ◯ ---- ◯ 4X ◯ EH ▸	◯ ---- (N/A)
◯ **O** (Outdoor Air) ▸	◯ ---- (No Length) ▸	◯ ---- ◯ ---- ◯ BB ◯ 4X ◯ EH ▸	◯ ---- (N/A)
◯ **W** (Raw Potted Sensor) ▸	◯ ---- (No Length) ▸	◯ ---- (No Enclosure) ▸	◯ ---- (N/A)
◯ **W-6′** (Raw w/6′ Leads) ▸	◯ ---- (No Length) ▸	◯ ---- (No Enclosure) ▸	◯ ---- (N/A)
◯ **BP** (Bullet Probe, Plenum Cable) ▸	◯ ---- (No Length) ▸	◯ ---- (No Enclosure) ▸	◯ 6′CL2P ◯ 10′CL2P ◯ 20′CL2P
◯ **BP** (Bullet Probe, Teflon leads) ▸	◯ ---- (No Length) ▸	◯ ---- (No Enclosure) ▸	◯ ---- (N/A)
◯ **BP-20′Z** (BP, 20′ Zip Wire) ▸	◯ ---- (No Length) ▸	◯ ---- (No Enclosure) ▸	◯ ---- (N/A)
◯ **PM** (Pipe Mount) ▸	◯ ---- (No Length) ▸	◯ ---- (No Enclosure) ▸	◯ ---- (N/A)
◯ **PM** (Pipe Mount, Plenum Cable) ▸	◯ ---- (No Length) ▸	◯ ---- (No Enclosure) ▸	◯ 6′CL2P 10′CL2P 20′CL2P
◯ **PM** (Pipe Mount, Zip Wire) ▸	◯ ---- (No Length) ▸	◯ ---- (No Enclosure) ▸	◯ 6′-Z 10′-Z 20′-Z

BUILD PART NUMBER

After completing (A), (B), (C), (D) & (E) from the above table, fill in the "Part Number Table" below. An example part number is offered.

A	B	C	D	E

EXAMPLE: A/CP - D - 4″ - PB

The ACI Mars Plastic Duct housing (PB) has been tested to and complies with the requirements specified in the UL 2043 Standard for Fire Test for heat and visible smoke release for discrete products and their accessories installed in air-handling spaces. The Plastic Box has a UL94-HB rating. The NEMA 4X enclosure has a UL94-V2 flammability rating. The Euro Housing enclosure has a UL94-V0 flammability rating. CE exception: Averaging units and any other configuration with leads longer than 3 meters.

Featured Thermistor Product

Duct

Duct w/o Box

Probe Only

Pipe Mount

Immersion w/o Well

Copper Averaging

Flexible Averaging

Strap

Outdoor Air

Raw Potted Sensor

Raw, 6′ Leads

Bullet Probe

Bullet Probe, 20′ Z

Rigid Averaging

Immersion, Two Piece Well

Immersion, Machined Well

THERMISTORS

General Mounting

ACI offers a comprehensive selection of general mounting configurations for Thermistors (see list above). These sensors provide a predictable and accurate output over the specified temperature range. Each sensor configuration is designed and manufactured for long-term quality and performance. ACI incorporates standard features such as double encapsulation and etched Teflon leads where applicable.

The ACI Thermistor Series is covered by ACI's Five (5) year limited warranty, which is located in the front of ACI's Sensors & Transmitters catalog or can be found on ACI's web site, which is www.workaci.com.

SPECIFICATIONS

Accuracy (0-70ºC)	Single Point: +/-0.2ºC (+/-0.36ºF)
Stability	+/-0.13ºC (+/-0.23ºF)
Interchangeability	+/-0.2ºC (+/-0.36ºF)
Operating Temperature Range	-40 to 302ºF (-40 to 150ºC)
Sensor Output [A/AN]	10KΩ @ 77ºF (Type III)
Sensor Output [A/CP]	10KΩ @ 77ºF (Type II)
Sensor Output [A/3K]	3KΩ @77ºF (25ºC)
Sensor Output [A/1.8K]	1.8KΩ @77ºF (25ºC)
Sensor Output [A/20K]	20KΩ @77ºF (25ºC)
Sensor Output [A/100KS]	100KΩ @77ºF (25ºC)

Sensor Output [A/10KS]	10KΩ @77ºF (25ºC)
Sensor Output [A/2252]	2252Ω @77ºF (25ºC)
Sensor Output [A/CSI]	10KΩ @77ºF (25ºC)
Sensor Output [A/AN-BC]	10KΩ with 11K Shunt
Sensor Output [A/10K-E]	10KΩ @77ºF (25ºC)
Sensor Output [A/10K-E1]	10KΩ @77ºF (25ºC)
Power Dissipation Constant	3 mW/ºC
Operating Humidity	10 to 95% RH non-condensing
Product Dimensions	Please reference pages 5, 6, 7 & 8

ORDERING

Select one Series (A), one Configuration (B), one Length (C), one Enclosure (D) & one Lead Wire (E) (optional). **NOTE:** See Thermowell data sheet for proper well selection for all Immersion related sensors. Enclosure options (D) include Plastic Box (PB), Galvanized Box (GD), NEMA 3R (BB), NEMA 4X (4X), & Euro Housing (EH). The Plastic Box (PB) is rated from 0 to 203ºF. Stay within the same row throughout the selection process for all General Mounting pages. ▸

A Sensor Series

◯ A/AN	◯ A/3K	◯ A/20K	◯ A/10KS	◯ A/CSI	◯ A/10K-E
◯ A/CP	◯ A/1.8K	◯ A/100KS	◯ A/2252	◯ A/AN-BC	◯ A/10K-E1

B Configuration	C Length	D Enclosure	E Lead Wire
◯ **D** (Duct) ▸	◯ 4″ ◯ 6″ ◯ 8″ ◯ 12″ ◯ 18″ ▸	◯ PB ◯ GD ◯ BB ◯ 4X ◯ EH ▸	◯ ---- (N/A)
◯ **DO** (Duct w/o Box) ▸	◯ 4″ ◯ 6″ ◯ 8″ ◯ 12″ ◯ 18″ ▸	◯ ---- (No Enclosure) ▸	◯ ---- (N/A)
◯ **PO** (Probe Only) ▸	◯ 4″ ◯ 6″ ◯ 8″ ◯ 12″ ◯ 18″ ▸	◯ ---- (No Enclosure) ▸	◯ 6′CL2P ◯ 10′CL2P ◯ 20′CL2P
◯ **I** (Immersion, Two Piece Well) ▸	◯ 2.5″ ◯ 4″ ◯ 6″ ▸	◯ PB ◯ GD ◯ BB ◯ 4X ◯ EH ▸	◯ ---- (N/A)
◯ **IM** (Immersion, Machined Well) ▸	◯ 1″ ◯ 2.5″ ◯ 4″ ◯ 6″ ◯ 12″ ▸	◯ PB ◯ GD ◯ BB ◯ 4X ◯ EH ▸	◯ ---- (N/A)
◯ **INW** (Immersion w/o Well) ▸	◯ 2.5″ ◯ 4″ ◯ 6″ ◯ 12″ ▸	◯ PB ◯ GD ◯ BB ◯ 4X ◯ EH ▸	◯ ---- (N/A)
◯ **A** (Copper Averaging) ▸	◯ 8′ ◯ 12′ ◯ 24′ ◯ 50′ ▸	◯ PB ◯ GD ◯ BB ◯ 4X ◯ EH ▸	◯ ---- (N/A)
◯ **FA** (Flexible Cable Averaging) ▸	◯ 8′ ◯ 12′ ◯ 24′ ◯ 50′ ▸	◯ PB ◯ GD ◯ BB ◯ 4X ◯ EH ▸	◯ ---- (N/A)
◯ **RA** (Rigid Averaging) ▸	◯ 18″ ◯ 24″ ◯ 36″ ▸	◯ PB ◯ GD ◯ BB ◯ 4X ◯ EH ▸	◯ ---- (N/A)
◯ **S** (Strap) ▸	◯ ---- (No Length) ▸	◯ PB ◯ GD ◯ ---- ◯ 4X ◯ EH ▸	◯ ---- (N/A)
◯ **O** (Outdoor Air) ▸	◯ ---- (No Length) ▸	◯ ---- ◯ ---- ◯ BB ◯ 4X ◯ EH ▸	◯ ---- (N/A)
◯ **W** (Raw Potted Sensor) ▸	◯ ---- (No Length) ▸	◯ ---- (No Enclosure) ▸	◯ ---- (N/A)
◯ **W-6′** (Raw w/6′ Leads) ▸	◯ ---- (No Length) ▸	◯ ---- (No Enclosure) ▸	◯ ---- (N/A)
◯ **BP** (Bullet Probe, Plenum Cable) ▸	◯ ---- (No Length) ▸	◯ ---- (No Enclosure) ▸	◯ 6′CL2P ◯ 10′CL2P ◯ 20′CL2P
◯ **BP** (Bullet Probe, Teflon leads) ▸	◯ ---- (No Length) ▸	◯ ---- (No Enclosure) ▸	◯ ---- (N/A)
◯ **BP-20′Z** (BP, 20′ Zip Wire) ▸	◯ ---- (No Length) ▸	◯ ---- (No Enclosure) ▸	◯ ---- (N/A)
◯ **PM** (Pipe Mount) ▸	◯ ---- (No Length) ▸	◯ ---- (No Enclosure) ▸	◯ ---- (N/A)
◯ **PM** (Pipe Mount, Plenum Cable) ▸	◯ ---- (No Length) ▸	◯ ---- (No Enclosure) ▸	◯ 6′CL2P 10′CL2P 20′CL2P
◯ **PM** (Pipe Mount, Zip Wire) ▸	◯ ---- (No Length) ▸	◯ ---- (No Enclosure) ▸	◯ 6′-Z 10′-Z 20′-Z

BUILD PART NUMBER

After completing (A), (B), (C), (D) & (E) from the above table, fill in the "Part Number Table" below. An example part number is offered.

A	B	C	D	E

EXAMPLE: A/CP - D - 4″ - PB

The ACI Mars Plastic Duct housing (PB) has been tested to and complies with the requirements specified in the UL 2043 Standard for Fire Test for heat and visible smoke release for discrete products and their accessories installed in air-handling spaces. The Plastic Box has a UL94-HB rating. The NEMA 4X enclosure has a UL94-V2 flammability rating. The Euro Housing enclosure has a UL94-V0 flammability rating. CE exception: Averaging units and any other configuration with leads longer than 3 meters.

SUN SHIELD

Shield for Sun/Weather Protection

The ACI Sun Shield is a reliable solution for protecting temperature and relative humidity sensors. It consists of nine molded plastic plates which provide maximum airflow around the sensor while at the same time minimizing direct exposure to sunlight. The passive shield is shaped to allow natural air convection around the sensor, ensuring that the air temperature inside the shield is a good representation of the outside air. The shield also provides protection from rain and snow.

The ACI SUN SHIELD is covered by ACI's Five (5) Year Limited Warranty. The warranty can be found in the front of ACI's Sensors & Transmitters catalog, as well as on ACI's web site, www.workaci.com.

A/RH-3-AN-O-SUN

SPECIFICATIONS

Product Dimensions	(W) 9.38" (H) 15.76"

For Relative supply voltage and performance specifications, see corresponding Humidity Specification sheets.

ORDERING

Please select a Temperature Option (A) for either a Humidity Sensor (Blue Part Number) or Temperature Sensor (Orange Part Number). **NOTE:** The SUN SHIELD mounts directly to piping or building structures with the bracket hardware, and includes a water-tight fitting for wiring.

A Temperature Option

◯ **----** (None)	◯ **1.8K** (1.8K Ohm Thermistor)	◯ **100** (100 Ohm Thermistor)
◯ **CP** (10K Ohm Thermistor, Type II)	◯ **100KS** (100KS Ohm Thermistor)	◯ **1K** (1000 Ohm Thermistor)
◯ **AN** (10K Ohm Thermistor, Type III)	◯ **10KS** (10K Ohm Thermistor)	◯ **TT100** (Temperature Transmitter, 100 Ohm)
◯ **20K** (20K Ohm Thermistor)	◯ **3K** (3K Ohm Thermistor)	◯ **TT1K** (Temperature Transmitter, 1000 Ohm)

BUILD PART NUMBER

After completing (A) from the above table, fill in either the Humidity Part Number Table or the Temperature Part Number Table below. The "Sensor Series, Accuracy, NEMA 4X & Classification" are factory defaults. An example part number is offered.

A/RH	–	2%	–		–	O	–	SUN
SENSOR SERIES		ACCURACY		A		NEMA 4X		CLASSIFICATION

EXAMPLE: A/RH - 2% - AN - O - SUN

A/	–		–	O	–	SUN
SENSOR SERIES		A		NEMA 4X		CLASSIFICATION

EXAMPLE: A/ - CP - O - SUN

Allure™ EC-Smart-Vue Sensor Series

Line of communicating sensors with backlit display and graphical menus

Overview

The Allure EC-Smart-Vue Series is designed to interface with Distech Controls' ECLYPSE™ series BACnet/IP and Wi-Fi Controllers, ECB series BACnet® Controllers and ECL series LonWorks® Controllers.

This line of communicating sensors with backlit display consists of eight models that provide precise environmental zone control. Models are available with any combination of the following: temperature, humidity, CO_2, and motion sensor.

Features & Benefits

- Multi-sensing capabilities (temperature, humidity, CO_2, and motion) using one wire and one connection
- Optional CO_2 sensor facilitates demand-controlled ventilation strategies
- Optional motion sensor helps achieve energy efficiency through occupancy-based control
- Automatic self-calibration system guarantees lifetime CO_2 calibration
- The ECO-Vue leaf pattern graphically indicates energy consumption in real time to promote an occupant's energy-conscious behavior
- Password protected technician mode allows an installer to perform commissioning and troubleshooting
- Can be used as a hand-held tool for HVAC equipment configuration and system troubleshooting
- When associated to VAV controllers, the Allure EC-Smart-Vue Series sensors can also perform air balancing of the system without requiring an onsite controls engineer.
- Programmability with Distech Controls' EC-*gfx*Program, which makes Building Automation System programming effortless
- Quick and easy installation: Both power and communications pass through a single Cat 5e cable for reduced installation costs and easier installation
- Two RJ-45 ports facilitate the daisy-chain connections of room devices.

Model Selection Table

Example: Allure EC-Smart-Vue-*M*

Series	Functionality
Allure EC-Smart-Vue	[blank]**:** Temperature only *-C*: CO_2[1], Temperature *-H*: Humidity, Temperature *-M*: Motion, Temperature *-CH*: CO_2[1], Humidity, Temperature *-CM*: CO_2[1], Motion, Temperature *-HM*: Humidity, Motion, Temperature *-CHM*: CO_2[1], Humidity, Motion, Temperature

1. The Allure EC-Smart-Vue CO_2 models must be used in spaces that are periodically unoccupied (e.g. during evening or nighttime hours). A controller can support a maximum of two communicating sensors equipped with a CO_2 sensor. Any remaining connected communicating sensors must be without a CO_2 sensor.

Product Specifications

Power Supply Input

Voltage	16 VDC maximum, Class 2
Power Consumption	At the connected controller, an additional 5.25 VA per CO_2 sensor model and 1.0 VA per non-CO_2 sensor model.

Communications

Rate	38 400 bps
Communications	RS-485
Wiring	Cable length: 600 ft (180 m) maximum
Cable Type	T568B Cat 5e network cable, 4 twisted pairs
Input Connector	RJ-45
Output Connector	RJ-45 (pass-through for daisy chain connection to other room devices)
Network Access Jack[1]	⅛" (3.5 mm) stereo plug connector
Daisy-chaining	Up to 12 Allure EC-Smart-Vue sensors or room devices depending on the controller model – see the controller's datasheet

1. Not available with ECLYPSE Series, PTU Series, ECB-VAVS, or ECL-VAVS

Temperature Sensor

Type	10 kΩ NTC Thermistor
Range	41°F to 104°F (5°C to 40°C)
Sensing Component Typical Accuracy	±0.5°F (±0.28°C)
Overall Accuracy	± 0.9°F (± 0.5°C)
Resolution	0.18°F (0.1°C)

Humidity Sensor

Accuracy	±3%
Resolution	1%

Motion Sensor

Type	Passive Infrared (PIR) sensor with Fresnel lens. See Figure 2.

CO_2 Sensor

Measurement Range	0 to 2000 ppm
Operating Elevation	0 to 10000 ft (0 to 3050 m)
Warm-up Time	< 2 minutes (operational), 10 minutes (maximum accuracy)
CO_2 Accuracy	400-1000 ppm ± 75 ppm or 3% of reading, whichever is greater [1] 1000-2000 ppm ± (40 ppm + 5% of reading) [1]
Repeatability	± 10 ppm
Response Time	60 s
Accuracy Drift	< 0.03 °C / year
Additional accuracy drift per year after five years of sensor operation and with automatic self-calibration algorithm enabled	Typical ± (5 ppm + 0.5 % of reading)
Pressure Dependence	0.135% of reading per mm Hg; Elevation adjusted in configuration software
Sensing Method	Non-dispersive infrared (NDIR)
Calibration Method	Automatic self-calibration enabled

1. Tolerance based on span gas of ±2% and automatic self-calibration enabled.

Mechanical

Dimensions with motion sensor (H×W×D)	4.62 × 3.29 × 1.15" (117.27 × 83.57 × 28.84 mm)
Dimensions without motion sensor (H×W×D)	4.62 × 3.29 × 1.06" (117.27 × 83.57 × 26.81 mm)
Shipping weight with motion sensor	0.20 kg (0.44lbs)
Shipping weight without motion sensor	0.18 kg (0.40lbs)
Enclosure Material	ABS
Enclosure Rating	Plastic housing, UL94-V1
Color	white
Installation	wall mounting through mounting holes (see Figure 1 for hole positions)

Environmental

Operating Temperature	32°F to 122°F (0°C to 50°C)
Storage Temperature	-4°F to 122°F (-20°C to 50°C)
Relative Humidity	0 to 90% Non-condensing

WEEE	All products are marked according to the Waste Electrical and Electronic Equipment (WEEE) directive
RoHS	All materials and manufacturing processes comply with the RoHS directive

Standards and Regulations

CE Emission	EN 61000-6-3: 2007 + A1: ed.2011
CE Immunity	EN 61000-6-1: 2007
FCC	FCC rules part 15, subpart B class B
UL Listed (CDN & US)	UL916 Energy management equipment

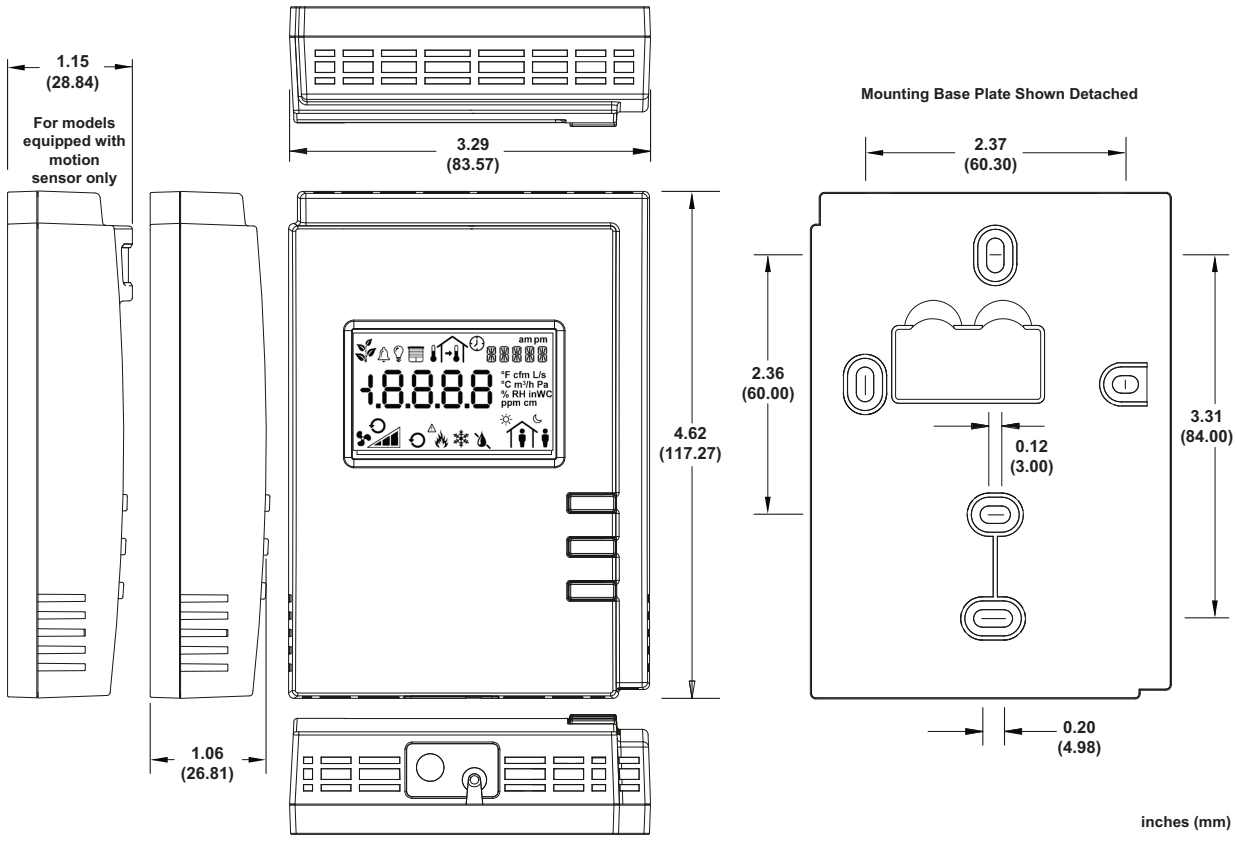

Figure 1: EC-Smart-Vue Dimensions

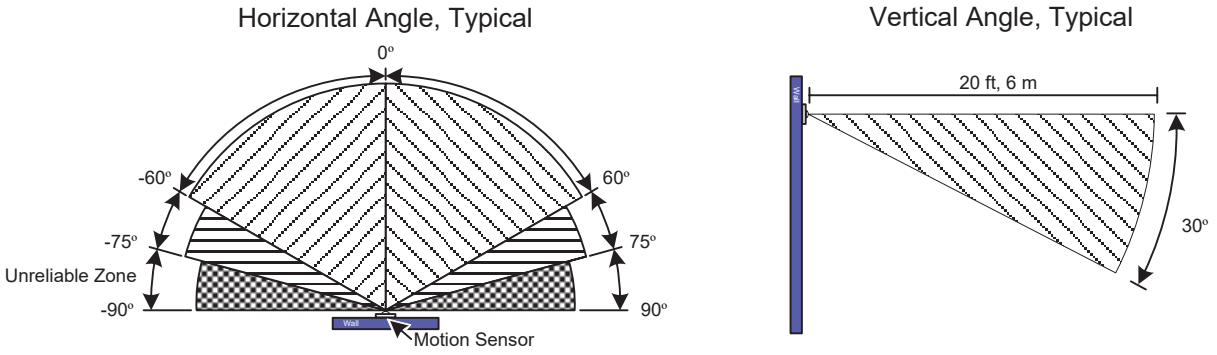

Figure 2: Motion Sensor

Specifications subject to change without notice.
ECLYPSE, Distech Controls, the Distech Controls logo, EC-Net, Allure, and Allure UNITOUCH are trademarks of Distech Controls Inc. BACnet is a registered trademark of ASHRAE; BTL is a registered trademark of the BACnet Manufacturers Association. The Bluetooth® word mark and logos are registered trademarks owned by Bluetooth SIG, Inc. and any use of such marks is under license. All other trademarks are property of their respective owners.
©, Distech Controls Inc., 2010 - 2022 All rights reserved.
Global Head Office - 4205 place de Java, Brossard, QC, Canada, J4Y 0C4 - EU Head Office - ZAC de Sacuny, 558 avenue Marcel Mérieux, 69530 Brignais, France

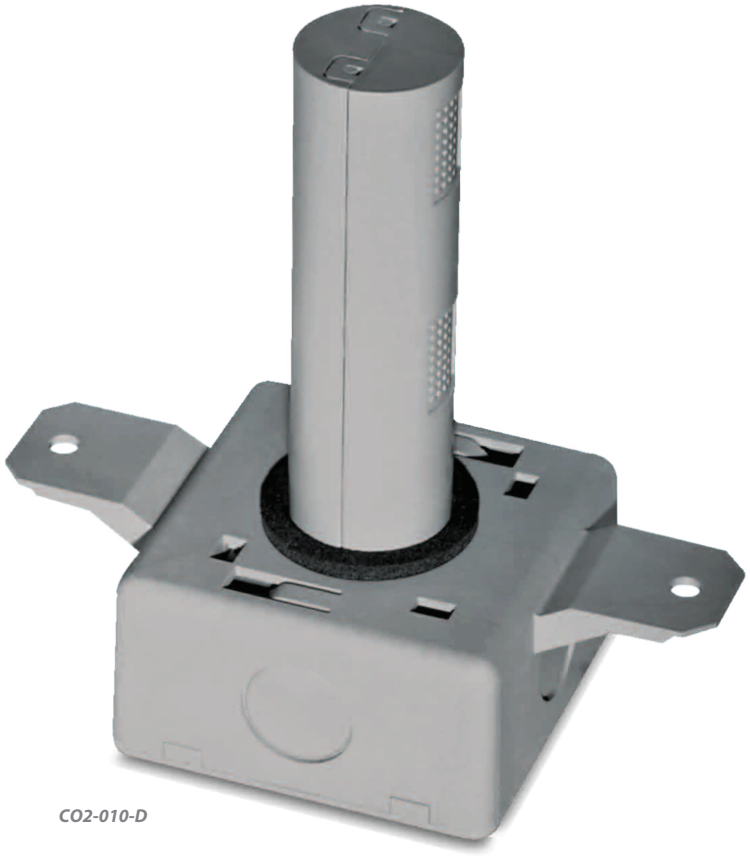

CO2-010-D

CO2 DUCT

Carbon Dioxide Sensor

The CO2-010-D monitors carbon dioxide from 0 to 2000 ppm for duct mount applications. They feature analog outputs (see order grid for output options) with a patented ABC Logic™ self-calibration system. The concentration of carbon dioxide is measured using a Single Beam, Non-Dispersive Infrared (NDIR) Absorption sensing method. They will indicate one of five approximate ppm levels. These units should not be used in environments such as greenhouses, wineries, breweries. They should also be avoided in areas where industrial sources of carbon dioxide are present or in applications where the space is left unoccupied for less than 4 hours a day.

The CO2-010-D is covered by ACI's Two (2) Year Limited Warranty. The warranty can be found in the front of ACI's Sensors & Transmitters catalog, as well as on ACI's web site, www.workaci.com.

SPECIFICATIONS

Supply Voltage	18 to 30 VAC RMS, 50/60 Hz or 18 to 42 VDC
Power Consumption (Duct)	Typical, 1.65Ω Peak, 0.65Ω Average @ 42 VDC
Measurement Range	0 to 2000 ppm
CO2 Output Signal (Duct)	0 to 10 VDC (100Ω output impedance)
Accuracy (Duct)	+/- 40 ppm +3% of Reading @ 72ºF (22ºC)
Non-Linearity	< 1% of FS @ 72ºF (22ºC)
Stability	< 2% FS over life of sensor (15 Years Typical)
Temperature Dependence	0.2% of Full Scale per ºC
Pressure Dependence	0.135% of reading per mm Hg
Response Time (Duct)	3 minutes typical for 90% Step change
Operating Temp/ RH Range	32 to 122ºF (0 to 50ºC)/0 to 95%, non-condensing
Sensor Coverage Area	7,500 sq. ft. maximum
Sensing Technology	Single beam infrared sensing tecnology (NDIR)
Product Dimensions (Duct)	(L) 3.05" (W) 3.05" (H) 5.70"

ORDERING

Select CO2-010-D as a Gas Type (A).

A Gas Type

- ◯ **CO2-010-D** (Duct) (0 to 10 VDC)

BUILD PART NUMBER

After completing (A) from the above table, fill in the Part Number Table below. An example part number is offered.

A

EXAMPLE: CO2-010-D

ECLYPSE™ Connected System Controller

ECLYPSE™

Overview

The ECLYPSE Connected System Controller (ECY-CSC) is a modular and scalable platform used to control a wide range of HVAC applications. It supports multi-protocol communications, including BACnet/IP, and is a listed BACnet Building Controller (B-BC).

The ECY-CSC consists of a control, automation and connectivity server, power supply, and I/O extension modules.

This programmable controller provides advanced functionality, such as customizable control logic, Web-based design and visualization interface (ENVYSION embedded), logging, alarming, and scheduling.

Applications

The ECY-CSC is typically used as:

- A controller for medium/large sized Air Handling Units (AHU), central plant, lighting, power monitoring, and other applications.
- Small building server and equipment controller with embedded ENVYSION. For example, it can be used to control and serve a boiler room.

Features & Benefits

Connectivity

The different types of connections supported by the ECY-CSC are as follows:

IP wired connection

Internal switch with two Ethernet ports allows the controllers to be wired in a star or daisy-chain topology. With a daisy-chain topology:

- Fewer wire runs to a centralized switch are required, thereby achieving installation and cost reduction.
- A laptop can be connected to the second Ethernet port for direct programming, configuration, and commissioning using EC-*gfx*Program or ENVYSION.

IP wireless (Wi-Fi) connection

- Wi-Fi Client - Connection to the building's existing Wi-Fi network or to another controller's Wi-Fi Hotspot or Access Point.
- Wi-Fi Access Point - extending the building's wired IP network to your Wi-Fi Client devices.

- Wi-Fi Hotspot - your own wireless area network, for wireless communication between the controllers, or with a mobile device or laptop for configuration, commissioning and servicing.

Both IP wired and wireless (Wi-Fi) connection

The availability of both Ethernet ports and USB ports for the Wi-Fi Adapter, allows for simultaneous wired IP and Wi-Fi communication on the same controller, which means you can choose and combine these connection methods. For example, Wi-Fi can be used between two controllers to jump a large atrium.

Connect from anywhere

Control technicians, facility managers, occupants, and others can easily connect to the system, on-site or off-site, using the different available tools:

- ENVYSION to create and view the graphical interface
- EC-*gfx*Program to create custom control sequences
- *my*DC Control to view, edit, and configure system operating parameters

IP Communication

- Increased speed and improved handling of numerous trend logs that enable applications, such as advanced analytics that require a large amount of data.
- Experience faster response and save time when programming, configuring, creating and viewing graphics, and upgrading your system.
- Control technicians can connect the ECLYPSE Wi-Fi Adapter to the ECY-CSC thereby creating a Wi-Fi Hotspot network. The control technician can then connect wirelessly to the system using a mobile device or laptop, for faster, easier system configuration, programming, commissioning, and servicing.
- Hostname management allows the controller to be addressed by a nickname to facilitate network management.

Open to Web Services

With the RESTful API, the ECY-CSC's data can be accessed from different applications, such as energy dashboards, analytics tools, and mobile applications. The RESTful API documentation explains the implementation protocol for this interface.

HTML5 Visual Interface

The ECY-CSC comes embedded with both ENVYSION Studio and Viewer, and xpressENVYSION.

ENVYSION – Web-based graphic design and visualization interface

ENVYSION is a web-based graphic design and visualization interface used to create and deliver interactive graphical user interfaces and an optimal user experience for building owners and facility managers to better manage facility data.

Programmability

Supports Distech Controls' EC-*gfx*Program, which makes Building Automation System (BAS) programming effortless, by allowing you to visually assemble building blocks to create a custom control sequence for any HVAC , lighting, or building automation application.

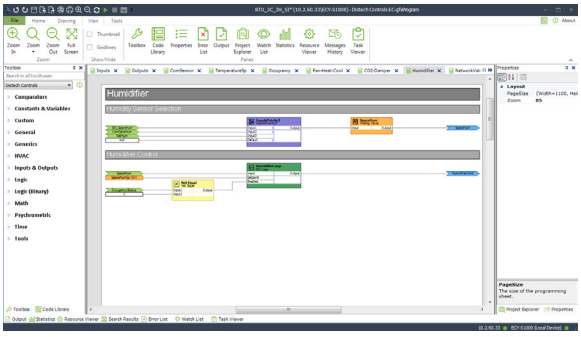

Batch EC-*gfx*Program Projects and Firmware Download

EC-*gfx*Program projects can be downloaded in batch to multiple controllers, for greater time savings. Batch firmware update can also be performed on multiple controllers.

Simplified Network Commissioning

The Xpress*Network* Utility saves you time and expense by giving you increased control over multiple ECLYPSE controllers through device discovery and batch operations such as configuring, programming, and updating multiple ECLYPSE controllers on the network.

In addition, with the embedded step by step Commissioning Wizard, all configuration operations can be setup and applied in one go.

Increase productivity using the xpress*Network* Companion mobile app, making it easier to identify and locate a controller on the network. Use the QR Code marked on ECLYPSE controllers to easily collect key controller data and to facilitate its network integration with xpress*Network* Utility.

Scalable and Modular

The ECY-CSC is sized to cost-effectively meet the requirements of any HVAC application from small to medium to large systems. The most capable Connected System Controller model can be expanded to support up to 20 input/output (I/O) modules (up to 320 I/Os) while being able to adapt to new requirements as the need arises.

A connecting cable is used to connect successive rows of modules within a controls' cabinet to provide power and communication.

ECY-RS485 communication module

An ECY-RS485 communication module adds two extra RS-485 trunks to support more BACnet MS/TP and Modbus RTU devices.

ECY-MBUS communication module

An ECY-MBUS communication module has one M-Bus port for meter integration, thus eliminating the need for a third-party gateway (from M-Bus to BACnet/IP).

BACnet/IP Device (pending)

The ECY-CSC is BTL-listed as a BACnet Building Controller (B-BC) and is certified WSP B-BC (Europe) and AMEV AS-A & AS-B (German-speaking countries). It supports BACnet/IP for faster communication in comparison to the traditional twisted pair communication bus.

Multi-Protocol Support

The ECY-CSC supports a range of communication protocols such as BACnet MS/TP, Modbus RTU, and Modbus TCP.

BACnet MS/TP and Modbus RTU communications are made by connecting directly to separate RS-485 ports. The ECY-CSC integrates up to three RS-485 ports when equipped with one ECY-RS485 extension module allowing the controller to support more than one trunk or communication protocol at a time.

MS/TP to IP routing

Integrate full MS/TP trunks into a supervisory system like the EC-Net^{AX} Supervisor, without the need for other hardware components such as an external BACnet MS/TP to IP router.

Modbus RTU and TCP

Modbus RTU and TCP communication can be used to integrate a wide variety of Modbus devices such as power and water meters, Variable Frequency Drives, air flow sensors, and more, without the need for additional hardware such as a gateway.

FIPS 140-2 Level 1 Compliant

FIPS 140-2 Level 1 compliance provides an enhanced level of security to protect data the controller is collecting and sharing making it suitable for use in the most sensitive environments.

Weather Forecast

The weather forecast is directly available from the internet to be shown on a connected ECx-Display or to be used by the controller's code.

Smart Room Control Support

The Smart Room Control solution is an end-to-end system for the control of HVAC equipment, lighting, and shades/sunblinds, achieving the highest levels of comfort for occupants while cutting costs from installation time and wiring/material requirements to energy consumption. This solution combines:

- Lighting and shade/sunblind expansion modules to control lights (on/off or dimming) and shades/sunblinds (up/down and angle rotation).
- Multi-sensor combining motion and luminosity (Lux) sensors and an Infrared receiver that works with a convenient remote control.
- The ECLYPSE platform is compatible with Distech Controls line of *Bluetooth*® low energy technology enabled devices (Allure UNITOUCH™ and EC-Multi-Sensor-BLE) and mobile application providing state-of-the-art occupant management.
- Allure™ Series Communicating room sensors for increased occupant comfort settings using integrated sensors for temperature, humidity, CO_2, and motion.

Allure™ Series Communicating Sensor Support

These controllers work with a wide range of sensors, such as the Allure Series Communicating Sensors that are designed to provide intelligent sensing and control devices for increased user experience and energy efficiency.

- Allure EC-Smart-Vue
- Allure EC-Smart-Comfort
- Allure EC-Smart-Air
- Allure UNITOUCH

Mobility

The controller can be remotely accessed to program, configure, or maintain the installation thus reducing costs associated with on-site visits. Through a mobile device or PC, a range of tasks can be performed using the following free-to-use tools and interfaces:

- ENVYSION web-based graphic design and visualization interface
- EC-*gfx*Program graphical programming interface
- *my*DC Control mobile application

Hand/Off/Auto Switches and Potentiometers

The front assembly of Hand/Off/Auto (HOA) equipped I/O models allow users to override the control outputs for commissioning and maintenance purposes.

Universal outputs have potentiometers providing manual analog signal and output control to override voltage or current signal.

High-Efficiency Design

The power supply uses the latest high-efficiency switch-mode circuitry to make more power available to operate additional modules and for cooler operation.

Hot-Swappable Tool-Less Design and Unique Latching Mechanism

The I/O modules are hot-swappable for replacement without interrupting power and communications to other modules.

The front assembly of I/O modules separate from the wiring base by pushing the two latches up to unlock a module's front assembly and then opening and pulling the hinged gull-wing covers. The latch design locks the front assembly to the wiring base.

The hinged gull-wing design protects and cover the stacked dual row I/O terminal strips.

Ease of Installation

The ECY-CSC modules are plug & play devices. They are equipped with HD-15 connectors that transmits power and communications to the next module for fast and easy assembly.

I/O Status LEDs

The status LEDs on the I/O modules allows the user to confirm the status of the inputs/outputs and facilitate commissioning and troubleshooting.

Auto-Addressing

The auto-addressing feature eliminates the need to manually assign an address to each I/O module therefore reducing installation and configuration time.

Digital Inputs Up to 120Hz

The ECY-16DI module supports pulsed signals up to 120Hz for equipment status monitoring and alarm point monitoring, commonly used in energy metering applications.

Color-Coded, Rising Cage Terminals

Terminal blocks are uniquely identified and color-coded for clarity and to prevent wiring mistakes. The rising cage clamp terminal block connectors offer a more robust and secure wire connection, designed to withstand activity and vibrations.

Robust Protection

The I/O modules are protected against mis-wiring and faults to prevent damage caused by incorrect wiring or other mishaps.

The power supply module contains over-voltage and over-current output protection to protect the electronics in unstable power supply conditions and against mis-wiring.

Alarms, Trend Log, Schedule Support

Embedded alarms, trend log and schedule support allows for fully distributed data and logic providing a more robust system. Embedded trend logs simplify system troubleshooting when compared to a centralized system.

Email Notifications Service

Technicians & facility managers can receive automatic email notifications for system status and alarms to ensure faster system servicing and response time. Email notification text can be customized to provide pertinent information about the issue at hand.

Model Selection

The ECLYPSE Connected System Controller consists of a power supply, a control, automation and connectivity server, I/O extension modules, and communication modules to create a controller tailored to its application. The different models for each are shown in the tables below.

Power Supply

A power supply module must be added after each HD15 cable (see Accessories below).

ECY-PS24	24VAC/VDC power supply module for the ECLYPSE Connected System Controller.
ECY-PS100-240	100 to 240VAC power supply module for the ECLYPSE Connected System Controller.

Control, Automation and Connectivity Servers

Connected System Controller for medium/large sized AHU and plant applications and small building server/controller applications.

Model	With Embedded ENVYSION	Application	Maximum Number of Points Supported	BACnet MS/TP to IP Routing Support – Maximum Number of BACnet MS/TP Devices	Maximum Number of Modbus Devices (RTU or TCP)
ECY-S1000-28		Small size equipment such as a large rooftop unit or a small AHU.	28	No[1]	3
ECY-S1000E-28	■				
ECY-S1000-28-MS			28	Yes[2]	3
ECY-S1000E-28-MS	■				
ECY-S1000-48		Medium size equipment such as an AHU or a small size plant room.	48	No[1]	10
ECY-S1000E-48	■				
ECY-S1000-48-MS			48	Yes[2]	10
ECY-S1000E-48-MS	■				
ECY-S1000		Large size equipment such as large plant rooms and large data centers.	320[4]	Yes[2]	96[3]
ECY-S1000E	■				

1. Upgrade and enable the functionality of your ECLYPSE controller's RS-485 ports with our capacity-based upgrade to ECYS1000-48MS.
2. Up to 50 BACnet MS/TP devices recommended on each RS-485 port.
3. Up to 32 Modbus RTU devices recommended on each RS-485 port. The maximum amount of Modbus TCP devices is limited to available system resources (too many devices can affect system performance).
4. The ECY-S1000 models support a maximum of 320 points OR up to a maximum of 20 IO modules.

I/O Modules Selection

	Inputs										Outputs									Basic Power Consumption[2], W
		Digital			Analog							Digital					Analog			
	Quantity	Contact	Counter	120Hz Pulse Counting	0 to 10VDC	0 to 5VDC	0 to 20mA	Resistance	Thermistor	18VDC Power Supply	Quantity	0-277VAC / 0-30VDC Form-C, 10A	24VAC Triac, 0.5 A	0 or 12VDC	PWM	Floating	0 to 10VDC[1]	0 to 20mA[1]	HOA	
ECY-8UI	8	■	■		■	■	■	■	■	■										0.94
ECY-16DI	16	■	■	■																0.94
ECY-6UO											6			■	■	■	■	UO1 UO2 UO3		0.94
ECY-6UO-HOA											6			■	■	■	■	UO1 UO2 UO3	■	0.94
ECY-8DOR											8	■								0.94
ECY-8DOR-HOA											8	■							■	0.94
ECY-4UI4UO	4	■	■		■	■	■	■	■	■	4			■	■	■	■	UO1 UO2 UO3		0.94
ECY-4UI4UO-HOA	4	■	■		■	■	■	■	■	■	4			■	■	■	■	UO1 UO2 UO3	■	0.94
ECY-8UI6UO	8	■	■		■	■	■	■	■	■	6			■	■	■	■	UO1 UO2 UO3		0.94
ECY-8UI6UO-HOA	8	■	■		■	■	■	■	■	■	6			■	■	■	■	UO1 UO2 UO3	■	0.94
ECY-8UI6DOT	8	■	■		■	■	■	■	■	■	6		■		■	■				0.94
ECY-8UI6DOT-HOA	8	■	■		■	■	■	■	■	■	6		■		■	■			■	0.94

1. 0 to 10VDC is available on UO1 to UO6. 0 to 20 mA is available on UO1, UO2, and UO3; this option is individually selected through an on-board DIP switch setting.
2. External loads excluded. See the ECLYPSE Selection Tool to calculate the number of Input/Output Extension Modules that can operate with a power supply.

Communication Modules Selection

Communications Module	Description
ECY-RS485	ECLYPSE Communication module with two RS-485 ports for Modbus RTU or BACnet MS/TP.
ECY-MBUS	ECLYPSE Communication module with one M-Bus port, supporting up to 20 M-Bus meters. Upgrade license for the ECY-MBUS communication module to support up to 60 M-Bus meters.

Accessories

ECLYPSE HD15 Cable	6ft (1.8m) cable for Connected System Controller multiple-row panel installations. An HD15 cable must always be followed by a power supply module. For more information, refer to the Hardware Installation Guide.
ECLYPSE Wi-Fi Adapter	Wi-Fi Adapter for ECLYPSE Connected Controllers.

Product Specifications

Power Supply (ECY-PS24)

Power Supply Input

Voltage Range	24VAC/DC; ±15%; Class 2
Power Consumption	60VA
Frequency Range	50 to 60Hz
Overcurrent Protection	Field replaceable fuse
Fuse Type	4A, fast-acting, 5 × 20mm (GMA-4A)

Power Supply Output

DC Voltage	18VDC regulated
Rated Current Range	0 to 1.6A
Rated Power	30W[1]

1. The total power consumption of all modules connected to the right of this power supply, and up to the next connected power supply, including any connected loads, must be less than this value. A separate transformer rated at 60VA minimum and 100VA maximum must be used for each ECY-PS24 power supply for it to operate at full capacity.

Hardware

Power Distribution Direction	Powered modules are connected to the right
Backplane Bus	Pass-through connection for data and control signals
Status Indicator	Green LED: power status

Mechanical

Dimensions (H × W × D)	4.74 × 2.85 × 2.31" (120.31 × 72.38 × 58.56mm)

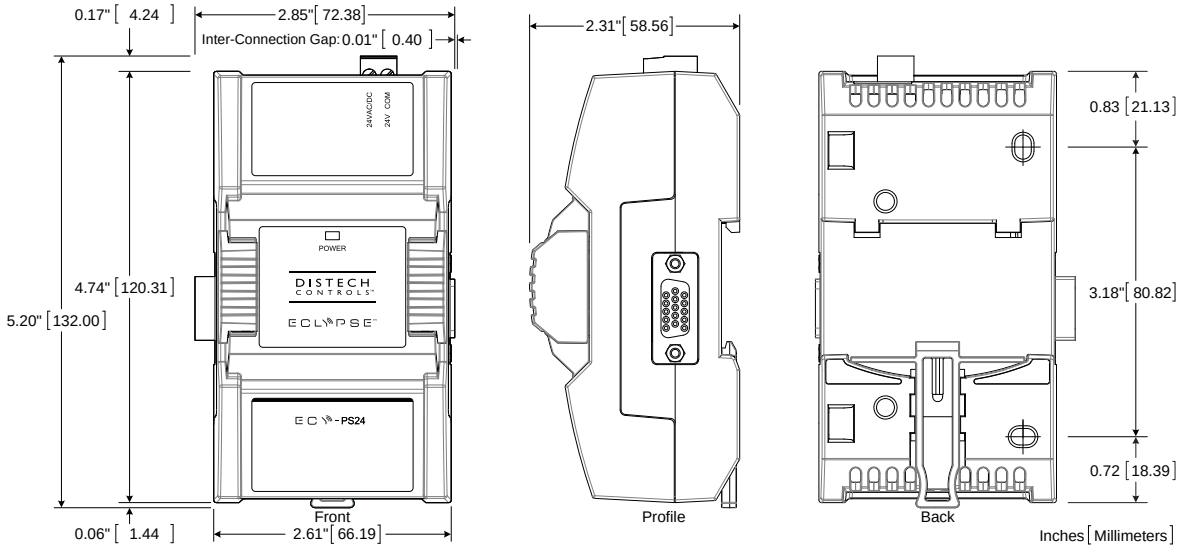

Shipping weight	0.75lbs (0.34kg)
Mounting	DIN rail or screw mounting
Enclosure Material[1]	FR/ABS
Enclosure Rating	Plastic housing, UL94-V0 flammability rating

Plenum rating per UL1995

1. All materials and manufacturing processes comply with the RoHS directive and are marked according to the Waste Electrical and Electronic Equipment (WEEE) directive

Environmental

Operating Temperature	32 to 122°F (0 to 50°C)
Storage Temperature	-22 to 158°F (-30 to 70°C)
Relative Humidity	0 to 90% non-condensing
Ingress Protection Rating	IP20
Nema Rating	1

Standards and Regulations

CE:

- Emission — EN61000-6-3: 2007; A1:2011; Generic standards for residential, commercial and light-industrial environments
- Immunity — EN61000-6-1: 2007; Generic standards for residential, commercial and light-industrial environments

FCC	This device complies with FCC rules part 15, subpart B, class B
UL Listed (CDN & US)	UL916 Energy management equipment

Power Supply (ECY-PS100-240)

Power Supply Input

Voltage Range	100 to 240 VAC Universal; +10%/-15%
Input Current	400mA typical
Frequency Range	50 to 60Hz
Standby Power consumption	<0.5W
Overcurrent Protection	Field replaceable fuse
Fuse Type	2.5A, Fast-acting, high-breaking, 250VAC, 5 × 20mm (TF2.5AH250V, IEC60127-2)

Power Supply Output

DC Voltage	18VDC regulated
Rated Current Range	0 to 2A
Rated Power	40W[1]

1. The total power consumption of all modules connected to the right of this power supply, and up to the next connected power supply, including any connected loads, must be less than this value.

Hardware

Power Distribution Direction	Powered modules are connected to the right
Backplane Bus	Pass-through connection for data and control signals
Status Indicator	Green LED: power status

Mechanical

Dimensions (H × W × D) — 4.74 × 4.08 × 2.31" (120.31 × 103.65 × 58.56mm)

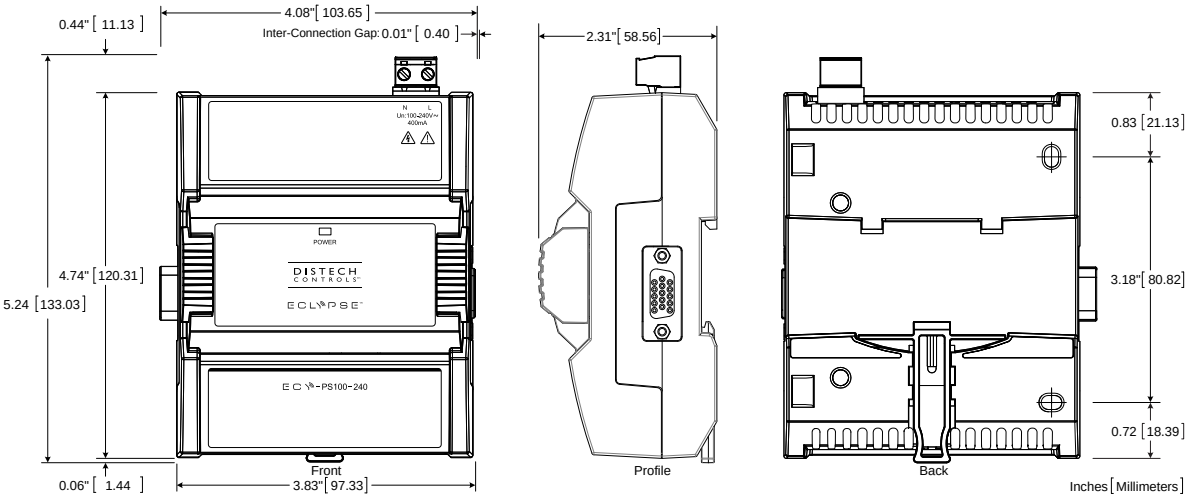

Shipping weight — 0.71lbs (0.32kg)

Mounting — DIN rail or screw mounting
Refer to Hardware Installation Guide for more information

Enclosure Material[1] — FR/ABS

Enclosure Rating — Plastic housing, UL94-5VB flammability rating

1. All materials and manufacturing processes comply with the RoHS directive and are marked according to the Waste Electrical and Electronic Equipment (WEEE) directive

Environmental

Operating Temperature — 32 to 122°F (0 to 50°C)

Storage Temperature — -22 to 158°F (-30 to 70°C)

Relative Humidity — 0 to 90% non-condensing

Altitude — <6562ft (2000m)

Pollution Degree — 2

Ingress Protection Rating — IP20

(must be mounted in a protective enclosure to conform with electrical installation standards)

Overvoltage — Category II - 2.5 kV

Electrical Protection — DC output is Separated Extra-Low Voltage (SELV); SELV is implemented through reinforced insulation

Standards and Regulations

CE:

- Electrical Safety — EN 60730-1 : 2011 - Automatic electrical controls for household and similar use - Part 1: General requirements
- Emission — EN61000-6-3: 2007; A1:2011; Generic standards for residential, commercial and light-industrial environments
- Immunity — EN61000-6-1: 2007; Generic standards for residential, commercial and light-industrial environments

UL Listed (CDN & US) — UL 61010-1 Safety Requirements For Electrical Equipment For Measurement, Control, And Laboratory Use - Part 1: General Requirements - Edition 2 - Revision Date 2008/10/28

FCC — This device complies with FCC rules part 15, subpart B, class B

Control, Automation and Connectivity Server (ECY-S1000)

Power Supply Input

Voltage	18VDC
Power Consumption	8.9W; external loads excluded

Communications

Ethernet Connection Speed	10/100 Mbps
☐ Addressing	IPv4 or Hostname
BACnet Profile	BACnet Building Controller (B-BC)), AMEV AS-A and AS-B (pending)
BACnet Listing	BTL, WSP B-BC
BACnet Interconnectivity	BBMD forwarding capabilities BACnet/IP to BACnet MS/TP routing
BACnet Transport Layer	IP & MS/TP (optional)
Web Server Protocol	HTML5
Web Server Application Interface	REST API

Supported BACnet MS/TP and Modbus RTU and TCP Connectivity:

☐ BACnet MS/TP or Modbus RTU	1 × RS-485 serial communications ports Each RS-485 port supports one communication protocol at a time
☐ RS-485 Wiring	1-pair + Common/shield
☐ RS-485 EOL Resistor	Built-in
☐ RS-485 Baud Rates	9600, 19 200, 38 400, or 76 800 bps
☐ RS-485 Addressing	Controller's Web Configuration Interface
☐ Modbus TCP	Devices must be on the same subnet

Supported Wireless Connectivity:

☐ Wireless Adapter	Optional, USB Port Connection
☐ Wi-Fi Communication Protocol	IEEE 802.11b/g/n and 802.11s
☐ Wi-Fi Network Types	Client, Access Point, Hotspot

Supported Smart Room Control Components[1]

Maximum number of supported devices per controller combined	12
☐ Allure EC-Smart-Vue Series	Up to 12[1]
☐ Allure EC-Smart-Comfort Series	Up to 6
☐ Allure EC-Smart-Air Series	Up to 6[1]
☐ EC-Multi Sensor	Up to 4
☐ ECx-Light-4 / ECx-Light-4D / ECx-Light-DALI	Up to 4
☐ ECx-Blind-4 / ECx-Blind-4LV	Up to 4

1. For more details about supported quantities, see the **ECLYPSE Selection Tool.xlsm** spreadsheet file available for download from SmartSource.
2. A controller can support a maximum of 2 Allure sensor models equipped with a CO_2 sensor. Any remaining connected sensors must be without a CO_2 sensor.

Hardware

Processor	Sitara ARM processor
CPU Speed	1GHz
Memory	4GB Non-volatile Flash (applications & storage) 512MB RAM

Real Time Clock (RTC) — Real Time Clock with rechargeable battery
Supports SNTP network time synchronization

RTC Battery — 20 hours charge time, 20 days discharge time
Up to 500 charge / discharge cycles

Cryptographic Module — FIPS 140-2 Level 1 Compliant

Communications Ports:

- Ethernet — 2 switched RJ-45 Ethernet ports
  - Supported Protocols — BACnet/IP, Modbus TCP, NTP, and REST
- USB Connections — 2 × USB 2.0 Ports
  1 × Micro-USB 2.0 Ports
- RS-485 Serial Communications — Screw terminals
  - Supported Protocols — BACnet MS/TP or Modbus RTU
- Subnet — RJ-45

Status Indicators — Green LED: Power status, Subnet TX, RS-485 TX, and Ethernet Traffic
Orange LED: Controller status, Subnet RX, RS-485 RX, and Ethernet Speed

Mechanical

Dimensions (H × W × D) — 4.74 × 3.57 × 2.31" (120.31 × 90.67 × 58.56mm)

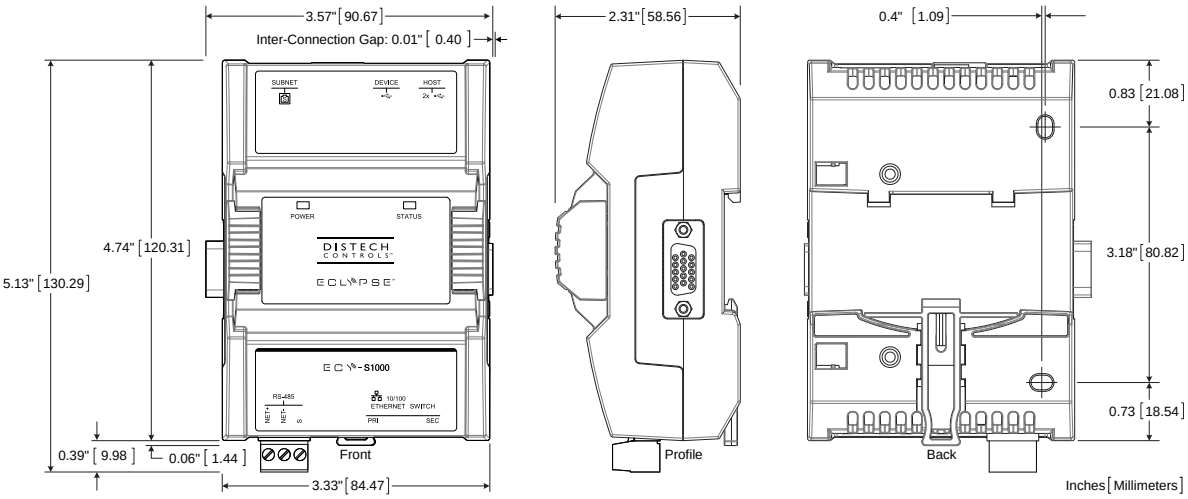

Shipping weight — 0.85lbs (0.39kg)

Mounting — DIN rail or screw mounting

Enclosure Material — FR/ABS

Enclosure Rating[1] — Plastic housing, UL94-V0 flammability rating
Plenum rating per UL1995

1. All materials and manufacturing processes comply with the RoHS directive and are marked according to the Waste Electrical and Electronic Equipment (WEEE) directive

Environmental

Operating Temperature — 32 to 122°F (0 to 50°C)

Storage Temperature — -22 to 158°F (-30 to 70°C)

Relative Humidity — 0 to 90% non-condensing

Ingress Protection Rating — IP20

Nema Rating — 1

Standards and Regulations

CE:

- Emission — EN61000-6-3: 2007+A1:2011; Generic standards for residential, commercial and light-industrial environments
- Immunity — EN61000-6-1: 2007; Generic standards for residential, commercial and light-industrial environments

FCC — This device complies with FCC rules part 15, subpart B, class B

UL Listed (CDN & US) — UL916 Energy management equipment

I/O Modules

Power Supply Input

Voltage — 18VDC

Power Consumption — Calculate power supply requirements with the ECLYPSE Selection Tool

Hardware

Status Indicator — Green LEDs: inputs and outputs

For ECY-8UI, ECY-16DI, ECY-6UO, ECY-6UO-HOA, ECY-4UI4UO, ECY-4UI4UO-HOA, ECY-8UI6UO, ECY-8UI6UO-HOA, ECY-8UI6DOT, & ECY-8UI6DOT-HOA Models:

Mechanical

Dimensions (H × W × D) — 4.74 × 3.20 × 2.31" (120.31 × 81.17 × 58.56mm)

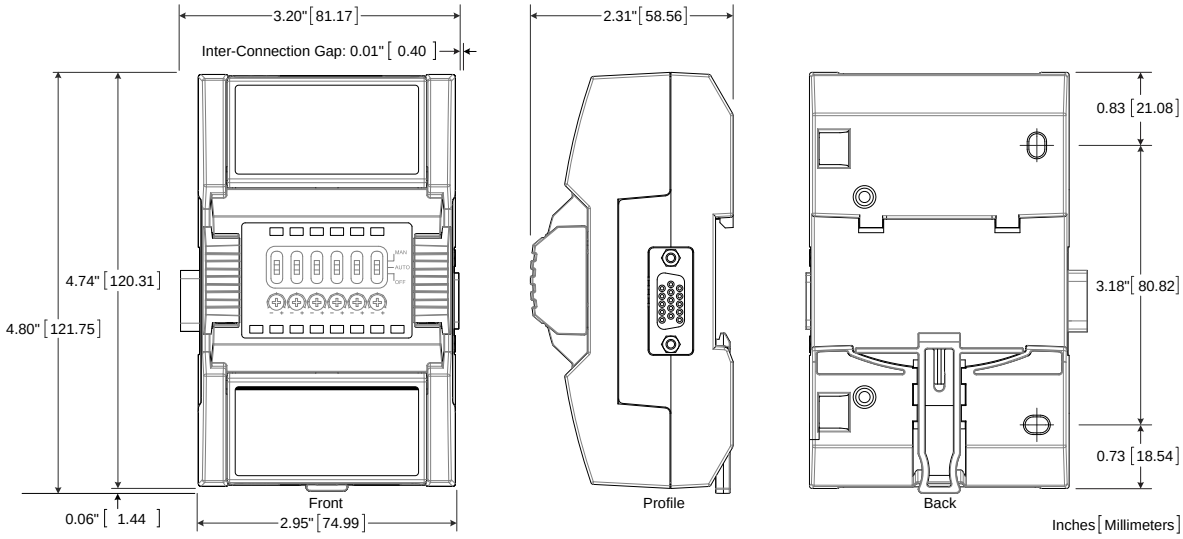

Shipping weight — 0.85lbs (0.39kg)

Mounting — DIN rail or screw mounting

Hot-swappable — Yes

Enclosure Material — FR/ABS

Enclosure Rating[1] — Plastic housing, UL94-V0 flammability rating; Plenum rating per UL1995

1. All materials and manufacturing processes comply with the RoHS directive and are marked according to the Waste Electrical and Electronic Equipment (WEEE) directive

Environmental

Operating Temperature	32 to 122°F (0 to 50°C)
Storage Temperature	-22 to 158°F (-30 to 70°C)
Relative Humidity	0 to 90% non-condensing
Ingress Protection Rating	IP20
Nema Rating	1

Standards and Regulations

CE:

- Emission — EN61000-6-3: 2007; A1:2011; Generic standards for residential, commercial and light-industrial environments
- Immunity — EN61000-6-1: 2007; Generic standards for residential, commercial and light-industrial environments

FCC	This device complies with FCC rules part 15, subpart B, class B
UL Listed (CDN & US)	UL916 Energy management equipment

I/O Modules - Universal Inputs (UI)

General

Input Type	Universal; software configurable
Current Input Option Selection	DIP switch
Input Resolution	16-bit analog to digital converter
Power Supply Output	18VDC; 20mA maximum per 0 to 20 mA input

Contact

Type	Dry contact

Counter

Type	Dry contact
Maximum Frequency	1Hz maximum,
Minimum Duty Cycle	500milliseconds On / 500milliseconds Off

0 to 10VDC

Range	0 to 10VDC (40kΩ input impedance)

0 to 5VDC

Range	0 to 5VDC (high input impedance)

0 to 20mA

Range	0 to 20mA
	249Ω DIP-switch configurable internal resistor

Resistance/Thermistor

Range	0 to 350 KΩ
Supported Thermistor Types	Any that operate in this range

Pre-configured Temperature Sensor Types:

☐ Thermistor	10KΩ Type 2, 3 (10KΩ @ 77ºF; 25ºC)
☐ Platinum	Pt1000 (1KΩ @ 32ºF; 0ºC)
☐ Nickel	RTD Ni1000 (1KΩ @ 32ºF; 0ºC)
	RTD Ni1000 (1KΩ @ 69.8ºF; 21ºC)

I/O Modules - Digital Inputs (DI)

General

Input Type	Dry contact or Open-Collector
Low Threshold	< 2.5V
High Threshold	> 3.0V

Pulse/Counter

Pulse Input	S0 output compatible
Maximum Frequency	120Hz
Minimum Duty Cycle	4.167milliseconds On / 4.167milliseconds Off

I/O Modules - Universal Outputs (UO)

General

Output Type	Universal; software configurable
Output Resolution	10-bit digital to analog Converter
Output Protection	Built-in snubbing diode to protect against back-EMF, for example when used with a 12VDC relay
Load Resistance	Minimum 200Ω for 0 to 10VDC and 0 to 12VDC outputs Maximum 500Ω for 0 to 20mA output
Auto-reset Fuse	60mA @ 140ºF; 60ºC

0 or 12VDC (On/Off)

Range	0 or 12VDC

PWM

Range	Adjustable period from 2 to 65seconds

Floating

Minimum Pulse On/Off Time	500milliseconds
Drive Time Period	Adjustable

0 to 10VDC

Range	0 to 10VDC linear

0 to 20mA

Range	0 to 20mA
Current Source	20mA maximum per 0 to 20 mA output
Ports UO1, UO2, and UO3 only	DIP switch

HOA

Hand-Off-Auto switch	When equipped

Supervision allows control logic to read the current HOA switch and potentiometer settings

Threshold — Configurable

Potentiometer Voltage Range — 0 to 12VDC

I/O Modules - Digital Output (DOT)

General

Output Type — 24VAC Triac; software configurable

Maximum Current — 0.5A continuous

1A @ 15% duty cycle for a 10 minute period

Power Source — External power supply

0 or 24VAC (On/Off)

Range — 0 or 24VAC

PWM

Range — Adjustable period from 2 to 65seconds

Floating

Minimum Pulse On/Off Time — 500milliseconds

Drive Time Period — Adjustable

HOA

Hand-Off-Auto switch — When equipped

Supervision allows control logic to read the current HOA switch setting

I/O Modules - Digital Output (DOR)

For ECY-8DOR & ECY-8DOR-HOA Models:

General

Output Type — Relay contact

Relay Type — Form C

Power Source — Dry contact (external power supply)

Operating Voltage — 0 to 277VAC or 0-30VDC ±10%, see HIG for mounting specifications

Maximum Current

- Resistive Load — 10A
- Inductive Load — 6A
- Motor Load — 3A

Protection — Outputs must be protected with max 10 A external circuit breaker

Digital

Range — On/Off

HOA

Hand-Off-Auto switch — When equipped

Supervision allows control logic to read the current HOA switch setting

Mechanical

Dimensions (H × W × D) — 4.74 × 5.15 × 2.31" (120.31 × 130.07 × 58.56mm)

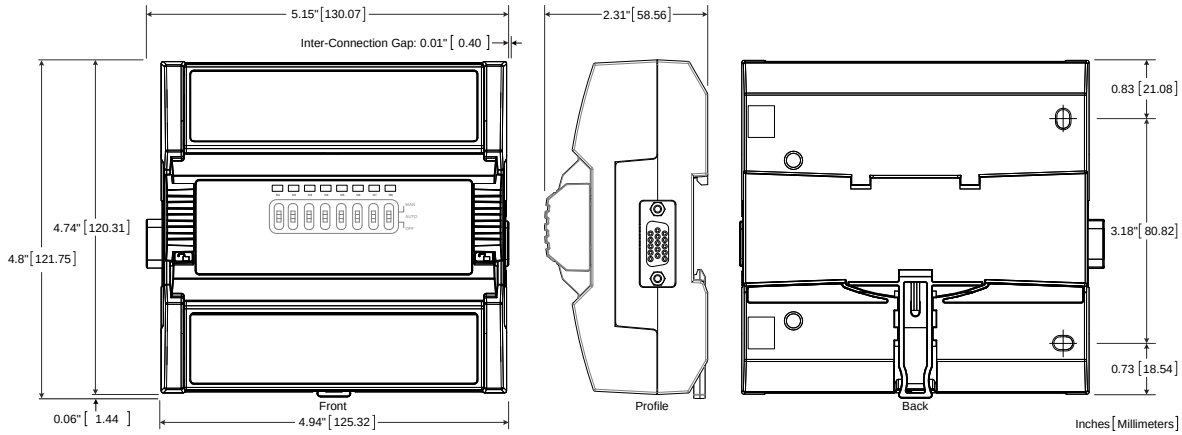

Shipping weight — 0.75lbs (0.34kg)

Mounting — DIN rail or screw mounting

Hot-swappable — Yes (once high voltages have been removed)

Enclosure Material — FR/ABS

Enclosure Rating[1] — Plastic housing, UL94-5VB flammability rating

1. All materials and manufacturing processes comply with the RoHS directive and are marked according to the Waste Electrical and Electronic Equipment (WEEE) directive

Environmental

Operating Temperature — 32 to 122°F (0 to 50°C)

Storage Temperature — -22 to 158°F (-30 to 70°C)

Relative Humidity — 0 to 90% non-condensing

Altitude — <6562ft (2000m)

Pollution Degree — 2

Ingress Protection Rating — IP20

(must be mounted in a protective enclosure to conform with electrical installation standards)

Overvoltage — Category II - 2.5 kV

Standards and Regulations

CE:

- Electrical Safety — EN 60730-1 : 2011 - Automatic electrical controls for household and similar use - Part 1: General requirements
- Emission — EN61000-6-3: 2007; A1:2011; Generic standards for residential, commercial and light-industrial environments
- Immunity — EN61000-6-1: 2007; Generic standards for residential, commercial and light-industrial environments

UL Listed (CDN & US) — UL 61010-1 Safety Requirements For Electrical Equipment For Measurement, Control, And Laboratory Use - Part 1: General Requirements - Edition 2 - Revision Date 2008/10/28

FCC — This device complies with FCC rules part 15, subpart B, class B

Specifications subject to change without notice.
ECLYPSE, Distech Controls, the Distech Controls logo, EC-Net, Allure, and Allure UNITOUCH are trademarks of Distech Controls Inc. BACnet is a registered trademark of ASHRAE; BTL is a registered trademark of the BACnet Manufacturers Association. All other trademarks are property of their respective owner. The Bluetooth® word mark and logos are registered trademarks owned by Bluetooth SIG, Inc. and any use of such marks is under license. All other trademarks are property of their respective owners.
©, Distech Controls Inc., 2015 - 2018. All rights reserved.

ECLYPSE™ Connected Equipment Controller

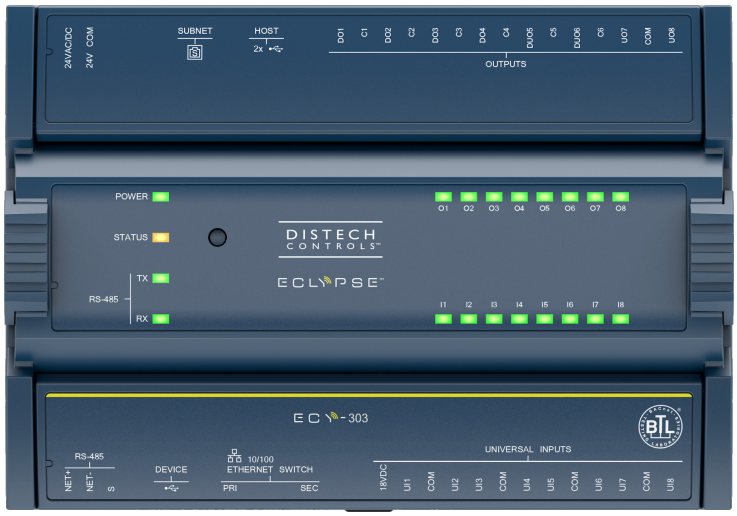

ECLYPSE™

Overview

The ECLYPSE Connected Equipment Controller (ECY-303) is designed to satisfy the needs of a wide range of HVAC applications such as small and medium terminal applications. It integrates a control, automation and connectivity server, power supply, and I/O in one convenient package. It supports BACnet/IP communications and is a listed BACnet Building Controller (B-BC). In addition, the ECY-303-M3 model supports Modbus to connect to meters, Variable Frequency Drives, etc.

This programmable controller comes with an embedded web server that enables web-based application configuration and a visualization interface. It also features embedded scheduling, alarming, and logging. Control logic and graphic user interface can be customized as required for the application.

Applications

The ECY-303 meets zone application requirements, including:

- Rooftop unit, fan coil unit, small air handling unit, heat pump, and chilled beam
- Lighting, power monitoring, and other applications.

Features & Benefits

Connectivity

The different types of connections supported by the ECY-303 are as follows:

IP wired connection

Internal switch with two Ethernet ports allows the controllers to be wired in a star or daisy-chain topology. With a daisy-chain topology:

- Fewer wire runs to a centralized switch are required, thereby achieving installation and cost reduction.
- A laptop can be connected to the second Ethernet port for direct programming, configuration, and commissioning using EC-*gfx*Program or ENVYSION.

IP wireless (Wi-Fi) connection

- Wi-Fi Client - Connection to the building's existing Wi-Fi network or to another controller's Wi-Fi Hotspot or Access Point.
- Wi-Fi Access Point - extending the building's wired IP network to your Wi-Fi Client devices.

- Wi-Fi Hotspot - your own wireless area network, for wireless communication between the controllers, or with a mobile device or laptop for configuration, commissioning and servicing.

Both IP wired and wireless (Wi-Fi) connection

The availability of both Ethernet ports and USB ports for the Wi-Fi Adapter, allows for simultaneous wired IP and Wi-Fi communication on the same controller, which means you can choose and combine these connection methods. For example, Wi-Fi can be used between two controllers to jump a large atrium.

Connect from anywhere

Control technicians, facility managers, occupants, and others can easily connect to the system, on-site or off-site, using the different available tools:

- ENVYSION to create and view the graphical interface
- EC-*gfx*Program to create custom control sequences
- *my*DC Control to view, edit, and configure system operating parameters

IP Communication

- Increased speed and improved handling of numerous trend logs that enable applications, such as advanced analytics that require a large amount of data.
- Experience faster response and save time when programming, configuring, creating and viewing graphics, and upgrading your system.
- Control technicians can connect the ECLYPSE Wi-Fi Adapter to the ECY-303 thereby creating a Wi-Fi Hotspot network. The control technician can then connect wirelessly to the system using a mobile device or laptop, for faster, easier system configuration, programming, commissioning, and servicing.
- Hostname management allows the controller to be addressed by a nickname to facilitate network management.

Open to Web Services

With the RESTful API, the ECY-303's data can be accessed from different applications, such as energy dashboards, analytics tools, and mobile applications. The RESTful API documentation explains the implementation protocol for this interface.

Preloaded Application and Graphics

The ECY-303 is a plug and play device that saves time and money since no programming or graphic design is needed as it comes with ENVYSION™ Viewer and the associated preloaded rooftop unit applications and graphics pre-installed.

Also, no additional tools are required; only a web-browser is needed when you are using the pre-loaded application through ENVYSION. If the pre-loaded application does not meet the application requirements, you can program it using EC-*gfx*Program.

HTML5 Visual Interface

The ECY-303 comes embedded with ENVYSION Viewer and xpressENVYSION.

ENVYSION Viewer – Web-based graphical user interface

The embedded ENVYSION viewer provides fast loading of visual applications through native web pages with absolutely no browser plug-ins. Host and view preloaded graphics, and access schedules, alarms, and trend logs directly from your ECY-303.

Programmability

Supports Distech Controls' EC-*gfx*Program, which makes Building Automation System (BAS) programming effortless, by allowing you to visually assemble building blocks to create a custom control sequence for any HVAC , lighting, or building automation application.

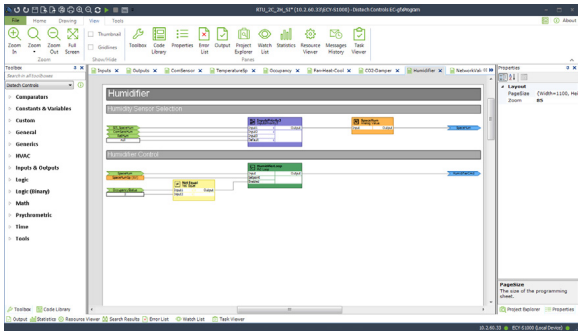

Batch EC-*gfx*Program Projects and Firmware Download

EC-*gfx*Program projects can be downloaded in batch to multiple controllers, for greater time savings. Batch firmware update can also be performed on multiple controllers.

Simplified Network Commissioning

The Xpress*Network* Utility saves you time and expense by giving you increased control over multiple ECLYPSE controllers through device discovery and batch operations such as configuring, programming, and updating multiple ECLYPSE controllers on the network.

In addition, with the embedded step by step Commissioning Wizard, all configuration operations can be setup and applied in one go.

Increase productivity using the xpress*Network* Companion mobile app, making it easier to identify and locate a controller on the network. Use the QR Code marked on ECLYPSE controllers to easily collect key controller data and to facilitate its network integration with xpress*Network* Utility.

Scalable and Modular

An ECY-MBUS communication module can be connected via USB to add one M-Bus port for meter integration, thus eliminating the need for a third-party gateway (from M-Bus to BACnet/IP).

BACnet/IP Device

The ECY-303 is BTL-listed as a BACnet Building Controller (B-BC) and is certified WSP B-BC (Europe) and AMEV AS-A & AS-B (German-speaking countries). It supports BACnet/IP for faster communication in comparison to the traditional twisted pair communication bus.

Multi-Protocol Support

The ECY-303 optionally supports both Modbus TCP devices by connecting them to the controller's IP network and Modbus RTU devices by connecting them directly to the controller's RS-485 port.

Controllers with the Modbus communications option can integrate a wide variety of Modbus devices such as power and water meters, Variable Frequency Drives, air flow sensors, and more, without the need for additional hardware such as a gateway.

FIPS 140-2 Level 1 Compliant

FIPS 140-2 Level 1 compliance provides an enhanced level of security to protect data the controller is collecting and sharing making it suitable for use in the most sensitive environments.

Weather Forecast

The weather forecast is directly available from the internet to be shown on a connected ECx-Display or to be used by the controller's code.

Smart Room Control Support

The Smart Room Control solution is an end-to-end system for the control of HVAC equipment, lighting, and shades/sunblinds, achieving the highest levels of comfort for occupants while cutting costs from installation time and wiring/ material requirements to energy consumption. This solution combines:

- Lighting and shade/sunblind expansion modules to control lights (on/off or dimming) and shades/sunblinds (up/down and angle rotation).
- Multi-sensor combining motion and luminosity (Lux) sensors and an Infrared receiver that works with a convenient remote control.
- The ECLYPSE platform is compatible with Distech Controls line of *Bluetooth*® low energy technology enabled devices (Allure UNITOUCH™ and EC-Multi-Sensor-BLE) and mobile application providing state-of-the-art occupant management.
- Allure™ Series Communicating room sensors for increased occupant comfort settings using integrated sensors for temperature, humidity, CO_2, and motion.

Allure™ Series Communicating Sensor Support

These controllers work with a wide range of sensors, such as the Allure Series Communicating Sensors that are designed to provide intelligent sensing and control devices for increased user experience and energy efficiency.

- Allure EC-Smart-Vue
- Allure EC-Smart-Comfort
- Allure EC-Smart-Air
- Allure UNITOUCH

Mobility

The controller can be remotely accessed to program, configure, or maintain the installation thus reducing costs associated with on-site visits. Through a mobile device or PC, a range of tasks can be performed using the following free-to-use tools and interfaces:

- ENVYSION web-based graphic design and visualization interface
- EC-*gfx*Program graphical programming interface
- *my*DC Control mobile application

Software Configurable Outputs

For greater flexibility, two of the controller's outputs can be software configured to function either as a universal output (0 or 12VDC, PWM, Floating, 0 to 10VDC, 0 to 20mA) or as a digital 24VAC triac output.

I/O Status LEDs

The status LEDs allows the user to confirm the status of the inputs/outputs and facilitate commissioning and troubleshooting.

Color-Coded, Rising Cage Terminals

Terminal blocks are uniquely identified and color-coded for clarity and to prevent wiring mistakes. The rising cage clamp terminal block connectors offer a more robust and secure wire connection, designed to withstand activity and vibrations.

Robust Protection

The I/Os are protected against mis-wiring and faults to prevent damage caused by incorrect wiring or other mishaps.

Alarms, Trend Log, Schedule Support

Embedded alarms, trend log and schedule support allows for fully distributed data and logic providing a more robust system. Embedded trend logs simplify system troubleshooting when compared to a centralized system.

Email Notifications Service

Technicians & facility managers can receive automatic email notifications for system status and alarms to ensure faster system servicing and response time. Email notification text can be customized to provide pertinent information about the issue at hand.

Model Selection

Connected Equipment Controller

Model	ECY-303 (SI)	ECY-303 (IMP)	ECY-303-M3 (SI)	ECY-303-M3 (IMP)
Points	16-Point	16-Point	16-Point	16-Point
Universal hardware inputs	8	8	8	8
18 Vdc power supply	■	■	■	■
Universal output	2	2	2	2
Digital (triac) outputs	4	4	4	4
Digital / Universal outputs	2	2	2	2
Modbus TCP & RTU Devices Supported	0	0	3	3
ENVYSION Viewer	■	■	■	■
Preloaded Apps in SI (Metric) units	■		■	
Preloaded Apps in Imperial (US) units		■		■

Accessories

ECLYPSE Wi-Fi Adapter	Wi-Fi Adapter for ECLYPSE Connected Controllers.

Product Specifications

Power Supply Input

Voltage Range	24VAC; ±15%; Class 2
Power Consumption:	
☐ Nominal	18VA; all external loads excluded, no USB peripherals
☐ Full Load	36VA; external 24VAC loads excluded
Frequency Range	50 to 60Hz
Overcurrent Protection	Field replaceable fuse
Fuse Type	2A, fast-acting, 5 × 20mm (GMA-2A)

Communications

Ethernet Connection Speed	10/100 Mbps
☐ Addressing	IPv4 or Hostname
BACnet Profile	BACnet Building Controller (B-BC)), AMEV AS-A and AS-B (pending)
BACnet Listing	BTL, WSP B-BC
BACnet Interconnectivity	BBMD forwarding capabilities
BACnet Transport Layer	IP
Web Server Protocol	HTML5
Web Server Application Interface	REST API

Supported Wireless Connectivity:

☐ Wireless Adapter	Optional, USB Port Connection
☐ Wi-Fi Communication Protocol	IEEE 802.11b/g/n and 802.11s
☐ Wi-Fi Network Types	Client, Access Point, Hotspot

Subnetwork

Communication	RS-485
Cable	Cat 5e, 8 conductor twisted pair
Connector	RJ-45
Connection Topology	Daisy-chain
Maximum number of standard devices supported per controller combined	4[1]
☐ Allure EC-Smart-Vue Series[2]	
☐ Allure EC-Smart-Air Series[2]	
☐ Allure EC-Smart-Comfort Series	
☐ EC-Multi-Sensor Series	
Maximum number of expansion modules supported per controller combined	4[1]
☐ ECx-Light-4 / ECx-Light-4D / ECx-Light-4DALI	
☐ ECx-Blind-4 / ECx-Blind-4LV	
Maximum number of Bluetooth low energy devices per controller combined	4
☐ Allure UNITOUCH	2
☐ EC-Multi-Sensor-BLE	4

A mixed architecture with standard room devices and Bluetooth low energy enabled devices is not recommended.

1. For more information regarding supported quantities, see the ECLYPSE User Guide available on SmartSource.
2. A controller can support a maximum of two Allure Series Communicating Sensor models equipped with a CO_2 sensor. The remaining connected Allure Series Communicating Sensor models must be without a CO_2 sensor.

Hardware

Processor — Sitara ARM processor

CPU Speed — 600MHz

Memory — 4GB Non-volatile Flash (applications & storage)
512MB RAM

Real Time Clock (RTC) — Real Time Clock with rechargeable battery
Supports SNTP network time synchronization

RTC Battery — 20 hours charge time, 20 days discharge time
Up to 500 charge / discharge cycles

Cryptographic Module — FIPS 140-2 Level 1 Compliant

Communications Ports:

- Ethernet — 2 switched RJ-45 Ethernet ports
  Integrated fail-safe for daisy-chaining — In case of power failure to one of the controllers, communication data is still relayed to the following controller on the daisy-chain
- Supported Protocols — BACnet/IP, Modbus TCP, NTP, and REST
- USB Connections — 2 × USB 2.0 Ports
  1 × Micro-USB 2.0 Port
- RS-485 Serial Communications — Screw terminals
- Subnet — RJ-45

Status Indicators — Green LED: Power status, Subnet TX, and Ethernet Traffic
Orange LED: Controller status, Subnet RX, and Ethernet Speed

Mechanical

Dimensions (H × W × D) — 4.74 × 6.78 × 2.31" (120.31 × 172.10 × 58.56 mm)

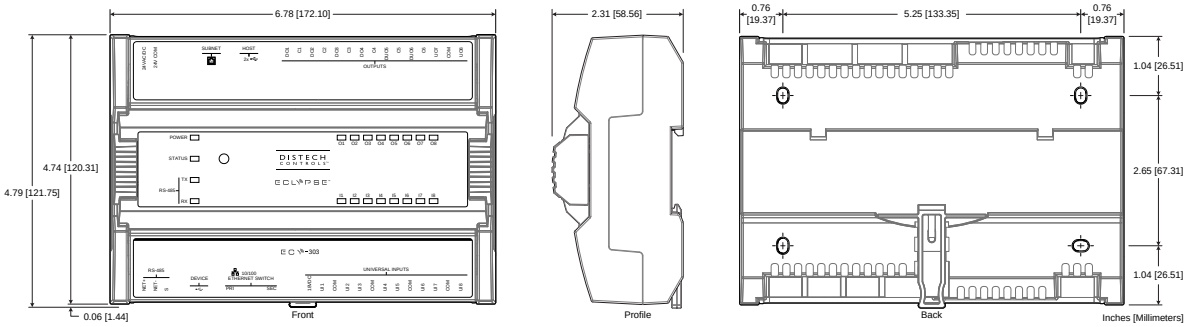

Shipping Weight — 1.20lbs (0.55 kg)

Enclosure Material[1] — FR/ABS

Enclosure Rating — Plastic housing, UL94-5VB flammability rating
Plenum rating per UL1995

1. All materials and manufacturing processes comply with the RoHS directive and are marked according to the Waste Electrical and Electronic Equipment (WEEE) directive

Environmental

Operating Temperature — -40 to 122°F (-40 to 50°C)

Storage Temperature — -40 to 158°F (-40 to 70°C)

Relative Humidity — 0 to 90% non-condensing

Ingress Protection Rating — IP20 in accordance with IEC 60549

Nema Rating — 1

Standards and Regulations (Pending)

CE:

- Emission — EN61000-6-3: 2007+A1:2011; Generic standards for residential, commercial and light-industrial environments
- Immunity — EN61000-6-1: 2007; Generic standards for residential, commercial and light-industrial environments

FCC — This device complies with FCC rules part 15, subpart B, class B

UL Listed (CDN & US) — UL916 Energy management equipment

Specifications - Universal Inputs (UI)

General

Input Type	Universal; software configurable
Input Resolution	16-bit analog to digital converter
Power Supply Output	18-20VDC; 80mA maximum
Protection	Auto-reset fuse for 24VAC protection

Contact

Type	Dry contact

Counter

Type	Dry contact
Maximum Frequency	1Hz maximum,
Minimum Duty Cycle	500milliseconds On / 500milliseconds Off

0 to 10VDC

Range	0 to 10VDC (40kΩ input impedance)

0 to 5VDC

Range	0 to 5VDC (high input impedance)

0 to 20mA

Range	0 to 20mA
	249Ω external resistor wired in parallel

Resistance/Thermistor

Range	0 to 350 KΩ
Supported Thermistor Types	Any that operate in this range

Pre-configured Temperature Sensor Types:

- Thermistor — 10KΩ Type 2, 3 (10KΩ @ 77ºF; 25ºC)
- Platinum — Pt1000 (1KΩ @ 32ºF; 0ºC)
- Nickel — RTD Ni1000 (1KΩ @ 32ºF; 0ºC)

RTD Ni1000 (1KΩ @ 69.8ºF; 21ºC)

Specifications - Universal Outputs (UO)

General

Output Type	Universal; software configurable
Output Resolution	10-bit digital to analog Converter
Output Protection	Built-in snubbing diode to protect against back-EMF, for example when used with a 12VDC relay Output is internally protected against short circuits
Auto-reset fuse	Provides protection from accidental 24VAC connection

0 or 12VDC (On/Off)

Range	0 or 12VDC
Source Current	Maximum 20 mA at 12VDC (minimum resistance 600Ω)

PWM

Range	Adjustable period from 2 to 65seconds
Thermal Actuator Management	Adjustable warm up and cool down time

Floating

Minimum Pulse On/Off Time	500milliseconds
Drive Time Period	Adjustable

0 to 10VDC

Source:

- Voltage Range — 0 to 10VDC linear
- Source Current — Maximum 20 mA at 10VDC (minimum resistance 600Ω)

Sink:

- Voltage Range — 0 to 10VDC linear
- Sink Current — Maximum 2.5 mA at 1VDC (minimum resistance 4kΩ)

Specifications - Digital Output (DOT)

General

Output Type — 24VAC Triac; software configurable

Maximum Current — 0.5A continuous

1A @ 15% duty cycle for a 10 minute period

Power Source — External power supply

0 or 24VAC (On/Off)

Range — 0 or 24VAC

PWM

Range — Adjustable period from 2 to 65seconds

Floating

Minimum Pulse On/Off Time — 500milliseconds

Drive Time Period — Adjustable

Specifications – Digital-Universal Outputs (DUO)

General

Output Type — Universal or digital triac;

Mode — Software configurable

Specifications:

- Universal Output Mode — See Universal Output (UO)
- Digital Output Mode — See Digital Output (DOT)

Specifications subject to change without notice.
ECLYPSE, Distech Controls, the Distech Controls logo, EC-Net, Allure, and Allure UNITOUCH are trademarks of Distech Controls Inc. BACnet is a registered trademark of ASHRAE; BTL is a registered trademark of the BACnet Manufacturers Association. The Bluetooth® word mark and logos are registered trademarks owned by Bluetooth SIG, Inc. and any use of such marks is under license. All other trademarks are property of their respective owners.
©, Distech Controls Inc., 2016 -2018. All rights reserved.
Global Head Office - 4205 place de Java, Brossard, QC, Canada, J4Y 0C4 - EU Head Office - ZAC de Sacuny, 558 avenue Marcel Mérieux, 69530 Brignais, France

The *NEW* Series 3000 Cooling Tower

The NEW Series 3000 Cooling Towers

The NEW Series 3000 Cooling Tower continues its industry leading tradition. With expanded selection flexibility and a capacity increase of up to 16%, the Series 3000 Cooling Tower provides an extremely efficient solution for all your application needs.

Reduced Energy Consumption

- ✓ Most efficient cooling tower in the industry
- ✓ Up to a 16% increase in capacity
- ✓ Exceeds ASHRAE 90.1-2013 efficiency requirements

400-Ton Example:	Series 3000	Competition	Competition
Fan HP	20	30	40
Footprint (L x W x H)	8.5' x 18' x 12'	8.5' x 18' x 12'	8.5' x 18' x 12'
Nominal Tons	400	386	423

400-Ton Example: Annual Operating Cost for a 20, 30, & 40 HP

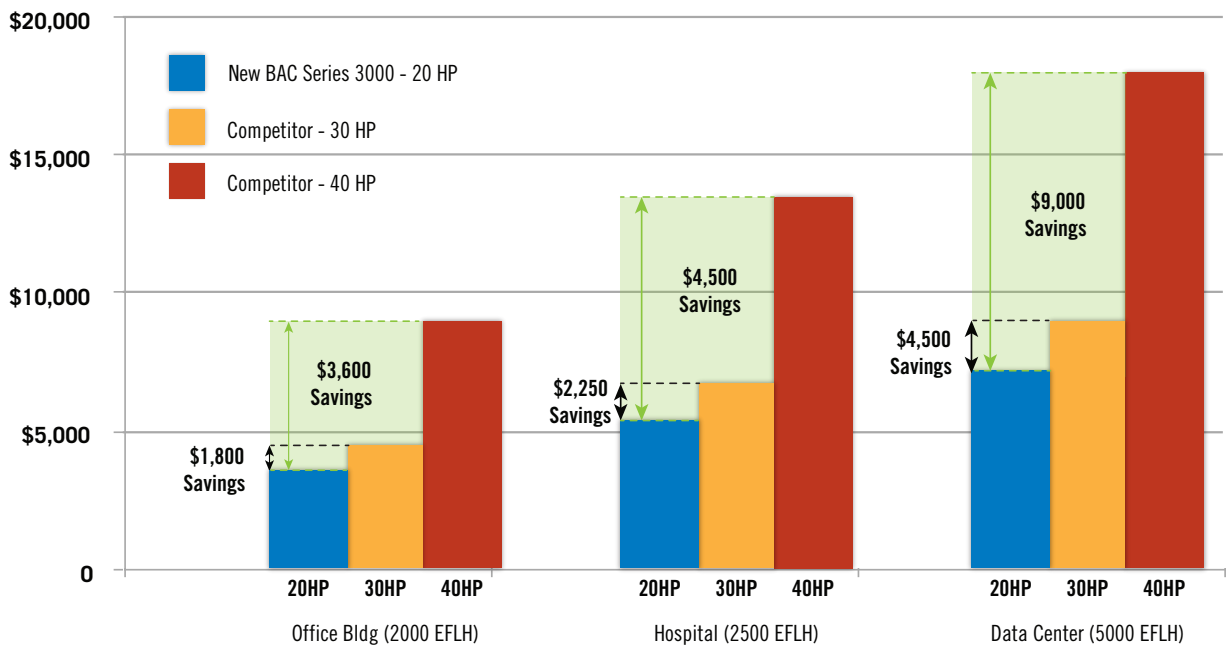

Energy Cost Savings Based on a 400-Ton System ($0.12 kWH)

Reliable Year-Round Operation

- ✓ Superior winter operating performance
- ✓ BALTIDRIVE® POWER TRAIN Fan System
- ✓ Rigid frame construction
- ✓ Meets wind and seismic requirements of the International Building Code (IBC)

New Series 3000 Cooling Tower

More Selection Flexibility

- ✓ 31 new models
- ✓ 3 new box sizes
- ✓ 69 XE-Series 3000 Cooling Tower models are available in a full array of box sizes

Enhanced Payback Analysis

- ✓ Provides alternative selections based on energy savings and minimum payback
- ✓ User-defined life-cycle cost inputs
- ✓ XE-Series models featured in selection program

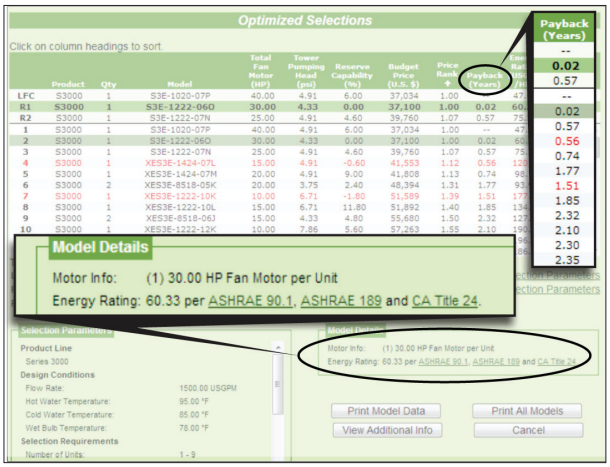

Enhanced Product Selection Software

Easiest to Maintain

- ✓ Direct access to:
  - Cold water basin
  - Hot water basin
  - Drive system
- ✓ Patented hygienic cold water basin
- ✓ Factory assembled access options available for ease of maintenance

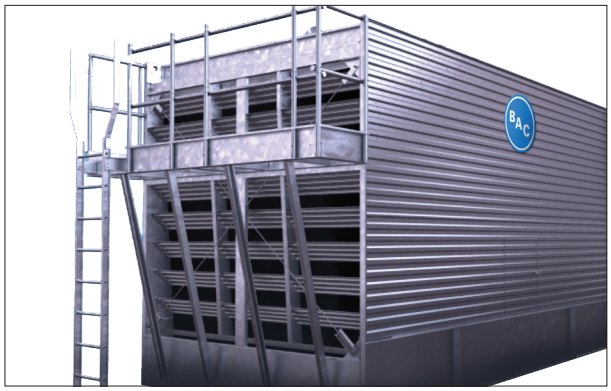

Factory Pre-Assembled Platforms

BALTIMORE
AIRCOIL COMPANY

COOLING TOWERS

CLOSED CIRCUIT COOLING TOWERS

ICE THERMAL STORAGE

EVAPORATIVE CONDENSERS

HYBRID PRODUCTS

PARTS & SERVICES

www.BaltimoreAircoil.com

7600 Dorsey Run Road, Jessup, MD 20794 › Telephone: (410) 799-6200 › Fax: (410) 799-6416
© 2013 Baltimore Aircoil Company • S248/1-L

YORK®

Flexibility Without Compromise.

High-Performance Indoor and Outdoor Semi-Custom Air Handling Units

The power behind **your mission**

Johnson Controls

From healthcare to higher education, from North Dakota blizzards to Arizona heat waves – every project is different. Not every project requires the cost or complexity of a custom air handling unit. With YORK® Solution™ Indoor and Outdoor semi-custom air handling units, you get much of the selection flexibility and performance of a custom-built unit with the reduced lead times, easy specification and cost-savings typically found in cataloged air handlers.

Incomparable Flexibility

The variable aspect ratio design of YORK® Solution™ semi-custom air handlers allows for nearly endless configurations that are scalable in 3″ height and width increments – from 27″ x 27″ up to 144″ x 288″ (144″ x 144″ for Solution™ Outdoor). This highly adaptable design optimizes the system footprint, freeing up valuable space within the facility. The flexible nature of Solution™ doesn't end with cabinet sizing. YORK® Solution™ is available in airflow capacities from 2,000 to 120,000 CFM (@500 FPM coil face velocity). And with our optimized wrap-around heat exchanger (WAHX) system, our air handlers offer factory-integrated dehumidification enhancement in a compact footprint.

Unmatched Efficiency

By incorporating a series of extensively researched, efficiency-enhancing technologies, YORK® Solution™ semi-custom units punch above their class in any size or configuration:

- Air-side economizer systems using our *Ruskin*® brand dampers provide airflow control to bring in cool, outside air ahead of systems that require more energy
- Multiple brands and types of energy recovery wheels utilize the highest efficiency technologies available for the transfer of energy when free-cooling from water-side or air-side economizer systems are not feasible
- Direct-drive, variable-speed fan systems optimize wire-to-air efficiency
- Factory tested for guaranteed low air leakage
- YORK® coils are engineered and manufactured to meet your specifications and to connect seamlessly with YORK® chillers and direct expansion (DX) condensing units

Extensive, ongoing research from our world-class YORK® air handling performance laboratory at the Johnson Controls Advanced Development Engineering Center (JADEC) provides unmatched airflow, sound, vibration and power validation for efficient performance in every application.

Industry-leading Innovations

YORK® is the market-leader in fan performance and acoustic testing, and is home to the largest air handling performance test facility in the world. It should come as no surprise that Solution™ semi-custom units are packed with a combination of innovative features only YORK® can deliver:

- Standard Building Information Models (BIM) to aid in design and engineering
- Premium, permanent-magnet EC motors are a standard offering that allow our systems to be more energy-efficient, require less effort to install and commission and reduce the overall equipment footprint
- An array of AMCA-certified fan options are available to customize Solution™ units for performance, efficiency, acoustics, size, serviceability and redundancy
- Service-friendly features including slide-out coil stacking racks with removable coil-pull wall panels, raised coil supports for easy drain pan access, motor removal rails, inward-swinging doors and inside door handles
- Exclusive, integrated Metasys building management technologies provide control over how and when systems are running, including scheduling, occupancy detection and trend summaries
- Proprietary acoustical attenuation technologies including Acoustiweir™ and High Performance Silencer minimize sound in critical frequencies while enabling a more compact air handling system footprint
- Advanced, ETL-listed, factory-integrated electrical features include:
  - Interior LED lighting
  - Single or redundant motor controls
  - Individual motor disconnects for multiple fans
  - Single-point power
  - DDC controls
- Two-inch double-wall construction with EcoMate® injected foam insulation
- Optional enhanced thermal performance with advanced casing construction for improved resistance to external condensation
- Health-minded options, including UV lighting, bi-polar ionization, antimicrobial coatings and multi-sloped drain pans
- Stainless-steel liners ensure longevity and reliability in more extreme environments
- Structural steel bases reduce rigging effort while allowing for larger, one-piece units

The future of flexible, innovative and feature-rich semi-custom air handling systems has arrived, and YORK® Solution™ is leading the way.

Engineered for Outdoor Environments

Building on our class-leading YORK® Solution™ Indoor units, our new YORK® Solution™ Outdoor unit is engineered for outdoor environments. It's the only air handler on the market to combine the flexibility and cost-savings of our popular Solution™ Indoor air handlers with technology tailored for reliable, efficient performance in outdoor applications. YORK® Solution™ Outdoor includes all of the features and quality of our Solution™ Indoor units while adding these high-performance, outdoor-specific benefits:

Zero Penetration, Membrane Roof System

An industry first, this new roof system leverages technology proven in more than 18 billion sq. ft. of building roofing to mitigate water intrusion. It provides drastically improved leakage performance over typical, metal roofing systems through the use of a third, non-pressurized waterproof membrane layer. Without fasteners to penetrate the surface, metal seams to seal or caulking to deteriorate, this waterproof membrane provides an impermeable layer of protection against water. In fact, we're so confident our zero-penetration, membrane roof system will keep your YORK® Solution™ Outdoor Air Handler protected for years to come, we back it with our **industry-exclusive 10-year warranty** against membrane water leakage.

Permanent, Exterior Casing Protection

Representing a breakthrough in outdoor air handler exterior casing protection, our exclusive coating system offers two layers of protection with an ASTM-certified salt spray test rating that exceeds 2,000 hours – up to 4x longer than traditional paint finishes.

Full-length, Integral Service Vestibule

Outdoor environmental conditions can be brutal on air handler components – and also the people who service them. With the addition of the optional, integral service vestibule, YORK® Solution™ Outdoor units provide safe and convenient service access with full protection from the elements. The full-length, fully integrated design of the Solution™ Outdoor vestibule avoids the compromises inherent in bolt-on solutions.

Enhanced Thermal Performance

Condensation equals corrosion, which can reduce unit life. YORK® Solution™ Outdoor Air Handlers with optional enhanced thermal performance utilize advanced casing construction that provides class-leading thermal performance for improved resistance to external condensation.

Tested in the only AMCA-accredited AHU lab capable of performing simultaneous testing of sound and airflow up to 100,000 CFM.

World-class Quality

YORK® Solution™ Indoor and Outdoor semi-custom air handling units are designed to make your HVAC system last longer – and provide a better value. All units are ETL-listed and bear the ETL certification mark. Every fan and motor are factory-balanced to ensure minimal vibration. We meet or exceed Miami-Dade County and Florida Building Code hurricane-rated requirements and maintain stringent IBC and OSHPD seismic certifications. We design, engineer and assemble our systems in the United States. And to ensure maintenance is simplified after the system is installed, we offer convenient motor removal rails and a coil pull panel for easier maintenance. On outdoor units, an available field-installed external access pipe chase and optional, factory-installed full-length service vestibule make on-site maintenance easier than ever. And we back it all with the best standard warranty in the industry, including a full year of coverage on both parts and labor.

How do we do it? We test our designs in our AMCA-accredited laboratories per AMCA 210 and AMCA 300 to confirm performance. We also certify the performance of every unit per the methods of AHRI 410 and 430 to correct for cabinet and system effect, ensuring you get real fan and motor performance data – including factory-tested maximum leakage rates per SMACNA guidelines. And we provide sound data for every model of our Solution™ air handlers per AHRI 260, the only standard recognized in the industry for accurate prediction of air handling sound pressure. Depending on the application, our systems are certified according to standards including:

- AMCA 210 and 300
- AHRI 260, 410 and 430
- ASHRAE 62 and 90.1
- IBC and OSHPD seismic
- SMACNA leakage

YORK® Solution™ Air Handling Unit Features

YORK® Solution™ Indoor units and YORK® Solution™ Outdoor units feature the same advanced engineering and construction. YORK® Solution™ Outdoor units offer additional features for use in outdoor environments:

Feature	YORK® Solution™ Indoor	YORK® Solution™ Outdoor
Chilled water, hot water, glycol, steam and direct expansion (DX) coils in stacked, split, staggered, runaround and wraparound arrangements	x	x
Stainless-steel interior panels	x	x
Structural steel unit base	x	x
Piping on either or both sides of the cabinet	x	x

Multiple filtration options, including:
• MERV 1 through 16 and HEPA (up to 99.99%) media
  • 1", 2" and 4" thickness
  • Cleanable, washable or throwaway
  • 12" or 21" bags
• Gas Phase
  • Photocatalytic oxidation (PCO)
  • Activated carbon
  • Bi-polar ionization
	x	x

A choice of corrosion-resistant coil coatings, copper fins and stainless-steel coil casings for maximum durability in any location	x	x
Electric and indirect, gas-fired heating options	x	x
UV lights for coil surface decontamination or airborne disinfection	x	x
Airside economizer systems and energy recovery components	x	x
Flexible, factory-packaged controls with optional Metasys BACnet controller	x	x
Enhanced thermal performance (optional)	x	x
Full-length, fully integrated service vestibule (optional)		x
Patent-pending, zero penetration membrane roof system with extended warranty		x
Permanent, exterior casing protection		x

Superior Support

At the end of the day, you need an air handling system that works, and a team that knows exactly what's needed to support your facility. With YORK®, you get a support team that is a direct extension of the factory. Through our Building Solutions group, our sales offices and agents form an industry-exclusive network spanning more than 200 locations throughout North America.

- Our application engineers work directly with our sales teams to deliver the right system for every need
- Our service technicians are all factory-trained to work on our units
- We provide a single point of contact through a local Building Solutions branch office
- Retrofit-friendly systems are specifically Engineered for Site Disassembly (ESD™) with expert installation supervision through our local branch service and dedicated Airside Technical Support (ATS) teams

We realize our air handling systems are only as good as the men and women who stand behind them. And that's why we're proud to say YORK® helps empower your mission by delivering industry-leading performance and expert service with every Solution™ Indoor and Outdoor semi-custom air handler we build.

Johnson Controls, the Johnson Controls logo and YORK are registered trademarks of Johnson Controls, Inc., in the United States of America and other countries. Other trademarks used herein may be trademarks or registered trademarks of other companies.

©2020 Johnson Controls P.O. Box 423, Milwaukee, WI 53201.
All rights reserved worldwide. Printed in USA. PUBL-2286-A-0420

For more information, visit **YORK.com/AHU**.

The power behind **your mission**

THE WALL-MOUNT™ HEAT PUMPS - (60HZ)

Climate Control Solutions

Models: W18H2 to W60H2 60Hz
Heating Capacities: 16,000 to 54,000 BTUH
Cooling Capacities: 16,400 to 54,000 BTUH

GREEN REFRIGERANT
R-410A

The Bard Wall-Mount Heat Pump is a self-contained energy efficient heating and cooling system, which is designed to offer maximum indoor comfort at a minimal cost without using valuable indoor floor space or outside ground space. This unit is the ideal product for versatile applications such as: new construction, modular offices, school modernization, telecommunication structures, portable structures or correctional facilities. Factory or field installed accessories are available to meet specific job requirements.

Engineered Features

Aluminum Finned Copper Coils:
Grooved tubing and enhanced louvered fin for maximum heat transfer and energy efficiency.

Twin Blowers:
Move air quietly. Most models feature multispeed blower motors providing airflow adjustment for high and low static operation. Motor overload protection is standard on all models.

Heat Pump Compressor:
Scroll Compressors are standard on all 1½ to 5 ton models. Eliminates need for crankcase heater.

Phase Rotation Monitor:
Standard on all 3 phase scroll compressors. Protects against reverse rotation if power supply is not properly connected.

R-410A Refrigerant:
Designed with R-410A (HFC) non-ozone depleting refrigerant in compliance with the Montreal protocol and 2010 EPA requirements.

Liquid Line Filter Drier:
Standard on all units. Protects system against moisture.

Galvanized 20 Gauge Zinc Coated Steel Cabinet:
Cleaned, rinsed, sealed and dried before the polyurethane primer is applied. The cabinet is handsomely finished with a baked on, beige textured enamel, which allows it to withstand 1000 hours of salt spray tests per ASTM B117-03.

Foil Faced Insulation:
Standard on all units.

Electrical Components:
Are easily accessible for routine inspection and maintenance through a right side, service panel opening. Features a lockable, hinged access cover to the circuit breaker or toggle disconnect switch.

Electric Heat Strips:
Features an automatic limit and thermal cut-off safety control. Heater packages are factory or field installed for all 1½ through 5 ton models. Features easy slide-in field assembly with various BTUH outputs.

Condenser Fan and Motor Shroud Assembly:
Slide out for easy access.

Filter Service Door:
Separate service door provides easy access for filter change.

One Inch, Disposable Air Filters:
Are standard equipment. Optional one inch washable filters available and filter racks permit the addition of 2" pleated filter. Factory or field installed.

Solid State Electronic Heat Pump Control:
Provides efficient 30, 60 or 90 minute defrost cycle. A thermistor sensor, speed up terminal for service and 10 minute defrost override are standard on the electronic heat pump control.

High & Low Pressure Switches are Auto-Reset:
Standard on all units. Built-in lockout circuit resets from the room thermostat. Provides commercial quality protection to the compressor.

Five Minute Compressor Time Delay:
Short cycle protection is standard. Built into the heat pump control.

Emergency Heat Circuit:
Permits continuous operation of the system.

Barometric Fresh Air Damper:
Standard on all units. Allows up to 25% outside fresh air.

Built-in Circuit Breakers:
Standard on all electric heat versions of single and three phase (230/208 volt) equipment. Toggle disconnects are standard on all electric heat versions of three phase (460 volt) equipment.

Slope Top:
Standard feature for water run-off.

Full Length Mounting Brackets:
Built into cabinet for improved appearance and easy installation.
NOTE: Bottom mounting bracket included to assist in installation.

Top Rain Flashing:
Standard feature on all models.

Ventilation System Packages

All packages are designed to meet your specific ventilation requirements utilizing one of six ventilation options for the product. The ventilation package is mounted within the unit eliminating the need for an exterior mounted hood or damper assembly on the unit. All assemblies can be factory installed, installed in the field at time of installation or as a retrofit system after installation.

- Standard - Barometric Fresh Air Damper
- Optional - Motorized Fresh Air Damper
- Optional - Blank off Plate
- Optional - Commercial Room Ventilator w/Exhaust
  - CRV - Spring Return
  - CRVP - Power Return
- Optional - Economizer with Exhaust
- Optional - Energy Recovery Ventilator

- Complies with efficiency requirements of ASHRAE/IESNA 90.1-2010.
- Certified to ANSI/ARI Standard 390-2003 for SPVU (Single Package Vertical Units).
- Intertek ETL Listed to Standard for Safety Heating and Cooling Equipment ANSI/UL 1995/CSA 22.2 No. 236-05, Fourth Edition.
- Commercial Product - Not intended for Residential application.

Capacity and Efficiency Ratings

MODELS	W18H2	W24H2	W30H2	W36H2	W42H2	W48H2	W60H2
Cooling BTUH ①	16,400	23,600	29,800	34,600	42,000	46,000	54,000
EER ②	9.50	9.00	9.20	9.00	9.00	9.00	9.00
High Temp Heating (47F) BTUH ①	16,000	24,000	29,000	35,000	42,000	44,000	54,000
COP ②	3.00	3.00	3.00	3.00	3.00	3.00	3.00
Low Temp Heating (17F) BTUH ①	9,000	14,000	17,000	21,000	25,000	26,000	32,000
COP ②	1.80	2.00	2.00	2.00	2.00	2.00	2.00

① Capacity is certified in accordance with ANSI/ARI Standard 390-2003.
② EER = Energy Efficiency Ratio, COP = Coefficient of Performance and are certified in accordance with ANSI/ARI Standard 390-2003.

Specifications 1-1/2 through 3 Ton

MODELS	W18H2-A	W24H2-A	W24H2-B	W24H2-C	W30H2-A	W30H2-B	W30H2-C	W36H2-A	W36H2-B	W36H2-C
Electrical Rating – 60 Hz	230/208 - 1	230/208 - 1	230/208 - 3	460 - 3	230/208 - 1	230/208 - 3	460 - 3	230/208 - 1	230/208 - 3	460 - 3
Operating Voltage Range	197-253	197-253	197-253	414-506	197-253	197-253	414-506	197-253	197-253	414-506
Compressor--Circuit A										
Voltage	230/208	230/208	230/208	460	230/208	230/208	460	230/208	230/208	460
Rated Load Amps	6.2/7.3	12.7/15.2	8.3/9.9	6.1	12.4/13.6	8.0/8.7	5.5	14.7/16.4	10.9/12.1	5.5
Branch Circuit Selection Current	9.0	15.2	9.9	6.1	14.2	9.0	5.7	18.0	13.3	6.0
Lock Rotor Amps	48/48	64/64	58/58	28	77/77	71/71	38	112/112	88/88	44
Compressor Type	Scroll	Scroll	Scroll	Scroll	Scroll	Scroll	Scroll	Scroll	Scroll	Scroll
Fan Motor & Condenser										
Fan Motor--HP--RPM	1/5 - 1075	1/5 - 1075	1/5 - 1075	1/5 - 1075	1/5 - 1075	1/5 - 1075	1/5 - 1075	1/5 - 1075	1/5 - 1075	1/5 - 1075
Fan Motor--Amps	1.2	1.2	1.2	1.4	1.5	1.5	1.4	1.5	1.5	1.4
Fan--DIA/CFM	18" - 1600	18" - 1600	18" - 1600	18" - 1600	20" - 2000	20" - 2000	20" - 2000	20" - 2000	20" - 2000	20" - 2000
Blower Motor & Evap.										
Blower Motor--HP-RPM-SPD	1/6-1100-2	1/6-1100-1	1/6-1100-1	1/3-1100-2	1/3-1100-2	1/3-1100-2	1/3-1100-2	1/3-1100-2	1/3-1100-2	1/3-1100-2
Blower Motor--Amps	1.0	1.0	1.0	1.1	2.2	2.2	1.1	2.2	2.2	1.1
CFM Cooling & E.S.P. w/Filter (Rated-Wet Coil)	600 - .3	800 -. 2	800 - .2	800 - .2	1000 - .4	1000 - .4	1000 - .4	1100 - .3	1100 - .3	1100 - .3
Filter Sizes (inches) STD.	16 x 25 x 1	16 x 25 x 1	16 x 25 x 1	16 x 25 x 1	16 x 30 x 1	16 x 30 x 1	16 x 30 x 1	16 x 30 x 1	16 x 30 x 1	16 x 30 x 1
Shipping Weight --LBS.	360	360	360	360	400	400	400	400	400	400

Specifications 3-1/2 through 5 Ton

MODELS	W42H2-A	W42H2-B	W42H2-C	W48H2-A	W48H2-B	W48H2-C	W60H2-A	W60H2-B	W60H2-C
Electrical Rating – 60 Hz	230/208 - 1	230/208 - 3	460 - 3	230/208 - 1	230/208 - 3	460 - 3	230/208 - 1	230/208 - 3	460 - 3
Operating Voltage Range	197-253	197-253	414-506	197-253	197-253	414-506	197-253	197-253	414-506
Compressor--Circuit A									
Voltage	230/208	230/208	460	230/208	230/208	460	230/208	230/208	460
Rated Load Amps	18.4/21.5	11.6/13.5	6.1	19.5/21.2	13.6/14.7	6.6	21.5/25.3	12.8/15.1	7.6
Branch Circuit Selection Current	21.8	13.8	6.3	23.1	16.1	7.1	26.3	15.7	7.8
Lock Rotor Amps	117/117	84/84	41	131/131	91/91	46	134/134	110/110	52
Compressor Type	Scroll	Scroll	Scroll	Scroll	Scroll	Scroll	Scroll	Scroll	Scroll
Fan Motor & Condenser									
Fan Motor--HP--RPM-SPD	1/3 - 825 - 2	1/3 - 825 - 2	1/3 - 825 - 2	1/3 - 825 - 2	1/3 - 825 - 2	1/3 - 825 - 2	1/3 - 825 - 2	1/3 - 825 - 2	1/3 - 825 - 2
Fan Motor--Amps	2.5	2.5	1.3	2.5	2.5	1.3	2.5	2.5	1.3
Fan--DIA/CFM	24" - 2750	24" - 2750	24" - 2750	24" - 2750	24" - 2750	24" - 2750	24" - 2750	24" - 2750	24" - 2750
Blower Motor & Evap.									
Blower Motor--HP-RPM-SPD	1/2-1070-2	1/2-1070-2	1/2-1070-2	1/2-1070-2	1/2-1070-2	1/2-1070-2	1/2-1070-2	1/2-1070-2	1/2-1070-2
Blower Motor--Amps	3.3	3.3	1.9	3.3	3.3	1.9	3.3	3.3	1.9
CFM Cooling & E.S.P. w/Filter (Rated-Wet Coil)	1400 - .3	1400 - .3	1400 - .3	1550 - .2	1550 - .2	1550 - .2	1700 - .3	1700 - .3	1700 - .3
Filter Sizes (inches) STD.	20 x 30 x 1	20 x 30 x 1	20 x 30 x 1	20 x 30 x 1	20 x 30 x 1	20 x 30 x 1	20 x 30 x 1	20 x 30 x 1	20 x 30 x 1
Shipping Weight --LBS.	550	550	550	550	550	550	580	580	580

Ventilation System Packages

Bard Wall-Mounts are designed to provide optional ventilation packages to meet all of your ventilation and indoor air quality requirements. All units are equipped with a barometric fresh air damper as the standard ventilation package. All ventilation packages can be built-in at the factory, or field-installed at a later date.

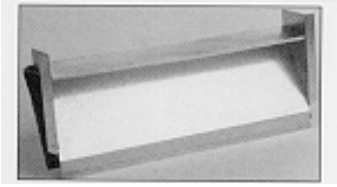

Barometric Fresh Air Damper

BAROMETRIC FRESH AIR DAMPER - BFAD **STANDARD**

The barometric fresh air damper is a standard feature on all models. It is installed on the inside of the service door and allows outside ventilation air, up to 25% of the total airflow rating of the unit, to be introduced through the air inlet openings and to be mixed with the conditioned air. The damper opens during blower operation and closes when the blower is off. Adjustable blade stops allow different amounts of outside air to be introduced into the building and can be easily locked closed if required.

BLANK OFF PLATE - BOP **OPTIONAL**

A blank off plate is installed on the inside of the service door. It covers the air inlet openings, which restricts any outside air from entering the unit. The blank off plate should be utilized in applications where outside air is not required to be mixed with the conditioned air.

Motorized Fresh Air Damper

MOTORIZED FRESH AIR DAMPER - MFAD **OPTIONAL**

The motorized fresh air damper is internally mounted behind the service door and allows outside ventilation air, up to 25% of the total airflow rating of the unit, to be introduced through the air inlet openings and to be mixed with the conditioned air. The two position damper can be fully open or closed. The damper blade is powered open by a 24VAC motor with spring return on power loss. The damper can be controlled by indoor blower operation or can be field connected to be managed based on building occupancy.

NOTE: The above vent systems are intake only without built-in exhaust capability. Building will likely require separate field installed barometric relief or mechanical exhaust elsewhere within the conditioned space. Balancing dampers in the return air grille may be required to achieve specified amount of outdoor air intake.

Commercial Room Ventilator

COMMERCIAL ROOM VENTILATOR - CRV **OPTIONAL**

The built-in commercial room ventilator is internally mounted behind the service door and allows outside ventilation air, up to 50% of the total airflow rating of the unit, to be introduced through the air inlet openings. It includes a built-in exhaust air damper.

The commercial room ventilator (CRV) is a simple and innovative approach to improving the indoor air quality by providing fresh air intake and exhaust capability through the CRV. The damper can be easily adjusted to control the amount of fresh air supplied into the building. The CRV can be controlled by indoor blower operation or field controlled based on room occupancy. Two versions available (except on 1.5 and 2-Ton models). The CRV and CRVS are power open - spring return on power loss, and CRVP is power open and power close. Complies with ANSI/ASHRAE Standard 62.1 “Ventilation for Acceptable Indoor Air Quality”.

Economizer

ECONOMIZER – ECONWM-Series **OPTIONAL**

The built-in economizer system is internally mounted behind the service door and allows outdoor air to be introduced through the air inlet openings. The amount of outdoor air varies in response to the system controls and settings defined by the end user. It includes a built-in exhaust air damper. The economizer is designed to provide “free cooling” when outside air conditions are cool and dry enough to satisfy cooling requirements without running the compressor. This in turn provides lower operating costs, while extending the life of the compressor.

- ECONWMT Equipment Building versions have extended 11" air intake hood to deliver up to 100% of cooling rated airflow.
- ECONWMS Standard versions have 3" air intake hood to deliver up to 75% of cooling rated airflow.

Standard Features:

- Fully modulating
- Honeywell Direct Drive Hi-Torque Actuator
- No linkage required
- Simple single blade design
- Positive shut-off with non-stick gaskets
- Electronic DB and/or Enthalpy sensors depending upon version
- Honeywell JADE electronic economizer module with precision settings and diagnostics
- DB or Enthalpy economizer versions available

Energy Recovery Ventilator

WALL-MOUNT ENERGY RECOVERY VENTILATOR - ERVF **OPTIONAL**

The wall-mount energy recovery ventilator (ERV) is a highly innovative approach to meeting indoor air quality ventilation requirements as established by ANSI/ASHRAE Standard 62.1. The ERV allows from 200 to 450 CFM (depending upon model) of fresh air and exhaust through the unit while maintaining superior indoor comfort and humidity levels. In most cases this can be accomplished without increasing equipment sizing or operating costs. Heat transfer efficiency is up to 67% during summer and 75% during winter conditions.

The ERV consists of a unique “rotary energy recovery cassette” that provides effective sensible and latent heat transfer capabilities during summer and winter conditions. Various control schemes are addressed including limiting ventilation during building occupancy only.

The ERV is designed to be internally mounted behind the service door in the W**A, W**H or W**L model wall-mount units. It can be built-in at the factory or field installed as an option. ERVF-*3 and ERVF-*5 can be independently adjusted for intake and exhaust rates.

Commercial Room Ventilator Performance Data · CRV-2

W18 & W24 TOTAL AND VENTILATION AIRFLOW

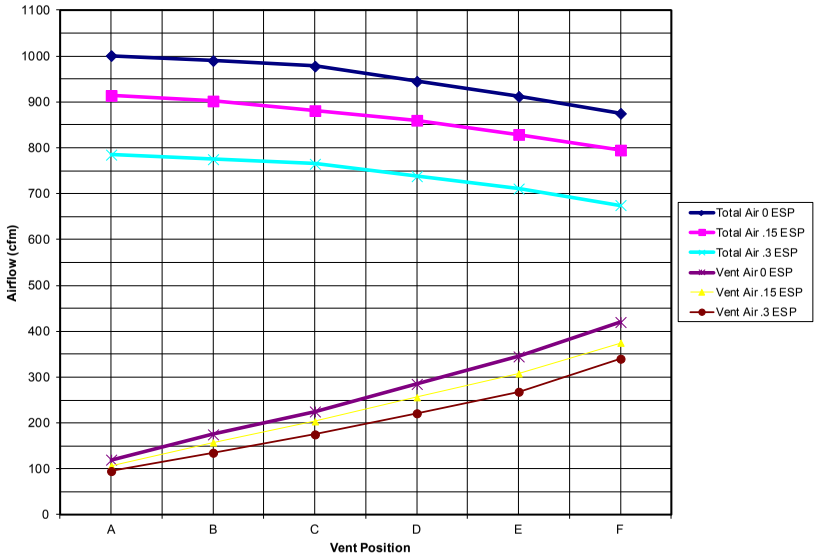

Commercial Room Ventilator Performance Data · CRVS-3 and CRVP-3

W30 & W36 HIGH SPEED TOTAL AND VENTILATION AIRFLOW

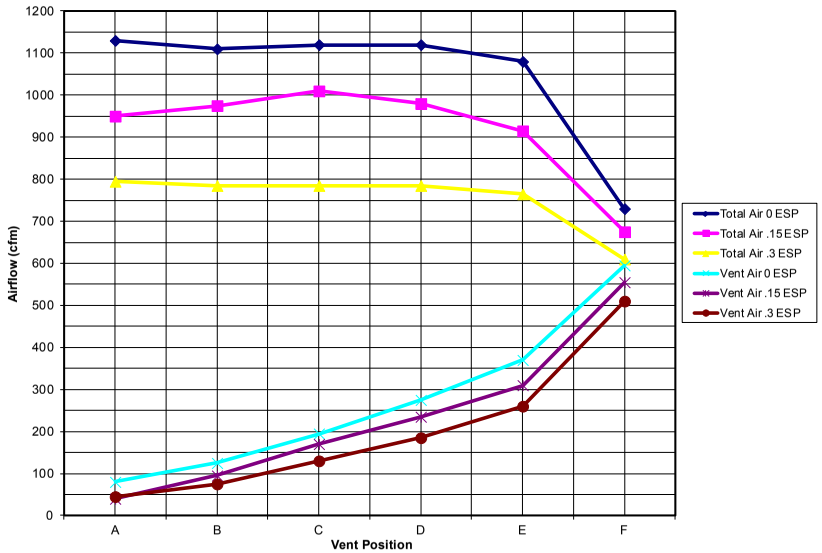

W30 & W36 LOW SPEED TOTAL AND VENTILATION AIRFLOW

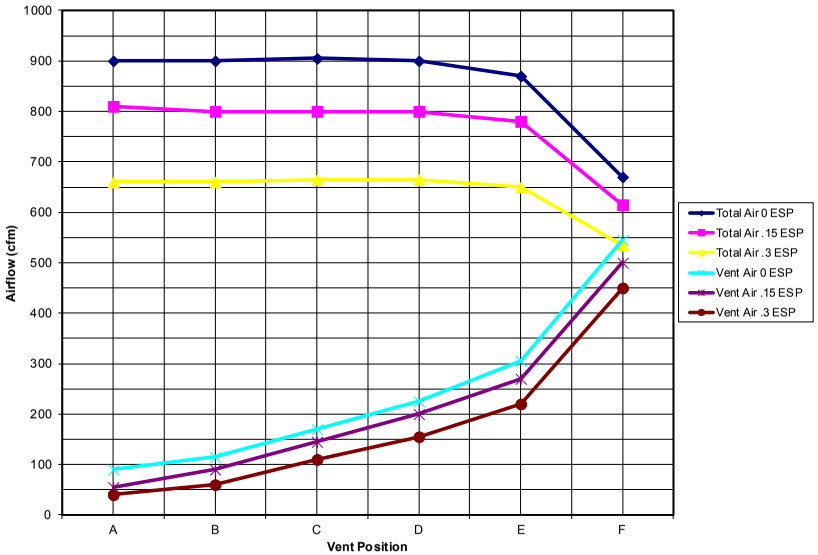

W42 & W48 HIGH SPEED TOTAL AND VENTILATION AIRFLOW

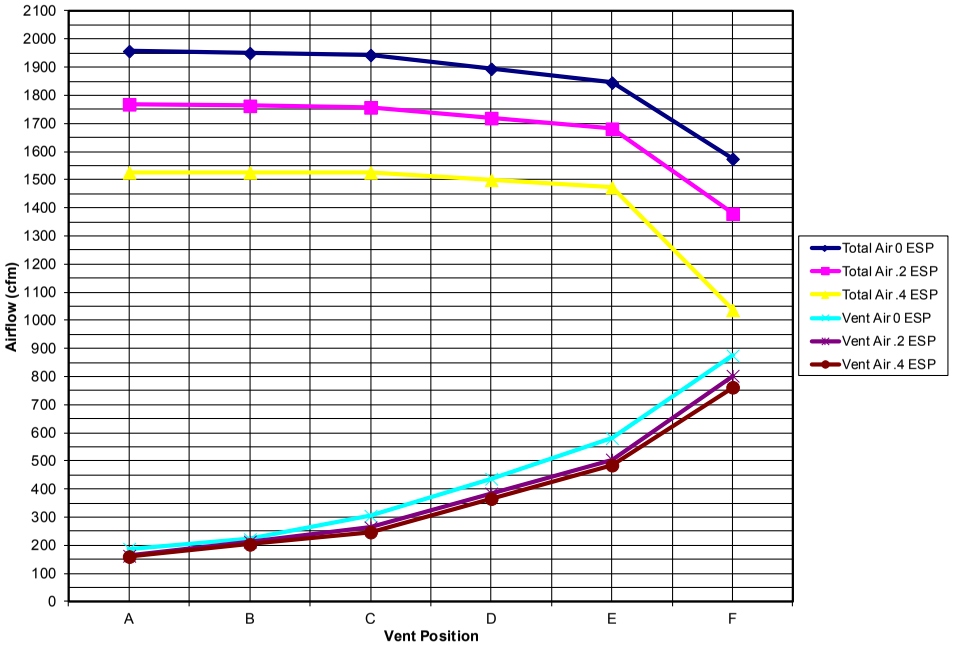

W60 HIGH SPEED TOTAL AND VENTILATION AIRFLOW

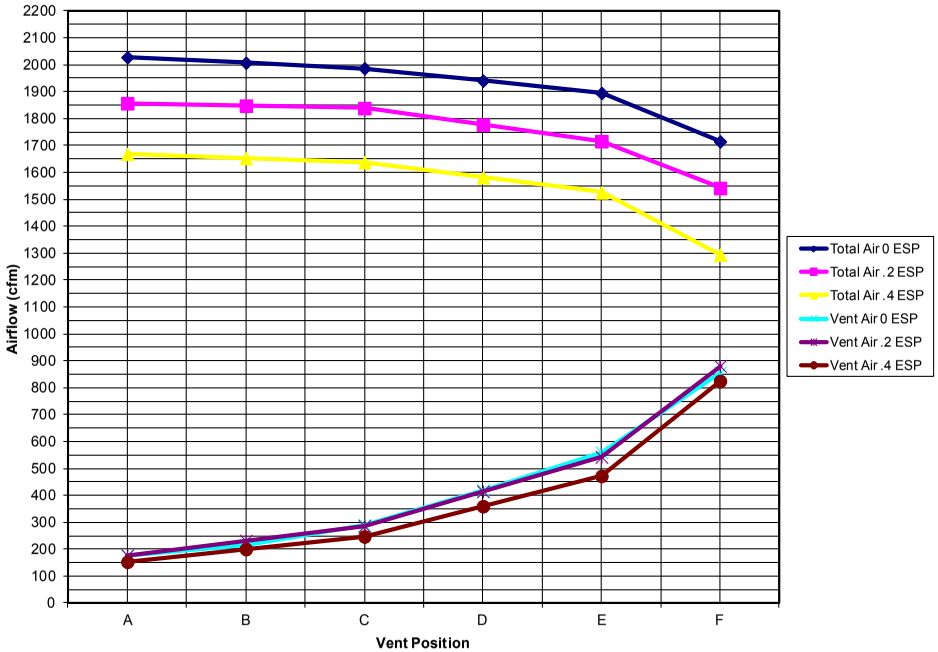

W42 & W48 LOW SPEED TOTAL AND VENTILATION AIRFLOW

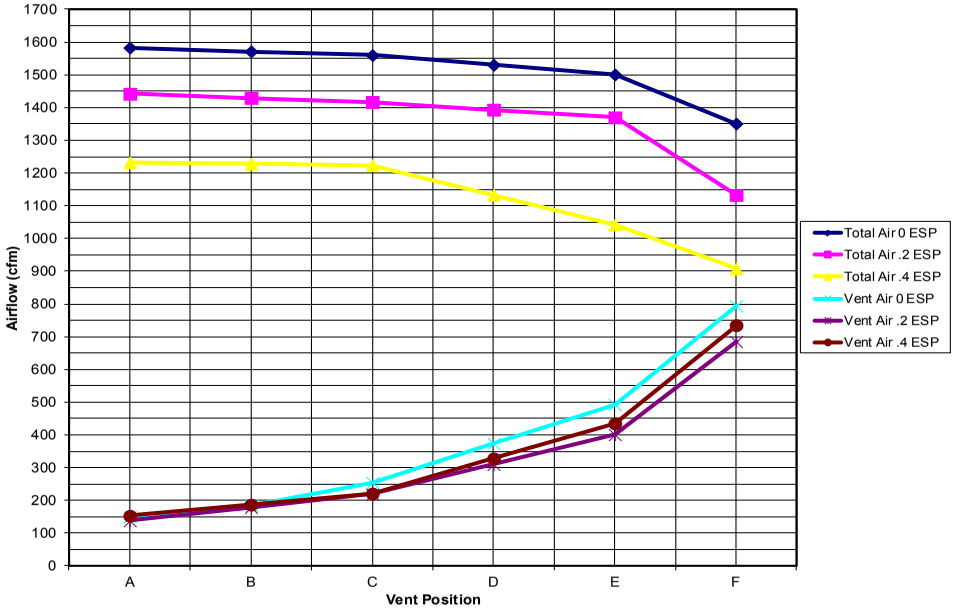

W60 LOW SPEED TOTAL AND VENTILATION AIRFLOW

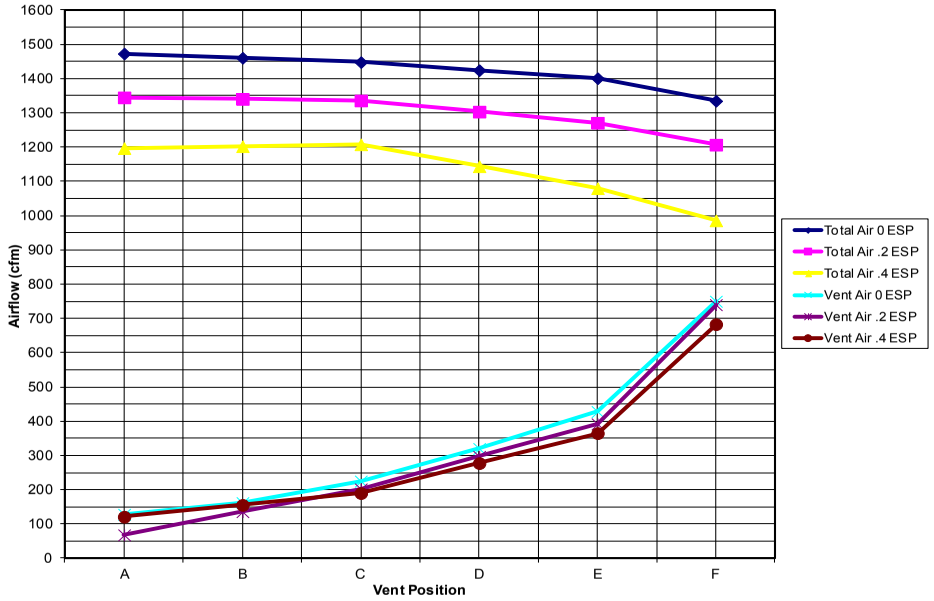

Performance and Application Data· ERVF·*Z

SUMMER COOLING PERFORMANCE
(INDOOR DESIGN CONDITIONS 75°DB/62°WB)

Ambient O.D.		VENTILATION RATE -- 250 CFM 62% EFFICIENCY						VENTILATION RATE -- 225 CFM 63% EFFICIENCY						VENTILATION RATE -- 200 CFM 63% EFFICIENCY					
DB/WB	F	VLT	VLS	VLL	HRT	HRS	HRL	VLT	VLS	VLL	HRT	HRS	HRL	VLT	VLS	VLL	HRT	HRS	HRL
105	75	11925	8100	1325	7394	5022	822	10727	7287	3441	6758	4591	2168	9540	6480	3060	6010	4082	1928
	70	8100	8100	0	5022	5022	0	7287	7287	0	4591	4591	0	6480	6480	0	4082	4082	0
	65	8100	8100	0	5022	5022	0	7287	7287	0	4591	4591	0	6480	6480	0	4082	4082	0
100	80	17550	6750	10800	10881	4185	6696	15788	6072	9716	9946	3826	6121	14040	5400	8640	8845	3402	5443
	75	11925	6750	5175	7394	4185	3209	10727	6072	4655	6758	3826	2933	9540	5400	4140	6010	3402	2608
	70	6863	6750	113	4255	4185	70	6173	6072	101	3889	3826	64	5490	5400	90	3458	3402	56
	65	6750	6750	0	4185	4185	0	6072	6072	0	3826	3826	0	5400	5400	0	3402	3402	0
	60	6750	6750	0	4185	4185	0	6072	6072	0	3826	3826	0	5400	5400	0	3402	3402	0
95	80	17550	5400	12150	10881	3348	7533	15788	4858	10930	9946	3060	6886	14040	4320	9720	8845	2722	6124
	75	11925	5400	6525	7394	3348	4046	10727	4858	5870	6758	3060	3698	9540	4320	5220	6010	2722	3289
	70	6863	5400	1463	4255	3348	907	6173	4858	1315	3889	3060	829	5490	4320	1170	3458	2722	737
	65	5400	5400	0	3348	3348	0	4858	4858	0	3060	3060	0	4320	4320	0	2722	2722	0
	60	5400	5400	0	3348	3348	0	4858	4858	0	3060	3060	0	4320	4320	0	2722	2722	0
90	80	17550	4050	13500	10881	2511	8370	15788	3643	12145	9946	2295	7651	14040	3240	10800	8845	2041	6804
	75	11925	4050	7875	7394	2511	4883	10727	3643	7084	6758	2295	4463	9540	3240	6300	6010	2041	3969
	70	6863	4050	2813	4255	2511	1744	6173	3643	2530	3889	2295	1594	5490	3240	2250	3458	2041	1417
	65	4050	4050	0	2511	2511	0	3643	3643	0	2295	2295	0	3240	3240	0	2041	2041	0
	60	4050	4050	0	2511	2511	0	3643	3643	0	2295	2295	0	3240	3240	0	2041	2041	0
85	80	17550	2700	14850	10881	1674	9207	15788	2429	13359	9946	1530	8416	14040	2160	11880	8845	1361	7484
	75	11925	2700	9225	7394	1674	5720	10727	2429	8298	6758	1530	5228	9540	2160	7380	6010	1361	4649
	70	6863	2700	4163	4255	1674	2581	6173	2429	3744	3889	1530	2359	5490	2160	3300	3458	1361	2098
	65	2700	2700	0	1674	1674	0	2429	2429	0	1530	1530	0	2160	2160	0	1361	1361	0
	60	2700	2700	0	1674	1674	0	2429	2429	0	1530	1530	0	2160	2160	0	1361	1361	0
80	75	11925	1350	10575	7394	837	6557	10727	1214	9513	6758	765	5993	9540	1080	8460	6010	680	5330
	70	6863	1350	5513	4255	837	3418	6173	1214	4959	3889	765	3124	5490	1080	4410	3458	680	2778
	65	2363	1350	1013	1465	837	628	2125	1214	911	1339	765	547	1890	1080	810	1190	680	510
	60	1350	1350	0	837	837	0	1214	1214	0	765	765	0	1080	1080	0	680	680	0
75	70	6863	0	6863	4255	0	4255	6173	0	6173	6889	0	3889	5490	0	5490	3458	0	3458
	65	2363	0	2363	1465	0	1465	2125	0	2125	1339	0	1339	1890	0	1890	1190	0	1190
	60	0	0	0	0	0	0	0	0	0	0	0	0	0	0	0	0	0	0

ERVF·*Z 2-Ton Winter Heating Performance

(INDOOR DESIGN CONDITIONS 70°F DB)

Ambient O.D.	VENTILATION RATE								
	250 CFM 74% EFF.			225 CFM 75% EFF.			200 CFM 75% EFF.		
DB/°F	VLT	HR	VL	VLT	HR	VL	VLT	HR	VL
65	1350	999	351	1215	911	304	1080	821	259
60	2700	1998	702	2430	1823	608	2160	1642	518
55	4050	2997	1053	3645	2734	911	3240	2462	778
50	5400	3996	1404	4860	3645	1215	4320	3283	1037
45	6750	4995	1755	6075	4556	1519	5400	4104	1296
40	8100	5994	2106	7290	5468	1823	6480	4925	1555
35	9450	6993	2457	8505	6379	2126	7560	5746	1814
30	10800	7992	2808	9720	7290	2430	8640	6566	2074
25	12150	8991	3159	10935	8201	2734	9720	7387	2333
20	13500	9990	3510	12150	9113	3038	10800	8208	2592
15	14850	10989	3861	13365	10024	3341	11880	9029	2851
10	16200	11988	4212	14580	10935	3645	12960	9850	3110
5	17550	12987	4563	15795	11846	3949	14040	10670	3370
0	18900	13986	4914	17010	12758	4253	15120	11491	3629
-5	20250	14985	5265	18225	13669	4556	16200	12312	3888
-10	21600	15984	5616	19440	14580	4860	17280	13133	4147

LEGEND:

VLT = Ventilation Load - Total
VLS = Ventilation Load - Sensible
VLL = Ventilation Load - Latent
HRT = Heat Recovery - Total
HRS = Heat Recovery - Sensible
HRL = Heat Recovery - Latent

Performance and Application Data· ERVF·*3

SUMMER COOLING PERFORMANCE
(INDOOR DESIGN CONDITIONS 75°DB/62°WB)

Ambient O.D.		VENTILATION RATE -- 250 CFM 62% EFFICIENCY						VENTILATION RATE -- 225 CFM 63% EFFICIENCY						VENTILATION RATE -- 200 CFM 63% EFFICIENCY					
DB/WB	F	VLT	VLS	VLL	HRT	HRS	HRL	VLT	VLS	VLL	HRT	HRS	HRL	VLT	VLS	VLL	HRT	HRS	HRL
105	75	19080	12960	6120	12020	8164	3855	15502	10530	4972	9921	6739	3182	11925	8100	3825	7751	5265	2486
	70	12960	12960	0	8164	8164	0	10530	10530	0	6739	6739	0	8100	8100	0	5265	5265	0
	65	12960	12960	0	8164	8164	0	10530	10530	0	6739	6739	0	8100	8100	0	5265	5265	0
100	80	28080	10800	17280	17690	6804	10886	22815	8775	14040	14601	5616	8985	17550	6750	10800	11407	4387	7019
	75	19080	10800	8280	12020	6804	5216	15502	8775	6727	9921	5616	4305	11925	6750	5175	7751	4387	3363
	70	10980	10800	180	6717	6804	113	8921	8775	146	5709	5616	93	6862	6750	112	4460	4387	73
	65	10800	10800	0	6804	6804	0	8775	8775	0	5616	5616	0	6750	6750	0	4387	4387	0
	60	10800	10800	0	6804	6804	0	8775	8775	0	5616	5616	0	6750	6750	0	4387	4387	0
95	80	28080	8640	19440	17690	5443	12247	22815	7020	15795	14601	4492	10108	17550	5400	12150	11407	3510	7897
	75	19080	8640	10440	12020	5443	6577	15502	7020	8482	9921	4492	5428	11925	5400	6525	7751	3510	4241
	70	10980	8640	2340	6917	5443	1474	8921	7020	1901	5709	4492	1216	6862	5400	1462	4460	3510	950
	65	8640	8640	0	5443	5443	0	7020	7020	0	4492	4492	0	5400	5400	0	3510	3510	0
	60	8640	8640	0	5443	5443	0	7020	7020	0	4492	4492	0	5400	5400	0	3510	3510	0
90	80	28080	6480	21600	17690	4082	13608	22815	5265	17550	14601	3369	11232	17550	4050	13500	11407	2632	8774
	75	19080	6480	12600	12020	4082	7938	15502	5265	10237	9921	3369	6552	11925	4050	7875	7751	2632	5118
	70	10980	6480	4500	6917	4082	2835	8921	5265	3656	5709	3369	2340	6862	4050	2812	4460	2632	1828
	65	6480	6480	0	4082	4082	0	5265	5265	0	3369	3369	0	4050	4050	0	2632	2632	0
	60	6480	6480	0	4082	4082	0	5265	5265	0	3369	3369	0	4050	4050	0	2632	2632	0
85	80	28080	4320	23760	17690	2721	14968	22815	3510	19305	14601	2246	12355	17550	2700	14850	11407	1755	9652
	75	19080	4320	14760	12020	2721	9298	15502	3510	11992	9921	2246	7675	11925	2700	9225	7751	1755	5996
	70	10980	4320	6660	6917	2721	4195	8921	3510	5411	5709	2246	3463	6862	2700	4162	4460	1755	2705
	65	4320	4320	0	2721	2721	0	3510	3510	0	2246	2246	0	2700	2700	0	1755	1755	0
	60	4320	4320	0	2721	2721	0	3510	3510	0	2246	2246	0	2700	2700	0	1755	1755	0
80	75	19080	2160	16920	12020	1360	10659	15502	1755	13747	9921	1123	8798	11925	1350	10575	7751	877	6873
	70	10980	2160	8820	6917	1360	5556	8921	1755	7166	5709	1123	4586	6862	1350	5512	4460	877	3583
	65	3780	2160	1620	2381	1360	1020	3071	1755	1316	1965	1123	842	2362	1350	1012	1535	877	658
	60	2160	2160	0	1360	1360	0	1755	1755	0	1123	1123	0	1350	1350	0	877	877	0
75	70	10980	0	10980	6917	0	6917	8921	0	8921	5709	0	5709	6862	0	6862	4460	0	4460
	65	3780	0	3780	2381	0	2380	3071	0	3071	1965	0	1965	2362	0	2362	1535	0	1535
	60	0	0	0	0	0	0	0	0	0	0	0	0	0	0	0	0	0	0

ERVF·3* 3-Ton Winter Heating Performance

(INDOOR DESIGN CONDITIONS 70°F DB)

Ambient O.D.	VENTILATION RATE								
	400 CFM 75% EFF.			325 CFM 76% EFF.			250 CFM 77% EFF.		
DB/°F	VLT	HR	VL	VLT	HR	VL	VLT	HR	VL
65	2160	1620	540	1755	1334	421	1350	1040	311
60	4320	3240	1080	3510	2668	842	2700	2079	621
55	6480	4860	1620	5265	4001	1264	4050	3119	932
50	8640	6480	2160	7020	5335	1685	5400	4158	1242
45	10800	8100	2700	8775	6669	2106	6750	5198	1553
40	12960	9720	3240	10530	8003	2527	8100	6237	1863
35	15120	11340	3780	12285	9337	2948	9450	7277	2174
30	17280	12960	4320	14040	10670	3370	10800	8316	2484
25	19440	14580	4860	15795	12004	3791	12150	9356	2795
20	21600	16200	5400	17550	13338	4212	13500	10395	3105
15	23760	17820	5940	19305	14672	4633	14850	11435	3416
10	25920	19440	6480	21060	16006	5054	16200	12474	3726
5	28080	21060	7020	22815	17339	5476	17550	13514	4037
0	30240	22680	7560	24570	18673	5897	18900	14553	4347
-5	32400	24300	8100	26325	20007	6318	20250	15593	4658
-10	34560	25920	8640	28080	21341	6739	21600	16632	4968

LEGEND:

VLT = Ventilation Load - Total
VLS = Ventilation Load - Sensible
VLL = Ventilation Load - Latent
HRT = Heat Recovery - Total
HRS = Heat Recovery - Sensible
HRL = Heat Recovery - Latent

Performance and Application Data· ERVF·*5

SUMMER COOLING PERFORMANCE
(INDOOR DESIGN CONDITIONS 75°DB/62°WB)

Ambient O.D.		VENTILATION RATE -- 250 CFM 62% EFFICIENCY						VENTILATION RATE -- 225 CFM 63% EFFICIENCY						VENTILATION RATE -- 200 CFM 63% EFFICIENCY					
DB/WB	F	VLT	VLS	VLL	HRT	HRS	HRL	VLT	VLS	VLL	HRT	HRS	HRL	VLT	VLS	VLL	HRT	HRS	HRL
105	75	21465	14580	6884	13952	9477	4475	17887	12150	5737	11805	8018	3786	14310	9720	4590	9587	6512	3075
	70	14580	14580	0	9477	9477	0	12150	12150	0	8018	8018	0	9720	9720	0	6512	6512	0
	65	14580	14580	0	9477	9477	0	12150	12150	0	8018	8018	0	9720	9720	0	6512	6512	0
100	80	31590	12150	19440	20533	7897	12635	26325	10125	16200	17374	6682	10692	21060	8100	12960	14110	5427	8683
	75	21465	12150	9314	13952	7897	6054	17887	10125	7762	11805	6682	5123	14310	8100	6210	9587	5427	4160
	70	12352	12150	202	8029	7897	131	10293	10125	168	6793	6682	111	8235	8100	135	5517	5427	90
	65	12150	12150	0	7897	7897	0	10125	10125	0	6682	6682	0	8100	8100	0	5427	5427	0
	60	12150	12150	0	7897	7897	0	10125	10125	0	6682	6682	0	8100	8100	0	5427	5427	0
95	80	31590	9720	21870	20533	6318	14215	26325	8100	18225	17374	5345	12028	21060	6480	14580	14110	4341	9768
	75	21465	9720	11744	13952	6318	7634	17887	8100	9787	11805	5345	6459	14310	6480	7830	9587	4341	5246
	70	12352	9720	2632	8029	6318	1711	10293	8100	2193	6793	5345	1447	8235	6480	1755	5517	4341	1175
	65	9720	9720	0	6318	6318	0	8100	8100	0	5345	5345	0	6480	6480	0	4341	4341	0
	60	9720	9720	0	6318	6318	0	8100	8100	0	5345	5345	0	6480	6480	0	4341	4341	0
90	80	31590	7290	24300	20533	4738	15794	26325	6075	20250	17374	4009	13365	21060	4860	16200	14110	3256	10854
	75	21465	7290	14175	13952	4738	9213	17887	6075	11812	11805	4009	7796	14310	4860	9450	9587	3256	6331
	70	12352	7290	5062	8029	4738	3290	10293	6075	4218	6793	4009	2784	8235	4860	3375	5517	3256	2261
	65	7290	7290	0	4738	4738	0	6075	6075	0	4009	4009	0	4860	4860	0	3256	3256	0
	60	7290	7290	0	4738	4738	0	6075	6075	0	4009	4009	0	4860	4860	0	3256	3256	0
85	80	31590	4860	26730	20533	3159	17374	26325	4050	22275	17374	2672	14701	21060	3240	17820	14110	2170	11939
	75	21465	4860	16605	13952	3159	10793	17887	4050	13837	11805	2672	9132	14310	3240	11070	9587	2170	7416
	70	12352	4860	7492	8029	3159	4870	10293	4050	6243	6793	2672	4120	8235	3240	4995	5517	2170	3346
	65	4860	4860	0	3159	3159	0	4050	4050	0	2672	2672	0	3240	3240	0	2170	2170	0
	60	4860	4860	0	3159	3159	0	4050	4050	0	2672	2672	0	3240	3240	0	2170	2170	0
80	75	21465	2430	19035	13952	13952	12372	17887	2025	15862	11805	1336	10469	14310	1620	12690	9587	1085	8502
	70	12352	2430	9922	8029	8029	6449	10293	2025	8268	6793	1336	5457	8235	1620	6615	5517	1085	4432
	65	4252	2430	1822	2764	2764	1184	3543	2025	1518	2338	1336	1002	2835	1620	1215	1899	1085	814
	60	2430	2430	0	1579	1579	0	2025	2025	0	1336	1336	0	1620	1620	0	1085	1085	0
75	70	12352	0	12352	8029	0	8029	10293	0	10293	6793	0	6793	8235	0	8235	5517	0	5517
	65	4252	0	4252	2764	0	2764	3543	0	3543	2338	0	2338	2835	0	2835	1899	0	1899
	60	0	0	0	0	0	0	0	0	0	0	0	0	0	0	0	0	0	0

ERVF·5* 5-Ton Winter Heating Performance

(INDOOR DESIGN CONDITIONS 70°F DB)

Ambient O.D.	VENTILATION RATE								
	450 CFM 80% EFF.			375 CFM 81% EFF.			300 CFM 82% EFF.		
DB/°F	VLT	HR	VL	VLT	HR	VL	VLT	HR	VL
65	2430	1944	486	2025	1640	385	1620	1328	292
60	4860	3888	972	4050	3281	770	3240	2657	583
55	7290	5832	1458	6075	4921	1154	4860	3985	875
50	9720	7776	1944	8100	6561	1539	6480	5314	1166
45	12150	9720	2430	10125	8201	1924	8100	6642	1458
40	14580	11664	2916	12150	9842	2309	9720	7970	1750
35	17010	13608	3402	14175	11482	2693	11340	9299	2041
30	19440	15552	3888	16200	13122	3078	12960	10627	2333
25	21870	17496	4374	18225	14762	3463	14580	11956	2624
20	24300	19440	4860	20250	16403	3848	16200	13284	2916
15	26730	21384	5346	22275	18043	4232	17820	14612	3208
10	29160	23328	5832	24300	19683	4617	19440	15941	3499
5	31590	25272	6318	26325	21323	5002	21060	17269	3791
0	34020	27216	6804	28350	22964	5387	22680	18598	4082
-5	36450	29160	7290	30375	24604	5771	24300	19926	4374
-10	38880	31104	7776	32400	26244	6156	25920	21254	4666

LEGEND:

VLT = Ventilation Load - Total
VLS = Ventilation Load - Sensible
VLL = Ventilation Load - Latent
HRT = Heat Recovery - Total
HRS = Heat Recovery - Sensible
HRL = Heat Recovery - Latent

Electrical Specifications - Standard Heat Pumps

MODEL	Rated Volts & Phase	No. Field Power Circuits	Single Circuit				Dual Circuit							
			① Minimum Circuit Ampacity	② Maximum External Fuse or Ckt. Brkr.	⑤ Field Power Wire Size	⑤ Ground Wire	① Minimum Circuit Ampacity		② Maximum External Fuse or Ckt. Breaker		⑤ Field Power Wire Size		⑤ Ground Wire Size	
							Ckt. A	Ckt. B	Ckt. A	Ckt. B	Ckt. A	Ckt. B	Ckt. A	Ckt. B
W18H2-A00, A0Z	230/208-1	1	16	20	12	12								
A04		1	37	40	8	10								
A08		1	58	60	6	10								
W24H2-A00, A0Z	230/208-1	1	24	25	10	10								
A04		1	44	45	8	10								
A08		1 or 2	65	70	6	8	44	21	45	25	8	10	10	10
W24H2-B00, B0Z	230/208-3	1	17	20	12	12								
B06		1	35	40	8	10								
W24H2-C00, C0Z	460-3	1	11	15	14	14								
C06		1	21	25	10	10								
W30H2-A00, A0Z*	230/208-1	1	24	35	8	10								
A05*		1	50	50	8	10								
A10*		1 or 2	76	80	4	8	50	26	50	30	8	10	10	10
W30H2-B00, B0Z*	230/208-3	1	18	25	10	10								
B06		1	36	40	8	10								
B09*		1	45	45	8	10								
W30H2-C00, C0Z*	460-3	1	11	15	14	14								
C06		1	20	20	12	12								
C09*		1	25	25	10	10								
③ C15		1	26	30	10	10								
W36H2-A00, A0Z*	230/208-1	1	29	40	8	10								
A05		1	55	60	6	10								
A10*		1 or 2	81	90	4	8	55	26	60	30	6	10	10	10
④ A15		1 or 2	84	90	4	8	55	52	60	60	6	6	10	10
W36H2-B00, B0Z*	230/208-3	1	23	30	10	10								
B06		1	41	45	8	10								
B09*		1	50	50	8	10								
③ B15		1	51	60	8	10								
W36H2-C00, C0Z*	460-3	1	12	15	14	14								
C06		1	21	25	10	10								
C09*		1	25	25	10	10								
③ C15		1	26	30	10	10								
W42H2-A00, A0Z	230/208-1	1	36	50	8	10								
A04		1	57	60	6	10								
A05		1 or 2	62	70	6	8	36	26	50	30	8	10	10	10
A10		1 or 2	88	90	3	8	36	52	50	60	8	6	10	10
④ A15		1 or 2	88	90	3	8	36	52	50	60	8	6	10	10
W42H2-B00, B0Z	230/208-3	1	26	35	8	10								
B06		1	44	50	8	10								
B09		1	53	60	6	10								
③ B15		1	53	60	6	10								
W42H2-C00, C0Z	460-3	1	13	15	14	14								
C06		1	22	25	10	10								
C09		1	26	30	10	10								
③ C15		1	26	30	10	10								
W48H2-A00, A0Z	230/208-1	1	37	50	8	10								
A04		1	58	60	6	10								
A05		1 or 2	63	70	6	8	37	26	50	30	8	10	10	10
A10		1 or 2	89	90	3	8	37	52	50	60	8	6	10	10
④ A15		1 or 2	89	90	3	8	37	52	50	60	8	6	10	10
④ A20		1 or 2	111	125	2	6	59	52	60	60	6	6	10	10
W48H2-B00, B0Z	230/208-3	1	29	35	8	10								
B06		1	47	50	8	10								
B09		1	56	60	6	10								
③ B15		1	56	60	6	10								
③ B18		2	N/A	N/A	N/A	N/A	34	28	40	30	8	10	10	10
W48H2-C00, C0Z	460-3	1	14	20	12	12								
C09		1	27	30	10	10								
③ C15		1	27	30	10	10								
W60H2-A00, A0Z	230/208-1	1	41	60	8	10								
A05		1 or 2	67	80	4	8	41	26	60	30	8	10	10	10
A10		1 or 2	93	100	3	8	41	52	60	60	8	6	10	10
④ A15		1 or 2	93	100	3	8	41	52	60	60	8	6	10	10
④ A20		1 or 2	111	125	2	6	59	52	60	60	6	6	10	10
W60H2-B00, B0Z	230/208-3	1	28	40	8	10								
B09		1	55	60	6	10								
③ B15		1	55	60	6	10								
③ B18		2	N/A	N/A	N/A	N/A	34	28	40	30	8	10	10	10
W60H2-C00, C0Z	460-3	1	15	20	12	12								
C09		1	28	30	10	10								
③ C15		1	28	30	10	10								

① These "Minimum Circuit Ampacity" values are to be used for sizing the field power conductors. Refer to the National Electrical Code (latest version), Article 310 for power conductor sizing. **CAUTION:** When more than one field power circuit is run through one conduit, the conductors must be derated. Pay special attention to note 8 of Table 310 regarding Ampacity Adjustment Factors when more than three (3) conductors are in a raceway.

② Maximum size of the time delay fuse or circuit breaker for protection of field wiring conductors.

③ Maximum KW that can operate with the heat pump on is 9KW. Full heat available during emergency heat mode.

④ Maximum KW that can operate with the heat pump on is 10KW. Full heat available during emergency heat mode.

⑤ Based on 75°C copper wire. All wiring must conform to the National Electrical Code and all local codes.

* Available factory-built only with top outlet supply as an option.

IMPORTANT: While this electrical data is presented as a guide, it is important to electrically connect properly sized fuses & conductor wires in accordance with the National Electrical Code & all local codes.

Electrical Specifications - Dehumidification Models

MODEL	Rated Volts & Phase	No. Field Power Circuits	Single Circuit				Dual Circuit							
			① Minimum Circuit Ampacity	② Maximum External Fuse or Ckt. Brkr.	③ Field Power Wire Size	③ Ground Wire	① Minimum Circuit Ampacity		② Maximum External Fuse or Ckt. Breaker		③ Field Power Wire Size		③ Ground Wire Size	
							Ckt. A	Ckt. B	Ckt. A	Ckt. B	Ckt. A	Ckt. B	Ckt. A	Ckt. B
W24H2DA00, A0Z	230/208-1	1	24	30	10	10								
A04		1	44	45	8	10								
A08		1 or 2	65	70	6	8	44	21	45	25	8	10	10	10
W24H2DB00, B0Z	230/208-3	1	17	20	12	12								
B06		1	35	40	8	10								
W24H2DC00, C0Z	460-3	1	12	15	14	14								
C06		1	21	25	10	10								
W30H2DA00, A0Z	230/208-1	1	27	35	8	10								
A05		1	52	60	6	10								
A10		1 or 2	79	80	4	8	52	26	60	30	6	10	10	10
W30H2DB00, B0Z	230/208-3	1	19	25	10	10								
B06		1	37	40	8	10								
B09		1	47	50	8	10								
W30H2DC00, C0Z	460-3	1	12	15	14	14								
C06		1	21	25	10	10								
C09		1	26	30	10	10								
W36H2DA00, A0Z	230/208-1	1	30	40	10	10								
A05		1	56	60	6	10								
A10		1 or 2	82	90	4	8	55	26	60	30	6	10	10	10
W36H2DB00, B0Z	230/208-3	1	24	30	10	10								
B06		1	42	50	8	10								
B09		1	51	60	6	10								
W36H2DC00, C0Z	460-3	1	12	15	14	14								
C06		1	21	25	10	10								
C09		1	25	25	10	10								
W42H2DA00, A0Z	230/208-1	1	40	60	8	10								
A05		1 or 2	66	70	6	8	40	26	50	30	8	10	10	10
A10		1 or 2	92	100	3	8	40	52	50	60	8	6	10	10
W42H2DB00, B0Z	230/208-3	1	28	40	8	10								
B06		1	46	50	8	10								
B09		1	55	60	6	10								
W42H2DC00, C0Z	460-3	1	14	20	12	12								
C06		1	23	25	10	10								
C09		1	27	30	10	10								
W48H2DA00, A0Z	230/208-1	1	38	50	8	10								
A05		1 or 2	64	80	6	8	38	26	50	30	8	10	10	10
A10		1 or 2	90	90	3	8	38	52	60	60	8	6	10	10
W48H2DB00, B0Z	230/208-3	1	29	35	8	10								
B06		1	47	50	8	10								
B09		1	56	60	6	10								
W48H2DC00, C0Z	460-3	1	14	20	12	12								
C09		1	27	30	10	10								
W60H2DA00, A0Z	230/208-1	1	41	60	8	10								
A05		1 or 2	67	80	4	8	41	26	60	60	8	10	10	10
A10		1 or 2	93	100	3	8	41	52	60	60	8	6	10	10
W60H2DB00, B0Z	230/208-3	1	28	40	8	10								
B09		1	55	60	6	10								
W60H2DC00, C0Z	460-3	1	15	20	12	12								
C09		1	28	30	10	10								

① These "Minimum Circuit Ampacity" values are to be used for sizing the field power conductors. Refer to the National Electrical Code (latest version), Article 310 for power conductor sizing. **CAUTION:** When more than one field power circuit is run through one conduit, the conductors must be derated. Pay special attention to note 8 of Table 310 regarding Ampacity Adjustment Factors when more than three (3) conductors are in a raceway.

② Maximum size of the time delay fuse or circuit breaker for protection of field wiring conductors.

③ Based on 75°C copper wire. All wiring must conform to the National Electrical Code and all local codes.

IMPORTANT: While this electrical data is presented as a guide, it is important to electrically connect properly sized fuses & conductor wires in accordance with the National Electrical Code & all local codes.

Indoor Blower Performance · CFM at 230 or 460 Volts

ESP in H_2O	W18H2		W24H2	W30H2 / W36H2		W42H2 / W48H2		W60H2	
	High Speed Dry/Wet Coil	**Low Speed** Dry/Wet Coil	**Single Speed** Dry/Wet Coil	**High Speed** Dry/Wet Coil	Low Speed Dry/Wet Coil	**High Speed** Dry/Wet Coil	Low Speed Dry/Wet Coil	**High Speed** Dry/Wet Coil	Low Speed Dry/Wet Coil
0.0	1020/975	750/700	1020/975	1395/1315	950/935	1885/1800	1650/1600	2200/2000	1600/1450
0.1	960/905	735/675	960/905	1340/1270	930/915	1770/1665	1550/1500	2100/1900	1525/1375
0.2	865/800	710/650	865/800	1285/1190	910/885	1635/1550	1450/1400	2000/1800	1465/1200
0.3	820/735	660/600	820/735	1205/1100	855/830	1500/1400	1350/1300	1875/1700	-/-
0.4	735/650	605/550	735/650	1110/1000	800/755	1370/1285	1300/1175	1775/1600	-/-
0.5	615/535	540/490	615/535	1005/870	-/-	1250/1150	-/-	1650/1475	-/-

Above data is with 1" standard throwaway filter and 1" washable filter.
For optional 2" pleated filter - reduce ESP by .15 in.
See installation instructions for maximum ESP information on various KW applications.

Speeds marked "bold" above are **Factory Connected**.

Electric Heat Table····Refer to Electrical Specifications for Availability by Unit Model

Nominal KW	At 240V (1)				At 208V (1)				At 480V (2)			At 460V (2)		
	KW	1-Ph Amps	3-Ph Amps	Btuh	KW	1-Ph Amps	3-Ph Amps	Btuh	KW	3-Ph Amps	Btuh	KW	3-Ph Amps	Btuh
4.0	4.0	16.7		13,652	3.00	14.4		10,239						
5.0	5.0	20.8		17,065	3.75	18.0		12,799						
6.0	6.0		14.4	20,478	4.50		12.5	15,359	6.0	7.2	20,478	5.52	6.9	18,840
8.0	8.0	33.3		27,304	6.00	28.8		20,478						
9.0	9.0		21.7	30,717	6.75		18.7	23,038	9.0	10.8	30,717	8.28	10.4	28,260
10.0	10.0	41.7		34,130	7.50	36.1		25,598						
15.0	15.0	62.5	36.1	51,195	11.25	54.1	31.2	38,396	15.0	18.0	51,195	13.80	17.3	47,099
18.0	18.0		43.3	61,434	13.50		37.5	46,076	18.0	21.7	61,434	16.56	20.8	56,519
20.0	20.0	83.3		68,260	15.00	72.1		51,195						

(1) These electric heaters are available in 230/208V units only.

(2) These electric heaters are available in 480V units only.

Heater Packages · Field Installed

- Designed for adding Electric Heat to 0 KW Units
- Circuit Breaker Standard on 230/208V Models
- ETL US & Canada Listed
- Toggle Disconnect Standard on 460V Models

Air Conditioner Models	-A00 Models 230/208-1		-B00 Models 230/208-3		-C00 Models 460-3	
	Heater Model #	KW	Heater Model #	KW	Heater Model #	KW
W18H2	EHWH02A-A04B EHWH02A-A08B	4 8	N/A		N/A	
W24H2	EHW24H-A04B EHW24H-A08B	4 8	EHW24H-B06B	6	EHWH24B-C06	6
W30H2	EHWH30-A05B EHWH30-A10B	5 10	EHWH03-B06B EHWH03-B09B	6 9	EHWC03A-C06 EHWC03A-C09 EHWH03A-C15 *	6 9 15
W36H2	EHWH36-A05B EHWH36-A10B EHWH36-A15B *	5 10 15	EHW36H-B06B EHWH03-B09B EHW36H-B15B *	6 9 15	EHWC03A-C06 EHWC03A-C09 EHWH03A-C15 *	6 9 15
W42H2	EHWH04-A04B EHWH42-A05B EHWH42-A10B EHWH42-A15B *	4 5 10 15	EHWH05-B06B EHWH05-B09B EHWH05-B15B *	6 9 15	EHWH42-C06 EHWH05A-C09 EHWH05A-C15 *	6 9 15
W48H2	EHWH04-A04B EHWH42-A05B EHWH42-A10B EHWH42-A15B * EHWH04-A20B *	4 5 10 15 20	EHWH05-B06B EHWH05-B09B EHWH05-B15B * EHW05H-B18B *	6 9 15 18	EHWH05A-C09 EHWH05A-C15 *	9 15
W60H2	EHWH04-A05B EHWH04-A10B EHWH04-A15B * EHWH04-A20B *	5 10 15 20	EHWH05-B09B EHWH05-B15B * EHW05H-B18B *	9 15 18	EHWH05A-C09 EHWH05A-C15 *	9 15

NOTE: Field installed heater packages are not approved for use with top supply opening models.
* Not available for dehumidification models.

Cooling Application Data · Outdoor Temperature °F ①

Model	Return Air (DB/WB) ②	Cooling Capacity	75°F	80°F	85°F	90°F	95°F	100°F	105°F	110°F	115°F	120°F
W18H2	75/62	Total Cooling	17,900	17,000	16,200	15,300	14,300	13,500	12,600	11,700	10,800	9,900
		Sensible Cooling	14,300	13,900	13,600	13,200	12,800	12,400	12,000	11,600	10,800	9,900
	80/67	Total Cooling	19,100	18,500	17,900	17,200	16,400	15,700	14,800	13,900	13,000	12,000
		Sensible Cooling	13,800	13,600	13,400	13,200	12,900	12,600	12,300	11,900	11,600	11,200
	85/72	Total Cooling	22,800	21,700	20,600	19,500	18,300	17,200	16,000	14,800	13,700	12,500
		Sensible Cooling	14,200	13,800	13,500	13,100	12,700	12,200	11,800	11,200	10,700	10,200
W24H2	75/62	Total Cooling	27,100	25,100	23,400	21,800	20,400	19,300	18,300	17,400	16,700	16,000
		Sensible Cooling	20,700	19,800	19,000	18,300	17,700	17,100	16,600	16,100	15,700	15,300
	80/67	Total Cooling	28,900	27,300	25,900	24,600	23,400	22,400	21,500	20,700	20,000	19,400
		Sensible Cooling	20,000	19,400	18,800	18,300	17,800	17,400	17,000	16,600	16,300	16,000
	85/72	Total Cooling	34,500	31,900	29,800	27,800	26,000	24,500	23,200	22,100	21,000	20,200
		Sensible Cooling	20,500	19,700	18,900	18,200	17,500	16,900	16,200	15,600	15,000	14,500
W30H2	75/62	Total Cooling	31,900	30,300	28,800	27,400	26,000	24,700	23,400	22,200	21,000	19,800
		Sensible Cooling	24,800	24,200	23,700	23,000	22,400	21,700	21,200	20,400	19,800	19,100
	80/67	Total Cooling	34,000	33,000	32,000	30,900	29,800	28,700	27,600	26,400	25,200	24,000
		Sensible Cooling	24,000	23,700	23,400	23,000	22,600	22,100	21,700	21,100	20,600	20,000
	85/72	Total Cooling	40,500	38,600	36,800	34,900	33,100	31,400	29,800	28,100	26,500	25,000
		Sensible Cooling	24,600	24,100	23,500	22,900	22,200	21,400	20,700	19,800	19,000	18,100
W36H2	75/62	Total Cooling	35,800	34,400	33,000	31,600	30,200	28,900	27,500	26,100	24,800	23,500
		Sensible Cooling	28,600	28,000	27,300	26,600	25,900	25,200	24,500	23,800	23,100	22,400
	80/67	Total Cooling	38,200	37,500	36,600	35,700	34,600	33,600	32,400	31,100	29,800	28,400
		Sensible Cooling	27,700	27,400	27,000	26,600	26,100	25,600	25,100	24,600	24,000	23,400
	85/72	Total Cooling	45,500	43,900	42,100	40,300	38,500	36,800	35,000	33,100	31,300	29,500
		Sensible Cooling	28,400	27,800	27,200	26,400	25,600	24,800	23,900	23,100	22,100	21,200
W42H2	75/62	Total Cooling	46,500	43,600	41,000	38,700	36,600	34,900	33,200	32,000	30,800	29,900
		Sensible Cooling	36,200	35,100	34,000	33,200	32,400	31,700	31,100	30,600	30,200	29,900
	80/67	Total Cooling	49,600	47,500	45,500	43,700	42,000	40,600	39,200	38,100	37,100	36,200
		Sensible Cooling	35,100	34,400	33,700	33,200	32,700	32,200	31,900	31,600	31,400	31,300
	85/72	Total Cooling	59,100	55,600	52,300	49,400	46,700	44,400	42,300	40,600	39,000	37,600
		Sensible Cooling	36,000	34,900	33,900	33,000	32,100	31,200	30,400	29,600	28,900	28,300
W48H2	75/62	Total Cooling	49,200	46,800	44,500	42,300	40,100	38,000	36,000	34,000	32,100	30,200
		Sensible Cooling	39,100	38,200	37,200	36,200	35,300	34,300	33,400	32,500	31,700	30,200
	80/67	Total Cooling	52,500	51,000	49,400	47,800	46,000	44,300	42,400	40,500	38,600	36,600
		Sensible Cooling	37,900	37,400	36,800	36,200	35,600	34,900	34,300	33,600	33,000	32,300
	85/72	Total Cooling	62,600	59,600	56,700	54,000	51,100	48,500	45,700	43,100	40,600	38,000
		Sensible Cooling	38,800	38,000	37,000	36,000	34,900	33,800	32,700	31,500	30,400	29,200
W60H2	75/62	Total Cooling	56,800	54,300	52,000	49,600	47,000	44,600	42,100	39,700	37,100	34,500
		Sensible Cooling	43,800	42,700	41,600	40,400	39,300	38,100	37,000	35,800	34,700	33,400
	80/67	Total Cooling	60,600	59,200	57,700	56,000	54,000	52,000	49,700	47,300	44,600	41,800
		Sensible Cooling	42,500	41,800	41,200	40,400	39,600	38,800	37,900	37,000	36,100	35,000
	85/72	Total Cooling	72,200	69,200	66,300	63,200	60,000	56,900	53,600	50,300	46,900	43,400
		Sensible Cooling	43,500	42,400	41,400	40,100	38,900	37,600	36,100	34,700	33,300	31,600

Capacity Multiplier Factors			
% of Rated Airflow	-10	Rated	+10
Total BTUH	0.975	1.0	1.02
Sensible BTUH	0.950	1.0	1.05

① Below 65°F, unit requires a factory or field installed low ambient control.
② Return air temperature °F.

Heating Application Rating and Outdoor Temperature °F *

MODEL		0°	5°	10°	15°	20°	25°	30°	35°	40°	45°	50°	55°	60°F	65°F
W18H2	BTUH	4,700	6,000	7,300	8,500	9,500	10,200	11,000	11,700	13,800	15,800	17,400	18,700	19,900	21,200
	WATTS	1,480	1,500	1,520	1,540	1,540	1,540	1,540	1,540	1,590	1,630	1,660	1,680	1,700	1,720
	COP	0.94	1.18	1.41	1.62	1.81	1.95	2.10	2.23	2.55	2.85	3.08	3.27	3.43	3.62
W24H2	BTUH	8,400	10,000	11,700	13,400	14,300	14,700	15,100	15,500	19,100	22,600	25,000	26,700	28,400	30,000
	WATTS	2,040	2,080	2,110	2,150	2,170	2,170	2,170	2,170	2,270	2,360	2,420	2,460	2,500	2,540
	COP	1.21	1.41	1.63	1.83	1.94	1.99	2.04	2.10	2.47	2.81	3.03	3.19	3.33	3.47
W30H2	BTUH	10,200	12,200	14,200	16,200	17,700	18,800	19,900	21,000	24,400	27,700	30,200	32,200	34,200	36,200
	WATTS	2,460	2,500	2,540	2,580	2,600	2,600	2,590	2,590	2,700	2,800	2,860	2,900	2,940	2,980
	COP	1.22	1.43	1.64	1.84	2.00	2.12	2.26	2.38	2.65	2.90	3.10	3.26	3.41	3.56
W36H2	BTUH	13,100	15,400	17,800	20,100	21,500	22,300	23,100	23,900	28,500	33,200	36,400	38,800	41,100	43,400
	WATTS	2,800	2,850	2,900	2,950	2,970	2,970	2,970	2,970	3,090	3,220	3,300	3,350	3,400	3,450
	COP	1.38	1.59	1.80	2.00	2.13	2.20	2.28	2.36	2.71	3.03	3.24	3.40	3.55	3.69
W42H2	BTUH	15,400	18,200	21,100	23,900	25,400	26,100	26,700	27,400	33,500	39,600	43,700	46,600	49,400	52,200
	WATTS	3,460	3,540	3,620	3,690	3,740	3,760	3,780	3,800	3,960	4,130	4,240	4,320	4,390	4,470
	COP	1.31	1.51	1.71	1.90	1.99	2.04	2.07	2.12	2.48	2.81	3.02	3.17	3.30	3.43
W48H2	BTUH	15,800	18,800	21,800	24,800	26,500	27,300	28,100	28,900	35,200	41,500	45,800	48,800	51,800	54,800
	WATTS	3,560	3,620	3,670	3,730	3,750	3,760	3,770	3,770	3,900	4,030	4,110	4,160	4,220	4,270
	COP	1.31	1.53	1.75	1.95	2.08	2.13	2.19	2.25	2.65	3.02	3.27	3.44	3.6	3.77
W60H2	BTUH	19,600	23,200	26,900	30,600	32,300	32,800	33,300	33,800	42,200	50,700	56,200	59,900	63,600	67,200
	WATTS	4,320	4,410	4,490	4,580	4,620	4,630	4,650	4,660	4,850	5,050	5,170	5,260	5,340	5,430
	COP	1.33	1.55	1.76	1.96	2.05	2.08	2.10	2.13	2.55	2.95	3.19	3.34	3.49	3.63

*70°F DB indoor return air at rated CFM includes defrost operation below 45°.

Clearances Required for Service Access and Adequate Condenser Inlet Airflow

MODELS	LEFT SIDE	RIGHT SIDE
W18H2, W24H2, W30H2, W36H2	15"	20"
W42H2, W48H2, W60H2	20"	20"

Minimum Clearances Required to Combustible Materials

MODELS ①	SUPPLY AIR DUCT FIRST THREE FEET	CABINET
W18H2, W24H2	0"	0"
W30H2, W36H2	1/4"	0"
W42H2, W48H2, W60H2	1/4"	0"

① Refer to the Installation Manual for more detailed information.

Dimensions of W18-60H Basic Unit for Architectural & Installation Requirements (Nominal)

MODEL	WIDTH (W)	DEPTH (D)	HEIGHT (H)	SUPPLY		RETURN																	
				A	B	C	B	E	F	G	I	J	K	L	M	N	O	P	Q	R	S1	S2	T
W18H2 W24H2	33.300	17.125	70.563	7.88	19.88	11.88	19.88	35.00	10.88	25.75	20.56	26.75	28.06	29.25	27.00	2.63	34.13	22.06	10.55	5.00	12.00	12.00	5.00
W30H2 W36H2	38.200	17.125	70.563	7.88	27.88	13.88	27.88	40.00	10.88	25.75	17.93	26.75	28.75	29.25	27.00	2.63	39.13	22.75	9.14	5.00	12.00	12.00	5.00
W42H2 W48H2	42.075	22.432	84.875	9.88	29.88	15.88	29.88	43.88	13.56	31.66	30.00	32.68	26.94	34.69	32.43	3.37	43.00	23.88	10.00	1.44	16.00	16.00	1.88
W60H2	42.075	22.432	94.875	9.88	29.88	15.88	29.88	43.88	13.56	41.66	30.00	42.68	36.94	44.69	42.43	3.37	43.00	33.88	10.00	1.44	16.00	21.00	1.88

All dimensions are in inches. Dimensional drawings are not to scale.

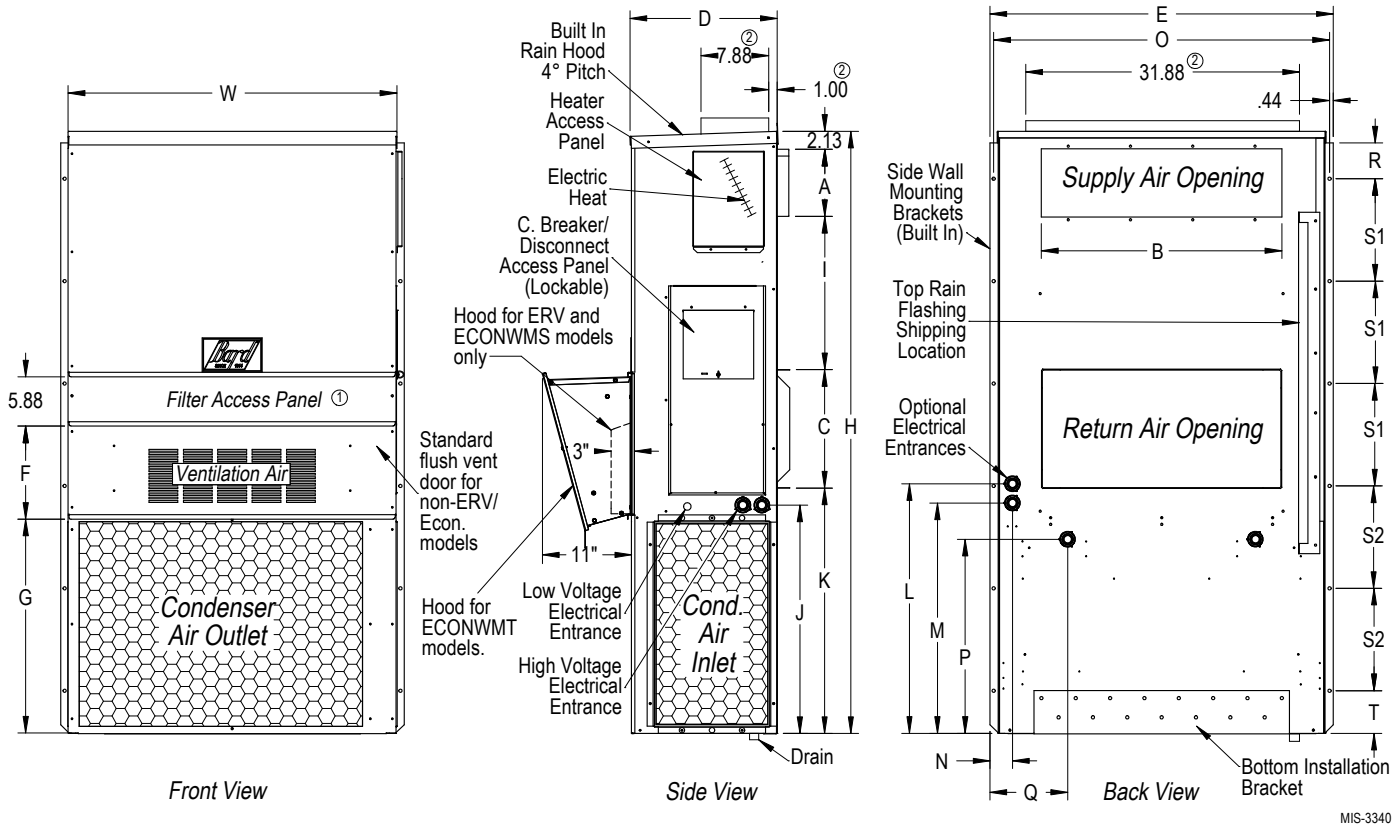

① Not used when ECONWMT Economizers installed. Filter access is through the ECONWMT hood.

② Optional top outlet (factory installed only) in place of standard front supply air opening for W30H and W36H models only.

Heat Pump Wall-Mount Model Nomenclature

W 36 H 2 A 10 X X X X X E

MODEL NUMBER (W)

CAPACITY (36)
18 - 1½ Ton
24 - 2 Ton
30 - 2½ Ton
36 - 3 Ton
42 - 3½ Ton
48 - 4 Ton
60 - 5 Ton

HEAT PUMP (H)

REVISION (2)

SPECIALTY PRODUCTS ② (Non-Standard)

VOLTS & PHASE (A)
A - 230/208/60/1
B - 230/208/60/3
C - 460/60/3

KW ① (10)

VENTILATION OPTIONS (First X)
(See Table Below)

FILTER OPTIONS (Second X)
X - 1 inch Throwaway (Standard)
W - 1 inch Washable
P - 2 inch Pleated (MERV 8)

COLOR OPTIONS (Third X)
X - Beige (Standard)
1 - White
4 - Buckeye Gray
5 - Desert Brown
8 - Dark Bronze

SUPPLY AIR OUTLET (Fourth X)
X - Front (Standard)
T - Top (on W30H2 & W36H2 Models)

COIL OPTIONS (Fifth X)
X - Standard
1 - Phenolic Coated Evaporator
2 - Phenolic Coated Condenser
3 - Phenolic Coated Evaporator and Condenser

CONTROL MODULES (E)
(See Chart Below)

① For 0KW and circuit breakers (230/208 volt) or toggle disconnects (460 volt) applications, insert 0Z in the KW field of the model number.
② Insert "D" for dehumidification with hot gas reheat. Not available for Model W18H. Reference Form 7960-576 for complete details.

Ventilation Options

Models	W18H2, W24H2		W30H2, W36H2		W42H2, W48H2, W60H2	
Description	Factory Installed Code No.	Field Installed Part No.	Factory Installed Code No.	Field Installed Part No.	Factory Installed Code No.	Field Installed Part No.
Barometric Fresh Air Damper - Standard	X	BFAD-2	X	BFAD-3	X	BFAD-5
Blank-Off Plate	B	BOP-2	B	BOP-3	B	BOP-5
Motorized Fresh Air Damper	M	MFAD-2	M	MFAD-3	M	MFAD-5
Commercial Ventilator - Spring Return w/Exhaust	V	CRV-2	V	CRVS-3	V	CRVS-5
Commercial Ventilator - Power Return w/Exhaust	—	—	P	CRVP-3	P	CRVP-5
Economizer - Standard Versions, Enthalpy ④	S	ECONWMS-E2B ②	S	ECONWMS-E3B ②	S	ECONWMS-E5B ②
Economizer - Equipment Bldg., Enthalpy ⑤	W	ECONWMT-E2B ②	W	ECONWMT-E3B ②	W	ECONWMT-E5B ②
Economizer - Equipment Bldg., DB Temp ⑤	T	ECONWMT-T2B ②	T	ECONWMT-T3B ②	T	ECONWMT-T5B ②
Energy Recovery Ventilator - 230 Volt ③	R	ERVF-A2	R	ERVF-A3 ①	R	ERVF-A5 ①
Energy Recovery Ventilator - 460 Volt ③	R	ERVF-C2 ⑥	R	ERVF-C3 ①	R	ERVF-C5 ①
Door Kit for ERVF (Required)	N/A	WMDK2- ③	N/A	WMDK3- ③	N/A	WMDK5- ③

① Intake and exhaust can be independently adjusted.
② Insert color to match unit ("X" = Beige; "4" = Buckeye Gray; etc.)
③ WMDK Door Kit must be ordered in addition to ERVF Assembly & color matched to unit ("X" = Beige; "4" = Buckeye Gray; etc.)
④ Partial Full Flow (75% of Rated Cooling CFM). All ECONWMS versions have 3" deep intake hood.
⑤ Full Flow (100% of Rated Cooling CFM). All ECONWMT versions have 11" deep intake hood.
⑥ W24H2 Only.

Heat Pump Control Modules - All Models

Low Pressure Control ①	High Pressure Control ①	Low Ambient Control and Relay ②	Start Kit ③	Start Kit ④	Outdoor Thermostat ⑤	**Factory Installed Code**	**Field Installed Part**
STD	STD					X	N/A
STD	STD	●				E	CMH-19
STD	STD				●	Q	CMH-14A
STD	STD	●			●	R	- - -
STD	STD	●	●			S	- - -
STD	STD	●	●		●	T	- - -
STD	STD		●			Field Installed	CMC-15 ③
STD	STD			●		Field Installed	SK111

STD = Standard Equipment
① The high & low pressure controls are auto reset. Operating circuit includes a lockout feature and is resettable from the wall thermostat. All low pressure controls use a timed bypass circuit to prevent nuisance tripping during low temperature start-up.
② The low ambient control includes an 8201-008 (fan relay) and permits cooling operation down to 0°F.
③ PTCR start kit can be used with all -A single phase models. Increases starting torque 2-3x. Not used for -B or -C three phase models. Do not use if SK111 is used.
④ Start capacitor and potential relay start kit can be used with all -A single phase models. Increases starting torque 9x. Not used for -B or -C three phase models. Do not use if CMC-15 is used.
⑤ The outdoor thermostat is adjustable from 0°F to 50°F. It is suitable for use as a compressor cut-off thermostat.

NOTE: Standard heat pump control board has a 5-minute compressor anti-short cycle timer.

Bard SINCE 1914
Climate Control Solutions

Bard Manufacturing Company, Inc.
Bryan, Ohio 43506
www.bardhvac.com

Due to our continuous product improvement policy, all specifications subject to change without notice.

Before purchasing this appliance, read important energy cost and efficiency information available from your retailer.

Form No. S3398
February, 2015
Supersedes S3398-114

Product Applications:

- Busses/School Buses
- Trucks
- Fleet Vehicles
- Emergency Vehicles
- Farm Tractors
- Over The Road Tractors
- Construction Equipment
- Generators
- Pumps
- Excavation Equipment
- Forestry / Timber

One year product warranty.

Diesel Truck Application Example

Saving Energy For Future Generations

Maximum energy conservation and performance.

⇒**Small Package size.**

⇒**Light Weight.**

⇒**All-Weather Outdoor Polycarbonate Enclosure.**

⇒**Plug and Play operation.**

⇒**Simple to program with free BHRcontroller Studio software application.**

ELEproducts.com
152 Rhododendron Drive
P.O. Box 612
Alderson, WV 24910
Phone: 304-445-2718
Fax: 304-445-2463
Email sales@eleproducts.com

Advanced Engine Block Heater Controller

CONTROL-X2

Helping You Save Energy

Features:

- Advanced electronic engine block heater controller provides maximum flexibility for all your needs; where a timer, temperature, or combination timer and temperature controller is desired.
- Temperature control from 4 below zero through 39 degrees F
- One of the most sophisticated controllers on the market today. Designed for heavy duty applications.
- 26 independent timers and 13 thermostatically controlled temperature zones. Mix and match for your specific application requirements.
- Highly flexible, 25 foot cord set with Power-On indicator for all weather applications.
- Plug and play operation that does not require any installation. Replaces existing supply cords with CONTROL-X2 electronic controllers.
- Satisfaction Guaranteed. ELEproducts.com will replace or repair any product which does not provide complete satisfaction.

Inside CONTROL-X2

- 26 independent timers. 4 timers for every day of the week and 3 timers for Saturday and Sunday. Each timer is comprised of on-time and off-time, creating a timed interval event.
- 13 thermostatically controlled temperature zones. Within each zone, users program the controllers duty cycle for each of the 13 temperature zones. Duty cycle is defined as the time in minutes ON and time in minutes OFF. Valid settings are: ALWAYS, NEVER, 1 through 120 minutes.
- POR, or (Power On Reset) function. Users can program: NONE, 30, 60, 90 or 120 minutes. When the controller is plugged into the 120v power source, the controller will turn on for this amount of time. It is top priority and overrides any temperature profile or timer configuration that may be programmed. After the POR interval has elapsed, operation continues as programmed.
- System board mounted red and green LED indicators.
- 25 FOOT, SJTW 14/3, 125V, 15A, cord set with Power-On indicator.
- Replaceable cord set via Amp/Tyco FASTON terminals.
- Extremely accurate time clock with replaceable CR2032, 3V coin cell battery.
- Replaceable 15A, 125VAC, 5x20MM fuse.
- Modular design. In the unfortunate event the controller is subject to unexpected accidental trauma, customers can have only those components damaged replaced.

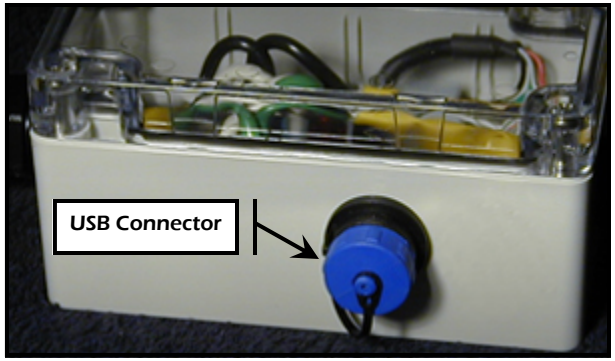

Sealed USB, panel mount connector. Provides water tight connection when used with optional MINI B to A USB cable.

Water Tight Cord Grips: All nylon construction with Buna N Sealing Gland resists water, salt water, weak acids, gasoline, alcohol, oil, grease, and common solvents.

Sealed Cover: Cover lid and gasket is secured with self captivating M4 stainless steel screws, threaded into integral stainless steel bushings.

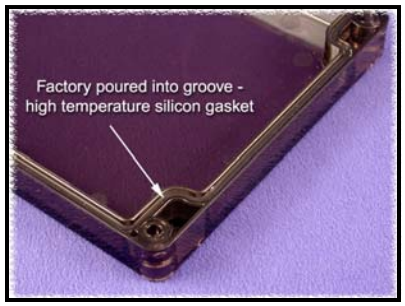

BHRcontroller Studio Software

BHRcontroller Studio software is a free USB application developed by ELEproducts.com. Easily program a single controller or multiple controllers with only a few clicks of a mouse. Programming multiple controllers is streamlined with the applications ability to name, save, and open both temperature and timer configurations on the computer's hard drive.

Supported platforms are: Windows XP, Vista, and Windows-7 (32 and 64 bit).

Visit www.eleproducts.com for additional product details and support.

Optional **BULGIN 2 meter long, MINI B to A USB cable:** Cable provides interface between laptop/desktop computer and CONTROL-series Controllers.

ELEproducts.com
152 Rhododendron Drive
P.O. Box 612
Alderson, WV 24910
Phone: 304-445-2718
Fax: 304-445-2463
Email sales@eleproducts.com

Catalog 628-3

Magnitude®
Magnetic Bearing Centrifugal Chillers

Model WMC, D Vintage
86 to 400 Tons (300 to 1400 kW)
R-134a or R-513A Refrigerant
60/50 Hz

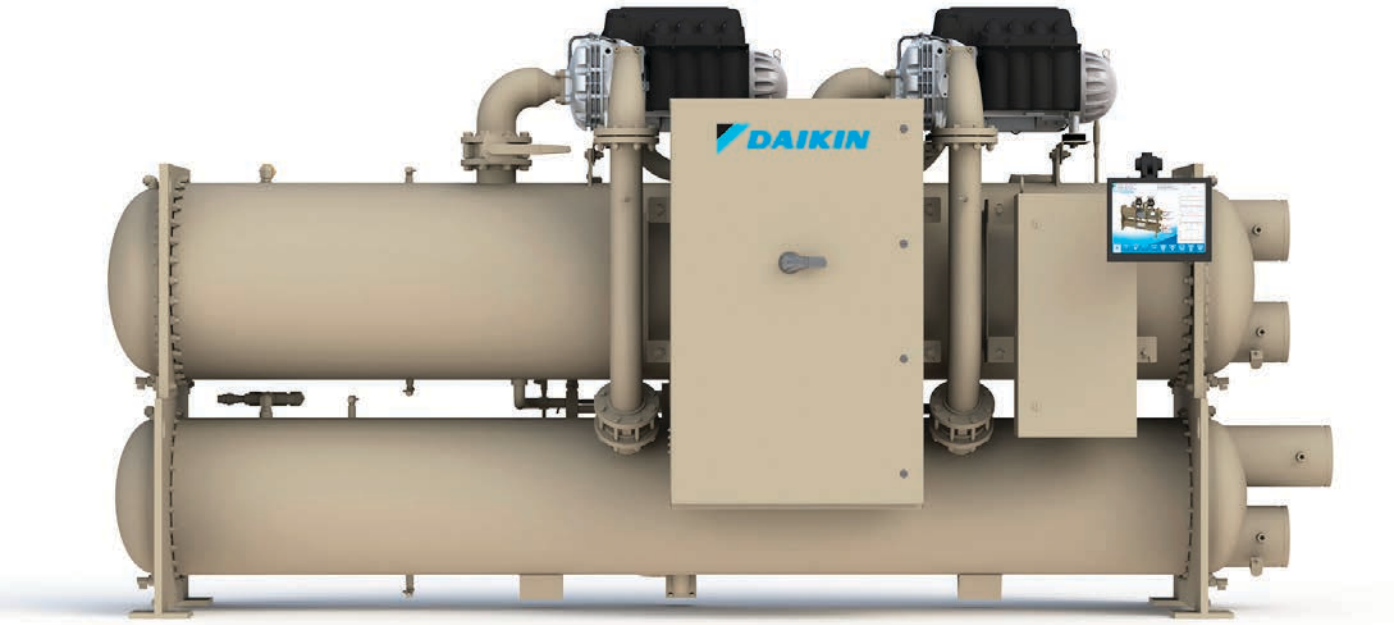

Introduction. 3
Features and Benefits 4
The Compressor Technology 4
Economizer Option 5
Templifier Model 5
Integrated Variable Frequency Drive 5
The Control Technology 5
Certifications and Standards. 6
Dimensions and Weights. 8
Unit Dimensions and Shipping Weight 8
Drawing Notes 10
Options and Accessories 11
Unit Options 11
Vessel Options 11
Controls Options 11
Electrical Options 12
Special Order Options. 12
Refrigeration Diagram 13
Application Considerations. 14
Location Requirements. 14
Vibration Mounting 14
System Design 14
Heat Recovery 14
Condenser 15
Retrofit Knockdown 18
Engineering Guide Specifications 19

Manufactured in an ISO 9001 & ISO 14001 certified facility

*TMC models are outside the scope of WCCL certification program

©2022 Daikin Applied. Illustrations and data cover the Daikin Applied product at the time of publication and we reserve the right to make changes in design and construction at any time without notice.

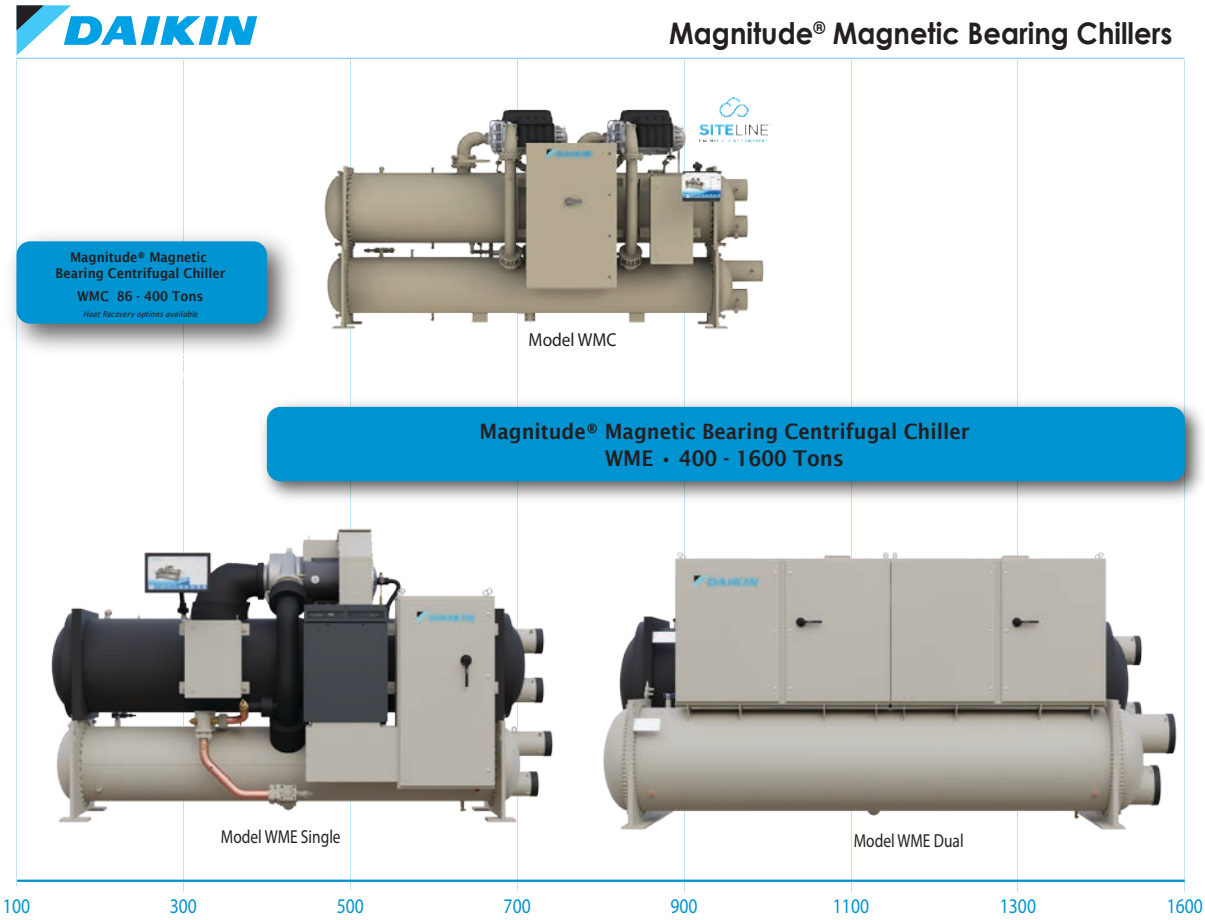

Technology That Just Makes Sense

The industry's next generation of centrifugal chillers is here today with Daikin Magnitude® chillers. This technology incorporates centrifugal compressors utilizing integral variable frequency drives with oil-free operation thanks to magnetic bearings. Direct-drive technology and high efficiency compressor(s) are used in conjunction with highly efficient heat exchangers, as well as other important features including:

- State-of-the-art magnetic bearing compressor with oil-free technology
- Unit-mounted Variable Frequency Drive
- Positive pressure design
- Hermetic, permanent magnet, direct-drive motor
- User-friendly MicroTech® controls
- Open Choices™ controls feature for BAS flexibility
- R-134a or R-513A refrigerant
- AHRI certification

Features and Benefits Summary

The Compressor Technology

- Magnetic bearing system that results in greater efficiency and reliability, more sustainable performance, reduced operating and maintenance costs, and low vibration and sound levels compared to traditional oil centrifugals.
- Heat recovery capability offered with the latest TMC version.

Integrated Variable Frequency Drive (VFD)

- Unit-mounted VFD modulates compressor speed to obtain optimum efficiency at all load and lift conditions.

The Control Technology

- Onboard digital electronics provide smart controls and include a regenerative power system, user-friendly operator interface, RapidRestore® option, and Open Choices™ BAS flexibility.

Certifications and Standards

- Meets ASHRAE Std. 90.1, AHRI 550/590 and IBC/OSHPD Seismic, and contributes to LEED® credits.

Factory Testing

- Ensures trouble free startup and reliable operation.

The Compressor Technology

Model WMC's efficiency and reliability is due to its cutting-edge permanent magnet motor and magnetic bearing compressor technology. A digitally-controlled magnetic bearing system replaces conventional oil lubricated bearings and a direct drive motor eliminates the need for a lubricated gear box. The compressor shaft, shown in Figure 1, levitates on a magnetic cushion and is the compressor's only major moving component. Sensors at each magnetic bearing provide real-time feedback to the bearing control system. As a result of this sophisticated design, model WMC has many advantages over chillers with traditional centrifugal compressors.

Figure 1: Magnetic Bearing Compressor

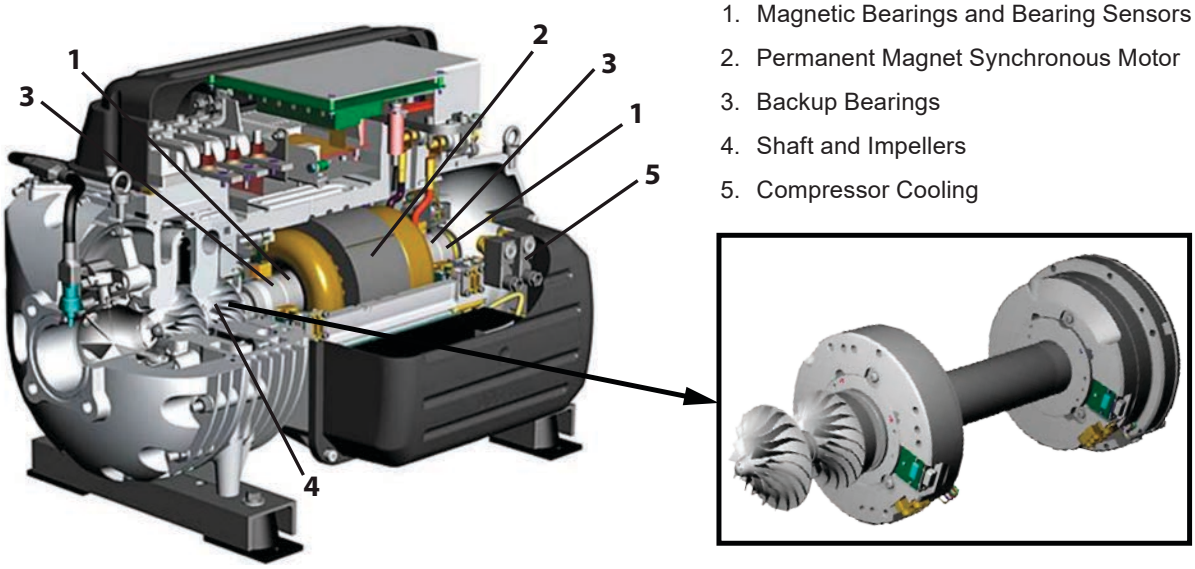

1. Magnetic Bearings and Bearing Sensors
2. Permanent Magnet Synchronous Motor
3. Backup Bearings
4. Shaft and Impellers
5. Compressor Cooling

Oil-Free Compressor Design Benefits

No Oil Management System = Greater Reliability

With magnetic bearings operating in a magnetic field instead of oil-lubricated bearings, the oil handling equipment is removed. No need for:

- oil pumps
- oil reservoirs
- oil coolers
- oil filters
- water regulating valves
- oil relief valves
- oil storage and disposal
- oil system controls, starter, piping, heaters, etc.

that are needed to maintain oil quality. These devices can be a fault source in traditional chillers, and removing them significantly increases unit and system reliability.

No Oil System = Reduced Maintenance Costs

With oil removed from the system, oil samples, oil changes, oil system maintenance, oil filter changes, and leaks are eliminated.

Totally Oil-Free Operation = Greater Efficiency

The use of oil-free magnetic bearing technology significantly increases chiller efficiency by reducing frictional losses within the bearing system.

In addition, efficiency improvements can be realized since there is no oil to coat the heat transfer surfaces.

No Oil Loss = Sustainable Performance

With no possibility of oil loss at light loads or due to worn seals, the original energy saving efficiency can be maintained for the life of the chiller.

No Oil System = Low Vibration & Sound Levels

With the use of magnetic bearings, the compressor vibration levels are extremely low, minimizing vibration that could be transmitted to the structure.

With low vibration levels, sound levels are lower compared to traditional centrifugal chillers.

Additional Compressor Design Benefits

Model WMC's magnetic bearing compressor design offers many benefits not only because of its oil free design but also because of its use of a positive pressure refrigerant and a variable frequency drive.

Low Operating Costs

Model WMC offers world class part load efficiency due to its advanced permanent magnet motor and magnetic bearing VFD compressor design. This allows for significant energy savings at off-design conditions compared to fixed speed chillers. See AHRI Certification on page 6 for more information on part load performance.

Economizer Option

An economizer option is available for improved efficiency. An economizer is a well-proven device to increase a refrigerant circuit's capacity and efficiency. Warm liquid from the condenser is fed into the economizer where it is cooled by flashing off liquid also from the condenser. The flash gas is piped to a compressor interstage point. Lowering the liquid refrigerant temperature to the evaporator decreases its enthalpy (heat content) and results in a greater amount of heat absorption from the chilled water.

Templifier Model

WMC models are now available with a Templifier (TMC) option. Templifier (TMC) Heat Pump Water Heaters are designed to economically turn waste heat into useful heat. Waste heat is extracted from a heat source and sent to the evaporator. The condenser delivers the useful heat for applications such as space heating, domestic hot water heating and process loads. In addition, the advanced MicroTech II controller allows the user to adjust the leaving condenser water temperature setpoint for accurate hot water temperature control.

Commercial and institutional buildings throw away vast amounts of rejected heat from the air-conditioning load to the atmosphere through their cooling towers. TMC can help reduce operating costs by producing chilled water while also providing hot water by recovering wasted heat from the condenser.

TMC units are versatile in their application, producing chilled water while heating by recovering otherwise wasted heat and controlling the leaving condenser water temperature. They are first and foremost economic machines, providing heat at a lower cost than fossil fuels and providing an attractive return on investment

Integrated Variable Frequency Drive

A Variable Frequency Drive (VFD) modulates compressor speed in response to load and evaporator/condenser pressure. When minimum speed is reached, moveable inlet guide vanes redirect the gas flow into the impeller. VFD's have the following benefits:

- Reduced annual energy costs when there are long periods of part load operation and/or low compressor lift (lower condenser water temperature)
- Reduced motor starting inrush current
- Reduced size of backup generators used to provide emergency power to chillers used on mission critical applications
- Increased power factor to reduce utility surcharges

WMC Reduced Harmonic Option

The Institute of Electrical and Electronics Engineers (IEEE) has developed a standard (IEEE519) that defines acceptable limits of site specific system current and voltage distortion. The designer may wish to consult this standard to ensure acceptable levels of harmonic distortion are maintained.

The standard VFD includes 5% line reactors, which dramatically reduce the harmonic distortion. An optional unit-mounted harmonic filter is available for all models to meet lower harmonic level requirements.

The Control Technology

It is only fitting that this revolutionary chiller design be matched with the advanced control technology to provide the ultimate chiller performance. Our control design includes many unique energy-saving features and interface enhancements.

MicroTech® II Controller

The model WMC chiller utilizes MicroTech® II digital control electronics to proactively manage unit operation and provide control of external chilled water and cooling tower pumps. The compressor runs at the minimum speed necessary to maintain cooling capacity and lift (which decreases with lower condenser water temperatures), thus minimizing energy usage over the entire range of operating conditions. By constantly monitoring chiller status and real time data, the MicroTech® II controller will automatically take proactive measures to relieve abnormal conditions or shut the unit down if a fault occurs.

Additional smart features that optimize operating efficiency have been incorporated into our MicroTech® II controls:

- Cooling tower control including on/off, staging, and VFD
- Direct control of water pumps
- Chilled water rest
- Demand limit control
- Ability to stage up to four WMC chillers

Operator Interface

Operation simplicity was one of the main considerations in the development of the MicroTech® II control system. The operator interface is a 15-inch, color touch-screen monitor that is mounted on an adjustable arm. Key operating parameters and setpoints are easily accessible. For added convenience, the unit Operating and Maintenance Manual is also viewable on the touch-screen panel.

In order to track chiller performance, the MicroTech® II controller can record and plot water temperatures, refrigerant pressures, and motor load. These values can be downloaded through a convenient USB port in the interface and exported into a spreadsheet for further evaluation and record purposes. The trend history screen is shown in Figure 2.

Figure 2: Operator Interface Trend History Screen

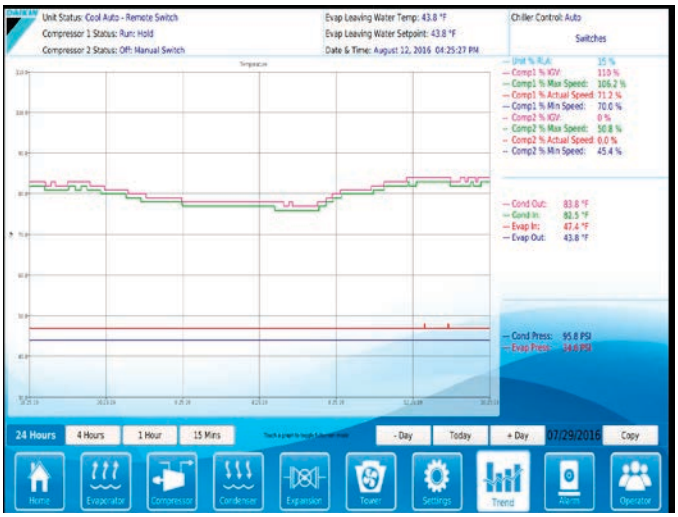

The controller memory (no batteries required) also retains the fault history for troubleshooting and monitoring unit performance. A time/date stamp is associated with each fault. The fault history can be downloaded through the USB port.

RapidRestore®

Mission critical facilities such as data centers and hospitals are demanding stringent capabilities for chillers to restart and reach full load operation quickly in the event of a power loss. With the capability of RapidRestore®, Magnitude® model WMC chillers are engineered to meet those needs. See Table 1 for specifications.

Table 1: WMC RapidRestore® Times- After Power Restoration

Compressor Start	*Fast Loading to 80% Load*
43 sec	120 sec*

* Estimated load time. Times may vary depending on operating conditions.

RapidRestore® – Quickly restores cooling capacity when power is restored after a power failure

- **Compressor Start –** Amount of time required for the chiller to restart
- **Fast Loading –** Amount of time required for the chiller to reach a certain load condition

Open Choices™ BAS Flexibility

The exclusive Open Choices™ feature provides seamless integration and comprehensive monitoring, control, and two-way data exchange using industry standard protocols such as LonTalk®, BACnet® or Modbus®. Open Choices™ offers simple and inexpensive flexibility to use the Building Automation System (BAS) of your choice without an expensive gateway panel. Open Choices™ benefits include:

- Easy to integrate into your BAS of choice
- Factory- or field-installed communications module
- Integrated control logic for factory options
- Easy-to-use local user interface
- Comprehensive data exchange

Certifications and Standards

As with many other Daikin Applied chiller products, the Magnitude® model WMC meets all necessary certifications and standards.

AHRI Certification

Part load performance can be presented in terms of Integrated Part Load Value (IPLV), which is defined by AHRI Standard 550/590. Based on AHRI Standard 550/590, and as shown in Figure 3, a typical chiller can operate up to 99% of the time at off-peak conditions and usually spends most of this time at less than 60% of design capacity.

Figure 3: IPLV Defined by AHRI Standard 550/590

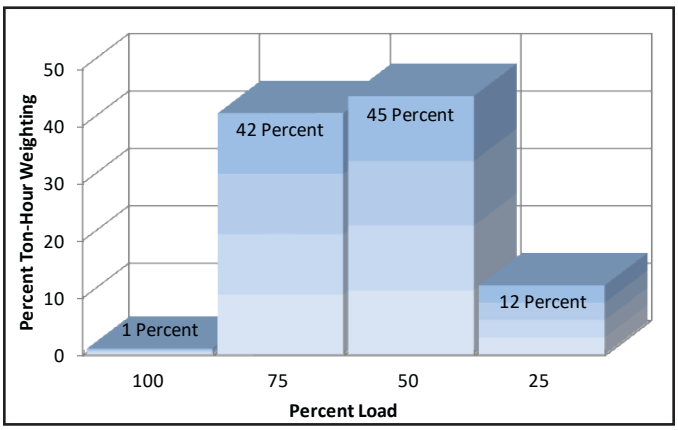

WMC chillers are rated and certified to AHRI Standard 550/590. The ability of the WMC chillers to achieve very high part load efficiencies, as evidenced by their world-class IPLV ratings, is due primarily to the use of a variable frequency drive and the low friction of the magnetic bearing system. For more information on variable frequency drives, see Integrated Variable Frequency Drive on page 5.

Compliance with ASHRAE Std. 90.1

ASHRAE Standard 90.1 was developed to assist owners and designers make informed choices on a building's design, systems, and equipment selection. Model WMC can significantly exceed ASHRAE 90.1 minimum efficiency requirements.

IBC/OSHPD Seismic Certification

Daikin Magnitude® WMC chillers have been tested and certified by an independent agency, experts in seismic analysis and design to meet IBC seismic and OSHPD pre-approval. Find more information about seismic requirements and HVAC systems at www.DaikinApplied.com.

LEED®

For building owners who wish to pursue Leadership in Energy and Environmental Design (LEED®) Green Building Certification, the performance of the WMC may contribute points towards Energy and Atmosphere (EA) Credits.

Points earned for Optimize Energy Performance (formerly EA Credit 1) are awarded based on overall building efficiency. The high efficiency of the WMC will contribute to the total points earned for this credit.

Enhanced Refrigerant Management (formerly EA Credit 4) qualification is partially determined by tonnage and refrigerant quantity. Vessel stack and tube count selections will affect the quantity of refrigerant in the chiller.

Consult with your Daikin Applied sales representative for more information.

The IEEE 519-2014 Standard

The Institute of Electrical and Electronics Engineers (IEEE) has developed a standard that recommends distortion limits for both power utilities and their customers. The purpose of these limits is to ensure that the voltage distortion of the utility's public power grid is maintained at an acceptable level. To accomplish this, IEEE 5192014 presents recommended harmonic current distortion limits for utility customers. These limits are based on the peak demand of the customer. This is called the Total Demand Distortion (TDD). This standard provides a sliding scale for the recommended TDD limit for each utility customer. The greater the demand that a customer places on the utility, the more stringent the recommended TDD limits.
IEEE 519-2014 states that the TDD is to be measured at the point where a utility customer connects to the public utility. It does not apply to any points inside the customer's facility; it only applies to the point where another utility customer could connect to the public power grid. If the utility's customers comply with the TDD limits stated in IEEE 519-2014, it is then the utility's responsibility to provide voltage to its customers that meets the harmonic voltage recommendations of this standard.

Harmonic Distortion Analysis

An electronic calculation worksheet is available from Daikin that is intended to be used as a tool for estimating the Total Demand Distortion of a facility. It projects whether the facility complies with the TDD recommendations of IEEE 519-2014 and allows AC line reactors and/or harmonic filters to be added to the system to model their impact. Daikin can also provide custom harmonic distortion estimations when design data of the system is provided.

Factory Testing

All Daikin Applied centrifugal chillers (50 or 60 hertz) are factory-tested prior to shipment. Operating and safety controls are checked for correct settings and operation. This testing helps reduce field start-up issues and maintain critical construction schedules.

Unit Dimensions

Refer to as-built submittal drawings provided by a Daikin Applied sales representative for additional dimensional and weight data based on specific unit configuration details.

Figure 4: WMC Dual Compressor Unit (2-pass, right-hand configuration, with grooved connections)

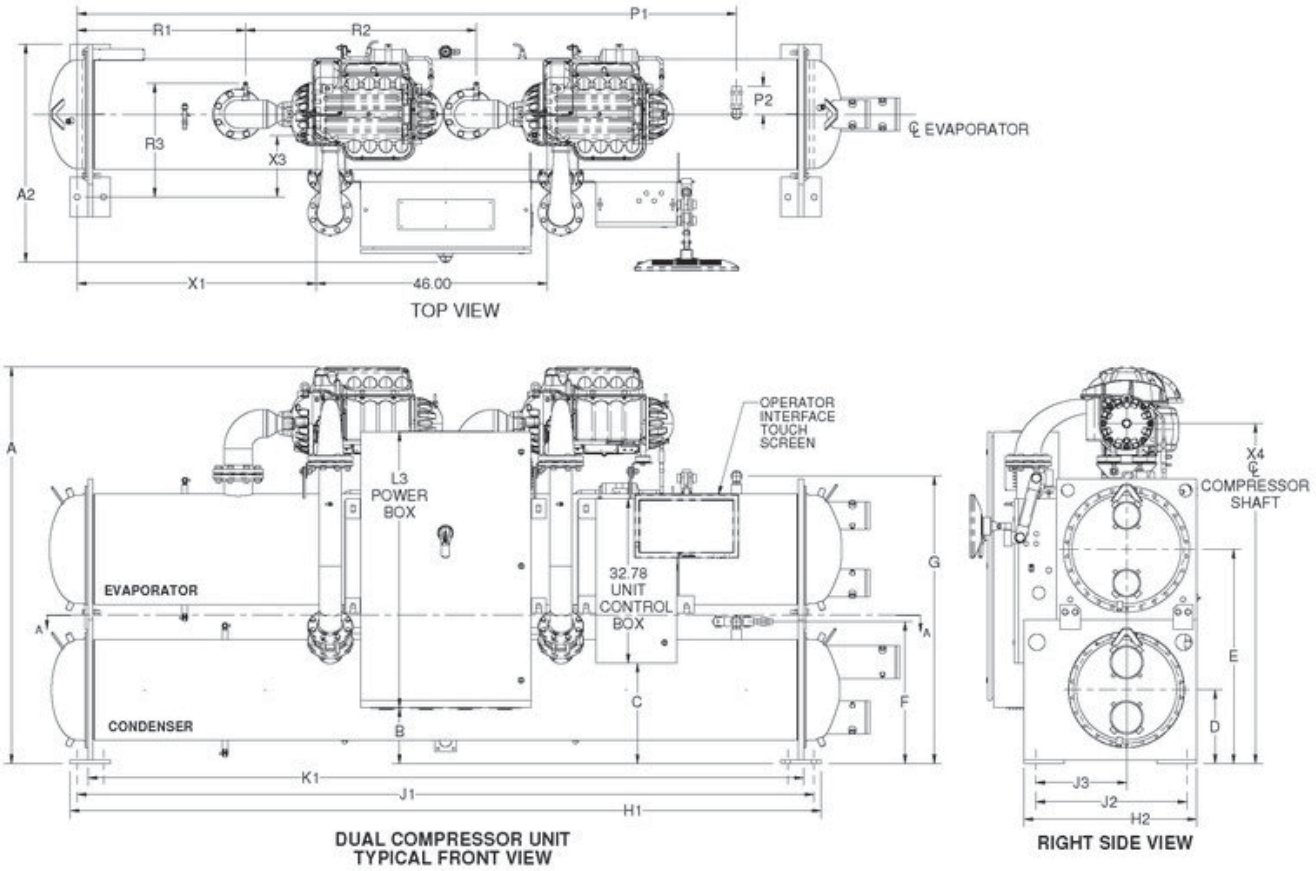

Table 2: WMC Dual Compressor Dimensions

Model	Heat Exchanger	Length in (mm)	Width * in (mm)	Height in (mm)
036D-SN	**E2209/C2009**	134.70 (3421)	43.42 (1103)	79.02 (2007)
036D-SN	**E2212/C2012**	169.59 (4308)	43.42 (1103)	79.02 (2007)
043D-SN	**E2609/C2209**	135.72 (3447)	47.17 (1198)	84.01 (2134)
048D-SN	**E2609/C2209**	135.72 (3447)	47.17 (1198)	84.01 (2134)
043D-SN	**E2612/C2212**	170.61 (4333)	47.17 (1198)	84.01 (2134)
048D-SN	**E2612/C2212**	170.61 (4333)	47.17 (1198)	84.01 (2134)
048D-SE* **	**E2612/C2212**	170.61 (4333)	47.17 (1198)	84.01 (2134)
060D-SN	**E3009/C2609**	137.09 (3402)	55.17 (1401)	94.50 (2400)
060D-SN	**E3012/C2612**	171.98 (4368)	55.17 (1401)	94.50 (2400)
060D-SE* **	**E3012/C2612**	171.98 (4368)	55.17 (1401)	94.50 (2400)

* Width is based on unit without optional harmonic filters.
*** Denotes unit with economizer

Figure 5: WMC Single Compressor Unit (2-pass, right-hand configuration, with grooved connections)

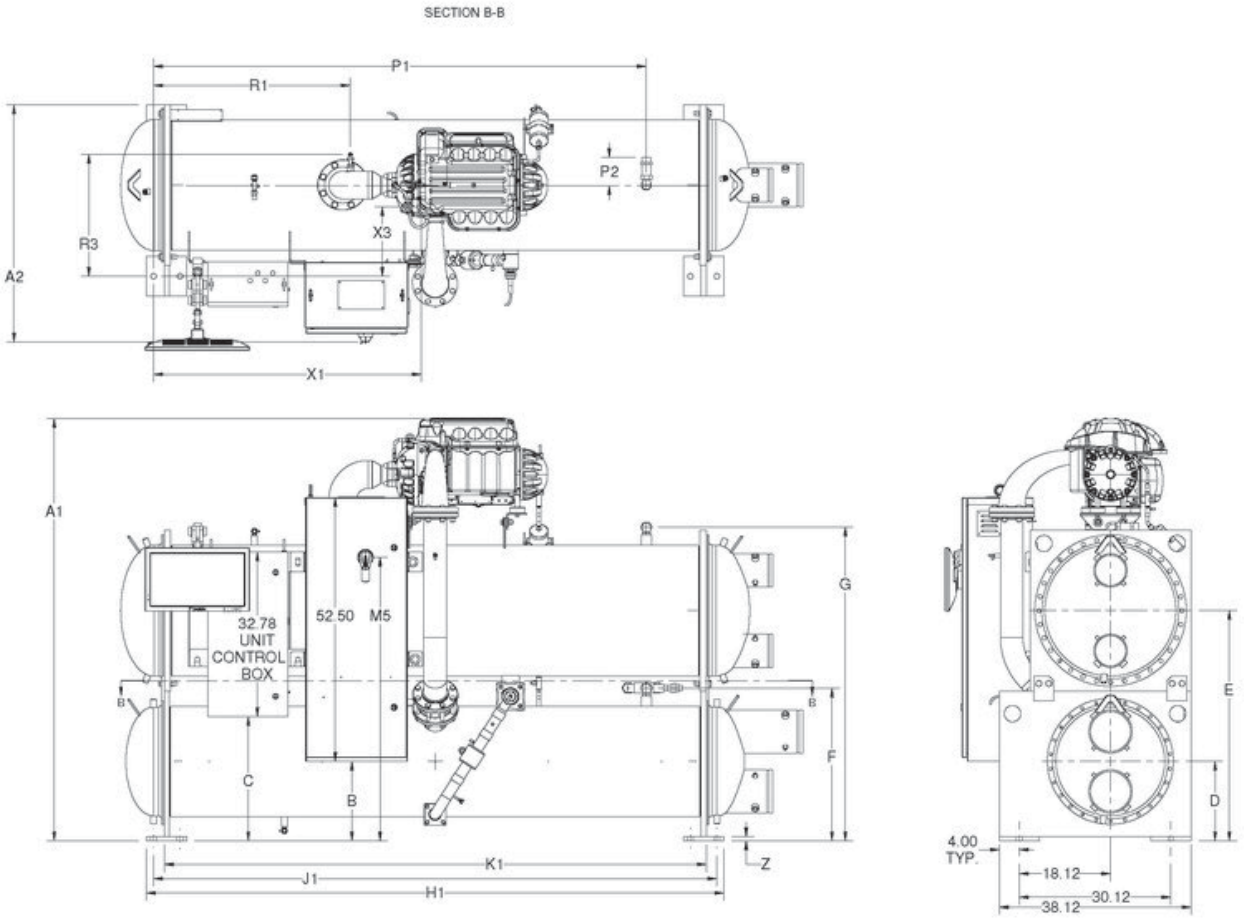

Table 3: WMC Single Compressor Dimensions

Model	Heat Exchanger	Length in (mm)	Width * in (mm)	Height in (mm)
043S-SN	**E2209/C2009**	130.80 (3322)	38.12 (965)	79.02 (2006)
048S-SN	**E2209/C2009**	130.80 (3322)	38.12 (965)	79.02 (2006)
060S-SN	**E2609/C2209**	130.80 (3322)	38.12 (965)	83.95 (2133)
060S-SE* **	**E2609/C2209**	130.80 (3322)	38.12 (965)	83.95 (2133)

* Width is based on unit without optional harmonic filters.
*** Denotes unit with economizer

Drawing Notes

1. Final connections must allow for 0.5-inch +/- (12.7 mm) manufacturing tolerances.
2. 1.00-inch FPT (25.4 mm) evaporator and condenser relief valves must be piped per ANSI / ASHRAE 15. Number of relief valves is 1 per evaporator and 2 per condenser.
3. 0.375-inch (9 mm) suction nozzle relief valve must be piped per ANSI / ASHRAE 15.
4. Minimum Clearances (See Figure 6):
   - Check local codes for any additional clearance requirements.
   - Installation layout should be designed by qualified personnel familiar with local codes.
5. 3.25-inch (83 mm) diameter lifting holes are provided. See installation manual (available at www.DaikinApplied.com) for lifting instructions.
6. All water connections are given in standard U.S. nominal pipe sizes. Standard connections are suitable for welding or grooved couplings.
7. Unit shown has standard right-hand water connections. Left-hand connections are available for either vessel. ANSI-flanged nozzle connections are available upon request. When using ANSI-flanged connections add 0.5 inch (13 mm) to each flanged end. Dimensions shown are for units (evaporator / condenser) with standard design pressures. The waterside design pressure is 150 psi (1034 kPa). Consult the factory for unit dimensions with higher design pressures.
8. Unit vibration isolator pads are provided for field installation and when fully loaded are 0.25 inches (6 mm) thick.
9. The shipping skid adds 4.00 inches (105 mm) to the overall unit height.
10. If main power wiring is brought up through the floor, this wiring must be outside the envelope of the unit.
11. The unit is shipped with a full operating charge of refrigerant except with the Type B knockdown option.
12. Optional marine waterboxes are available upon request.

Figure 6: Minimum Clearances Based on Standard Waterboxes

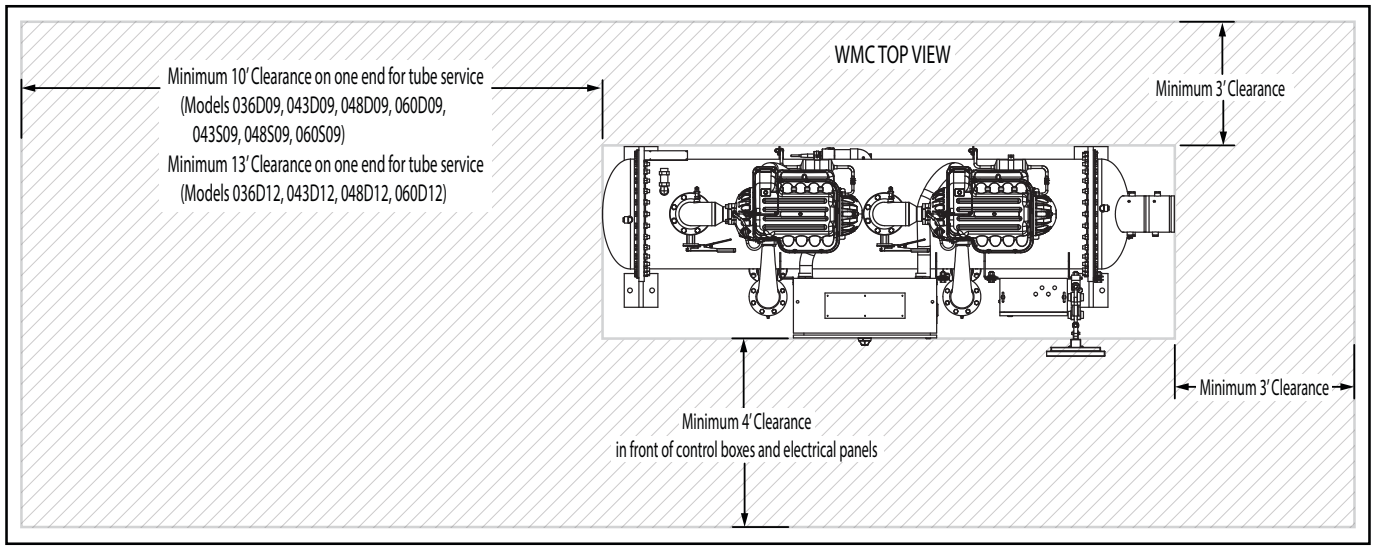

NOTE: Hinged type waterboxes may require more clearance. Consult your Daikin Applied sales representative for details.

Unit Options

Templifier Heat Recovery

TMC Templifier units are equipped with centrifugal compressors and are available as a configuration, each with optional pass arrangements.

Export Packaging

A wooden skid that aids in moving the unit and tight fitting plastic covering the entire unit to protect it from dirt and grime during transit and storage are standard. Open and closed crating is also offered as an option.

Pumpout Unit

Pumpout units are available in a variety of sizes with single-phase or three-phase power and with or without storage tanks. Contact your Daikin Applied sales office for details.

Extended Warranties

Extended 1, 2, 3, or 4 year warranties for parts only or for parts and labor are available for the compressor/motor only, the entire unit, or the entire unit including refrigerant.

Witness Performance Test

The specified full and/or part load tests, as ordered, are performed in the presence of the customer under the supervision of a factory engineer and include compilation of the test data onto an easy-to-read spreadsheet.

Non-Witness Test

The specified full and/or part load tests, as ordered, are performed under the supervision of a factory engineer; data is compiled, certified, and transmitted to the customer.

Refrigerant Charge

Units ship with a full holding charge of R-134a or R-513A refrigerant as a standard. An inert gas holding charge is available as an option.

Knockdown Shipment

Several options for a knockdown shipment to facilitate unit placement are available. See Retrofit Knockdown on page 18 for details.

Vessel Options

Marine Waterboxes

Marine waterboxes that allow the end plate of the waterbox to be removed without disconnecting the water piping from the chiller are optional.

Flange Water Connections

A standard unit will have grooved water connections. ANSI raised face flanges on either the evaporator or condenser are optional. Mating flanges must be provided by the field.

300 psi Water Side Vessel Construction

150 psi water side vessels are standard. 300 psi water side vessels are optional.

Epoxy and Ceramic Coating

Evaporator and condenser heads and marine waterboxes can be coated for corrosion protection with either epoxy or ceramic coatings. Tube sheets may also be ceramic coated.

Single Insulation - Evaporator Shell / Suction Piping

0.75-inch thermal insulation on cold surfaces — excluding heads and waterboxes — is available.

Single Insulation - Evaporator Heads and Waterboxes

0.75-inch thermal insulation is available.

Double Insulation - Evaporator Shell / Suction Piping

1.5-inch thermal insulation on cold surfaces — excluding heads and waterboxes — is available.

Double Insulation - Evaporator Heads and Waterboxes

1.5-inch thermal insulation is available.

Hinged Waterbox Covers and Heads

Hinges for marine waterbox covers or heads (compact waterboxes) are available to aid in heat exchanger maintenance.

Tube Size, Wall Thickness and Material

A wide range of tube options are available to accommodate most flow rates and fluids. Standard wall thickness is 0.025-inch. Wall thicknesses of 0.028-inch or 0.035-inch are optional.

Controls Options

BAS Interface Module

Factory-installed on the unit controller for the applicable protocol being used (Can also be retrofit):

- BACnet® MS/TP
- BACnet® IP
- BACnet® Ethernet
- LonWorks®
- Modbus® RTU

Electrical Options

Power Panel High Short Circuit Current Rating

65 kA panel rating (Standard is 35 kA).

Electro Magnetic Interference (EMI) and Radio Frequency Interference (RFI) Filter

A filter for EMI and RFI is a factory-installed option.

Ground Fault Protection

Protects equipment from arcing ground fault damage from line-to-ground fault currents less than those required for conductor protection.

RapidRestore®

Quickly restarts the unit and restores cooling capacity when power is restored after a power failure.

Special Order Options

The following special order options are available; requiring factory pricing, additional engineering, and possible dimension changes or extended delivery:

1. Non-standard location of nozzle connections on heads (compact waterboxes) or marine waterboxes
2. Clad tube sheets
3. Sacrificial anodes in heads (compact waterboxes) or marine waterboxes
4. Spacer rings on heads to accommodate automatic tube brush cleaning systems (installed by others)
5. Remote-mounted refrigerant monitor, including accessories such as 4-20mA signal, strobe light, audible horn, and air pick-up filter

Figure 7: Refrigeration System Diagram

BUBBLE NO.	LABEL	VALVE CONTROL
1	PRESSURE TAP	N/A
2	RELIEF VALVE	MANUAL
3	RELIEF VALVE	AUTOMATIC
4	SERVICE VALVE	MANUAL
5	BUTTERFLY VALVE	MANUAL
6	BUTTERFLY VALVE	MANUAL
7	PRESSURE TAP	N/A
8	RELIEF VALVE	MANUAL
9	SERVICE VALVE	MANUAL
10	STAGING VALVE	AUTOMATIC
11	STAGING VALVE	AUTOMATIC
12	BALL VALVE	MANUAL
13	EXPANSION VALVE	AUTOMATIC
14	BALL VALVE	MANUAL
15	BALL VALVE	MANUAL
16	FILTER DRYER	N/A
17	RELIEF VALVE	MANUAL
18	SIGHT GLASS	N/A
19	PRESSURE TAP	N/A
20	RELIEF VALVE	AUTOMATIC
21	3-WAY VALVE	AUTOMATIC
22	RELIEF VALVE	AUTOMATIC
23	SERVICE VALVE	MANUAL
24	PRESSURE TAP	N/A
25	RELIEF VALVE	MANUAL
26	FILTER DRYER	N/A
27	BALL VALVE	MANUAL
28	BALL VALVE	MANUAL
29	SERVICE VALVE	MANUAL
30	CHECK VALVE	AUTOMATIC
31	CHECK VALVE	AUTOMATIC
32	PRESSURE TAP	N/A
33	PRESSURE TAP	N/A
34	PRESSURE TAP	N/A
35	PRESSURE TAP	N/A
36	RELIEF VALVE	AUTOMATIC
37	RELIEF VALVE	AUTOMATIC
38	PRESSURE TAP	N/A
39	PRESSURE TAP	N/A

UNIT CONTROLLER	
BUBBLE NO.	DESCRIPTION
US02	EVAPORATOR ENTERING WATER TEMPERATURE
US03	CONDENSER ENTERING WATER TEMPERATURE
US04	CONDENSER LEAVING WATER TEMPERATURE
US05	LIQUID LINE TEMPERATURE
CS10	EVAPORATOR LEAVING WATER TEMPERATURE

FLOW SWITCH	
BUBBLE NO.	DESCRIPTION
CF	CONDENSER FLOW SWITCH
EF	EVAPORATOR FLOW SWITCH
CFS	CONDENSER FLOW SIGNAL TO CHILLER CONTROL
EFS	EVAPORATOR FLOW SIGNAL TO CHILLER CONTROL

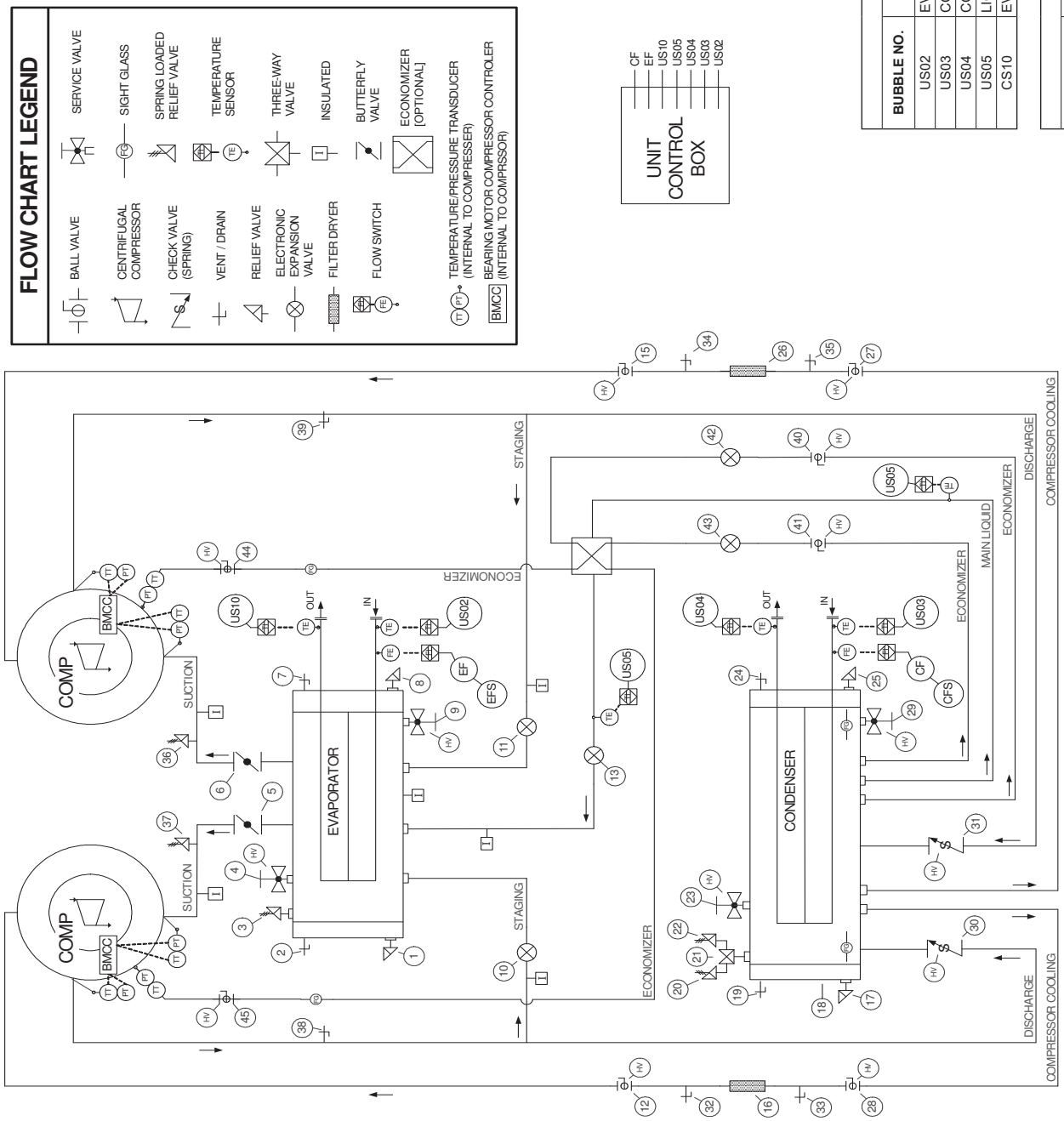

Table 4: Operating Limit and Equipment Room Guidelines

Equipment Room Guidelines	Temperature Range
Equipment room temperature, operating:	40° - 104°F
Equipment room temperature, standby, with water in vessels:	40° - 104°F
Equipment room temperature, standby, without water in vessels:	0° - 104°F

Operating/Standby Limits		Temperature
Standby	Maximum entering chilled water temperature (R-134a):	115°F
	Maximum entering chilled water temperature (R-513A):	112°F
Startup	Maximum entering chilled water temperature (R-134a):	90°F
	Maximum entering chilled water temperature (R-513A):	90°F
	Maximum entering condenser water temperature:	105°F
	Minimum entering condenser water temperature:	40°F
Operating	Maximum leaving chilled water temperature, cooling mode:	60°F
	Minimum leaving chilled water temperature, cooling mode:	38°F
	Maximum leaving condenser water temperature, cooling mode:	111°F
	Maximum entering condenser water temperature, cooling mode:	105°F
	Minimum entering condenser water temperature, cooling mode:	55°F

NOTE: Contact a Daikin Applied representative for performance at specific operating conditions as some limits may be dependent on unit configuration, including specific Heating Mode limits for TMC models.

Location Requirements

Daikin WMC units are designed only for indoor, weather-protected, non-freezing areas consistent with the NEMA 1 rating on the chiller, controls, and electrical panels. Equipment room temperature for operating and standby conditions is 40° - 104°F (4.4°C to 40°C).

Vibration Mounting

The Magnitude® WMC chiller is almost vibration-free. Consequently, floor mounted spring isolators are not usually required. Neoprene mounting pads are shipped with each unit. It is suggested to continue to use flexible piping connectors to reduce sound transmitted into the pipe and to allow for expansion and contraction.

System Design

Water Piping

Field installed water piping to the chiller must include:

- air vents at the high points.
- a cleanable water strainer upstream of the evaporator and condenser inlet connections.
- a flow proving device for both the evaporator and condenser to prevent freeze up. Flow switches, thermal dispersion switches, or Delta-P switches can be used. Note that flow switches are factory installed. Additional flow switches can be used only if they are connected in series with the ones already provided.
- sufficient shutoff valves to allow vessel isolation. The chiller must be capable of draining the water from the evaporator or condenser without draining the complete system.

It is recommended that field installed water piping to the chiller include:

- thermometers at the inlet and outlet connections of both vessels.
- water pressure gauge connection taps and gauges at the inlet and outlet connections of both vessels for measuring water pressure drop.

Piping must be supported to eliminate weight and strain on the fittings and connections. All evaporators and condensers have OGS-type grooved water connections (adhering to Standard AWWA C606) or optional flange connections. The installing contractor must provide matching mechanical connections. Chilled water piping must be adequately insulated.

NOTE: This product, in its standard configuration, is equipped with a shell and tube evaporator with carbon steel shell and copper tubes. The water or other fluid used in contact with the wetted surfaces of the heat exchangers must be clean and non-corrosive to the standard materials of construction. Daikin Applied makes no warranty as to the compatibility

of fluids and materials. Non-compatible fluids may void the equipment warranty. If the compatibility of the fluid with the standard materials of construction is in question, a professional corrosion consultant should administer the proper testing and evaluate compatibility.

Variable Fluid Flow Rates and Tube Velocities

Many chiller system control and energy optimization strategies require significant changes in evaporator water flow rates. The Magnitude® chiller line is well suited to take full advantage of these energy saving opportunities using different combinations of shell sizes, number of tubes, and pass arrangements.

Both excessively high and excessively low fluid flow rates should be avoided. Excessively high fluid flow rates and correspondingly high tube velocities will result in high fluid pressure drops, high pumping power, and potentially tube erosion or corrosion damage. Excessively low fluid flow rates and correspondingly low velocities should also be avoided as they will result in poor heat transfer, high compressor power, sedimentation and tube fouling.

Water Volume

All chilled water systems need adequate time to recognize a load change to avoid short cycling of the compressors or loss of control. The potential for short cycling usually exists when the building load falls below the minimum chiller plant capacity or on close-coupled systems with very small water volumes.

Some of the things the designer should consider when looking at water volume are the minimum cooling load, the minimum chiller plant capacity during the low load period and the desired cycle time for the compressors.

Assuming that there are no sudden load changes and that the chiller plant has reasonable turndown, a rule of thumb of “gallons of water volume equal to two to three times the chilled water gpm flow rate” is often used.

A properly designed storage tank should be added if the system components do not provide sufficient water volume.

Heat Recovery

All Daikin centrifugal Templifier units are factory tested prior to shipment and must be initially started at the job site by a factory-trained service technician. Failure to follow startup procedure can adversely affect the equipment warranty. One important consideration in the operation of TMC units is the relationship between the source heat flowing through the evaporator and the heating load being satisfied by the unit condenser.

If there is insufficient source heat going to the evaporator, the unit cannot produce sufficient heat in the condenser. TMC capacity is controlled by the hot water temperature leaving the condenser, but the temperature is reset downward as the delta-T decreases to give, in effect, a constant entering water temperature. The leaving hot water temperature decreases with decreasing heat load. The unit cools the source water to whatever extent is required to meet the heating load at any given time. If there is insufficient source heat available, the unit will try to pull down the source water temperature (perhaps to unacceptable levels) in an effort to extract the required heat.

This will lower evaporator leaving water temperature and can cause the compressor to pump against a higher refrigerant pressure difference than it was designed for. If the leaving evaporator water temperature drops below a predetermined value, the controller lowers (resets) the leaving hot water setpoint, before shutting the unit off in the case of further temperature drop.

Optimizing Efficiency

A key to improving energy efficiency for any chiller is minimizing the compressor pressure lift. Reducing the lift reduces the compressor work and its energy consumption per unit of output.

The optimum plant design must take into account all of the interactions between chiller, pumps, and tower. The Daikin Energy Analyzer™ II program is an excellent tool to investigate the entire system efficiency, quickly and accurately. It is especially good at comparing different system types and operating parameters. Contact your local Daikin Applied sales office for assistance on your particular application.

Evaporator

Reducing Evaporator Fluid Flow

Several popular chiller plant control practices — including Variable Primary Flow systems — advocate reducing the evaporator fluid flow rate as the chiller capacity is reduced. This practice can significantly reduce the evaporator pumping power while having little effect on chiller energy consumption. The Magnitude® WMC chillers, with their wide range of shell, tube, and pass combinations, are ideal for application in variable evaporator flow systems as long as the minimum and maximum tube velocities are taken into consideration when selecting the chiller.

If it is decided to vary the evaporator water flow rate, the rate of change should not exceed 10% per minute and should not exceed the minimum or maximum velocity limits.

Evaporator Entering Water Temperature

The maximum temperature of water entering the chiller for R-134a on standby must not exceed 115°F (46.1°C) and 112°F (44.4 °C) for R-513A on page 14. Maximum temperature entering for R-134a on startup must not exceed 90°F (32°C) and 90°F (32°C) for R-513A on page 14.

Evaporator Leaving Water Temperature

Warmer leaving chilled water temperatures will raise the compressor's suction pressure and decrease the lift, improving efficiency. Using 45°F (7°C) leaving water instead of the typical 42°F (5.5°C) will significantly reduce chiller energy consumption.

Evaporator Water Temperature Difference

The industry standard has been a 10°F (5.5°C) temperature drop in the evaporator. Increasing the drop to 12°F or 14°F (6.6°C or 7.7°C) can improve chiller efficiency and reduce pump energy consumption.

Condenser

Reducing Condenser Fluid Flow

Several popular chiller plant control practices also advocate reducing the condenser fluid flow rate as the chiller load is reduced. This practice can significantly reduce the condenser pumping power, but it may also have the unintended consequence of significantly increasing compressor power since the leaving condenser water temperature is directly related to compressor lift and power. The higher compressor power will typically be larger than the condenser pumping power reduction and will result in a net increase in chiller plant energy consumption. Therefore, before this strategy is applied for energy saving purposes it should be extensively modeled or used in an adaptive chiller plant control system which will take into account all of the interdependent variables affecting chiller plant energy. If it is decided to use variable condenser fluid flow, the model WMC chiller can operate effectively as long as the minimum and maximum tube velocities are taken into consideration when selecting the chiller.

Reducing Condenser Entering Water Temperature

As a general rule, a 1°F (0.5°C) drop in condenser entering water temperature will reduce chiller energy consumption by two percent. Cooler water lowers the condensing pressure and reduces compressor work. One or two degrees can make a noticeable difference. The incremental cost of a larger tower can be small and provide a good return on investment.

When the ambient wet bulb temperature is lower than design, the entering condenser water temperature of Magnitude® WMC chillers can be lowered to improve chiller performance.

Chillers can start with entering condenser water temperatures as low as 40°F (4.4°C). For short periods of time during startup, the entering condenser water temperature can even be lower than the leaving chilled water temperature.

Depending on local climatic conditions, using the lowest possible entering condenser water temperature may be more costly in total system power consumed than the expected savings in chiller power would suggest, due to the excessive fan power required.

In this scenario, cooling tower fans would continue to operate at 100% capacity at low wet bulb temperatures. The trade-off between better chiller efficiency and fan power should be analyzed for best overall system efficiency. The Energy Analyzer™ II program (available from your Daikin Applied sales representative) can optimize the chiller/tower operation for specific buildings in specific locales.

Condenser Water Temperature Difference

The industry standard of 3 gpm/ton or about a 9.5°F (5.3°C) delta-T works well for most applications.

Condenser Water Temperature Control

Condenser water control is an important consideration in chiller plant design since condenser water temperature will directly impact chiller operation and efficiency. When the ambient wet bulb temperature is lower than peak design, the entering condenser water temperature from the cooling tower can be allowed to fall, improving chiller performance. However, operational issues may occur when the condenser water temperatures are either too high or too low. The WMC chiller provides several options to assist the chiller plant designer in providing the optimum control of condenser water temperature.

<u>Cooling Tower Control</u>

Control of the cooling tower is required to maintain stability and avoid operational issues. This can be achieved through a BAS or by using the MicroTech® II controller. For systems utilizing a common condenser water loop for multiple purposes, the BAS contractor must provide the control but use of the MicroTech® II output signal is still recommended.

The preferred cooling tower control utilizes a variable speed fan. MicroTech® II will provide a control signal to determine the proper fan speed. It can also control up to four stages of fan cycling. Note that fan cycling can cause cooling tower water temperature to fluctuate as fans stage on/off, potentially adding instability to the system.

Special consideration must be given to starting the chiller when cold condenser water is present, such as with inverted starts or changeover from free (tower) cooling to mechanical cooling. It is required that some method be used to control the condenser water to maintain proper head pressure as indicated by the MicroTech® II controller.

Acceptable methods include the following **(Each of these options can be controlled by the MicroTech® II or through a BAS utilizing the MicroTech® II output signals.)**:

1. Three-Way Bypass Valve Operation

   A traditional method for building condenser pressure at startup with colder condenser water is with the use of a three-way bypass valve. The device blends warmer water leaving the condenser with cooler water from the cooling tower at the condenser inlet. The bypass valve position will change until full flow from the tower to the condenser is obtained. The MicroTech® II provides only

the valve position control signal. Main power to drive the valve's actuator must be provided by the installer. The three-way valve should be located close to the chiller within the equipment room to minimize the volume of water.

2. Two-Way Valve Operation

   Another condenser control method is to use a modulating two-way control valve located on the outlet connection of the condenser. The valve will be nearly closed at startup to restrict water flow, which keeps generated heat in the condenser until an acceptable minimum condenser pressure is reached. As heat builds, the valve will open slowly until a full flow condition from the cooling tower is established. A separate power source is required to provide power to the valve actuator.

3. VFD Operating with a Condenser Water Pump

   A third method of condenser control for startup is utilizing a variable frequency drive with the condenser water pump. The speed will change as directed by the MicroTech® II output signal until design flow is reached. Speed adjustments may be required during the initial chiller startup as determined by the service technician.

NOTE: Not using the MicroTech® II logic to control valves and variable frequency drives may result in system instability, capacity reduction, and issues starting the chiller with cold condenser water temperature.

Condenser Pump Sequencing

It is recommended to utilize the logic built into theMicroTech®II controller to start the condenser pump and maintain condenser head pressure control. MicroTech® II has the capability to operate a primary pump and a secondary standby pump. The condenser water flow should be stopped when the chiller shuts off. This will conserve energy and prevent refrigerant from migrating to the condenser.

Lenient Flow Operation

For chiller startup, the condenser control systems can reduce the flow to low rates, which can make operation of a flow sensing device unreliable. The MicroTech® II controller has a "lenient flow" feature that acts as an override of the flow sensor while protecting the chiller by monitoring a condenser pressure setting that is below the high pressure cutout.

Water Side Economizer Cycle Operation

Water side economizers are commonly used for ASHRAE 90.1 compliance and energy savings. This system utilizes a heat exchanger external to the chiller when cold cooling tower water is available to provide cooling. The most common system has a heat exchanger used in conjunction with the chiller's evaporator.

The BAS contractor will need to provide controls for the heat exchanger including isolation valves and temperature control. The BAS contractor will also need to control the isolation valves for the chiller. Changeover from economizer cooling to mechanical cooling requires one of the methods previously mentioned to maintain suitable condenser head pressure.

Contact your local Daikin Applied representative for more information on this application.

Retrofit Knockdown

It is estimated that fifty percent of retrofit applications require partial or complete disassembly of the chiller. Magnitude® WMC chillers are relatively easy to disassemble due to the small compressor size, simplified refrigerant piping, and the absence of a lubrication system with its attendant components and piping. Two knockdown arrangements, Type A shown in Figure 8 and Type B shown in Figure 9, are available as options.

Type A Knockdown, "Bolt-Together Construction"

Chillers are built and shipped completely assembled with bolt-together construction on major components for field disassembly and reassembly on the job site.

Figure 8: Type A Knockdown

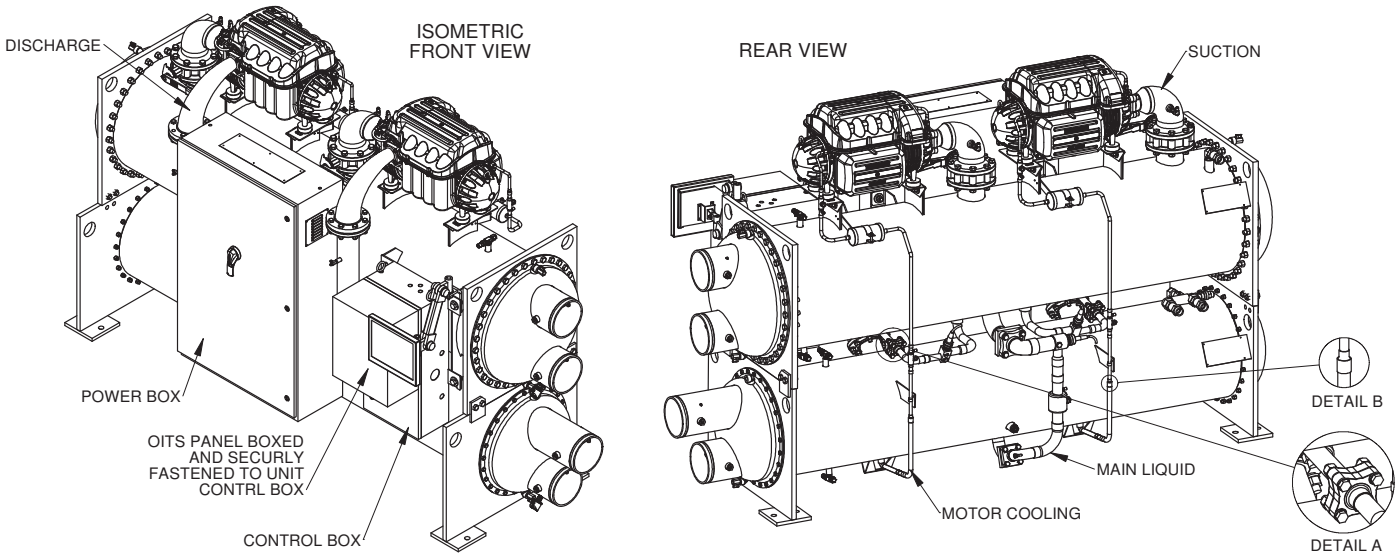

Type A Scope:

- Chiller components are manufactured with bolt-together construction designed for field disassembly and reassembly on-site.
- Unit ships completely assembled to the jobsite.
- Suction and discharge lines have bolt-on flanges.
- Motor cooling line is brazed at mechanical connections (see Detail B in.
- Unit ships with vessel and/or head insulation, if ordered.
- Unit ships with full factory refrigerant charge in the chiller.
- Unit ships with replacement refrigerant gaskets and O-rings, stick-on wire ties, and touch-up paint.
- Unit is fully tested at the factory prior to shipment.
- Site disassembly and reassembly must be supervised or completed by Daikin Applied service personnel.
- Blockoff plates are required to cover any refrigerant connection left open for extended periods of time. Contact Daikin Applied service to obtain these parts.
- Ideal for retrofit applications where site diassembly is needed due to installation clearances.

Type B Knockdown, "Partial Disassembly"

Compressor(s), power boxes and control box are removed and shipped on separate skids; combined vessel stack is shipped together as a sub-assembly.

Figure 9: Type B Knockdown

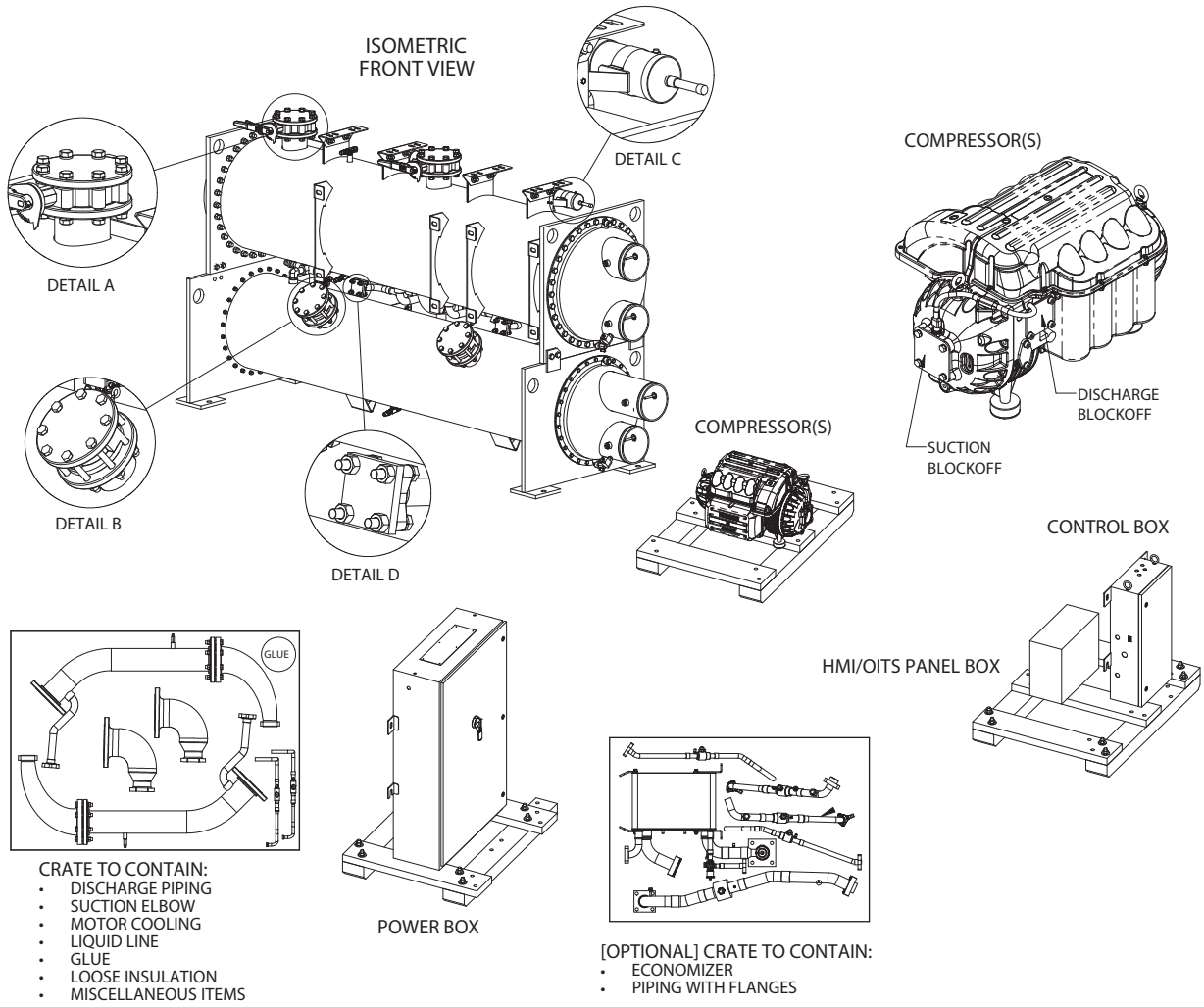

Type B Scope:

- Compressor(s), power box, and control box are removed (at the factory) and shipped on separate skids; vessel stack is shipped as a complete sub-assembly.
- All associated piping and wiring remain attached, if possible.
- Suction and discharge lines have bolt-on flanges and, if possible, remain attached.
- All free piping ends are capped.
- Unit ships with vessel and/or head insulation, if ordered.
- Refrigerant will not be shipped with the chiller and must be procured by others.
- Compressor(s) and vessels receive an inert gas holding charge.
- Unit ships with replacement refrigerant gaskets and O-rings, stick-on wire ties, and touch-up paint.
- Unit is fully tested at the factory prior to shipment.
- Site reassembly must be supervised or completed by Daikin Applied service personnel. Cost for unit resassembly and supervision by Daikin Applied service is not included in the purchase price of the equipment. Contact Daikin Applied service for pricing.
- Ideal for retrofit applications where it is desired that the compressor(s), power box, and control box be removed at the factory, prior to shipment, and where refrigerant may be secured by others.

MAGNITUDE® MAGNETIC BEARING CENTRIFUGAL CHILLERS

PART 1 - GENERAL

1.1 SUMMARY

A. Section includes design, performance criteria, refrigerants, controls, and installation requirements for water-cooled centrifugal chillers.

1.2 REFERENCES

A. Comply with the following codes and standards: AHRI 550/590, AHRI 575, NEC, ANSI/ASHRAE 15, OSHA as adopted by the State, ETL, ASME Section VIII

1.3 SUBMITTALS

A. Submittals shall include the following:

1. Dimensioned plan and elevation view, including required clearances, and location of all field piping and electrical connections.
2. Summaries of all auxiliary utility requirements such as: electricity, water, air, etc. Summary shall indicate quality and quantity of each required utility.
3. Diagram of control system indicating points for field interface and field connection. Diagram shall fully depict field and factory wiring.
4. Manufacturer's certified performance data at full load plus IPLV or NPLV.
5. Installation and Operating Manuals.

1.4 QUALITY ASSURANCE

A. Regulatory Requirements: Comply with the codes and standards in Section 1.2.

B. Chiller manufacturer plant shall be ISO 9001 and ISO 14001 Certified.

C. The chiller shall be factory tested as standard at the manufacturer's plant prior to shipment.

1.5 DELIVERY AND HANDLING

A. Chillers shall be delivered to the job site completely assembled and charged with R-134a or R-513A refrigerant and be shipped on skids with a weather resistant cover.

– OR –

A. [For Type A Knockdowns] The unit shall be delivered to the job site completely assembled and charged with refrigerant and ready for field knockdown. Contractor shall leak test, recover refrigerant, evacuate, and charge with refrigerant after reassembly.

– OR –

A. [For Type B Knockdowns] The compressor, suction and discharge piping, VFD power panel and touch screen shall be removed and shipped separately. All wiring and piping shall remain attached where possible. The remaining loose parts shall be packaged in a separate crate. The unit is to be factory tested and shipped with an inert gas holding charge, evaporator insulated and a kit for compressor insulation. Contractor shall leak test, evacuate and charge with refrigerant after reassembly.

B. Comply with the manufacturer's instructions for rigging and transporting units. Leave protective covers in place until installation.

1.6 MAINTENANCE

A. Maintenance of the chillers in accordance with manufacturer's recommendations as published in the installation and maintenance manuals shall be the responsibility of the owner.

PART 2 - PRODUCTS

2.1 ACCEPTABLE MANUFACTURERS

A. Basis of Design - Daikin Magnitude® model WMC, including the standard product features and all special features required per the plans and specifications.

B. Equal Products - Equipment manufactured by [ENTER MANUFACTURER NAME HERE] may be acceptable as an equal. Naming these products as equal does not imply that their standard construction or configuration is acceptable or meets the specifications. Equipment proposed "as equal", must meet the specifications including all architectural, mechanical, electrical, and structural details, all scheduled performance and the job design, plans and specifications.

2.2 UNIT DESCRIPTION

A. Provide and install as shown on the plans a factory assembled, charged, and tested water-cooled packaged centrifugal chiller. Chillers shall have no more than two oil-free, magnetic bearing, semi-hermetic centrifugal compressors (no exceptions). [For TMC models] Provide and install as shown on the plans factory assembled, factory charged, magnetic bearing compressor water heater in the quantity specified. Chillers shall have no more than two oil-free, magnetic bearing, semi-hermetic centrifugal compressors with heat recovery capability.

B. Each compressor shall have an integrated variable-frequency drive operating in concert with inlet guide vanes for optimized full and part load efficiency. On

two-compressor units, the evaporator and condenser refrigerant sides and the expansion valve shall be common and the chiller shall be capable of running on one compressor with the other compressor or any of its auxiliaries inoperable or removed.

2.3 DESIGN REQUIREMENTS

A. General: Provide a complete water-cooled, semi-hermetic oil-free centrifugal compressor water chiller or heater as specified herein. The unit shall be provided according to standards indicated in Section 1.2. In general, unit shall consist of one or two magnetic bearing, completely oil-free centrifugal compressors [with water heaters for TMC models], refrigerant, condenser and evaporator, and control systems including integrated variable frequency drive, operating controls and equipment protection controls. Chillers shall be charged with R-134a or R-513A refrigerant. If manufacturer offers a chiller using any HCFC refrigerant, manufacturer shall provide, in writing, documentation signed by an officer of the company assuring refrigerant availability and price schedule for a 20-year period.

B. The entire chiller system, including all pressure vessels, shall remain above atmospheric pressure during all operating conditions and during shut down to ensure that non-condensables and moisture do not contaminate the refrigerant and chiller system. If any portion of the chiller system is below atmospheric pressure during either operation or shut down, the manufacturer shall include, at no charge:

1. A complete purge system capable of removing non-condensables and moisture during operation and shut-down.
2. A 20-year purge maintenance agreement that provides parts, labor, and all preventative maintenance required by the manufacturer's operating and maintenance instructions.
3. The manufacturer shall also include at no charge for a period of 20 years an annual refrigerant analysis report to identify chiller contamination due to vacuum leaks. If the analysis identifies water, acid, or other contaminant levels higher than specified by the manufacturer, the refrigerant must be replaced or returned to the manufacturer's original specification at no cost to the owner.
4. The manufacturer shall include a factory-installed and wired system that will enable service personnel to readily elevate the vessel pressure during shutdown to facilitate leak testing.

C. Performance: Refer to chiller performance rating.

D. Acoustics: Sound pressure for the unit shall not exceed the following specified levels. Provide the necessary acoustic treatment to chiller as required. Sound data shall be measured in dB according to AHRI Standard 575 and shall include overall dBA. Data shall be the highest levels recorded at all load points.

Octave Band								Overall dBA
63	125	250	500	1000	2000	4000	8000	

2.4 CHILLER COMPONENTS

A. Compressors:

1. The unit shall utilize magnetic bearing, oil-free, semi-hermetic centrifugal compressors [with water heater for TMC models]. The compressor drive train shall be capable of coming to a controlled, safe stop in the event of a power failure.
2. The motor shall be of the semi-hermetic type, of sufficient size to efficiently fulfill compressor horsepower requirements. It shall be liquid refrigerant cooled with internal thermal sensing devices in the stator windings. The motor shall be designed for variable frequency drive operation.
   a. If the compressor design requires a shaft seal to contain the refrigerant, the manufacturer shall supply a 20 year parts and labor warranty on the shaft seal and a lifetime refrigerant replacement warranty if a seal failure leads to refrigerant loss, or the chiller manufacturer shall assume all costs to supply and install a self contained air conditioning system in the mechanical space sized to handle the maximum heat output of the open drive motor. The energy required to operate this air conditioning system shall be added to the chiller power at all rating points for energy evaluation purposes.
   b. If the compressor/motor uses any form of antifriction bearing (roller, ball, etc), the chiller manufacturer shall provide the following at no additional charge:
      - A 20-year bearing warranty and all preventative maintenance as specified by the manufacturer's published maintenance instructions.
      - At start up, a three-axis vibration analysis and written report to establish bearing condition baseline.
      - An annual three-axis vibration analysis and written report indicating bearing condition.
3. The chiller shall be equipped with an air-cooled or integrated refrigerant-cooled Variable Frequency Drive to automatically regulate compressor speed

in response to cooling load and the compressor pressure lift requirement. If a condenser water-cooled VFD is supplied, the manufacturer shall supply factory installed dual water filters with a bypass valve and pressure differential switch factory wired to the chiller control panel to indicate that a filter has clogged and requires service. The pressure differential switch shall also provide a separate dry contact which can be connected to the BAS system as a means of notifying operating personnel of the need to service the filters. If the condenser cooling circuit includes an intermediate heat exchanger, it must be of the brush cleanable shell and tube style. Brazed plate heat exchangers which cannot be field cleaned are not acceptable. Movable inlet guide vanes and variable compressor speed, shall provide unloading. The chiller controls shall coordinate compressor speed and guide vane position to optimize chiller efficiency.

4. [OPTIONAL] The chiller shall be equipped with a factory-mounted and wired passive harmonic filter guaranteed to meet the IEEE Standard 519 at an Isc/IL ratio greater than 20.

B. Evaporator and Condenser:

1. The evaporator and condenser shall be separate vessels of the shell-and-tube type, designed, constructed, tested and stamped according to the requirements of the ASME Code, Section VIII. The tubes shall be individually replaceable and secured to the intermediate supports without rolling.
2. The evaporator shall be flooded type with [0.025 in.] –OR– [0.028 in.] –OR– [0.035 in.] wall [copper] –OR– [90/10 CuNi] tubes rolled into [carbon steel] –OR– [ceramic-coated steel] tubesheets. The water side shall be designed for a minimum of [150 psig] –OR– [300 psig]. The heads shall be [carbon steel] –OR– [epoxy-coated steel] –OR– [Monel-clad] –OR– [Stainless Steel]. Water connections shall be grooved suitable for [grooved couplings] –OR– [flanged connections]. The evaporator shall have [dished heads with valved drain and vent connections] –OR– [shall be equipped with marine waterboxes with removable covers and vent and drain connections]. The evaporator shall have [right-hand] –OR– [left-hand] connections when looking at the unit control panel.
3. The condenser shall have [0.025 in.] –OR– [0.028 in.] –OR– [0.035 in.] wall [copper] –OR– [90/10 CuNi] –OR– [70/30 CuNi] –OR– [stainless steel] –OR– [titanium] tubes rolled into [carbon steel] –OR– [Monel-clad] –OR– [stainless steel clad] –OR– [titanium-clad] –OR– [ceramic-coated] tube sheets. Water connections shall be [grooved suitable for grooved couplings]—OR– [flanged]. The water side shall be designed for a minimum of [150 psig] –OR– [300 psig]. The condenser shall have [dished heads with valved drain and vent connections] –OR– [shall be equipped with marine waterboxes with removable covers and vent and drain connections]. The condenser shall have [right-hand]

   –OR– [left-hand] connections when looking at the unit control panel.
4. Provide sufficient isolation valves and condenser volume to hold the full unit refrigerant charge in the condenser during servicing or provide a separate pumpout system and storage tank sufficient to hold the charge of the largest unit being furnished.
5. An electronic expansion valve shall control refrigerant flow to the evaporator. Fixed orifice devices or float controls with hot gas bypass are not acceptable because of inefficient control at low load conditions. The liquid line shall have moisture indicating sight glass.
6. Re-seating type spring loaded pressure relief valves according to ASHRAE-15 safety code shall be furnished. The evaporator shall be provided with single or multiple valves. The condenser shall be provided with dual relief valves equipped with a transfer valve so one relief valve can be removed for testing or replacement without loss of refrigerant or removal of refrigerant from the condenser. Rupture disks are not acceptable.
7. [OPTIONAL] The evaporator shall be insulated with [3/4 in.] OR [1.5 in.] thick CFC and HCFC-free closed-cell flexible elastomeric foam insulation material with 100% adhesive coverage. The insulation shall have an additional outer protective layer of 3mm thick PE embossed film to provide superior damage resistance. Insulation without the protective outer film shall not be acceptable. UV resistance level shall meet or exceed a rating of ‘Good’ in accordance with the UNI ISO 4892 - 2/94 testing method.
8. [OPTIONAL] The evaporator waterbox shall be insulated with UL recognized 3/4 inch OR 1 ½ inch closed cell insulation. All joints and seams shall be carefully sealed to form a vapor barrier.
9. Provide factory-mounted and wired, thermal-dispersion water flow switches on each vessel to prevent unit operation with no or low water flow.

C. Vibration Isolation

1. Provide neoprene waffle-type vibration isolators for each corner of the unit.

D. Power Connections

1. Power connection shall be single point to a factory-mounted disconnect switch OR shall be multipoint to each compressor power panel on two-compressor units.

E. Chiller Control

1. The unit shall have a microprocessor-based control system consisting of a touch-screen operator interface and a unit controller.
2. The touch-screen shall display the unit operating parameters, accept setpoint changes (multi-level password protected) and be capable of resetting faults and alarms. The following parameters shall be displayed on the home screen and also as trend curves on the trend screen:
   - Entering and leaving chilled and condenser water temperatures
   - Evaporator and condenser saturated refrigerant pressures
   - Percent of 100% speed (per compressor)
   - % of rated load amps for entire unit
3. In addition to the trended items above, all other important real-time operating parameters shall also be shown on the touch-screen. These items shall be displayed on a chiller graphic showing each component. At a minimum, the following critical areas must be monitored:
   - Compressor actual speed, maximum speed, percent speed
   - Evaporator water in and out temperatures, refrigerant pressure and temperature
   - Condenser water in and out temperatures, refrigerant pressure and temperature
   - Liquid line temperature
   - Chilled water setpoint
   - Compressor and unit state and input and output digital and analog values
4. A fault history shall be displayed using an easy to decipher, color coded set of messages that are date and time stamped. The alarm history shall be downloadable from the unit's USB port. An operating and maintenance manual specific for the unit shall be viewable on the screen and downloadable.
5. All setpoints shall be viewable and changeable (multi-level password protected) on the touch screen and include setpoint description and range of set values.
6. Automatic corrective action to reduce unnecessary cycling shall be accomplished through preemptive control of low evaporator or high discharge pressure conditions to keep the unit operating through abnormal transient conditions.
7. The chiller shall be capable of sequencing up to four other similar chillers for WMC models. The contractor shall furnish and wire network isolators for n-1 units.
8. The chiller shall be capable of automatic control of: evaporator and condenser pumps (primary and standby), up to 3 stages of cooling tower fan cycling control and a tower modulating bypass valve or cooling tower fan variable frequency drive.
9. [OPTIONAL] The factory mounted controller(s) shall support operation on a BACnet®, Modbus® or LonWorks® network via one of the data link / physical layers listed below as specified by the successful Building Automation System (BAS) supplier.
   - Modbus®
   - BACnet® MS/TP master (Clause 9)
   - BACnet® IP, (Annex J)
   - BACnet® ISO 8802-3, (Ethernet)
   - LonTalk® FTT-10A. The unit controller shall be LonMark® certified.
10. The information communicated between the BAS and the factory mounted unit controllers shall include the reading and writing of data to allow unit monitoring, control and alarm notification as specified in the unit sequence of operation and the unit points list.
11. For chillers communicating over a LonMark® network, the corresponding LonMark® eXternal Interface File (XIF) shall be provided with the chiller submittal data.
12. All communication from the chiller unit controller as specified in the points list shall be via standard BACnet® objects. Proprietary BACnet® objects shall not be allowed. BACnet® communications shall conform to the BACnet® protocol (ANSI/ASHRAE135-2001). A BACnet® Protocol Implementation Conformance Statement (PICS) shall be provided along with the unit submittal.
13. [OPTIONAL] The chiller shall be equipped with the capability to restart and reach full load quickly in the event of a power interruption. The compressor shall be capable of restarting within 43 seconds after power is restored and shall reach 80% load within 120 seconds. Chillers not able to restart or load within this time frame shall include a properly sized thermal storage tank to maintain temperature stability in the system.
14. [TMC models only] The unit shall be capable of operating as a heat-recovery water heater or as a

water-cooled chiller. Changeover shall be by a panel-mounted Heat/Cool switch or by a remote, digital input signal. When in the heating mode, unit capacity shall be controlled by a temperature sensor in the leaving condenser (hot) water. Reset of leaving water temperature based on condenser Delta-T shall be provided. This control strategy shall hold the entering water temperature approximately constant and lower the leaving water temperature proportionally to the heating load. When in the cooling mode, unit capacity shall be controlled by the leaving evaporator water temperature. Reset shall be available based on the return temperature or a 4-20mA external signal.

2.5. OPTIONAL ITEMS

A. The following optional items shall be furnished:

1. Open OR closed export crate
2. Pumpout unit, with or without storage vessel
3. Refrigerant monitor
4. Non-witness performance test (water only) in accordance with procedures and to the tolerances contained in AHRI Standard 550/590.

   – OR –

   Witness performance test (water only) in accordance with procedures and to the tolerances contained in AHRI Standard 550/590.
5. OSHPD Certification: The chiller shall be OSHPD Pre-Approved per OSP–0116-10 and be so labeled. The chiller shall be seismically certified to Short Period Design Spectral Response S_{DS} =2.0 gravities at roof height (z/h=1.0) and S_{DS} =2.5 @ z/h=0 (ground). The chiller must be mounted to a rigid base and may use neoprene waffle vibration pads.

   – OR –

   IBC Certification: The chiller shall be certified to the following codes and standards; 2009 IBC, 2010 CBC, ICC-ES AC-156, ASCE 7-05. The chiller must be mounted to a rigid base and may use neoprene waffle vibration pads.

PART 3 - EXECUTION

3.1 INSTALLATION

A. Installing contractor to:

1. Install per manufacturer's requirements, shop drawings, and contract documents.
2. Adjust chiller alignment on foundations, or subbases as called for on drawings.
3. Arrange piping to allow for dismantling to permit head removal and tube cleaning.
4. Coordinate electrical installation with electrical contractor.
5. Coordinate controls with control contractor.
6. Provide all material required for a fully operational and functional chiller.

3.2 START-UP

A. Factory Start-Up Services: Provide for as long a time as is necessary to ensure proper operation of the unit, but in no case for less than two full working days. During the period of start-up, the start-up technician shall instruct the owner's representative in proper care and operation of the unit.

THIS PAGE INTENTIONALLY LEFT BLANK

Daikin Applied Training and Development

Now that you have made an investment in modern, efficient Daikin Applied equipment, its care should be a high priority. For training information on all Daikin Applied HVAC products, please visit us at www.DaikinApplied.com and click on Training, or call 540-248-9646 and ask for the Training Department.

Warranty

All Daikin Applied equipment is sold pursuant to its standard terms and conditions of sale, including Limited Product Warranty. Consult your local Daikin Applied representative for warranty details. To find your local Daikin Applied representative, go to www.DaikinApplied.com.

Aftermarket Services

To find your local parts office, visit www.DaikinApplied.com or call 800-37PARTS (800-377-2787). To find your local service office, visit www.DaikinApplied.com or call 800-432-1342.

This document contains the most current product information as of this printing. For the most up-to-date product information, please go to www.DaikinApplied.com.

Products manufactured in an ISO Certified Facility.

©2022 Daikin Applied | (800) 432–1342 | www.DaikinApplied.com

LUMALIER

ADPL Series

IN AHU AND IN DUCT UVC FIXTURES

Our ADPL Series UVC Fixtures are engineered for residential and light commercial applications in split system air handlers (AHUs). These In-AHU and In-Duct UVC fixtures provide solutions for disinfection throughout homes and can also be used in some light commercial applications. Benefits include:

- Reduces odors
- Reduces HVAC maintenance
- Reduces pathogens that cause sickness and disease
- Improves occupant performance
- Increases energy savings

Models

The ADPL is available in three lamp sizes (35W, 60W, 95W), and single and double lamp configurations, to provide options for various duct sizes. All lamps are non-proprietary Philips lamps that are chill corrected down to 40 degrees Fahrenheit.

Works invisibly within existing HVAC systems to create a safe, comfortable, germ-free indoor environment.

Installed at the coil plenum and designed to achieve disinfection of the cooling coil surfaces.

Works 24/7 to keep air free and clear of airborne contaminants.

Neutralizes and eliminates the infectious airborne pathogens that cause respiratory illness and disease.

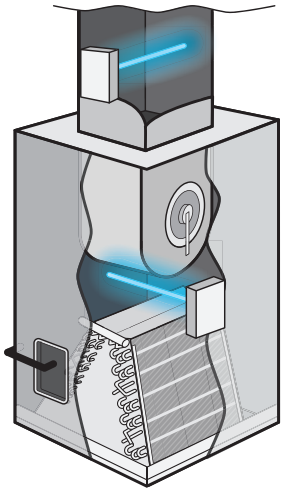

ADPL Series

IN AHU AND IN DUCT UVC FIXTURES

ADPL UV Air Fixture Product Specifications

(Single and Dual Lamp Models)

Standard Specifications

Lamp Specs	PL-L 35W, 60W, 95W TUV (non-proprietary)
Wavelength	254 Nanometers*
Expected Lamp/ Bulb Rated Life[1]	18 months
Lamp Socket	Single Ended, 4 Pin, 2G11
Input Voltage	Self Regulated Electronic UV Ballast 120V to 250V
Electrical Requirement	See Ordering Guide
Housing Finish	Aluminum
Weight	ADPL 1 Light - 8 lbs. ADPL 2 Light - 12 lbs.
Certifications:	

ASHRAE	meets ASHRAE TC 2.09
EPA[2]	EST. NO. 91347-TN-001
ETL	CDR100230620ATL-001A

Warranty	Lamps/2 years; Parts/5 years

*Lumalier ADPL Fixtures don't produce ozone. UVC technology is endorsed by the EPA, ASHRAE, FEMA, the CDC, and many other health organizations.

[1]With 80% utilization

[2]The manufacturer is registered with the US EPA. Clinical lab testing has been performed in independent labs.

In AHU Fixture Series Ordering Guide

Model#	Description
ADPL-135	One 35W Lamp 0.3A @ 120V, 0.15A @ 240V
ADPL-235	Two 35W Lamps 0.60A @ 120V, 0.30A @ 240V
ADPL-160	One 60W Lamp 0.50A @ 120V, 0.25A @ 240V
ADPL-260	Two 60W Lamps 1.0A @ 120V, 0.30A @ 240V
ADPL-195	One 95W Lamp 0.80A @ 120V, 0.40A @ 240V
ADPL-295	Two 95W Lamps 1.6A @ 120V, 0.80A @ 240V
Daisy Chain Option	
ADPL-135-DC	One 35W Lamp 0.30A @ 120V, 0.15A @ 240V
ADPL-235-DC	Two 35W Lamps 0.60A @ 120V, 0.30A @ 240V
ADPL-160-DC	One 60W Lamp 0.50A @ 120V, 0.25A @ 240V
ADPL-260-DC	Two 60W Lamps 1.0A @ 120V, 0.30A @ 240V
ADPL-195-DC	One 95W Lamp 0.80A @ 120V, 0.40A @ 240V
ADPL-295-DC	Two 95W Lamps 1.6A @ 120V, 0.80A @ 240V

ADPL-135/160/195

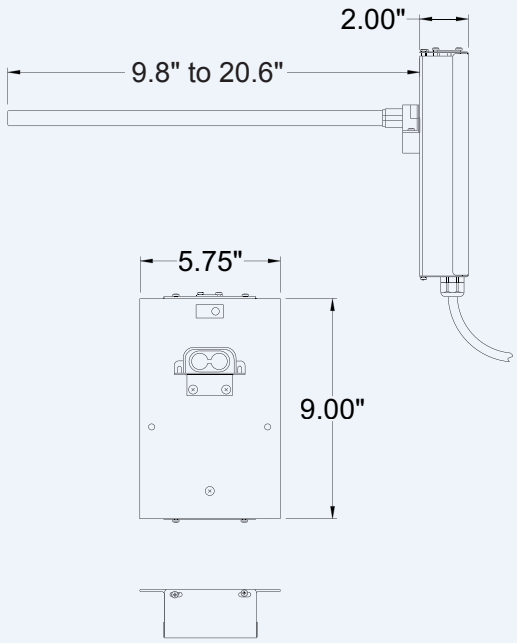

ADPL-235/260/295

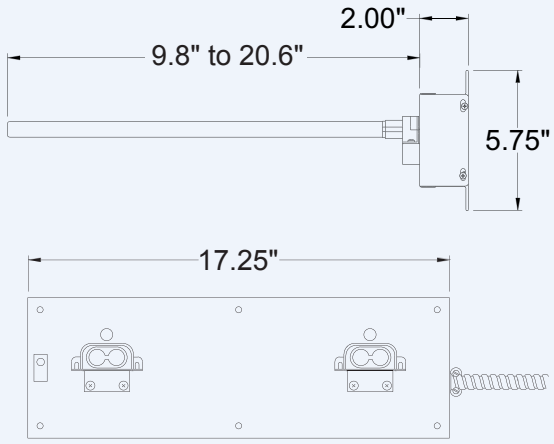

Due to continuing research, Lumalier reserves the right to change specifications without notice.

©2023 Lumalier. All Rights Reserved.

LUMALIER

AR Series

IN AHU AND IN DUCT UVC FIXTURES

Our commercial AR series UVC fixtures are designed for effective coil cleaning and improved indoor air quality (IAQ) in any type of AHU system and are prewired at the factory for code compliance and easy install. The fixtures are constructed to be amazingly durable, scalable to custom fit any AHU, and are engineered with non-proprietary lamps and ballasts.

Features

- **'Boxed I-beam' Aluminum Unistrut Extrusion Construction**
  Horizontal and vertical adjustable support and lamp structures are rated to support more than 2000 lb. / in^2.
- **Water-proof Electrical Quick-connects**
  Metal-clad, three-pin modular quick-connects permit fast, easy, installation of any size AR fixture.
- **Metal-clad Wiring and Connectors**
  No wire coverings, rubber, plastic, or other degradable within the AHU; meets all local, state and national codes.
- **Magnetic 'Proximity' Door Switches**
  Magnetic proximity door switches are guaranteed to switch 10,000,000 times to eliminate installation adjustments and service call-back costs.
- **Accessible Ballasts**
  Philips / Advance electronic UVC ballasts mount directly to the Unistrut to reduce heat, improve product life, and are enclosed in an easily removable ballast cover for simple maintenance.

Works invisibly within existing HVAC systems to create a safe, comfortable, germ-free indoor environment.

Slide-out fixture option for modular AHUs; removable option for modular AHUs, provides fast, simple, tool-less options for easy maintenance and lamp replacement.

Works 24/7 to keep air free and clear of airborne contaminants.

Neutralizes and eliminates the infectious airborne pathogens that cause respiratory illness and disease.

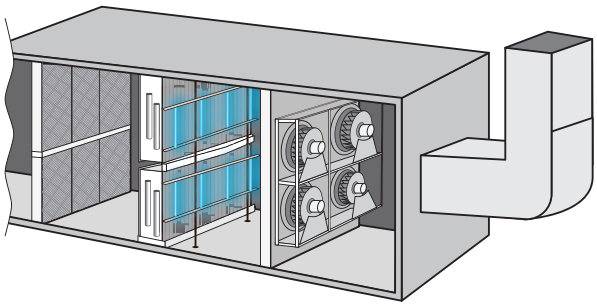

www.lumalier.com 1931 Thomas Road | Memphis TN 38134 | 901-800-1709 or 1-888-610-1709

AR Series

IN AHU AND IN DUCT UVC FIXTURES

Product Specifications

Standard Specifications	
Lamp Specs	PL-L 60W, 95W TUV (non proprietary)
Wavelength	254 Nanometers
Expected Lamp/Bulb Rated Life[1]	18 months
Lamp Socket	Single Ended, 4 Pin, 2G11
Input Voltage	Self Regulated Electronic UV Ballast 120V to 277V
Electrical Requirement	Varies by Model
Housing Finish	Aluminum
Certifications:	ASHRAE: meets ASHRAE TC 2.09 EPA[2]: EST. NO. 91347-TN-001 ETL: CDR100230620ATL-001A
Warranty	Lamps/2 years; Parts/5 years

[1]With 80% utilization

[2]The manufacturer is registered with the US EPA. Clinical lab testing has been performed in independent labs.

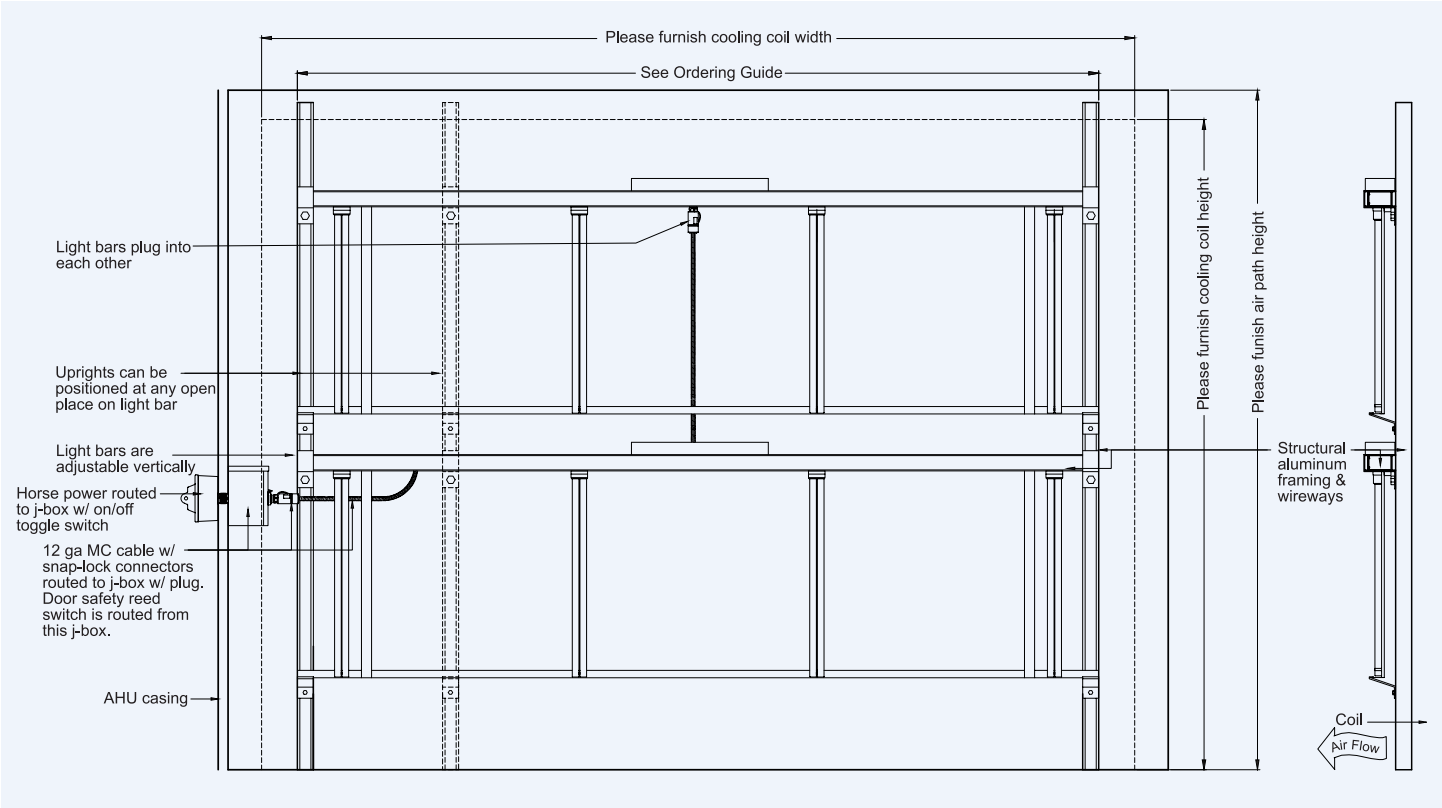

©2021 Lumalier. All Rights Reserved.

AR Series

COMMERCIAL IN DUCT UVC FIXTURES

Sizing Guide

Effective February 1st, 2021

99%* disinfection rate		DUCT WIDTH								
		24″-40″	41″-55″	56″-70″	71″-85″	86″-100″	101″-115″	116″-130″	131″-145″	146″-160″
DUCT HEIGHT	28″-59″	1x2	1x3	1x4	1x5	1x6	1x7	1x8	1x9	1x10
	60″-99″	2x2	2x3	2x4	2x5	2x6	2x7	2x8	2x9	2x10
	100″-150″	3x2	3x3	3x4	3x5	3x6	3x7	3x8	3x9	3x10

Note: Number of Rows x Number of Lamps (Ex. 1x2 = 1 Row x 2 Lamps)

Ordering Guide			
AR95-	ADJUSTABLE IN DUCT RACK UVC RACK WITH 95 WATT UVC HO LAMP		
	Number of Rows Required (See sizing grid for correct number of rows)		
	1	ROW OF LAMPS	
	2	ROW OF LAMPS	
	3	ROW OF LAMPS	
		Number of Lamps Per Row (See sizing guide for correct number of lamps)	
		x2-15	TWO 95 WATT HIGH OUTPUT LAMPS WITH 15 INCH SPACING
		x3-15	THREE 95 WATT HIGH OUTPUT LAMPS WITH 15 INCH SPACING
		x4-15	FOUR 95 WATT HIGH OUTPUT LAMPS WITH 15 INCH SPACING
		x5-15	FIVE 95 WATT HIGH OUTPUT LAMPS WITH 15 INCH SPACING
		x6-15	SIX 95 WATT HIGH OUTPUT LAMPS WITH 15 INCH SPACING
		x7-15	SEVEN 95 WATT HIGH OUTPUT LAMPS WITH 15 INCH SPACING
		x8-15	EIGHTH 95 WATT HIGH OUTPUT LAMPS WITH 15 INCH SPACING
		x9-15	NINE 95 WATT HIGH OUTPUT LAMPS WITH 15 INCH SPACING
		x10-15	TEN 95 WATT HIGH OUTPUT LAMPS WITH 15 INCH SPACING
AR95-	2	x4-15	Adjustable Rack with four 95 watt high output bulbs, 2 rows of lamp bars, 4 lamps on each bar, with 15 inch lamp spacing on each bar

* Assumptions:

1. 8 Feet of plenum length @ 500 FPM = one second of dwell (treatment) time. Adjust dwell time based on available plenum length. Ex/ 4 Feet @ 500 FPM = 1/2 second of dwell time
2. Air moving at less than 500 FPM will improve peformance.
3. Reflectivity is not considered for the sizing guide. Call a Lumalier sales rep to discuss reflectivity variables.
4. Disinfection rates will vary based on filtering and number of air passes.

LUMALIER www.lumalier.com 1931 Thomas Road | Memphis TN 38134 | 901-800-1709 or 1-888-610-1709

©2021 Lumalier. All Rights Reserved.

AR Series

COMMERCIAL IN DUCT UVC FIXTURES

Sizing Guide

Effective February 1st, 2021

95%* disinfection rate		**DUCT WIDTH**				
		34″-57″	58″-81″	82″-109″	110″-133″	134″-160″
DUCT HEIGHT	28″-59″	1x2	1x3	1x4	1x5	1x6
	60″-99″	2x2	2x3	2x4	2x5	2x6
	100″-150″	3x2	3x3	3x4	3x5	3x6

Note: Number of Rows x Number of Lamps (Ex. 1x2 = 1 Row x 2 Lamps)

Ordering Guide			
AR95-	ADJUSTABLE IN DUCT RACK UVC RACK WITH 95 WATT UVC HO LAMP		
	Number of Rows Required (See sizing grid for correct number of rows)		
	1	ROW OF LAMPS	
	2	ROW OF LAMPS	
		Number of Lamps Per Row (See sizing guide for correct number of lamps)	
		x2-24	TWO 95 WATT HIGH OUTPUT LAMPS WITH 24 INCH SPACING
		x3-24	THREE 95 WATT HIGH OUTPUT LAMPS WITH 24 INCH SPACING
		x4-24	FOUR 95 WATT HIGH OUTPUT LAMPS WITH 24 INCH SPACING
		x5-24	FIVE 95 WATT HIGH OUTPUT LAMPS WITH 24 INCH SPACING
		x6-24	SIX 95 WATT HIGH OUTPUT LAMPS WITH 24 INCH SPACING
AR95-	2	x3-24	Adjustable Rack with three 95 watt high output bulbs, 2 rows of lamp bars, 3 lamps on each bar, with 24 inch lamp spacing on each bar

* Assumptions:

1. 8 Feet of plenum length @ 500 FPM = one second of dwell (treatment) time. Adjust dwell time based on available plenum length. Ex/ 4 Feet @ 500 FPM = 1/2 second of dwell time
2. Air moving at less than 500 FPM will improve peformance.
3. Reflectivity is not considered for the sizing guide. Call a Lumalier sales rep to discuss reflectivity variables.
4. Disinfection rates will vary based on filtering and number of air passes.

LUMALIER www.lumalier.com 1931 Thomas Road | Memphis TN 38134 | 901-800-1709 or 1-888-610-1709

©2021 Lumalier. All Rights Reserved.

Accessories for In Duct UVC Fixtures

Effective February 1st, 2021

One door switch, view port, exterior toggle switch with lock-out/tag-out, safety signage, and set of lamps are included with each AR Fixture. Additional units are available as priced below.

Fixed Radiometer	Digital LCD readout with LED and audible alarms, 3 ports for BAS connectivity
Interior Door Interlock Safety Switch with J-box	Included in all AR racks; Price is for additional units for additional doors (optional)
2″ glass view port and safety information	Included in all AR racks; Price is for additional units for additional doors (optional)
Exterior switch/ J-box for mounting near access door	Included in all AR racks; Price is for additional units for additional doors (optional)
Lock-out / tag-out switch cover	Included in all AR racks; Price is for additional units for additional doors (optional)
Clip-on UVC reflector	Directs UVC energy towards coils & away from surfaces, prevents line of sight exposure
Install kit: safety glasses, gloves, 2 warning labels	Included in all AR-60 racks listed above; price is for extra kits, if needed
Photocatalytic Oxidation (PCO) lamp protector	Optional PCO reduces Volatile Organic Compounds (VOC's) & eliminate odors

Philips UV high performance (HO), non-proprietary, long-life germicidal lamps (Philips lamps contain less than 5mg of HG)

	nominal watts	Base			direct µW intensity at 1 meter
TUV PL-L 18W	18 W	twin tube, 4 pin	replace annually < 5Mg, Hg	Philips UV-C lamp, ambient, 9″	54 µW
TUV PL-L 35W HO	35 W	twin tube, 4 pin	replace annually < 5Mg, Hg	Philips UV-C lamp, chill corrected, 9″	105 µW
TUV PL-L 36W	36 W	twin tube, 4 pin	replace annually < 5Mg, Hg	Philips UV-C lamp, ambient, 16″	108 µW
TUV PL-L 60W HO	60 W	twin tube, 4 pin	replace annually < 5Mg, Hg	Philips UV-C lamp, chill corrected, 16″	180 µW
TUV-PL-L 55W	55 W	twin tube, 4 pin	replace annually < 5Mg, Hg	Philips UV-C lamp, ambient, 20”	165 µW
TUV-PL-L 95W HO	95 W	twin tube, 4 pin	replace annually < 5Mg, Hg	Philips UV-C lamp, chill corrected, 20″	285 µW

©2021 Lumalier. All Rights Reserved.

LUMALIER

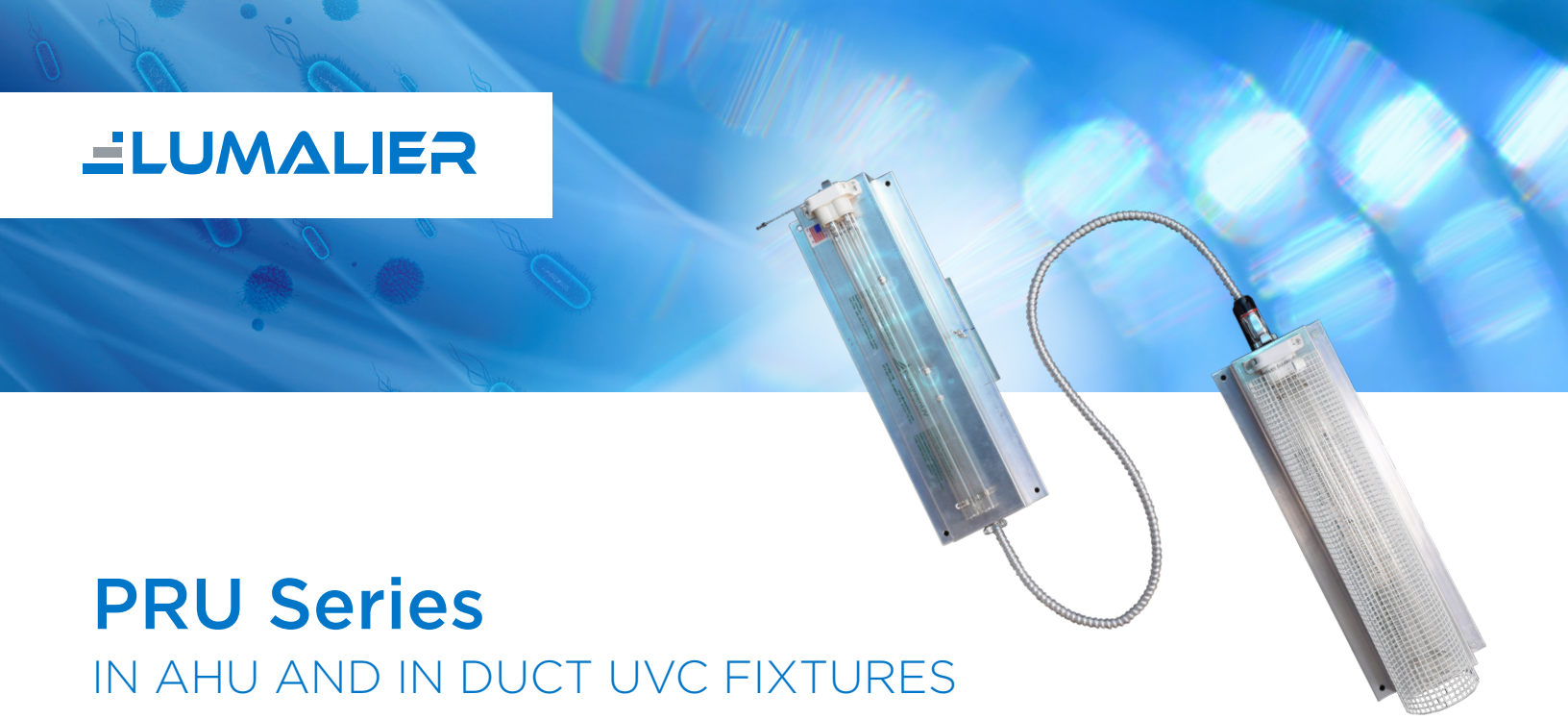

PRU Series

IN AHU AND IN DUCT UVC FIXTURES

Polluted indoor air contaminants (pollution) can include airborne particulates, germs (virus, bacteria, and fungus), chemicals, and gasses.

Our PRU Series UVC Fixtures are engineered for light commercial applications in packaged/rooftop air handlers (AHUs). These In-AHU and In-Duct UVC fixtures provide solutions for disinfection throughout businesses and can also be used in some residential applications. Benefits include:

- Reduces odors
- Reduces HVAC maintenance
- Reduces pathogens that cause sickness and disease
- Improves occupant performance
- Increases energy savings
- Does not produce ozone or harmful volatile organic compounds (VOC).

Models

The PRU is available in two lamp sizes (60W, 95W) and in lamp configurations ranging from one to five lamps. Our sturdy quick-connect allows for lamp additions to modify your configuration and provide an easy install. All lamps are non-proprietary Philips lamps that are chill corrected to treat cold moving air.

Maintains high level air disinfection by neutralizing and eliminating the infectious airborne pathogens that cause respiratory illness and disease.

Disinfects air and surfaces in packaged and rooftop A/C & heating units.

Works 24/7 to keep air free and clear of airborne contaminants.

Neutralizes and eliminates the infectious airborne pathogens that cause respiratory illness and disease.

PRU Series

IN AHU AND IN DUCT UVC FIXTURES

Standard Specifications

Lamp Specs	PL-L 60W, 95W TUV (non proprietary)
Wavelength	254 Nanometers
Expected Lamp/ Bulb Rated Life[1]	18 months
Lamp Socket	Single Ended, 4 Pin, 2G11
Lamp Qty.	4 x 35W UVC High Output Lamps
Input Voltage	Self Regulated Electronic UV Ballast 120V to 277V
Housing Finish	Aluminum
Electrical Requirement	60W – 0.5A @ 120V, 0.25A @ 240V 95W – 0.8A @ 120V, 0.4A @ 240V
Certifications:	

ASHRAE	meets ASHRAE TC 2.09
EPA[2]	EST. NO. 91347-TN-001
ETL	CDR100230620ATL-001A

Warranty	Lamps/2 years; Parts/5 years

Ordering Guide

Model	Description
PRU-160	One 60 W, High Output 16″ lamp, 180° disinfection
PRU-260	Two 60 W, High Output 16″ lamps, daisy-chain, 180° disinfection
PRU-360	Three 60 W, High Output 16″ lamps, daisy-chain, 180° disinfection
PRU-460	Four 60 W, High Output 16″ lamps, daisy-chain, 180° disinfection
PRU-560	Five 60 W, High Output 16″ lamps, daisy-chain, 180° disinfection
PRU-195	One 95 W, High Output 20″ lamps, daisy-chain, 180° disinfection
PRU-295	Two 95 W, High Output 20″ lamps, daisy-chain, 180° disinfection
PRU-395	Three 95 W, High Output 20″ lamps, field placement, 180° disinfection
PRU-495	Four 95 W, High Output 20″ lamps, field placement, 180° disinfection

[1]With 80% utilization
[2]The manufacturer is registered with the US EPA. Clinical lab testing has been performed in independent labs.

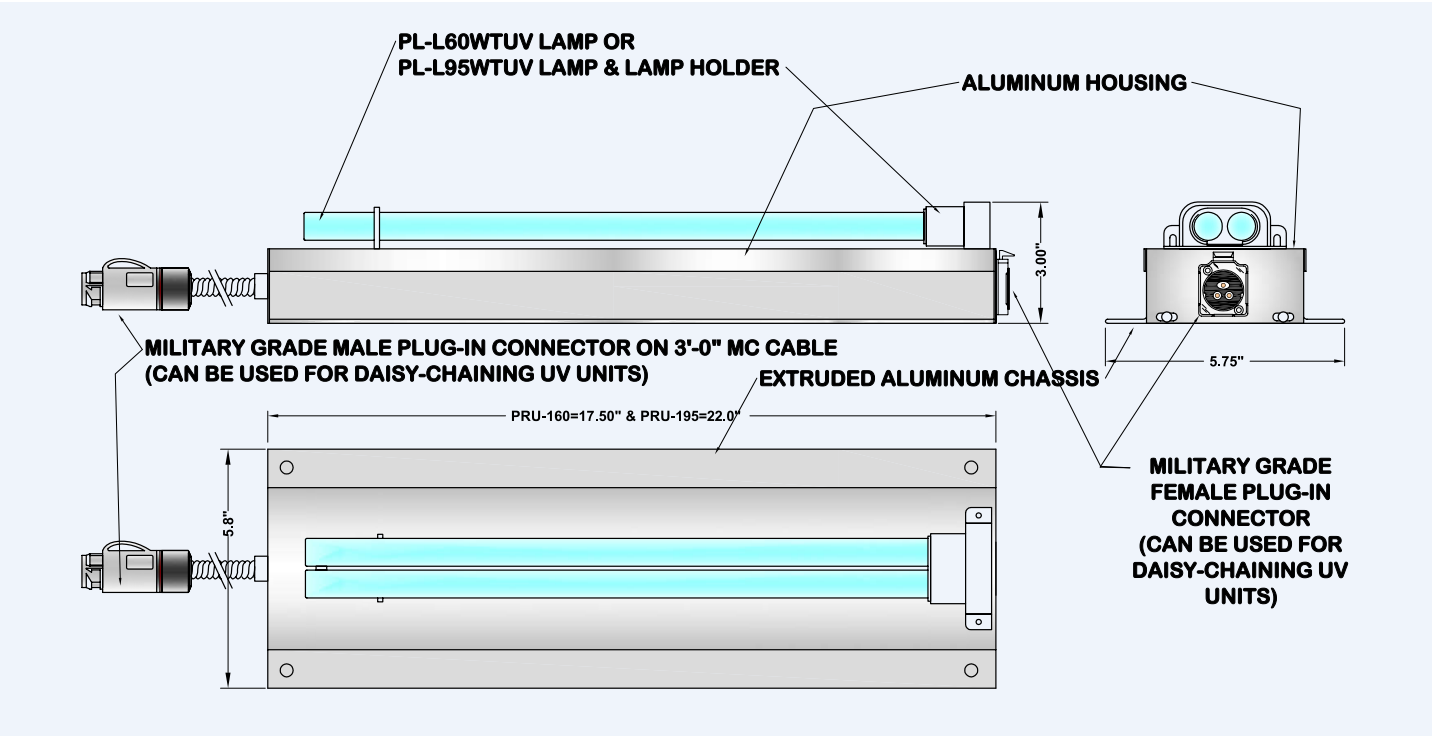

Due to continuing research, Lumalier reserves the right to change specifications without notice.

LUMALIER www.lumalier.com 1931 Thomas Road | Memphis TN 38134 | 901-800-1709 or 1-888-610-1709

©2021 Lumalier. All Rights Reserved.

SDV

SINGLE DUCT TERMINAL UNIT

price | TERMINAL UNITS

SDV
Single Duct Terminal Unit

With minimal pressure drop and low sound levels, the SDV controls the volume of conditioned air into an occupied space in response to a thermostat control signal. Incorporation of an airflow sensor allows the SDV to compensate instantly for any change in supply air pressure that might alter the supply volume, resulting in a pressure independent variable air volume system.

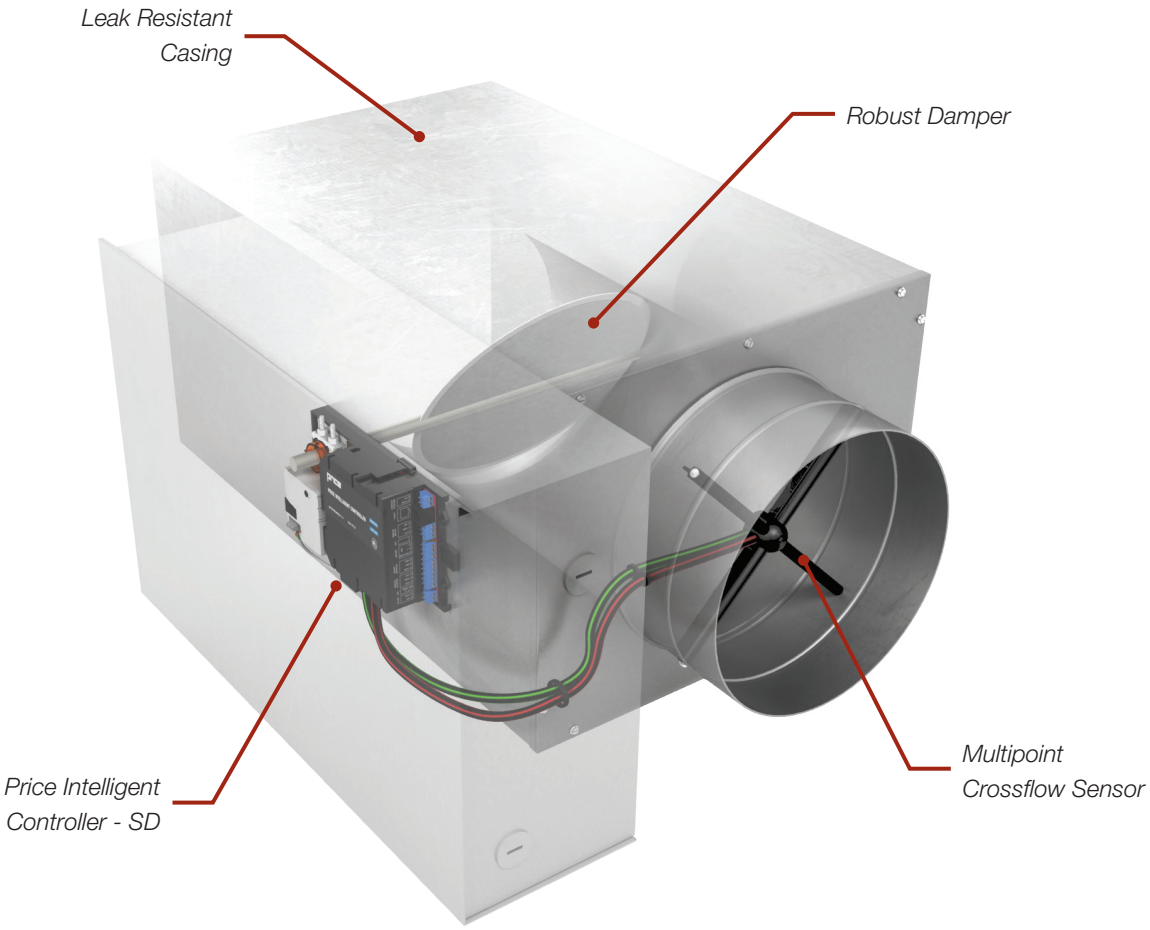

EXTREME VERSATILITY

Available with a multitude of accessories including liners, controls, reheat options, and sound attenuators, the SDV is well suited to almost any application. A compact configuration makes this unit easy to use in crowded mechanical spaces for new construction or retrofit projects.

ENGINEERED PERFORMANCE

The clean and efficient design of this single duct terminal unit results in a system component with minimal pressure drop, reducing fan horsepower requirements and sound generation.

OVERSIZED CASING

Sizes 4 to 16 are available with an optional oversized casing to accommodate larger water coils, which reduces air pressure drop by increasing the face area, without sacrificing control of low airflows.

6" inlet with regular (6") casing

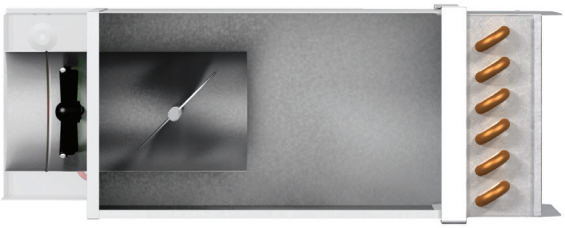

6" inlet with oversized (8") casing

TYPICAL APPLICATIONS

Designed to control the flow of conditioned air into an occupied space, single duct terminal units can be used in almost any application. A variety of accessories are available to tailor this unit to specific applications including those with stringent requirements for sound levels, temperature, and energy efficiency.

STANDARD DESIGN

- Heavy gauge damper with polyurethane gasket rated for up to 1.25 million cycles
- Multipoint center averaging crossflow sensor for accurate airflow measurement
- Slip and drive connection for quick installation

OPTIONAL FEATURES

- Multiple liner options
- Electric reheat
- Hot water reheat
- Attenuators - 3 ft. and 5 ft.
- Integral silencers (SDVQ)
- Certified low leakage construction
- Oversized Casing
- Low Profile Construction (SDVLP)

HOT WATER REHEAT

Price water coils are constructed from high quality materials and are AHRI 410 certified. Designed to optimize heat transfer and minimize pressure drop, water coils are available in high capacity and oversized configurations to meet the requirements of every project. For ease of maintenance, optional access doors are available for upstream or downstream installation, with a variety of fastening choices.

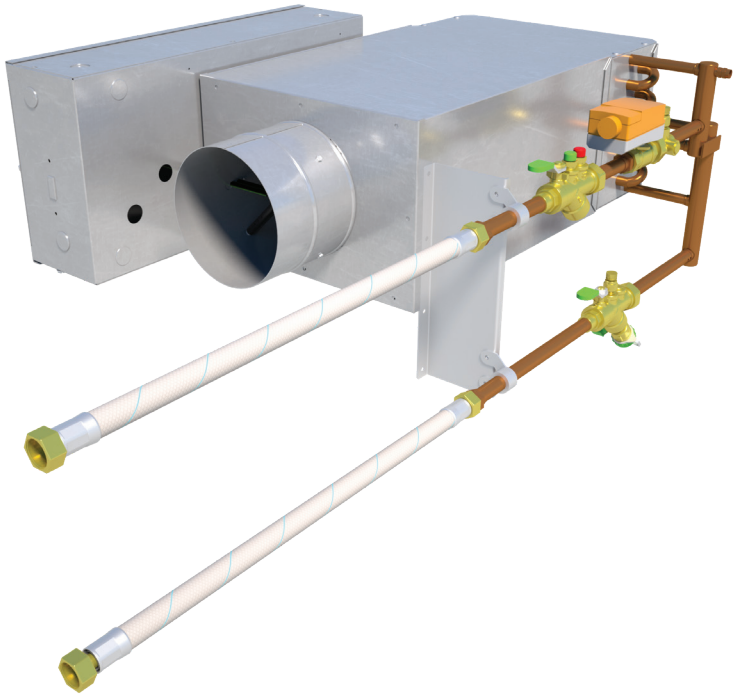

VALVE PACKAGES

Hot water coils are available with a factory leak-tested valve package for simplicity and ease of installation. Each valve package is available with the following options:

- 2-way or 3-way valves
- Manual or automatic balancing valve
- TCV supplied by Price or supplied by others and factory mounted
- 1/2 in. or 3/4 in. piping package diameter

ELECTRIC REHEAT

Price electric coils are factory mounted, ETL listed to meet electrical safety standards, and comply with CSA 236/UL 1995. To simplify the installation process, single duct electric coils are field flippable allowing the coil to be reoriented between left and right hand configurations on site. Single duct electric heaters are a side-mounted, slide-in style, specifically designed to mount in the extended terminal casing allowing for easy field maintenance. To ensure safe operation, these electric heaters use thermal safety switches and low watt density heating elements to minimize hot spots.

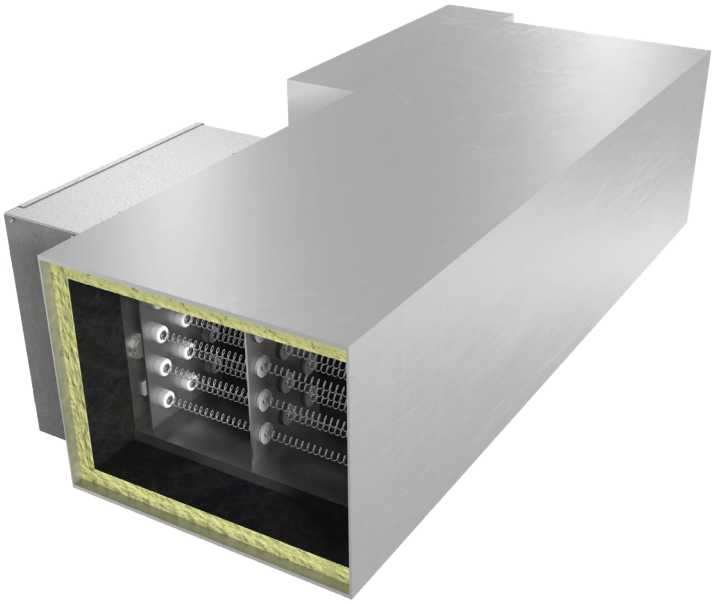

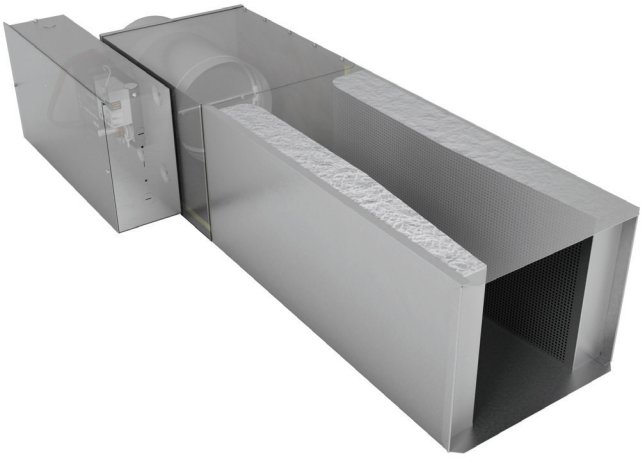

QUIET CONSTRUCTION

The SDV is available with an integral discharge attenuator for a cost-effective solution in applications where additional sound attenuation is required. Integral attenuators are available with any of the standard Price liner options.

Selection of VAV terminals with a close coupled, independent silencer is a complex process with unpredictable results. Price eliminates the guess work by providing an optimized, fully tested and AHRI certified assembly. The casing design and optimized silencer geometry reduce self-generated noise and pressure drop resulting in the quietest single duct terminal unit available.

SEISMIC CERTIFICATION

Selected product configurations are OSHPD seismic pre-approved, in compliance with CBC 2013 and IBC 2012. The following terminal units, accessories, and controllers are listed on OSP Special Seismic Certification Pre-Approval #OSP-0302-10:

+ SDV, all sizes, ceiling suspended with or without spring isolators.
+ SDV with quiet construction, all sizes, with 3 ft, 5 ft.
+ Single duct hot water coil, 1-4 rows, aluminum fins, copper tubes.
+ All Price liner options.
+ Price PIC controls as well as a variety of third party controls. See OSP-0302-10 for a list of approved controls.

ACCESSORIES

A variety of additional accessories are offered to meet specific job requirements. For information on these accessories please refer to the Terminal Units Accessories catalog.

CERTIFIED LOW LEAKAGE CONSTRUCTION

Certified low leakage (CLL) units are designed to target energy efficient installations where casing leakage and condensation prevention are important. Design features include:

+ Large compression style access doors with quarter-turn latches.

Each unit is factory leak tested to ensure casing leakage is less than 1% at 4in. w.g. and 1.5% at 6 in. w.g., meeting even the most stringent specifications.

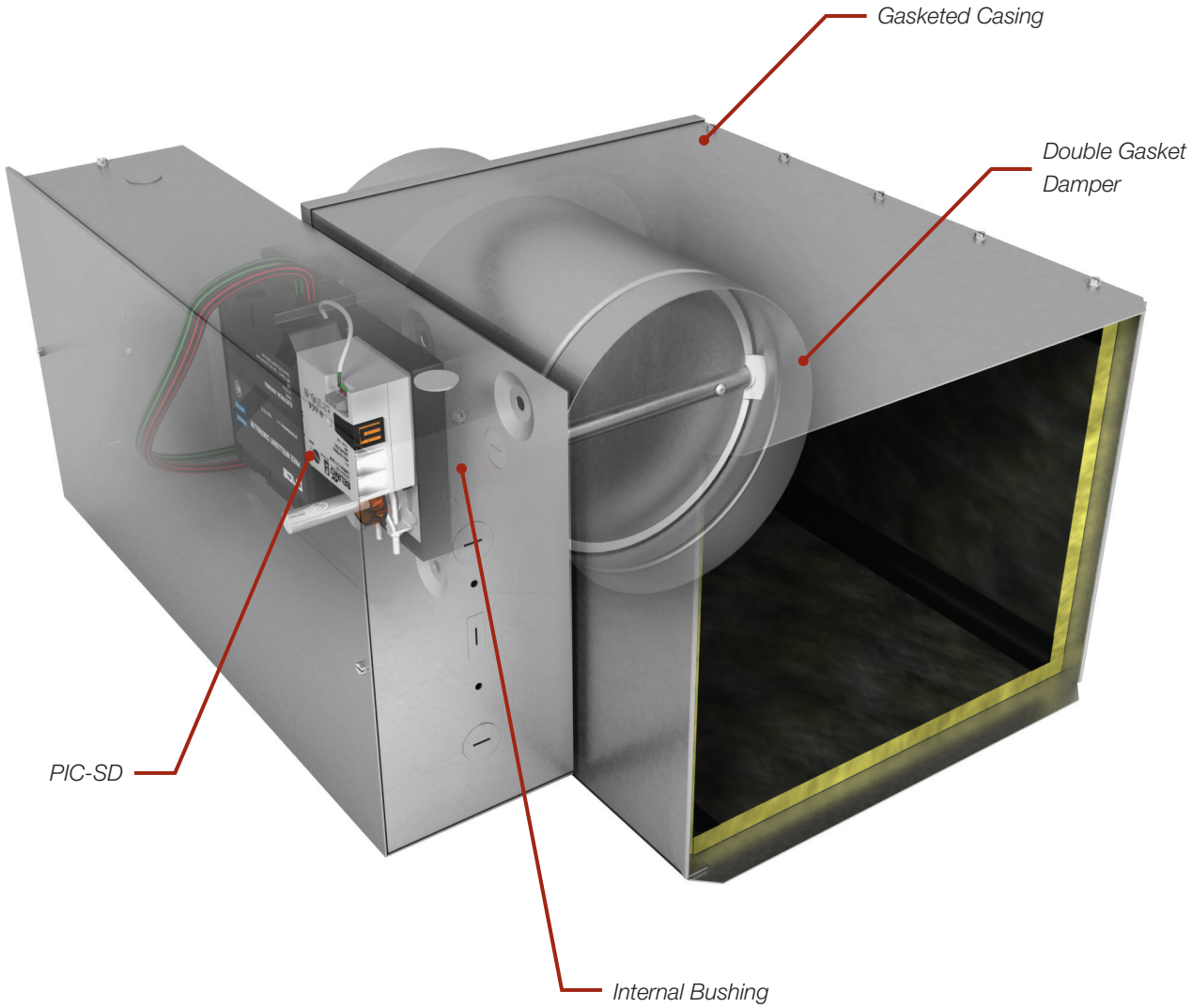

CONTROLS

Price offers a complete line of controls to best suit any application. For exceptional user comfort, the Price Intelligent Controller (PIC) universal DDC control package is available factory installed and configured on all SDV units. The PIC can be used in conjunction with any Price thermostat to match the specific needs of the customer and provide excellent energy efficiency.

DIMENSIONAL DATA

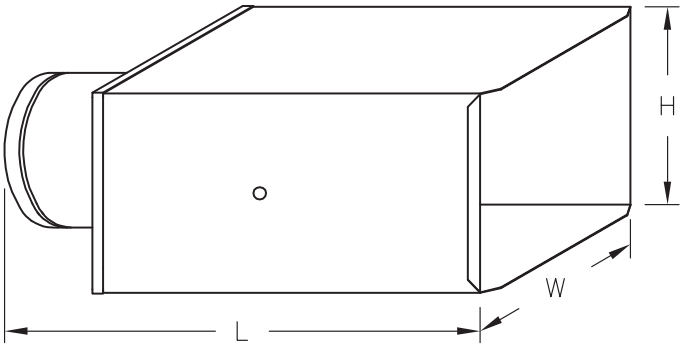

SDV

Size	Height (H)	Width (W)	Width (W) With Silencer	Length (L)					
				Basic Box*	With Electric Coil	With Attenuator ATT*	With Attenuator ATT5*	With Silencer FG Liner*	With Silencer PL/FC Liner*
4	8 in.	12 in.	12 in.	22 1/8 in.	42 3/16 in.	42 3/16 in.	81 1/8 in.	70 1/8 in.	70 1/8 in.
5									
6				20 1/8 in.	40 3/16 in.	40 3/16 in.	79 1/8 in.	68 1/8 in.	68 1/8 in.
7	10 in.								
8									
9	12 1/2 in.	14 in.	14 in.						
10									
12	15 in.	16 in.	24 in.						95 5/8 in.
14	17 1/2 in.	20 in.	28 in.	23 5/8 in.			82 5/8 in.	71 5/8 in.	
16	18 in.	24 in.	32 in.						
24 x 16**	18 in.	38 in.	46 in.	19 in.	38 1/2 in.	–	–	67 in.	91 in.

*For 1 and 2 row water coils, add 5 in. to length. For 3 and 4 row water coils, add 7 1/4 in. to length.
**Size 24 x 16 is provided with a rectangular inlet.

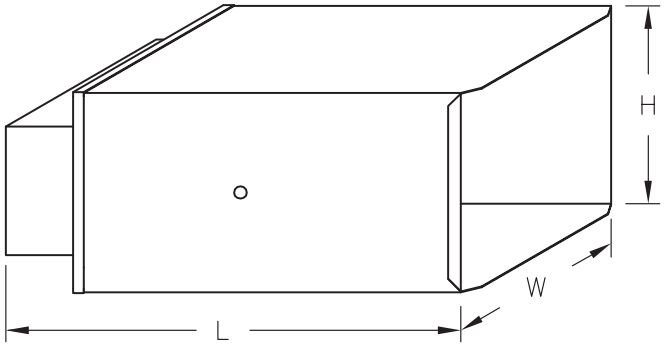

Low Profile SDV

Size	Height (H)	Width (W)	Length (L)			
			Basic Box	With Electric Coil	With Attenuator ATT	With Attenuator ATT5
9	10 in.	17 1/2 in.	20 1/8 in.	44 3/8 in.	40 3/16 in.	79 1/8 in.
10						
12		24 in.				
14		30 in.	23 5/8 in.			82 5/8 in.
16		38 in.				

PERFORMANCE DATA

SDV – AHRI Certification Rating Points

Unit Size	Rated Airflow	Minimum Operating Pressure Required	Radiated Sound Power Level, dB at 1.5 in.w.g. Octave Band						Discharge Sound Power Level, dB at 1.5 in.w.g. Octave Band					
	cfm	in.w.g.	2	3	4	5	6	7	2	3	4	5	6	7
4	150	0.01	56	49	41	35	31	30	71	66	56	52	50	45
5	250	0.01	59	51	44	36	32	28	72	67	59	54	51	48
6	400	0.14	62	57	49	43	38	33	76	71	63	57	52	49
7	550	0.07	61	54	47	38	32	29	75	71	60	55	53	50
8	700	0.01	61	55	46	39	33	28	76	70	61	57	54	51
9	900	0.01	60	54	49	41	36	32	74	69	61	58	56	54
10	1100	0.01	61	55	47	39	32	31	75	69	60	58	55	53
12	1600	0.01	61	55	52	44	37	35	74	68	63	60	57	55
14	2100	0.01	62	57	50	41	37	35	74	67	65	59	57	56
16	2800	0.01	62	59	53	48	44	37	74	67	64	62	60	57
24x16	5300	0.01	73	68	62	53	47	40	82	79	74	72	71	66

Performance Notes:
1. CFM, cubic feet per minute.
2. Inches of water gauge (in.w.g.)
3. Sound power levels expressed in decibels, (dB) re 10^{-12} Watts.

PERFORMANCE DATA

SDV – Recommended Air Volume Ranges

Digital Controls

Unit Size	cfm Min.[3]	cfm Max.
4	45	400
5	60	500
6	65	550
7	95	800
8	125	1100
9	160	1400
10	210	1800
12	300	2600
14	430	3700
16	575	5000
24 x 16	1185	8400

Notes:

1. Factory calibrated controls must be selected within the above flow range limits. A minimum value of 0 is also available. When an auxiliary flow setting is specified, the value must be greater than the minimum setting and within the range limits.
2. On controls mounted by Price but supplied by others, the air volume ranges are guidelines only.
3. Minimum airflow limit for digital controls is based on min 0.02 in.w.g. differential pressure signal from airflow sensor. Maximum airflow limit is based on max 1.5 in.w.g. differential pressure signal from airflow sensor.
4. Selection of airflow limits outside the listed values is not recommended. Stability and accuracy may not be acceptable at lower than recommended airflow limits. The actual performance will vary depending on the terminal unit controls supplied.

PERFORMANCE DATA

SDV – Typical Selection Guide

Unit Size	Airflow cfm	Basic Unit in.w.g.	w/Atten. in.w.g.	Minimum ΔPs Across Assembly in.w.g.		Discharge NC Basic Unit ΔPs Across Unit			Discharge NC c/w 36 in. Attenuator ΔPs Across Unit			Radiated NC Basic Unit ΔPs Across Unit		
				1 Row Coil	2 Row Coil	0.5 in.w.g.	1.5 in.w.g.	3.0 in.w.g.	0.5 in.w.g.	1.5 in.w.g.	3.0 in.w.g.	0.5 in.w.g.	1.5 in.w.g.	3.0 in.w.g.
4	75	0.01	0.01	0.02	0.03	--	--	--	--	--	--	--	--	--
	150	0.01	0.01	0.03	0.06	29	29	29	21	24	26	--	--	--
	200	0.01	0.01	0.04	0.09	35	35	35	26	29	31	21	22	23
	300	0.01	0.01	0.08	0.16	40	40	40	28	31	33	29	31	31
	400	0.01	0.01	0.12	0.25	46	46	47	33	36	38	35	36	37
5	125	0.01	0.01	0.03	0.05	--	--	20	--	--	--	--	--	--
	250	0.01	0.01	0.06	0.12	24	30	33	--	24	28	--	20	23
	300	0.01	0.01	0.08	0.16	23	29	32	--	23	27	--	24	27
	400	0.01	0.01	0.12	0.25	27	34	38	--	27	31	22	29	32
	500	0.01	0.01	0.16	0.35	31	38	42	22	30	34	26	32	36
6	150	0.02	0.02	0.04	0.07	--	20	23	--	--	--	--	--	--
	225	0.05	0.05	0.09	0.14	20	26	30	--	20	24	--	--	20
	300	0.08	0.08	0.15	0.23	21	27	31	--	--	23	--	21	25
	400	0.14	0.14	0.25	0.38	26	36	36	--	23	27	20	26	29
	550	0.27	0.27	0.45	0.67	31	37	41	21	27	31	25	31	34
7	250	0.02	0.02	0.06	0.10	--	23	26	--	--	20	--	--	--
	350	0.03	0.03	0.09	0.17	--	24	28	--	--	21	--	--	20
	550	0.07	0.07	0.20	0.37	25	31	36	--	24	28	--	24	27
	625	0.1	0.1	0.26	0.47	27	33	38	--	25	30	20	25	29
	800	0.16	0.16	0.41	0.72	28	36	41	20	27	32	23	28	33
8	400	0.01	0.01	0.09	0.19	--	22	26	--	--	21	--	--	21
	500	0.01	0.01	0.12	0.27	20	26	30	--	--	24	--	--	24
	700	0.01	0.01	0.21	0.46	26	31	36	--	24	28	--	24	29
	900	0.01	0.01	0.31	0.69	27	34	38	--	24	29	22	28	33
	1100	0.01	0.01	0.43	0.96	31	37	41	--	27	32	26	31	36
9	450	0.01	0.01	0.06	0.13	--	22	28	--	--	25	--	--	22
	700	0.01	0.01	0.12	0.25	--	26	33	--	22	28	--	21	26
	900	0.01	0.01	0.17	0.38	20	27	34	--	22	29	--	23	29
	1100	0.01	0.01	0.24	0.52	23	30	37	--	24	30	--	25	31
	1400	0.01	0.01	0.35	0.77	26	33	39	--	26	32	20	28	33
10	550	0.01	0.01	0.08	0.17	--	21	28	--	--	23	--	--	22
	950	0.01	0.01	0.19	0.41	--	26	32	--	21	27	--	22	28
	1100	0.01	0.01	0.24	0.52	--	28	34	--	23	28	--	24	30
	1500	0.01	0.01	0.39	0.87	23	31	38	--	26	32	21	27	33
	1800	0.01	0.01	0.53	1.17	25	34	40	20	28	34	23	30	35
12	900	0.01	0.01	0.11	0.23	--	21	29	--	--	25	--	20	26
	1200	0.01	0.01	0.17	0.37	--	24	31	--	22	28	--	24	29
	1600	0.01	0.01	0.27	0.58	--	26	33	--	24	31	--	26	32
	1800	0.01	0.01	0.32	0.71	--	28	34	--	25	32	--	28	34
	2600	0.01	0.01	0.58	1.29	21	32	38	21	30	36	23	32	38
14	1000	0.01	0.01	0.08	0.16	--	--	27	--	23	30	--	--	26
	1500	0.01	0.01	0.14	0.29	--	22	30	--	25	32	--	23	30
	2100	0.01	0.01	0.23	0.50	--	26	33	--	28	35	--	26	34
	2700	0.01	0.01	0.35	0.76	--	28	35	--	29	36	--	29	36
	3700	0.01	0.01	0.58	1.28	20	31	38	20	32	39	23	33	40
16	1500	0.01	0.01	0.10	0.21	--	20	28	--	21	29	--	22	29
	2000	0.01	0.01	0.15	0.33	--	23	31	--	24	32	--	25	32
	2600	0.01	0.01	0.23	0.50	--	26	33	--	26	34	--	28	35
	3200	0.01	0.01	0.32	0.70	--	28	35	--	28	36	20	31	38
	4000	0.01	0.01	0.46	1.01	--	30	37	--	31	38	23	33	40
	5000	0.01	0.01	0.67	1.47	20	32	40	21	33	40	26	36	43
24x16	3000	0.01	0.01	0.16	0.33	23	32	37	--	27	32	24	31	35
	4000	0.01	0.01	0.25	0.52	27	35	41	23	31	36	29	35	39
	5300	0.01	0.01	0.39	0.83	30	39	44	27	35	40	30	39	43
	6000	0.01	0.01	0.47	1.02	32	41	46	28	37	42	31	41	45
	7000	0.01	0.01	0.61	1.32	34	42	48	30	39	44	32	43	47
	8400	0.01	0.01	0.83	1.80	36	45	50	33	41	46	33	46	50

Performance Notes:

1. NC's are derived from sound power levels, which are obtained in accordance with AHRI Standard 880-2017 and ASHRAE Standard 130-2016.
2. Dashes (--) indicate sound power levels below 20.
3. ΔPs is the difference in static pressure from inlet to discharge of the unit.
4. NC values are calculated based on typical attenuation values outlined in Appendix E, AHRI Standard 885-2008, "A Procedure for Estimating Occupied Space Sound Levels in the Application of Air Terminals and Air Outlets."

Radiated NC is based on 5/8" mineral fiber tile ceiling per AHRI 885-2008 attenuation values.

Radiated Sound

Total Deduction	Octave Band Mid Frequency, Hz					
	120	250	500	1000	2000	4000
All Sizes	18	19	20	26	31	36

Discharge NC is based on environmental effect, end reflection, flex duct, sound power division and lined duct per AHRI 885-2008 attenuation values

Discharge Sound

Total Deduction	Octave Band Mid Frequency, Hz					
	120	250	500	1000	2000	4000
< 300 cfm	24	28	39	53	59	40
300-700 cfm	27	29	40	51	53	39
> 700 cfm	29	30	41	51	52	39

PERFORMANCE DATA

SDV – Discharge Sound Power Levels, Basic Assembly

Unit Size	Airflow cfm	Sound Power Levels Lw dB re 10^{-12} Watts																							
		0.5 in.w.g.						1.0 in.w.g.						1.5 in.w.g.						3.0 in.w.g.					
		Octave Band						Octave Band						Octave Band						Octave Band					
		2	3	4	5	6	7	2	3	4	5	6	7	2	3	4	5	6	7	2	3	4	5	6	7
4	75	60	53	41	37	35	31	60	53	43	40	39	35	60	53	45	42	42	38	60	54	48	45	46	41
	150	71	65	51	47	43	39	71	66	54	51	48	43	71	66	56	52	50	45	71	66	58	56	55	49
	200	76	71	56	52	47	43	76	71	58	55	51	46	76	71	60	57	54	49	76	72	63	60	58	53
	275	81	77	60	56	51	46	81	77	63	59	55	50	81	77	65	61	58	52	81	78	68	64	62	56
5	125	58	52	44	40	36	33	61	55	48	43	41	38	62	56	50	45	44	41	64	59	54	49	49	47
	250	69	63	53	48	43	40	71	66	57	52	48	45	72	67	59	54	51	48	74	70	63	57	56	53
	300	71	66	56	51	45	41	74	68	60	54	50	47	75	70	62	56	53	50	77	72	66	60	58	55
	375	75	69	59	54	47	43	77	72	63	57	52	49	78	73	65	59	55	52	80	76	69	63	60	57
6	150	60	51	43	39	34	33	62	55	47	43	40	39	64	57	50	45	44	42	67	61	54	49	49	49
	225	64	57	49	44	38	35	67	61	53	48	44	42	69	63	55	50	47	45	72	67	59	54	53	51
	300	68	61	52	47	40	37	71	65	57	51	46	43	73	67	59	53	49	47	75	71	63	58	55	53
	400	72	66	56	50	43	39	74	69	61	55	48	45	76	71	63	57	52	49	79	75	67	61	58	55
	550	75	70	61	54	45	41	78	74	65	58	51	47	80	76	67	61	54	51	83	80	72	65	60	57
7	250	62	52	42	40	37	35	65	57	47	44	43	41	66	60	50	46	46	44	69	64	55	50	51	50
	350	66	57	47	44	40	37	69	62	51	48	46	43	70	64	54	50	49	47	73	69	59	54	54	53
	550	71	63	53	49	44	41	74	68	57	53	50	46	75	71	60	55	53	50	78	75	65	59	58	56
	625	72	65	54	51	45	42	75	70	59	54	51	47	77	73	62	57	54	51	80	77	67	61	59	57
	800	75	69	58	53	47	43	78	73	62	57	53	49	80	76	65	60	56	53	82	81	70	64	62	58
8	400	64	54	46	44	40	36	67	59	50	47	46	43	69	61	53	49	49	46	72	66	57	52	54	52
	500	67	58	49	47	43	38	70	62	53	50	48	44	72	65	56	52	51	48	75	69	60	55	56	54
	700	72	63	54	52	46	41	75	67	58	55	51	47	76	70	61	57	54	51	80	74	65	60	60	57
	900	75	66	58	56	48	43	78	71	62	59	54	49	80	73	65	61	57	53	83	78	69	64	62	59
	1050	77	69	60	58	50	45	80	73	64	61	55	51	82	76	67	63	58	54	85	80	71	67	64	60
9	450	61	54	45	44	42	38	65	60	50	47	47	44	67	63	53	49	50	48	70	69	58	52	56	54
	700	66	58	51	50	46	42	70	64	56	53	51	48	72	67	58	55	54	52	75	73	63	58	59	58
	900	69	60	54	53	48	44	72	66	59	56	53	50	74	69	61	58	56	54	78	75	66	62	61	60
	1100	71	62	56	56	50	46	75	68	61	59	55	52	77	71	64	61	58	56	80	77	69	64	63	62
	1400	74	64	59	59	52	48	77	70	64	62	57	54	79	73	67	64	60	58	83	79	72	68	65	64
10	550	61	54	44	43	41	38	66	60	48	47	47	44	68	63	51	49	50	47	72	68	56	53	55	53
	950	67	60	50	50	46	43	71	65	55	54	51	48	73	68	58	56	54	52	78	73	63	60	60	58
	1100	68	61	52	52	47	44	72	66	57	56	52	50	75	69	60	58	55	53	79	75	65	62	61	59
	1500	71	64	56	56	50	46	75	69	61	60	55	52	78	72	64	62	58	56	82	78	68	66	63	61
	1800	73	66	58	58	51	48	77	71	63	62	56	54	80	74	66	64	60	57	84	79	71	68	65	63
12	900	61	54	49	46	44	42	66	60	54	51	49	48	69	64	57	54	52	51	74	70	62	59	58	57
	1200	63	56	52	49	46	44	69	62	57	54	52	50	72	66	60	57	55	53	77	72	66	62	60	59
	1600	66	58	55	52	49	46	71	64	60	57	54	52	74	68	63	60	57	55	79	74	69	65	62	61
	1800	67	59	56	53	49	47	72	65	62	58	55	53	75	69	65	61	58	56	80	75	70	66	63	62
	2500	70	61	60	57	52	49	75	67	65	62	57	55	78	71	69	64	60	59	83	77	74	69	66	65
14	1000	59	52	47	45	44	41	65	58	52	50	49	48	68	62	55	53	52	51	73	69	60	57	57	58
	1500	62	54	52	49	47	44	68	61	57	54	52	50	71	65	60	56	55	54	76	71	66	61	60	60
	2100	65	57	57	52	50	46	70	63	62	57	55	52	74	67	65	59	57	56	79	74	70	64	62	62
	2500	66	58	60	53	51	47	72	64	65	58	56	53	75	68	68	61	59	57	80	75	73	66	64	64
	3500	69	60	65	56	54	49	74	67	70	61	59	55	78	70	73	64	61	59	83	77	78	69	66	66
16	1500	60	52	49	49	47	43	66	59	55	54	52	49	69	63	58	57	56	53	75	70	63	62	62	60
	2000	62	54	53	51	49	45	68	61	58	56	54	51	72	65	61	59	58	55	77	72	66	65	63	62
	2500	64	56	55	53	50	46	70	63	60	58	56	53	73	67	63	61	59	56	79	73	68	67	65	63
	2800	65	57	56	54	51	47	71	63	61	59	57	53	74	67	64	62	60	57	80	74	70	68	66	64
	3500	67	58	59	56	52	48	73	65	64	61	58	55	76	69	67	64	61	59	82	76	72	69	67	65
	4500	69	60	61	58	54	50	74	67	67	63	60	56	78	71	70	66	63	60	84	77	75	71	69	67
24x16	3000	68	66	60	58	58	51	72	70	66	65	64	58	74	73	69	69	67	62	78	78	75	75	73	69
	4000	72	69	62	60	60	53	76	73	68	67	65	60	78	76	71	71	69	64	82	81	77	77	75	71
	5300	76	72	65	62	61	55	79	76	70	68	67	62	82	79	74	72	71	66	85	84	79	79	76	72
	6000	77	73	66	62	62	55	81	77	71	69	68	62	83	80	75	73	71	66	87	85	80	79	77	73
	7000	79	74	67	63	63	56	83	79	73	70	69	63	85	82	76	74	72	67	89	86	82	80	78	74
	8400	81	76	68	64	64	57	85	81	74	71	70	64	87	84	77	75	74	68	91	88	83	81	79	75

Performance Notes:

1. Test data obtained in accordance with AHRI Standard 880-2017 and ASHRAE Standard 130-2016.
2. Sound power levels include duct end corrections per AHRI Standard 880-2017.
3. AHRI certified data is highlighted in blue. All other data are application ratings.
4. Application ratings are outside the scope of the AHRI 880-2017 Certification Program.

PERFORMANCE DATA

SDV – Discharge Sound Power Levels with 3 ft Attenuator

Unit Size	Airflow cfm	Sound Power Levels Lw dB re 10^{-12} Watts																							
		0.5 in.w.g.						1.0 in.w.g.						1.5 in.w.g.						3.0 in.w.g.					
		Octave Band						Octave Band						Octave Band						Octave Band					
		2	3	4	5	6	7	2	3	4	5	6	7	2	3	4	5	6	7	2	3	4	5	6	7
4	75	56	46	37	28	19	17	57	48	41	32	23	17	58	49	44	35	26	17	60	51	48	40	32	25
	150	65	57	44	36	23	17	66	59	49	40	29	18	67	60	51	43	32	22	69	62	56	47	38	30
	200	69	61	48	39	25	17	70	63	52	43	31	20	71	64	55	46	34	24	72	66	59	51	40	31
	275	73	66	51	42	28	22	74	68	56	47	34	22	75	69	58	50	37	26	76	71	62	54	43	34
5	125	55	44	39	29	21	17	58	47	43	34	27	17	59	50	46	37	30	22	62	53	50	41	35	28
	250	64	53	46	36	25	17	66	56	51	41	30	20	68	59	53	44	33	24	70	62	57	48	38	30
	300	66	55	48	38	26	17	68	59	52	43	31	21	70	61	55	46	34	24	73	65	59	50	39	30
	375	69	58	50	41	27	17	71	62	55	45	32	22	73	64	57	48	35	25	75	68	62	53	40	31
6	150	55	43	38	28	19	17	58	48	43	33	25	17	60	50	46	36	28	19	63	55	51	41	35	27
	225	59	49	42	32	21	17	62	53	47	37	27	17	64	56	50	40	31	22	67	60	55	45	37	30
	300	62	52	46	35	22	17	65	57	51	40	29	19	67	59	53	43	32	24	70	64	58	48	39	31
	400	65	56	49	37	24	17	68	60	54	43	30	21	70	63	57	46	34	25	73	67	62	51	40	33
	550	68	60	52	40	26	17	71	64	57	46	32	23	73	67	60	49	36	27	76	71	65	54	42	35
7	250	56	47	38	31	20	18	59	51	44	36	27	25	61	54	48	39	31	29	64	58	55	45	37	37
	350	59	51	42	35	23	19	63	55	49	40	29	26	65	58	52	43	33	31	68	62	59	49	39	38
	550	65	57	48	40	26	21	68	61	54	46	33	28	70	64	58	49	36	32	73	68	64	54	43	39
	625	66	59	49	42	27	21	70	63	56	47	34	28	71	66	59	50	37	33	75	70	66	55	44	40
	800	69	62	52	45	29	22	72	66	59	50	36	29	74	69	63	53	39	33	78	73	69	58	46	41
8	400	59	50	43	36	26	18	62	55	49	41	32	25	65	57	53	44	35	29	68	62	59	49	42	36
	500	61	53	44	38	27	20	65	57	51	43	33	27	67	60	54	46	37	31	70	64	61	51	43	38
	700	64	56	47	41	29	22	68	61	54	46	35	29	70	64	57	49	39	33	74	68	64	54	45	40
	900	67	59	49	43	31	24	70	64	56	48	37	31	72	66	59	51	41	35	76	71	66	56	47	42
	1050	68	61	51	44	32	25	72	65	57	50	38	32	74	68	61	53	42	37	77	72	67	58	48	44
9	450	60	51	46	38	29	25	64	57	52	43	36	32	66	60	56	46	39	37	70	66	63	51	46	44
	700	63	54	48	42	31	27	67	59	55	47	38	34	69	63	59	50	42	39	73	69	65	55	48	46
	900	65	55	50	44	33	28	69	61	56	49	39	36	71	64	60	52	43	40	75	70	67	57	50	47
	1100	66	57	51	46	34	29	70	62	58	51	40	37	72	66	62	54	44	41	76	72	68	59	51	48
	1400	68	58	53	48	35	31	72	64	59	53	42	38	74	67	63	56	45	42	78	73	70	61	52	50
10	550	59	49	46	38	30	30	63	55	52	44	37	33	66	59	56	47	40	34	70	65	62	52	47	37
	950	64	53	49	43	34	33	68	59	56	48	40	36	70	63	59	51	43	38	74	69	66	56	50	40
	1100	65	54	50	44	34	34	69	60	57	49	41	37	72	64	60	52	44	39	76	70	67	57	51	41
	1500	68	57	52	46	36	36	72	63	58	52	42	39	74	66	62	55	46	40	78	72	69	60	52	43
	1800	69	58	53	48	37	37	73	64	60	53	43	40	76	67	63	56	47	41	80	73	70	61	53	44
12	900	59	53	49	42	35	31	63	59	55	48	41	38	66	62	59	51	45	42	70	67	66	56	51	49
	1200	62	55	51	44	37	33	66	61	57	50	43	40	69	64	61	53	47	44	73	70	68	59	53	51
	1600	65	58	53	46	39	35	69	63	59	52	45	42	72	66	63	55	48	46	76	72	70	61	54	53
	1800	66	59	53	47	40	36	70	64	60	53	46	43	73	67	64	56	49	47	77	73	70	62	55	53
	2500	69	61	56	49	42	38	74	67	62	55	48	45	76	70	66	58	51	49	81	76	73	64	57	56
14	1000	63	54	47	42	37	33	68	60	53	48	43	40	71	64	56	51	47	44	77	71	62	57	52	50
	1500	65	55	50	45	40	36	70	62	56	50	46	42	73	66	60	54	49	46	79	73	66	59	55	52
	2100	66	57	53	47	42	37	72	64	59	52	48	44	75	68	62	56	51	48	81	75	68	61	57	54
	2500	67	58	54	48	43	38	73	64	60	53	49	45	76	68	64	57	52	49	82	75	70	62	58	55
	3500	69	59	57	50	45	40	75	66	63	55	51	47	78	70	67	59	54	51	83	77	73	64	60	57
16	1500	61	53	49	45	41	34	66	60	55	51	47	42	70	64	58	54	51	46	75	71	63	60	57	53
	2000	63	55	52	47	43	36	69	62	57	53	49	44	72	66	61	56	52	48	78	73	66	61	59	55
	2500	65	57	54	48	44	38	70	63	60	54	50	45	74	67	63	57	54	50	79	74	68	63	60	57
	2800	65	57	55	49	45	39	71	64	61	55	51	46	75	68	64	58	54	50	80	75	69	63	61	58
	3500	67	59	57	50	46	40	73	66	63	56	52	48	76	70	66	59	56	52	82	76	71	65	62	59
	4500	69	60	60	52	47	42	75	67	65	58	54	49	78	71	68	61	57	54	84	78	74	66	63	61
24x16	3000	67	62	57	51	47	42	71	66	62	58	53	48	73	69	66	62	57	52	77	73	71	68	63	59
	4000	70	65	59	52	48	43	74	70	65	59	54	50	76	72	68	63	58	54	80	77	73	70	64	61
	5300	74	68	61	54	50	45	77	73	67	60	56	52	80	75	70	64	60	56	83	80	76	71	66	63
	6000	75	70	62	54	50	46	79	74	68	61	57	52	81	77	71	65	60	56	85	81	77	72	67	63
	7000	77	72	64	55	51	46	81	76	69	62	57	53	83	79	72	66	61	57	87	83	78	73	67	64
	8400	79	74	65	56	52	48	83	78	71	63	58	54	85	81	74	67	62	58	89	85	79	74	68	65

Performance Notes:

1. Test data obtained in accordance with AHRI Standard 880-2017 and ASHRAE Standard 130-2016.
2. Sound power levels include duct end corrections per AHRI Standard 880-2017.
3. All data are application ratings. Application ratings are outside the scope of the AHRI 880-2017 Certification Program.

PERFORMANCE DATA

SDV – Radiated Sound Power Levels

Unit Size	Airflow cfm	Sound Power Levels Lw dB re 10^{-12} Watts																							
		0.5 in.w.g.						1.0 in.w.g.						1.5 in.w.g.						3.0 in.w.g.					
		Octave Band						Octave Band						Octave Band						Octave Band					
		2	3	4	5	6	7	2	3	4	5	6	7	2	3	4	5	6	7	2	3	4	5	6	7
4	75	45	36	26	22	20	20	46	37	29	25	23	23	46	37	31	27	24	25	47	38	34	30	27	28
	150	54	48	35	30	27	25	55	49	39	33	30	28	56	49	41	35	31	30	57	50	44	38	34	34
	200	58	53	40	34	30	27	59	53	43	37	32	30	60	54	45	39	34	32	61	55	48	41	37	36
	275	63	58	44	38	33	29	64	59	47	41	36	33	64	59	49	42	37	35	65	60	53	45	40	38
5	125	45	37	29	22	19	18	47	39	33	25	22	20	49	40	35	27	24	22	51	42	38	30	26	24
	250	55	48	38	31	27	24	58	50	42	34	30	26	59	51	44	36	32	28	61	53	48	39	34	30
	300	58	51	41	33	29	26	60	53	44	37	32	28	61	54	46	38	34	29	64	56	50	42	37	31
	375	61	54	44	36	32	28	63	56	47	40	35	30	65	57	49	41	36	31	67	59	53	45	39	33
6	150	47	39	29	26	23	21	49	42	33	30	28	26	51	44	36	32	31	29	53	47	41	37	35	35
	225	51	45	34	30	26	23	54	47	39	34	31	28	55	49	41	37	34	31	58	52	46	41	38	36
	300	55	48	38	33	29	24	57	51	42	37	33	29	59	53	45	40	36	32	61	56	50	44	40	37
	400	58	52	42	36	31	25	61	55	46	40	35	30	62	57	49	43	38	33	65	60	54	47	42	38
	550	62	56	46	40	33	26	64	59	50	44	37	31	66	61	53	46	40	34	68	64	58	51	45	40
7	250	48	38	32	24	20	18	51	42	36	27	24	21	52	44	38	29	25	24	55	48	43	33	29	27
	350	52	42	35	27	23	20	54	46	40	31	26	24	56	48	42	33	28	26	58	52	46	36	31	30
	550	57	47	41	32	27	23	59	51	45	36	30	27	61	54	47	38	32	29	63	58	52	41	35	33
	625	58	49	42	34	28	24	60	53	46	37	31	28	62	55	49	39	33	30	64	59	53	42	36	34
	800	61	52	45	36	30	26	63	56	49	40	33	29	65	59	52	42	35	32	67	63	56	45	38	35
8	400	49	42	32	28	24	20	52	46	37	31	27	23	54	48	40	33	29	25	56	53	44	36	32	29
	500	52	44	35	31	26	21	55	49	39	34	29	24	57	51	42	36	30	26	59	56	46	39	34	30
	700	57	49	39	34	28	23	59	53	43	38	31	26	61	55	46	39	33	28	64	60	50	43	36	32
	900	60	52	41	37	30	24	63	56	46	40	33	28	64	59	49	42	35	30	67	63	53	45	38	33
	1050	62	54	43	39	32	25	65	58	48	42	35	28	66	60	50	44	36	30	69	65	55	47	40	34
9	450	48	41	35	28	25	23	52	46	39	31	28	28	54	49	42	33	30	30	58	54	46	36	34	35
	700	52	44	39	33	29	24	56	49	44	36	32	29	58	52	46	38	34	32	62	57	51	41	38	36
	900	55	46	42	35	31	25	58	51	46	39	34	30	60	54	49	41	36	32	64	59	54	44	40	37
	1100	56	48	44	38	33	26	60	53	48	41	36	30	62	56	51	43	38	33	66	61	56	46	41	37
	1400	58	50	46	40	35	26	62	55	51	44	38	31	64	58	54	46	40	33	68	63	58	49	43	38
10	550	49	41	34	26	21	22	52	46	38	30	24	25	54	49	41	32	25	27	57	54	45	35	28	31
	950	54	46	39	32	26	24	58	51	43	36	29	28	59	54	46	38	31	30	63	59	50	41	33	34
	1100	56	48	41	33	28	25	59	52	45	37	30	29	61	55	47	39	32	31	64	60	51	43	35	35
	1500	59	51	43	37	30	27	62	55	48	40	33	30	64	58	50	43	35	33	67	63	54	46	38	36
	1800	61	52	45	39	32	28	64	57	49	42	35	31	66	60	52	45	37	33	69	64	56	48	39	37
12	900	50	41	39	32	24	24	54	47	44	37	29	28	56	51	47	39	31	30	60	57	52	44	35	33
	1200	53	44	42	35	27	27	57	50	47	39	32	31	59	53	49	42	34	33	62	59	55	46	38	36
	1600	56	46	44	37	31	30	59	52	49	42	35	33	61	55	52	44	37	35	65	61	57	49	42	39
	1800	57	47	46	38	32	31	60	53	51	43	36	35	63	56	54	46	39	37	66	62	59	50	43	40
	2500	60	49	49	41	36	34	64	55	54	46	40	38	66	59	57	48	42	40	69	65	62	53	47	43
14	1000	48	41	34	28	23	23	52	47	39	32	27	27	55	51	42	34	29	29	60	57	46	38	33	32
	1500	52	45	39	32	28	27	56	51	44	36	31	30	59	54	46	38	34	32	63	60	51	42	37	36
	2100	55	48	43	35	31	30	59	54	48	39	35	34	62	57	50	41	37	35	66	63	55	45	41	39
	2500	56	50	45	37	33	32	61	56	50	41	37	35	63	59	52	43	39	37	68	65	57	47	43	40
	3500	60	53	49	40	37	35	64	59	54	44	41	38	67	62	56	47	43	40	71	68	61	50	47	43
16	1500	47	44	38	32	28	25	52	50	43	37	32	28	55	53	46	40	35	30	60	59	52	45	39	34
	2000	51	47	41	35	32	28	56	53	47	40	36	31	59	56	50	43	39	33	64	62	55	48	43	37
	2500	53	49	44	38	36	31	58	55	49	43	40	34	61	58	52	46	42	36	66	64	57	51	46	40
	2800	55	50	45	40	37	32	59	56	50	45	41	35	62	59	53	48	44	37	67	65	59	53	48	41
	3500	57	52	47	43	40	35	62	58	53	48	45	38	65	62	56	51	47	40	70	68	61	56	51	44
	4500	60	55	50	46	44	38	65	61	56	51	48	41	68	64	59	54	51	43	73	70	64	59	55	47
24x16	3000	61	55	50	42	36	28	64	59	54	45	38	30	65	61	56	46	39	31	68	64	59	49	41	33
	4000	65	59	53	45	40	32	68	62	57	48	42	34	69	65	59	50	43	36	72	68	63	53	45	38
	5300	69	62	57	48	44	37	71	66	60	51	46	39	73	68	62	53	47	40	75	72	66	56	49	42
	6000	70	64	58	50	46	39	73	67	62	53	48	41	74	70	64	55	49	42	77	73	68	58	51	44
	7000	72	66	60	52	48	41	75	69	64	55	50	43	76	71	66	57	51	45	79	75	69	60	53	47
	8300	75	68	62	54	51	44	77	72	66	57	53	46	79	74	68	59	54	47	81	77	71	62	56	50

Performance Notes:

1. Test data obtained in accordance with AHRI Standard 880-2017 and ASHRAE Standard 130-2016.
2. Sound power levels include duct end corrections per AHRI Standard 880-2017.
3. AHRI certified data is highlighted in blue. All other data are application ratings.
4. Application ratings are outside the scope of the AHRI 880-2017 Certification Program.

PERFORMANCE DATA

SDV – 1 and 2 Row Hot Water Coil Data

Size 4,5,6 Standard Capacity

Rows	Coil gpm	HD Loss	Airflow Rate (cfm) 125	150	175	200	225	250	300	350	400
1 Row Multi Circuit	0.5	0.14	5.5	6.0	6.4	6.7	7.0	7.3	7.8	8.2	8.6
	1	0.46	6.3	6.9	7.5	7.9	8.4	8.8	9.5	10.1	10.6
	2	1.61	6.7	7.4	8.1	8.7	9.2	9.7	10.6	11.3	12.0
	3	3.60	6.9	7.7	8.4	9.0	9.6	10.1	11.0	11.8	12.6
	Through the Coil, ΔPs		0.02	0.03	0.03	0.04	0.05	0.06	0.08	0.10	0.13
2 Row Multi Circuit	1	0.14	10.5	11.7	12.8	13.7	14.6	15.4	16.7	17.9	18.9
	2	0.47	11.2	12.6	13.9	15.1	16.2	17.2	19.0	20.6	21.9
	4	1.64	11.6	13.1	14.5	15.8	17.0	18.2	20.2	21.9	23.5
	6	3.43	11.7	13.3	14.8	16.1	17.4	18.6	20.7	22.6	24.3
	Through the Coil, ΔPs		0.04	0.06	0.07	0.09	0.11	0.13	0.18	0.23	0.29

Size 4,5,6 High Capacity

Rows	Coil gpm	HD Loss	Airflow Rate (cfm) 125	150	175	200	225	250	300	350	400
1 Row Multi Circuit	0.5	0.15	6.2	6.7	7.1	7.5	7.8	8.1	8.6	9.0	9.4
	1	0.50	7.2	7.9	8.5	9.0	9.5	9.9	10.7	11.4	11.9
	2	1.73	7.7	8.6	9.3	10.0	10.6	11.1	12.1	12.9	13.7
	3	3.60	8.0	8.9	9.7	10.4	11.0	11.6	12.7	13.7	14.5
	Through the Coil, ΔPs		0.02	0.03	0.04	0.05	0.06	0.08	0.10	0.13	0.17
2 Row Multi Circuit	1	0.14	11.5	12.9	14.1	15.1	16.1	16.9	18.5	19.7	20.8
	2	0.47	12.4	14.0	15.5	16.8	18.1	19.2	21.2	23.0	24.5
	4	1.64	12.8	14.6	16.2	17.7	19.0	20.3	22.6	24.7	26.5
	6	3.43	13.0	14.8	16.5	18.0	19.5	20.8	23.3	25.4	27.4
	Through the Coil, ΔPs		0.06	0.08	0.10	0.12	0.15	0.17	0.24	0.30	0.38

Size 7,8 Standard Capacity

Rows	Coil gpm	HD Loss	Airflow Rate (cfm) 200	250	300	350	400	500	600	700	800
1 Row Multi Circuit	0.5	0.20	7.2	7.9	8.4	8.8	9.2	9.8	10.3	10.7	11.0
	1	0.68	8.7	9.6	10.4	11.1	11.7	12.7	13.5	14.2	14.8
	2	2.34	9.6	10.8	11.8	12.7	13.5	14.8	15.9	16.9	17.7
	3	4.87	10.0	11.3	12.4	13.4	14.2	15.7	17.0	18.1	19.1
	Through the Coil, ΔPs		0.03	0.04	0.05	0.06	0.08	0.11	0.15	0.20	0.25
2 Row Multi Circuit	1	0.16	14.7	16.5	18.0	19.3	20.5	22.3	23.8	25.0	26.0
	2	0.56	16.3	18.7	20.7	22.5	24.1	26.8	29.1	31.0	32.7
	4	1.97	17.2	19.8	22.2	24.3	26.2	29.5	32.2	34.7	36.8
	6	4.11	17.5	20.3	22.8	25.1	27.1	30.6	33.6	36.3	38.6
	Through the Coil, ΔPs		0.06	0.08	0.11	0.15	0.18	0.26	0.35	0.45	0.57

Size 7,8 High Capacity

Rows	Coil gpm	HD Loss	Airflow Rate (cfm) 200	250	300	350	400	500	600	700	800
1 Row Multi Circuit	0.5	0.20	8.0	8.7	9.2	9.7	10.1	10.7	11.1	11.5	11.8
	1	0.68	9.8	10.9	11.7	12.5	13.1	14.2	15.0	15.7	16.3
	2	2.34	11.0	12.3	13.5	14.5	15.3	16.8	18.0	19.1	20.0
	3	4.87	11.5	13.0	14.2	15.4	16.4	18.0	19.4	20.7	21.7
	Through the Coil, ΔPs		0.03	0.05	0.06	0.08	0.10	0.15	0.20	0.26	0.32
2 Row Multi Circuit	1	0.16	16.1	18.1	19.8	21.2	22.4	24.3	25.8	27.1	28.2
	2	0.56	18.1	20.7	23.0	25.0	26.8	29.8	32.2	34.3	36.1
	4	1.97	19.1	22.1	24.8	27.2	29.3	33.0	36.1	38.8	41.2
	6	4.11	19.5	22.7	25.5	28.1	30.4	34.4	37.9	40.9	43.5
	Through the Coil, ΔPs		0.08	0.11	0.15	0.19	0.23	0.34	0.46	0.59	0.73

Performance notes at end of section.

PERFORMANCE DATA

SDV – 1 and 2 Row Hot Water Coil Data

Size 9,10 Standard Capacity

Rows	Coil gpm	HD Loss	Airflow Rate (cfm) 300	400	500	600	700	800	900	1000	1100
1 Row Multi Circuit	1	0.12	11.9	13.4	14.6	15.6	16.4	17.0	17.7	18.2	18.7
	2	0.42	13.8	15.9	17.6	19.0	20.2	21.2	21.2	23.0	23.8
	4	1.46	14.9	17.3	19.4	21.1	22.6	24.0	25.2	26.2	27.2
	6	3.06	15.3	17.9	20.2	22.0	23.7	25.2	26.5	27.7	28.8
	Through the Coil, ΔPs		0.03	0.04	0.06	0.09	0.11	0.14	0.17	0.20	0.23
2 Row Multi Circuit	1	0.22	19.8	22.5	24.6	26.3	27.6	28.8	29.7	30.6	31.3
	2	0.77	23.1	27.2	30.4	33.1	35.4	37.3	39.1	40.6	42.0
	4	2.67	25.0	29.9	34.0	37.5	40.5	43.1	45.5	47.7	49.7
	6	5.57	28.8	31.0	35.5	39.3	42.7	45.7	48.4	50.9	53.1
	Through the Coil, ΔPs		0.06	0.10	0.14	0.19	0.25	0.31	0.37	0.45	0.52

Size 9,10 High Capacity

Rows	Coil gpm	HD Loss	Airflow Rate (cfm) 300	400	500	600	700	800	900	1000	1100
1 Row Multi Circuit	0.5	0.29	10.1	10.9	11.6	12.1	12.5	12.9	13.1	13.4	13.6
	1	0.99	13.2	14.8	16.0	17.0	17.8	18.5	19.1	19.6	20.0
	2	3.43	15.5	17.8	19.6	21.1	22.3	23.4	24.4	25.2	26.0
	3	7.12	16.5	19.1	21.3	23.1	24.6	25.9	27.1	28.1	29.1
	Through the Coil, ΔPs		0.04	0.06	0.08	0.11	0.14	0.18	0.21	0.25	0.30
2 Row Multi Circuit	1	0.22	21.5	24.4	26.6	28.3	29.7	30.9	31.8	32.7	33.4
	2	0.77	25.5	29.9	33.5	36.4	38.9	41.0	42.8	44.4	45.9
	4	2.67	27.7	33.2	37.8	41.7	45.1	48.1	50.7	53.1	55.2
	6	5.57	28.6	34.6	39.6	44.0	47.8	51.2	54.2	57.0	59.5
	Through the Coil, ΔPs		0.08	0.13	0.19	0.25	0.32	0.40	0.49	0.58	0.68

Size 12 Standard Capacity

Rows	Coil gpm	HD Loss	Airflow Rate (cfm) 400	500	600	700	800	1000	1200	1400	1600
1 Row Multi Circuit	1	0.15	14.7	16.0	17.1	18.0	18.7	19.9	20.9	21.7	22.3
	2	0.50	17.7	19.7	21.3	22.8	24.0	26.0	27.7	29.1	30.3
	4	1.77	19.7	22.1	24.2	26.1	27.7	30.4	32.7	34.7	36.5
	6	3.69	20.5	23.1	25.5	27.5	29.3	32.4	35.1	37.4	39.4
	Through the Coil, ΔPs		0.03	0.04	0.05	0.07	0.08	0.12	0.16	0.21	0.26
2 Row Multi Circuit	1	0.27	24.1	26.4	28.2	29.7	30.9	32.8	34.2	35.4	36.3
	2	0.94	29.6	33.3	36.3	38.9	41.2	44.9	47.8	50.2	52.3
	4	3.28	32.9	37.7	41.8	45.4	48.6	54.0	48.5	62.3	65.6
	6	6.83	34.3	39.5	44.1	48.2	51.8	58.0	53.3	67.9	71.9
	Through the Coil, ΔPs		0.06	0.09	0.12	0.15	0.19	0.27	0.36	0.47	0.58

Size 12 High Capacity

Rows	Coil gpm	HD Loss	Airflow Rate (cfm) 400	500	600	700	800	1000	1200	1400	1600
1 Row Multi Circuit	0.5	0.37	11.6	12.3	12.8	13.3	13.6	14.1	15.5	14.9	15.1
	1	1.26	16.1	17.4	18.5	19.4	20.2	21.4	22.3	23.1	23.7
	2	4.37	19.8	21.9	23.6	25.1	26.4	28.5	30.2	31.6	32.8
	3	9.08	21.5	24.0	26.1	28.0	29.6	32.2	34.4	36.2	37.8
	Through the Coil, ΔPs		0.03	0.05	0.07	0.09	0.11	0.15	0.21	0.27	0.33
2 Row Multi Circuit	1	0.27	26.0	28.4	30.2	31.7	32.9	34.8	36.2	37.3	38.2
	2	0.94	32.4	36.4	39.7	42.5	44.9	48.8	51.8	54.3	56.4
	4	3.28	36.3	41.6	46.2	50.2	53.8	59.7	64.6	68.7	72.2
	6	6.83	37.9	43.8	49.0	53.6	57.7	64.7	70.5	75.6	79.9
	Through the Coil, ΔPs		0.08	0.11	0.15	0.19	0.24	0.35	0.47	0.61	0.75

Performance notes at end of section.

PERFORMANCE DATA

SDV – 1 and 2 Row Hot Water Coil Data

Size 14 Standard Capacity

Rows	Coil gpm	HD Loss	Airflow Rate (cfm) 600	800	1000	1200	1400	1600	1800	2000	2200
1 Row Multi Circuit	1	0.18	18.9	20.7	22.0	23.0	23.9	24.6	25.2	25.7	26.1
	2	0.62	24.3	27.4	29.8	31.7	33.4	34.7	35.9	37.0	37.9
	4	2.16	28.2	32.5	36.0	38.8	41.3	43.4	45.3	47.0	48.5
	6	4.52	30.0	34.8	38.8	42.2	45.1	47.6	49.9	52.0	53.9
	Through the Coil, ΔPs		0.03	0.05	0.07	0.09	0.12	0.14	0.17	0.21	0.24
2 Row Multi Circuit	1.5	0.25	36.5	40.9	44.2	46.6	48.6	50.3	51.7	52.9	53.9
	3	0.87	44.8	52.0	57.8	62.4	66.2	69.5	72.4	74.9	77.2
	6	3.04	49.9	59.3	67.2	73.7	79.3	84.3	88.7	92.7	96.3
	9	6.33	51.9	62.3	71.2	78.6	85.2	91.0	96.2	101.0	105.3
	Through the Coil, ΔPs		0.07	0.10	0.15	0.20	0.26	0.32	0.39	0.47	0.55

Size 14 High Capacity

Rows	Coil gpm	HD Loss	Airflow Rate (cfm) 600	800	1000	1200	1400	1600	1800	2000	2200
1 Row Multi Circuit	0.5	0.46	13.7	14.4	15.0	15.4	15.7	15.9	16.1	16.3	16.5
	1	1.59	20.3	22.1	23.4	24.4	25.2	25.9	26.4	26.9	27.3
	2	5.50	26.8	30.0	32.4	34.4	36.0	37.4	38.6	39.6	40.5
	3	11.43	30.1	34.2	37.4	40.1	42.2	44.1	45.8	47.2	48.5
	Through the Coil, ΔPs		0.04	0.06	0.09	0.12	0.15	0.18	0.22	0.27	0.31
2 Row Multi Circuit	1	0.34	32.3	35.1	37.1	38.5	39.6	40.5	41.3	41.9	42.4
	2	1.17	43.5	49.4	53.8	57.2	59.9	62.2	64.1	65.8	67.2
	4	4.07	51.6	60.5	67.7	73.6	78.5	82.8	86.4	89.6	92.5
	6	8.48	54.9	65.4	74.1	81.4	87.6	93.0	97.8	102.0	105.9
	Through the Coil, ΔPs		0.08	0.13	0.19	0.26	0.34	0.42	0.51	0.60	0.71

Size 16 Standard Capacity

Rows	Coil gpm	HD Loss	Airflow Rate (cfm) 800	1000	1200	1400	1600	1800	2000	2200	2400	2600	2800
1 Row Multi Circuit	1	0.19	21.6	23.0	24.1	24.9	25.6	26.2	26.7	27.2	27.6	27.9	28.3
	2	0.66	29.1	31.7	33.8	35.5	37.0	38.2	39.3	40.3	41.2	42.0	42.7
	4	2.31	35.1	38.9	42.1	44.7	47.1	49.2	51.0	52.7	54.2	55.6	56.9
	6	4.83	37.8	42.2	46.0	49.2	52.1	54.6	56.9	59.0	60.9	62.7	64.4
	Through the Coil, ΔPs		0.03	0.05	0.06	0.08	0.10	0.12	0.15	0.17	0.20	0.23	0.26
2 Row Multi Circuit	1.5	0.27	42.5	45.9	48.5	50.5	52.2	53.6	54.8	55.9	56.8	57.6	58.3
	3	0.93	54.7	60.9	65.9	70.0	73.5	76.6	79.2	81.6	83.7	85.6	87.3
	6	3.23	63.0	71.5	78.8	85.0	90.5	95.3	99.7	103.6	107.2	110.5	113.5
	9	6.74	66.3	76.0	84.5	91.7	98.2	104.0	109.3	114.1	118.6	122.7	126.5
	Through the Coil, ΔPs		0.07	0.11	0.14	0.18	0.23	0.28	0.33	0.38	0.44	0.51	0.57

Size 16 High Capacity

Rows	Coil gpm	HD Loss	Airflow Rate (cfm) 800	1000	1200	1400	1600	1800	2000	2200	2400	2600	2800
1 Row Multi Circuit	1	0.19	23.2	24.6	25.6	26.4	27.1	27.7	28.2	28.6	29.0	29.3	29.6
	2	0.66	32.1	34.8	36.9	38.7	40.2	41.5	42.6	43.5	44.4	45.2	45.9
	4	2.31	39.5	43.6	47.0	50.0	52.5	54.6	56.6	58.3	59.9	61.3	62.6
	6	4.83	42.9	47.9	52.0	55.7	58.8	61.5	64.0	66.2	68.2	70.1	71.8
	Through the Coil, ΔPs		0.04	0.06	0.08	0.11	0.13	0.16	0.19	0.22	0.26	0.29	0.33
2 Row Multi Circuit	1.5	0.27	45.4	48.8	51.4	53.4	55.0	56.4	57.6	58.5	59.4	60.2	60.8
	3	0.93	59.5	66.1	71.3	75.8	79.4	82.5	85.2	87.6	89.7	91.6	93.3
	6	3.23	69.2	78.6	86.6	93.6	99.5	104.7	109.4	113.6	117.4	120.9	124.1
	9	6.74	73.1	84.0	93.4	101.7	108.8	115.3	121.1	126.3	131.1	135.6	139.7
	Through the Coil, ΔPs		0.10	0.14	0.18	0.24	0.30	0.36	0.43	0.50	0.57	0.65	0.74

Performance notes at end of section.

PERFORMANCE DATA

SDV – 1 and 2 Row Hot Water Coil Data

Size 24x16 Standard Capacity

Rows	Coil gpm	HD Loss	Airflow Rate (cfm)										
			1200	1500	2000	2500	3000	3500	4000	4500	5000	5500	6000
1 Row Multi Circuit	1	0.24	26.7	27.9	29.4	30.4	31.2	31.7	32.2	32.6	33.0	33.2	33.5
	2	0.81	39.3	42.2	45.6	48.1	50.0	51.6	52.8	53.9	54.8	55.6	56.4
	4	2.82	51.3	56.2	62.6	67.4	71.2	74.4	77.1	79.4	81.4	83.2	84.8
	6	5.89	57.3	63.6	71.8	78.2	83.4	87.8	91.5	94.8	97.7	100.3	102.6
	Through the Coil, ΔPs		0.03	0.05	0.08	0.11	0.15	0.19	0.24	0.29	0.35	0.41	0.47
2 Row Multi Circuit	1.5	0.33	53.2	56.3	59.8	62.1	63.8	65.1	66.1	67.0	67.7	68.3	68.8
	3	1.13	75.4	82.3	90.9	96.9	101.5	105.2	108.1	110.6	112.7	114.6	116.2
	6	3.92	93.1	104.6	119.8	131.3	140.5	148.1	154.6	160.1	164.9	169.1	172.9
	9	8.16	100.8	114.8	133.8	148.7	161.0	171.4	180.3	188.0	194.9	201.0	206.5
	Through the Coil, ΔPs		0.07	0.11	0.17	0.25	0.33	0.43	0.53	0.65	0.77	0.90	1.04

Size 24x16 High Capacity

Rows	Coil gpm	HD Loss	Airflow Rate (cfm)										
			1200	1500	2000	2500	3000	3500	4000	4500	5000	5500	6000
1 Row Multi Circuit	1	0.24	28.0	29.2	30.6	31.6	32.3	32.8	33.2	33.6	33.9	34.1	34.4
	2	0.81	42.4	45.2	48.6	51.1	52.9	54.4	55.6	56.6	57.4	58.2	58.8
	4	2.82	56.7	61.8	68.4	73.4	77.3	80.4	83.1	85.3	87.3	89.0	90.6
	6	5.89	64.1	70.8	79.6	86.4	91.8	96.3	100.1	103.4	106.3	108.9	111.2
	Through the Coil, ΔPs		0.04	0.06	0.10	0.14	0.19	0.25	0.31	0.38	0.45	0.53	0.61
2 Row Multi Circuit	1.5	0.33	55.7	58.7	62.0	64.2	65.8	67.0	67.9	68.7	69.3	69.8	70.3
	3	1.13	80.6	57.7	96.4	102.4	107.0	110.5	113.3	115.7	117.7	119.4	120.9
	6	3.92	100.9	113.4	129.6	141.8	151.4	159.2	165.7	171.3	176.1	180.3	184.0
	9	8.16	109.9	125.3	146.0	162.3	175.4	186.4	195.7	203.8	210.9	217.1	222.7
	Through the Coil, ΔPs		0.10	0.14	0.22	0.32	0.43	0.55	0.69	0.84	1.00	1.17	1.35

Performance Notes:

1. Tabulated values are in MBH (thousands of Btu per hour).
2. Minimum air and water flow values are based on ASHRAE recommendations for coil selections. For selections below these tabulated air or water values, please consult your local Price representative.
3. Do not select coils for a leaving air temperature above 120 °F.
4. HD (Head) loss is in feet of water.
5. Ps, is the pressure drop in in. of water across the coil.
6. Air temperature rise = ATR, ATR (°F) = 927 x MBH/cfm.
7. Water temperature drop = WTD, WTD (°F) = 2.04 x MBH/gpm.
8. Values in tables are listed for 0 ft of altitude and no glycol in the system.
9. For information outside the ranges used in the table, consult the current Price software or your Price representative for accurate coil information.
10. Heating coils used in this unit have performance rated and certified in accordance with the current edition of AHRI Standard 410-2001.
11. Connections: Standard Terminal Sizes 4, 5, 6, 7, 8 and high capacity size 9-14 – $^{1}/_{2}$ in. OD male solder All others – $^{7}/_{8}$ in. OD male solder.

PERFORMANCE DATA

SDV Electric Coil Max kW - Staged Control

Staged Heating							
Size	1 Phase					3 Phase	
	120	208	240	277	480	208	480
4	5.7	5.7	5.7	5.7	5.7	5.7	5.7
5	5.7	6.9	6.7	6.5	6.7	6.9	6.9
6	5.7	6.9	6.7	6.5	6.7	6.9	6.9
7	5.7	9.8	9.5	9.2	9.5	9.8	9.8
8	5.7	9.8	9.5	9.2	9.5	9.8	9.8
9	5.7	9.9	11.5	13.2	22.7	16.5	16
10	5.7	9.9	11.5	13.2	22.7	16.5	16
12	5.7	9.9	11.5	13.2	23	17.2	26.9
14	5.7	9.9	11.5	13.2	23	17.2	32
16	5.7	9.9	11.5	13.2	23	17.2	39.9
24x16	5.7	9.9	11.5	13.2	23	17.2	39.9

SDV Electric Coil Max kW - SCR Control

SCR Heating							
Size	1 Phase					3 Phase	
	120	208	240	277	480	208	480
4	5.4	5.7	5.7	5.7	5.7	5.7	5.7
5	5.4	6.9	6.7	6.5	6.7	6.9	6.7
6	5.4	6.9	6.7	6.5	6.7	6.9	6.7
7	5.4	9.3	9.5	9.2	9.5	9.8	9.5
8	5.4	9.3	9.5	9.2	9.5	9.8	9.5
9	5.4	9.3	10.8	12.4	16	16.2	16
10	5.4	9.3	10.8	12.4	16	16.2	16
12	5.4	9.3	10.8	12.4	21.5	16.2	26.9
14	5.4	9.3	10.8	12.4	21.5	16.2	32
16	5.4	9.3	10.8	12.4	21.5	16.2	37.4
24x16	3.5	9.3	10.8	12.4	21.5	16.2	37.4

Notes:

1. ETL certified assemblies.
2. Minimum kW:
   Staged Control Single Phase = 0.5 kW per stage.
   Staged Control Three Phase = 1.5 kW.
   SCR control, Single phase = 0.5 kW
   SCR control, Three phase = 1.5 Kw
3. The recommended limit of 48 Amps may not be exceeded. This requires supplemental fusing to meet NEC code requirements. Contact your local Price representative for further details
4. Maximum kW limitations is the lesser of
   a. coil selection chart
   b. minimum air flow requirements of 70 cfm/kW.
5. In some cases, maximum capacity (kW) may be lower than the above values depending on the number of stages selected.
   For most accurate maximum capacities please view our AIO software: **https://www.priceindustries.com/software/all-in-one/**

PERFORMANCE DATA

SDV with Low Profile Construction (SDVLP) – Recommended Air Volume Ranges

Digital Controls

Unit Size	cfm Min.*	cfm Max.
4	45	225
5	60	350
6	65	450
7	95	650
8	125	800
9	160	1050
10	210	1350
12	300	2100
14	431	3000
16	575	4000

Notes:

1. Factory calibrated controls must be selected within the above flow range limits. A minimum value of 0 is also available. When an auxiliary flow setting is specified, the value must be greater than the minimum setting and within the range limits.
2. On controls mounted by Price but supplied by others, the air volume ranges are guidelines only.
3. Minimum airflow limit for digital controls is based on min 0.02 in.w.g. differential pressure signal from airflow sensor. Maximum airflow limit is based on max 1.5 in.w.g. differential pressure signal from airflow sensor.
4. Selection of airflow limits outside the listed values is not recommended. Stability and accuracy may not be acceptable at lower than recommended airflow limits. The actual performance will vary depending on the terminal unit controls supplied.

PERFORMANCE DATA

SDV with Low Profile Construction (SDVLP)

Unit Size	Airflow	Basic Unit	Discharge NC Basic Unit ΔPs Across Unit			Discharge NC c/w 36 in. Attenuator ΔPs Across Unit			Radiated NC Basic Unit ΔPs Across Unit		
	cfm	in.w.g.	0.5 in.w.g.	1.5 in.w.g.	3.0 in.w.g.	0.5 in.w.g.	1.5 in.w.g.	3.0 in.w.g.	0.5 in.w.g.	1.5 in.w.g.	3.0 in.w.g.
4	75	0.01	--	--	--	--	--	--	--	--	--
	125	0.01	--	23	24	21	23	--	--	--	--
	150	0.01	23	26	28	24	26	--	--	--	--
	225	0.01	31	34	36	31	33	--	26	22	26
5	125	0.01	--	--	20	--	--	--	--	--	--
	200	0.01	--	25	28	21	24	--	24	21	24
	250	0.01	23	28	32	25	28	21	28	25	28
	350	0.01	25	30	34	26	29	27	34	31	34
6	150	0.02	--	--	22	--	--	--	--	--	--
	225	0.05	--	22	27	--	24	--	21	--	21
	300	0.08	--	23	29	--	24	--	24	20	24
	400	0.14	--	27	33	23	27	--	28	24	28
	450	0.18	--	29	35	25	29	--	29	25	29
7	250	0.02	--	20	27	--	--	--	--	--	--
	350	0.03	--	23	30	--	21	--	23	--	23
	450	0.05	--	26	33	21	25	--	26	22	26
	550	0.07	--	29	35	24	28	--	28	24	28
	650	0.10	21	31	38	26	30	22	29	27	29
8	400	0.01	--	21	29	--	21	--	25	21	25
	500	0.01	--	24	31	--	24	--	28	24	28
	600	0.01	--	26	33	22	26	--	30	26	30
	700	0.01	--	28	35	24	28	21	32	28	32
	800	0.01	--	28	35	23	28	22	33	29	33
9	450	0.07	--	22	30	22	28	--	32	26	32
	650	0.13	--	26	33	24	29	--	35	29	35
	900	0.22	--	27	35	24	29	22	37	31	37
	1100	0.30	--	29	37	25	30	24	39	33	39
10	550	0.06	--	27	35	22	29	--	32	26	32
	750	0.11	--	28	36	24	30	--	34	28	34
	1000	0.17	--	30	38	26	32	21	37	31	37
	1300	0.26	--	32	40	28	35	24	39	33	39
	1350	0.28	20	33	40	28	35	25	40	34	40
12	900	0.07	--	21	28	22	29	--	33	27	33
	1200	0.12	--	24	31	24	31	--	36	29	36
	1600	0.19	--	27	34	26	33	22	38	32	38
	1800	0.23	--	28	35	27	34	23	40	33	40
	2100	0.29	--	30	37	29	35	24	41	35	41
14	1000	0.05	--	--	26	--	22	--	34	28	34
	1500	0.10	--	24	31	20	27	22	38	32	38
	2100	0.17	--	28	35	24	31	25	41	35	41
	2300	0.20	--	29	36	25	32	26	41	35	41
	3000	0.31	21	32	39	28	35	29	44	38	44
16	1500	0.04	--	24	30	21	28	22	36	30	36
	2000	0.07	--	27	33	24	31	25	39	34	39
	2500	0.1	--	29	36	27	33	28	42	36	42
	2800	0.12	21	31	37	28	34	31	43	37	43
	3200	0.15	22	32	38	30	36	33	44	40	44
	4000	0.21	25	35	41	32	38	37	48	44	48

Performance Notes:

1. Test data obtained in accordance with AHRI Standard 880-2017 and ASHRAE Standard 130-2016.
2. Sound power levels include duct end corrections per AHRI Standard 880-2017.
3. All data are application ratings. Application ratings are outside the scope of the AHRI 880-2017 Certification Program.
4. Application ratings are outside the scope of the AHRI 880-2017 Certification Program.
5. ΔPs is the difference in static pressure from inlet to discharge of the unit.
6. ΔPs for terminal units with electric coil is equal to basic unit. Resistance of the coil elements is negligible.
7. NC values are calculated based on typical attenuation values outlined in Appendix E, AHRI Standard 885-2008, "A Procedure for Estimating Occupied Space Sound Levels in the Application of Air Terminals and Air Outlets."
8. Asterisks (*) indicate minimum static pressure of the unit exceeds the minimum operating pressure across the unit.
9. Dashes (--) indicate sound power levels below 20.

Typical Attenuation Values:
Radiated Sound

Total Deduction	Octave Band Mid Frequency, Hz					
	120	250	500	1000	2000	4000
All Sizes	18	19	20	26	31	36

Discharge Sound

Total Deduction	Octave Band Mid Frequency, Hz					
	120	250	500	1000	2000	4000
< 300 cfm	24	28	39	53	59	40
300 – 700 cfm	27	29	40	51	53	39
> 700 cfm	29	30	41	51	52	39

PERFORMANCE DATA

SDV with Low Profile Construction (SDVLP) – Discharge Sound Power Levels, Basic Assembly

Unit Size	Airflow	Sound Power Levels Lw dB re 10^{-12} Watts																							
		0.5 in.w.g.						1.0 in.w.g.						1.5 in.w.g.						3.0 in.w.g.					
		Octave Band						Octave Band						Octave Band						Octave Band					
	cfm	2	3	4	5	6	7	2	3	4	5	6	7	2	3	4	5	6	7	2	3	4	5	6	7
4	75	56	49	41	37	36	29	58	52	46	41	42	36	59	53	48	44	46	40	60	55	53	49	52	48
	125	64	57	47	43	40	32	65	59	52	47	46	40	66	61	54	50	50	44	68	63	59	55	56	52
	150	67	60	49	45	42	34	68	62	54	49	48	41	69	63	56	52	51	46	70	66	61	57	57	53
	225	73	66	54	49	45	37	74	68	58	54	51	44	75	70	61	57	55	49	76	72	65	61	61	56
5	125	57	46	43	38	36	32	60	50	48	43	42	39	62	53	51	46	46	43	64	57	56	51	52	51
	200	64	53	48	43	39	35	66	57	53	48	46	42	68	59	56	51	49	47	70	63	61	56	55	54
	250	66	56	50	45	41	37	69	60	55	50	47	44	71	62	58	53	51	48	73	66	63	58	57	55
	350	71	60	54	49	43	39	74	64	59	54	49	46	75	66	62	57	53	50	78	70	66	61	59	58
6	150	55	47	37	36	34	28	59	52	42	41	41	36	62	55	46	44	44	41	65	60	51	50	51	48
	225	60	52	42	40	37	31	63	57	48	45	44	39	66	60	51	49	47	43	70	65	57	54	54	51
	300	63	56	46	43	39	33	66	61	52	48	46	41	69	64	55	52	49	45	73	69	61	57	56	53
	400	65	60	50	46	41	35	69	65	56	51	48	42	72	68	59	55	51	47	76	73	65	60	58	55
	450	67	61	52	47	42	36	71	66	57	53	49	43	73	69	61	56	52	48	77	75	66	61	59	55
7	250	58	52	42	40	38	34	62	58	49	46	44	41	64	61	53	49	48	45	68	66	60	55	55	52
	350	61	56	46	43	40	36	65	61	53	48	46	43	67	65	57	52	50	47	71	70	64	58	57	54
	450	64	58	49	45	41	37	67	64	56	50	48	45	70	67	60	54	51	49	73	73	66	60	58	56
	550	66	61	51	46	42	39	69	66	58	52	49	46	71	69	62	56	53	50	75	75	69	61	59	57
	650	67	62	53	48	43	40	71	68	60	54	50	47	73	71	64	57	54	51	77	77	70	63	60	58
8	400	60	54	44	42	39	34	64	60	51	48	45	41	67	63	55	51	49	45	71	69	62	57	56	53
	500	62	56	46	44	40	35	66	62	53	50	47	42	69	65	57	53	50	47	73	71	64	59	57	54
	600	64	57	48	46	41	36	68	64	55	51	47	43	70	67	59	55	51	48	74	73	66	61	58	55
	700	65	59	50	47	42	37	69	65	57	53	48	44	72	69	61	56	52	49	76	75	68	62	59	56
	800	67	60	51	48	42	38	71	66	58	54	49	45	73	70	63	57	53	49	77	76	70	63	59	57
9	450	57	54	52	49	45	40	63	60	58	56	53	49	66	64	61	60	58	54	72	70	67	68	67	63
	650	61	56	55	51	46	41	67	63	61	58	55	50	70	67	64	63	59	55	76	73	69	70	68	64
	900	64	59	58	53	47	42	70	65	63	60	56	51	73	69	66	65	61	56	79	75	72	72	69	65
	1100	66	60	59	54	48	43	72	67	65	62	56	52	75	70	68	66	61	57	81	77	74	73	70	66
10	550	59	58	54	50	46	42	64	64	59	57	54	50	67	68	62	61	59	55	73	75	68	69	67	63
	750	61	60	56	52	47	43	67	66	61	59	55	52	70	70	65	63	60	56	75	77	70	71	68	64
	1000	64	61	58	53	48	45	69	68	64	61	56	53	72	72	67	65	61	58	78	78	72	72	69	66
	1300	66	63	60	55	50	47	71	69	65	62	58	55	75	73	69	67	62	59	80	80	74	74	70	67
	1350	66	63	60	55	50	47	72	70	66	63	58	55	75	73	69	67	62	60	80	80	74	74	70	68
12	900	62	55	54	51	47	42	66	61	59	58	55	50	69	64	63	62	60	54	73	70	68	69	68	62
	1200	64	57	56	53	48	43	68	63	62	60	56	51	71	67	65	64	61	56	75	72	71	71	69	64
	1600	66	60	59	55	49	44	71	66	64	62	57	52	73	69	68	66	62	57	78	75	73	73	70	65
	1800	67	61	60	56	50	45	72	67	65	63	58	53	74	70	68	67	62	58	79	76	74	74	70	66
	2100	68	62	61	57	50	46	73	68	67	64	58	54	75	71	70	68	63	58	80	77	75	75	71	66
14	1000	60	53	54	49	47	41	65	59	59	56	55	49	68	62	62	60	60	54	73	68	68	67	68	62
	1500	63	57	57	52	49	44	69	63	62	59	57	51	72	66	65	63	62	56	77	72	71	70	70	64
	2100	67	60	60	55	50	46	72	66	65	62	58	53	75	69	68	66	63	58	80	75	74	73	71	66
	2300	68	61	60	56	50	46	73	67	66	63	59	54	76	70	69	67	63	58	81	76	74	74	71	66
	3000	70	64	62	58	52	47	75	69	68	65	60	55	78	73	71	69	64	60	83	79	77	76	72	68
16	1500	62	58	55	54	50	44	67	63	61	60	58	52	70	66	65	64	62	56	74	71	71	71	70	64
	2000	65	60	57	56	51	46	70	66	64	62	59	54	73	69	67	66	63	58	77	74	74	73	71	66
	2500	67	62	59	57	52	47	72	68	66	64	60	55	75	71	69	68	64	59	80	76	76	75	72	67
	2800	69	63	60	58	53	48	73	69	67	65	60	55	76	72	70	69	65	60	81	77	77	75	73	67
	3200	70	65	62	59	53	49	75	70	68	66	61	56	77	73	72	70	66	61	82	78	78	76	73	68
	4000	72	67	64	61	54	50	77	72	70	67	62	57	80	75	74	71	67	62	84	81	80	78	74	69

Performance Notes:

1. Test data obtained in accordance with AHRI Standard 880-2017 and ASHRAE Standard 130-2016.
2. Sound power levels include duct end corrections per AHRI Standard 880-2017.
3. Application ratings are outside the scope of the AHRI 880-2017 Certification Program.

PERFORMANCE DATA

SDV with Low Profile Construction (SDVLP) – Discharge Sound Power Levels with 3 ft Attenuator

Unit Size	Airflow	Sound Power Levels Lw dB re 10^{-12} Watts																							
		0.5 in.w.g.						1.0 in.w.g.						1.5 in.w.g.						3.0 in.w.g.					
		Octave Band						Octave Band						Octave Band						Octave Band					
	cfm	2	3	4	5	6	7	2	3	4	5	6	7	2	3	4	5	6	7	2	3	4	5	6	7
4	75	56	46	37	28	--	--	57	48	41	32	23	--	58	49	44	35	26	17	60	51	48	40	32	25
	125	63	54	42	34	21	--	64	56	47	38	27	--	65	57	49	41	30	21	66	59	54	45	36	28
	150	65	57	44	36	23	--	66	59	49	40	29	18	67	60	51	43	32	22	69	62	56	47	38	30
	225	70	63	49	40	26	--	72	65	53	45	32	21	72	66	56	47	35	25	74	68	60	52	41	32
5	125	55	44	39	29	21	--	58	47	43	34	27	18	59	50	46	37	30	22	62	53	50	41	35	28
	200	61	50	44	34	24	--	63	54	48	39	29	20	65	56	51	41	32	23	68	59	55	46	37	29
	250	64	53	46	36	25	--	66	56	51	41	30	20	68	59	53	44	33	24	70	62	57	48	38	30
	350	68	57	50	40	27	--	70	61	54	44	32	22	72	63	57	47	35	25	74	67	61	52	40	31
6	150	55	43	38	28	--	--	58	48	43	33	25	--	60	50	46	36	28	19	63	55	51	41	35	27
	225	59	49	42	32	21	--	62	53	47	37	27	17	64	56	50	40	31	22	67	60	55	45	37	30
	300	62	52	46	35	22	--	65	57	51	40	29	19	67	59	53	43	32	24	70	64	58	48	39	31
	400	65	56	49	37	24	--	68	60	54	43	30	21	70	63	57	46	34	25	73	67	62	51	40	33
	450	66	57	50	39	25	--	69	62	55	44	31	22	71	64	58	47	35	26	74	69	63	52	41	34
7	250	56	47	38	31	20	18	59	51	44	36	27	25	61	54	48	39	31	29	64	58	55	45	37	37
	350	59	51	42	35	23	19	63	55	49	40	29	26	65	58	52	43	33	31	68	62	59	49	39	38
	450	62	54	45	38	25	20	66	59	52	43	31	27	68	61	55	46	35	31	71	66	62	52	41	39
	550	65	57	48	40	26	21	68	61	54	46	33	28	70	64	58	49	36	32	73	68	64	54	43	39
	650	67	59	50	42	28	21	70	64	56	48	34	28	72	66	60	51	38	33	75	70	66	56	44	40
8	400	59	50	43	36	26	18	62	55	49	41	32	25	65	57	53	44	35	29	68	62	59	49	42	36
	500	61	53	44	38	27	20	65	57	51	43	33	27	67	60	54	46	37	31	70	64	61	51	43	38
	600	63	55	46	39	28	21	66	59	52	44	34	28	68	62	56	47	38	32	72	66	62	53	44	39
	700	64	56	47	41	29	22	68	61	54	46	35	29	70	64	57	49	39	33	74	68	64	54	45	40
	800	65	58	48	42	30	23	69	62	55	47	36	30	71	65	58	50	40	34	75	70	65	55	46	41
9	450	60	56	53	44	35	24	64	61	58	51	43	33	66	64	60	54	47	39	70	68	65	61	55	48
	650	61	57	54	45	36	25	65	62	59	51	43	34	67	65	61	55	48	39	71	70	66	62	55	48
	900	63	58	55	46	36	25	66	63	59	52	44	35	68	66	62	56	48	40	72	71	67	62	56	49
	1100	63	59	55	46	36	26	67	64	60	53	44	35	69	67	63	56	48	40	73	71	67	63	56	49
10	550	58	55	51	43	35	22	63	61	56	50	43	31	66	64	59	55	47	36	70	69	65	62	55	45
	750	60	57	53	45	36	25	65	63	59	52	44	33	68	66	62	56	48	39	73	71	67	64	56	48
	1000	62	59	56	47	37	27	67	64	61	54	45	36	70	68	64	58	50	41	75	73	69	66	58	50
	1300	64	61	58	48	38	29	69	66	63	56	46	38	72	69	66	60	51	43	77	75	72	67	59	52
	1350	64	61	58	49	38	30	69	66	63	56	46	39	72	70	66	60	51	44	77	75	72	67	59	53
12	900	60	56	52	45	37	26	65	61	57	51	45	34	68	64	60	55	50	39	73	70	66	62	58	47
	1200	62	57	54	46	38	28	67	63	59	53	46	36	70	66	63	57	51	41	75	72	68	64	59	49
	1600	64	59	56	48	39	30	69	65	62	55	47	38	72	68	65	59	52	43	77	74	70	66	60	51
	1800	65	60	57	49	39	31	70	66	63	56	47	39	73	69	66	60	52	44	78	75	71	66	60	52
	2100	66	61	58	50	40	32	71	67	64	56	48	40	74	70	67	60	53	45	79	76	73	67	61	53
14	1000	57	51	52	44	39	28	62	56	57	51	47	35	65	59	61	55	52	40	69	65	66	61	60	47
	1500	61	55	55	47	40	31	66	60	61	54	48	38	68	63	64	58	53	42	73	69	69	65	61	50
	2100	64	58	58	50	42	33	69	63	63	57	50	40	72	66	67	60	54	45	76	72	72	67	62	52
	2300	65	59	59	51	42	33	70	64	64	57	50	41	73	67	67	61	54	45	77	73	73	68	62	53
	3000	68	61	61	53	43	35	72	67	66	59	51	43	75	70	69	63	55	47	80	75	75	70	63	54
16	1500	60	55	55	48	42	30	64	61	61	55	50	37	66	64	64	59	54	41	71	69	69	65	62	48
	2000	63	58	58	51	43	32	67	63	63	57	51	39	70	67	66	61	55	43	74	72	72	68	63	50
	2500	65	60	59	52	44	33	69	65	65	59	52	40	72	69	68	63	56	44	76	74	74	69	64	51
	2800	66	61	60	53	45	34	71	67	66	60	52	41	73	70	69	64	57	45	77	75	75	70	64	52
	3200	68	62	62	54	45	35	72	68	67	61	53	42	75	71	70	65	57	46	79	76	76	71	65	53
	4000	70	65	63	56	46	36	74	70	69	62	54	43	77	73	72	66	58	48	81	78	78	73	66	55

Performance Notes:

1. Test data obtained in accordance with AHRI Standard 880-2017 and ASHRAE Standard 130-2016.
2. Sound power levels include duct end corrections per AHRI Standard 880-2017.
3. All data are application ratings. Application ratings are outside the scope of the AHRI 880 Certification Program.
4. Dashes (--) indicate sound power levels below 36-29-26-22-19-17 for each octave band; values below these sound power levels are considered below significance per AHRI 880.

PERFORMANCE DATA

SDV with Low Profile Construction (SDVLP) – Radiated Sound Power Levels

Unit Size	Airflow	Sound Power Levels Lw dB re 10^{-12} Watts																							
		0.5 in.w.g.						1.0 in.w.g.						1.5 in.w.g.						3.0 in.w.g.					
		Octave Band						Octave Band						Octave Band						Octave Band					
	cfm	2	3	4	5	6	7	2	3	4	5	6	7	2	3	4	5	6	7	2	3	4	5	6	7
4	75	44	35	28	23	--	--	45	37	32	27	23	21	46	38	34	29	26	23	48	40	37	33	31	28
	125	48	42	35	28	22	19	50	43	38	33	27	23	50	45	40	35	29	26	52	47	44	39	34	30
	150	50	44	37	30	23	19	51	46	41	35	28	24	52	47	43	37	31	26	53	49	46	41	36	31
	225	53	49	42	35	25	21	55	51	46	39	30	26	55	52	48	42	33	28	57	54	51	46	38	33
5	125	50	35	29	22	--	--	52	38	33	26	22	19	53	40	35	29	25	23	55	42	39	33	31	30
	200	56	42	35	27	20	--	58	44	38	31	26	23	59	46	40	34	29	27	61	49	44	38	35	34
	250	59	45	37	30	22	18	61	47	41	34	28	25	62	49	43	36	32	29	64	52	47	41	37	36
	350	64	49	41	33	26	20	66	52	45	37	31	27	67	54	47	40	35	31	69	56	51	44	41	38
6	150	46	37	30	24	20	--	50	41	34	28	26	23	52	43	36	31	30	27	55	47	39	36	36	33
	225	50	42	35	28	24	19	54	46	38	33	30	26	56	48	41	35	33	29	59	52	44	40	39	36
	300	53	45	38	31	26	21	56	49	42	36	32	27	58	51	44	38	36	31	62	55	48	43	42	37
	400	56	48	41	34	28	23	59	52	45	38	34	29	61	54	47	41	38	33	64	58	51	46	44	39
	450	57	50	43	35	29	24	60	54	47	40	35	30	62	56	49	42	39	34	65	60	52	47	45	40
7	250	50	37	31	28	22	--	52	42	37	32	26	20	53	45	40	34	29	23	56	50	46	38	33	29
	350	53	41	34	31	25	18	56	45	40	35	29	24	57	48	43	37	32	27	59	53	49	41	36	32
	450	56	43	36	34	28	21	58	48	42	37	32	26	59	51	46	40	34	29	62	56	51	44	39	34
	550	58	45	38	35	30	23	60	50	44	39	34	28	62	53	47	41	36	31	64	58	53	45	41	36
	650	60	47	40	37	31	24	62	52	46	41	36	29	63	55	49	43	38	32	65	60	55	47	42	37
8	400	54	43	33	26	23	--	57	47	39	32	29	25	59	50	42	35	33	29	62	55	48	40	39	37
	500	56	45	35	28	24	18	59	50	41	34	31	25	61	53	44	37	34	30	64	58	50	42	40	38
	600	57	47	37	30	25	18	61	52	42	35	32	26	63	55	46	38	35	31	66	60	52	44	41	39
	700	59	49	38	31	26	18	62	54	44	36	32	26	64	56	47	40	36	31	67	61	53	45	42	39
	800	60	50	39	32	27	19	63	55	45	38	33	27	65	58	48	41	37	31	69	63	54	46	43	39
9	450	52	49	43	35	25	21	57	53	49	42	33	30	59	56	52	46	38	35	63	61	57	53	46	44
	650	55	51	46	37	27	22	60	56	51	44	35	30	62	59	54	48	40	36	66	64	60	55	48	44
	900	58	54	48	39	28	22	62	59	54	46	37	31	65	61	57	50	41	36	69	66	62	57	49	45
	1100	59	55	50	40	29	23	64	60	55	47	37	32	66	63	58	51	42	37	70	68	64	58	50	46
10	550	52	48	43	35	25	--	57	53	48	43	33	24	59	56	52	47	38	30	63	61	57	54	46	40
	750	55	51	45	37	27	17	59	56	51	45	35	27	62	58	54	49	40	33	66	63	59	56	48	43
	1000	58	53	47	39	29	20	62	58	53	46	37	30	64	61	56	51	42	36	69	66	61	58	50	46
	1300	60	55	49	41	31	23	64	60	55	48	39	33	67	63	58	52	44	38	71	68	63	60	52	48
	1350	61	56	49	41	32	23	65	61	55	48	40	33	67	64	58	53	45	39	71	68	63	60	53	48
12	900	55	48	44	38	28	20	60	54	49	44	35	28	63	57	53	48	40	34	68	63	58	55	47	42
	1200	57	51	46	39	30	22	62	56	52	46	37	30	65	59	55	50	42	35	70	65	61	57	49	44
	1600	59	53	48	41	32	24	64	59	54	48	39	32	67	62	57	52	43	37	72	67	63	59	51	46
	1800	60	54	49	42	32	25	65	60	55	49	40	33	68	63	58	53	44	38	73	68	64	60	51	47
	2100	61	56	50	43	33	26	66	61	56	50	41	34	69	64	59	54	45	39	74	70	65	61	52	48
14	1000	52	47	45	37	28	20	56	52	51	43	35	28	59	55	54	47	39	32	63	60	59	53	45	40
	1500	57	51	48	40	31	24	61	56	54	46	38	32	64	59	57	50	42	37	68	64	63	57	49	44
	2100	61	55	51	43	34	28	65	60	57	49	41	36	68	63	60	53	45	40	72	68	65	59	52	48
	2300	62	56	52	44	35	29	66	61	57	50	42	37	69	64	60	54	46	41	73	69	66	60	52	49
	3000	65	59	54	46	37	32	69	64	59	52	44	39	72	67	63	56	48	44	76	72	68	62	55	52
16	1500	57	53	47	39	32	22	61	58	52	45	37	29	63	61	55	48	40	33	66	65	60	54	46	39
	2000	62	56	49	42	35	26	65	61	55	47	41	33	67	63	58	51	44	36	70	68	63	57	49	43
	2500	65	58	51	44	38	29	68	63	57	50	43	36	70	65	60	53	46	39	73	70	65	59	52	46
	2800	66	59	52	45	39	31	70	64	58	51	45	37	72	67	61	54	48	41	75	71	66	60	53	48
	3200	68	61	54	46	41	32	72	65	59	52	46	39	74	68	62	55	49	43	77	73	67	61	55	49
	4000	71	63	56	48	43	35	75	67	61	54	49	42	77	70	64	57	52	46	80	75	69	63	57	52

Performance Notes:

1. Test data obtained in accordance with AHRI Standard 880-2017 and ASHRAE Standard 130-2016.
2. Sound power levels include duct end corrections per AHRI Standard 880-2017.
3. All data are applications ratings. Application ratings are outside the scope of the AHRI 880 Certification Program.
4. Dashes (--) indicate sound power levels below 36-29-26-22-19-17 for each octave band; values below these sound power levels are considered below significance per AHRI 880.

PERFORMANCE DATA

SDV with Low Profile Construction (SDVLP) – 1 and 2 Row Hot Water Coil Data

Inlet Size 4,5,6

Rows	Coil gpm	HD Loss	Airflow Rate, cfm								
			125	150	175	200	225	250	300	350	400
1 Row Multi Circuit	0.5	0.15	5.5	6.0	6.4	6.7	7.0	7.3	7.8	8.2	8.5
	1	0.50	6.3	6.9	7.4	7.9	8.4	8.8	9.5	10.1	10.6
	2	1.73	6.7	7.4	8.1	8.7	9.2	9.7	10.6	11.3	12.0
	3	3.60	6.9	7.7	8.3	9.0	9.5	10.1	11.0	11.8	12.6
	Through the Coil, ΔPs		0.02	0.03	0.03	0.04	0.05	0.06	0.08	0.10	0.13
2 Row Multi Circuit	1	0.14	10.5	11.7	12.7	13.7	14.6	15.4	16.7	17.9	18.9
	2	0.47	11.2	12.6	13.9	15.1	16.2	17.2	19.0	20.6	21.9
	4	1.64	11.6	13.1	14.5	15.8	17.0	18.2	20.2	21.9	23.5
	6	3.43	11.7	13.3	14.8	16.1	17.4	18.6	20.7	22.5	24.2
	Through the Coil, ΔPs		0.04	0.06	0.07	0.09	0.11	0.13	0.18	0.23	0.29

Inlet Size 7,8

Rows	Coil gpm	HD Loss	Airflow Rate, cfm								
			200	250	300	350	400	500	600	700	800
1 Row Multi Circuit	0.5	0.21	7.23	7.9	8.4	8.8	9.2	9.8	10.3	10.7	11.0
	1	0.73	8.68	9.6	10.4	11.1	11.7	12.7	13.5	14.2	14.8
	2	2.53	9.59	10.8	11.8	12.7	13.5	14.8	15.9	16.9	17.7
	3	5.25	9.97	11.3	12.4	13.4	14.2	15.7	17.0	18.1	19.1
	Through the Coil, ΔPs		0.03	0.04	0.05	0.06	0.08	0.11	0.15	0.20	0.25
2 Row Multi Circuit	1	0.17	14.68	16.5	18.0	19.3	20.5	22.3	23.8	25.0	26.0
	2	0.60	16.33	18.7	20.7	22.5	24.1	26.8	29.1	31.0	32.7
	4	2.10	17.18	19.8	22.2	24.3	26.2	29.5	32.2	34.7	36.8
	6	4.39	17.52	20.3	22.8	25.1	27.1	30.6	33.6	36.3	38.6
	Through the Coil, ΔPs		0.06	0.08	0.11	0.14	0.18	0.26	0.35	0.45	0.56

Inlet Size 9,10

Rows	Coil gpm	HD Loss	Airflow Rate, cfm								
			300	400	500	600	700	800	900	1000	1100
1 Row Multi Circuit	1	0.11	12.14	13.7	14.9	15.9	16.7	17.4	18.0	18.5	19.0
	2	0.37	14.10	16.2	18.0	19.4	20.7	21.8	22.7	23.6	24.4
	4	1.29	15.24	17.8	19.9	21.7	23.2	24.6	25.9	27.0	28.0
	6	2.72	15.72	18.4	20.7	22.7	24.4	25.9	27.3	28.6	29.7
	Through the Coil, ΔPs		0.03	0.04	0.06	0.09	0.11	0.14	0.17	0.20	0.24
2 Row Multi Circuit	1	0.19	20.07	22.9	25.0	26.7	28.0	29.2	30.1	31.0	31.7
	2	0.67	23.52	27.6	30.9	33.7	36.0	38.0	39.8	41.4	42.8
	4	2.33	25.47	30.5	34.7	38.2	41.3	44.1	46.5	48.7	50.8
	6	4.87	26.24	31.6	36.2	40.1	43.6	46.7	49.5	52.1	54.4
	Through the Coil, ΔPs		0.06	0.10	0.15	0.20	0.25	0.31	0.38	0.45	0.53

Inlet Size 12

Rows	Coil gpm	HD Loss	Airflow Rate, cfm							
			400	500	600	700	800	1000	1200	1400
1 Row Multi Circuit	1	0.12	15.3	16.6	17.7	18.7	19.4	20.7	21.7	22.5
	2	0.41	18.6	20.7	22.4	23.9	25.2	27.3	29.0	30.5
	3	1.43	20.7	23.3	25.6	27.5	29.2	32.2	34.6	36.7
	4	3.00	21.6	24.5	27.0	29.2	31.1	34.4	37.3	39.7
	Through the Coil, ΔPs		0.03	0.04	0.06	0.07	0.09	0.13	0.17	0.22
2 Row Multi Circuit	1	0.22	24.8	27.1	29.0	30.5	31.7	33.6	35.1	36.2
	2	0.75	30.6	34.4	37.6	40.3	42.6	46.4	49.5	52.0
	4	2.60	34.1	39.1	43.4	47.2	50.6	56.3	61.0	65.0
	6	5.44	35.5	41.1	45.9	50.2	54.0	60.7	66.3	71.1
	Through the Coil, ΔPs		0.06	0.09	0.12	0.16	0.20	0.28	0.38	0.49

Performance notes at end of section.

PERFORMANCE DATA

SDV with Low Profile Construction (SDVLP) – 1 and 2 Row Hot Water Coil Data

Inlet Size 14

Rows	Coil gpm	HD Loss	Airflow Rate, cfm								
			600	800	1000	1200	1400	1600	1800	2000	2200
1 Row Multi Circuit	2	0.13	24.8	28.0	30.4	32.4	34.0	35.4	36.7	37.7	38.7
	4	0.46	28.9	33.3	36.8	39.8	42.3	44.5	46.4	48.2	49.8
	8	1.61	31.3	36.5	40.8	44.4	47.5	50.3	52.9	55.1	57.2
	12	3.36	32.3	37.9	42.5	46.5	49.9	53.0	55.8	58.4	60.7
	Through the Coil, ΔPs		0.04	0.07	0.09	0.13	0.16	0.20	0.25	0.29	0.34
2 Row Multi Circuit	2	0.19	40.7	46.3	50.5	53.9	56.6	58.9	60.9	62.5	64.0
	4	0.65	47.7	56.0	62.7	68.2	72.9	76.9	80.5	83.6	86.5
	8	2.25	51.6	61.8	70.1	77.3	83.5	89.1	94.0	98.5	102.5
	12	4.71	53.2	64.1	73.3	81.2	88.2	94.5	100.1	105.2	109.9
	Through the Coil, ΔPs		0.09	0.14	0.21	0.28	0.36	0.45	0.55	0.65	0.76

Inlet Size 16

Rows	Coil gpm	HD Loss	Airflow Rate, cfm										
			800	1000	1200	1400	1600	1800	200	2200	2400	2600	2800
1 Row Multi Circuit	2	0.14	30.7	33.4	35.5	37.3	38.8	40.1	41.3	42.3	43.2	44.1	44.8
	4	0.48	37.4	41.4	44.8	47.7	50.2	52.4	54.4	56.2	57.8	59.3	60.7
	8	1.69	41.6	46.7	51.0	54.8	58.1	61.1	63.8	66.3	68.6	70.7	72.6
	12	3.54	43.4	49.0	53.8	58.0	61.7	65.1	68.2	71.1	73.7	76.1	78.4
	Through the Coil, ΔPs		0.05	0.07	0.09	0.12	0.15	0.18	0.21	0.25	0.29	0.33	0.37
2 Row Multi Circuit	2	0.20	49.6	54.2	57.8	60.7	63.1	65.1	66.9	68.4	69.8	71.0	72.0
	4	0.69	61.0	68.6	74.8	80.1	84.6	88.6	92.1	95.2	98.0	100.6	102.9
	8	2.42	68.0	77.8	86.2	93.5	99.9	105.7	111.0	115.7	120.1	124.1	127.8
	12	5.06	70.8	81.6	91.0	99.3	106.7	113.5	119.6	125.2	130.4	135.2	139.7
	Through the Coil, ΔPs		0.10	0.15	0.20	0.26	0.32	0.39	0.47	0.55	0.63	0.72	0.82

Performance Notes:

1. Tabulated values are in MBH (thousands of Btu per hour).
2. Minimum air and water flow values are based on ASHRAE recommendations for coil selections. For selections below these tabulated air or water values, please consult your local Price representative.
3. Do not select coils for a leaving air temperature above 120 °F.
4. HD (Head) loss is in ft of water.
5. ΔPs, is the pressure drop in in. of water across the coil.
6. Values in tables are listed for 0 ft of altitude and no glycol in the system.
7. For information outside the ranges used in the table, consult the current Price software or your Price representative for accurate coil information.
8. Heating coils used in this unit have performance rated and certified in accordance with the current edition of AHRI Standard 410.
9. Connections: 7/8 in. OD male solder.

PERFORMANCE DATA

SDV with Low Profile Construction (SDVLP)
SDVLP Electric Coil Max kW – Staged Control

Size	Stages	1 Phase						3 Phase		
		120	208	240	277	347	480	208	480	600
4	1, 2, 3	5.6	5.7	5.7	5.7	5.7	4.4	5.7	5.7	5.7
5	1, 2, 3	5.6	6.9	6.7	6.5	6.8	4.4	6.9	6.7	7
6	1, 2, 3	5.6	6.9	6.7	6.5	6.8	4.4	6.9	6.7	7
7	1, 2, 3	5.6	9.8	11.3	11	9.7	11.2	9.8	11.3	9.9
8	1, 2, 3	5.6	9.8	11.3	11	9.7	11.2	9.8	11.3	9.9
9	1, 2, 3	5.6	9.8	11.3	13.1	15	15	15	15	15
10	1, 2, 3	5.6	9.8	11.3	13.1	16.4	19	16.5	19.1	16.8
12	1, 2, 3	5.6	9.8	11.3	13.1	16.4	22.7	17.2	26.9	28.3
14	1, 2, 3	4.6	9.8	11.3	13.1	16.4	22.7	17.2	32	33.6
16	1, 2, 3	3.5	9.8	11.3	13.1	16.4	22.7	17.2	39.9	47.7

SDVLP Electric Coil Max kW – SCR Control

Size	Stages	1 Phase						3 Phase		
		120	208	240	277	347	480	208	480	600
4	SCR	5.4	5.7	5.7	5.7	5.7	5.7	5.7	5.7	5.7
5	SCR	5.4	6.9	6.5	6.5	6.8	6.7	6.9	7.1	7
6	SCR	5.4	6.9	6.5	6.5	6.8	6.7	6.9	7.8	7
7	SCR	5.4	9.3	11	11	9.7	11.3	11.4	11.3	11.4
8	SCR	5.4	9.3	11	11	9.7	11.3	11.6	11.3	11.9
9	SCR	5.4	9.3	10.8	12.4	15	15	15	15	15
10	SCR	5.4	9.3	10.8	12.4	15.6	19.1	16.2	19.1	19.2
12	SCR	5.4	9.3	10.8	12.4	15.6	21.5	16.2	26.9	28.3
14	SCR	4.6	9.3	10.8	12.4	15.6	21.5	16.2	32	33.6
16	SCR	3.5	9.3	10.8	12.4	15.6	21.5	16.2	37.4	46.7

Performance Notes:

1. ETL certified assemblies.
2. Minimum kW:
   Staged control Single Phase = .5 kW per stage
   Staged control Three Phase = 1.5 kW.
   SCR controller, Single Phase = 1 kW
3. The recommended limit of 48 amps may be exceeded. This requires supplemental fusing to meet NEC code requirements. Contact your local Price representative for further details.
4. Maximum kW limitations are the lesser of:
   a. Coil selection chart
   b. Minimum airflow requirement of 70 cfm/kW.

PERFORMANCE DATA

SDV with Silencer (SDVQ) – AHRI Certification Rating Points

Fiberglass Liner – Straight Silencer

Unit Size	Rated Airflow	Minimum Operating Pressure Required	Radiated Sound Power Level, dB at 1.5 in.w.g. Octave Band						Discharge Sound Power Level, dB at 1.5 in.w.g. Octave Band					
	cfm	in.w.g.	2	3	4	5	6	7	2	3	4	5	6	7
4	150	0.01	57	47	39	32	28	26	59	47	32	22	20	24
5	250	0.01	63	47	39	33	28	30	68	52	34	32	29	25
6	400	0.01	62	52	44	36	32	26	68	53	39	25	23	25
7	550	0.04	59	53	44	37	34	27	68	55	40	30	29	30
8	700	0.01	63	52	46	40	35	30	70	56	41	38	38	37
9	900	0.01	62	53	46	41	38	35	72	57	43	33	38	40
10	1100	0.01	64	53	47	44	40	37	71	57	45	39	44	44
12	1600	0.01	66	54	51	49	43	37	71	58	49	44	48	49
14	2100	0.01	68	56	54	51	47	40	73	59	52	47	52	52
16	2800	0.01	70	61	57	54	51	44	75	60	52	50	54	52
24x16	5300	0.01	76	70	64	58	54	49	76	68	59	51	55	55

Performance Notes:

1. Sound power levels expressed in decibels, (dB) re 10^{-12} watts.
2. Sound power levels include duct end corrections per AHRI Standard 880-2017.

PERFORMANCE DATA

SDV with Integral Discharge Silencer (SDVQ) – Recommended Air Volume Ranges

Price Intelligent Controller (PIC)

Inlet Size	Min. Flow (CFM)	Max. Flow (CFM)
4	50	225
5	63	350
6	66	450
7	99	650
8	132	800
9	167	1050
10	221	1350
12	304	2100
14	439	3000
16	568	4000
24 x 16	1187	8000

Digital Controls

Unit Size	cfm Min.*	cfm Max.
4	50	225
5	63	350
6	66	450
7	99	650
8	132	800
9	167	1050
10	221	1350
12	304	2100
14	439	3000
16	568	4000
24 x 16	1187	8000

Notes:
Factory calibrated controls must be selected within the above flow range limits. A minimum value of 0 is also available. When an auxiliary flow setting is specified, the value must be greater than the minimum setting and within the range limits.
On controls mounted by Price but supplied by others, the air volume ranges are guidelines only.
*Minimum airflow limit is based on min .02 in.w.g. differential pressure signal from airflow sensor. Selection of airflow limits below the listed values is not recommended. Stability and accuracy may not be acceptable at lower than recommended airflow limits. The actual performance will vary depending on the terminal unit controls supplied.
Maximum airflow limit is based on max 1.0 in.w.g. differential pressure signal from the airflow sensor.
The table shows the recommended/available minimum airflows for popular single duct sizes. Airflow targets of 0 are typically not recommended due to the fresh air requirements of the occupied space.

PERFORMANCE DATA

SDV with Silencer (SDVQ) – Typical Selection Guide

Fiberglass Liner – Straight Silencer

Unit Size	Airflow	Basic Unit	Minimum ΔPs Across Assembly		Discharge NC Basic Unit ΔPs Across Unit								Radiated NC Basic Unit ΔPs Across Unit			
	cfm	in.w.g.	1 Row Coil in.w.g.	2 Row Coil in.w.g.	(1) 0.5 in.w.g.	(2) 0.5 in.w.g.	(1) 1.0 in.w.g.	(2) 1.0 in.w.g.	(1) 1.5 in.w.g.	(2) 1.5 in.w.g.	(2) 1.5 in.w.g.	(2) 3.0 in.w.g.	0.5 in.w.g.	1.0 in.w.g.	1.5 in.w.g.	3.0 in.w.g.
4	75	0.01	0.02	0.03	--	--	--	--	--	--	--	--	--	--	--	--
	125	0.01	0.03	0.05	--	--	--	--	--	--	--	--	--	--	--	--
	150	0.01	0.04	0.08	--	--	--	--	--	--	--	--	--	--	--	20
	225	0.01	0.05	0.11	21	--	23	20	24	21	25	23	25	26	27	28
5	125	0.01	0.03	0.05	--	--	--	--	--	--	20	--	--	--	--	--
	200	0.01	0.05	0.09	--	--	21	--	24	21	29	26	--	--	22	27
	250	0.01	0.07	0.15	--	--	25	22	28	25	33	30	--	23	26	32
	350	0.04	0.14	0.25	22	--	27	24	30	27	35	32	24	30	33	38
6	150	0.01	0.03	0.06	--	--	--	--	--	--	--	--	--	--	--	--
	225	0.01	0.05	0.11	--	--	--	--	--	--	21	--	--	--	--	--
	300	0.01	0.08	0.17	--	--	--	--	--	--	22	--	--	--	21	25
	400	0.01	0.12	0.24	--	--	21	--	23	20	27	24	--	23	25	29
	450	0.01	0.16	0.33	--	--	23	20	25	22	29	26	21	25	27	31
7	250	0.01	0.04	0.08	--	--	--	--	--	--	--	--	--	--	--	--
	350	0.02	0.08	0.15	--	--	--	--	--	--	--	--	--	--	--	--
	450	0.03	0.12	0.22	--	--	--	--	--	--	24	21	--	--	--	23
	550	0.04	0.17	0.31	--	--	21	--	24	21	28	25	--	--	22	27
	650	0.04	0.21	0.40	21	--	25	22	27	25	31	29	--	22	25	30
8	400	0.01	0.08	0.17	--	--	--	--	--	--	21	--	--	--	--	--
	500	0.01	0.12	0.24	--	--	--	--	21	--	25	22	--	--	20	24
	600	0.01	0.16	0.33	--	--	21	--	24	21	28	25	--	21	24	28
	700	0.01	0.2	0.42	20	--	24	21	26	24	30	28	20	24	27	31
	800	0.01	0.25	0.52	--	--	24	21	26	23	30	27	23	27	29	33
9	450	0.01	0.06	0.11	--	--	--	--	--	--	22	--	--	--	--	21
	650	0.01	0.10	0.20	--	--	21	--	23	21	28	25	--	--	20	26
	900	0.01	0.15	0.31	--	--	24	21	26	24	31	28	--	21	25	30
	1050	0.01	0.21	0.44	22	--	26	24	29	26	33	31	--	23	27	33
10	550	0.01	0.08	0.16	--	--	--	--	--	--	--	--	--	--	--	21
	750	0.01	0.12	0.25	--	--	--	--	--	--	25	23	--	--	22	26
	950	0.01	0.18	0.37	--	--	--	--	22	--	27	25	--	23	25	30
	1100	0.01	0.25	0.51	--	--	21	--	24	22	30	27	20	25	28	33
	1350	0.01	0.32	0.66	--	--	25	23	28	26	34	31	24	28	31	36
12	900	0.01	0.10	0.20	--	--	--	--	--	--	25	23	--	--	21	27
	1200	0.01	0.16	0.33	--	--	--	--	21	--	27	24	--	22	25	32
	1600	0.01	0.23	0.47	--	--	23	--	25	22	31	28	--	26	30	36
	1800	0.01	0.31	0.63	21	--	25	21	27	24	32	30	22	28	32	38
	2100	0.01	0.4	0.82	24	--	28	23	30	26	34	32	24	30	34	41
14	1000	0.01	0.07	0.13	--	--	--	--	--	--	21	--	--	--	--	26
	1500	0.01	0.12	0.25	--	--	--	--	22	--	28	25	--	23	26	33
	2100	0.01	0.2	0.4	20	--	25	21	28	24	33	31	22	28	32	38
	2500	0.01	0.28	0.58	23	--	28	24	30	27	36	34	25	31	35	41
	3000	0.01	0.38	0.79	26	20	31	26	33	30	39	36	28	34	38	44
16	1500	0.01	0.09	0.19	--	--	--	--	--	--	26	23	--	21	25	31
	2000	0.01	0.15	0.3	--	--	--	--	23	21	31	28	--	26	30	36
	2500	0.01	0.21	0.43	--	--	23	21	27	25	35	32	24	30	34	40
	2800	0.01	0.28	0.58	20	--	25	23	29	27	37	34	25	32	35	42
	3500	0.01	0.37	0.75	24	--	29	27	33	31	41	38	29	35	39	45
	4000	0.01	0.46	0.94	27	22	31	29	36	33	43	41	31	38	41	48
24x16	3000	0.01	0.13	0.28	--	--	--	--	23	20	31	27	25	30	32	37
	4000	0.01	0.21	0.44	--	--	23	21	27	25	34	32	30	35	38	42
	5300	0.01	0.31	0.64	21	--	27	25	31	29	38	36	36	40	43	47
	6000	0.01	0.42	0.86	23	--	29	27	33	31	40	38	38	42	45	50
	7000	0.01	0.54	1.11	25	22	31	29	36	33	42	40	41	45	48	53
	8000	0.01	0.68	1.39	27	24	33	31	37	35	44	42	43	48	50	55

Performance Notes:

1. NCs are derived from sound power levels, which are obtained in accordance with AHRI Standard 880-2017 and ASHRAE Standard 130-2016.
2. NCs are derived from sound power levels which include duct end corrections per AHRI Standard 880 -2017.
3. Blank spaces (--) indicate NCs less than 20.
4. ΔPs is the difference in static pressure from inlet to discharge of the unit.
5. ΔPs for terminal units with electric coil is equal to basic unit. Resistance of the coil elements is negligible.
6. ΔPt is the difference in total pressure from inlet to discharge of the unit.
7. NC values are calculated based on procedures outlined in AHRI Standard 885- 2008, "A Procedure for Estimating Occupied Space Sound Levels in the Application of Air Terminals and Air Outlets."

Radiated NC is based on a 5/8 in. mineral fiber tile ceiling per AHRI 885-2008, Appendix E typical attenuation values.

Total Deduction	Octave Band Mid Frequency, Hz					
	120	250	500	1000	2000	4000
All Sizes	18	19	20	26	31	36

(1) Discharge NC is based on environmental effect, end reflection, flex duct and sound power division. No deductions for lined duct are included. These calculations are not covered by AHRI 885-2008 Appendix E.

Total Deduction	Octave Band Mid Frequency, Hz					
	120	250	500	1000	2000	4000
< 300 cfm	22	22	27	28	30	22
300 – 700 cfm	25	25	30	31	33	25
> 700 cfm	27	27	32	33	35	27

(2) Discharge NC is based on environmental effect, end reflection, flex duct, sound power division and **lined duct** per AHRI 885-2008 Appendix E attenuation values.

Total Deduction	Octave Band Mid Frequency, Hz					
	120	250	500	1000	2000	4000
< 300 cfm	24	28	39	53	59	40
300 – 700 cfm	27	29	40	51	53	39
> 700 cfm	29	30	41	51	52	39

PERFORMANCE DATA

SDV with Silencer (SDVQ) – Typical Selection Guide

Hospital Grade Liner (FF/PL) – Straight Silencer

Unit Size	Airflow	Basic Unit	Minimum ΔPs Across Assembly		Discharge NC Basic Unit ΔPs Across Unit									Radiated NC Basic Unit ΔPs Across Unit			
	cfm	in.w.g.	1 Row Coil in.w.g.	2 Row Coil in.w.g.	-1 0.5 in.w.g.	-2 0.5 in.w.g.	-3 0.5 in.w.g.	-1 1.5 in.w.g.	-2 1.5 in.w.g.	-3 1.5 in.w.g.	-1 3.0 in.w.g.	-2 3.0 in.w.g.	-3 3.0 in.w.g.	0.5 in.w.g.	1.0 in.w.g.	1.5 in.w.g.	3.0 in.w.g.
4	75	0.01	0.02	0.03	--	--	--	--	22	--	--	26	--	--	--	--	--
	125	0.01	0.03	0.05	--	25	--	--	30	--	--	33	--	--	--	--	--
	150	0.01	0.03	0.06	--	28	--	--	32	--	--	35	--	--	--	--	--
	225	0.01	0.05	0.11	26	37	24	26	38	23	27	41	23	23	23	23	24
5	125	0.01	0.03	0.05	--	21	--	--	27	--	--	31	--	--	--	--	--
	200	0.01	0.05	0.09	--	27	--	21	33	--	23	37	--	--	--	--	--
	250	0.01	0.06	0.13	22	30	--	25	36	23	27	40	25	--	20	22	24
	350	0.01	0.11	0.22	26	33	23	29	37	26	31	41	28	27	29	31	33
6	150	0.01	0.03	0.06	--	--	--	--	24	--	--	28	--	--	--	--	--
	225	0.02	0.06	0.12	--	23	--	--	30	--	--	34	--	--	--	--	--
	300	0.04	0.11	0.2	--	25	--	--	31	--	20	35	--	--	--	21	22
	400	0.08	0.2	0.34	--	31	--	24	36	--	27	40	23	23	24	26	27
	450	0.1	0.25	0.42	22	34	--	27	39	22	30	42	25	25	27	28	30
7	250	0.02	0.05	0.09	--	20	--	--	29	--	--	34	--	--	--	--	--
	350	0.03	0.09	0.16	--	22	--	--	30	--	--	36	--	--	--	--	21
	450	0.05	0.14	0.24	--	26	--	21	34	--	25	39	21	--	--	22	26
	550	0.06	0.19	0.33	--	30	--	25	37	20	29	42	25	--	23	26	31
	650	0.08	0.25	0.44	22	34	--	28	40	24	32	44	28	22	27	30	35
8	400	0.01	0.08	0.17	--	25	--	--	33	--	23	38	20	--	--	--	24
	500	0.02	0.13	0.25	--	28	--	22	36	--	27	41	24	--	20	23	28
	600	0.03	0.18	0.35	--	31	--	25	38	22	29	43	27	--	23	26	31
	700	0.05	0.24	0.46	21	33	--	28	41	25	32	46	29	21	26	29	34
	800	0.06	0.3	0.57	20	32	--	27	40	25	32	45	29	23	28	31	36
9	450	0.01	0.06	0.11	--	24	--	--	34	--	23	40	--	--	--	--	21
	650	0.01	0.1	0.2	--	29	--	24	38	20	29	44	26	--	--	22	27
	900	0.01	0.16	0.34	--	31	--	27	40	23	32	46	28	--	24	27	32
	1050	0.01	0.21	0.44	21	33	--	29	42	26	34	48	31	21	26	29	35
10	550	0.01	0.08	0.16	--	26	--	--	34	--	23	39	20	--	--	--	25
	750	0.01	0.12	0.25	--	30	--	23	38	20	28	44	26	--	20	24	30
	950	0.02	0.19	0.38	--	31	--	24	39	22	30	45	27	--	25	28	34
	1100	0.02	0.24	0.48	--	33	--	27	41	24	32	47	30	21	27	31	37
	1350	0.03	0.34	0.68	23	35	--	30	44	28	36	49	33	25	31	34	40
12	900	0.01	0.1	0.2	--	24	--	24	35	21	31	41	28	--	21	25	33
	1200	0.01	0.16	0.33	--	26	--	25	35	23	33	42	30	--	25	30	37
	1600	0.01	0.25	0.52	--	30	--	29	38	27	37	45	34	22	29	34	41
	1800	0.01	0.31	0.63	20	32	--	31	40	29	39	46	36	24	31	35	43
	2100	0.01	0.4	0.82	23	34	--	34	43	31	41	49	38	26	33	38	45
14	1000	0.01	0.07	0.13	--	22	--	--	32	--	24	39	22	--	22	26	32
	1500	0.01	0.12	0.25	--	28	--	24	36	20	30	43	28	21	26	30	36
	2100	0.01	0.21	0.44	21	32	--	28	40	25	35	46	33	24	30	33	39
	2500	0.01	0.28	0.58	23	35	--	30	42	28	38	47	35	26	32	35	41
	3000	0.01	0.38	0.79	25	37	--	33	45	30	40	49	38	28	33	37	43
16	1500	0.01	0.09	0.19	--	26	--	--	37	--	28	44	25	--	21	26	33
	2000	0.01	0.15	0.3	--	28	--	24	39	21	31	47	29	--	26	30	38
	2500	0.01	0.21	0.43	--	30	--	27	42	24	34	49	32	22	30	34	42
	2800	0.01	0.25	0.52	--	33	--	28	43	25	36	50	33	24	31	36	43
	3500	0.01	0.37	0.75	23	38	--	32	45	28	39	52	36	27	35	39	47
	4000	0.01	0.46	0.94	25	41	--	34	46	30	41	53	38	30	37	42	49
24x16	3000	0.01	0.13	0.28	--	32	--	30	43	23	36	50	30	32	36	39	43
	4000	0.01	0.21	0.44	22	34	--	32	45	25	38	51	32	37	42	44	49
	5300	0.01	0.34	0.7	24	36	--	34	46	27	41	53	34	43	47	50	54
	6000	0.01	0.42	0.86	25	37	--	35	47	28	42	54	36	45	50	52	57
	7000	0.01	0.54	1.11	27	38	--	37	49	30	43	55	37	48	53	55	60
	8000	0.01	0.68	1.39	28	39	--	38	50	31	44	56	39	51	55	58	62

Performance Notes:

1. NCs are derived from sound power levels, which are obtained in accordance with AHRI Standard 880-2017 and ASHRAE Standard 130-2016.
2. NCs are derived from sound power levels which include duct end corrections per AHRI Standard 880-2017.
3. Blank spaces (--) indicate NCs less than 20.
4. ΔPs is the difference in static pressure from inlet to discharge of the unit.
5. ΔPs for terminal units with electric coil is equal to basic unit. Resistance of the coil elements is negligible.
6. ΔPt is the difference in total pressure from inlet to discharge of the unit.
7. NC values are calculated based on procedures outlined in AHRI Standard 885- 2008, "A Procedure for Estimating Occupied Space Sound Levels in the Application of Air Terminals and Air Outlets".

Radiated NC is based on a 5/8 in. mineral fiber tile ceiling per AHRI 885-2008 Appendix E typical attenuation values.

Total Deduction	Octave Band Mid Frequency, Hz					
	120	250	500	1000	2000	4000
All Sizes	18	19	20	26	31	36

(1) Discharge NC is based on environmental effect, end reflection, flex duct and sound power division. No deductions for lined duct are included. These calculations are not covered by AHRI 885-2008 Appendix E.

Total Deduction	Octave Band Mid Frequency, Hz					
	120	250	500	1000	2000	4000
< 300 cfm	22	22	27	28	30	22
300 – 700 cfm	25	25	30	31	33	25
> 700 cfm	27	27	32	33	35	27

(2) Discharge NC is based on environmental effect, end reflection and sound power division. No deductions for lined duct or flex duct are included. These calculations are not covered by AHRI 885-2008 Appendix E.

Total Deduction	Octave Band Mid Frequency, Hz					
	120	250	500	1000	2000	4000
< 300 cfm	16	12	9	8	9	10
300 – 700 cfm	19	15	12	11	12	13
> 700 cfm	21	17	14	13	14	16

(3) Discharge NC is based on environmental effect, end reflection, flex duct, sound power division and **lined duct** per AHRI 885-2008 Appendix E attenuation values.

Total Deduction	Octave Band Mid Frequency, Hz					
	120	250	500	1000	2000	4000
< 300 cfm	24	28	39	53	59	40
300 – 700 cfm	27	29	40	51	53	39
> 700 cfm	29	30	41	51	52	39

PERFORMANCE DATA

SDV with Silencer (SDVQ) – Radiated Sound Power Levels

Fiberglass Liner – Straight Silencer

Unit Size	Airflow	Sound Power Levels Lw dB re 10^{-12} Watts																							
		0.5 in.w.g. Octave Band						1.0 in.w.g. Octave Band						1.5 in.w.g. Octave Band						3.0 in.w.g. Octave Band					
	cfm	2	3	4	5	6	7	2	3	4	5	6	7	2	3	4	5	6	7	2	3	4	5	6	7
4	75	45	35	29	--	--	--	46	37	31	24	20	20	47	37	32	26	24	23	48	38	35	29	29	29
	125	53	43	34	26	--	--	54	44	36	29	24	22	54	45	37	30	27	25	55	46	40	33	33	31
	150	56	45	35	27	20	--	57	46	38	30	25	22	57	47	39	32	28	26	58	48	42	34	34	31
	225	62	51	39	31	23	18	63	52	42	33	28	24	63	53	43	35	31	27	64	54	46	38	37	33
5	125	46	31	--	--	--	--	50	34	--	--	--	--	52	36	26	--	--	--	56	38	29	22	21	25
	200	53	39	31	25	--	--	57	42	33	27	22	20	59	43	35	29	24	25	64	46	38	31	29	34
	250	56	43	35	29	21	--	60	45	38	31	26	25	63	47	39	33	28	30	67	50	42	35	33	38
	350	62	48	41	36	27	23	66	51	44	38	32	31	68	53	45	39	35	36	72	55	48	41	39	44
6	150	45	32	--	--	--	--	48	35	28	23	20	--	50	36	31	26	23	20	53	39	36	31	28	25
	225	50	38	29	23	--	--	53	41	34	27	24	19	55	43	36	30	27	22	58	46	41	35	31	27
	300	54	43	33	26	22	--	57	46	37	31	26	21	59	47	40	33	29	24	62	50	45	38	34	29
	400	57	47	36	29	24	18	60	50	41	34	29	23	62	52	44	36	32	26	66	55	48	41	37	31
	450	59	49	38	30	25	19	62	52	42	35	30	24	64	54	45	37	33	27	67	57	50	42	38	32
7	250	41	39	--	--	--	--	45	42	--	--	--	--	47	44	27	--	--	--	51	47	30	--	21	21
	350	46	43	30	23	20	--	50	46	33	25	23	--	52	48	35	26	25	19	56	51	37	27	28	27
	450	50	46	36	30	25	--	54	49	38	31	28	19	56	50	40	32	30	23	60	54	43	33	33	32
	550	53	48	40	35	30	--	57	51	43	36	33	22	59	53	44	37	34	27	63	56	47	38	37	35
	650	56	50	44	39	33	18	60	53	46	41	36	26	62	55	48	41	38	30	66	58	51	43	41	38
8	400	50	36	31	26	21	21	53	40	36	30	26	25	55	43	38	33	28	27	58	48	43	37	33	31
	500	53	40	34	29	24	22	56	44	39	33	28	26	58	47	41	35	31	28	61	51	46	39	36	32
	600	56	43	36	31	26	23	59	47	41	35	31	27	61	50	44	38	33	29	64	54	48	42	38	33
	700	58	45	38	33	28	24	61	50	43	37	32	28	63	52	46	40	35	30	66	57	50	44	39	34
	800	60	47	40	35	29	25	63	52	45	39	34	29	65	55	47	41	37	31	68	59	52	45	41	35
9	450	47	39	33	27	22	17	52	43	36	30	27	25	54	46	39	32	29	29	59	50	42	35	33	37
	650	51	43	37	32	27	20	56	47	40	35	31	28	58	50	43	37	34	32	63	54	46	40	38	40
	900	54	46	40	37	31	23	59	51	44	40	35	31	62	53	46	41	38	35	66	57	50	44	42	43
	1050	56	48	42	39	33	25	61	52	45	42	37	32	63	55	48	43	39	36	68	59	51	46	44	44
10	550	50	37	31	29	24	19	53	42	36	33	28	24	55	45	39	36	31	27	59	49	44	40	35	32
	750	54	41	35	33	28	23	57	45	40	37	32	28	59	48	43	39	35	31	63	53	48	43	39	36
	950	57	44	37	35	31	26	60	48	42	39	35	32	62	51	45	42	38	35	66	56	50	46	42	40
	1100	58	45	39	37	33	28	62	50	44	41	37	33	64	53	47	44	40	37	68	58	52	48	44	42
	1350	61	48	41	39	35	31	65	53	46	43	40	36	67	56	49	46	42	39	70	61	54	50	47	44
12	900	51	39	36	35	29	20	56	44	42	40	33	26	59	48	45	42	36	29	64	53	51	47	41	34
	1200	54	42	39	38	32	24	59	47	45	43	37	30	62	51	48	46	40	33	67	56	53	51	44	38
	1600	58	45	42	42	36	28	63	51	48	47	41	34	66	54	51	49	43	37	71	59	56	54	48	42
	1800	59	46	43	43	38	30	64	52	49	48	42	35	67	55	52	51	45	38	72	61	58	55	49	44
	2100	61	48	45	45	39	32	66	54	50	50	44	37	69	57	54	53	47	40	74	62	59	57	51	46
14	1000	50	39	37	35	31	20	55	45	42	39	36	25	58	48	45	42	38	29	63	53	50	47	42	34
	1500	56	43	42	40	36	26	60	49	47	44	40	32	63	52	50	47	43	35	68	58	55	52	47	40
	2100	60	47	46	44	40	31	65	53	51	48	44	37	68	56	54	51	47	40	72	61	59	56	51	45
	2500	62	49	48	46	42	34	67	54	53	50	46	39	70	58	56	53	49	42	75	63	61	58	53	48
	3000	65	51	50	48	44	37	69	56	55	53	49	42	72	60	58	55	51	45	77	65	63	60	55	50
16	1500	54	45	42	41	37	28	59	50	47	46	42	34	62	54	50	49	45	38	67	59	56	54	51	43
	2000	58	48	45	43	40	31	63	54	50	48	45	37	66	57	53	51	48	41	71	62	59	56	53	46
	2500	61	50	47	45	42	34	66	56	53	50	47	40	69	59	56	53	50	43	74	65	61	58	56	49
	2800	62	52	48	46	43	35	67	57	54	51	48	41	70	61	57	54	51	44	75	66	62	59	57	50
	3500	65	54	51	48	45	37	70	60	56	53	50	43	73	63	59	56	53	46	78	69	64	61	59	52
	4000	67	56	52	49	46	39	72	61	57	54	52	44	75	65	61	57	55	48	80	70	66	62	60	54
24x16	3000	62	55	50	44	39	31	66	59	53	47	42	35	68	62	55	48	43	37	71	66	59	51	46	40
	4000	66	59	55	49	45	37	70	63	58	51	48	41	72	66	60	53	49	43	76	70	63	56	52	46
	5300	70	63	59	54	51	43	74	67	62	56	53	47	76	70	64	58	54	49	80	74	67	60	57	52
	6000	72	65	61	56	53	46	76	69	64	58	55	49	78	72	66	60	57	51	81	76	69	62	59	55
	7000	74	67	63	58	56	49	78	71	67	61	58	52	80	74	69	62	60	54	84	78	72	65	62	58
	8000	76	69	65	60	59	52	80	73	69	63	61	55	82	76	71	65	62	57	85	80	74	67	65	61

Performance Notes:

1. Test data obtained in accordance with AHRI Standard 880-2017 and ASHRAE Standard 130-2016.
2. Sound power levels include duct end corrections per AHRI Standard 880-2017.
3. AHRI certified data is highlighted in blue. All other data are application ratings.
4. Application ratings are outside the scope of the AHRI 880 Certification Program.
5. Dashes (--) indicate sound power levels below 36-29-26-22-19-17 for each octave band; values below these sound power levels are considered below significance per AHRI 880.

PERFORMANCE DATA

SDV with Silencer (SDVQ) – Discharge Sound Power Levels

Fiberglass Liner – Straight Silencer

Unit Size	Airflow	Sound Power Levels Lw dB re 10^{-12} Watts																							
		0.5 in.w.g. Octave Band						1.0 in.w.g. Octave Band						1.5 in.w.g. Octave Band						3.0 in.w.g. Octave Band					
	cfm	2	3	4	5	6	7	2	3	4	5	6	7	2	3	4	5	6	7	2	3	4	5	6	7
4	75	46	33	--	--	--	--	48	35	--	--	--	17	48	36	--	--	--	19	50	38	26	--	--	23
	125	54	40	--	--	--	--	55	43	28	--	--	20	56	44	30	--	--	22	57	46	33	--	21	26
	150	57	43	27	--	--	18	58	45	30	--	19	22	59	47	32	--	20	24	60	49	36	22	22	27
	225	63	50	32	--	20	21	64	52	36	--	22	24	65	53	38	23	23	26	66	55	41	26	25	30
5	125	52	36	--	25	19	--	56	40	--	26	19	--	59	42	--	26	19	--	62	45	--	27	20	--
	200	59	43	--	29	26	18	63	46	28	30	26	20	65	48	30	30	26	21	69	52	33	31	26	22
	250	62	46	30	31	29	23	66	50	33	32	29	24	68	52	34	32	29	25	72	55	37	33	30	26
	350	67	51	36	34	34	29	70	54	39	35	34	30	73	56	40	35	34	31	77	60	43	36	34	33
6	150	50	33	--	--	--	--	53	35	--	--	--	--	55	37	--	--	--	--	58	39	--	--	--	--
	225	55	39	--	--	--	--	58	42	27	--	--	--	60	43	29	--	--	--	63	46	33	--	--	17
	300	59	44	29	--	--	--	62	46	32	--	--	--	64	48	34	--	--	19	67	51	38	--	--	23
	400	63	49	34	22	20	18	66	51	37	24	22	22	68	53	39	25	23	25	71	55	43	27	25	29
	450	64	50	36	25	23	21	67	53	39	26	25	25	69	55	41	27	26	27	72	57	45	29	28	31
7	250	51	40	--	--	--	--	54	43	--	--	--	--	56	45	--	--	--	--	59	48	27	--	--	--
	350	56	44	--	--	--	--	59	47	29	--	--	--	61	49	31	--	--	17	64	52	34	--	--	19
	450	60	47	31	24	23	21	63	51	34	25	24	23	65	52	36	25	24	24	68	56	39	25	24	26
	550	63	50	35	29	28	27	66	53	38	30	29	29	68	55	40	30	29	30	71	58	43	30	29	32
	650	66	52	38	33	32	32	69	55	41	34	33	34	71	57	43	34	33	35	74	60	46	34	33	37
8	400	58	41	30	29	23	21	61	44	33	30	25	25	63	46	34	30	26	27	66	49	37	31	28	31
	500	61	45	33	32	28	25	64	48	35	33	30	29	66	50	37	33	31	31	69	53	39	34	33	35
	600	63	48	35	35	32	28	66	51	37	36	34	32	68	53	39	36	35	34	71	56	41	37	37	38
	700	65	51	36	37	35	30	68	54	39	38	37	34	70	56	41	38	38	37	73	59	43	39	40	40
	800	67	53	38	39	38	33	70	56	40	40	40	37	72	58	42	40	41	39	75	61	45	41	43	43
9	450	58	41	27	--	23	24	61	45	31	--	25	28	63	47	33	--	26	30	66	51	38	23	27	33
	650	62	46	32	26	30	29	66	50	36	27	31	33	68	53	39	28	32	35	71	57	43	29	34	39
	900	67	51	37	31	35	34	70	55	41	33	37	38	72	57	43	33	38	40	75	61	48	35	40	44
	1050	69	53	39	34	38	37	72	57	43	35	40	40	74	60	46	36	41	43	77	64	50	37	42	46
10	550	54	41	30	27	28	25	58	45	34	28	30	29	61	47	36	29	31	31	65	52	40	30	32	34
	750	59	45	34	32	34	31	63	49	38	33	36	34	65	52	40	33	36	37	69	56	44	34	38	40
	950	62	48	37	35	38	35	66	53	41	36	40	39	69	55	43	37	41	41	73	59	47	38	42	45
	1100	64	50	39	37	41	38	68	55	42	38	43	42	71	57	45	39	44	44	75	61	48	40	45	47
	1350	67	53	41	40	45	42	71	58	45	41	46	46	74	60	47	42	47	48	78	64	51	43	49	51
12	900	58	43	33	32	36	33	62	48	39	34	38	36	65	51	42	36	39	38	69	56	47	39	41	42
	1200	61	47	37	36	40	38	65	51	42	38	42	42	68	54	45	40	44	44	72	59	50	43	46	47
	1600	64	50	40	40	45	44	68	55	46	42	47	47	71	58	49	44	48	49	75	62	54	47	50	53
	1800	65	51	42	41	46	46	70	56	47	44	49	49	72	59	50	46	50	51	77	64	55	49	52	55
	2100	67	53	44	43	49	49	71	58	49	46	51	52	74	61	52	48	52	54	78	66	57	51	54	58
14	1000	55	41	34	32	37	32	60	47	39	35	40	37	63	50	42	37	41	40	68	55	48	40	44	44
	1500	60	46	39	37	43	39	65	52	45	40	45	44	68	55	48	42	47	46	73	60	53	45	50	51
	2100	65	50	44	42	47	45	70	56	49	45	50	49	73	59	52	47	52	52	77	64	58	50	55	57
	2500	67	52	46	44	50	47	72	58	52	47	53	52	75	61	55	49	54	55	80	66	60	52	57	60
	3000	69	55	49	46	52	51	74	60	54	50	55	55	77	63	57	51	57	58	82	69	63	54	60	63
16	1500	57	43	35	37	39	33	63	49	40	40	42	37	66	53	43	42	43	40	72	59	49	45	46	45
	2000	61	46	39	41	43	38	66	53	44	44	46	43	70	56	47	46	48	46	76	62	53	49	51	50
	2500	64	49	42	44	47	42	70	55	47	47	50	47	73	59	50	49	52	50	79	65	56	52	55	55
	2800	65	51	43	45	49	45	71	57	49	48	52	49	75	60	52	50	54	52	80	67	57	53	57	57
	3500	68	54	46	48	53	49	74	60	52	51	56	53	78	63	55	53	57	56	83	69	60	56	60	61
	4000	70	55	48	50	55	51	76	61	53	53	58	56	79	65	57	55	60	59	85	71	62	58	63	63
24x16	3000	61	53	43	38	42	37	66	59	49	42	46	43	69	63	53	45	48	47	75	69	60	50	52	53
	4000	64	56	46	40	45	41	70	62	52	45	49	48	73	65	56	48	51	51	78	72	63	53	55	57
	5300	67	58	49	43	49	45	73	65	55	48	52	52	76	68	59	51	55	55	81	74	66	55	58	61
	6000	69	60	50	44	50	47	74	66	56	49	54	53	77	69	60	52	56	57	83	76	67	57	60	63
	7000	71	61	52	46	52	49	76	67	58	50	56	56	79	71	62	53	58	59	85	77	68	58	62	65
	8000	72	63	53	47	53	51	78	69	59	52	57	57	81	72	63	54	59	61	86	79	70	59	63	67

Performance Notes:

1. Test data obtained in accordance with AHRI Standard 880-2017 and ASHRAE Standard 130-2016.
2. Sound power levels include duct end corrections per AHRI Standard 880-2017.
3. AHRI certified data is highlighted in blue. All other data are application ratings.
4. Application ratings are outside the scope of the AHRI 880-2017 Certification Program.
5. Dashes (--) indicate sound power levels below 36-29-26-22-19-17 for each octave band; values below these sound power levels are considered below significance per AHRI 880-2017.

PERFORMANCE DATA

SDV with Silencer (SDVQ) – Radiated Sound Power Levels

Hospital Grade Liner (FF/PL) – Straight Silencer

Unit Size	Airflow	Sound Power Levels Lw dB re 10^{-12} Watts																							
		0.5 in.w.g. Octave Band						1.0 in.w.g. Octave Band						1.5 in.w.g. Octave Band						3.0 in.w.g. Octave Band					
	cfm	2	3	4	5	6	7	2	3	4	5	6	7	2	3	4	5	6	7	2	3	4	5	6	7
4	75	38	32	--	--	--	--	39	32	28	25	23	25	39	32	30	27	27	30	40	32	33	31	32	38
	125	48	42	32	28	23	19	48	42	35	32	28	27	49	43	37	34	31	32	49	43	40	38	37	40
	150	51	46	34	30	25	19	52	46	38	34	30	28	52	46	40	36	33	33	53	47	43	40	39	41
	225	58	54	40	36	29	21	59	55	43	39	34	29	59	55	45	42	37	34	60	55	48	45	43	42
5	125	42	32	--	25	21	19	44	34	29	29	27	27	45	35	31	31	31	31	46	38	35	35	37	39
	200	52	41	32	30	25	21	54	43	36	34	31	28	55	45	38	37	34	33	56	47	42	41	40	41
	250	57	46	36	33	26	22	58	48	40	37	33	29	59	49	42	39	36	34	61	51	46	44	42	41
	350	64	52	41	37	29	23	65	54	45	41	35	31	66	56	47	43	39	35	68	58	51	48	45	43
6	150	47	38	35	32	28	24	48	40	38	35	32	29	49	41	39	36	34	32	51	43	42	39	38	37
	225	52	43	37	33	29	23	54	45	40	36	33	29	55	46	41	37	35	32	56	48	44	40	39	37
	300	56	47	38	34	29	23	58	49	41	37	33	28	59	50	42	38	35	31	60	52	45	41	39	36
	400	60	51	40	35	29	23	62	52	42	37	33	28	62	54	44	39	35	31	64	55	46	42	39	36
	450	62	52	40	35	29	22	63	54	43	38	33	28	64	55	44	39	35	31	66	57	47	42	39	36
7	250	43	33	27	25	23	22	47	36	32	29	29	29	49	38	34	31	32	34	53	42	39	35	37	42
	350	49	38	31	29	26	23	53	42	36	33	31	30	55	44	39	35	34	35	59	48	43	39	39	43
	450	54	42	34	32	28	23	57	46	39	36	33	31	59	48	42	38	36	36	63	52	46	42	41	44
	550	57	46	36	34	29	24	61	49	41	38	34	32	63	52	44	40	37	36	67	55	49	44	42	44
	650	60	48	39	36	30	25	64	52	43	40	35	32	66	54	46	42	38	37	70	58	51	46	44	45
8	400	51	39	35	30	29	23	55	43	40	35	34	29	58	46	42	38	37	32	61	50	47	42	42	38
	500	54	42	37	33	32	25	58	47	42	37	36	31	61	49	45	40	39	35	64	53	50	44	44	41
	600	57	45	39	35	33	27	61	49	44	39	38	33	63	52	47	42	41	36	67	56	52	46	46	43
	700	59	47	41	36	35	28	63	52	46	41	40	35	65	54	48	44	42	38	69	59	53	48	47	44
	800	61	49	42	38	36	30	65	54	47	42	41	36	67	56	50	45	44	40	71	61	55	49	49	46
9	450	48	39	35	31	26	25	52	44	40	35	33	32	55	46	43	37	36	36	59	51	47	41	42	43
	650	53	44	39	35	31	30	57	49	44	39	37	37	59	51	47	42	40	41	64	56	52	46	46	48
	900	57	49	43	39	34	35	61	53	48	43	40	41	64	56	51	46	44	45	68	60	55	50	50	52
	1050	59	51	45	41	36	37	63	55	50	45	42	44	65	58	52	48	46	47	70	63	57	52	52	54
10	550	50	40	36	30	25	22	54	45	41	36	31	29	57	48	44	40	35	33	62	53	50	46	41	40
	750	54	44	40	34	29	26	59	49	45	40	35	32	61	52	48	44	39	36	66	57	53	50	45	43
	950	57	47	43	37	32	28	62	52	48	43	38	35	64	55	51	47	42	39	69	60	56	53	48	46
	1100	59	48	44	39	34	30	64	54	49	45	40	37	66	57	52	49	44	41	71	62	57	55	50	48
	1350	62	51	47	42	36	32	66	56	52	48	43	39	69	59	55	51	46	43	74	65	60	57	53	50
12	900	53	41	38	33	32	26	59	47	44	39	37	32	62	50	47	42	40	36	68	56	53	47	45	42
	1200	57	44	41	36	35	30	62	50	47	41	40	36	66	53	50	44	43	40	71	59	55	50	48	46
	1600	60	47	44	39	38	34	65	53	50	44	44	40	69	56	53	47	47	44	74	62	58	52	52	50
	1800	61	48	45	40	40	36	67	54	51	45	45	42	70	58	54	48	48	46	76	64	60	54	53	52
	2100	63	50	47	42	42	38	68	56	52	47	47	44	72	59	56	50	50	48	78	65	61	55	55	54
14	1000	46	43	43	38	33	27	52	49	48	44	39	34	55	52	52	47	43	38	61	57	57	53	49	45
	1500	51	47	47	42	37	31	57	53	52	47	43	38	60	56	55	51	46	42	66	61	61	57	52	48
	2100	55	51	50	44	40	34	61	56	55	50	46	41	64	59	58	54	49	45	70	65	64	60	55	52
	2500	57	52	52	46	41	36	63	58	57	52	47	42	66	61	60	55	51	46	72	67	65	61	57	53
	3000	60	54	53	47	43	37	65	60	59	53	49	44	69	63	62	57	53	48	74	68	67	63	59	55
16	1500	53	47	40	37	35	31	59	53	46	42	41	37	63	56	49	45	44	40	69	62	54	51	49	46
	2000	57	50	44	40	38	33	63	56	49	45	43	40	66	59	52	48	46	43	72	65	58	53	51	49
	2500	60	53	47	42	40	36	66	59	52	47	45	42	69	62	55	50	48	45	75	67	60	56	53	51
	2800	61	54	48	43	41	37	67	60	53	48	46	43	71	63	56	52	49	46	76	69	62	57	54	52
	3500	64	57	51	45	43	39	70	62	56	51	48	45	73	65	59	54	51	48	79	71	65	59	56	54
	4000	66	58	52	47	44	40	72	64	58	52	49	46	75	67	61	55	52	50	81	73	66	60	58	56
24x16	3000	67	60	55	50	45	40	71	63	58	53	48	43	73	65	60	55	50	45	76	68	63	59	54	49
	4000	72	64	59	54	49	44	75	67	62	57	52	48	77	69	64	59	54	50	80	73	68	63	58	53
	5300	76	68	63	58	52	49	79	71	67	61	56	52	81	73	69	63	58	54	85	77	72	67	61	58
	6000	78	70	65	59	54	51	81	73	69	63	58	54	83	75	71	65	60	56	87	78	74	69	63	60
	7000	80	72	68	62	56	53	84	75	71	65	60	57	86	77	73	67	62	59	89	81	76	71	65	62
	8000	82	74	70	63	58	55	86	77	73	67	62	59	88	79	75	69	64	61	91	83	78	73	67	64

Performance Notes:

1. Test data obtained in accordance with AHRI Standard 880-2017 and ASHRAE Standard 130-2016.
2. Sound power levels include duct end corrections per AHRI Standard 880-2017.
3. Application ratings are outside the scope of the AHRI 880-2017 Certification Program.
4. Dashes (--) indicate sound power levels below 36-29-26-22-19-17 for each octave band; values below these sound power levels are considered below significance per AHRI 880-2017.

PERFORMANCE DATA

SDV with Silencer (SDVQ) – Discharge Sound Data

Hospital Grade Liner (FF/PL) – Straight Silencer

Unit Size	Airflow	Sound Power Levels Lw dB re 10^{-12} Watts																							
		0.5 in.w.g. Octave Band						1.0 in.w.g. Octave Band						1.5 in.w.g. Octave Band						3.0 in.w.g. Octave Band					
	cfm	2	3	4	5	6	7	2	3	4	5	6	7	2	3	4	5	6	7	2	3	4	5	6	7
4	75	49	40	32	27	--	18	49	41	36	30	--	22	49	41	38	32	--	24	48	42	41	35	21	29
	125	57	49	38	34	--	20	57	50	42	37	--	24	57	50	44	39	21	27	57	51	47	42	26	31
	150	60	52	41	37	--	21	60	53	44	40	19	25	60	53	46	42	22	27	60	54	49	45	28	32
	225	67	59	46	42	--	22	67	60	49	45	23	27	66	60	51	47	26	29	66	61	54	50	31	33
5	125	52	42	36	31	--	19	54	44	39	34	--	23	55	46	41	35	--	25	56	48	45	38	22	30
	200	60	49	41	37	--	21	62	52	45	40	19	25	63	53	47	41	22	28	64	55	51	44	26	32
	250	64	53	44	39	--	22	65	55	48	42	21	26	66	57	50	44	23	29	68	59	54	47	28	33
	350	70	58	48	44	19	23	71	61	52	47	24	28	72	62	54	49	26	30	74	64	58	52	30	34
6	150	44	38	32	25	--	--	46	40	36	28	--	19	48	42	39	30	--	23	50	44	43	34	21	29
	225	51	46	38	31	--	--	53	48	42	34	--	22	55	50	44	36	20	26	57	52	48	40	26	32
	300	56	52	42	35	--	18	58	54	46	39	21	24	60	56	48	41	24	28	62	58	52	44	29	35
	400	61	58	46	39	--	20	63	60	50	43	24	27	65	61	52	45	27	30	67	64	56	49	33	37
	450	63	60	48	41	20	21	65	62	52	45	26	27	67	64	54	47	29	31	69	66	58	50	34	38
7	250	51	43	35	27	--	--	54	46	40	30	--	19	56	48	43	32	--	22	60	52	48	35	--	27
	350	56	49	40	33	20	20	59	52	45	36	22	25	61	54	48	38	23	28	64	58	53	41	25	33
	450	60	53	43	37	25	24	63	57	48	40	27	29	65	59	51	42	28	32	68	62	56	45	30	37
	550	62	57	46	40	29	27	66	60	51	43	31	32	67	62	53	45	32	35	71	65	58	48	34	40
	650	65	59	48	43	33	30	68	63	53	46	35	35	70	65	56	48	36	38	73	68	61	51	37	43
8	400	59	49	43	35	20	23	62	53	47	38	22	27	64	55	50	39	23	30	67	58	54	42	24	34
	500	61	52	46	38	27	28	65	56	50	41	28	32	67	58	53	43	29	35	70	62	57	46	30	39
	600	64	55	48	41	32	32	67	59	53	44	33	36	69	61	55	46	34	39	73	65	60	49	35	43
	700	66	58	50	44	36	36	69	62	55	46	37	40	71	64	57	48	38	42	74	68	62	51	39	46
	800	67	60	52	46	40	39	71	64	56	49	41	43	73	66	59	50	42	45	76	70	63	53	43	49
9	450	56	49	42	35	21	27	60	53	48	38	24	32	62	56	51	40	26	36	67	60	56	43	28	41
	650	61	54	47	40	30	33	65	58	52	43	33	38	67	61	55	45	34	42	71	65	61	48	37	47
	900	65	58	50	45	38	38	69	63	56	48	41	44	72	65	59	50	42	47	76	70	64	53	45	53
	1050	67	60	52	47	42	41	71	65	58	50	44	46	74	68	61	52	46	50	78	72	66	55	49	55
10	550	56	47	43	35	24	29	61	52	48	39	26	33	63	55	51	41	27	36	68	59	56	45	28	40
	750	60	52	47	39	32	36	65	56	52	43	34	40	67	59	55	45	35	42	72	63	60	49	36	46
	950	64	55	50	43	38	40	68	60	55	46	40	44	70	62	58	49	41	47	75	67	63	52	42	51
	1100	65	57	52	45	42	43	70	62	57	49	44	47	72	64	60	51	44	50	77	69	65	54	46	54
	1350	68	60	54	48	47	47	73	65	59	51	49	51	75	67	62	54	50	54	79	72	67	57	51	58
12	900	59	49	42	32	24	34	65	55	48	36	27	39	68	58	52	38	28	42	74	63	58	43	30	48
	1200	62	53	45	35	31	38	68	58	51	40	33	44	71	61	54	42	34	47	77	66	60	46	37	52
	1600	65	56	47	39	37	43	71	61	53	43	40	48	75	65	57	46	41	51	80	70	63	50	43	57
	1800	67	58	48	40	40	45	73	63	54	45	42	50	76	66	58	47	44	53	82	71	64	51	46	58
	2100	69	59	50	42	43	47	74	65	56	47	46	52	78	68	59	49	47	55	83	73	66	53	49	61
14	1000	56	47	42	35	30	35	61	53	48	39	33	40	65	57	52	42	34	42	71	63	58	47	37	47
	1500	60	51	45	39	37	40	66	57	51	43	39	45	69	61	55	46	41	48	75	67	61	50	43	53
	2100	64	55	48	42	42	45	70	61	54	46	45	50	73	64	58	49	46	52	79	70	64	54	49	57
	2500	66	56	49	44	45	47	72	62	55	48	47	52	75	66	59	51	49	55	81	72	65	55	51	60
	3000	68	58	51	45	48	50	74	64	57	50	50	55	77	68	61	53	52	57	83	74	67	57	54	62
16	1500	57	47	45	40	31	33	63	54	52	44	33	38	67	57	56	47	34	42	73	64	62	51	36	47
	2000	60	50	48	43	38	38	66	57	54	47	40	43	70	60	58	49	41	47	76	67	65	54	43	53
	2500	62	52	50	45	43	42	69	59	56	49	45	47	72	62	60	52	46	51	78	69	67	56	48	56
	2800	64	53	51	46	46	44	70	60	57	50	48	49	73	64	61	53	49	53	80	70	68	57	51	58
	3500	66	56	53	48	51	47	72	62	59	52	53	53	76	66	63	55	54	57	82	72	70	59	56	62
	4000	67	57	54	49	54	50	73	63	60	54	56	56	77	67	64	56	57	59	83	73	71	61	59	65
24x16	3000	61	55	51	43	40	44	67	61	58	49	44	50	70	65	61	53	46	54	76	71	67	59	50	61
	4000	63	57	53	45	43	46	69	63	59	51	47	53	72	67	63	55	50	57	78	73	69	61	54	63
	5300	66	59	55	46	46	49	71	65	61	53	51	55	75	69	65	56	53	59	80	75	71	62	57	66
	6000	67	60	56	47	48	50	72	66	62	53	52	56	76	69	65	57	54	60	81	76	71	63	59	67
	7000	68	61	56	48	50	51	73	67	63	54	54	58	77	70	66	58	56	61	83	76	72	64	60	68
	8000	69	61	57	49	51	52	75	68	63	55	55	59	78	71	67	59	58	63	84	77	73	65	62	69

Performance Notes:

1. Test data obtained in accordance with AHRI Standard 880-2017 and ASHRAE Standard 130-2016.
2. Sound power levels include duct end corrections per AHRI Standard 880-2017.
3. Application ratings are outside the scope of the AHRI 880-2017 Certification Program.
4. Dashes (--) indicate sound power levels below 36-29-26-22-19-17 for each octave band; values below these sound power levels are considered below significance per AHRI 880-2017.

price | TERMINAL UNITS

Product Improvement is a continuing endeavour at Price. Therefore, specifications are subject to change without notice. Consult your Price Sales Representative for current specifications or more detailed information. Not all products may be available in all geographic areas. All goods described in this document are warranted as described in the Limited Warranty shown at **priceindustries**.com. The complete Price product catalog can be viewed online at **priceindustries**.com.

® Price is a registered trademark of Price Industries Limited. © 2023. Printed in Canada. v100

EC
ELECTRIC COILS

price | TERMINAL UNITS

EC
Electric Coils

Electric reheat coils are available for single duct and fan powered terminal units. These factory mounted electric coils are ETL listed to meet electrical safety standards, and comply with dual designation CSA 236/UL 1995. Standalone coils supplied as duct heaters are certified in compliance with UL 1996.

The electric coils feature a compact, slide-in design that allows for easy maintenance in the field. The electric heaters make use of low watt density heating elements to minimize hot spots and thermal cut-out, as well as thermal safety switches to ensure safe operation.

For single duct units, the electric heater is a side-mounted, slide-in style unit specifically designed to mount in the extended terminal casing.

For fan powered units, the electric heat controls are interlocked and sequenced with the recirculating fan, ensuring that the heater is only energized when the recirculating fan is operating.

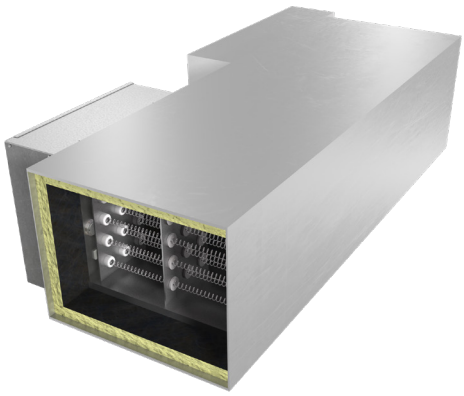

Single Duct Terminal with Electric Reheat

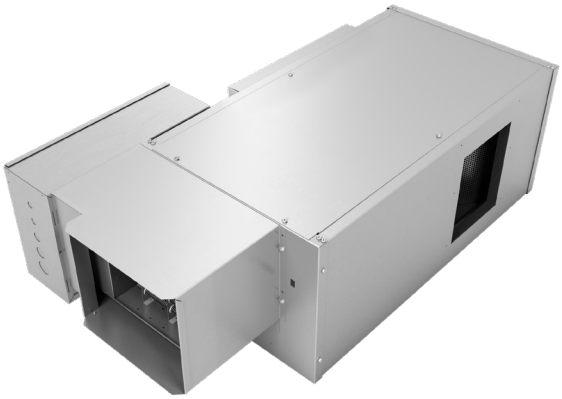

Fan Powered Terminal Unit with Electric Reheat

OPTIONAL FEATURES

Electric heaters are available with a number of options:

+ Primary or secondary fusing for added safety or to meet local electrical codes.
+ Silicon Controlled Rectifier (SCR) for analog heater control using proportional, pulsed AC, or pulsed DC signals. The SCR helps to extend element life and eliminates sound produced by contactors.
+ Solid State Relay (SSR) for quiet, staged operation.

Slide-in Electric Reheat

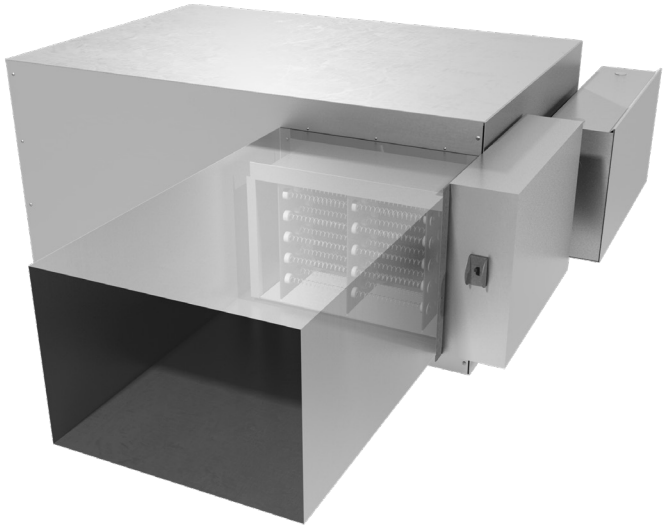

Discharge View of Fan Powered Terminal Unit with Electric Reheat

TYPICAL APPLICATIONS

Electric coils offer an alternative to water reheat coils and operate using standard building electrical power.

Electric coils are available as an accessory for single duct and fan powered terminal units, or as a stand-alone duct heater.

STANDARD DESIGN

+ 80/20 nickel-chromium elements
+ Automatic thermal reset
+ Secondary thermal cut-out
+ Fan interlock switch (fan powered only)

OPTIONAL FEATURES

+ Door interlock disconnect
+ Mainline fusing
+ Insulated heater section
+ SCR control with discharge air temperature sensor
+ Airflow switch (standard on single duct units)

DIMENSIONAL DATA

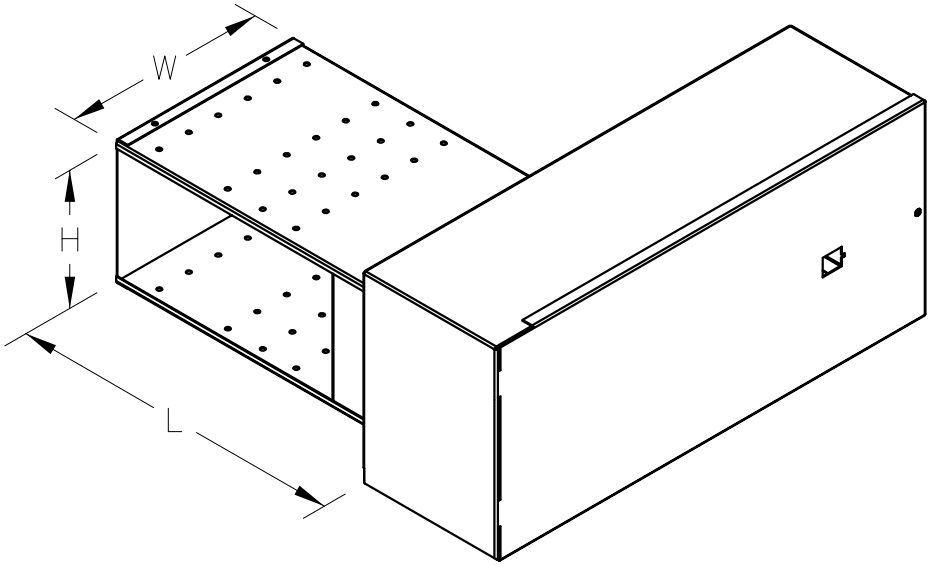

Electric Coils

Length (L)	Height (H)	Width (W)
11 in.	5 3/8 in.	8 in.
	7 3/8 in.	
13 in.	9 15/16 in.	
15 in.	12 7/16 in.	
19 in.	14 in.	
23 in.	15 in.	
37 in.	15 in.	

price | TERMINAL UNITS

Product Improvement is a continuing endeavour at Price. Therefore, specifications are subject to change without notice. Consult your Price Sales Representative for current specifications or more detailed information. Not all products may be available in all geographic areas. All goods described in this document are warranted as described in the Limited Warranty shown at **priceindustries**.com. The complete Price product catalog can be viewed online at **priceindustries**.com.

® Price is a registered trademark of Price Industries Limited. © 2018. Printed in Canada. v001

InVerde e+

Inverter-Based Cogeneration

Tecogen's Unequaled Ultra-Low Emissions CHP Unit

Key Features & Benefits

- ***33% Electrical Efficiency (94% overall) - Best in Class!***
- Produce your own electricity 24/7 at half the cost of utility power
- **InVerde e+ patented variable speed operation allows for 10 kW to 125 kW output**
- Fully scalable from 10kW to multi-MW
- **Rapid black-start for Type 10 Emergency Power Supply System (EPSS),** with grid-independent operation (125 kVA). Also meets CSA 282-15 for 10 and 15 second black-start
- **Superior part load efficiency with turndown to 10% load**
- Ultra-low emissions levels, SCAQMD compliant and NJDEP exempt
- Inverter-based streamlined utility interconnection, UL1741 certified for safe utility connection
- Microgrid compatible with licensed CERTS power balancing control software
- **4" WC gas pressure requirement, no costly gas booster needed**
- **Cloud-based, real-time performance monitoring available via Tecogen's CHP Insight**
- **Demand response input for automated dispatching**
- Streamlined multi-unit controls for lowest in class installation cost
- Available with indoor or outdoor acoustic enclosure
- **DC input feature for seamless battery and solar PV integration**
- Provides additional LEED points (Optimize Energy Performance)
- UL1741 certified for standardized and safe utility interconnection
- Smallest footprint and lowest cost per kW

Ultera EMISSION CONTROL

DESIGNED • ASSEMBLED IN THE USA
Using a majority of Made in America materials and components

INTERTEK ETL LISTED C US

Renewable Energy Compatible,
a Clean Energy Solution for Today & Tomorrow

NYSIR Certified

CSA C22.2 #100 Certified

CSA C22.2 #14

UL 2200 Certified

UL 1741 Certified

Tecogen products are covered under one or more of the following U.S. patents: 8,578,704 · 7,239,034 · 7,243,017 and other patents pending

Tecogen Inc. • 45 First Avenue, Waltham, MA 02451 • 781-466-6400 • www.tecogen.com

Inverter-Based Cogeneration

Specifications: [1, 2]

Engine	*Proven Low-Emission Industrial Natural Gas V-8 Engine, 700-2400 rpm*
Generator	*Water-Cooled Permanent Magnet Generator*
Inverter	*Customized Power Electronics with Patented Topology for Variable Speed and Standby Operation*
Controls	*TecoNet™ Microprocessor-Based System, Fully Automatic, Fault Monitoring, Lead/Lag Multiple Unit Control, Modbus / BACnet Networking & Remote Ethernet Communications*

Electric Output (kW)	75	100	125
Standalone Electric Capacity[3]	100 kW / 125 kVA		
Emergency Power Rating[4,5]	TYPE 10 EPSS Approved		
Thermal Output			
Engine (Jacket/Exhaust/Oil)	466,000 Btu/hr	613,000 Btu/hr	780,000 Btu/hr
Generator/Power Electronics	20,000 Btu/hr	27,000 Btu/hr	31,000 Btu/hr
Total	486,000 Btu/hr	640,000 Btu/hr	811,000 Btu/hr
Gas Input	876 scfh	1152 scfh	1455 scfh
Electrical Efficiency			
@LHV of 905 Btu/scf	32.3%	32.7%	32.4%
@HHV of 1020 Btu/scf	28.6%	29.0%	28.7%
Overall Efficiency			
@LHV of 905 Btu/scf	93.6%	94.1%	94.0%
@HHV of 1020 Btu/scf	83.0%	83.5%	83.4%
Required Gas Pressure (when operating at full load)	4 - 12" WC		
Hot Water Flow	30 gpm		
Maximum Leaving Water Temperature	230 °F		
Maximum Entering Water Temperature	180 °F		
Air Emissions (SCAQMD & NJ DEP Compliant)[6]			
• **NOx**	< 0.07 lb/MWh		
• **CO**	< 0.2 lb/MWh		
• **VOC**	< 0.1 lb/MWh		
Electrical Service	480 V, 3 PH, 3-wire		
Operating & Storage Temperature Range	-4° to 104° F (-20° to 40° C)		
Acoustic Level	66 dBa @ 20'	67 dBa @ 20'	69dBa @ 20'
Weight (indoor / outdoor)	4,300 lb / 4,800 lb		
Dimensions (indoor / outdoor)	7'6"L x 4 0"W x 5'9"H / 7'10"L x 4'11"W x 6'4"H		

ETL Listed - Labeled for compliance with UL 1741- Utility Interactive; Inverters, Converters, Controllers and Interconnection System Equipment for Use with Distributed Energy Resources, UL 2200 - Stationary Engine Generator Assemblies, CSA C22.2 #100 - Motors and Generators and CSA C22.2 #14 - Industrial Control Equipment
NYSIR Certified - NY Department of Public Service, New York Standardized Interconnection Requirements

1. *All specifications are +/- 5% and are subject to change without notice.*
2. *Above performance data is valid up to 104° F ambient temperature.*
3. *Standalone capacity is the lesser of 100 kW or 125 kVA.*
4. *The **InVerde e+,** can act as an emergency generator wherever natural gas is an approved emergency fuel source. Fuel storage requirements can be satisfied by utilizing propane; automatic changeover to propane from natural gas available upon request.*
5. *A single InVerde should not be used for critical life safety loads such a fire pump. In this instance, Tecogen recommends the application of redundant InVerde units or a separate, dedicated power source.*
6. *Emission limits are based on the Ultera Emissions option and includes 60% system efficiency (HHV) credit for Distributed Generation as per SCAQMD Rule 1110.2.*

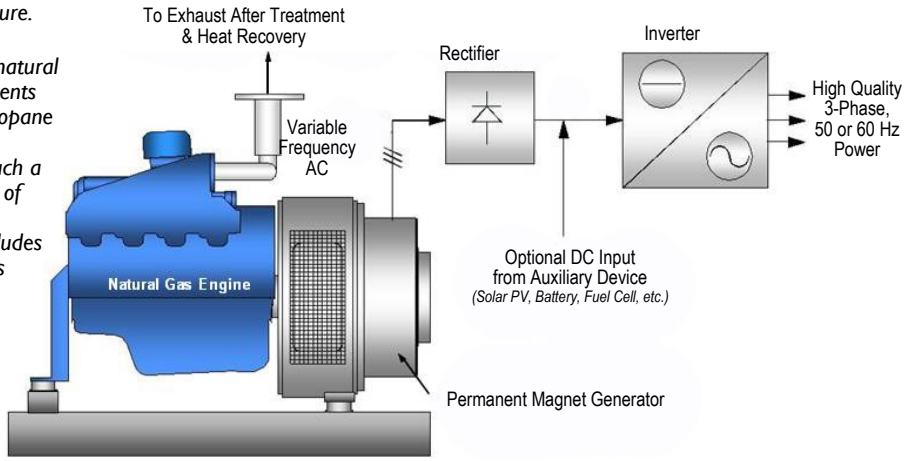

Tecogen®
Advanced Modular CHP Systems

Tecogen Inc. • 45 First Avenue, Waltham, MA 02451 • 781-466-6400 • www.tecogen.com

AQUA-BLEND® AB SERIES

aetherdbs

AQUA-BLEND® AB

OPERATION

The AQUA-BLEND® AB Series SNG Venturi Blending System provides a fuel directly compatible with natural gas. It is specifically designed for small to medium-large capacity 'base load' and industrial Standby Systems applications. The design is based on a single skid configuration combining the **AQUA-GAS® Vertical Gas Fired Waterbath** and a **VAPOR-JET® LPG/Air Venturi Blender.**

During operation, an LPG fired atmospheric burner heats a glycol/water 'waterbath' in the vaporizer. Liquid LPG enters the vaporizer's helical process coil and is heated by the waterbath and induces vaporization. The LPG vapor then passes out of the vaporizer's heat exchanger area into the vaporizer's external vapor header. The vapor exits the header and passes to the venturi blender.

In response to the pressure of the LPG/Air in the surge tank, a solenoid valve opens allowing vapor to pass through the venturi assembly and inspirate the required volume of air to mix with the LPG vapor.

This single skid design is Factory Mutual Approved, pre-piped, pre-wired and pre-tested at the Factory. It is safe, simple and proven. The **AQUA-BLEND®** remains a wildly popular choice for small to medium-large capacity NGconsumers including manufacturing companies, bakeries,institutions and other similar applications.

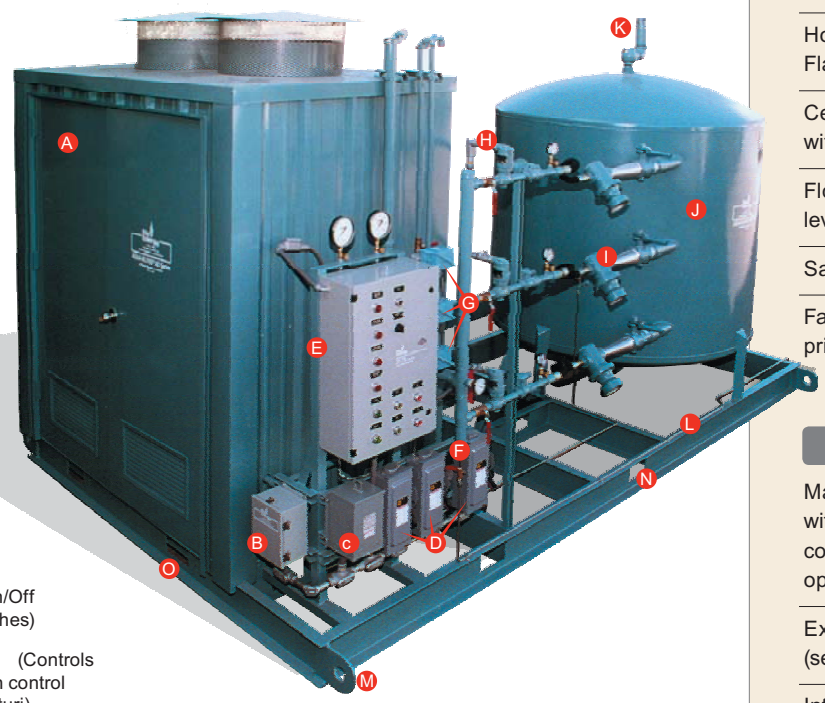

- **A** **AQUA-GAS® WB-V Series Vaporizer** (Double process coil, dual burner, FM Approved; see insert photo of vaporizer control panel)
- **B** **Junction Box** (Incoming Power)
- **C** **Transformer** (Optional - allows single feed of three-phase power to skid; provides for LPG pump and single phase control power)
- **D** **Disconnects** (Optional - two for Duplex LPG Pump Set; one for Transformer)
- **E** **Blender Control Panel** (Maintenance/Control House allows interior mounting; see insert photo on following page)
- **F** **Venturi Blender Header** ("blow down" line)
- **G** **Pressure Switches** (Controls On/Off of venturis; safety pressure switches)
- **H** **Venturi Solenoid Control Valve** (Controls solenoids work in conjunction with control pressure switches to activate venturi)
- **I** **Venturi Assembly** (Functions at pre- determined motive pressure to inspirate the correct volume of air to mix with LPG to create the SNG, or "natural gas replacement gas")
- **J** **SNG Surge Tank** (Connects to the customer's natural gas line)
- **K** Surge Tank Relief Valve
- **L** Integral one-piece skid
- **M** Lifting Lugs
- **N** Forklift access holes
- **O** Combustion Air Vents

FEATURES

- Integral skid mounted package with all operating and safety controls
- Only **two** pipe connections
- Factory Mutual (FM) Approved
- UL stamped external relief valve: 1.72 Mpa (250 Psig)
- Steel tube LPG heat exchanger designed and manufactured per ASME Pressure Vessel Code, Section VIII, Division 1
- LPG heat exchanger coil rating: 1.72 Mpa at 343°C (250 Psig at 650°F)
- Complies with NFPA Pamphlet 58 and NFPA Pamphlet 70
- Meets Class I, Group D per NFPA Pamphlet 70
- 100% turndown capability
- LPG fired atmospheric ring burner
- Honeywell UV Scanner and Flame Safeguard
- Central Blender Control Panel with First Out Annunciator
- Float activated high liquid LPG level shutdown switch
- Safety solenoid valve
- Factory calibrated and tested prior to shipment

OPTIONS

- Maintenance/Control House with fused disconnects and control panels (see inset photos opposite page)
- External Venturi Silencers (see back cover; **MOD-JET™**)
- Internal Noise Abatement System
- Fused Disconnects and Transformers
- Integrated **GAS-TRAP™** Demister

www.aetherdbs.com +1918.250.6601

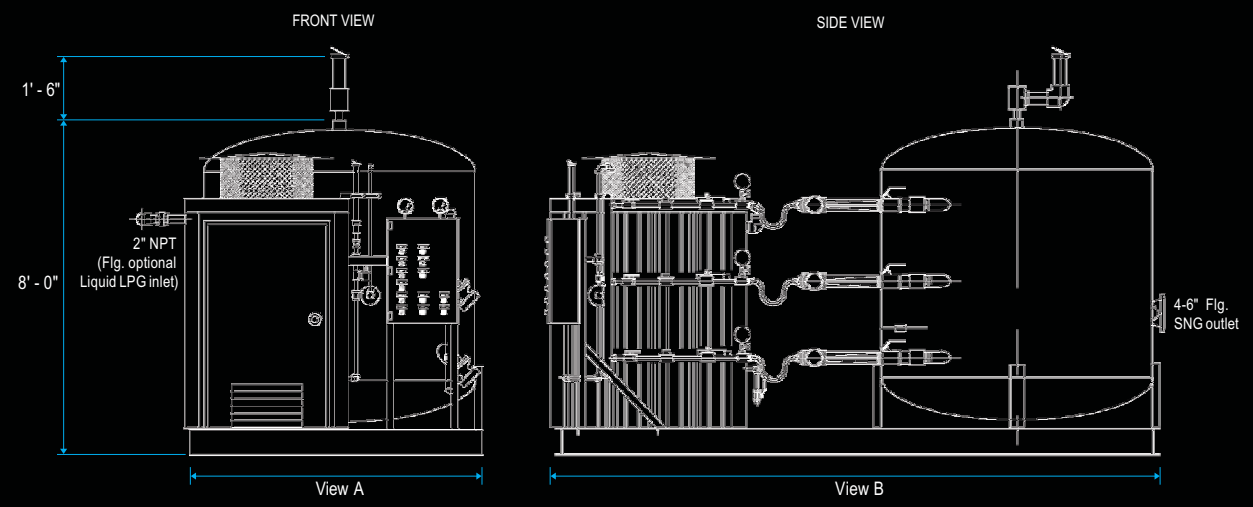

▼ Standard "Non-Maintenance/Control House" Vaporizer Design

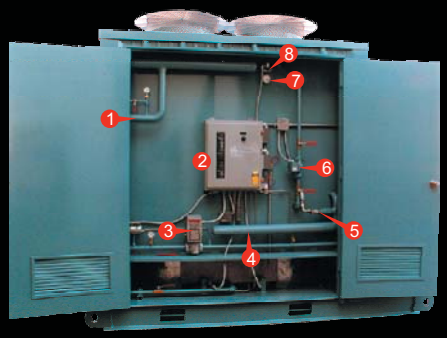

1. Liquid LPG Inlet
2. Control Panel
3. Main Gas Valve
4. Vapor LPG Header
5. High Liquid LPG Safety
6. Waterbath Circulation Pump *(Model WB800V and larger)*
7. Waterbath Temperature
8. Low Waterbath Safety

Interior views of Aether DBS 's optional Maintenance/Control Module with fussed disconnects and control panels. Contact Aether DBS for more details.

DIMENSIONAL DATA

SIZE	VIEW A	VIEW B	SURGE TANK CAPACITY
1	7'-0"	13'-0"	Cubic Ft. 100
	2134mm	3962mm	Cubic Meter 2.8
2	7'-0"	14'-6"	Cubic Ft. 200
	2134mm	4420 mm	Cubic Meter 5.6
3	9'-6"	16'-6"	Cubic Ft. 200
	2896 mm	5029 mm	Cubic Meter 5.6

AQUA-BLEND ® SIZING GUIDE

SIZE	CAPACITY MMBTU/ h	MODEL NUMBER	DISCHARGE (PSIG) 6	8	10	12	WEIGHT Lbs.
1	4	AB100V-204	●				3940
1	9	AB100V-209	●				3940
1	13	AB200V-213	●				3940
1	18	AB200V-318	●	●			3940
2	18	AB300V-418			●	●	4210
1	27	AB300V-327	●				4040
2	36	AB400V-430	●	●			5100
1	45	AB500V-345	●	●			4930
2	45	AB600V-445			●		5100
2	48	AB800V-448				●	5100
1	54	AB600V-354	●	●			4930
2	68	AB1000V-468			●		5575
2	68	AB800V-468	●				5575
2	72	AB800V-472		●			5575
3	72	AB1000V-472				●	7475
3	80	AB1000V-480			●		7475
3	90	AB1000V-490	●	●			7575
3	108	AB1200V-4108		●			7775
3	112	AB1600V-4112			●		7775
3	112	AB1600V-4112	●				7775
3	126	AB1600V-4126		●			7875
3	135	AB1600V-4135	●				7875
3	144	AB1600V-4144		●			7875

Standard capacities to 250MMBTU/h.

Use Size number in the Sizing Reference Guide and match with size designation in Dimensional Data table above.

Contact Aether DBS for capacities and discharge pressures not shown on the Sizing Reference Guide.

Refer to the **AQUA-GAS® WB-V** and **WB-H** brochures for specification data on the vaporizer.

Final sizing to be confirmed be Aether DBS factory (USA) and may vary from "typical" sizing shown above.

Product improvement is a continuing goal at Aether DBS. Designs and specifications are subject to change without notice.

Weights and dimensions are approximate. Do not use for design purposes or estimating air freight costs. **Contact factory.**

Aether DBS Manufacturing

- UL 508a Control Panel Shop
- ASME Pressure Vessel Code Stamps:
  U, UM, and R
- Factory Mutual Approved
- ISO 9001 Compliant

Our Products

Vaporizers

Blenders

SNG Packaged Solutions

Ammonia Flow Control

Natural Gas Line Heaters

Portable Water Treatment Units

Pump Sets

Accessories

aetherdbs

11385 E. 60th Place So.
Tulsa, Oklahoma 74146, USA
Phone: +1 918 250 6601
Fax: +1 918 254 5412
Visit us at: www.aetherdbs.com
Email: info@aetherdbs.com

Copyright 2011 - Aether DBS

Represented by:

ArtikControl™ WIC/WIF

ArtikControl™ WIC/WIF is a state-of-the-art energy saving refrigeration controller for walk-in freezers and coolers, with remote monitoring and control from anywhere via your Smart Phone or Tablet. Configurable energy saving refrigeration controller for walk-in freezers and coolers with: web-based scheduling and set-point optimization, integrated evaporator controls, adaptive defrost controls, failure alarming, predictive diagnostics and ready for demand-side-management (DSM) program integration.

Product Summary

- 120V / 208-240V AC -40°F to 120°F -40°F to 120°F
- 4 digit 7-segment LED IP65 Display w/ operating Status Lights
- (5) Analog Inputs for Air/Coil Sensors & RH Sensors
- (4) 2A Relay Outputs (to 230VAC)
- (2) PWM Open Collector Analog Outputs
- (2) 0-10V Analog Outputs
- Serial RS485 (Wired & Wireless)
- BMS and SCADA System Compatible
- Alarm Notifications via Text or Email
- Eliminates Icing Issues
- Consistent Temperature Control reduces unnecessary defrosts up to 87%
- For new equipment or upgrade to existing equipment
- Automatically record temperature for HACCP Compliance
- Set Temperature "Set Points"

Features & Benefits:

- Maximum Energy Efficiency +
- Reduced Spoilage +
- Reduced Liability +

= Peace of Mind!

Contact Refrigeration Technologies LLC at 888-286-3091 or www.refrigerationtechnologiesllc.com

Hello! Thank you for requesting information on Refrigeration Technologies' State of the Art: **ArtikControl™ WIC/WIF**.

Refrigeration Technologies' products are 100% tested proven and offer quantifiable savings.

All products come with a Standard Five (5) year Warranty.

The ArtikControl™ WIF/WIC offers a quick payback period of < 2 Years!

Energy Rebates: Refrigeration Technologies' will help to research, process and file energy rebate applications when available to provide maximum dollar savings!

RT ARTIK CONTROL
888-286-3091
www.refrigerationtechnologiesllc.com

COPYRIGHT REFRIGERATION TECHNOLOGIES 2018

ALL RIGHTS RESERVED, WWW.REFRIGERATIONTECHNOLOGIESLLC.COM

ArtikControl™

Installation Manual

ARTIK CONTROL™
WIC/WIF

WARNING

The installation of these devices should be done only by competent personnel who are experienced in electrical wiring and familiar with electrical codes. Contact with lethal voltages is possible during installation. Turn off the cooling system power and use a voltmeter to determine that no voltage is present before beginning the installation.

CAUTION

If the current evaporator box has excessive icing, do not attempt installation of new equipment.

Verify Temperature Difference

A typical temperature difference (TD) of between 5°F to 15°F degrees can be found between the Air temperature and the Coil temperature. If there is Little to NO difference between Coil and Air temperature of the box, this represents a problem and should be addressed before installation of the ArtikControl™.

ATTENTION

ArtikControl™ Controllers are designed for use with two-speed EC Motors and PWM Motors (Variable Speed) only.

Contents

Overview…… 4

What you will need……. 5

Pre-Installation Check List …… 6

Installing EC Motors …….. 7

Installing ArtikControl™ WIF Controller - Freezer…… 10

Installing ArtikControl™ WIC Controller – Cooler …… 13

Installing Digi Gateway ……..…… 16

Installing Digi Wireless Adapter……..…… 19

Diagram 1 – ArtikControl™ Controller wiring Overview…….…….…… 21

Diagram 2 – Wireless Module Interface Wiring ……..……. 22

Diagram 3 & 4 - Pre-Installation Wiring Diagrams …….…….. 23

Coil Thermistor Placement …… 24

EC Motors and Power Connector …….……..…… 27

ArtikControl™ Controller Programming …….…….. 27

ArtikControl™ Controller Default Values ……. 33

ArtikControl™ Controller Programming Steps ……. 35

Trouble Shooting Guide ……. 36

Controller Test Voltages …… 37

Controller Output Continuity Test ……. 38

Temperature Sensor – Ohms Resistance Chart …….. 39

User Interface (UI) Overview……. 40

Component Listing ……. 43

Overview

Thank you for your recent purchase of Refrigeration Technologies EC Motors and/or ArtikControl™ (WIF or WIC) Controller.

Refrigeration Technologies LLC is dedicated to bringing you the latest technologies to help you save energy and money in commercial walk-in cooler(s) & freezer(s) in your facilities. All of the products we manufacture and sell offer energy reducing solutions. By investing in these technologies, you will discover the ultimate in energy conservation.

EC (Electronically Commutated) Motors are a recent invention in the field of small electric motors that offer dramatic efficiency improvements in walk-in coolers and freezers. EC Motors are 70-80% more energy efficient than traditional shaded-pole motors. Because the amount of energy is reduced, the amount of heat produced is less as well. EC Motors typically produce only 45% as much heat as a shaded pole motor while on high speed, and at low speed (with the help of an EC Motor Controller), the heat output is reduced by 97%. Lastly, you should know that EC Motors have a long life (average 15 years), are virtually maintenance free, and offer a quick ROI.

PWM (Pulse Width Modulated) Motors as its name suggests, **pulse width modulation** speed control works by driving the motor with a series of "ON-OFF" pulses and varying the duty cycle, the fraction of time that the output voltage is "ON" compared to when it is "OFF", of the pulses while keeping the frequency constant.

ArtikControl™ (WIF or WIC) Controllers when paired with two-speed EC Motors or PWM Motors (Variable Speed), provide the ultimate in energy conservation for the evaporator coils of walk-in coolers and freezers. ArtikControl™ (WIF & WIC) Controllers use state-of-the-art technology to run fans at normal high speed when the system is cooling and switching to low speed with the cooling system reaches its set point and goes into idle mode. This allows for significant energy savings, as the EC Motor driven fans use a fraction of the energy when operating at a lower speed. This two-cycle system results in a 97% reduction of heat and a 95% reduction of energy consumption. The ArtikControl™ WIF Controller also controls the Defrost Cycle for the Evaporator. It uses an Air and Coil Sensor to determine Ice Build-up on the Coils. The Controller is an intelligant controller that starts to learn the nuances of the system, it will adjust the defrost cycle accordingly to maximize the defrost effectiveness and energy savings.

What You Will Need

These are some of the tools you may need to perform the installation of EC Motors and ArtikControl™ Controllers:

- Meter
- Cordless Drill
- 3/8 Socket Set
- Wire Stripper / Crimpers
- Nut Drivers (Optional)
- Allen Wrenches
- Electrical Tape
- Drill Bits (Up to ¾ inch)
- Flathead Screwdriver
- Phillips Screwdriver
- Caulk
- Wire Cutter

Pre-Installation Check List

- **115V or 208V**
  - **L1 –**
  - **L2 -**
- **How do Defrost Heaters Energize?**
  - **H1 –**
  - **H2 –**
  - **H3-**
- **Defrost Contactor (kH)**
  - **A1 – (should be to kC – Compressor contactor)**
  - **A2-**
- **Fans**
  - **F1 –**
  - **F2-**
- **DTFD**
  - **1 –**
  - **2-**
  - **3-**
- **High Temp Switch**
  - **Yellow –**
  - **White –**
- **LLS (Volts 115 or 208)**
  - **L1 –**
  - **L2 –**

Installation of EC Motors

Installation of EC Motors

1. Observe the rotation of the Fan blades of the unit, either Clockwise or Counter-clockwise.
2. Turn Evaporator unit power off, this could be located at a remote breaker panel.
3. Remove External Panels on Evaporator where the power line goes into the unit.
4. Use a Meter or Non-Contact power indicator to make sure power has been removed from the Unit. All Motors should have stopped spinning.
5. Remove fan guard(s) by removing the four nuts holding it in place.
6. Remove fan blade with an Allen Wrench (1/4 inch typically). Observe the relationship of the fan blade to the edge of the unit. This will allow for proper installation of the fan blade on the new EC Motor shaft. *Make sure that the Fan Blade is not damage during removal. A damaged Fan Blade will throw off balanced rotation and can cause damage to the EC Motors.*
7. Remove the retainer nuts that hold the bracket and motor to the front panel of the unit.
8. Unplug the motor(s) from the harness.
9. Remove the nuts holding the motor to the bracket assembly.
10. Run the Brown Wire (Motor Speed Control from the ArtikControl™ Controller) through the Evaporator box, running the wire along the path of the Motor Power wires. Allow the excess wire to remain. We will use this to loop in each speed control wire from the Motors. (Only if Utilizing an ArtikControl™ Controller with the EC Motors.)
11. Verify that the proper voltage motor is being installed. White labeled motors are 120 volts and Yellow labeled motors are 208 volts. **You should be installing Yellow Label motors**.
12. Mount the new motor on the existing bracket using new lock nuts provided.
13. Carefully insert motor and bracket back into the unit.
14. Attach the Speed Control Wires to the Brown Wire using Pigtail connectors provided. Work from the Controller side to the opposite end. This will allow you to utilize and take-up any slack in the Brown Wire. (Only if Utilizing an ArtikControl™ Controller with the EC Motors.)
15. Plug the motor power unit back into the harness. Tie wrap the slack of the power cord and control wire(s) so that it does not get caught in the fan operation. Attach to bracket assembly.
16. Install fan blade, making sure to duplicate the position of the original configuration. Check for proper operation of the fan by spinning the fan by hand. Observe the rotation of the fan blade to make sure it spins smoothly without contacting the sides, and to make sure rotation is balanced.
17. Replace fan guard with the original four nuts. Repeat steps 11-17 for each Motor being installed.

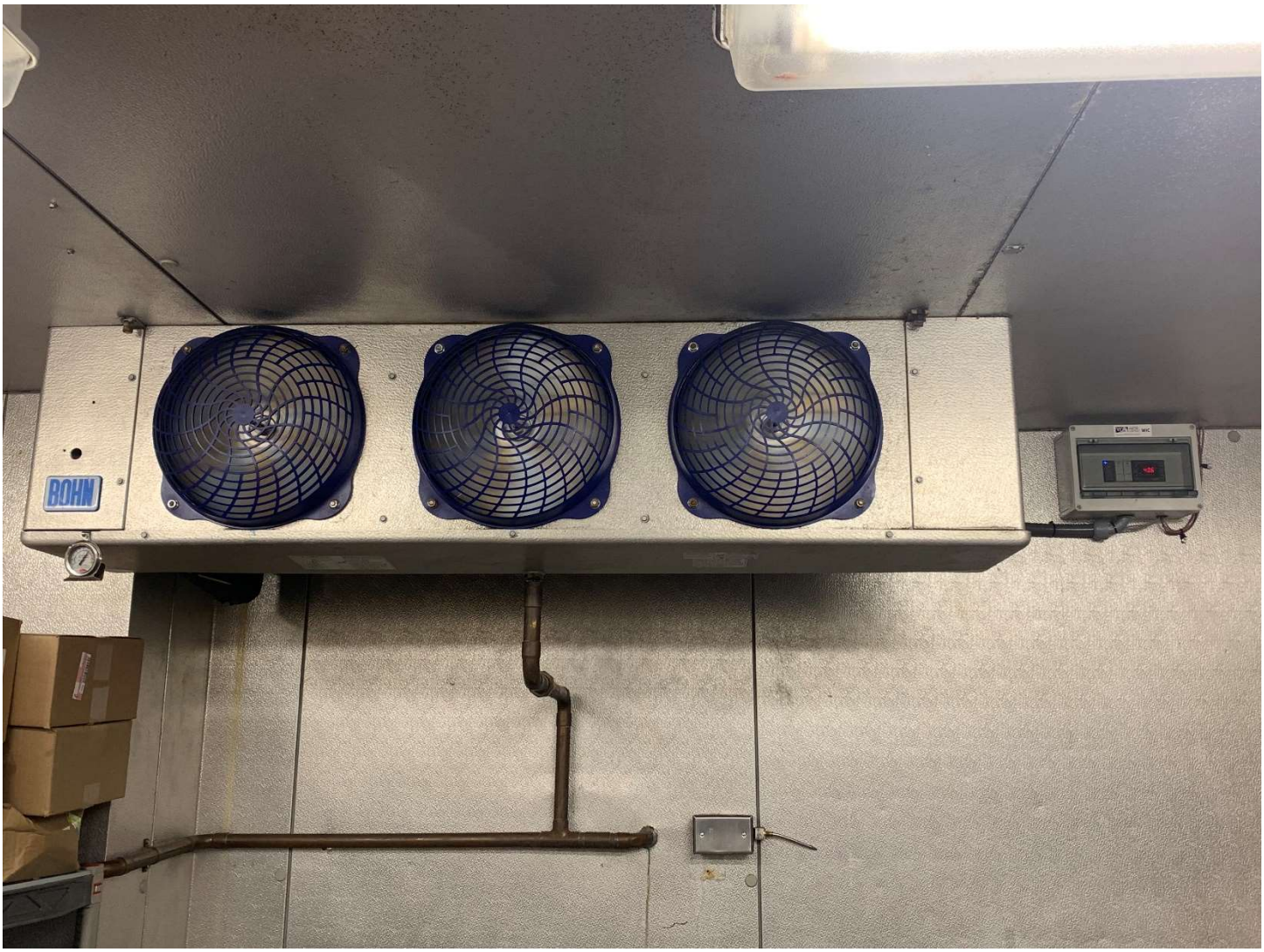
BOHN

ArtikControl™ WIF Controller Installation

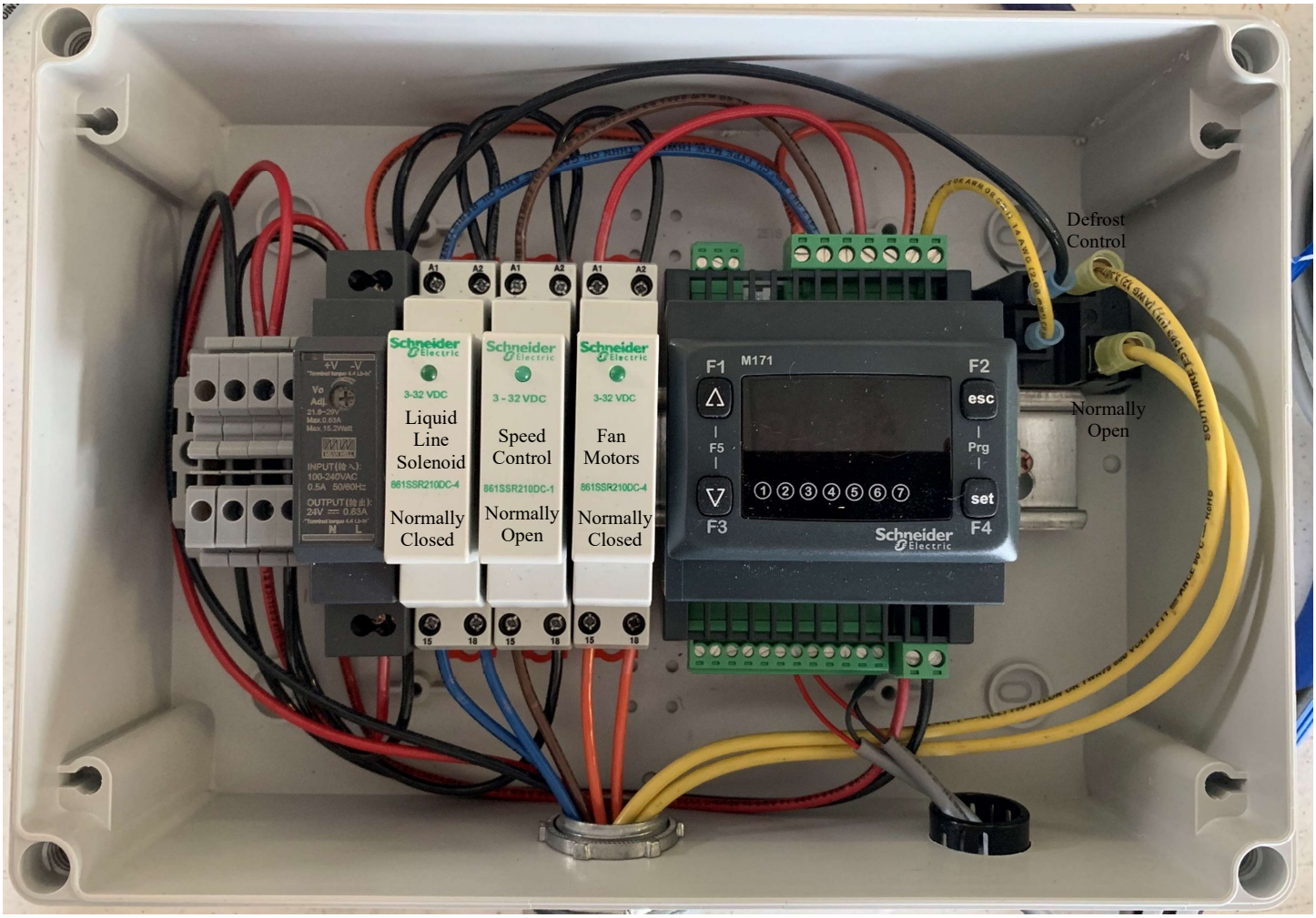

Installing ArtikControl™ WIF Controller

Installing an ArtikControl™ WIF Controller in a Walk-in Freezer Evaporator.

******* Before Beginning Wiring Installation of ArtikControl™ WIF Controller verify pre-existing wiring layout. Should match Diagram 3. Make notes if any wiring that is not consistent with Diagram 3 as this will affect wiring of the ArtikControl™ WIF Controller. *******

Freezer with 208v Motors and Heater Installation Only:

1. Locate the Condensing Unit outside.
2. Open the Panels.
3. Turn off Main Breaker feeding the Freezer Circuit.
4. Locate the Defrost Timer (see photo 3)
5. **Remove** the Wire going to the 'X' terminal location on the connector block.
6. Place Electrical tape on the end and tie off wire in a safe location.
7. Place jumper wires from terminals 2, 3, and 4 using Pigtail connector provided.
8. Turn on the Main Breaker feeding the Freezer Circuit.
9. Replace Panels.

Controller Installation Procedure:

1. Observe the rotation of the Fan blades of the unit, either Clockwise or Counter-clockwise.
2. Turn Evaporator unit power off, this could be located at a remote breaker panel.
3. Remove External Panels on Evaporator where the power line goes into the unit.
4. Use a Meter or Non-Contact power indicator to make sure power has been removed from the Unit. All Motors should have stopped spinning.
5. Review the Current Wiring Layout to get an understanding of where power and control voltages are coming from and going to.
6. Determine best location for the 'ArtikControl™ WIF Controller. Should be located where the power comes in for the motors, best possible location.
7. Locate the Thermostat controller.
8. Remove the Covers from the Thermostat Controller.
9. Place a jumper between the two lugs for the Thermostat, thus disabling the Thermostat or remove completely.
10. Replace the Thermostat Covers.
11. Remove the End Covers on the Evaporator.
12. Remove the Cover of the Controller.
13. Affix the Controller housing where determined
14. Drill a Hole in the End Cover to allow the wires to be run through.
15. Install a Grommet or Liquid tight Flexible Metal Conduit (**LFMC**) Connector into the hole that was drilled.

16. Take the Black, Red, Purple, Orange, Yellow and Brown wires and feed them through the Grommet opening in the end plate. (If not installing EC Motors, Brown wire should remain coiled up. Secure the Brown wire.)
17. Run the Brown Wire to each of the Speed Control Wires for the EC Motors.
18. Run the Purple wires (Liquid Line Solenoid Control) through the Evaporator box, running the wire along the path of the Motor Power Wires in the box. The Purple wires should extend to the Solenoid Valve.
    They can also be connected at the Buss Bar were the Solenoid wires connect to, connect to the L1 Power side of the Solenoid.
19. Remove the Wire from the Solenoid which comes from the Thermostat and connect the Purple wire (18) to this wire, connect the other Purple wire (15) to the Solenoid.
20. Locate the Power wires for the Fan Motors. Cut one of the power leads, connect the Orange wires into the fan motor power lead. Orange wire (18) should be connected to the feed side of the power wire and the Orange wire (15) should be connected to the Load side of the fan power wire.
21. Connect the Black Wire to L1 Power in the Buss Bar.
22. Connect the Red Wire to L2 Power in the Buss Bar.
23. Remove the Defrost Termination Delay timer.
24. Remove the Heater Limit Switch.
25. Locate the Heater Contactor control wire, cut this wire and place the Yellow wires inline. The Yellow wire (18) should be on the power side and the Yellow wire (15) should be on the load end, going to the contactor.

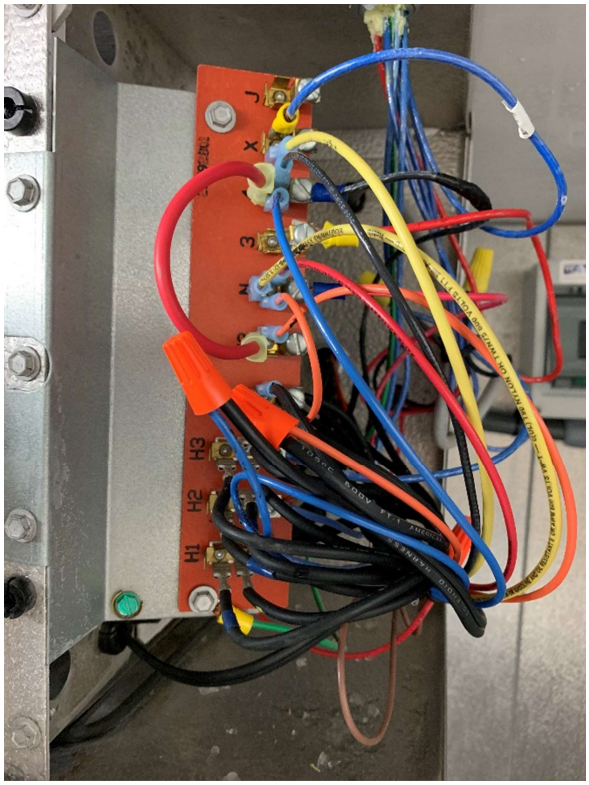

26. After removing Defrost Termination Delay Timer and Heater Contactor make sure you have power to both sides of the Motors (F1 & F2). Typically, you will have to add a jumper to provide power to one side of the Motors.
27. Re-attach the End Covers.
28. Place the Thermistor (Coil Sensor marked with an ‘C’ on the label) which is connected to AI2 on the ArtikControl™ Controller into the Evaporator Coils on the Cold side lower section. See Diagram 5 on Page 24.
29. Place the Thermistor (Air Sensor marked with an ‘A’ on the label) which is connected to AI1 On the ArtikControl™ Controller onto the Box Ceiling slightly away from the Evaporator and not directly in the air flow path.
30. **Turn ALL Power back on.**
31. LED Display on the Controller should illuminate, and the Fans should move after a slight initialization time frame (30 secs). The movement of the fans upon voltage turn on might be in the opposite direction until they find home. Once they initialize, they should spin in the proper direction.

ArtikControl™ WIC Controller Installation

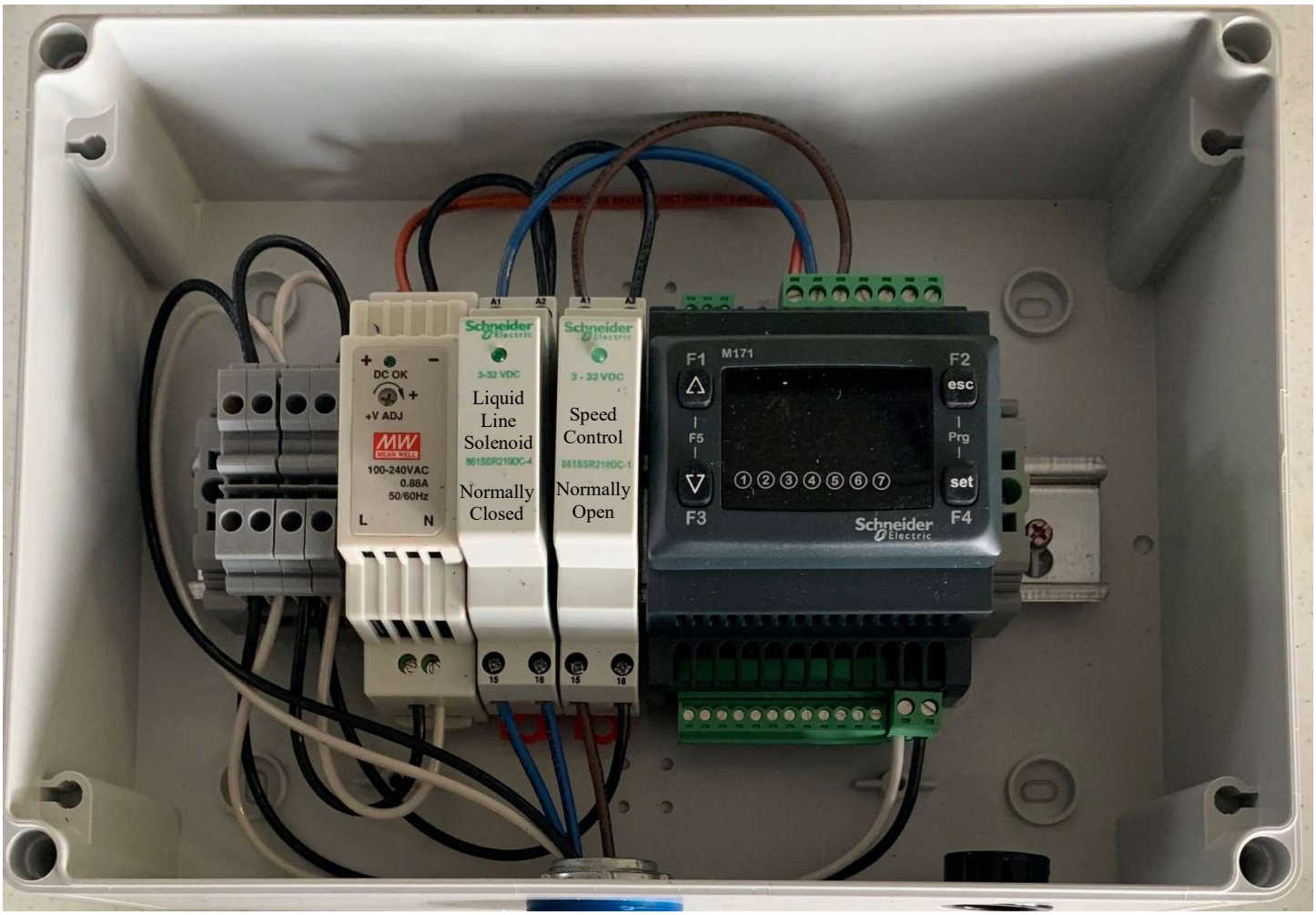

Installation of ArtikControl™ WIC Controller in Cooler

Installing an ArtikControl™ WIC Controller in a Walk-in Cooler Evaporator.

******* Before Beginning Wiring Installation of ArtikControl™ WIC Controller verify pre-existing wiring layout. Should match Diagram 4. Make notes if any wiring that is not consistent with Diagram 4 as this will affect wiring of the ArtikControl™ WIC Controller. *******

Controller Installation Procedure:

1. Observe the rotation of the Fan blades of the unit, either Clockwise or Counter-clockwise.
2. Turn Evaporator unit power off, this could be located at a remote breaker panel.
3. Remove External Panels on Evaporator where the power line goes into the unit.
4. Use a Meter or Non-Contact power indicator to make sure power has been removed from the Unit. All Motors should have stopped spinning.
5. Determine best location for the 'ArtikControl™ WIC Controller'. Should be located where the power comes in for the motors, best possible location.
6. Locate the Thermostat controller.
7. Remove the Covers from the Thermostat Controller.
8. Place a jumper between the two lugs for the Thermostat, thus disabling the Thermostat or remove completely.
9. Replace the Thermostat Covers.
10. Remove the End Covers on the Evaporator.
11. Remove the Cover of the Controller.
12. Affix the Controller housing where determined
13. Drill a Hole in the End Cover to allow the wires to be run through.
14. Install a Grommet or Liquid tight Flexible Metal Conduit (**LFMC**) Connector into the hole that was drilled.
15. Take the Black, White, Purple, and Brown wires and feed them through the Grommet/LFMC Connector opening in the end plate. (If not installing EC Motors, Brown wire should remain coiled up. Secure the Brown wire.)
16. Run the Brown Wire to Each of the EC Motor Speed Control Wires. Make sure that the Power going to the Speed Control Wire is in the Same Power Phase as the Motor Power.
17. Run the Purple wires (Liquid Line Solenoid Control) through the Evaporator box, running the wire along the path of the Motor Power Wires in the box. The Purple wires should extend to the Solenoid Valve. Connections can also be accomplished on the Buss Bar Side.
18. Remove the Wire from the Solenoid which comes from the Thermostat and connect the Purple wire labeled (18) to this wire, connect the other Purple wire labeled (15) to the Solenoid.
19. Connect the Black Wire to L1 Power in the Buss Bar.
20. Connect the White Wire to Neutral Power in the Buss Bar.
21. Re-attach the End Covers.

Continued Next Page.

22. Place the Thermistor (Coil Sensor marked with an ‘C’ on the label) which is connected to AI2 on the ArtikControl™ Controller into the Evaporator Coils on the Cold side lower section.
23. Place the Thermistor (Air Sensor marked with an ‘A’ on the label) which is connected to AI1 On the ArtikControl™ Controller onto the Box Ceiling slightly away from the Evaporator and not directly in the air flow path.
24. **Turn ALL Power back on.**
25. LED Display on the Controller should illuminate, and the Fans should move after a slight initialization time frame (30 secs). The movement of the fans upon voltage turn on might be in the opposite direction until they find home. Once they initialize, they should spin in the proper direction.

X4 Gateway Installation

The ConnectPort X4 Gateway is the Cellular/Ethernet Interface Device between the ArtikControl™ Controller (WIF or WIC) and the ArtikControl™ User Interface Website.

To Install the Gateway, you will need to find a Suitable location that has the following things:

1. Power Source – Gateway will Require 115 V A/C power source to be located within a 3ft area of where the Gateway will be place.
2. Ethernet Port – Have access to connect an Ethernet cable from a wall jack to the Gateway. Since Ethernet cable comes in varying lengths the wall jack can be up to about 25 ft away. Make sure that the Ethernet Port on the wall jack is properly set-up through the server.
3. Have access to be able to bring the Communications wire (18/3) from the ArtikControl™ Controller into the Gateway. This will typically require the communications wire to be dropped through the ceiling and down along a wall were the Gateway will be secured.

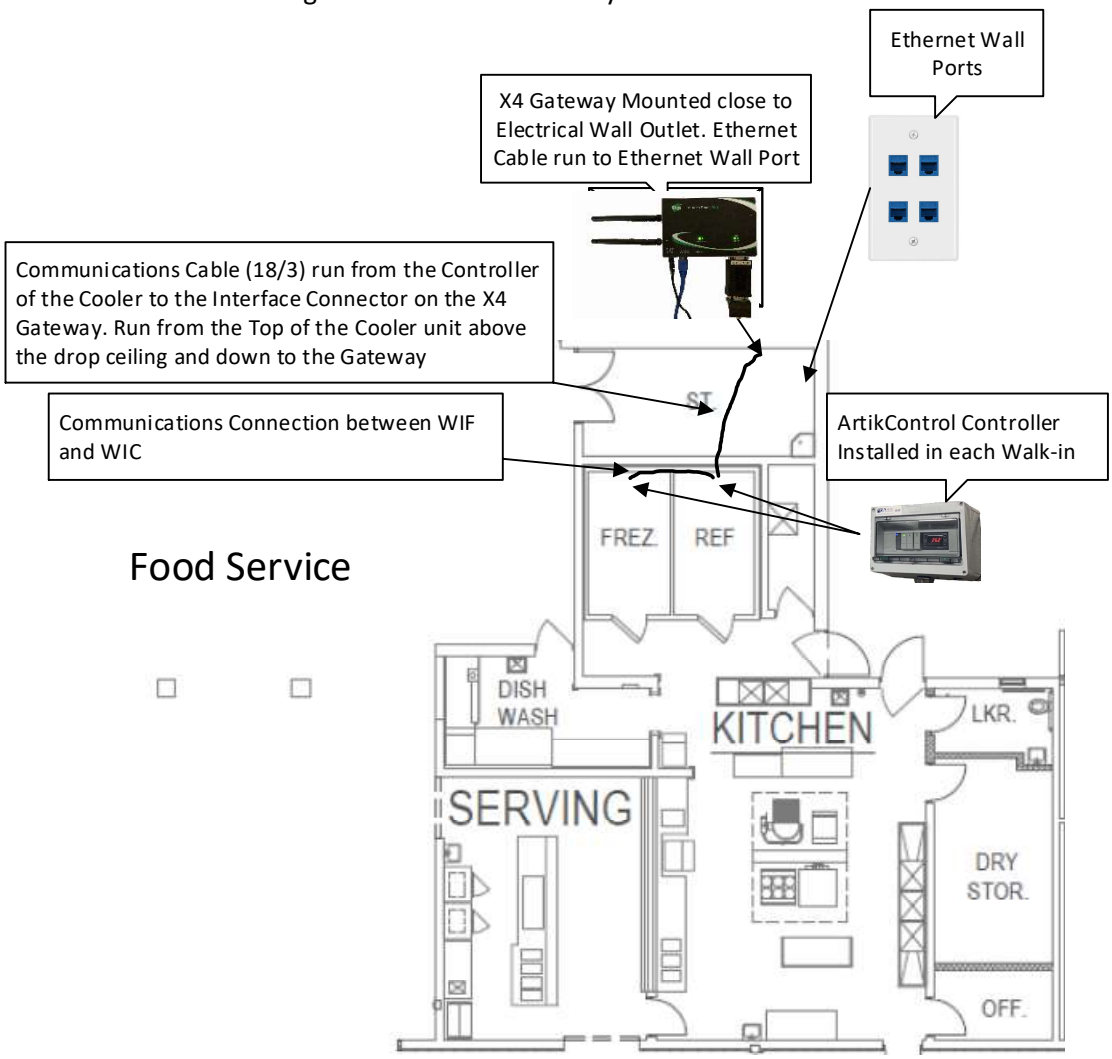

An Example Layout could look something like this.

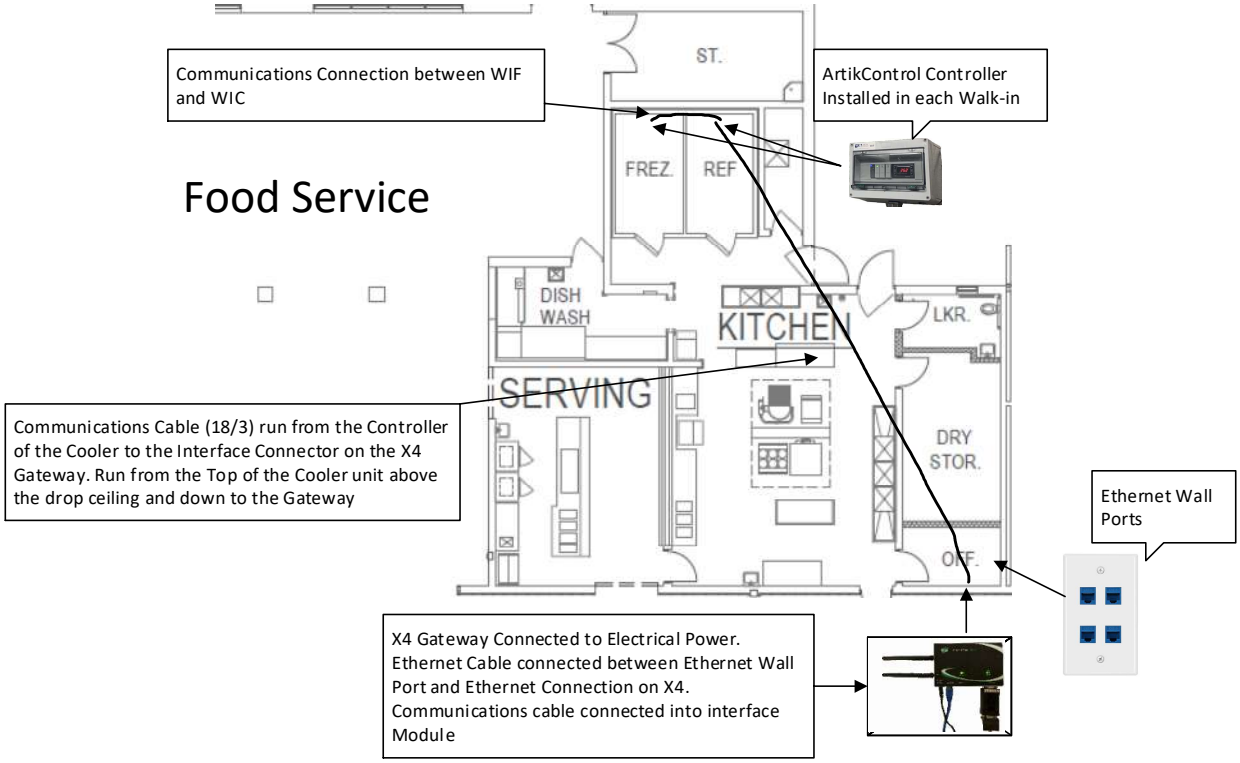

You may have to Run the Communications Wire a good distance to reach a location that has an Ethernet Port available, like in an Office.

Communication Wire Connection at the Controller. Should be Red(-), White(+), then Green(GND).

Communication Wire Connection into the Interface Module on the Gateway.

The Communications Wire is an 18/3 wire. You will have a Red Wire, White Wire and Green Wire. For the Connections into the Interface Module you have White Wire (+), Red Wire (-), and Green Wire (GND).

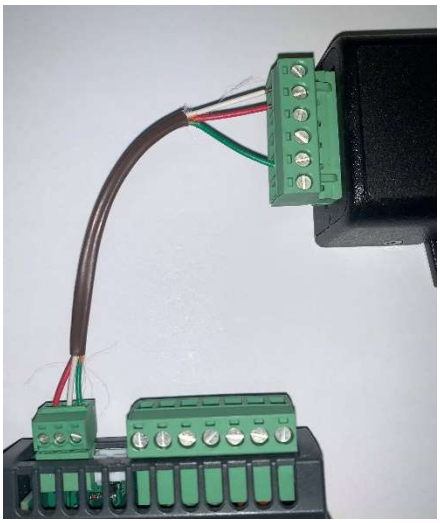

As far as color orientation, as long as the (+) and (-) connection are switched going from the controller to the Interface you are fine.

Communication Wire Coming out of the ArtikControl™ Controllers

Communication Wire connections from one ArtikControl™ Controller to another. Controllers should always be connected using Daisy Chain.

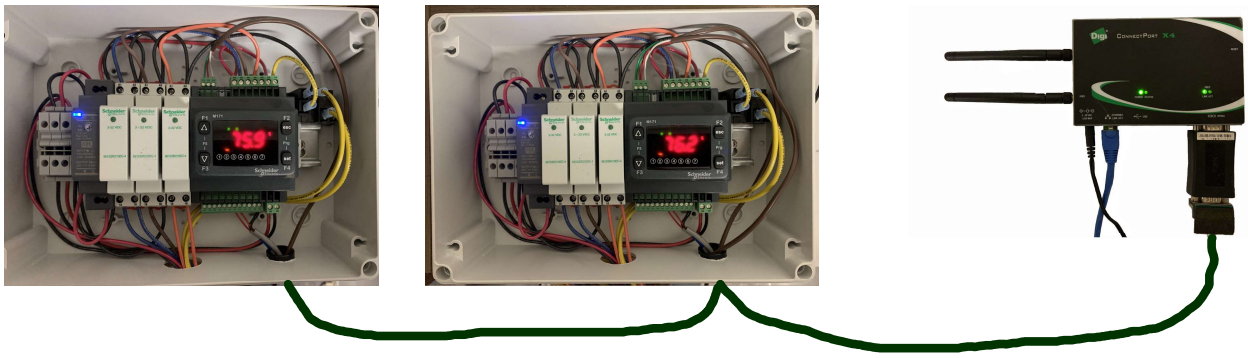

Communication Wire Connection within the ArtikControl™ Controller

The communication wire is connected into the 3-port connector at the top left side of the Controller. The wiring sequence is White (-), Red (+), and Green (GND). When you are Daisy Chaining Controllers the wiring colors should always match Green with Green, Red with Red, and White with White.

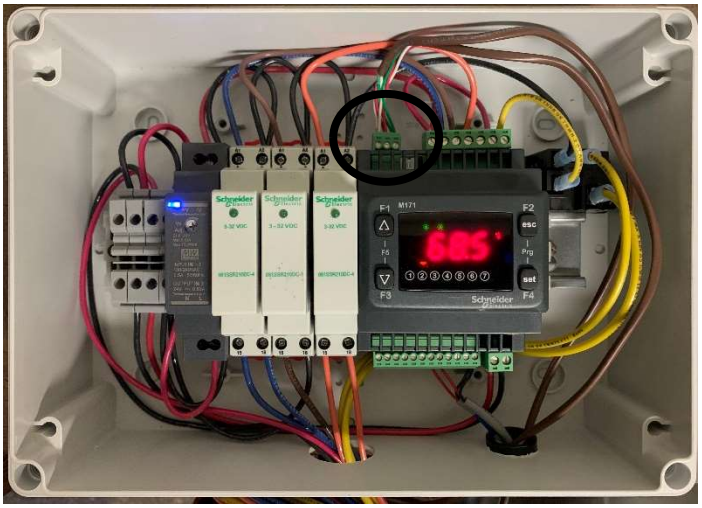

As far as color orientation, as long as the (+) and (-) connection are switched going from the controller to the Interface you are fine.

Installing DIGI XBee Adapter.

1. Find a suitable location above the Freezer/Cooler where the DIGI XBee Adapter can be mounted. Remembering you have to get the control and power lines to the adapter.
2. Drill a hole (@ 3/8) through the ceiling of the Box in the location of the Artik Controller.
3. Use the 3-conductor wire provided for the Control lines plus the power line for the DIGI XBee Adapter.
4. Remove the Receptacle power end of the power line for the DIGI XBee Adapater.
5. Install the power plug into the DIGI XBee Adapter.
6. Install the 3-conductor wire onto the DIGI XBee Adapter. You will have a '+', '- ', and a GND.
7. Install the wires as indicated on **Diagram 2**. Making sure the '+' and '-'wires are in the correct orientation.
8. Make sure all the DIP Switches are in the UP position (Going away from Connector)
9. Connect the Power wires into the power convertor. Making sure you have the correct polarity on the wires.
10. ** Multiple controllers can be hooked into the same Xbee Adapter just make sure the control wires are the correct orientation. Also, that each Controller has a different ID.
11. Caulk around the wires on both the topside and bottom of the hole which you drilled.

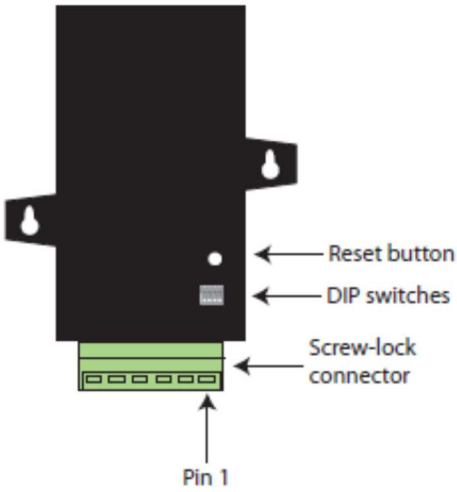

Power Converter (When Used)

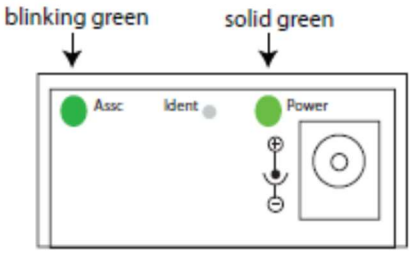

ARTIK CONTROL™ WIC/WIF

Installing Digi X2 Gateway

1. Connect one end of the Ethernet Cable to your Gateway and the other end to a Live Ethernet Jack.
2. Connect the Power Supply
3. Startup Sequence after Power is supplied.

a. The **Power** LED turns solid green.

b. The **XBee** LED turns blinking green when XBee Gateway creates a ZigBee network.

c. The **Network** LED gradually turns solid green when XBee Gateway connects to Remote Manager.

d. For the Cellular model, the **Signal Strength** LED turns either yellow or green, depending on the cellular signal strength.

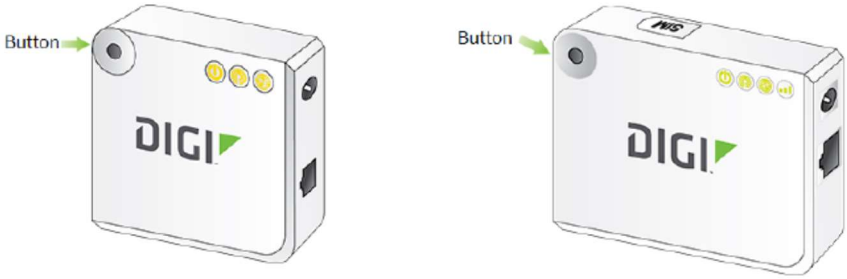

XBee Gateway Ethernet and Wi-Fi models

XBee Gateway Cellular model

Verify your components

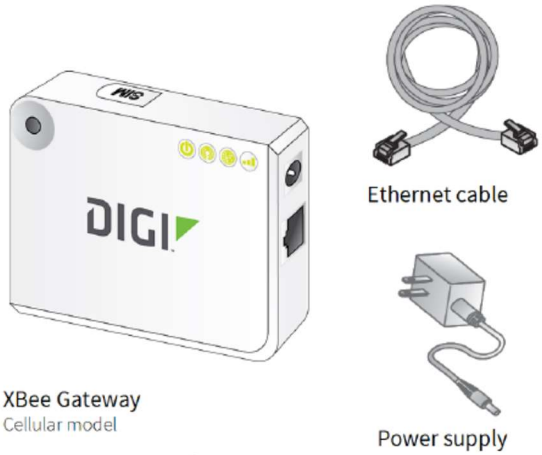

Diagram 1
ArtikControl™ WIF Freezer Controller Wiring Overview

Black Wire – Power – L1
Red Wire – Power – L2

Blue Wire – Liquid Line Solenoid – (15) Out
Blue Wire – Liquid Line Solenoid – (18) In

Brown Wire – Fan Motor Speed Control

Orange Wire – Fan Motor Power – (15) Out
Orange Wire – Fan Motor Power – (18) In

Yellow Wire – Defrost Control – Power In

Yellow Wire – Defrost Control – Power Out

Diagram 2
Wireless Interface Module Wiring

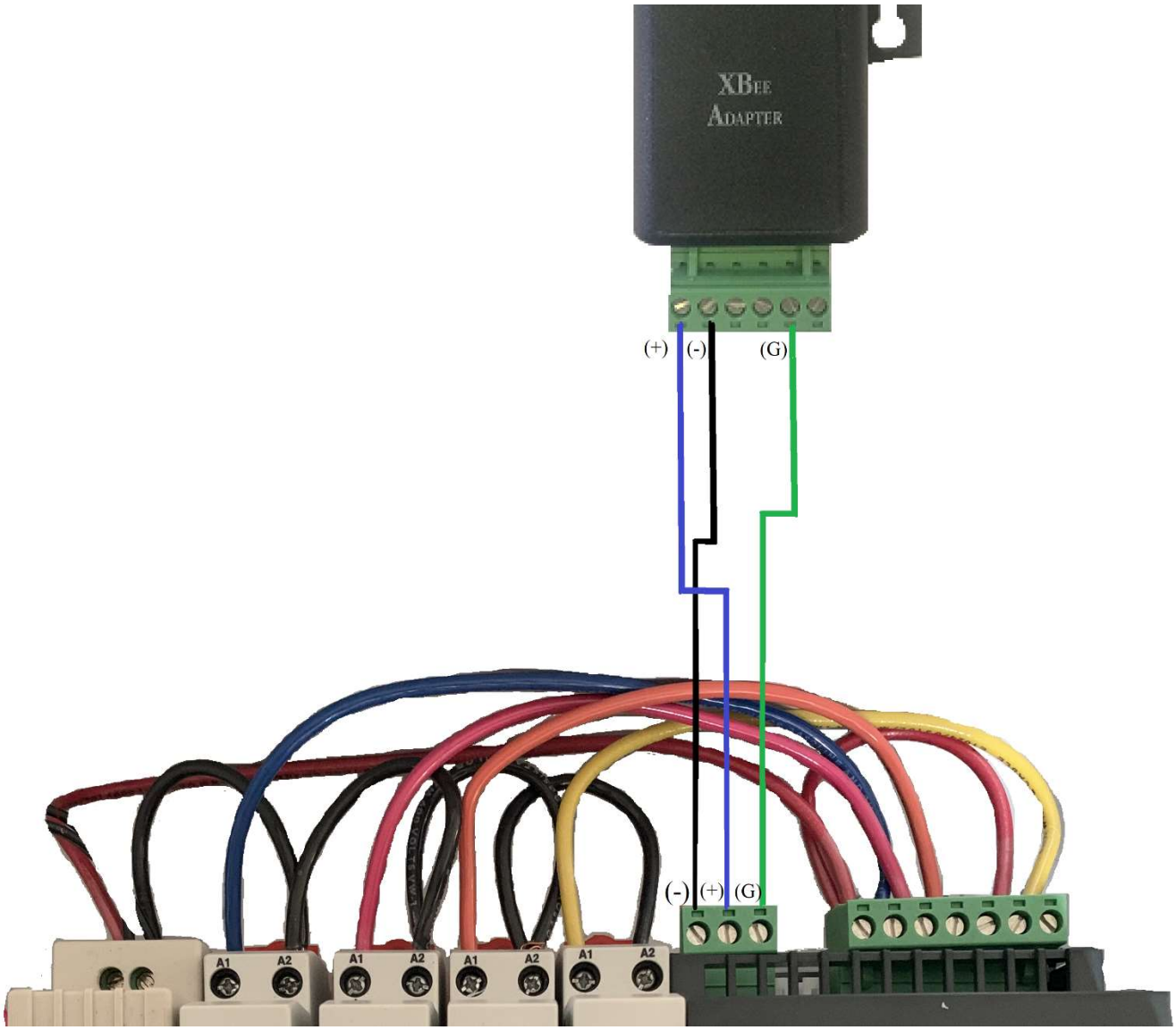

Diagram 3
Freezer Pre-Controller Installation Wiring

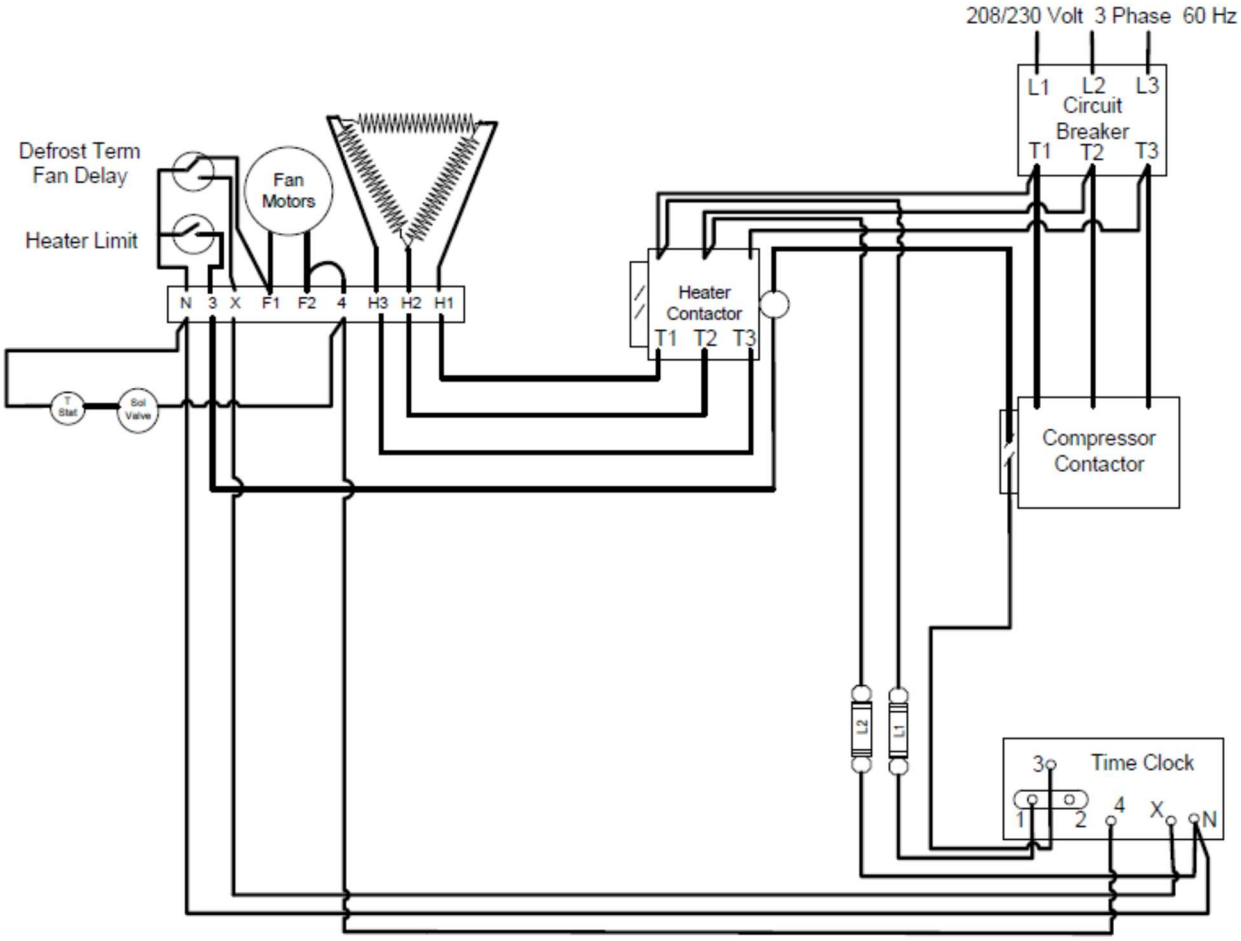

Diagram 4
Cooler Pre-Installation Wiring Diagram

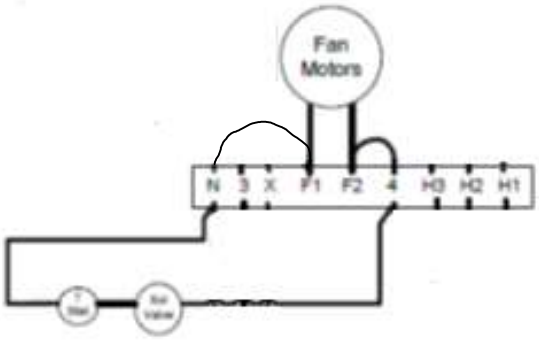

Diagram 5
Coil Thermistor Placement

Coil Thermistor Placement into the Evaporator Coil is important because incorrect placement can cause the Evaporator to not fully defrost resulting in increased ICE build-up on the Coil. In addition to correct placement, care must be taken to not insert the Thermistor so that it encounters the Heating Element as this will result in the reduced life of the Thermistor. It is always a good work practice to place the Coil Thermistor into the Fins at a 45-degree angle. This will allow the water from the defrost cycle to flow down the Thermistor rather than staying on the Thermistor.

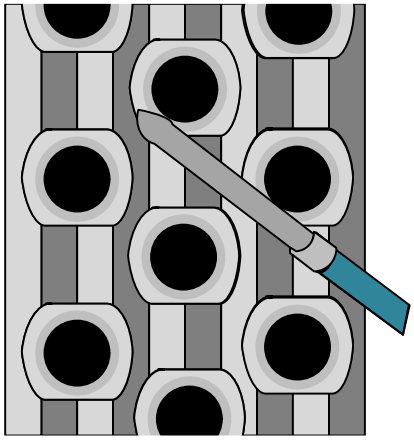

Correct Placement

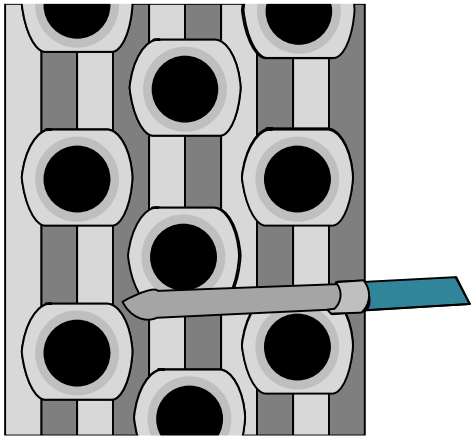

Incorrect Placement

Proper Location for Coil Thermistor on the Backside of the Evaporator Coil.

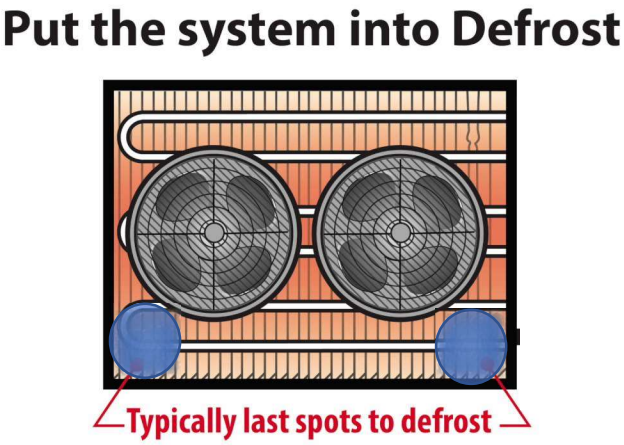

EC Motors

Yellow Label – 208 Volt EC Motor

White Label – 120 Volt EC Motor

Start up

During start up, current is slowly applied to the motor windings. This provides for a controlled, smooth start up. After about 15 seconds the motors will be running at approximately 300 RPM and then increase up to full speed. It may take up to 5 seconds before the motor has sustained rotation in the correct direction: during this time the motor may rock (rotate in each direction), rotate partially, or do nothing at all. This is normal.

Stall Detect (Locked Rotor Protection)

The Stall Detect feature protects the EC Motor from external obstructions in the event it does not achieve 300 RPM in 15 seconds of applied voltage or if the RPM drops below 500 RPM during operation.

If the motor fails to achieve 300 RPM it will automatically shut down and restart itself. Each time the motor shuts down and restarts itself, there is an increase in the delay between restarting until it reaches it maximum delay of 15 seconds. If the EC Motor still hasn't reached 300 RPM after the max delay of 15 seconds has been reached, it will continue indefinitely trying to restart until the situation has been resolved. This start-stop operation will not cause damage to the motor or the case power source since it draws minimal current during the motor start up process.

If you continue to experience a Stall Detect situation with the EC Motor, you will need to determine what is obstructing the motor.

Two Speed EC Motor Power Connections

EC Motors electrical power connectors: The power wires are NOT polarity sensitive.

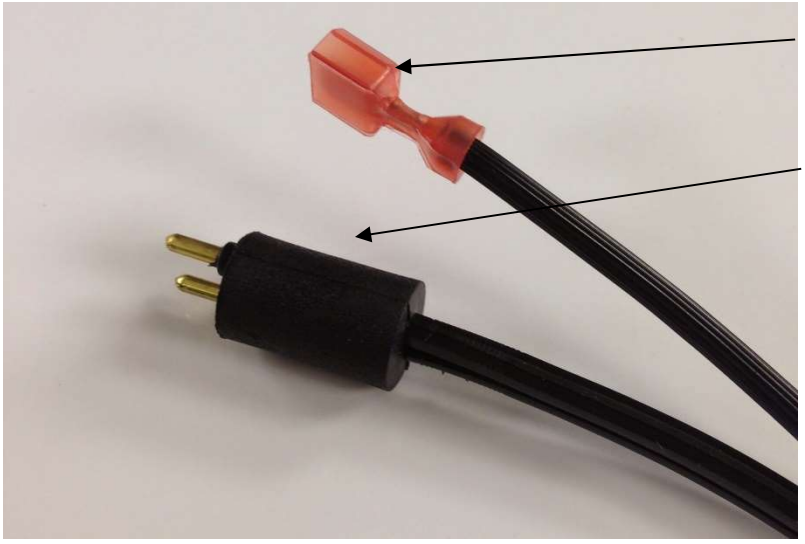

ArtikControl™ Controller

Operation and Programming Manual

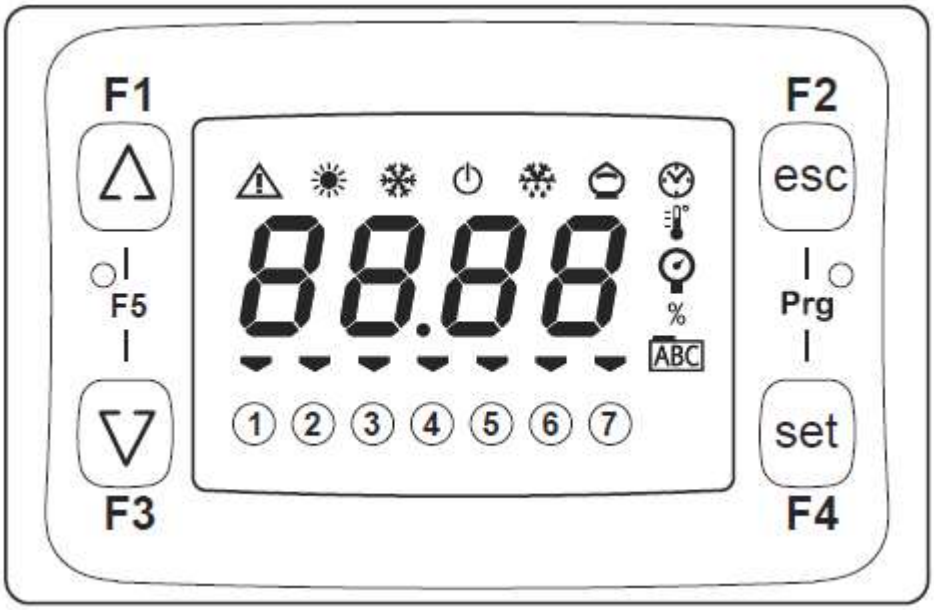

Physical Description

The following illustration presents a TM171OD14R / TM171ODM14R controller:

Number	Description
1	100…240 Vac power supply connector with removable terminal block
2	Input/output connector with removable terminal block
3	Clip-on lock for 35-mm (1.38 in.) Top hat section rail (DIN rail). For more details, refer to Installation
4	TTL programming port
5	RS-485 serial port (1)
6	LAN expansion bus port
7	Digital output connector with removable terminal block
8	User interface
(1) Only for TM171O•M•••.	

Connectors Description

Top view:

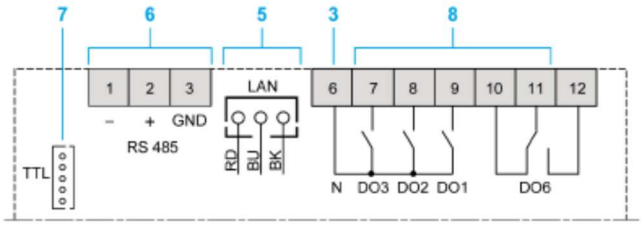

Bottom view:

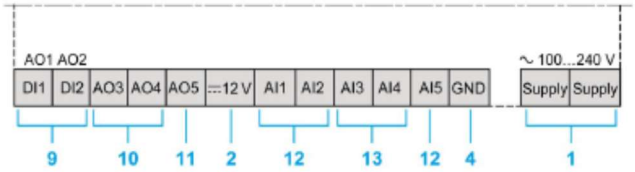

Number	Description	
1	100...240 Vac isolated power supply	
2	12 Vdc auxiliary supply, 70 mA maximum	
3	N: Common for digital output	
4	GND: Ground	
5	LAN expansion bus port	
6	RS-485 serial port (2)	
7	TTL programming port	
8	DO1...DO3, DO6	High voltage relay digital output
9	Configurable as: • AO1, AO2 • DI1, DI2	Configurable as: • Low voltage (SELV) analog output: Open Collector PWM/PPM • Dry contact digital input
10	AO3, AO4	Low voltage (SELV) analog outputs: • 0...10 Vdc
11	AO5	Low voltage (SELV) analog outputs configurable as: • 0...20 mA • 4...20 mA
12	AI1, AI2, AI5	Configurable as: • NTC analog input • Pt1000 analog input (1) • Dry contact digital input
13	AI3, AI4	Configurable as: • NTC analog input • 0...20 mA or 4...20 mA current analog input • 0...1 Vdc, 0...5 Vdc, or 0...10 Vdc voltage analog input • Dry contact digital input

(1) If any input AI1, AI2, AI5 is set as Pt1000, then all three AIs are set by hardware as Pt1000. Nevertheless, these inputs can still be configured as "Not connected" or "Digital input" by software using parameters
(2) Only for TM171O•M•••.

Keys

The following indications refer to the TM171OD•••• / TM171OF•22R / TM171DLED user interface.

Description of keys actions

Key	Press once (press and release)	Long press (press and hold for 3 seconds)(1)
UP	• Increase a value • Go to next label	Function F1
DOWN	• Decrease a value • Go to previous label	Function F3
esc (escape)	• Exit without saving modified settings • Go back to previous level	Function F2
set	• Confirm value / exit and save modified settings • Move to next level (open folder, subfolder, parameter, value) • Open state menu	Function F4
[UP + DOWN]	From the main menu, switch from the BIOS menu to the main display of the IEC Application menu (if present). For more details, refer to SoMachine HVAC software Quick Start	
[set+esc]	Open programming menu	
(1) The long press duration is configurable with the UI26 parameter		

First Power On

When the M171O / TM171DLED is powered on for the first time, a lamp test is carried out to check its state and operation.
The lamp test continues for a few seconds. During this time, all LEDs and digits flash at the same time.

LEDs description	Icons	Description
LED states and Operating Modes:		Alarm
		Power
		Compressor
		Not Used
		Defrost
		Slow Speed

Indicates the Controller has received an input error.

Indicates the Controller has Power

Indicates Compressor has been activated

Indicates Defrost Cycle has been activated.

Indicates Fans are Operating in the Slow Speed Mode.

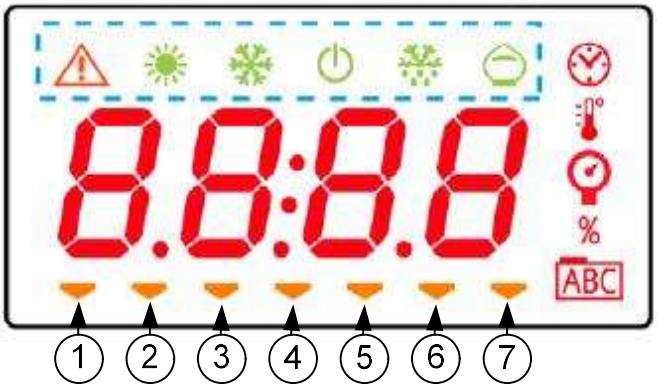

1 Cooler 115V A/C – Temp, Fans

2 Freezer 230V A/C – Temp, Fans, Defrost, Heaters, Smart Defrost

Main Menus

Access to Folders - Menu Structure

Access to folders is organized into menus.

There are 2 main menus:

Menu	Description	Access from main menu
States menu	The States menu permits to: • Display inputs/outputs • Display and modify the Clock of the controller • Manage the alarms	Press the **set** key
Programming menu	The Programming menu permits to: • Modify device parameter • Upload/download parameters with TM171AMFK • Enter a password visibility	Press the **set** key and the **esc** key simultaneously

Default Values in the ArtikControl™ Controller.

ArtikControl™ Controller Programming Guide					
			Freezer	Cooler	
		- BS -			
SP	Set Point	-50 to +90	0	38	
dFr	Manual Defrost	ON or OFF			
AU-2	Aux 2 Temperature Display				
AU-1	Aux 1 Temperature Display				
Coil	Coil Temperature Display				
SPAC	Air Temperature Display				
HSt	Hysteresis Primary (Dead Band)	.5 to 10.0			
		Par			
		- AS -			
type	Controller Type	1 or 2	2	1	
CF32	Modbus Parity	1 - 3	1	1	
CF31	Modbus Baud	0 - 3	3	3	
CF30	Modbus Address***	1 - 255	1	2	
AdEL	Door Open Sensor	1 - 10	5	5	
FdEL	Post Defrost Fan Delay	1 - 60	10		
dSPd	Defrost Fan Speed	0 - 100		100	%
dt	Defrost Termination Temperature	0 - 120	75		
dtEm	Defrost Temp Termination	ON or OFF	ON		
ddUr	Defrost Duration	5 - 180	45		
Mrt	Compressor Min Run Time	0 - 15	5	5	
Mot	Compressor Min Off Time	0 - 15	5	5	
diff	Intermediate Dead Band	10 - 90	60		%
HSPd	Fan High Speed	0 - 100	85	85	%
LSPd	Fan Low Speed	0 - 100	40	40	%
LdEL	Low Speed Delay after LLS	10 - 240	30	30	
OFF4	Temperature Offset Aux 2	-12 to +12			
OFF3	Temperature Offset Aux 1	-12 to +12			
OFF2	Temperature Offset Coil	-12 to +12			
OFF1	Temperature Offset Air	-12 to +12			

*** Modbus Address (CF30) is used for Wireless Communications with Digi Gateway. Typically, the Freezer should be set at **1** and a Cooler set at **2**. Note when you have multiple Freezers and Coolers operating through the same Gateway each ArtikControl™ Controller needs to have its own Modbus Address (CF30). If you have four (4) ArtikControl™ Controllers utilizing one Digi Gateway for communications, you should have each controller assigned a number 1-4 in the Modbus Address (CF30) option.

Areas Highlighted in Yellow should not be Adjusted.

Programming Steps

The settings as indicated above are the default settings. To make any adjustments to either the Main Menu or the Program Menu follow the instructions below.

Accessing the Main Menu:

Press the set F4 button for 3 seconds. Gets you into -BS – (Basic Programming). Pressing either the F1 △ or ▽ F3 will allow you to scroll through the Menu. Your Options are;

SP	Set Point
dFr	Manual Defrost
AU-2	Aux 2 Temperature Display
AU-1	Aux 1 Temperature Display
Coil	Coil Temperature Display
SPAC	Air Temperature Display
HSt	Hysteresis Primary (Dead Band)

Too view a set point, scroll to the Menu Option you want and press the set F4 button. This will display the current reading in that Option. To adjust the set point of that option press either the F1 △ or ▽ F3 to adjust the setting. To put the newly set point into the controller press the set F4 button. To exit out without saving a value, press the F2 esc button.

Accessing Deep Program Menu:

Press the F2 esc and set F4 buttons together esc set, this will bring up PAr, press the set F4 button to access the Options area. Pressing either the F1 △ or ▽ F3 will allow you to scroll through the Menu. Your Options are;

- AS - (Advanced Controller Settings)

type	Controller Type
CF32	Modbus Parity
CF31	Modbus Baud
CF30	Modbus Address***
AdEL	Door Open Sensor
FdEL	Post Defrost Fan Delay
dSPd	Defrost Fan Speed
dt	Defrost Termination Temperature
dtEm	Defrost Temp Termination
ddUr	Defrost Duration
Mrt	Compressor Min Run Time
Mot	Compressor Min Off Time
diff	Intermediate Dead Band
HSPd	Fan High Speed
LSPd	Fan Low Speed
LdEL	Low Speed Delay after LLS
OFF4	Temperature Offset Aux 2
OFF3	Temperature Offset Aux 1
OFF2	Temperature Offset Coil
OFF1	Temperature Offset Air

Too view a setting, scroll to the Menu Option you want and press the set F4 button. This will display the current Options in this Program. Use the F1 △ or ▽ F3 to select the option you want. To view the value in that option, press the set F4 button. To adjust the set point of that option press either the F1 △ or ▽ F3 to adjust the setting. To put the newly set point into the controller press the set F4 button. To exit out without saving a value, press the F2 esc button.

Once you have made all the changes to the Program Set Points that you want, cycle the power to lock the new values into the ArtikControl™ Controller. This only applies to Advanced Settings.

Trouble Shooting Guide

Input Error – Error or Faults	Possible Sensor Open or Not connected
Fans not running –	Check to make sure 24 Volts DC is going from DO3 to Relay Check to make sure Voltage is coming into (15) on the Fan Motor Relay. If DO3 is Activated then (18) should have Fan Motor Voltage come out.
Fans not going to Slow Speed –	Check to Make sure 24 Volts DC coming from DO2 Check to make sure there is 115 Volts A/C on (15) of the Relay. If 24 Volts DC is applied to DO2 then you should have 115 Volts A/C on (18) of Relay Open Connection on the Motors going to the RED Speed Control Wire Check Voltage on DO1 should be 24 Volts DC, which indicates Liquid Line Solenoid is closed. Check Controller Program; 'Set-Point Primary' in the Menu. Check t-1 to make sure 't-1' equals or is less than 'Set-Point Primary'. If 't-1' is greater than 'Set Point Primary' system will not initiate slow speed for fans.
System not going into Defrost –	Check to Make sure 24 Volts DC is at DO4 Check to see if there is voltage on (15) of the Defrost Relay, if Control side of Relay has 24 Volts DC then (18) should have voltage going out.

Controller Test Voltages

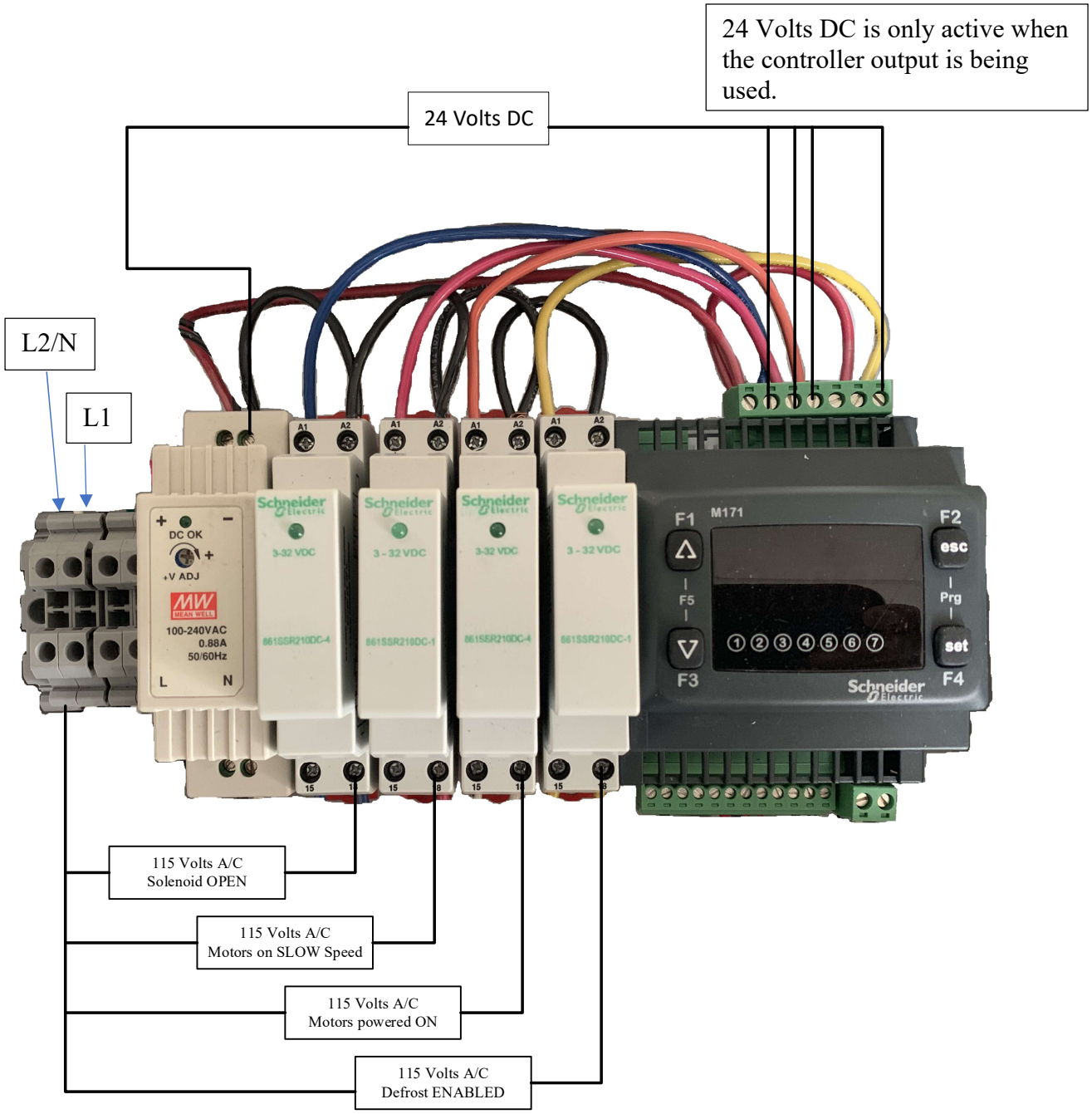

Controller Output Continuity Test

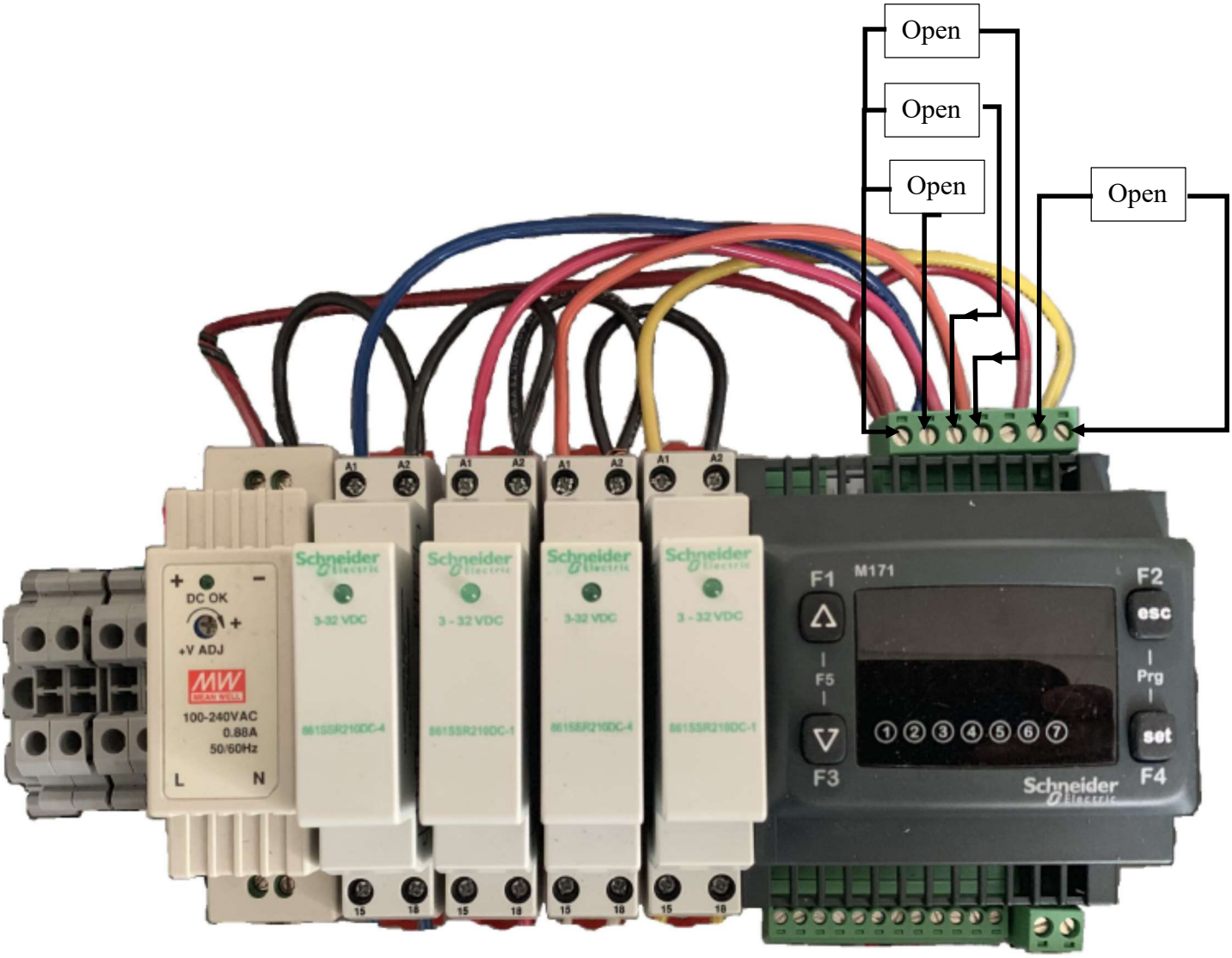

If any of the above measurements are reading **0 ohms**, this would indicate that the output relay of the Controller has been shorted.

If while the Controller is powered up, if an Output is showing 0 Volts DC when it is being called for this would typically indicate that the Output has been OPENED. If the AC/DC power converter on the left-hand side is working correctly.

Both above situations would require the Controller to be replaced.

Temperature Sensor – Ohms Resistance Chart

The **PreCon** sensor has a dissipation constant in still air at 25°C of 2.7 mW/°C. The heat dissipation constant is an expression in milliwatts of the power required to raise the temperature of a thermistor 1°C above the ambient.

	PreCon TYPE II				PreCon TYPE III	PreCon TYPE IV
	Model 21 2,252 ohm at 77°F ±0.36°F from 32°F to 158°F	**Model 22** 3,000 ohm at 77°F ±0.36°F from 32°F to 158°F	**Model 24** 10,000 ohm at 77°F ±0.36°F from 32°F to 158°F	**Model 27** 100,000 ohm at 77°F ±0.36°F at 77°F ±1.3°F from 32° to 158°F	**Model 3** 10,000 ohm at 77°F ±0.36°F from 32°F to 158°F	**Model 42** 20,000 ohm at 77°F ±0.36°F from 32°F to 158°F
TEMP°F	RESISTANCE	RESISTANCE	RESISTANCE	RESISTANCE	RESISTANCE	RESISTANCE
-35	63.08K	84.09K	280.1K	2801K	203.6K	
-30	52.72K	70.27K	234.1K	2341K	173.6K	
-25	44.20K	58.92K	196.3K	1963K	148.3K	
-20	37.19K	49.56K	165.1K	1651K	127.1K	
-15	31.38K	41.83K	139.3K	1393K	109.2K	
-10	26.57K	35.41K	118.0K	1180K	94.07K	270.6K
-5	22.57K	30.07K	100.2K	1002K	81.23K	228.0K
0	19.22K	25.61K	85.35K	853.5K	70.32K	192.6K
5	16.42K	21.88K	72.91K	729.1K	61.02K	163.1K
10	14.07K	18.74K	62.48K	624.8K	53.07K	138.7K
15	12.08K	16.10K	53.64K	536.4K	46.27K	118.3K
20	10.41K	13.87K	46.23K	462.3K	40.42K	101.0K
25	8988	11.98K	39.91K	399.1K	35.39K	86.60K
30	7782	10.37K	34.56K	345.6K	31.06K	74.40K
35	6755	8999	30.00K	300.0K	27.31K	64.10K
40	5877	7830	26.10K	261.0K	24.06K	55.30K
45	5126	6830	22.76K	227.6K	21.24K	47.89K
50	4482	5971	19.90K	199.0K	18.79K	41.40K
55	3927	5231	17.44K	174.4K	16.65K	36.10K
60	3448	4594	15.31K	153.1K	14.78K	31.44K
65	3035	4043	13.48K	134.8K	13.15K	27.46K
70	2676	3565	11.88K	118.8K	11.72K	24.02K
75	2365	3150	10.50K	105.0K	10.46K	21.06K
80	2094	2789	9298	92.98K	9354	18.50K
85	1858	2475	8250	82.50K	8378	16.29K
90	1651	2200	7331	73.31K	7516	14.37K
95	1471	1959	6532	65.32K	6754	12.69K
100	1312	1748	5826	58.26K	6078	11.24K
105	1173	1562	5209	52.09K	5479	9.97K
110	1050	1399	4663	46.63K	4947	8.86K
115	941.8	1254	4182	41.82K	4472	7.88K
120	846.0	1127	3757	37.57K	4049	7.03K
125	761.3	1014	3381	33.81K	3671	6.27K
130	686.1	913.9	3047	30.47K	3333	5.61K
135	619.4	825.0	2750	27.50K	3031	5.03K
140	559.9	745.9	2486	24.86K	2759	4.51K
145	507.0	675.4	2251	22.51K	2515	4.06K
150	459.7	612.4	2041	20.41K	2296	3.65K
155	417.5	556.2	1854	18.54K	2098	3.29K
160	379.6	505.8	1686	16.86K	1920	2.97K
165	345.7	460.7	1535	15.35K	1759	2.69K
170	315.2	420.1	1400	14.00K	1614	2.43K
175	287.8	383.7	1278	12.78K	1482	2.20K
180	263.1	350.8	1168	11.68K	1362	2.00K
185	240.9	321.2	1070	10.70K	1254	1.82K
190	220.8	294.5	980.5	9805	1156	1.65K
195	202.6	270.3	899.6	8996	1066	1.51K
200	186.2	248.4	826.8	8268	984.0	1.38K
205	171.3	228.5	760.7	7607	909.8	1.26K
210	157.8	210.5	700.7	7007	841.9	1.15K
215	145.5	194.1	646.1	6461	779.8	1.05K
220	134.3	179.2	596.4	5964	723.0	967.5
225	124.2	165.6	551.5	5515	671.0	888.4
230	114.9	153.2	510.2	5102	623.3	816.6
235	106.4	141.9	472.5	4725	579.5	
240	98.7	131.5	438.3	4383	539.4	

User Interface (UI) Operation

The User Interface (UI) is an Option which can be chosen through ArtikControl™, it allows for remote access and interface to the controller. The client can remotely monitor the Walk-in Freezers and Coolers to make sure they are operating correctly. It allows for downloading of the Units Temperatures to assist with HACCP regulations.

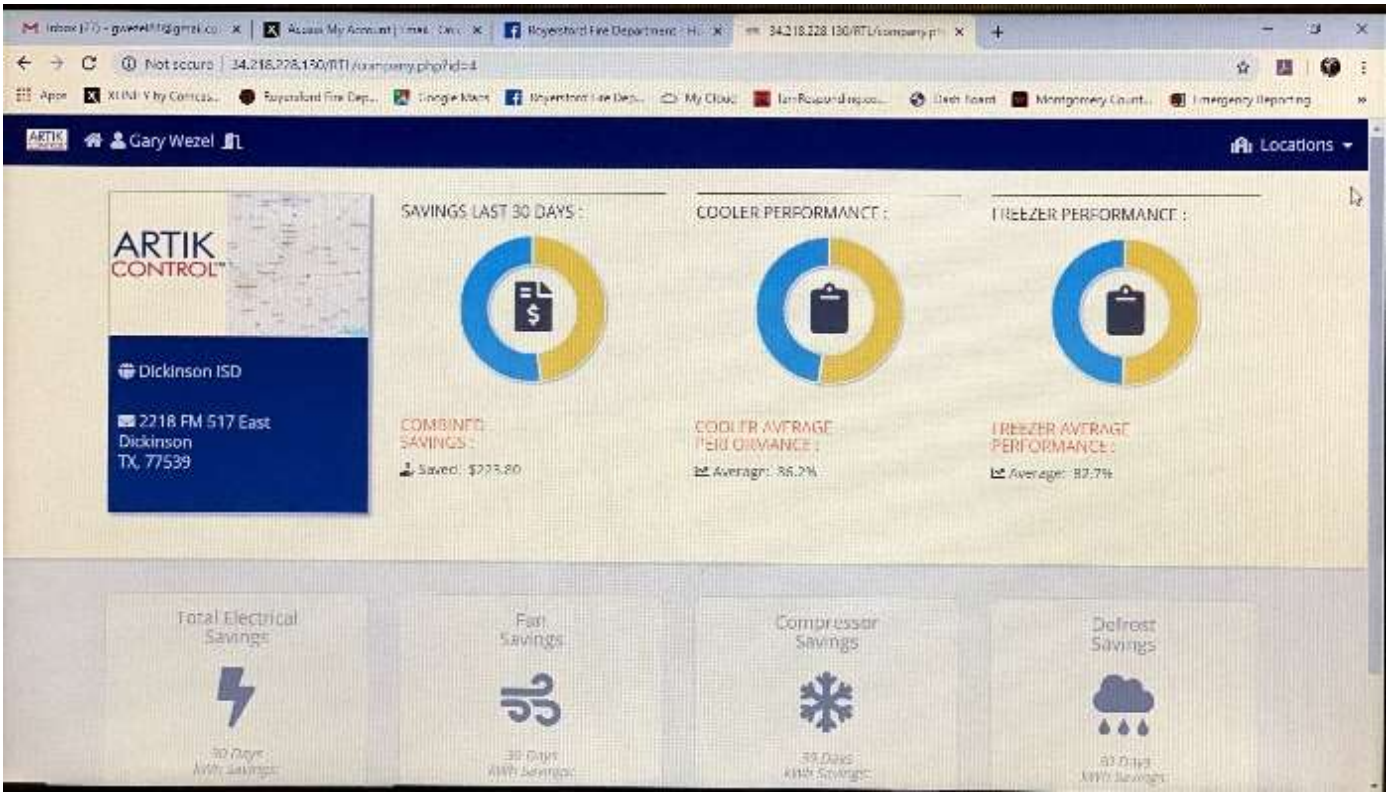

The Primary Home Page shows the Energy Saving for the Walk-in Coolers and Freezers. You have access from this page to pick a location.

The UI allows for a visual representation of the Walk-in Cooler or Freezer. As indicated by the Tiles it shows the Box Temperature, Coil Temperature, Fans on High or Low, if the LLS is open.

Under the History button is where you can view the past Temperature History of the Unit and download the information for your records.

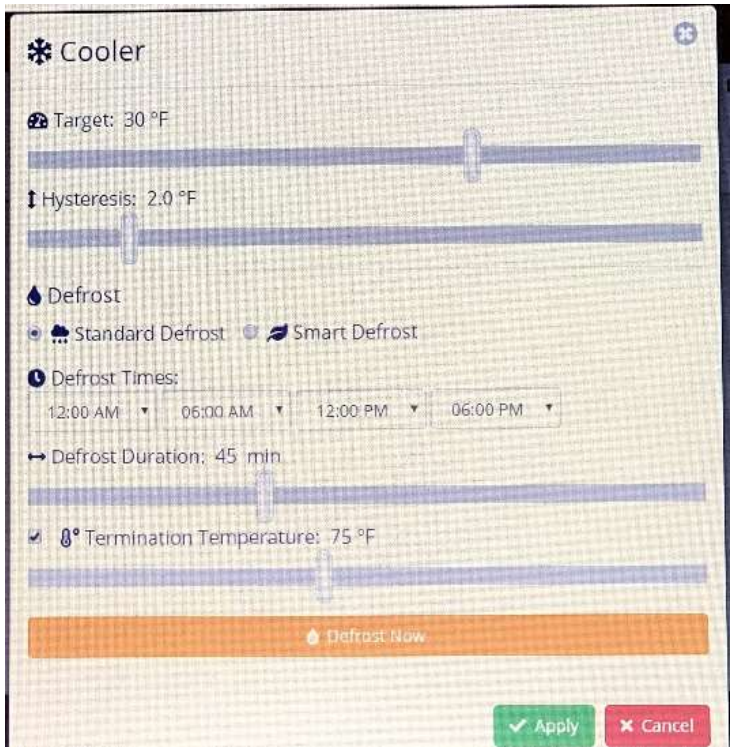

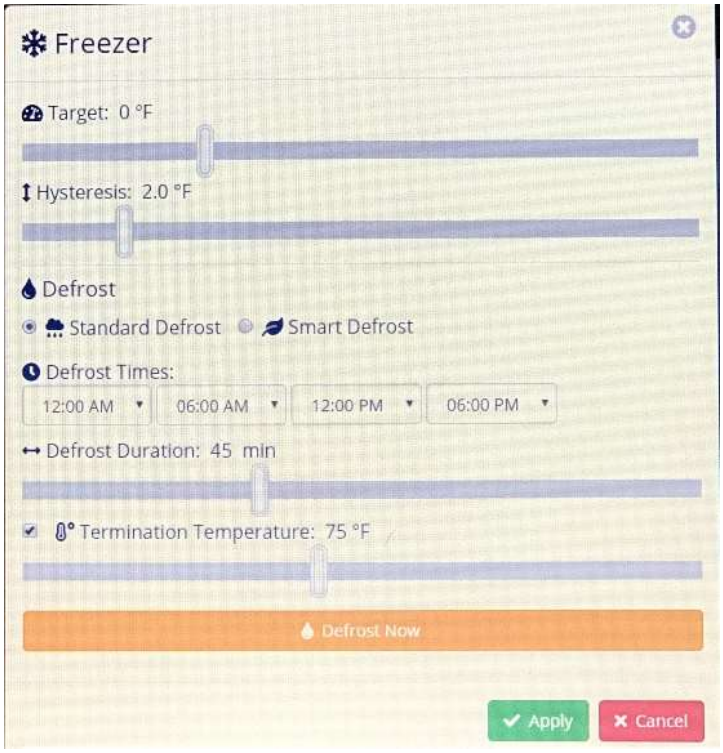

The Tiles Represent the Settings. In the Settings you can adjust the Target Temperature, Hysteresis, Defrost Application, Defrost Times, Defrost Time Termination and Temperature Termination set-points.

Component Listing

Part Number	Description
Controllers	
ArtikControl-WIC	ArtikController for a Cooler
ArtikControl-WIF	ArtikController for a Freezer
Controller Components	
TM171ODM14R	Optimized Logic Controller
ST-R3SC	Air/Coil Temperature Sensor
System Connectivity	
X2E-Z3C-H2-W	X2 System Gateway – Ethernet & Cellular Connections
X4-Z11-E-A	X4 System Gateway – Ethernet Only
X4H-Z1U-L301-US	X4 System Gateway – Ethernet & Cellular
XA-Z14-CS3PH-A	Xbee Pro RS 485 Wireless Adapter
EC Motors	
5SME59BLI1240A	1/15HP, 115V, CCW-LE EC Motor – White Label
5SME59BLI2221A	1/15HP, 230V, CCW-LE EC Motor – Yellow Label
5SME59BLI1256A	1/15HP, 115V, CCW-LE Variable Speed EC Motor – White Label
5SME59BLI2283A	1/15HP, 230V, CCW-LE Variable Speed EC Motor – Yellow Label
SSC4B21DQ7220	1/47HP, 16 Watt, 115/230V, Screw Shaft, CCW-LE
SSC4B21DH7224	1/47HP, 16 Watt, 115/230 V, Screw Shaft, CW-LE

Notes

76 Robinson Street
Unit 9A
Pottstown, PA 19465

Toll Free: 888-286-3091
Phone: 610-323-6704
Cellular: 610-310-2065
Fax: 484-949-8333
www.Refrigerationtechnologiesllc.com

REVISED: June 2020
Rev 21
Copyright © 2020 Refrigeration Technologies LLC
All rights reserved.

Need Additional Help?

Customer Service:
Steve Wezel
Phone:610-310-2065

E-Mail: Steve@refrigerationtechnologiesllc.com

www.Refrigerationtechnologiesllc.com

Product Catalog

Packaged Rooftop Air Conditioners Precedent™ Heat Pump

High Efficiency

12.5 to 25 Tons — 60 Hz

July 2023

PKGP-PRC021C-EN

Introduction

Packaged Heat Pumps

Trane's customers demand products that provide exceptional reliability, meet stringent performance requirements, and are competitively priced. Trane delivers with Precedent™.

Precedent™ features cutting edge technologies: reliable compressors, Trane engineered Symbio controls, computer-aided run testing, and Integrated Comfort™ Systems. So, whether you're the contractor, the engineer, or the owner you can be certain Precedent™ products are built to meet your needs.

The Precedent product is designed for comfort cooling, mixed air applications. If the product is being considered for other types of applications, such as process cooling, dedicated outdoor air, indoor agriculture, etc. Consult with your local Trane Sales Representative. Applying the units in an unintended application could result in inadequate performance and/or premature component failures.

Through the years, Trane has designed and developed the most complete line of Packaged Rooftop products available in the market today. Trane was the first to introduce the Micro—microelectronic unit controls—and has continued to improve and revolutionize this design concept.

Symbio control platform offers the same great features and functionality as the original Micro, with additional benefits for greater application flexibility.

With its sleek, compact cabinet, Precedent™ continues to provide the highest standards in quality and reliability, comfort, ease of service, and the performance of Trane light commercial products.

Copyright

This document and the information in it are the property of Trane, and may not be used or reproduced in whole or in part without written permission. Trane reserves the right to revise this publication at any time, and to make changes to its content without obligation to notify any person of such revision or change.

Trademarks

All trademarks referenced in this document are the trademarks of their respective owners.

Revision History

- Added modulating gas heat (10:1) option. Changes include the following:
  - Updated Digit 10 — Heat Type in Model Number Description chapter.
  - Updated General data tables.
  - Updated Table 39 (Static pressure drop through accessories (inches water column) - high efficiency- auxiliary heater) and added Modulating gas heat option table in Fan Performance chapter.
  - Updated Table 40 title from Gas fired heating capacities - dual fuel standard efficiency to Gas-fired heating capacities - staged gas - dual fuel high efficiency and added Table 41 Gas-fired heating capacities - modulating gas - dual fuel high efficiency in Heating Performance chapter.
  - Updated Unit wiring, high efficiency, Electrical characteristics - indoor fan motor, Electrical characteristics - inducer motor tables in Electrical Data chapter.
  - Added Electrical characteristics - oversized indoor fan motor table and updated Unit wiring table in Electrical Data chapter.
  - Updated General topic in Mechanical Specifications chapter.
- Streamline Features and Benefits chapter tables.
- Streamline Model Number description.

Table of Contents

Features and Benefits 5
- Features 5
- Control Options 6
- Accessories 7
- Key Benefits 9

Model Number Description 16

General Data 18

Gross Cooling Capacities 22

Heating Capacities 26

Reheat Temperature Rise 29

Evaporator Fan Performance - Heat Pump 40
- 12.5 to 25 Ton Units — Downflow 40
- 12.5 to 25 Ton Units — Horizontal 43

Evaporator Fan Performance - Dual Fuel 47
- 12.5 to 25 Ton Units — Downflow 47
- 12.5 to 25 Ton Units — Horizontal 49

Fan Performance 52

Heating Performance 54

Controls 56
- Enhanced BAS Integration and Connectivity 56
- Secure Remote Connectivity with Trane Connect 56
- Serviceability 56
- Flexibility 58
- Economizer Controls 58
- Zone Sensors 59
- Air-Fi Wireless Communicating Zone Sensors 60
- Thermostats 60
- Humidity Control (HGRH) 61

Electrical Data 63

Dimensional Data 67

Weights 71

Mechanical Specifications 73
General 73
Casing 73
Coils 73
Coil Guards 73
Compressors 73
Filters 74
Frostat™ 74
Gas Heating Section 74
Tubular Gas Heat Exchanger 74
Indoor Fan 74
Powered or Unpowered Convenience Outlet 74
Stainless Steel Drain Pan 74
Stainless Steel Heat Exchanger 75
Through-the-Base Electrical with Circuit Breaker 75
Through-the-Base Electrical with Disconnect Switch 75
Economizer (Standard) 75
Manual Outside Air Damper 75
Motorized Outside Air Damper 75
Powered Exhaust 75
Roof Curb 75
Ventilation Override Operation 76

Features and Benefits

Features

Note: *Equipment feature availability is dependent on unit configuration. For more information, see Packaged Rooftop Air Conditioners Precedent™ Quick Reference Support Guide (PREC-PRC001*-EN), the ordering system, or contact product support.*

Table 1. Features – standard and optional

	Standard Features	Options		
		Factory Installed	Factory or Field Installed	Field Installed
3-year Limited Parts Warranty	X			
5-year Limited Compressor Warranty	X			
10-year Limited Heat Exchanger Warranty		X		
15-year Limited Warranty Stainless Steel Heat Exchanger		X		
2 inch Filter	X			
2 inch MERV 8 Filters		X		
2 inch MERV 13 Filters		X		
Access Doors		X		
Access Door (Control Box)	X			
Access Panels	X			
Anti-Short Cycle Timer (Standard with Symbio)	X			
Barometric Relief			X	
CO_2 Sensor				X
Clogged Filter Switch			X	
Coil guards	X			
CompleteCoat™ Condenser Coil		X		
Condensate Overflow Switch			X	
Convertible Airflow	X			
Colored and Numbered Wiring	X			
Crankcase Heaters	X			
Direct Drive Plenum Fan	X			
Discharge Air Temperature Sensing Kit — MZVAV, SZVAV, Economizer, HGRH, Mod Gas	X			
Discharge Air Temperature Sensing Kit — Standard (Multispeed)	X			
Economizer: Low Leak — Downflow			X	
Economizer: Low Leak — Horizontal				X
Economizer: Standard — Downflow			X	
Economizer: Standard — Horizontal				X
Electric Heater			X	
Expansion Modules			X	
Fault Detection and Diagnostics (FDD)	X			
Filter Removal Tool	X			
Foil-Faced and Edge Protected Insulation	X			
Frostat™	X			
High Pressure Control	X			
High Altitude Kit				X
High Static/Oversized Motor		X		
High Temperature Sensor				X
IAQ Dual Sloped Composite Drain Pan	X			
Liquid Line Refrigerant Drier	X			

Table 1. Features – standard and optional (continued)

	Standard Features	Options		
		Factory Installed	Factory or Field Installed	Field Installed
Low Ambient Cooling to 0°F			X	
Low Ambient Cooling to 40°F	X			
Low Pressure Control	X			
LP Conversion Kit				X
Manual Outside Air Damper			X	
Modulating Gas Heat (10:1)		X		
Modulating Hot Gas Reheat (HGRH)		X		
Motorized Outside Air Damper			X	
Multispeed Direct Drive Motors	X			
Operating Charge of R-410A	X			
Phase Balance/Loss/Reversal Protection	X			
Phase Monitor	X			
Powered Exhaust				X
Powered or Unpowered Convenience Outlet		X		
Reference or Comparative Enthalpy			X	
Roof Curb				X
Single Point Power	X			
Single Side Service	X			
Smoke Detector - Return		X		
Smoke Detector - Supply		X		
Stainless Steel Drain Pan		X		
Standardized Components	X			
Symbio Controls	X			
Thermal Expansion Valve	X			
Through-the-Base Electrical Access		X		
Through-the-Base Electrical with Circuit Breaker		X		
Through-the-Base Electrical with Disconnect Switch		X		
Through-the-Base Gas Piping		X		
Tubular Gas Heat Exchanger		X		
Variable Air Flow (SZVAV)/Variable Air Flow (MZVAV)		X		
Ventilation Override				X

Control Options

Note: *Control option availability is dependent on unit configuration. For more information, see Packaged Rooftop Air Conditioners Precedent™ Quick Reference Support Guide (PREC-PRC001*-EN), the ordering system, or contact product support.*

Table 2. Control options — standard and optional

	Standard Features	Options		
		Factory Installed	Factory or Field Installed	Field Installed
Dual Thermistor Remote Zone Sensor				X
Symbio Service and Installation App	X			
Symbio 700 Advanced Module			X	
Humidity Sensor/Humidistat				X

Table 2. Control options — standard and optional (continued)

	Standard Features	Options		
		Factory Installed	Factory or Field Installed	Field Installed
Thermostat				X
Wireless Zone Sensor				X
Zone Sensor				X
LonTalk® Communication Interface (LCI)			X	
Trane® Air-Fi® Wireless Communication Interface (WCI)			X	

Note: For more information, reference the Controls chapter.

Accessories

Note: *Accessory availability is dependent on unit configuration. Some accessories may require additional accessories/options for full functionality. For more information, see Packaged Rooftop Air Conditioners Precedent™ Quick Reference Support Guide (PREC-PRC001*-EN), the ordering system, or contact product support.*

Table 3. Packaged heat pump

FIA KIT	DESCRIPTION
FIAEHWD318*	18kW, 208-230V Electric Heater
FIAEHWD336*	36kW, 208-230V Electric Heater
FIAEHWD354*	54kW, 208-230V Electric Heater
FIAEHWD372*	72kW, 208-230V Electric Heater
FIAEHWD418*	18kW, 460V Electric Heater
FIAEHWD436*	36kW, 460V Electric Heater
FIAEHWD454*	54kW, 460V Electric Heater
FIAEHWD472*	72kW, 460V Electric Heater
FIAEHWDW18*	18kW, 575V Electric Heater
FIAEHWDW36*	36kW, 575V Electric Heater
FIAEHWDW54*	54kW, 575V Electric Heater
FIAEHWDW72*	72kW, 575V Electric Heater
FIABARM003*	Barometric Relief
FIAC02K001*	CO_2 (DCV) Wall Mounted Sensor
FIAC02K002*	CO_2 (DCV) Duct Mounted Sensor
FIACURB404*	14-inch Full Perimeter Knockdown Curb
FIACLFS003*	Clogged Filter Switch
FIACLFS004*	Clogged Filter Switch (MERV13)
FIADFDB001*	Differential Dry Bulb Economizer Control
FIADMPR003*	Manual Damper
FIADMPR103*	Motorized Damper
FIAECON003*	Dry Bulb Downflow Economizer
FIAECON303*	Dry Bulb Horizonal Economizer
FIAECON103*	Dry Bulb Downflow Low Leak
FIAECON203*	Dry Bulb Horizontal Low Leak
FIAENTH001*	Reference Enthalpy Economizer Control
FIAENTH002*	Comparative Enthalpy Economizer Control
FIAHALT003*	High Altitude Gas Adjustment Kit
FIAHTST001*	High Temperature (Fire) Duct Mounted Stat

Table 3. Packaged heat pump (continued)

FIA KIT	DESCRIPTION
FIAHZDC001*	Horizontal Conversion Panel
FIALOAM001*	Low Ambient
FIALTCI001*	LonTalk Communication Interface
FIALPKT003*	LP Gas Conversion Kit
FIAOPTN001*	Indoor Options Module
FIAOPTN002*	Fresh Air Options Module
FIAOVFL001*	Condensate Overflow Switch
FIAPWRX303*	Power Exhaust 230V
FIAPWRX403*	Power Exhaust 460V
FIAPWRXW03*	Power Exhaust 575V
FIAS7ADV01*	Symbio 700 Advanced Controls and BACnet BAS Upgrade Kit
FIASCCM001*	Symbio Customer Connection Module
FIAXMOD030*	Symbio 700 XM30 Expansion Module
FIAXMOD032*	Symbio 700 XM32 Expansion Module

Table 4. Dual fuel heat pump

FIA KIT	DESCRIPTION
FIABARM003*	Barometric Relief
FIAC02K001*	CO_2 (DCV) Wall Mounted Sensor
FIAC02K002*	CO_2 (DCV) Duct Mounted Sensor
FIACURB404*	14-inch Full Perimeter Knockdown Curb
FIACLFS003*	Clogged Filter Switch
FIACLFS004*	Clogged Filter Switch (MERV13)
FIADFDB001*	Differential Dry Bulb Economizer Control
FIADMPR003*	Manual Damper
FIADMPR103*	Motorized Damper
FIAECON003*	Dry Bulb Downflow Economizer
FIAECON303*	Dry Bulb Horizonal Economizer
FIAECON103*	Dry Bulb Downflow Low Leak
FIAECON203*	Dry Bulb Horizontal Low Leak
FIAENTH001*	Reference Enthalpy Economizer Control
FIAENTH002*	Comparative Enthalpy Economizer Control
FIAHTST001*	High Temperature (Fire) Duct Mounted Stat
FIAHZDC001*	Horizontal Conversion Panel
FIALOAM001*	Low Ambient
FIALTCI001*	LonTalk Communication Interface
FIAOPTN001*	Indoor Options Module
FIAOPTN002*	Fresh Air Options Module
FIAOVFL001*	Condensate Overflow Switch
FIAHALT003*	High Altitude Gas Adjustment Kit - 2-Stage gas
FIALPKT003*	LP Gas Conversion Kit- 2-Stage gas
FIALPKTM08*	LP Gas Conversion Kit - Modulating gas
FIALPKTM09*	LP Gas Conversion Kit - Modulating gas
FIALPKTM10*	LP Gas Conversion Kit - Modulating gas
FIAPWRX303*	Power Exhaust 230V
FIAPWRX403*	Power Exhaust 460V

Table 4. Dual fuel heat pump (continued)

FIA KIT	DESCRIPTION
FIAPWRXW03*	Power Exhaust 575V
FIAS7ADV01*	Symbio 700 Advanced Controls and BACnet BAS Upgrade Kit
FIASCCM001*	Symbio Customer Connection Module
FIAXMOD030*	Symbio 700 XM30 Expansion Module
FIAXMOD032*	Symbio 700 XM32 Expansion Module

Key Benefits

Airflow Distribution

Airflow is outstanding. Precedent™ can replace an older machine with old ductwork and, in many cases, improve the comfort through better air distribution.

Cabinet Integrity

For added water integrity, Precedent™ has a raised 1 inch lip around the supply and return of the downflow units to prevent water from blowing into the ductwork.

Coil Guards

Coil guards protect condenser coil during shipping as well as hail, vandals, wind, etc. Toolless design lends itself to ease of maintenance in cleaning coils.

CO_2 Sensor — Demand Control Ventilation (DCV)

Demand-controlled ventilation (DCV) is a control strategy that responds to the actual demand (need) for ventilation by regulating the rate at which the HVAC system brings outdoor air into the building. A CO_2 sensor measures the concentration (parts per million, ppm) of CO_2 (carbon dioxide) in the air. As the CO_2 concentration changes, the outside air damper modulates to meet the current ventilation needs of the zone. The CO_2 sensor kit is available as a field installed accessory and wires directly to the Symbio 700 controller.

CompleteCoat™ Condenser Coil

This optional coated coil provides excellent corrosion resistance as well as uniformity of coverage and coating thickness.

Controls — Symbio™

Enhanced BAS Integration and Connectivity

- Open standard communications

  - BACnet®over Zigbee (Air-Fi Wireless)
  - BACnet MS/TP
  - BACnet IP
  - Modbus™ RTU
  - Modbus TCP/IP
  - LonTalk®
- Securely access, troubleshoot, and monitor equipment from anywhere via Trane Connect™

Serviceability

- Wireless mobile app interface (iPhone and Android) to simplify startup/service
- On-board user interface
- Data Trending
- Real-time, clear language diagnostics
- Historical alarm logs
- Backup and Restore functionality to reduce commissioning and service time

Flexibility

- Future-ready upgradable software, supporting changing codes and new sequences of operation
- Standard, consistent pre-engineered applications that meet industry standards
- Built-in Schedules (requires Tracer® TU)
- Expandable inputs and outputs (requires Tracer TU)
- Ability to add custom programmed sequences (requires Tracer TU)

Accessibility

Control box consists of a multilevel design with Symbio Controls located on hinged panels which provide protection from high voltage components for ease of servicing.

Convenience Outlet

This option is GFCI, 120V/15A, 2 plug, convenience outlet powered or GFCI, 120V/20A, 2 plug convenience outlet unpowered. This option can be ordered when through the base electrical with either the disconnect switch or circuit breaker option is ordered.

Convertible Units

Units ship in a downflow configuration and can be easily converted to horizontal by simply removing two panels. Optional field accessory kits required for 12.5 to 25 ton units.

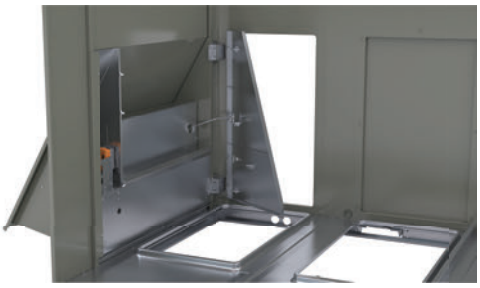

Direct Drive Plenum Fans

All 12.5 to 25 tons units are equipped with a direct drive plenum fan design with the following features.

- Backward-curved fan wheel
- External rotor direct drive variable speed indoor motor
- Variable speed adjustment available in Symbio controller
- Designed to slide out for ease of maintenance

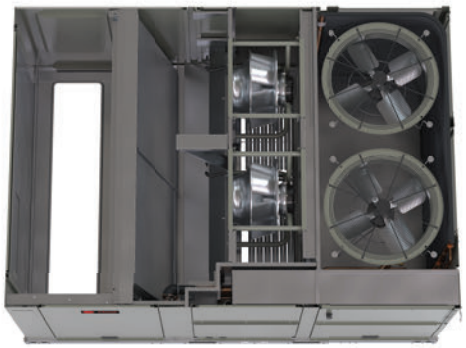

Drain Pan

Every unit has an easy-to-clean, composite removable dual-sloped drain pan (IAQ).

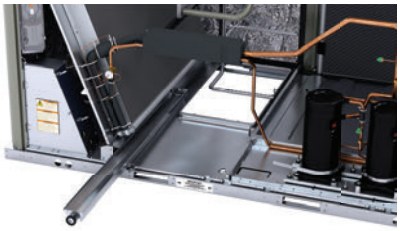

Dual Fuel Operation

For dual fuel models, heat pump with gas auxiliary heat (digit 1 = D). If the call for heat is not satisfied, the final heat pump stage is activated. If ambient temperature is below the adjustable lockout set point, the controller will activate auxiliary gas heat 1st stage, and heat pump operation will be terminated. A

continued call for heat will cause the controller to activate auxiliary gas heat 2nd stage. The indoor fan will continue to run and will increase to 100% during transition from heat pump to gas heat.

If continuous fan operation is available and selected from the thermostat, the controller automatically adjusts fan speed for heat pump and gas heat operation. During defrost mode, the controller will activate auxiliary gas heat to maintain comfort.

Fault Detection and Diagnostics (FDD)

This offering meets the mandatory requirement of CA Title 24 of fully configurable diagnostics allowing fault history and reading fault codes at the unit via Symbio™ 700 board or app. This feature provides detection of the following faults: Air temperature sensor failure/fault and notification of acceptable economizer mode. The FDD system shall be certified by the Energy Commission as meeting the requirements.

Flexibility

Precedent™ offers ultimate flexibility. Units are built to order in our standard ship cycle time.

High Altitude Kit

While recommended for units applied above 2,000 feet, domestic contractors should consult with local authority on best practice. High altitude kits contain gas orifices that derate the gas input rate (Btuh/r) by 10%.

High Efficiency Filtration

Precedent™ units offer a variety of high efficiency filtration options. MERV 8 and MERV 13 filters provide additional filtration beyond the capabilities of typical 2 inches throwaway filters.

High Static Motor

Available on 25 ton models, this high static motor option extends beyond the capability of the standard motor.

Hinged Access Doors

These doors permit easy access to the filter, fan and compressor/control sections. They reduce the potential roof damage from screws or sharp access panel corners.

Humidity Sensor/Humidistat

The humidity sensor/humidistat, when used in conjunction with our dehumidification (hot gas reheat) units will provide outstanding humidity control and comfort. Humidity sensors can be wall or duct mounted. The humidity deadband can be set between 40% and 60% relative humidity.

Low Ambient Cooling

All Precedent™ units have cooling capabilities down to 40°F. Factory installed option or field installed accessory extends operation down to 0°F.

Low Leak Economizer

This accessory meets low leak requirements for ASHRAE 90.1, IECC, and CA Title 24 standards (4 cfm/ft^2@1" wg exterior air/return air). This option allows 100% outdoor air supply from 0 to 100% modulating dampers and is standard with barometric relief. It can be paired with powered exhaust for additional building pressure relief. This option can be paired with or without fault detection and diagnostics (FDD) to meet current mandatory CA Title 24 requirements.

The economizers come with four control options, dry bulb, reference enthalpy, comparative enthalpy, or differential dry bulb.

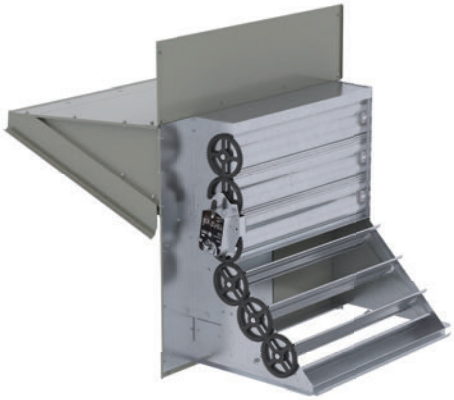

Note: *Downflow low leak economizer is available as a factory installed option. Horizontal low leak economizer is only available as a field installed option.*

LP Conversion Kit

Provided for field conversion of gas/electric units from natural gas to propane.

Modulating Gas Heat (10:1)

Modulating natural gas heat option, with a high modulation range of 10:1, automatically modulates the gas value and combustion blower motor providing improved comfort with stable temperature control.

- Less on/off cycling
- Continuous heating output
- Wide operation range (low and high heat)
- Coupled with variable speed fan control enables independent control of supply airflow and discharge air temperature
- With Zoned Rooftop Systems, modulating gas heat enables effective supply air tempering as well as warm-up sequences

Modulating Hot Gas Reheat (HGRH)

All 6 to 25 tons units can be ordered with a factory installed modulating hot gas reheat (HGRH) humidity control system designed to provide year around comfort by improving indoor air quality while controlling humidity levels.

- Modulating gas reheat, no more on/off
- Maintains stable neutral leaving air temperature, resulting in less cycling
- Includes both relative humidity and dew point control
- Available on downflow or horizontal

Multi-Speed Indoor Fan System

This system incorporates a multi-speed fan control to change the speed of the fan to 66% of full airflow based off of compressor stages.

Multiple-Zone VAV Control

A multiple-zone VAV (MZVAV) system consists of a packaged rooftop unit that serves several individually controlled zones. Each zone is equipped with a VAV terminal unit that varies the quantity of air delivered to maintain the desired temperature in that zone. The rooftop unit controller varies the speed of the indoor fan to maintain the static pressure in the supply ductwork at a setpoint, ensuring that all zones receive the necessary quantity of air. In addition, cooling capacity is cycled to maintain the supply air temperature at the desired setpoint.

For decades, Trane has been an industry leader in rooftop VAV systems. Now, multiple-zone VAV control is available in the light commercial rooftop platform (12.5 to 25 tons).

Other Benefits

- Cabinet design ensures water integrity
- Ease of Service, Installation and Maintenance
- Mixed model build enables “fastest in the industry” ship cycle times
- Outstanding Airflow Distribution
- Symbio Controls

Rigorous Testing

All Precedent™ designs were rigorously tested at the factory to ensure premier quality.

Rain testing is completed to ensure water integrity.

Transportation vibration and forklifting tests are performed to ensure that the unit arrives at the job site in top condition.

Rigging lift and drop tests are completed to assure that the lifting lugs and rails hold up under stress.

During production we perform 100% coil leak test at the factory. The assembled unit is leak tested to 465 psig. All parts are inspected at the point of final assembly. Sub standard parts are identified and rejected immediately. Every unit receives a 100% unit run test before leaving the production line to make sure it meets rigorous requirements.

Single Zone VAV (SZVAV)

SZVAV is fully integrated into the control system. It provides the simplest and fastest commissioning in the industry through proven factory-installed, wired, and tested system controllers. All control modules, logic boards and sensors are factory installed and tested to ensure the highest quality and most reliable system available. This means no special programming of algorithms, or hunting at the jobsite for field installed sensors, boards, etc. SZVAV is a quick and simple solution for many applications and is available from your most trusted rooftop VAV system solution provider -Trane.

Building system modeling in energy simulation software such as TRACE is recommended to evaluate performance improvements for your application.

Supply/Return Air Smoke Detector

With this option installed, if smoke is detected, all unit operation will be shut down. Reset will be manual at the unit. In order for the supply air smoke detector or return air smoke detector to properly sense smoke in the supply air stream or the return air stream, the air velocity entering the smoke detector unit must be between 500 to 4000 feet per minute. Equipment covered in this manual will develop an airflow velocity that falls within these limits over the entire airflow range specified in the evaporator fan performance table.

Through-the-Base Electrical Access

An electrical service entrance shall be provided allowing electrical access for both control and main power connections inside the curb and through-the-base of the unit. Option will allow for field installation of liquid-tight conduit and an external field installed disconnect switch.

Through-the-Base Gas Access

Factory provided through-the-base openings simplify piping. Because these utility openings frequently minimize the number of roof penetrations, the integrity of roofing materials is enhanced.

This option shall have all piping necessary including, black steel, manual gas shut-off valve, elbows, and union. This assembly will require minor field labor to install.

Ventilation Override

Ventilation override allows the unit to be set to transition to up to three different pre-programmed sequences for smoke purge, pressurization, and exhaust. The transition occurs when a binary input on the Customer Connection Module is closed (shorted). This would typically be a hard wired relay output from a smoke detector or fire control panel. The Customer Connection module that allows ventilation override is available as a field installed accessory (FIASCCM001). For more information on functionality, refer to *Symbio™ 700 Controller with Precedent™ Packaged Rooftop Air-Conditioners Application Guide* (ACC-APG002*-EN).

Model Number Description

Digit 1 — Unit Function

W = Packaged Heat Pump
D = Dual Fuel Heat Pump

Digit 2 — Cooling Efficiency

H = High Efficiency

Digit 3 — Refrigerant

J = R-410A

Digit 4,5,6 — Nominal Gross Cooling Capacity (MBh)

150 = 12.5 Ton
180 = 15 Ton
240 = 20 Ton
300 = 25 Ton

Digit 7 — Design Sequence

Digit 8 — Voltage Selection

3 = 208–230/60/3
4 = 460/60/3
W = 575/60/3

Digit 9 — Unit Controls

S = Symbio™ 700

Digit 10 — Heat Type

0 = Base Model (None or Electric)
A = Stainless Steel Gas Heat
B = Modulating Gas Heat

Digit 11 — Heating Capacity

0 = No Heat
G = 18 kW Electric Heat
K = 27 kW Electric Heat
N = 36 kW Electric Heat
P = 54 kW Electric Heat
R = 72 kW Electric Heat
L = Low Gas Heat
M = Medium Gas Heat
H = High Gas Heat

Digit 12, 13 — Service Sequence

****** = Factory Assigned

Digit 14 — Fresh Air Selection

0 = No Fresh Air
A = Manual Outside Air Damper 0–50%
B = Motorized Outside Air Damper 0–50%
C = Economizer, Dry Bulb 0–100% without Barometric Relief
D = Economizer, Dry Bulb 0–100% with Barometric Relief
E = Economizer, Reference Enthalpy 0–100% without Barometric Relief
F = Economizer, Reference Enthalpy 0–100% with Barometric Relief
G = Economizer, Comparative Enthalpy 0–100% without Barometric Relief
H = Economizer, Comparative Enthalpy 0–100% with Barometric Relief
K = Downflow Low Leak Economizer, Dry Bulb with Barometric Relief
M = Downflow Low Leak Economizer, Reference Enthalpy with Barometric Relief
P = Downflow Low Leak Economizer, Comparative Enthalpy with Barometric Relief
R= Downflow Low Leak Economizer, Differential Dry Bulb with Barometric Relief

Digit 15 — Supply Fan/Motor

0 = Multi-Speed Motor
1 = Optional Oversized/High Static Motor
2 = Single Zone Variable Air Volume with Standard Motor
3 = Single Zone Variable Air Volume with Oversized/High Static Motor
4 = Multiple Zone Variable Air Volume with Standard Motor
5 = Multiple Zone Variable Air Volume with Oversized/High Static Motor

Digit 16 — Hinged Access/Filters

0 = Standard Panels/Standard Filters
A = Hinged Access Panels/Standard Filters
B = Standard Panels/2 inch MERV 8 Filters
C = Hinged Access Panels/2 inch MERV 8 Filters
D = Standard Panels/2 inch MERV 13 Filters
E = Hinged Access Panels/2 inch MERV 13 Filters

Digit 17 — Coil Protection

0 = Standard Coil
1 = Condenser with CompleteCoat

Digit 18 — Through-the-Base Provisions

0 = No Through-the-Base Provisions
A = Through-the-Base Electric
B = Through-the-Base Gas Piping
C = Through-the-Base Electric and Gas Piping

Digit 19 — Disconnect/Circuit Breaker (three-phase only)

0 = No Disconnect/No Circuit Breaker
1 = Unit Mounted/Non-Fused Disconnect
2 = Unit Mounted Circuit Breaker

Digit 20— Convenience Outlet

0 = No Convenience Outlet
A = Unpowered 20A Convenience Outlet
B = Powered 15A Convenience Outlet (three-phase only)

Digit 21— Communications Options

0 = No Communications Interface
1 = Advanced Controller with BACnet® Communications Interface
2 = Advanced Controller with LonTalk® Communications Interface
3 = Advanced Controller with Air-Fi® Communications Interface

Digit 22— Refrigeration System Option

0 = Standard Refrigeration System
A = Dehumidification Option

Digit 23— Controls Expansion Module

0 = None
1 = XM-30 Expansion Module
2 = XM-32 Expansion Module
3 = XM-30 and XM-32 Expansion Module
4 = XM–30 Expansion Module (Qty 2)
5 = XM–32 Expansion Module (Qty 2)

Digit 24— Smoke Detector

0 = No Smoke Detector
A = Return Air Smoke Detector
B = Supply Air Smoke Detector
C = Supply and Return Air Smoke Detectors

Digit 25— System Monitoring Controls

0 = No Monitoring Control
1 = Clogged Filter Switch
2 = Condensate Overflow Switch
3 = Discharge Air Sensing Tube
4 = Clogged Filter Switch and Condensate Overflow Switch
5 = Clogged Filter Switch and Discharge Air Sensing Tube
6 = Condensate Overflow Switch and Discharge Air Sensing Tube
7 = Clogged Filter Switch, Condensate Overflow Switch and Discharge Air Sensing Tube

Digit 26— Not Used

Digit 27— Hardware Enhancements

0 = No Enhancements
1 = Stainless Steel Drain Pan

Digit 28— Short Circuit Current Rating

0 = Standard (5k) SCCR Marking
A = Tier 2 (65K) SCCR Marking

Digit 29— Low Ambient

0 = None
A = Low Ambient Cooling to 0°F

General Data

Table 5. General data — 12.5 to 25 tons, high efficiency (WHJ*)

	12.5 Tons	15 Tons	20 Tons	25 Tons
	WHJ150	WHJ180	WHJ240	WHJ300
Cooling Performance				
Gross Cooling Capacity	154000	182000	246000	272000
EER	12.3	12.0	11.2	10.4
Nominal cfm/AHRI Rated cfm	5000	6000	8000	10000
AHRI Net Cooling Capacity	150000	178000	240000	262000
IEER (2-Speed)	17.8	17.9	17.2	16.1
IEER (SZVAV/MZVAV)	18.3	18.4	17.7	16.6
System Power (kW)	12.20	14.83	21.43	25.19
Heating Performance				
High Temp Btuh Rating	135000	162000	224000	242000
System Power (kW) / COP	10.41 / 3.80	12.05 / 3.90	18.14 / 3.60	20.21 / 3.50
Low Temp Btuh Rating	62500	76000	119000	136000
System Power (kW) / COP	8.81 / 2.08	10.66 / 2.09	16.37 / 2.13	17.11 / 2.33
Compressor				
Number/Type	2/Manifold Scroll	2/Manifold Scroll	2/Manifold Scroll	2/Manifold Scroll
Percent Capacity (Stage 1 - Stage 4)	33/67/100/NA	33/67/100/NA	24/36/64/100	25/37/63/100
Sound				
Outdoor Sound Rating (dBA)	87	87	93	93
Outdoor Coil				
Type	RTPF Lanced	RTPF Lanced	RTPF Lanced	RTPF Lanced
Configuration	Full Face	Full Face	Full Face	Full Face
Tube Size (in.)	0.313	0.313	0.313	0.313
Face Area (sq. ft.)	34.71	34.71	40.05	40.05
Rows/FPI (Fins per inch)	3/16	3/16	3/16	3/16
Refrigerant Control	TXV	TXV	TXV	TXV
Indoor Coil				
Type	RTPF Lanced	RTPF Lanced	RTPF Lanced	RTPF Lanced
Configuration	Full Face	Full Face	Full Face	Full Face
Tube Size (in.)	0.313	0.313	0.313	0.313
Face Area (sq. ft.)	25.83	25.83	30.09	30.09
Rows/FPI (Fins per inch)	4/16	4/16	4/16	4/16
Refrigerant Control	TXV	TXV	TXV	TXV
STD. Drain Connection No./Size (in.)	1/1.00 PVC Socket	1/1.00 PVC Socket	1/1.00 PVC Socket	1/1.00 PVC Socket
Stainless Drain Connection No./Size (in.)	1/1.00 NPT	1/1.00 NPT	1/1.00 NPT	1/1.00 NPT
Reheat Coil				
Type	RTPF Lanced	RTPF Lanced	RTPF Lanced	RTPF Lanced
Configuration	Full Face	Full Face	Full Face	Full Face
Tube Size (in.)	0.313	0.313	0.313	0.313
Face Area (sq. ft.)	25.83	25.83	25.83	25.83

Table 5. General data — 12.5 to 25 tons, high efficiency (WHJ*) (continued)

	12.5 Tons	15 Tons	20 Tons	25 Tons
	WHJ150	WHJ180	WHJ240	WHJ300
Rows/FPI (Fins per inch)	1/16	1/16	1/16	1/16
Outdoor Fan				
Type	Propeller	Propeller	Propeller	Propeller
No. Used/Diameter (in.)	2/26x3	2/26x3	2/28x4	2/28x4
Drive Type/No. Speeds	Direct/1	Direct/1	Direct/1	Direct/1
CFM	10480	10480	15810	15810
Motor HP	2/0.50	2/0.50	2/1.0	2/1.0
Motor RPM	1125	1125	1125	1125
Indoor Fan				
Type	BC Plenum	BC Plenum	BC Plenum	BC Plenum
No. Used/Diameter (in.)/Width (in.)	2/23x6	2/23x6	2/23x6	2/23x6
Drive Type/No. Speeds/RPM	Direct / Variable	Direct / Variable	Direct / Variable	Direct / Variable
Motor HP (Standard/Oversized)	2.9 / –	2.9 / –	2.9 / –	2.9 / 4.2
Max Motor RPM	1850	1850	1850	1850 / 1940
Filters[(a)]				
Type Furnished	Throwaway	Throwaway	Throwaway	Throwaway
Number Size Recommended	(8) 20 x 24 x 2	(8) 20 x 24 x 2	(4) 20 x 24 x 2 (4) 20 x 30 x 2	(4) 20 x 24 x 2 (4) 20 x 30 x 2
Refrigerant Charge				
lbs of R-410A	30.0	33.0	39.0	38.0
lbs of R-410A, Hot Gas Reheat	36.0	35.0	42.0	38.0
Cabinet				
Cabinet Size	D0	D0	D1	D1

Note: 12.5-20 ton units are AHRI Certified to AHRI Standard 340-360 (I-P). 25 ton unit tested in accordance with AHRI Standard 340-360.

(a) Outdoor sound rating shown is tested in accordance with AHRI 370-2015. For additional information reference the outdoor sound power level data in the performance section.

Table 6. General data — 12.5 to 25 tons, high efficiency (DHJ*)

	12.5 Tons	15 Tons	20 Tons	25 Tons
	DHJ150	DHJ180	DHJ240	DHJ300
Cooling Performance				
Gross Cooling Capacity	154000	182000	246000	272000
EER	12.2	11.8	11.0	10.2
Nominal cfm/AHRI Rated cfm	5000	6000	8000	10000
AHRI Net Cooling Capacity	152000	178000	240000	260000
IEER (2-Speed)	17.6	17.7	17.0	15.9
IEER (SZVAV/MZVAV)	18.1	18.2	17.5	16.4
System Power (kW)	12.45	14.83	21.81	25.49
Heating Performance				
High Temp Btuh Rating	135000	162000	224000	242000
System Power (kW) / COP	10.41 / 3.80	12.05 / 3.90	18.14 / 3.60	20.21 / 3.50
Low Temp Btuh Rating	62500	76000	119000	136000
System Power (kW) / COP	8.81 / 2.08	10.66 / 2.09	16.37 / 2.13	17.11 / 2.33

Table 6. General data — 12.5 to 25 tons, high efficiency (DHJ*) (continued)

	12.5 Tons	15 Tons	20 Tons	25 Tons
	DHJ150	DHJ180	DHJ240	DHJ300
Compressor				
Number/Type	2/Manifold Scroll	2/Manifold Scroll	2/Manifold Scroll	2/Manifold Scroll
Percent Capacity (Stage 1 - Stage 4)	33/67/100/NA	33/67/100/NA	24/36/64/100	25/37/63/100
Sound				
Outdoor Sound Rating (dBA)	87	87	93	93
Outdoor Coil				
Type	RTPF Lanced	RTPF Lanced	RTPF Lanced	RTPF Lanced
Configuration	Full Face	Full Face	Full Face	Full Face
Tube Size (in.)	0.313	0.313	0.313	0.313
Face Area (sq. ft.)	34.71	34.71	40.05	40.05
Rows/FPI (Fins per inch)	3/16	3/16	3/16	3/16
Refrigerant Control	TXV	TXV	TXV	TXV
Indoor Coil				
Type	RTPF Lanced	RTPF Lanced	RTPF Lanced	RTPF Lanced
Configuration	Full Face	Full Face	Full Face	Full Face
Tube Size (in.)	0.313	0.313	0.313	0.313
Face Area (sq. ft.)	25.83	25.83	30.09	30.09
Rows/FPI (Fins per inch)	4/16	4/16	4/16	4/16
Refrigerant Control	TXV	TXV	TXV	TXV
STD. Drain Connection No./Size (in.)	1/1.00 PVC Socket	1/1.00 PVC Socket	1/1.00 PVC Socket	1/1.00 PVC Socket
Stainless Drain Connection No./Size (in.)	1/1.00 NPT	1/1.00 NPT	1/1.00 NPT	1/1.00 NPT
Reheat Coil				
Type	RTPF Lanced	RTPF Lanced	RTPF Lanced	RTPF Lanced
Configuration	Full Face	Full Face	Full Face	Full Face
Tube Size (in.)	0.313	0.313	0.313	0.313
Face Area (sq. ft.)	25.83	25.83	25.83	25.83
Rows/FPI (Fins per inch)	1/16	1/16	1/16	1/16
Outdoor Fan				
Type	Propeller	Propeller	Propeller	Propeller
No. Used/Diameter (in.)	2/26x3	2/26x3	2/28x4	2/28x4
Drive Type/No. Speeds	Direct/1	Direct/1	Direct/1	Direct/1
CFM	10480	10480	15810	15810
Motor HP	2/0.50	2/0.50	2/1.0	2/1.0
Motor RPM	1125	1125	1125	1125
Indoor Fan				
Type	BC Plenum	BC Plenum	BC Plenum	BC Plenum
No. Used/Diameter (in.)/Width (in.)	2/23x6	2/23x6	2/23x6	2/23x6
Drive Type/No. Speeds/RPM	Direct / Variable	Direct / Variable	Direct / Variable	Direct / Variable
Motor HP (Standard/Oversized)	2.9 / –	2.9 / –	2.9 / 4.2	2.9 / 4.2
Max Motor RPM	1850	1850	1850 / 1940	1850 / 1940
Filters[a]				
Type Furnished	Throwaway	Throwaway	Throwaway	Throwaway
Number Size Recommended	(8) 20 x 24 x 2	(8) 20 x 24 x 2	(4) 20 x 24 x 2 (4) 20 x 30 x 2	(4) 20 x 24 x 2 (4) 20 x 30 x 2
Refrigerant Charge				

Table 6. General data — 12.5 to 25 tons, high efficiency (DHJ*) (continued)

	12.5 Tons	15 Tons	20 Tons	25 Tons
	DHJ150	DHJ180	DHJ240	DHJ300
lbs of R-410A	30.0	33.0	39.0	38.0
lbs of R-410A, Hot Gas Reheat	36.0	35.0	42.0	38.0
Heating Performance (Gas/Electric Only)				
Heating Input: Staged				
Low Heat Input (Btu) (High/Low Stage)	150,000/105,000	250,000/175,000	250,000/175,000	250,000/175,000
Mid Heat Input (Btu) (High/Low Stage)	200,000/140,000	320,000/224,000	320,000/224,000	320,000/224,000
High Heat Input (Btu) (High/Low Stage)	250,000/175,000	400,000/280,000	400,000/280,000	400,000/280,000
Heating Output: Staged				
Low Heat Input (Btu) (High/Low Stage)	121,500/85,000	202,500/141,750	202,500/141,750	202,500/141,750
Mid Heat Input (Btu) (High/Low Stage)	162,000/113,400	259,200/181,440	259,200/181,440	259,200/181,440
High Heat Input (Btu) (High/Low Stage)	202,500/141,750	324,000/226,800	324,000/226,800	324,000/226,800
Heating Input: Modulating				
Low Heat Input (Btu) (Maximum/Minimum)	N/A	250,000/25,000	250,000/25,000	250,000/25,000
High Heat Input (Btu) (Maximum/Minimum)	250,000/25,000	400,000/40,000	400,000/40,000	400,000/40,000
Heating Output: Modulating				
Low Heat Output (Btu) (Maximum/Minimum)	N/A	202,500/20,250	202,500/20,250	202,500/20,250
High Heat Output (Btu) (Maximum/Minimum)	202,500/20,250	324,000/32,400	324,000/32,400	324,000/32,400
Steady State Efficiency %				
Low Heat Input	81	81	81	81
Mid Heat Input	81	81	81	81
High Heat Input	81	81	81	81
No. Burners: Staged				
Low Heat Output	5	5	5	5
Mid Heat Output	5	7	7	7
High Heat Output	7	8	8	8
No. Burners: Modulating				
Low Heat Output	N/A	6	6	6
High Heat Output	6	8	8	8
No. Stages				
Low Heat Input	2	2	2	2
Mid Heat Input	2	2	2	2
High Heat Input	2	2	2	2
Gas Supply Line Pressure (InWC)				
Natural (minimum/maximum) Low Heat	4.5/14.0	4.5/14.0	4.5/14.0	4.5/14.0
Natural (minimum/maximum) Mid Heat	4.5/14.0	4.5/14.0	4.5/14.0	4.5/14.0
Natural (minimum/maximum) High Heat	4.5/14.0	6.0/14.0	6.0/14.0	6.0/14.0
LP (minimum/maximum)	11.5/14.0	11.5/14.0	11.5/14.0	11.5/14.0
Gas Connection Pipe Size (in.)				
Low Heat	3/4	3/4	3/4	3/4
Mid Heat	3/4	3/4	3/4	3/4
High Heat	3/4	3/4	3/4	3/4
Cabinet				
Cabinet Size	D0	D0	D1	D1

(a) Outdoor sound rating shown is tested in accordance with AHRI 370-2015. For additional information reference the outdoor sound power level data in the performance section.

Gross Cooling Capacities

Table 7. Gross cooling capacities — 12.5 tons

CFM	Ent DB (°F)	Entering Wet Bulb Temp (°F)						Entering Wet Bulb Temp (°F)						Entering Wet Bulb Temp (°F)					
		61		67		73		61		67		73		61		67		73	
		MBh	SHC	MBh	SHC	MBh	SHC	MBh	SHC	MBh	SHC	MBh	SHC	MBh	SHC	MBh	SHC	MBh	SHC
		Ambient Temperature 85°F						Ambient Temperature 95°F						Ambient Temperature 105°F					
3750	75	138.5	109.3	154.1	85.8	169.9	61.2	130.4	105.0	145.1	81.4	159.7	56.9	121.8	100.4	135.8	77.0	149.2	52.5
	80	139.0	127.7	154.9	105.5	171.1	81.1	131.0	123.2	145.9	101.1	161.2	76.8	122.7	118.5	136.7	96.7	151.0	72.4
	85	142.3	142.3	155.3	125.0	171.9	100.8	135.5	135.5	146.5	120.7	162.1	96.5	128.4	128.4	137.2	116.2	152.0	92.2
	90	150.3	150.3	155.8	143.3	172.4	120.4	143.3	143.3	147.2	138.8	162.7	116.2	136.0	136.0	138.2	134.2	152.6	111.8
4500	75	143.5	120.7	159.2	92.5	174.3	63.1	134.9	116.2	149.6	88.0	163.7	58.8	125.8	109.9	139.9	83.5	152.7	54.3
	80	145.0	142.5	160.0	115.9	176.1	86.8	136.8	136.8	150.5	111.4	165.7	82.5	128.9	128.9	140.8	106.9	155.0	78.1
	85	152.3	152.3	160.6	139.2	177.0	110.3	144.8	144.8	151.2	133.1	166.7	106.0	137.0	137.0	141.6	128.4	156.0	101.6
	90	160.9	160.9	162.3	160.8	177.5	133.7	153.2	153.2	153.6	153.6	167.3	129.4	145.2	145.2	145.4	145.4	156.7	125.0
5000	75	146.1	128.0	161.7	96.7	176.6	64.3	137.3	121.6	151.9	92.3	165.6	59.6	128.3	116.6	141.9	87.7	153.6	55.0
	80	148.9	148.9	162.6	122.6	178.7	90.5	141.2	141.2	152.9	118.1	168.0	86.1	133.3	133.3	142.9	113.6	157.0	81.7
	85	157.8	157.8	163.5	146.6	179.6	116.5	149.9	149.9	154.0	141.8	169.0	112.1	141.7	141.7	144.3	137.0	158.1	107.7
	90	166.8	166.8	167.0	167.0	180.2	142.3	158.7	158.7	158.9	158.9	169.7	138.0	150.2	150.2	150.4	150.4	158.9	133.5
5500	75	148.5	133.1	163.8	100.9	178.4	65.5	139.6	128.2	153.8	96.4	167.3	61.1	130.4	123.2	143.6	91.8	155.8	56.6
	80	153.3	153.3	164.7	129.2	180.8	94.1	145.4	145.4	154.8	124.7	169.8	89.7	137.1	137.1	144.6	120.1	158.7	85.3
	85	162.6	162.6	166.1	155.2	181.7	122.5	154.4	154.4	156.6	150.4	170.9	118.1	145.8	145.8	146.8	145.5	159.8	113.6
	90	171.8	171.8	172.1	172.1	182.5	150.7	163.3	163.3	163.6	163.6	171.8	146.4	154.4	154.4	154.7	154.7	160.8	139.2
6000	75	150.7	139.7	165.6	104.9	180.0	66.6	141.6	134.8	155.4	100.4	168.6	62.1	132.4	129.6	145.0	95.8	156.8	57.6
	80	157.3	157.3	166.6	135.6	182.6	97.6	149.0	149.0	156.5	131.1	171.4	93.2	140.4	140.4	146.2	123.5	160.1	88.7
	85	166.8	166.8	168.7	163.6	183.6	128.4	158.2	158.2	159.0	158.8	172.6	124.0	149.3	149.3	149.4	149.4	161.3	119.5
	90	176.3	176.3	176.5	176.5	184.5	159.1	167.4	167.4	167.6	167.6	173.7	151.8	158.2	158.2	158.4	158.4	162.6	146.9
		Ambient Temperature 115°F						Ambient Temperature 125°F											
3750	75	112.8	95.7	126.1	72.4	138.3	48.0	103.0	89.1	115.6	67.5	126.5	43.2						
	80	114.0	113.6	127.0	92.1	140.4	67.9	105.3	105.3	116.5	87.2	128.9	63.2						
	85	120.8	120.8	127.4	110.2	141.4	87.7	112.5	112.5	117.1	105.0	129.9	83.0						
	90	128.2	128.2	128.9	128.9	142.0	107.4	119.7	119.7	119.9	119.9	130.6	102.6						
4500	75	116.6	104.7	129.6	78.8	141.3	49.8	106.7	99.3	118.6	74.0	129.1	45.0						
	80	120.8	120.8	130.6	102.3	143.9	73.5	112.0	112.0	119.6	97.4	131.9	68.8						
	85	128.7	128.7	131.7	123.4	145.0	97.1	119.7	119.7	121.1	118.1	133.0	92.3						
	90	136.6	136.6	136.8	136.8	145.7	120.5	127.3	127.3	127.5	127.5	133.8	113.2						
5000	75	118.8	111.4	131.4	83.0	142.8	50.9	108.7	105.8	120.1	78.1	130.1	46.0						
	80	124.8	124.8	132.4	108.9	145.6	77.1	115.6	115.6	121.2	101.0	133.4	72.4						
	85	133.0	133.0	134.2	131.9	146.8	103.1	123.5	123.5	123.7	123.7	134.6	98.3						
	90	141.1	141.1	141.4	141.4	147.6	126.4	131.3	131.3	131.5	131.5	135.7	121.0						
5500	75	120.8	117.9	132.8	87.1	143.8	51.9	110.7	110.7	121.3	82.1	130.8	47.1						
	80	128.3	128.3	134.0	112.4	147.0	80.7	118.7	118.7	122.8	106.8	134.5	75.9						
	85	136.7	136.7	136.8	136.8	148.3	109.1	126.8	126.8	126.9	126.9	135.9	104.3						
	90	145.0	145.0	145.2	145.2	149.5	134.1	134.7	134.7	134.9	134.9	137.4	128.7						
6000	75	122.8	122.8	134.0	91.0	144.5	52.9	113.0	113.0	122.3	86.1	131.4	48.1						
	80	131.2	131.2	135.5	118.1	148.2	84.1	121.3	121.3	124.2	112.4	135.5	79.3						
	85	139.8	139.8	140.0	140.0	149.5	114.9	129.6	129.6	129.7	129.7	136.9	105.9						
	90	148.4	148.4	148.6	148.6	151.2	141.7	137.7	137.7	137.9	137.9	139.0	136.2						

Notes:

1. All capacities shown are gross and have not considered indoor fan heat. To obtain NET cooling capacity subtract indoor fan heat. For indoor fan heat formula, refer to appropriate airflow table notes.
2. MBh = Total gross capacity
3. SHC = Sensible heat capacity

Table 8. Gross cooling capacities — 15 tons

CFM	Ent DB (°F)	Entering Wet Bulb Temp (°F)						Entering Wet Bulb Temp (°F)						Entering Wet Bulb Temp (°F)					
		61		67		73		61		67		73		61		67		73	
		MBh	SHC	MBh	SHC	MBh	SHC	MBh	SHC	MBh	SHC	MBh	SHC	MBh	SHC	MBh	SHC	MBh	SHC
		Ambient Temperature 85°F						Ambient Temperature 95°F						Ambient Temperature 105°F					
4500	75	165.1	129.5	183.4	101.0	202.7	71.5	155.7	124.2	173.1	95.8	191.4	66.3	145.8	118.8	162.4	90.4	179.6	61.0
	80	165.8	152.9	184.0	124.5	203.1	95.1	156.5	146.8	173.8	119.3	191.9	90.0	146.9	141.3	163.0	113.9	180.2	84.7
	85	169.8	169.8	184.4	147.9	203.6	118.7	161.9	161.9	174.3	142.7	192.5	113.6	153.5	153.5	163.6	137.4	180.9	108.3
	90	179.1	179.1	185.3	171.4	204.1	142.1	171.0	171.0	175.3	166.2	193.0	137.1	162.4	162.4	165.0	159.8	181.4	131.8
5400	75	170.9	142.9	189.1	108.9	208.1	73.7	161.0	137.5	178.3	103.6	196.2	68.5	150.7	132.0	167.1	98.1	183.8	63.2
	80	172.9	169.9	189.8	136.8	208.8	101.8	163.5	163.5	179.0	131.5	197.0	96.6	154.0	154.0	167.8	126.0	184.8	91.3
	85	181.4	181.4	190.5	164.6	209.3	129.8	172.7	172.7	180.0	159.4	197.7	124.6	163.6	163.6	168.9	154.0	185.5	119.3
	90	191.4	191.4	192.9	191.5	209.8	157.7	182.5	182.5	183.0	183.0	198.3	152.5	173.1	173.1	173.3	173.3	186.2	147.3
6000	75	174.0	151.5	192.1	113.9	210.9	75.1	163.9	146.1	181.0	108.5	198.6	69.9	153.4	140.6	169.5	103.0	186.0	64.5
	80	177.4	177.4	192.7	144.6	211.6	106.1	168.5	168.5	181.7	139.3	199.6	100.9	159.2	159.2	170.3	133.8	187.1	95.6
	85	187.7	187.7	194.0	175.5	212.2	137.0	178.6	178.6	183.2	168.9	200.3	131.8	169.1	169.1	172.1	163.2	187.9	126.5
	90	198.1	198.1	198.2	198.2	212.9	167.8	188.7	188.7	189.0	189.0	201.1	162.6	178.8	178.8	179.1	179.1	188.8	157.3
6600	75	176.8	160.0	194.5	118.7	213.1	76.4	166.5	154.6	183.2	113.3	200.6	71.2	156.0	147.2	171.5	107.8	187.8	65.8
	80	182.5	182.5	195.2	152.3	214.0	110.3	173.3	173.3	184.0	147.0	201.8	105.1	163.7	163.7	172.4	141.5	189.1	99.7
	85	193.2	193.2	197.1	184.6	214.6	144.0	183.7	183.7	186.2	179.1	202.5	138.8	173.8	173.8	175.0	173.4	189.8	133.4
	90	203.8	203.8	204.1	204.1	215.5	177.7	194.1	194.1	194.3	194.3	203.5	172.5	183.8	183.8	184.1	184.1	191.0	167.2
7200	75	179.3	166.6	196.6	123.4	215.0	77.7	169.0	160.9	185.1	118.0	202.4	72.5	158.4	155.0	173.2	112.5	189.3	67.1
	80	187.0	187.0	197.4	159.8	216.0	114.4	177.5	177.5	186.1	154.5	203.6	109.1	167.5	167.5	174.3	149.0	190.7	103.7
	85	197.9	197.9	200.0	194.7	216.7	150.8	188.1	188.1	189.2	189.1	204.3	145.6	177.8	177.8	178.1	178.1	191.4	140.3
	90	208.9	208.9	209.1	209.1	217.8	187.4	198.8	198.8	199.0	199.0	205.7	182.3	188.1	188.1	188.3	188.3	193.1	174.8
		Ambient Temperature 115°F						Ambient Temperature 125°F											
4500	75	135.4	113.1	151.1	84.9	167.1	55.6	124.3	107.2	139.0	79.0	153.6	49.8						
	80	136.9	135.5	151.8	108.4	167.9	79.3	126.5	126.5	139.7	102.5	154.6	73.5						
	85	144.5	144.5	152.4	131.8	168.6	102.9	134.9	134.9	140.5	126.0	155.4	97.1						
	90	153.2	153.2	154.3	154.2	169.2	126.4	143.2	143.2	143.5	143.5	156.0	120.6						
5400	75	139.9	126.3	155.3	92.5	170.8	57.7	128.5	118.8	142.6	86.6	156.8	51.9						
	80	144.7	144.7	156.0	120.4	172.0	85.8	134.5	134.5	143.4	114.5	158.2	80.0						
	85	153.9	153.9	157.4	146.9	172.7	113.8	143.3	143.3	145.2	140.8	158.9	108.0						
	90	163.0	163.0	163.3	163.3	173.5	141.8	152.1	152.1	152.4	152.4	159.8	136.0						
6000	75	142.5	133.2	157.4	97.4	172.7	59.0	131.0	126.8	144.5	91.4	158.5	53.2						
	80	149.4	149.4	158.3	128.2	174.0	90.1	138.8	138.8	145.5	122.3	159.9	84.2						
	85	158.9	158.9	160.4	157.3	174.8	120.9	147.9	147.9	148.2	148.2	160.7	115.1						
	90	168.3	168.3	168.6	168.6	175.8	151.9	156.8	156.8	157.1	157.1	161.9	146.1						
6600	75	145.0	141.1	159.2	102.1	174.3	60.3	133.4	133.4	146.0	96.1	159.8	54.4						
	80	153.5	153.5	160.2	135.8	175.7	94.2	142.4	142.4	147.2	129.9	161.4	88.3						
	85	163.2	163.2	163.5	163.5	176.5	127.9	151.7	151.7	151.9	151.9	162.3	122.1						
	90	172.8	172.8	173.1	173.1	177.9	161.8	160.9	160.9	161.1	161.1	164.0	153.4						
7200	75	147.3	147.3	160.7	106.8	175.6	61.5	136.0	136.0	147.3	100.8	161.0	55.7						
	80	157.0	157.0	162.0	143.3	177.2	98.2	145.6	145.6	148.9	134.8	162.6	92.3						
	85	166.9	166.9	167.1	167.1	178.0	134.7	155.0	155.0	155.2	155.2	163.6	128.9						
	90	176.7	176.7	176.9	176.9	179.9	168.9	164.3	164.3	164.5	164.5	165.9	162.5						

Notes:

1. All capacities shown are gross and have not considered indoor fan heat. To obtain NET cooling capacity subtract indoor fan heat. For indoor fan heat formula, refer to appropriate airflow table notes.
2. MBh = Total gross capacity
3. SHC = Sensible heat capacity

Gross Cooling Capacities

Table 9. Gross cooling capacities — 20 tons

CFM	Ent DB (°F)	Entering Wet Bulb Temp (°F)						Entering Wet Bulb Temp (°F)						Entering Wet Bulb Temp (°F)					
		61		67		73		61		67		73		61		67		73	
		MBh	SHC	MBh	SHC	MBh	SHC	MBh	SHC	MBh	SHC	MBh	SHC	MBh	SHC	MBh	SHC	MBh	SHC
		Ambient Temperature 85°F						Ambient Temperature 95°F						Ambient Temperature 105°F					
6000	75	222.9	176.2	248.0	138.3	274.7	98.9	209.8	169.3	233.8	131.5	259.0	92.3	195.7	162.0	218.6	124.4	242.3	85.4
	80	224.4	207.8	248.9	169.8	275.3	130.6	211.6	199.6	234.8	163.0	259.9	124.1	198.0	192.1	219.7	155.9	243.5	117.2
	85	230.4	230.4	249.6	201.1	276.1	162.2	219.6	219.6	235.7	194.4	260.9	155.7	207.8	207.8	220.8	187.4	244.6	148.8
	90	243.2	243.2	251.3	232.8	276.8	193.7	232.1	232.1	237.7	226.2	261.7	187.2	220.2	220.2	223.3	217.5	245.5	180.3
7200	75	231.0	194.2	255.9	148.8	282.1	102.0	217.3	187.2	241.0	141.9	265.7	95.3	202.6	179.9	225.1	134.8	248.1	88.3
	80	234.4	230.4	256.9	186.2	283.2	139.6	221.5	221.5	242.1	179.3	267.0	133.0	208.2	208.2	226.2	172.2	249.9	126.1
	85	246.1	246.1	258.4	223.7	284.1	177.1	234.3	234.3	243.9	217.0	268.2	170.6	221.5	221.5	228.4	209.9	251.1	163.7
	90	259.9	259.9	262.2	259.7	284.9	214.5	247.8	247.8	248.7	248.7	269.2	208.0	234.8	234.8	235.1	235.1	252.3	201.2
8000	75	235.4	205.8	260.0	155.5	285.9	103.8	221.4	198.8	244.7	148.6	269.0	97.1	206.5	189.1	228.4	141.4	251.1	90.1
	80	240.7	240.7	261.0	196.7	287.2	145.4	228.4	228.4	245.9	189.9	270.7	138.7	215.3	215.3	229.8	182.7	253.2	131.8
	85	254.8	254.8	263.3	238.3	288.2	186.8	242.4	242.4	248.5	229.4	271.8	180.1	229.0	229.0	232.9	221.8	254.4	173.2
	90	269.1	269.1	269.5	269.5	289.3	228.1	256.4	256.4	256.8	256.8	273.2	221.5	242.7	242.7	243.0	243.0	256.1	214.7
8800	75	239.3	217.2	263.4	162.0	289.0	105.6	225.1	207.7	247.8	155.0	271.8	98.9	210.2	199.8	231.2	147.8	253.6	91.9
	80	247.5	247.5	264.6	207.0	290.6	151.0	234.9	234.9	249.2	200.2	273.7	144.3	221.3	221.3	232.8	193.0	255.9	137.4
	85	262.2	262.2	267.7	250.2	291.6	196.1	249.3	249.3	252.9	243.1	274.9	189.5	235.4	235.4	237.2	235.5	257.2	182.6
	90	277.0	277.0	277.4	277.4	293.2	241.4	263.7	263.7	264.1	264.1	276.8	234.8	249.5	249.5	249.8	249.8	259.4	228.0
9600	75	242.9	225.7	266.3	168.3	291.6	107.3	228.7	218.1	250.4	161.3	274.2	100.6	213.6	210.2	233.5	154.0	255.7	93.5
	80	253.6	253.6	267.8	217.1	293.4	156.5	240.5	240.5	252.2	210.3	276.3	149.8	226.6	226.6	235.6	203.1	258.2	142.8
	85	268.7	268.7	272.0	263.7	294.5	205.3	255.4	255.4	257.0	256.4	277.5	198.7	241.0	241.0	241.5	241.5	259.6	191.7
	90	283.9	283.9	284.3	284.3	296.6	254.4	270.2	270.2	270.5	270.5	280.0	247.9	255.4	255.4	255.7	255.7	262.4	241.1
		Ambient Temperature 115°F						Ambient Temperature 125°F											
6000	75	180.7	154.3	202.3	117.0	224.3	78.2	164.5	146.3	184.8	109.1	204.9	70.5						
	80	183.7	183.7	203.5	148.5	226.0	110.0	169.5	169.5	186.0	140.7	207.1	102.5						
	85	195.1	195.1	204.8	180.1	227.2	141.7	181.3	181.3	187.6	172.4	208.4	134.1						
	90	207.2	207.2	208.3	208.3	228.2	173.2	193.1	193.1	193.5	193.5	209.5	165.7						
7200	75	187.0	170.0	208.1	127.2	229.5	81.0	170.5	161.3	189.9	119.3	209.3	73.3						
	80	194.8	194.8	209.4	164.7	231.7	118.9	180.2	180.2	191.3	156.9	212.0	111.3						
	85	207.8	207.8	212.0	200.1	233.0	156.5	192.8	192.8	194.7	191.7	213.4	148.9						
	90	220.7	220.7	221.0	221.0	234.4	194.0	205.3	205.3	205.6	205.6	215.1	186.5						
8000	75	190.8	180.8	211.1	133.8	232.1	82.8	174.2	172.0	192.4	125.9	211.6	75.1						
	80	201.3	201.3	212.6	175.2	234.6	124.6	186.0	186.0	194.3	167.3	214.5	116.9						
	85	214.6	214.6	216.5	213.9	235.9	166.0	199.0	199.0	199.3	199.3	216.0	158.4						
	90	227.9	227.9	228.3	228.3	237.9	207.6	211.8	211.8	212.1	212.1	218.2	196.8						
8800	75	194.4	191.4	213.5	140.2	234.3	84.5	177.8	177.8	194.5	132.2	213.4	76.8						
	80	206.8	206.8	215.5	185.5	237.0	130.1	191.0	191.0	196.8	174.0	216.6	122.4						
	85	220.5	220.5	220.9	220.9	238.4	175.3	204.3	204.3	204.5	204.5	218.2	167.7						
	90	234.2	234.2	234.4	234.4	240.9	217.6	217.4	217.4	217.6	217.6	221.3	209.2						
9600	75	197.8	197.8	215.6	146.4	236.1	86.2	181.6	181.6	196.3	138.4	214.9	78.4						
	80	211.5	211.5	217.9	192.1	239.0	135.5	195.3	195.3	199.3	183.3	218.3	127.8						
	85	225.6	225.6	225.8	225.8	240.6	184.5	208.8	208.8	209.0	209.0	220.2	176.9						
	90	239.5	239.5	239.8	239.8	243.9	229.8	222.1	222.1	222.4	222.4	224.2	221.3						

Notes:

1. All capacities shown are gross and have not considered indoor fan heat. To obtain NET cooling capacity subtract indoor fan heat. For indoor fan heat formula, refer to appropriate airflow table notes.
2. MBh = Total gross capacity
3. SHC = Sensible heat capacity

Table 10. Gross cooling capacities — 25 tons

CFM	Ent DB (°F)	Entering Wet Bulb Temp (°F)						Entering Wet Bulb Temp (°F)						Entering Wet Bulb Temp (°F)					
		61		67		73		61		67		73		61		67		73	
		MBh	SHC	MBh	SHC	MBh	SHC	MBh	SHC	MBh	SHC	MBh	SHC	MBh	SHC	MBh	SHC	MBh	SHC
		Ambient Temperature 85°F						Ambient Temperature 95°F						Ambient Temperature 105°F					
7500	75	247.4	201.9	273.9	155.7	301.5	107.9	233.5	194.4	258.6	148.2	284.3	100.4	218.8	186.5	242.5	140.4	266.0	92.7
	80	250.4	238.1	275.3	193.8	303.1	146.3	237.0	230.3	260.1	186.3	286.4	138.9	222.9	222.1	244.0	178.5	268.8	131.3
	85	260.5	260.5	276.6	231.8	304.4	184.4	248.4	248.4	261.7	224.4	288.0	177.1	235.4	235.4	245.9	216.7	270.5	169.5
	90	274.9	274.9	280.0	267.7	305.4	222.4	262.5	262.5	265.6	260.0	289.1	215.2	249.2	249.2	250.6	250.6	271.7	207.6
9000	75	255.6	222.5	281.6	167.6	308.2	111.2	241.2	214.9	265.7	160.0	290.4	103.8	225.8	207.0	248.8	152.1	271.5	96.0
	80	261.5	261.5	283.1	212.5	310.7	156.6	248.1	248.1	267.3	204.9	293.4	149.1	234.5	234.5	250.5	197.0	275.0	141.4
	85	276.3	276.3	285.7	257.7	312.3	201.6	263.1	263.1	270.3	250.3	295.1	194.2	249.1	249.1	253.9	238.4	276.9	186.5
	90	291.7	291.7	292.4	292.4	313.6	246.4	278.2	278.2	278.3	278.3	296.7	239.1	263.7	263.7	264.1	264.1	278.7	231.5
10000	75	260.2	235.7	285.7	175.2	311.9	113.4	245.5	228.1	269.3	167.5	293.6	105.8	230.0	215.4	252.0	159.6	274.4	98.0
	80	268.7	268.7	287.2	224.4	314.7	163.1	255.6	255.6	271.1	216.8	297.0	155.6	241.4	241.4	254.0	209.0	278.2	147.9
	85	284.8	284.8	290.9	270.6	316.3	212.5	271.1	271.1	275.3	262.5	298.8	205.1	256.4	256.4	258.9	253.9	280.1	197.3
	90	300.8	300.8	301.2	301.2	318.1	261.9	286.7	286.7	287.0	287.0	300.9	254.5	271.5	271.5	271.8	271.8	282.6	246.9
11000	75	264.3	248.5	289.0	182.4	314.9	115.4	249.5	235.9	272.4	174.8	296.3	107.8	233.9	227.1	254.8	166.7	276.7	99.9
	80	275.8	275.8	290.8	236.0	318.1	169.4	262.0	262.0	274.5	228.4	300.0	161.9	247.2	247.2	257.2	220.5	280.9	154.1
	85	292.2	292.2	295.8	285.7	319.7	223.0	277.9	277.9	280.1	277.5	301.8	215.6	262.7	262.7	263.6	263.6	282.9	207.8
	90	308.6	308.6	308.9	308.9	322.1	276.9	293.9	293.9	294.2	294.2	304.6	269.5	278.2	278.2	278.4	278.4	286.1	261.9
12000	75	268.2	255.8	291.9	189.5	317.4	117.3	253.2	247.3	275.0	181.7	298.6	109.7	237.4	237.4	257.1	173.7	278.6	101.8
	80	281.8	281.8	294.1	247.3	320.9	175.5	267.5	267.5	277.5	239.7	302.5	167.9	252.3	252.3	260.0	231.7	283.2	160.1
	85	298.5	298.5	300.4	300.4	322.6	233.2	283.8	283.8	284.6	284.6	304.4	225.8	268.1	268.1	268.2	268.2	285.2	218.0
	90	315.3	315.3	315.7	315.7	325.7	291.4	300.1	300.1	300.4	300.4	308.0	284.1	283.9	283.9	284.1	284.1	289.3	269.9
		Ambient Temperature 115°F						Ambient Temperature 125°F											
7500	75	203.0	178.3	225.2	132.2	246.7	84.6	186.2	169.5	206.7	123.5	225.9	76.1						
	80	208.2	208.2	226.8	170.3	250.0	123.3	193.3	193.3	208.4	161.7	229.8	114.8						
	85	221.4	221.4	229.0	208.7	251.9	161.5	206.2	206.2	211.0	196.2	231.7	153.1						
	90	234.8	234.8	235.0	235.0	253.3	199.7	219.1	219.1	219.4	219.4	233.3	191.2						
9000	75	209.6	194.3	230.8	143.8	251.5	87.8	192.5	184.5	211.5	135.1	229.9	79.2						
	80	219.8	219.8	232.7	188.8	255.5	133.4	203.9	203.9	213.7	180.2	234.5	124.8						
	85	234.0	234.0	236.8	229.5	257.5	178.4	217.5	217.5	218.6	218.6	236.6	169.9						
	90	248.1	248.1	248.4	248.4	259.7	223.6	231.1	231.1	231.3	231.3	239.1	215.1						
10000	75	213.7	206.2	233.7	151.2	253.9	89.8	196.3	196.2	214.0	142.4	231.8	81.1						
	80	226.1	226.1	236.0	200.7	258.4	139.8	209.5	209.5	216.5	186.5	237.0	131.2						
	85	240.7	240.7	241.7	241.7	260.4	189.2	223.5	223.5	223.6	223.6	239.1	180.7						
	90	255.2	255.2	255.5	255.5	263.3	239.0	237.4	237.4	237.6	237.6	242.5	224.2						
11000	75	217.4	217.4	236.1	158.4	255.8	91.7	200.0	200.0	216.0	149.5	233.2	82.9						
	80	231.4	231.4	238.9	212.3	260.7	146.0	214.3	214.3	219.3	196.7	239.0	137.3						
	85	246.4	246.4	246.5	246.5	262.8	199.7	228.6	228.6	228.8	228.8	241.3	191.1						
	90	261.3	261.3	261.5	261.5	266.6	247.5	242.7	242.7	243.0	243.0	245.7	237.6						
12000	75	220.9	220.9	238.1	165.3	257.3	93.5	203.7	203.7	217.7	156.3	234.3	84.7						
	80	236.1	236.1	241.5	216.8	262.7	152.0	218.4	218.4	221.8	206.4	240.6	143.3						
	85	251.3	251.3	251.5	251.5	265.0	209.9	232.9	232.9	233.1	233.1	243.3	201.3						
	90	266.4	266.4	266.7	266.7	269.8	260.6	247.3	247.3	247.5	247.5	248.8	248.8						

Notes:

1. All capacities shown are gross and have not considered indoor fan heat. To obtain NET cooling capacity subtract indoor fan heat. For indoor fan heat formula, refer to appropriate airflow table notes.
2. MBh = Total gross capacity
3. SHC = Sensible heat capacity

Heating Capacities

Table 11. Heating capacities — 12.5 tons

Outdoor Temp (°F) 0% RH	Integrated Heating Capacity (MBh/1000) at Indicated Dry Bulb Temp (°F)				Total Power (kW) at Indicated Dry Bulb Temp (°F)			
	60	70	75	80	60	70	75	80
-8	45.7	43.4	42.3	41.1	9.0	9.9	10.3	10.8
-3	52.6	50.3	49.1	47.9	9.1	10.0	10.5	10.9
2	59.8	57.3	56.1	54.8	9.2	10.1	10.6	11.1
7	67.3	64.6	63.3	61.9	9.4	10.3	10.8	11.3
12	75.3	72.5	71.1	69.7	9.5	10.4	10.9	11.4
17	83.7	80.6	79.1	77.7	9.7	10.6	11.1	11.6
22	92.6	89.3	87.7	86.1	9.8	10.8	11.3	11.8
27	101.9	98.3	96.5	94.8	10.0	10.9	11.5	12.0
32	111.5	107.6	105.7	103.8	10.2	11.1	11.6	12.2
37	121.1	116.8	114.7	112.7	10.4	11.3	11.8	12.4
42	130.9	126.2	124.0	121.8	10.6	11.5	12.0	12.6
47	141.0	136.0	133.5	131.2	10.8	11.7	12.3	12.8
52	151.6	146.1	143.5	140.9	11.0	12.0	12.5	13.0
57	162.5	156.5	153.7	150.9	11.2	12.2	12.7	13.3
62	173.2	166.8	163.8	160.8	11.5	12.4	13.0	13.5
67	185.1	178.1	174.8	171.5	11.7	12.7	13.2	13.8
72	196.6	188.7	185.0	181.3	12.0	12.9	13.5	14.0

Notes:

1. For other airflow conditions, see heating capacity correction factor Net Heating Capacity and Power Input include indoor fan heat at nominal CFM and 0.35 inch ESP. To obtain net heating at other conditions, subtract fan heat at this condition and add fan heat at new condition.
2. Heating capacities and powers are integrated to include the effects of defrost in the frost region.
3. All heating capacities and power (kW) are at 70% OD relative humidity.

Table 12. Heating capacities — 15 tons

Outdoor Temp (°F) 70% RH	Integrated Heating Capacity (MBh/1000) at Indicated Dry Bulb Temp (°F)				Total Power in Kilowatts at Indicated Dry Bulb Temp (°F)			
	60	70	75	80	60	70	75	80
-8	55.5	54.0	53.2	52.3	11.0	12.1	12.6	13.3
-3	63.6	61.8	60.9	59.9	11.1	12.2	12.8	13.4
2	72.0	70.0	68.9	67.9	11.3	12.4	13.0	13.6
7	80.8	78.6	77.4	76.2	11.5	12.6	13.2	13.9
12	90.2	87.7	86.4	85.1	11.7	12.8	13.4	14.1
17	99.9	97.1	95.7	94.2	11.9	13.0	13.6	14.3
22	110.3	107.2	105.6	104.0	12.1	13.2	13.8	14.5
27	121.0	117.6	115.8	114.0	12.3	13.5	14.1	14.7
32	132.2	128.4	126.5	124.5	12.5	13.7	14.3	14.9
37	143.3	139.0	136.9	134.8	12.7	13.9	14.5	15.2
42	154.7	150.0	147.6	145.3	13.0	14.1	14.8	15.4
47	166.2	161.1	158.6	156.0	13.2	14.4	15.0	15.7
52	178.2	172.6	169.8	167.1	13.4	14.6	15.3	15.9
57	190.5	184.3	181.3	178.3	13.7	14.9	15.5	16.2

Table 12. Heating capacities — 15 tons (continued)

Outdoor Temp (°F) 70% RH	Integrated Heating Capacity (MBh/1000) at Indicated Dry Bulb Temp (°F)				Total Power in Kilowatts at Indicated Dry Bulb Temp (°F)			
	60	70	75	80	60	70	75	80
62	202.0	195.3	192.0	188.6	14.0	15.1	15.8	16.4
67	213.9	206.6	202.9	199.2	14.3	15.4	16.1	16.7
72	226.9	218.7	214.7	210.8	14.6	15.8	16.4	17.1

Notes:

1. For other airflow conditions, see heating capacity correction factor Net Heating Capacity and Power Input include indoor fan heat at nominal CFM and 0.35 inch ESP. To obtain net heating at other conditions, subtract fan heat at this condition and add fan heat at new condition.
2. Heating capacities and powers are integrated to include the effects of defrost in the frost region.
3. All heating capacities and power (kW) are at 70% OD relative humidity.

Table 13. Heating capacities — 20 tons

Outdoor Temp (°F) 70% RH	Integrated Heating Capacity (MBh/1000) at Indicated Dry Bulb Temp (°F)				Total Power in Kilowatts at Indicated Dry Bulb Temp (°F)			
	60	70	75	80	60	70	75	80
-8	79.9	76.5	74.7	72.8	16.2	17.7	18.5	19.4
-3	91.0	87.4	85.6	83.7	16.4	17.9	18.8	19.7
2	102.4	98.7	96.8	94.8	16.7	18.2	19.0	19.9
7	114.3	110.4	108.4	106.2	16.9	18.4	19.3	20.2
12	127.1	123.0	120.8	118.5	17.1	18.7	19.5	20.5
17	140.1	135.8	133.5	131.2	17.3	18.9	19.8	20.7
22	154.1	149.5	147.1	144.6	17.6	19.2	20.1	21.0
27	168.6	163.6	161.0	158.4	17.8	19.4	20.3	21.3
32	183.7	178.3	175.5	172.8	18.1	19.7	20.6	21.5
37	198.5	192.7	189.8	186.8	18.3	20.0	20.9	21.8
42	213.9	207.6	204.4	201.2	18.6	20.2	21.1	22.1
47	229.5	222.8	219.4	216.0	18.8	20.5	21.4	22.4
52	245.7	238.5	234.8	231.1	19.1	20.8	21.7	22.7
57	262.5	254.6	250.6	246.7	19.4	21.1	22.0	23.0
62	278.8	270.3	266.0	261.7	19.6	21.3	22.3	23.3
67	295.1	285.8	281.1	276.4	19.9	21.6	22.6	23.6
72	312.8	302.3	297.1	291.9	20.2	22.0	22.9	23.9

Notes:

1. For other airflow conditions, see heating capacity correction factor Net Heating Capacity and Power Input include indoor fan heat at nominal CFM and 0.35 inch ESP. To obtain net heating at other conditions, subtract fan heat at this condition and add fan heat at new condition.
2. Heating capacities and powers are integrated to include the effects of defrost in the frost region.
3. All heating capacities and power (kW) are at 70% OD relative humidity.

Table 14. Heating capacities — 25 tons

Outdoor Temp (°F) 70% RH	Integrated Heating Capacity (MBh/1000) at Indicated Dry Bulb Temp (°F)				Total Power in Kilowatts at Indicated Dry Bulb Temp (°F)			
	60	70	75	80	60	70	75	80
-8	90.3	88.2	87.4	86.7	17.6	19.2	20.1	21.0
-3	101.7	99.4	98.4	97.7	17.8	19.5	20.4	21.3
2	113.6	111.2	110.1	109.1	18.1	19.7	20.6	21.6
7	126.1	123.4	122.2	121.0	18.3	20.0	20.9	21.8
12	139.1	136.2	134.8	133.6	18.6	20.2	21.2	22.1
17	152.6	149.3	147.8	146.5	18.8	20.5	21.4	22.4

Table 14. Heating capacities — 25 tons (continued)

Outdoor Temp (°F) 70% RH	Integrated Heating Capacity (MBh/1000) at Indicated Dry Bulb Temp (°F)				Total Power in Kilowatts at Indicated Dry Bulb Temp (°F)			
	60	70	75	80	60	70	75	80
22	167.0	163.5	161.8	160.1	19.1	20.8	21.7	22.7
27	182.0	177.9	176.2	174.3	19.3	21.0	22.0	23.0
32	197.9	193.6	191.2	189.3	19.6	21.3	22.3	23.3
37	213.6	208.8	206.4	204.2	19.8	21.6	22.5	23.5
42	230.0	224.7	222.1	219.5	20.1	21.9	22.8	23.8
47	246.6	240.8	237.9	235.0	20.4	22.1	23.1	24.1
52	263.9	257.5	254.3	251.2	20.6	22.4	23.4	24.4
57	282.2	275.2	271.6	268.1	20.9	22.7	23.7	24.7
62	300.4	292.6	288.7	284.8	21.2	23.0	24.0	25.1
67	318.4	309.8	305.4	301.0	21.5	23.3	24.3	25.4
72	338.1	328.1	323.2	318.2	21.9	23.7	24.7	25.7

Notes:

1. For other airflow conditions, see heating capacity correction factor Net Heating Capacity and Power Input include indoor fan heat at nominal CFM and 0.35 inch ESP. To obtain net heating at other conditions, subtract fan heat at this condition and add fan heat at new condition.
2. Heating capacities and powers are integrated to include the effects of defrost in the frost region.
3. All heating capacities and power (kW) are at 70% OD relative humidity.

Reheat Temperature Rise

Table 15. Reheat temperature rise — 12.5 tons

Airflow (cfm)	Ent DB (°F)	Entering Wet Bulb (°F)											
		51				55				59			
		Lvg Evap DB (°F)		Lvg Reheat DB (°F)		Lvg Evap DB (°F)		Lvg Reheat DB (°F)		Lvg Evap DB (°F)		Lvg Reheat DB (°F)	
		MIN	MAX	MIN	MAX	MIN	MAX	MIN	MAX	MIN	MAX	MIN	MAX
Ambient DB 60°F													
2500	60	30.1[a]	27.9[a]	35.0	59.2	34.3	32.5[a]	39.4	63.6	38.6	37.9	44.0	67.5
	65	30.0[a]	27.8[a]	35.0	59.1	34.1	32.3[a]	39.4	63.6	38.5	37.7	44.0	67.4
	70	30.0[a]	27.8[a]	35.1	59.0	34.0	32.2[a]	39.4	63.5	38.3	37.6	44.0	67.4
	75	32.0[a]	29.1[a]	37.4	60.6	34.0	32.1[a]	39.2	63.4	38.2	37.4	43.9	67.3
3000	60	33.3	31.1[a]	37.5	58.4	37.5	35.7	42.0	62.9	41.9	41.0	46.6	67.0
	65	33.2	31.0[a]	37.5	58.4	37.4	35.6	42.0	62.9	41.8	40.8	46.6	66.9
	70	33.5	31.0[a]	38.2	58.5	37.3	35.5	42.0	62.9	41.6	40.7	46.6	66.9
	75	36.5	33.7	41.6	61.5	37.2	35.4	42.2	62.9	41.5	40.6	46.6	66.9
3500	60	35.7	33.6	39.4	57.8	40.0	38.2	43.9	62.4	44.3	43.3	48.4	66.4
	65	35.6	33.5	39.6	57.8	39.9	38.1	43.9	62.4	44.2	43.2	48.4	66.4
	70	37.0	34.0	41.4	58.7	39.8	38.0	43.9	62.4	44.1	43.1	48.5	66.4
	75	40.2	37.5	44.9	62.3	40.3	37.8	44.9	62.4	44.0	43.0	48.5	66.4
4000	60	37.6	35.6	40.9	57.4	41.8	40.1	45.3	61.9	46.2	45.1	49.7	65.9
	65	37.5	35.5	41.1	57.5	41.7	40.0	45.3	61.9	46.1	45.0	49.8	66.0
	70	39.9	37.0	44.0	59.4	41.6	39.9	45.6	62.0	46.0	44.9	49.9	66.0
	75	43.2	40.6	47.6	63.1	43.3	40.7	47.7	63.1	45.9	44.8	50.1	66.0
4500	60	39.1	37.2	42.1	57.0	43.3	41.7	46.4	61.5	47.7	46.5	50.8	65.5
	65	38.9	37.1	42.3	57.2	43.2	41.6	46.5	61.5	47.6	46.4	50.9	65.6
	70	42.4	39.5	46.1	60.0	43.1	41.5	46.8	61.7	47.5	46.3	51.0	65.6
	75	45.8	43.3	49.8	63.7	45.9	43.4	49.9	63.7	47.4	46.3	51.3	65.8
5000	60	40.3	38.5	43.0	56.6	44.5	43.0	47.3	61.1	48.9	47.8	51.6	65.3
	65	40.9	38.3	44.1	56.9	44.5	42.9	47.4	61.2	48.8	47.6	51.8	65.3
	70	44.4	41.6	48.0	60.5	44.3	42.7	47.8	61.4	48.7	47.5	51.9	65.3
	75	48.0	45.6	51.7	64.3	48.1	45.7	51.9	64.3	48.5	47.5	52.3	65.6
5500	60	41.3	39.6	44.0	56.4	45.5	44.0	48.0	60.8	49.9	48.7	52.3	64.9
	65	42.5	39.4	45.6	56.7	45.5	44.0	48.2	60.9	49.8	48.6	52.5	65.0
	70	46.2	43.5	49.5	61.0	46.3	43.8	49.6	61.2	49.7	48.5	52.6	65.1
	75	49.8	47.6	53.4	64.9	49.9	47.7	53.5	64.9	49.5	48.4	53.0	65.4
6000	60	42.1	40.6	44.7	56.1	46.4	44.9	48.7	60.5	50.7	49.6	52.9	64.6
	65	44.0	41.3	46.9	57.5	46.3	44.9	49.1	60.6	50.6	49.5	53.1	64.7
	70	47.8	45.2	50.9	61.5	47.8	44.6	51.0	61.0	50.5	49.4	53.5	64.8
	75	51.5	49.4	54.8	65.4	51.6	49.5	54.9	65.4	51.6	49.2	55.0	65.2
Ambient DB 65°F													
2500	60	30.6[a]	28.1[a]	35.7	60.4	34.8	32.5[a]	40.2	65.1	39.1	37.4	45.0	69.7
	65	30.5[a]	27.8[a]	35.7	60.3	34.7	32.3[a]	40.1	65.1	39.0	37.3	44.8	69.5
	70	30.5[a]	28.0[a]	35.9	60.3	34.6	32.2[a]	40.1	65.0	38.9	37.2	44.8	69.5
	75	32.7[a]	29.3[a]	38.4	62.0	34.5	32.1[a]	40.1	64.9	38.8	37.0	44.8	69.5

Table 15. Reheat temperature rise — 12.5 tons (continued)

Airflow (cfm)	Ent DB (°F)	Entering Wet Bulb (°F)											
		51				55				59			
		Lvg Evap DB (°F)		Lvg Reheat DB (°F)		Lvg Evap DB (°F)		Lvg Reheat DB (°F)		Lvg Evap DB (°F)		Lvg Reheat DB (°F)	
		MIN	MAX	MIN	MAX	MIN	MAX	MIN	MAX	MIN	MAX	MIN	MAX
3000	60	33.8	31.3[a]	38.1	59.5	38.0	35.7	42.6	64.3	42.4	40.6	47.2	68.8
	65	33.7	31.2[a]	38.1	59.4	37.9	35.6	42.6	64.3	42.2	40.5	47.2	68.7
	70	34.2	31.1[a]	39.1	59.5	37.8	35.5	42.7	64.3	42.1	40.3	47.3	68.8
	75	37.3	33.8	42.5	62.8	37.7	35.4	42.8	64.2	42.0	40.2	47.3	68.7
3500	60	36.1	33.8	40.0	58.8	40.4	38.2	44.4	63.5	44.8	43.0	49.0	68.0
	65	36.0	33.7	40.2	58.8	40.3	38.1	44.5	63.6	44.6	42.9	49.0	68.1
	70	37.7	34.2	42.2	59.8	40.2	38.0	44.5	63.6	44.5	42.7	49.1	68.1
	75	40.9	37.5	45.8	63.5	41.0	37.9	45.8	63.8	44.5	42.7	49.1	68.1
4000	60	38.0	35.7	41.4	58.2	42.2	40.2	45.8	62.9	46.6	44.8	50.4	67.4
	65	37.8	35.7	41.6	58.4	42.1	40.1	45.9	63.0	46.5	44.7	50.4	67.5
	70	40.6	37.1	44.8	60.4	42.0	40.0	46.1	63.0	46.4	44.6	50.4	67.5
	75	43.9	40.6	48.4	64.2	44.0	40.7	48.5	64.2	46.3	44.5	50.7	67.5
4500	60	39.4	37.3	42.5	57.8	43.7	41.7	46.9	62.4	48.1	46.4	51.2	66.9
	65	39.2	37.2	42.8	58.0	43.6	41.6	46.9	62.5	47.9	46.2	51.4	66.9
	70	43.0	39.6	46.9	60.9	43.4	41.5	47.3	62.7	47.8	46.1	51.5	67.0
	75	46.4	43.2	50.6	64.8	46.5	43.3	50.7	64.8	47.7	46.1	51.8	67.2
5000	60	40.6	38.7	43.4	57.3	44.9	43.0	47.7	62.0	49.2	47.6	52.0	66.4
	65	41.4	38.5	44.8	57.6	44.8	42.9	47.8	62.0	49.1	47.5	52.2	66.5
	70	45.0	41.8	48.7	61.4	44.6	42.8	48.2	62.3	49.0	47.4	52.3	66.6
	75	48.6	45.4	52.5	65.4	48.7	45.5	52.6	65.4	48.9	47.3	52.7	66.8
5500	60	41.6	39.8	44.4	57.0	45.8	44.1	48.4	61.6	50.2	48.6	52.7	65.9
	65	43.1	39.5	46.2	57.4	45.7	44.0	48.8	61.7	50.1	48.5	52.9	66.1
	70	46.8	43.6	50.2	61.9	46.8	43.8	50.3	62.0	50.0	48.4	53.3	66.2
	75	50.4	47.4	54.1	65.9	50.5	47.5	54.2	65.9	50.6	48.3	54.3	66.5
6000	60	42.4	40.7	45.0	56.7	46.6	45.0	49.0	61.2	51.0	49.5	53.2	65.5
	65	44.5	41.5	47.5	58.2	46.6	44.9	49.4	61.3	50.9	49.4	53.5	65.7
	70	48.3	45.2	51.5	62.3	48.4	44.7	51.6	61.8	50.8	49.3	53.9	65.8
	75	52.0	49.1	55.5	66.3	52.1	49.2	55.6	66.3	52.2	49.1	55.7	66.2
Ambient DB 70°F													
2500	60	31.2[a]	28.3[a]	36.4	61.6	35.4	32.6[a]	40.9	66.5	39.7	37.3	45.6	71.3
	65	31.1[a]	28.1[a]	36.4	61.5	35.2	32.4[a]	40.9	66.5	39.6	37.2	45.6	71.3
	70	31.1[a]	28.1[a]	36.6	61.5	35.1	32.3[a]	40.9	66.5	39.5	37.1	45.6	71.3
	75	33.5	29.5[a]	39.4	63.3	35.1	32.3[a]	40.9	66.3	39.4	37.0	45.6	71.3
3000	60	34.2	31.4[a]	38.8	60.5	38.5	35.9	43.3	65.4	42.9	40.5	47.9	70.4
	65	34.2	31.3[a]	38.8	60.4	38.4	35.7	43.3	65.4	42.7	40.4	47.9	70.3
	70	34.9	31.3[a]	40.0	60.5	38.3	35.6	43.3	65.4	42.6	40.3	48.0	70.3
	75	38.0	34.0	43.4	64.0	38.2	35.6	43.5	65.5	42.5	40.2	48.0	70.3
3500	60	36.5	33.9	40.5	59.7	40.8	38.3	45.0	64.6	45.2	42.9	49.5	69.5
	65	36.5	33.8	40.7	59.6	40.7	38.2	45.0	64.6	45.1	42.8	49.6	69.4
	70	38.3	34.4	43.0	60.8	40.6	38.1	45.2	64.6	45.0	42.7	49.7	69.4
	75	41.6	37.7	46.6	64.6	41.7	38.0	46.7	64.7	44.9	42.6	49.7	69.4

Table 15. Reheat temperature rise — 12.5 tons (continued)

Airflow (cfm)	Ent DB (°F)	Entering Wet Bulb (°F)											
		51				55				59			
		Lvg Evap DB (°F)		Lvg Reheat DB (°F)		Lvg Evap DB (°F)		Lvg Reheat DB (°F)		Lvg Evap DB (°F)		Lvg Reheat DB (°F)	
		MIN	MAX	MIN	MAX	MIN	MAX	MIN	MAX	MIN	MAX	MIN	MAX
4000	60	38.3	35.9	41.9	59.0	42.6	40.3	46.3	63.9	47.0	44.8	50.8	68.6
	65	38.2	35.8	42.2	59.2	42.5	40.2	46.4	63.9	46.9	44.7	50.9	68.6
	70	41.2	37.4	45.5	61.3	42.4	40.1	46.6	63.9	46.8	44.6	51.0	68.7
	75	44.6	40.7	49.2	65.2	44.7	40.8	49.3	65.3	46.7	44.5	51.2	68.7
4500	60	39.8	37.5	42.9	58.5	44.0	41.8	47.3	63.2	48.4	46.4	51.7	67.9
	65	40.0	37.4	43.7	58.7	43.9	41.7	47.4	63.3	48.3	46.2	51.9	68.0
	70	43.6	39.8	47.6	61.8	43.8	41.6	47.8	63.5	48.2	46.1	52.0	68.1
	75	47.1	43.3	51.4	65.8	47.2	43.4	51.5	65.8	48.1	46.1	52.3	68.3
5000	60	40.9	38.8	44.0	58.0	45.2	43.1	48.1	62.7	49.5	47.6	52.5	67.3
	65	41.9	38.6	45.4	58.3	45.1	43.0	48.5	62.8	49.4	47.5	52.7	67.4
	70	45.6	41.9	49.4	62.3	45.6	42.9	49.4	63.1	49.3	47.4	52.8	67.5
	75	49.2	45.5	53.2	66.3	49.3	45.6	53.3	66.3	49.2	47.3	53.2	67.8
5500	60	41.9	39.9	44.8	57.6	46.1	44.2	48.8	62.2	50.5	48.7	53.1	66.8
	65	43.6	39.6	46.8	58.0	46.0	44.1	49.2	62.3	50.3	48.5	53.3	66.9
	70	47.3	43.8	50.9	62.7	47.4	43.9	50.9	62.7	50.3	48.4	53.7	67.0
	75	51.0	47.4	54.8	66.7	51.1	47.5	55.0	66.8	51.2	48.3	55.0	67.4
6000	60	42.6	40.8	45.4	57.2	46.9	45.1	49.4	61.8	51.3	49.6	53.6	66.3
	65	45.0	41.7	48.1	58.8	46.8	45.0	49.8	61.9	51.1	49.4	53.8	66.5
	70	48.8	45.4	52.1	63.0	48.9	44.8	52.2	62.4	51.0	49.3	54.3	66.6
	75	52.6	49.1	56.2	67.2	52.7	49.2	56.3	67.2	52.8	49.1	56.4	67.1

Note: MIN, MAX: The leaving evaporator temperature is affected by the modulating valve position. The MIN and MAX numbers represent modulating valve position impact on both the leaving evaporator temperature and the leaving reheat coil temperature. MAX represents wide open, MIN represents closed to minimum position.

[a] The unit might be tripped by Frostat at these conditions due to low leaving evaporator air temperature.

Table 16. Reheat temperature rise — 15 tons

Airflow (cfm)	Ent DB (°F)	Entering Wet Bulb (°F)											
		51				55				59			
		Lvg Evap DB (°F)		Lvg Reheat DB (°F)		Lvg Evap DB (°F)		Lvg Reheat DB (°F)		Lvg Evap DB (°F)		Lvg Reheat DB (°F)	
		MIN	MAX	MIN	MAX	MIN	MAX	MIN	MAX	MIN	MAX	MIN	MAX
Ambient DB 60°F													
3000	60	30.9[a]	29.6[a]	36.7	61.9	35.1	34.8	41.2	65.6	39.4	40.1	46.1	69.5
	65	30.9[a]	29.5[a]	36.7	61.8	34.9	34.7	41.1	65.6	39.3	40.0	45.9	69.4
	70	30.7[a]	29.4[a]	36.5	61.7	34.9	34.6	41.1	65.6	39.2	39.9	45.9	69.4
	75	33.1	32.0[a]	39.5	63.9	34.9	34.6	41.0	65.6	39.2	39.8	45.9	69.3
3600	60	34.1	32.5[a]	39.0	60.9	38.2	37.6	43.5	64.8	42.6	42.8	48.3	68.6
	65	34.0	32.4[a]	39.0	60.9	38.2	37.6	43.5	64.8	42.5	42.8	48.2	68.6
	70	34.5	32.2[a]	40.0	60.7	38.1	37.5	43.4	64.7	42.4	42.7	48.2	68.6
	75	37.6	36.5	43.5	64.4	38.0	37.3	43.5	64.7	42.3	42.6	48.2	68.6
4200	60	36.4	34.8	40.8	60.1	40.7	39.8	45.3	64.1	45.0	44.9	50.0	68.1
	65	36.3	34.7	40.8	60.1	40.6	39.7	45.3	64.2	44.9	44.8	49.9	68.0
	70	38.0	35.9	43.0	61.5	40.5	39.7	45.3	64.2	44.8	44.8	49.8	68.0
	75	41.3	40.2	46.7	65.0	41.3	40.3	46.7	65.0	44.7	44.7	49.7	68.0

Table 16. Reheat temperature rise — 15 tons (continued)

Airflow (cfm)	Ent DB (°F)	Entering Wet Bulb (°F)											
		51				55				59			
		Lvg Evap DB (°F)		Lvg Reheat DB (°F)		Lvg Evap DB (°F)		Lvg Reheat DB (°F)		Lvg Evap DB (°F)		Lvg Reheat DB (°F)	
		MIN	MAX	MIN	MAX	MIN	MAX	MIN	MAX	MIN	MAX	MIN	MAX
4800	60	38.2	36.6	42.1	59.5	42.4	41.5	46.5	63.6	46.9	46.5	51.2	67.4
	65	38.1	36.5	42.1	59.5	42.4	41.4	46.6	63.5	46.9	46.5	51.3	67.4
	70	40.9	38.8	45.5	62.0	42.3	41.3	46.6	63.6	46.8	46.4	51.3	67.5
	75	44.4	43.3	49.3	65.6	44.5	43.4	49.4	65.6	46.7	46.3	51.3	67.5
5400	60	39.6	38.1	43.1	58.9	43.9	42.9	47.6	63.0	48.4	47.8	52.1	66.9
	65	39.7	37.9	43.7	59.0	43.9	42.8	47.6	63.1	48.3	47.8	52.2	67.0
	70	43.3	41.3	47.6	62.4	43.6	42.7	47.7	63.2	48.2	47.7	52.3	67.0
	75	47.1	45.8	51.7	66.1	46.7	45.9	51.3	66.1	48.1	47.6	52.4	67.1
6000	60	40.8	39.3	44.0	58.5	45.1	44.0	48.4	62.6	49.5	48.9	52.9	66.5
	65	41.7	39.0	45.4	58.6	45.0	43.9	48.5	62.7	49.4	48.8	53.0	66.5
	70	45.6	43.5	49.5	62.8	45.6	43.7	49.6	62.8	49.4	48.8	53.1	66.6
	75	49.2	48.0	53.5	66.6	49.3	48.1	53.6	66.6	49.2	48.6	53.2	66.7
6600	60	41.8	40.3	44.7	58.1	46.0	44.9	49.0	62.2	50.4	49.7	53.5	66.1
	65	43.4	40.9	46.9	59.2	45.9	44.9	49.1	62.3	50.4	49.7	53.6	66.1
	70	47.3	45.3	51.1	63.2	47.4	44.6	51.1	62.5	50.3	49.7	53.8	66.3
	75	51.1	49.9	55.1	67.0	51.1	50.0	55.2	67.0	51.2	49.4	55.2	66.4
7200	60	42.6	41.1	45.3	57.7	46.9	45.7	49.7	61.9	51.2	50.5	54.0	65.7
	65	44.8	42.4	48.1	59.5	46.8	45.7	49.8	62.0	51.2	50.5	54.2	65.8
	70	48.8	46.9	52.4	63.5	48.9	47.0	52.4	63.5	51.1	50.4	54.3	65.9
	75	52.7	51.5	56.5	67.4	52.7	51.6	56.5	67.4	52.8	51.7	56.6	67.5
Ambient DB 65°F													
3000	60	31.4[a]	29.2[a]	37.3	63.3	35.6	34.2	41.9	67.5	39.9	39.6	46.6	71.5
	65	31.3[a]	29.1[a]	37.2	63.3	35.5	34.1	41.8	67.5	39.8	39.5	46.6	71.4
	70	31.3[a]	29.1[a]	37.2	63.2	35.4	34.0	41.8	67.5	39.8	39.4	46.6	71.3
	75	33.8	31.1[a]	40.4	65.4	35.4	33.9	41.8	67.4	39.7	39.3	46.6	71.3
3600	60	34.5	32.2[a]	39.6	62.1	38.7	37.1	44.1	66.5	43.1	42.4	48.8	70.4
	65	34.4	32.1[a]	39.4	62.1	38.7	37.0	44.1	66.5	42.9	42.3	48.8	70.4
	70	35.1	32.0[a]	40.7	62.1	38.5	36.9	44.1	66.5	42.9	42.2	48.9	70.4
	75	38.3	35.6	44.3	65.8	38.4	36.8	44.1	66.5	42.9	42.1	48.9	70.4
4200	60	36.8	34.6	41.2	61.2	41.1	39.3	45.8	65.6	45.4	44.5	50.6	69.7
	65	36.7	34.5	41.3	61.2	40.9	39.3	45.8	65.6	45.3	44.4	50.5	69.6
	70	38.7	35.4	43.8	62.5	40.9	39.2	45.8	65.7	45.2	44.3	50.4	69.6
	75	42.0	39.3	47.5	66.3	42.1	38.9	47.5	65.7	45.1	44.3	50.3	69.7
4800	60	38.6	36.4	42.6	60.4	42.8	41.1	47.0	64.9	47.3	46.1	51.7	68.9
	65	38.4	36.3	42.6	60.4	42.8	41.0	47.1	64.9	47.2	46.0	51.7	68.9
	70	41.5	38.3	46.3	62.9	42.6	40.9	47.1	65.0	47.2	46.0	51.8	69.0
	75	45.0	42.4	50.1	66.7	44.9	42.5	50.0	66.7	47.1	45.9	51.8	69.0
5400	60	39.9	37.9	43.5	59.8	44.2	42.5	48.0	64.2	48.7	47.4	52.6	68.3
	65	40.2	37.8	44.3	59.8	44.1	42.5	48.0	64.3	48.6	47.4	52.7	68.3
	70	43.9	40.8	48.4	63.3	43.9	42.3	48.1	64.4	48.6	47.3	52.7	68.4
	75	47.2	45.0	52.0	67.1	47.8	45.1	52.5	67.1	48.4	47.2	52.8	68.5

Table 16. Reheat temperature rise — 15 tons (continued)

Airflow (cfm)	Ent DB (°F)	Entering Wet Bulb (°F)											
		51				55				59			
		Lvg Evap DB (°F)		Lvg Reheat DB (°F)		Lvg Evap DB (°F)		Lvg Reheat DB (°F)		Lvg Evap DB (°F)		Lvg Reheat DB (°F)	
		MIN	MAX	MIN	MAX	MIN	MAX	MIN	MAX	MIN	MAX	MIN	MAX
6000	60	41.1	39.2	44.4	59.2	45.4	43.7	48.8	63.6	49.8	48.5	53.3	67.7
	65	42.2	38.9	46.0	59.4	45.3	43.6	48.9	63.7	49.7	48.4	53.4	67.8
	70	46.1	42.9	50.2	63.6	46.2	43.4	50.3	63.9	49.7	48.4	53.5	67.9
	75	49.8	47.2	54.2	67.5	49.9	47.3	54.3	67.5	49.4	48.2	53.6	68.0
6600	60	42.0	40.2	45.1	58.7	46.3	44.7	49.4	63.1	50.7	49.4	53.9	67.3
	65	43.9	40.7	47.4	59.8	46.2	44.6	49.5	63.3	50.7	49.4	54.0	67.3
	70	47.8	44.7	51.7	63.9	47.9	44.4	51.7	63.4	50.6	49.3	54.1	67.5
	75	51.6	49.1	55.8	67.9	51.7	49.2	55.8	67.9	51.8	49.1	55.9	67.6
7200	60	42.8	41.1	45.4	58.3	47.2	45.5	50.0	62.7	51.5	50.2	54.4	66.8
	65	45.2	42.2	48.6	60.1	47.1	45.5	50.1	62.8	51.4	50.1	54.5	66.9
	70	49.3	46.3	52.9	64.2	49.4	46.4	53.0	64.2	51.3	50.1	54.6	67.1
	75	53.2	50.8	57.1	68.3	53.3	50.9	57.2	68.3	53.3	51.0	57.2	68.3
Ambient DB 70°F													
3000	60	31.9[a]	29.1[a]	38.0	64.5	36.1	33.8	42.6	69.1	40.5	39.0	47.5	73.3
	65	31.8[a]	29.0[a]	37.9	64.4	36.0	33.7	42.5	69.1	40.4	38.9	47.3	73.3
	70	31.7[a]	29.0[a]	37.8	64.4	35.9	33.6	42.5	69.1	40.3	38.9	47.3	73.3
	75	34.4	30.8[a]	41.2	66.6	35.9	33.5	42.5	69.0	40.2	38.8	47.3	73.3
3600	60	34.9	32.1[a]	40.1	63.1	39.1	36.8	44.8	67.8	43.5	41.8	49.6	72.2
	65	34.9	32.0[a]	40.0	63.1	39.0	36.7	44.7	67.8	43.4	41.8	49.4	72.2
	70	35.8	31.9[a]	41.6	63.1	39.0	36.6	44.6	67.8	43.3	41.7	49.4	72.2
	75	39.0	35.2	45.2	66.9	39.1	36.5	45.3	67.8	43.3	41.6	49.5	72.2
4200	60	37.2	34.5	41.7	62.0	41.4	39.1	46.3	66.8	45.8	44.0	51.1	71.2
	65	37.1	34.4	41.8	62.0	41.3	39.0	46.3	66.8	45.7	43.9	51.0	71.2
	70	39.2	35.3	44.5	63.4	41.3	38.9	46.4	66.8	45.7	43.8	51.1	71.2
	75	42.5	38.9	48.2	67.3	42.6	38.7	48.3	66.9	45.5	43.8	50.8	71.3
4800	60	38.9	36.4	43.0	61.2	43.2	40.9	47.5	65.9	47.6	45.7	52.3	70.4
	65	38.7	36.3	43.0	61.2	43.1	40.8	47.6	65.9	47.6	45.6	52.2	70.4
	70	42.0	38.2	46.9	63.7	43.0	40.7	47.6	66.0	47.5	45.6	52.3	70.4
	75	45.8	41.9	51.0	67.7	45.5	42.0	50.8	67.7	47.4	45.5	52.3	70.4
5400	60	40.2	37.9	43.8	60.4	44.6	42.4	48.4	65.1	49.0	47.1	53.0	69.5
	65	40.8	37.7	45.1	60.5	44.4	42.3	48.5	65.2	48.9	47.0	53.1	69.6
	70	44.5	40.6	49.0	64.0	44.3	42.2	48.5	65.3	48.9	47.0	53.2	69.7
	75	48.3	44.5	53.2	68.1	47.9	44.6	52.8	68.1	48.7	46.8	53.3	69.8
6000	60	41.4	39.2	44.8	59.8	45.7	43.6	49.2	64.5	50.1	48.2	53.7	68.9
	65	42.7	38.9	46.7	60.0	45.6	43.5	49.3	64.5	50.0	48.1	53.8	69.0
	70	46.6	42.7	50.9	64.3	46.7	43.3	50.9	64.7	50.0	48.1	53.9	69.0
	75	50.4	46.7	54.9	68.4	50.4	46.8	55.0	68.4	50.5	47.9	55.1	69.2
6600	60	42.3	40.2	45.4	59.3	46.5	44.6	49.7	63.9	51.0	49.1	54.2	68.3
	65	44.3	40.7	48.0	60.4	46.4	44.5	49.8	64.0	50.9	49.1	54.4	68.4
	70	48.3	44.5	52.3	64.6	48.4	44.3	52.4	64.2	50.8	49.0	54.5	68.5
	75	52.2	48.6	56.4	68.7	52.2	48.7	56.5	68.7	52.3	48.8	56.6	68.7

Table 16. Reheat temperature rise — 15 tons (continued)

Airflow (cfm)	Ent DB (°F)	Entering Wet Bulb (°F)											
		51				55				59			
		Lvg Evap DB (°F)		Lvg Reheat DB (°F)		Lvg Evap DB (°F)		Lvg Reheat DB (°F)		Lvg Evap DB (°F)		Lvg Reheat DB (°F)	
		MIN	MAX	MIN	MAX	MIN	MAX	MIN	MAX	MIN	MAX	MIN	MAX
7200	60	43.0	41.1	45.7	58.8	47.4	45.5	50.3	63.4	51.7	50.0	54.7	67.8
	65	45.8	42.2	49.2	60.6	47.3	45.4	50.5	63.5	51.7	49.9	54.8	67.9
	70	49.8	46.1	53.5	64.9	49.9	46.2	53.6	64.9	51.6	49.9	55.0	68.0
	75	53.7	50.2	57.8	69.0	53.8	50.3	57.8	69.0	53.9	49.6	57.9	68.3

Note: MIN, MAX: The leaving evaporator temperature is affected by the modulating valve position. The MIN and MAX numbers represent modulating valve position impact on both the leaving evaporator temperature and the leaving reheat coil temperature. MAX represents wide open, MIN represents closed to minimum position.

(a) The unit might be tripped by Frostat at these conditions due to low leaving evaporator air temperature.

Table 17. Reheat temperature rise — 20 tons

Airflow (cfm)	Ent DB (°F)	Entering Wet Bulb (°F)											
		51				55				59			
		Lvg Evap DB (°F)		Lvg Reheat DB (°F)		Lvg Evap DB (°F)		Lvg Reheat DB (°F)		Lvg Evap DB (°F)		Lvg Reheat DB (°F)	
		MIN	MAX	MIN	MAX	MIN	MAX	MIN	MAX	MIN	MAX	MIN	MAX
Ambient DB 60°F													
4000	60	30.2[a]	29.2[a]	33.3	54.3	34.3	34.0	37.7	58.1	38.6	39.0	42.3	61.8
	65	29.9[a]	29.1[a]	33.2	54.3	34.3	33.9	37.6	58.0	38.6	38.9	42.1	61.7
	70	29.8[a]	29.1[a]	33.2	54.5	34.2	33.8	37.5	58.1	38.5	38.9	42.1	61.8
	75	32.2[a]	31.3[a]	35.8	56.2	34.1	33.8	37.4	58.2	38.4	38.8	42.0	61.8
4800	60	33.4	32.2[a]	36.0	54.5	37.6	37.0	40.4	58.3	42.0	42.0	45.1	62.1
	65	33.3	32.1[a]	35.9	54.6	37.6	37.0	40.4	58.4	41.9	41.9	45.0	62.1
	70	33.3	32.2[a]	36.4	54.8	37.5	36.9	40.7	58.5	41.8	41.8	45.0	62.1
	75	36.8	35.8	40.1	57.7	37.5	36.8	40.9	58.5	41.7	41.8	44.9	62.2
5600	60	35.8	34.6	38.1	54.5	40.1	39.3	42.6	58.4	44.4	44.2	47.1	62.1
	65	35.7	34.5	38.4	54.7	40.0	39.3	42.7	58.6	44.3	44.1	47.1	62.2
	70	37.3	35.5	40.1	55.7	39.9	39.2	42.4	58.7	44.3	44.1	47.3	62.4
	75	40.5	39.4	43.6	59.0	39.6	39.2	42.4	58.8	44.2	44.0	47.4	62.5
6400	60	37.7	36.5	39.7	54.6	42.0	41.1	44.1	58.5	46.3	45.9	48.5	62.2
	65	37.6	36.3	40.1	54.7	41.9	41.1	44.1	58.6	46.2	45.9	48.7	62.3
	70	40.2	38.5	42.8	56.7	41.8	41.0	44.5	58.8	46.2	45.8	48.9	62.5
	75	43.6	42.5	46.5	60.1	43.6	42.6	46.5	60.1	46.0	45.7	49.1	62.6
7200	60	39.2	38.0	41.0	54.5	43.4	42.5	45.4	58.5	47.7	47.3	49.7	62.2
	65	39.0	37.9	40.9	54.7	43.4	42.5	45.7	58.7	47.7	47.3	49.9	62.4
	70	42.6	40.9	45.1	57.6	43.2	42.4	45.3	58.8	47.6	47.2	50.2	62.5
	75	46.1	45.1	48.8	61.1	46.2	45.2	48.9	61.1	47.6	47.2	50.4	62.7
8000	60	40.4	39.2	42.3	54.5	44.6	43.7	46.5	58.5	48.9	48.4	50.7	62.1
	65	40.4	39.2	42.6	54.8	44.6	43.7	46.7	58.7	48.9	48.4	51.0	62.4
	70	44.7	43.0	47.1	58.4	44.6	43.8	47.0	59.0	48.8	48.4	51.2	62.6
	75	48.3	47.3	50.9	61.9	48.4	47.4	50.9	62.0	48.9	48.4	51.5	62.8
8800	60	41.4	40.2	43.2	54.4	45.6	44.7	47.3	58.4	49.9	49.4	51.5	62.1
	65	42.8	40.3	44.8	54.8	45.6	44.7	47.6	58.7	49.9	49.3	51.8	62.3
	70	46.5	44.9	48.7	59.1	45.7	44.8	47.9	59.0	49.8	49.3	52.1	62.6
	75	50.2	49.2	52.6	62.7	50.2	49.3	52.7	62.7	50.0	49.5	52.4	62.9

Table 17. Reheat temperature rise — 20 tons (continued)

Airflow (cfm)	Ent DB (°F)	Entering Wet Bulb (°F)											
		51				55				59			
		Lvg Evap DB (°F)		Lvg Reheat DB (°F)		Lvg Evap DB (°F)		Lvg Reheat DB (°F)		Lvg Evap DB (°F)		Lvg Reheat DB (°F)	
		MIN	MAX	MIN	MAX	MIN	MAX	MIN	MAX	MIN	MAX	MIN	MAX
9600	60	42.2	41.1	44.0	54.4	46.5	45.5	48.0	58.4	50.7	50.1	52.1	62.0
	65	44.2	41.2	46.2	54.8	46.4	45.5	48.4	58.6	50.7	50.1	52.5	62.3
	70	48.0	46.5	50.1	59.7	48.1	45.7	50.2	59.0	50.6	50.1	52.8	62.6
	75	51.8	50.9	54.1	63.4	51.9	50.9	54.2	63.4	50.9	50.4	53.2	63.0
Ambient DB 65°F													
4000	60	30.7[a]	29.2[a]	34.0	55.8	34.9	33.8	38.3	59.7	39.2	38.9	42.9	63.6
	65	30.6[a]	29.1[a]	33.8	55.9	34.8	33.7	38.2	59.8	39.1	38.8	42.8	63.5
	70	30.6[a]	29.1[a]	33.9	55.9	34.7	33.6	38.2	59.9	39.0	38.7	42.8	63.6
	75	32.9[a]	31.1[a]	36.7	57.7	34.6	33.6	38.1	59.9	38.9	38.6	43.0	63.6
4800	60	33.8	32.2[a]	36.6	55.7	38.1	36.8	41.0	59.8	42.4	41.8	45.5	63.8
	65	33.8	32.1[a]	36.5	55.8	38.0	36.8	41.0	60.0	42.3	41.7	45.6	63.7
	70	33.7	32.2[a]	36.9	56.0	37.9	36.7	41.3	60.0	42.3	41.7	45.7	63.8
	75	37.5	35.5	41.0	59.1	37.8	36.6	40.9	60.1	42.2	41.6	45.9	63.9
5600	60	36.2	34.6	38.8	55.6	40.5	39.2	43.1	59.8	44.8	44.0	47.5	63.8
	65	36.1	34.5	38.5	55.7	40.4	39.1	43.2	59.9	44.7	44.0	47.6	63.8
	70	37.9	35.5	40.9	56.8	40.3	39.0	43.0	60.1	44.7	43.9	47.8	63.9
	75	41.2	39.1	44.4	60.3	41.3	39.0	44.5	60.2	44.6	43.8	48.0	64.0
6400	60	38.0	36.5	40.4	55.5	42.3	41.0	44.6	59.7	46.6	45.7	49.0	63.6
	65	37.9	36.3	40.1	55.6	42.2	40.9	44.8	59.9	46.6	45.7	49.2	63.7
	70	40.8	38.4	43.6	57.8	42.1	40.8	44.5	60.0	46.5	45.6	49.4	63.9
	75	44.2	42.2	47.2	61.3	44.3	42.3	47.3	61.4	46.4	45.6	49.6	64.0
7200	60	39.5	38.0	41.7	55.4	43.8	42.4	45.9	59.6	48.1	47.1	50.1	63.5
	65	39.5	37.9	41.9	55.5	43.7	42.4	46.1	59.8	48.0	47.1	50.4	63.7
	70	43.2	40.8	45.8	58.6	43.7	42.3	46.4	59.9	48.0	47.0	50.6	63.8
	75	46.7	44.7	49.5	62.2	46.8	44.8	49.6	62.3	47.9	47.0	50.8	64.0
8000	60	40.7	39.2	42.7	55.2	44.9	43.6	46.9	59.4	49.2	48.2	51.1	63.4
	65	40.7	39.3	43.0	55.6	44.9	43.6	47.1	59.7	49.2	48.2	51.3	63.6
	70	45.2	42.9	47.7	59.3	44.9	43.4	47.4	59.4	49.1	48.2	51.6	63.8
	75	48.9	46.9	51.5	63.0	48.9	47.0	51.6	63.0	49.2	48.2	51.9	64.0
8800	60	41.6	40.3	43.1	55.1	45.9	44.6	47.7	59.3	50.2	49.2	51.8	63.2
	65	43.2	40.3	45.4	55.5	45.8	44.6	48.0	59.6	50.1	49.2	52.1	63.5
	70	47.0	44.7	49.3	59.9	47.0	44.7	49.4	59.9	50.1	49.1	52.4	63.7
	75	50.7	48.8	53.2	63.7	50.8	48.9	53.3	63.7	50.3	49.3	52.8	64.1
9600	60	42.4	41.1	44.3	55.0	46.7	45.5	48.4	59.2	51.0	50.0	52.5	63.1
	65	44.7	41.2	46.7	55.5	46.6	45.4	48.7	59.5	50.9	50.0	52.8	63.4
	70	48.5	46.3	50.7	60.5	48.6	45.7	50.8	59.9	50.9	49.9	53.1	63.7
	75	52.3	50.5	54.7	64.3	52.4	50.6	54.8	64.4	52.5	50.2	54.9	64.1
Ambient DB 70°F													
4000	60	31.2[a]	29.2[a]	34.7	57.1	35.4	33.7	38.9	61.3	39.7	38.7	43.7	65.4
	65	31.1[a]	29.1[a]	34.5	57.1	35.3	33.6	38.9	61.4	39.6	38.6	43.6	65.3
	70	31.2[a]	29.1[a]	34.9	57.2	35.2	33.5	38.9	61.2	39.6	38.6	43.6	65.4
	75	33.7	31.1[a]	37.6	59.1	35.2	33.5	38.8	61.5	39.5	38.5	43.5	65.4

Table 17. Reheat temperature rise — 20 tons (continued)

Airflow (cfm)	Ent DB (°F)	Entering Wet Bulb (°F)											
		51				55				59			
		Lvg Evap DB (°F)		Lvg Reheat DB (°F)		Lvg Evap DB (°F)		Lvg Reheat DB (°F)		Lvg Evap DB (°F)		Lvg Reheat DB (°F)	
		MIN	MAX	MIN	MAX	MIN	MAX	MIN	MAX	MIN	MAX	MIN	MAX
4800	60	34.3	32.2[a]	37.2	56.8	38.6	36.8	41.6	61.2	42.9	41.6	46.3	65.4
	65	34.2	32.1[a]	37.1	56.9	38.5	36.7	41.6	61.3	42.8	41.6	46.2	65.3
	70	35.0	32.2[a]	38.4	57.0	38.4	36.7	41.5	61.4	42.7	41.5	46.4	65.4
	75	38.2	35.5	41.8	60.4	38.2	36.6	41.5	61.4	42.7	41.4	46.5	65.5
5600	60	36.6	34.6	39.3	56.5	40.9	39.1	43.6	60.9	45.2	43.8	48.0	65.1
	65	36.5	34.6	39.4	56.6	40.8	39.1	43.8	61.1	45.2	43.8	48.2	65.2
	70	38.5	35.6	41.6	57.8	40.7	39.0	43.9	61.2	45.1	43.7	48.4	65.4
	75	41.8	39.1	45.2	61.5	41.9	39.0	45.3	61.4	45.0	43.7	48.5	65.5
6400	60	38.4	36.5	40.8	56.3	42.7	41.0	45.1	60.7	47.0	45.6	49.5	64.9
	65	38.4	36.4	41.1	56.5	42.6	40.9	45.3	60.9	46.9	45.5	49.7	65.1
	70	41.4	38.5	44.3	58.7	42.5	40.8	45.5	61.0	46.9	45.5	49.9	65.2
	75	44.8	42.1	48.0	62.4	44.9	42.2	48.1	62.5	46.8	45.4	50.0	65.4
7200	60	39.8	38.1	42.1	56.1	44.1	42.5	46.3	60.5	48.4	47.0	50.6	64.7
	65	39.8	38.0	42.3	56.4	44.0	42.4	46.5	60.7	48.3	47.0	50.8	64.8
	70	43.7	40.9	46.5	59.4	44.0	42.3	46.8	60.9	48.3	46.9	51.1	65.1
	75	47.3	44.6	50.3	63.3	47.4	44.7	50.4	63.3	48.3	46.9	51.4	65.2
8000	60	41.0	39.3	42.7	55.9	45.2	43.7	47.2	60.2	49.5	48.1	51.5	64.4
	65	42.1	39.3	44.4	56.2	45.2	43.6	47.5	60.5	49.5	48.1	51.7	64.6
	70	45.8	43.0	48.3	60.1	45.2	43.7	47.8	60.8	49.4	48.1	52.0	64.9
	75	49.4	46.8	52.2	64.0	49.5	46.9	52.3	64.0	49.5	48.1	52.4	65.1
8800	60	41.9	40.3	43.9	55.7	46.2	44.7	48.0	60.0	50.5	49.1	52.2	64.2
	65	43.7	40.4	45.9	56.2	46.1	44.6	48.3	60.3	50.4	49.1	52.5	64.5
	70	47.5	44.8	49.9	60.7	47.6	44.8	50.0	60.7	50.3	49.0	52.8	64.7
	75	51.3	48.7	53.9	64.6	51.3	48.8	54.0	64.7	50.6	49.2	53.2	65.1
9600	60	42.7	41.2	44.6	55.6	47.0	45.5	48.7	59.8	51.2	49.9	52.8	64.0
	65	45.1	42.5	47.2	57.1	46.9	45.5	49.0	60.1	51.2	49.9	53.1	64.3
	70	49.0	46.4	51.3	61.2	49.1	45.7	51.3	60.6	51.1	49.9	53.5	64.6
	75	52.8	50.3	55.4	65.2	52.9	50.4	55.4	65.2	53.0	50.1	55.5	65.0

Note: MIN, MAX: The leaving evaporator temperature is affected by the modulating valve position. The MIN and MAX numbers represent modulating valve position impact on both the leaving evaporator temperature and the leaving reheat coil temperature. MAX represents wide open, MIN represents closed to minimum position.

[a] The unit might be tripped by Frostat at these conditions due to low leaving evaporator air temperature.

Table 18. Reheat temperature rise — 25 tons

Airflow (cfm)	Ent DB (°F)	Entering Wet Bulb (°F)											
		51				55				59			
		Lvg Evap DB (°F)		Lvg Reheat DB (°F)		Lvg Evap DB (°F)		Lvg Reheat DB (°F)		Lvg Evap DB (°F)		Lvg Reheat DB (°F)	
		MIN	MAX	MIN	MAX	MIN	MAX	MIN	MAX	MIN	MAX	MIN	MAX
Ambient DB 60°F													
5000	60	31.8[a]	30.9[a]	33.8	53.1	36.3	35.2	38.2	56.9	40.8	39.8	43.0	60.6
	65	31.7[a]	30.8[a]	33.9	53.2	36.2	35.1	38.3	57.0	40.8	39.7	42.9	60.5
	70	31.5[a]	30.6[a]	33.7	53.0	36.1	35.0	38.4	56.9	40.7	39.6	43.0	60.5
	75	34.6	33.1	37.1	55.5	36.0	34.9	38.5	57.1	40.6	39.5	43.1	60.4

Table 18. Reheat temperature rise — 25 tons (continued)

Airflow (cfm)	Ent DB (°F)	Entering Wet Bulb (°F)											
		51				55				59			
		Lvg Evap DB (°F)		Lvg Reheat DB (°F)		Lvg Evap DB (°F)		Lvg Reheat DB (°F)		Lvg Evap DB (°F)		Lvg Reheat DB (°F)	
		MIN	MAX	MIN	MAX	MIN	MAX	MIN	MAX	MIN	MAX	MIN	MAX
6000	60	35.0	33.9	36.7	53.3	39.4	38.3	41.1	57.3	44.0	42.8	45.5	61.1
	65	34.9	33.8	36.8	53.5	39.4	38.2	41.2	57.4	43.9	42.7	45.7	61.0
	70	36.0	33.8	38.1	53.7	39.3	38.1	41.4	57.5	43.9	42.6	45.9	61.0
	75	39.5	37.6	41.7	57.3	39.4	38.2	41.6	57.7	43.8	42.6	46.0	61.3
7000	60	37.3	36.2	38.9	53.5	41.8	40.6	43.1	57.5	46.3	45.1	47.5	61.3
	65	37.2	36.1	39.0	53.7	41.7	40.5	43.4	57.7	46.2	45.0	47.7	61.3
	70	39.7	37.8	41.6	55.5	41.6	40.4	43.5	57.8	46.2	44.9	48.0	61.5
	75	43.4	41.3	45.4	58.7	43.5	40.5	45.5	58.1	46.1	44.9	48.1	61.7
8000	60	39.1	38.0	40.5	53.7	43.5	42.3	44.7	57.6	48.0	46.8	49.0	61.5
	65	39.2	37.8	40.8	53.5	43.4	42.3	45.0	57.8	48.0	46.8	49.3	61.5
	70	42.7	40.7	44.4	56.6	43.6	42.2	45.4	58.0	47.9	46.7	49.6	61.7
	75	46.5	38.4	48.4	53.9	46.6	44.3	48.4	60.0	47.9	46.7	49.8	61.9
9000	60	40.5	39.4	41.8	53.7	44.9	43.7	46.0	57.7	49.3	48.2	50.2	61.5
	65	40.7	39.6	42.2	54.1	44.8	43.7	46.3	57.9	49.3	48.1	50.5	61.5
	70	45.2	43.1	46.8	57.6	45.1	43.9	46.7	58.3	49.3	48.1	50.8	61.9
	75	49.1	41.3	50.8	52.7	49.2	46.8	50.9	61.0	49.6	48.1	51.3	62.1
10000	60	41.6	40.5	42.8	53.8	46.0	44.9	47.0	57.7	50.4	49.3	51.1	61.5
	65	43.3	40.8	44.6	54.3	45.9	44.8	47.3	58.0	50.4	49.2	51.5	61.7
	70	47.3	45.1	48.8	58.4	46.4	45.1	47.8	58.5	50.3	49.2	51.8	62.0
	75	51.3	42.8	52.9	53.5	51.4	49.0	53.0	62.0	50.8	49.6	52.4	62.5
11000	60	42.5	41.5	43.7	53.8	46.9	45.8	47.8	57.7	51.3	50.2	51.9	61.5
	65	44.9	41.8	46.2	54.4	46.9	45.8	48.2	58.1	51.3	50.1	52.3	61.8
	70	49.1	46.8	50.4	59.2	49.1	46.2	50.5	58.6	51.3	50.0	52.7	61.5
	75	53.2	50.8	54.6	62.8	53.3	50.8	54.7	62.8	53.3	50.6	54.8	62.6
12000	60	43.3	42.4	44.5	53.8	47.6	46.6	48.5	57.7	52.0	51.0	52.5	61.5
	65	46.4	44.5	47.6	56.0	47.7	46.6	48.9	58.1	52.0	50.9	53.0	61.8
	70	50.6	48.4	51.9	59.8	50.7	47.1	51.9	58.7	51.9	51.0	52.8	62.2
	75	54.8	45.4	56.2	54.4	54.9	45.4	56.2	58.2	54.9	51.5	56.3	62.8
Ambient DB 65°F													
5000	60	32.0[a]	31.0[a]	34.1	54.3	36.5	35.4	38.5	58.3	41.1	39.9	43.3	62.3
	65	31.9[a]	30.9[a]	34.2	54.4	36.4	35.3	38.7	58.4	41.1	39.8	43.2	62.3
	70	32.1[a]	31.0[a]	34.4	54.6	36.3	35.2	38.8	58.5	41.0	39.7	43.3	62.2
	75	35.0	33.4	37.6	56.9	36.3	35.1	38.8	58.6	40.9	39.6	43.5	62.2
6000	60	35.2	34.0	37.0	54.4	39.7	38.4	41.4	58.6	44.2	42.9	45.8	62.5
	65	35.1	33.9	37.1	54.5	39.6	38.3	41.5	58.7	44.2	42.8	46.0	62.6
	70	36.4	33.9	38.5	54.8	39.5	38.2	41.7	58.8	44.1	42.7	46.2	62.7
	75	39.9	37.8	42.2	58.6	39.6	38.3	41.9	59.1	44.0	42.6	46.3	62.5
7000	60	37.5	36.3	39.1	54.4	42.0	40.7	43.4	58.6	46.5	45.1	47.8	62.6
	65	37.4	36.2	39.2	54.6	41.9	40.6	43.6	58.8	46.4	45.1	48.0	62.8
	70	40.1	38.0	42.0	56.6	41.8	40.5	43.8	59.0	46.4	45.0	48.2	62.9
	75	43.7	41.4	45.8	60.0	43.8	40.6	45.9	59.3	46.3	44.9	48.4	63.1

Table 18. Reheat temperature rise — 25 tons (continued)

Airflow (cfm)	Ent DB (°F)	Entering Wet Bulb (°F)											
		51				55				59			
		Lvg Evap DB (°F)		Lvg Reheat DB (°F)		Lvg Evap DB (°F)		Lvg Reheat DB (°F)		Lvg Evap DB (°F)		Lvg Reheat DB (°F)	
		MIN	MAX	MIN	MAX	MIN	MAX	MIN	MAX	MIN	MAX	MIN	MAX
8000	60	39.3	38.1	40.7	54.4	43.7	42.4	45.0	58.6	48.2	46.9	49.2	62.6
	65	39.4	38.2	41.1	54.8	43.6	42.4	45.2	58.8	48.2	46.8	49.5	62.8
	70	43.0	40.8	44.8	57.6	43.8	42.3	45.6	59.1	48.1	46.7	49.8	63.0
	75	46.9	44.4	48.8	61.2	47.0	44.5	48.9	61.2	48.1	46.7	50.0	63.2
9000	60	40.6	39.5	42.0	54.4	45.0	43.8	46.2	58.6	49.5	48.2	50.4	62.7
	65	40.9	39.7	42.4	54.9	45.0	43.8	46.5	58.8	49.5	48.2	50.7	62.8
	70	45.5	43.2	47.1	58.6	45.3	44.0	46.9	59.3	49.4	48.1	51.0	63.1
	75	49.5	46.9	51.2	62.2	49.6	47.0	51.3	62.2	49.8	48.2	51.5	63.3
10000	60	41.7	40.6	43.0	54.4	46.1	44.9	47.1	58.5	50.6	49.3	51.4	62.5
	65	43.5	40.9	44.9	54.9	46.1	44.9	47.5	58.8	50.5	49.3	51.7	62.8
	70	47.6	45.2	49.1	59.4	46.5	45.2	48.0	59.3	50.5	49.2	52.0	63.1
	75	51.7	49.0	53.3	63.1	51.8	49.1	53.4	63.1	51.0	49.6	52.6	63.5
11000	60	42.6	41.6	43.9	54.4	47.0	45.9	48.0	58.4	51.4	50.2	52.0	62.4
	65	45.2	41.9	46.5	55.0	47.0	45.8	48.3	58.8	51.4	50.2	52.5	62.7
	70	49.3	47.0	50.8	60.1	49.4	46.2	50.8	59.4	51.4	50.2	52.9	63.1
	75	53.5	50.8	55.0	63.8	53.6	50.9	55.1	63.8	53.7	50.6	55.2	63.6
12000	60	43.7	42.4	44.9	54.4	47.8	46.7	48.6	58.4	52.2	51.0	52.6	62.3
	65	46.6	44.6	47.9	56.7	47.8	46.7	49.1	58.8	52.1	50.9	53.1	62.7
	70	50.9	48.5	52.2	60.7	50.9	47.1	52.3	59.5	52.2	51.0	53.6	63.1
	75	55.1	52.4	56.5	64.5	55.2	52.5	56.6	64.5	55.3	51.5	56.7	63.7
Ambient DB 70°F													
5000	60	32.3[a]	31.2[a]	34.4	55.3	36.8	35.6	38.9	59.6	41.4	40.0	43.7	63.9
	65	32.1[a]	31.1[a]	34.5	55.4	36.7	35.4	39.0	59.7	41.4	40.0	43.6	63.9
	70	32.3[a]	31.2[a]	34.7	55.6	36.6	35.3	39.1	59.8	41.3	39.9	43.7	64.0
	75	35.5	33.6	38.0	58.2	36.5	35.3	38.8	59.9	41.2	39.8	43.8	64.0
6000	60	35.4	34.2	37.2	55.3	39.9	38.6	41.6	59.7	44.5	43.0	46.1	63.8
	65	35.3	34.1	37.4	55.4	39.8	38.5	41.8	59.8	44.4	43.0	46.3	64.0
	70	36.8	34.1	38.9	55.7	39.7	38.4	42.0	59.9	44.4	42.9	46.5	64.1
	75	40.3	38.1	42.7	59.8	39.9	38.5	42.2	60.2	44.3	42.8	46.6	64.3
7000	60	37.7	36.5	39.3	55.2	42.2	40.8	43.7	59.6	46.7	45.2	48.1	63.8
	65	37.8	36.3	39.7	55.4	42.1	40.7	43.9	59.8	46.7	45.2	48.3	64.0
	70	40.4	38.2	42.4	57.5	42.0	40.6	44.0	60.0	46.6	45.1	48.5	64.1
	75	44.1	41.6	46.3	61.1	44.2	40.7	46.3	60.3	46.5	45.0	48.7	64.3
8000	60	39.4	38.2	40.9	55.1	43.9	42.6	45.2	59.5	48.4	47.0	49.5	63.6
	65	39.6	38.3	41.3	55.5	43.8	42.5	45.5	59.7	48.3	46.9	49.8	63.9
	70	43.4	41.0	45.2	58.5	44.0	42.4	45.8	59.9	48.3	46.8	50.1	64.1
	75	47.3	44.6	49.2	62.2	47.4	44.7	49.3	62.3	48.5	46.8	50.5	64.3
9000	60	40.8	39.6	42.2	55.1	45.2	43.9	46.4	59.3	49.7	48.3	50.6	63.5
	65	41.0	39.8	42.6	55.5	45.1	43.8	46.7	59.6	49.7	48.2	50.9	63.7
	70	45.8	43.4	47.5	59.4	45.5	44.1	47.1	60.1	49.6	48.2	51.2	64.0
	75	49.9	47.0	51.7	63.2	49.9	47.1	51.7	63.2	50.0	48.2	51.8	64.3

Table 18. Reheat temperature rise — 25 tons (continued)

Airflow (cfm)	Ent DB (°F)	Entering Wet Bulb (°F)											
		51				55				59			
		Lvg Evap DB (°F)		Lvg Reheat DB (°F)		Lvg Evap DB (°F)		Lvg Reheat DB (°F)		Lvg Evap DB (°F)		Lvg Reheat DB (°F)	
		MIN	MAX	MIN	MAX	MIN	MAX	MIN	MAX	MIN	MAX	MIN	MAX
10000	60	41.9	40.7	43.2	55.0	46.3	45.0	47.3	59.2	50.7	49.4	51.5	63.3
	65	43.8	41.0	45.2	55.5	46.2	45.0	47.7	59.5	50.7	49.3	51.9	63.6
	70	47.9	45.4	49.4	60.1	48.0	45.3	49.5	60.1	50.6	49.3	52.2	63.9
	75	52.0	49.1	53.7	64.0	52.1	49.2	53.8	64.0	51.2	49.7	52.8	64.5
11000	60	42.8	41.7	44.1	54.9	47.2	46.0	48.1	59.0	51.6	50.3	52.2	63.1
	65	45.5	43.3	46.8	56.7	47.1	45.9	48.5	59.4	51.5	50.2	52.6	63.5
	70	49.6	47.1	51.1	60.8	49.7	46.3	51.1	60.1	51.6	50.2	53.0	63.9
	75	53.9	50.9	55.4	64.7	53.9	51.0	55.5	64.7	54.0	50.7	55.6	64.5
12000	60	43.8	42.5	45.0	54.8	47.9	46.7	48.8	58.9	52.3	51.1	52.8	63.0
	65	46.9	44.7	48.1	57.3	47.9	46.8	49.2	59.4	52.3	51.0	53.3	63.4
	70	51.1	48.6	52.5	61.4	51.2	48.7	52.6	61.4	52.2	51.1	53.2	63.8
	75	55.4	52.5	56.9	65.4	55.5	52.6	57.0	65.4	55.6	51.6	57.1	64.5

Note: MIN, MAX: The leaving evaporator temperature is affected by the modulating valve position. The MIN and MAX numbers represent modulating valve position impact on both the leaving evaporator temperature and the leaving reheat coil temperature. MAX represents wide open, MIN represents closed to minimum position.

(a) The unit might be tripped by Frostat at these conditions due to low leaving evaporator air temperature.

Evaporator Fan Performance - Heat Pump

Fan Curve Limits:

- WHJ150–300 Std Motor, Max 5.8 hp or 1850 rpm
- WHJ300 High static, Max 8.4 hp or 1940 rpm
- Maximum CFM — 480 cfm/ton
- Maximum ESP = 2.0 in-H_2O @ 400 cfm/ton

The fan curve graphs include standard filter and a wet indoor coil. Available static pressure is reduced with options based on the accessory table component pressure drop. To determine available static pressure at rpm/cfm with other options/accessories, select intersection point of the RPM vs CFM and then reduce available static pressure shown in graph by the sum of additional option static pressure drop listed in the fan performance accessory table section. For more detailed and precise RPM, BHP, and CFM operating points, see evaporator tables below.

12.5 to 25 Ton Units — Downflow

Figure 1. Fan curves — 12.5 to 25 tons, WHJ* downflow

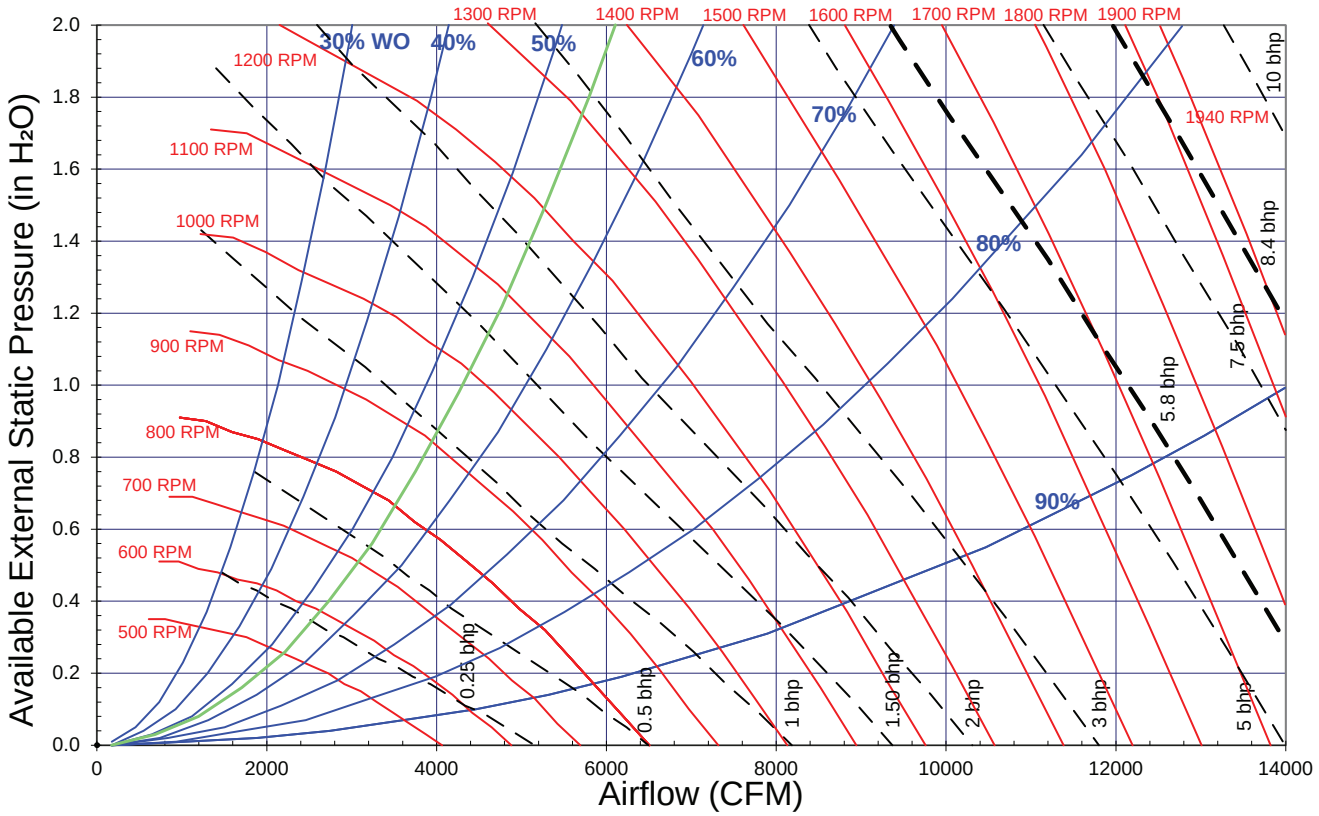

Table 19. Evaporator fan performance — 12.5 ton, model WHJ, downflow

Available External Static Pressure (Inches of Water Gauge)																				
	0.10"		0.20"		0.30"		0.40"		0.50"		0.60"		0.70"		0.80"		0.90"		1.00"	
CFM	RPM	BHP	RPM	BHP	RPM	BHP	RPM	BHP	RPM	BHP	RPM	BHP	RPM	BHP	RPM	BHP	RPM	BHP	RPM	BHP
3750	541	0.19	604	0.28	661	0.37	713	0.47	761	0.58	807	0.69	850	0.80	891	0.91	930	1.03	968	1.16
4000	568	0.21	629	0.31	684	0.41	734	0.51	781	0.62	825	0.74	868	0.85	908	0.97	947	1.10	983	1.22
4500	625	0.28	679	0.38	731	0.49	779	0.61	823	0.73	866	0.85	905	0.97	944	1.10	982	1.23	1018	1.37
5000	683	0.35	732	0.47	780	0.58	826	0.71	868	0.84	908	0.97	947	1.11	983	1.24	1018	1.38	1053	1.53
5500	742	0.45	786	0.57	831	0.69	874	0.83	915	0.97	953	1.11	989	1.26	1025	1.40	1059	1.55	1092	1.70
6000	801	0.55	842	0.68	883	0.82	924	0.96	962	1.11	999	1.26	1035	1.42	1068	1.58	1102	1.74	1133	1.90
Available External Static Pressure (Inches of Water Gauge)																				
	1.10"		1.20"		1.30"		1.40"		1.50"		1.60"		1.70"		1.80"		1.90"		2.00"	
CFM	RPM	BHP	RPM	BHP	RPM	BHP	RPM	BHP	RPM	BHP	RPM	BHP	RPM	BHP	RPM	BHP	RPM	BHP	RPM	BHP
3750	1005	1.29	1040	1.43	1074	1.57	1106	1.71	1137	1.86	1168	2	1198	2.15	1228	2.31	1257	2.46	1285	2.62
4000	1019	1.36	1054	1.5	1088	1.64	1120	1.79	1152	1.94	1182	2.09	1211	2.24	1240	2.4	1269	2.56	1297	2.72
4500	1052	1.51	1085	1.65	1117	1.79	1149	1.95	1180	2.1	1211	2.26	1240	2.43	1268	2.59	1296	2.76	1323	2.93
5000	1087	1.67	1120	1.82	1151	1.98	1182	2.13	1211	2.29	1240	2.45	1269	2.62	1297	2.79	1325	2.97	1352	3.15
5500	1123	1.86	1155	2.02	1186	2.18	1216	2.34	1246	2.51	1274	2.68	1302	2.85	1328	3.02	1354	3.2	1381	3.38
6000	1164	2.06	1194	2.23	1223	2.4	1252	2.57	1281	2.74	1309	2.92	1336	3.1	1363	3.28	1389	3.47	1414	3.66

Notes:

1. Available External Static Pressure is the static pressure difference between the return duct and the supply duct plus the static pressure drop caused by accessories and options.
2. Data includes pressure drop due to standard filters and wet coils. No accessories or options are included in pressure drop data.
3. To determine static pressure drop due to other options/accessories, refer to the applicable table in the fan performance section.
4. Direct drive fan motor heat is negligible.
5. Factory supplied motors, in commercial equipment, are definite purpose motors, specifically designed and tested to operate reliably and continuously at all cataloged conditions. Using the full horsepower range of our fan motors as shown in our tabular data will not result in nuisance tripping or premature motor failure. Our product's warranty will not be affected.

Table 20. Evaporator fan performance — 15 ton, model WHJ, downflow

Available External Static Pressure (Inches of Water Gauge)																				
	0.10"		0.20"		0.30"		0.40"		0.50"		0.60"		0.70"		0.80"		0.90"		1.00"	
CFM	RPM	BHP	RPM	BHP	RPM	BHP	RPM	BHP	RPM	BHP	RPM	BHP	RPM	BHP	RPM	BHP	RPM	BHP	RPM	BHP
4500	625	0.28	679	0.38	731	0.49	779	0.61	823	0.73	866	0.85	905	0.97	944	1.10	982	1.23	1018	1.37
4800	660	0.32	711	0.43	760	0.54	807	0.67	850	0.79	891	0.92	930	1.05	967	1.18	1003	1.32	1039	1.46
5400	730	0.43	775	0.54	821	0.67	864	0.80	905	0.94	944	1.08	981	1.22	1017	1.37	1051	1.52	1084	1.67
6000	801	0.55	842	0.68	883	0.82	924	0.96	962	1.11	999	1.26	1035	1.42	1068	1.58	1102	1.74	1133	1.90
6600	873	0.71	911	0.85	948	1.00	985	1.15	1022	1.31	1057	1.47	1091	1.63	1123	1.81	1155	1.98	1185	2.16
7200	945	0.89	981	1.04	1014	1.20	1049	1.36	1083	1.53	1116	1.70	1148	1.88	1180	2.06	1210	2.25	1239	2.43
Available External Static Pressure (Inches of Water Gauge)																				
	1.10"		1.20"		1.30"		1.40"		1.50"		1.60"		1.70"		1.80"		1.90"		2.00"	
CFM	RPM	BHP	RPM	BHP	RPM	BHP	RPM	BHP	RPM	BHP	RPM	BHP	RPM	BHP	RPM	BHP	RPM	BHP	RPM	BHP
4500	1052	1.51	1085	1.65	1117	1.79	1149	1.95	1180	2.1	1211	2.26	1240	2.43	1268	2.59	1296	2.76	1323	2.93
4800	1073	1.61	1106	1.75	1137	1.90	1168	2.05	1198	2.21	1228	2.37	1257	2.54	1286	2.71	1313	2.88	1340	3.06
5400	1115	1.82	1148	1.98	1179	2.14	1209	2.3	1239	2.46	1267	2.63	1295	2.80	1322	2.97	1348	3.15	1375	3.33
6000	1164	2.06	1194	2.23	1223	2.40	1252	2.57	1281	2.74	1309	2.92	1336	3.10	1363	3.28	1389	3.47	1414	3.66
6600	1215	2.33	1244	2.51	1272	2.69	1300	2.87	1326	3.05	1352	3.24	1379	3.43	1405	3.62	1431	3.82	1456	4.02
7200	1268	2.63	1295	2.82	1323	3.01	1350	3.2	1376	3.4	1401	3.6	1426	3.79	1450	4.00	1474	4.2	1498	4.41

Notes:

1. Available External Static Pressure is the static pressure difference between the return duct and the supply duct plus the static pressure drop caused by accessories and options.
2. Data includes pressure drop due to standard filters and wet coils. No accessories or options are included in pressure drop data.
3. To determine static pressure drop due to other options/accessories, refer to the applicable table in the fan performance section.
4. Direct drive fan motor heat is negligible.
5. Factory supplied motors, in commercial equipment, are definite purpose motors, specifically designed and tested to operate reliably and continuously at all cataloged conditions. Using the full horsepower range of our fan motors as shown in our tabular data will not result in nuisance tripping or premature motor failure. Our product's warranty will not be affected.

Evaporator Fan Performance - Heat Pump

Table 21. Evaporator fan performance — 20 ton, model WHJ, downflow

Available External Static Pressure (Inches of Water Gauge)																				
	0.10"		0.20"		0.30"		0.40"		0.50"		0.60"		0.70"		0.80"		0.90"		1.00"	
CFM	RPM	BHP	RPM	BHP	RPM	BHP	RPM	BHP	RPM	BHP	RPM	BHP	RPM	BHP	RPM	BHP	RPM	BHP	RPM	BHP
6000	785	0.51	827	0.64	868	0.77	907	0.91	945	1.05	981	1.20	1016	1.35	1049	1.50	1081	1.65	1112	1.80
6400	831	0.61	872	0.74	911	0.88	948	1.02	984	1.17	1019	1.33	1053	1.48	1085	1.64	1116	1.80	1146	1.96
7200	925	0.83	962	0.97	997	1.13	1031	1.28	1064	1.45	1096	1.61	1128	1.79	1158	1.96	1188	2.14	1217	2.32
8000	1020	1.09	1054	1.26	1086	1.42	1117	1.60	1148	1.77	1177	1.95	1206	2.14	1235	2.33	1263	2.52	1290	2.72
8800	1115	1.42	1146	1.60	1176	1.78	1205	1.96	1233	2.15	1261	2.35	1288	2.55	1314	2.75	1341	2.96	1367	3.17
9600	1211	1.81	1240	2.00	1268	2.20	1295	2.39	1321	2.60	1347	2.81	1372	3.02	1397	3.24	1421	3.46	1445	3.68
Available External Static Pressure (Inches of Water Gauge)																				
	1.10"		1.20"		1.30"		1.40"		1.50"		1.60"		1.70"		1.80"		1.90"		2.00"	
CFM	RPM	BHP	RPM	BHP	RPM	BHP	RPM	BHP	RPM	BHP	RPM	BHP	RPM	BHP	RPM	BHP	RPM	BHP	RPM	BHP
6000	1141	1.95	1170	2.1	1198	2.25	1227	2.41	1255	2.57	1282	2.74	1308	2.9	1333	3.07	1358	3.24	1383	3.41
6400	1175	2.12	1203	2.28	1231	2.44	1257	2.6	1284	2.77	1311	2.94	1337	3.11	1362	3.29	1387	3.46	1411	3.64
7200	1245	2.49	1272	2.67	1299	2.85	1324	3.03	1349	3.21	1374	3.39	1397	3.57	1421	3.76	1445	3.95	1469	4.14
8000	1317	2.91	1343	3.11	1369	3.31	1394	3.5	1418	3.7	1442	3.9	1465	4.1	1487	4.31	1510	4.5	1532	4.7
8800	1392	3.38	1417	3.59	1442	3.81	1466	4.02	1489	4.24	1512	4.46	1534	4.68	1557	4.89	1578	5.11	1599	5.33
9600	1469	3.9	1493	4.13	1517	4.37	1539	4.6	1562	4.83	1584	5.07	1606	5.31	1627	5.54	1648	5.78	-	-

Notes:

1. Available External Static Pressure is the static pressure difference between the return duct and the supply duct plus the static pressure drop caused by accessories and options.
2. Data includes pressure drop due to standard filters and wet coils. No accessories or options are included in pressure drop data.
3. To determine static pressure drop due to other options/accessories, refer to the applicable table in the fan performance section.
4. Direct drive fan motor heat is negligible.
5. Factory supplied motors, in commercial equipment, are definite purpose motors, specifically designed and tested to operate reliably and continuously at all cataloged conditions. Using the full horsepower range of our fan motors as shown in our tabular data will not result in nuisance tripping or premature motor failure. Our product's warranty will not be affected.

Table 22. Evaporator fan performance — 25 ton, model WHJ, downflow

Available External Static Pressure (Inches of Water Gauge)																				
	0.10"		0.20"		0.30"		0.40"		0.50"		0.60"		0.70"		0.80"		0.90"		1.00"	
CFM	RPM	BHP	RPM	BHP	RPM	BHP	RPM	BHP	RPM	BHP	RPM	BHP	RPM	BHP	RPM	BHP	RPM	BHP	RPM	BHP
	3-hp Standard Motor																			
7500	961	0.92	996	1.07	1030	1.23	1063	1.40	1095	1.56	1126	1.74	1157	1.91	1187	2.09	1216	2.28	1244	2.46
8000	1020	1.09	1054	1.26	1086	1.42	1117	1.60	1148	1.77	1177	1.95	1206	2.14	1235	2.33	1263	2.52	1290	2.72
9000	1139	1.51	1170	1.69	1199	1.88	1227	2.06	1255	2.26	1282	2.46	1309	2.66	1335	2.87	1360	3.07	1386	3.29
10000	1259	2.02	1287	2.23	1314	2.43	1340	2.64	1365	2.84	1390	3.06	1415	3.28	1439	3.51	1463	3.73	1486	3.96
11000	1379	2.65	1405	2.87	1430	3.09	1454	3.32	1478	3.54	1501	3.77	1523	4.01	1546	4.25	1568	4.50	1590	4.75
12000	1500	3.39	1524	3.63	1547	3.87	1570	4.12	1592	4.37	1613	4.61	1634	4.86	1655	5.12	1676	5.39	1696	5.65
Available External Static Pressure (Inches of Water Gauge)																				
	1.10"		1.20"		1.30"		1.40"		1.50"		1.60"		1.70"		1.80"		1.90"		2.00"	
CFM	RPM	BHP	RPM	BHP	RPM	BHP	RPM	BHP	RPM	BHP	RPM	BHP	RPM	BHP	RPM	BHP	RPM	BHP	RPM	BHP
	3-hp Standard Motor																			
7500	1272	2.65	1299	2.83	1325	3.02	1350	3.2	1375	3.39	1399	3.58	1422	3.77	1446	3.96	1468	4.15	1491	4.34
8000	1317	2.91	1343	3.11	1369	3.31	1394	3.5	1418	3.7	1442	3.9	1465	4.1	1487	4.31	1510	4.5	1532	4.7
9000	1411	3.5	1436	3.72	1460	3.94	1484	4.16	1507	4.38	1530	4.61	1552	4.83	1574	5.05	1596	5.27	1617	5.5
10000	1509	4.19	1532	4.43	1555	4.67	1577	4.91	1599	5.15	1621	5.4	1643	5.64	-	-	-	-	-	-
11000	1611	4.99	1633	5.25	1653	5.5	1674	5.76	-	-	-	-	-	-	-	-	-	-	-	-
12000	-	-	-	-	-	-	-	-	-	-	-	-	-	-	-	-	-	-	-	-

Notes:

1. Available External Static Pressure is the static pressure difference between the return duct and the supply duct plus the static pressure drop caused by accessories and options.
2. Data includes pressure drop due to standard filters and wet coils. No accessories or options are included in pressure drop data.
3. To determine static pressure drop due to other options/accessories, refer to the applicable table in the fan performance section.
4. Direct drive fan motor heat is negligible.
5. Factory supplied motors, in commercial equipment, are definite purpose motors, specifically designed and tested to operate reliably and continuously at all cataloged conditions. Using the full horsepower range of our fan motors as shown in our tabular data will not result in nuisance tripping or premature motor failure. Our product's warranty will not be affected.

Table 23. Evaporator fan performance — 25 ton, downflow, model WHJ, high static drive

Available External Static Pressure (Inches of Water Gauge)																				
	0.10"		0.20"		0.30"		0.40"		0.50"		0.60"		0.70"		0.80"		0.90"		1.00"	
CFM	RPM	BHP	RPM	BHP	RPM	BHP	RPM	BHP	RPM	BHP	RPM	BHP	RPM	BHP	RPM	BHP	RPM	BHP	RPM	BHP
	5-hp Oversized Motor																			
7500	983	0.94	1019	1.10	1053	1.26	1086	1.42	1117	1.59	1148	1.76	1179	1.94	1209	2.11	1238	2.29	1266	2.47
8000	1044	1.12	1078	1.28	1110	1.45	1142	1.63	1171	1.80	1200	1.98	1230	2.17	1259	2.36	1287	2.55	1314	2.74
9000	1166	1.55	1197	1.73	1226	1.92	1255	2.11	1283	2.30	1309	2.50	1335	2.70	1361	2.91	1387	3.12	1413	3.33
10000	1289	2.08	1317	2.28	1344	2.48	1370	2.69	1396	2.91	1421	3.12	1445	3.34	1468	3.56	1491	3.79	1515	4.02
11000	1412	2.72	1438	2.94	1463	3.16	1487	3.39	1511	3.62	1534	3.86	1557	4.09	1579	4.33	1601	4.58	1622	4.82
12000	1535	3.48	1560	3.72	1583	3.97	1605	4.21	1628	4.46	1650	4.72	1671	4.97	1692	5.23	1712	5.49	1732	5.75
Available External Static Pressure (Inches of Water Gauge)																				
	1.10"		1.20"		1.30"		1.40"		1.50"		1.60"		1.70"		1.80"		1.90"		2.00"	
CFM	RPM	BHP	RPM	BHP	RPM	BHP	RPM	BHP	RPM	BHP	RPM	BHP	RPM	BHP	RPM	BHP	RPM	BHP	RPM	BHP
	5-hp Oversized Motor																			
7500	1294	2.66	1321	2.84	1346	3.03	1371	3.21	1396	3.4	1419	3.6	1442	3.79	1466	3.98	1489	4.18	1511	4.37
8000	1341	2.93	1367	3.12	1392	3.32	1417	3.52	1441	3.72	1464	3.92	1487	4.12	1509	4.32	1531	4.53	1553	4.74
9000	1438	3.54	1463	3.76	1487	3.97	1510	4.19	1534	4.41	1556	4.62	1579	4.85	1600	5.07	1622	5.29	1642	5.52
10000	1539	4.25	1562	4.49	1585	4.72	1607	4.96	1629	5.2	1651	5.43	1672	5.68	1693	5.92	1714	6.16	1734	6.4
11000	1643	5.07	1665	5.32	1686	5.58	1707	5.84	1728	6.1	1749	6.36	1769	6.61	1789	6.88	1809	7.14	1829	7.4
12000	1752	6.02	1771	6.28	1790	6.55	1810	6.83	1830	7.11	1850	7.39	1869	7.67	1888	7.96	1907	8.24	-	-

Notes:

1. Available External Static Pressure is the static pressure difference between the return duct and the supply duct plus the static pressure drop caused by accessories and options.
2. Data includes pressure drop due to standard filters and wet coils. No accessories or options are included in pressure drop data.
3. To determine static pressure drop due to other options/accessories, refer to the applicable table in the fan performance section.
4. Direct drive fan motor heat is negligible.
5. Factory supplied motors, in commercial equipment, are definite purpose motors, specifically designed and tested to operate reliably and continuously at all cataloged conditions. Using the full horsepower range of our fan motors as shown in our tabular data will not result in nuisance tripping or premature motor failure. Our product's warranty will not be affected.

12.5 to 25 Ton Units — Horizontal

Figure 2. Fan curves — 12.5 to 25 tons, WHJ horizontal

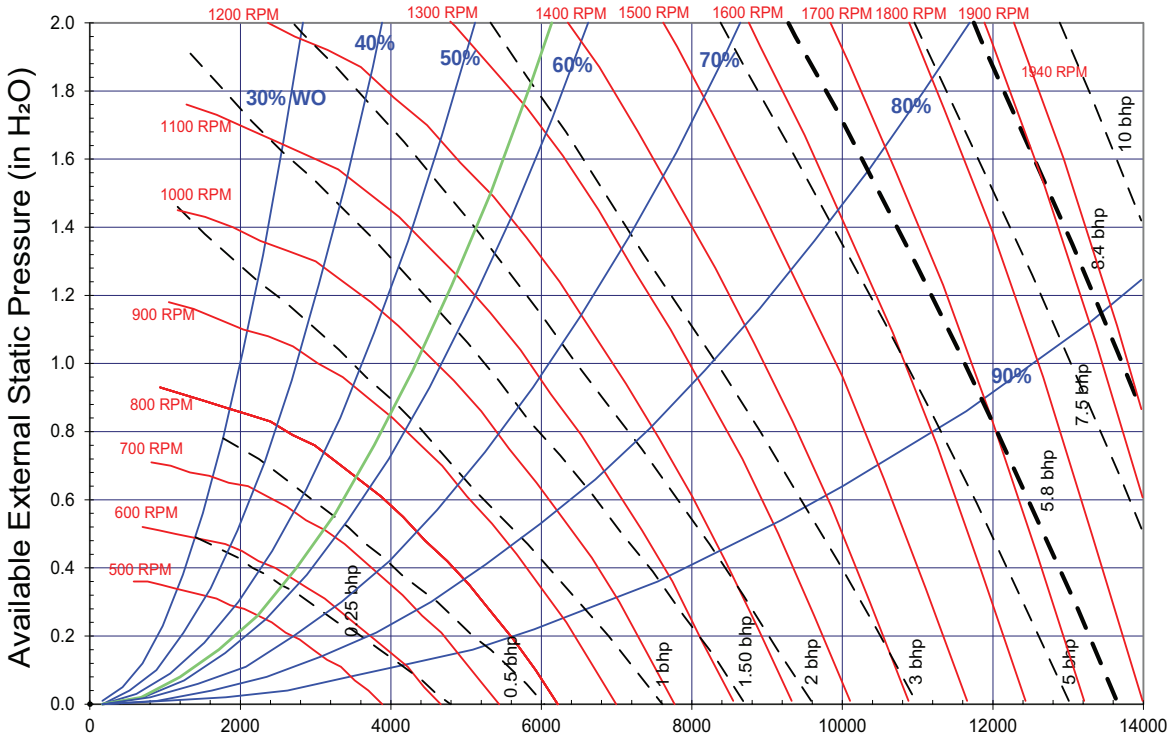

Evaporator Fan Performance - Heat Pump

Table 24. Evaporator fan performance — 12.5 ton, model WHJ, horizontal

Available External Static Pressure (Inches of Water Gauge)																				
	0.10"		0.20"		0.30"		0.40"		0.50"		0.60"		0.70"		0.80"		0.90"		1.00"	
CFM	RPM	BHP	RPM	BHP	RPM	BHP	RPM	BHP	RPM	BHP	RPM	BHP	RPM	BHP	RPM	BHP	RPM	BHP	RPM	BHP
3750	562	0.22	618	0.30	672	0.39	723	0.49	771	0.59	815	0.70	858	0.81	898	0.93	936	1.04	972	1.16
4000	592	0.25	646	0.34	696	0.44	745	0.54	792	0.65	835	0.76	877	0.87	916	0.99	954	1.11	990	1.24
4500	653	0.33	701	0.43	748	0.54	792	0.64	835	0.76	877	0.88	917	1.00	955	1.13	991	1.26	1027	1.39
5000	716	0.43	759	0.54	802	0.65	843	0.77	882	0.89	922	1.02	959	1.15	996	1.29	1031	1.43	1065	1.57
5500	779	0.55	819	0.67	858	0.79	896	0.92	933	1.04	969	1.17	1005	1.32	1039	1.46	1073	1.61	1106	1.76
6000	842	0.69	879	0.82	915	0.95	951	1.08	985	1.22	1020	1.36	1052	1.50	1085	1.66	1117	1.82	1149	1.98
Available External Static Pressure (Inches of Water Gauge)																				
	1.10"		1.20"		1.30"		1.40"		1.50"		1.60"		1.70"		1.80"		1.90"		2.00"	
CFM	RPM	BHP	RPM	BHP	RPM	BHP	RPM	BHP	RPM	BHP	RPM	BHP	RPM	BHP	RPM	BHP	RPM	BHP	RPM	BHP
3750	1007	1.29	1042	1.42	1075	1.55	1107	1.69	1138	1.83	1168	1.97	1197	2.11	1225	2.26	1253	2.41	1280	2.56
4000	1024	1.36	1057	1.49	1090	1.63	1122	1.77	1153	1.91	1183	2.06	1212	2.21	1240	2.36	1268	2.51	1294	2.66
4500	1060	1.53	1093	1.67	1124	1.81	1155	1.95	1184	2.1	1213	2.25	1242	2.41	1270	2.56	1298	2.73	1324	2.89
5000	1098	1.71	1130	1.86	1161	2.01	1191	2.16	1220	2.32	1248	2.47	1275	2.63	1302	2.79	1328	2.96	1355	3.13
5500	1138	1.91	1169	2.07	1199	2.23	1228	2.39	1256	2.55	1284	2.72	1311	2.89	1338	3.06	1364	3.23	1389	3.4
6000	1180	2.14	1210	2.3	1239	2.47	1267	2.64	1295	2.81	1322	2.99	1348	3.16	1375	3.34	1400	3.52	1425	3.7

Notes:

1. Available External Static Pressure is the static pressure difference between the return duct and the supply duct plus the static pressure drop caused by accessories and options.
2. Data includes pressure drop due to standard filters and wet coils. No accessories or options are included in pressure drop data.
3. To determine static pressure drop due to other options/accessories, refer to the applicable table in the fan performance section.
4. Direct drive fan motor heat is negligible.
5. Factory supplied motors, in commercial equipment, are definite purpose motors, specifically designed and tested to operate reliably and continuously at all cataloged conditions. Using the full horsepower range of our fan motors as shown in our tabular data will not result in nuisance tripping or premature motor failure. Our product's warranty will not be affected.

Table 25. Evaporator fan performance — 15 ton, model WHJ, horizontal

Available External Static Pressure (Inches of Water Gauge)																				
	0.10"		0.20"		0.30"		0.40"		0.50"		0.60"		0.70"		0.80"		0.90"		1.00"	
CFM	RPM	BHP	RPM	BHP	RPM	BHP	RPM	BHP	RPM	BHP	RPM	BHP	RPM	BHP	RPM	BHP	RPM	BHP	RPM	BHP
4500	653	0.33	701	0.43	748	0.54	792	0.64	835	0.76	877	0.88	917	1.00	955	1.13	991	1.26	1027	1.39
4800	690	0.39	736	0.49	780	0.60	822	0.72	863	0.83	903	0.96	942	1.09	979	1.22	1015	1.36	1049	1.50
5400	766	0.53	807	0.64	846	0.76	885	0.88	923	1.01	959	1.14	995	1.28	1030	1.43	1065	1.57	1098	1.72
6000	842	0.69	879	0.82	915	0.95	951	1.08	985	1.22	1020	1.36	1052	1.50	1085	1.66	1117	1.82	1149	1.98
6600	919	0.90	953	1.03	986	1.17	1019	1.32	1051	1.47	1082	1.62	1114	1.77	1144	1.93	1173	2.09	1203	2.26
7200	997	1.13	1028	1.28	1058	1.43	1089	1.59	1118	1.75	1148	1.91	1177	2.08	1205	2.25	1233	2.42	1261	2.59
Available External Static Pressure (Inches of Water Gauge)																				
	1.10"		1.20"		1.30"		1.40"		1.50"		1.60"		1.70"		1.80"		1.90"		2.00"	
CFM	RPM	BHP	RPM	BHP	RPM	BHP	RPM	BHP	RPM	BHP	RPM	BHP	RPM	BHP	RPM	BHP	RPM	BHP	RPM	BHP
4500	1060	1.53	1093	1.67	1124	1.81	1155	1.95	1184	2.1	1213	2.25	1242	2.41	1270	2.56	1298	2.73	1324	2.89
4800	1083	1.64	1115	1.78	1146	1.93	1176	2.07	1205	2.23	1234	2.38	1261	2.53	1289	2.7	1316	2.86	1342	3.03
5400	1130	1.87	1161	2.03	1191	2.18	1220	2.34	1249	2.5	1277	2.67	1304	2.83	1331	3	1356	3.17	1382	3.34
6000	1180	2.14	1210	2.3	1239	2.47	1267	2.64	1295	2.81	1322	2.99	1348	3.16	1375	3.34	1400	3.52	1425	3.7
6600	1232	2.44	1261	2.61	1289	2.79	1317	2.97	1343	3.15	1370	3.34	1396	3.53	1421	3.71	1445	3.9	1469	4.1
7200	1288	2.77	1315	2.96	1342	3.15	1368	3.34	1394	3.53	1420	3.73	1445	3.92	1469	4.12	1493	4.33	1517	4.53

Notes:

1. Available External Static Pressure is the static pressure difference between the return duct and the supply duct plus the static pressure drop caused by accessories and options.
2. Data includes pressure drop due to standard filters and wet coils. No accessories or options are included in pressure drop data.
3. To determine static pressure drop due to other options/accessories, refer to the applicable table in the fan performance section.
4. Direct drive fan motor heat is negligible.
5. Factory supplied motors, in commercial equipment, are definite purpose motors, specifically designed and tested to operate reliably and continuously at all cataloged conditions. Using the full horsepower range of our fan motors as shown in our tabular data will not result in nuisance tripping or premature motor failure. Our product's warranty will not be affected.

Table 26. Evaporator fan performance — 20 ton, model WHJ, horizontal

Available External Static Pressure (Inches of Water Gauge)																				
	0.10"		0.20"		0.30"		0.40"		0.50"		0.60"		0.70"		0.80"		0.90"		1.00"	
CFM	RPM	BHP	RPM	BHP	RPM	BHP	RPM	BHP	RPM	BHP	RPM	BHP	RPM	BHP	RPM	BHP	RPM	BHP	RPM	BHP
6000	810	0.60	847	0.72	883	0.84	920	0.97	956	1.10	989	1.23	1022	1.37	1054	1.52	1085	1.66	1114	1.80
6400	860	0.71	894	0.84	928	0.96	962	1.10	997	1.23	1029	1.37	1061	1.52	1092	1.67	1122	1.82	1150	1.98
7200	958	0.98	990	1.11	1020	1.26	1050	1.40	1081	1.55	1112	1.71	1141	1.86	1169	2.02	1197	2.18	1225	2.35
8000	1058	1.30	1087	1.46	1114	1.61	1142	1.77	1168	1.93	1196	2.10	1224	2.27	1251	2.44	1277	2.62	1303	2.80
8800	1158	1.70	1185	1.87	1210	2.04	1235	2.21	1260	2.38	1284	2.56	1309	2.74	1335	2.93	1359	3.12	1384	3.32
9600	1259	2.17	1283	2.35	1307	2.54	1330	2.72	1353	2.91	1376	3.11	1398	3.30	1420	3.50	1444	3.70	1467	3.91
Available External Static Pressure (Inches of Water Gauge)																				
	1.10"		1.20"		1.30"		1.40"		1.50"		1.60"		1.70"		1.80"		1.90"		2.00"	
CFM	RPM	BHP	RPM	BHP	RPM	BHP	RPM	BHP	RPM	BHP	RPM	BHP	RPM	BHP	RPM	BHP	RPM	BHP	RPM	BHP
6000	1142	1.94	1170	2.09	1197	2.24	1223	2.39	1250	2.54	1276	2.7	1302	2.86	1327	3.02	1352	3.19	1377	3.36
6400	1178	2.13	1204	2.28	1231	2.43	1256	2.59	1282	2.75	1306	2.91	1331	3.07	1356	3.24	1381	3.41	1404	3.59
7200	1252	2.53	1278	2.7	1303	2.87	1327	3.04	1350	3.21	1374	3.39	1397	3.56	1420	3.74	1442	3.92	1464	4.09
8000	1327	2.97	1352	3.16	1377	3.35	1401	3.55	1424	3.74	1446	3.93	1468	4.12	1490	4.31	1511	4.5	1532	4.69
8800	1407	3.51	1431	3.7	1453	3.9	1476	4.1	1498	4.31	1520	4.52	1542	4.74	1563	4.95	1584	5.15	1604	5.36
9600	1490	4.12	1512	4.33	1533	4.53	1555	4.75	1575	4.96	1596	5.17	1617	5.4	1637	5.63	-	-	-	-

Notes:

1. Available External Static Pressure is the static pressure difference between the return duct and the supply duct plus the static pressure drop caused by accessories and options.
2. Data includes pressure drop due to standard filters and wet coils. No accessories or options are included in pressure drop data.
3. To determine static pressure drop due to other options/accessories, refer to the applicable table in the fan performance section.
4. Direct drive fan motor heat is negligible.
5. Factory supplied motors, in commercial equipment, are definite purpose motors, specifically designed and tested to operate reliably and continuously at all cataloged conditions. Using the full horsepower range of our fan motors as shown in our tabular data will not result in nuisance tripping or premature motor failure. Our product's warranty will not be affected.

Table 27. Evaporator fan performance — 25 ton, model WHJ, horizontal

Available External Static Pressure (Inches of Water Gauge)																				
	0.10"		0.20"		0.30"		0.40"		0.50"		0.60"		0.70"		0.80"		0.90"		1.00"	
CFM	RPM	BHP	RPM	BHP	RPM	BHP	RPM	BHP	RPM	BHP	RPM	BHP	RPM	BHP	RPM	BHP	RPM	BHP	RPM	BHP
	3-hp Standard Motor																			
7500	996	1.09	1026	1.23	1055	1.38	1084	1.53	1113	1.69	1143	1.85	1172	2.01	1200	2.17	1227	2.34	1253	2.51
8000	1058	1.30	1087	1.46	1114	1.61	1142	1.77	1168	1.93	1196	2.10	1224	2.27	1251	2.44	1277	2.62	1303	2.80
9000	1183	1.81	1209	1.98	1234	2.15	1259	2.33	1283	2.51	1307	2.69	1330	2.87	1356	3.07	1380	3.26	1404	3.46
10000	1309	2.44	1333	2.63	1356	2.82	1378	3.01	1400	3.21	1422	3.41	1443	3.61	1464	3.81	1486	4.02	1509	4.23
11000	1436	3.21	1457	3.41	1478	3.62	1499	3.83	1519	4.05	1539	4.26	1559	4.48	1579	4.70	1598	4.92	1617	5.14
12000	1562	4.12	1582	4.34	1602	4.57	1621	4.80	1640	5.03	1658	5.26	1676	5.5	1695	5.74	-	-	-	-
Available External Static Pressure (Inches of Water Gauge)																				
	1.10"		1.20"		1.30"		1.40"		1.50"		1.60"		1.70"		1.80"		1.90"		2.00"	
CFM	RPM	BHP	RPM	BHP	RPM	BHP	RPM	BHP	RPM	BHP	RPM	BHP	RPM	BHP	RPM	BHP	RPM	BHP	RPM	BHP
	3-hp Standard Motor																			
7500	1280	2.69	1305	2.87	1330	3.05	1354	3.23	1378	3.4	1401	3.58	1423	3.76	1445	3.94	1467	4.13	1489	4.31
8000	1327	2.97	1352	3.16	1377	3.35	1401	3.55	1424	3.74	1446	3.93	1468	4.12	1490	4.31	1511	4.5	1532	4.69
9000	1428	3.65	1451	3.85	1473	4.05	1495	4.25	1517	4.46	1539	4.68	1561	4.9	1582	5.11	1602	5.33	1622	5.54
10000	1531	4.45	1553	4.67	1574	4.88	1595	5.1	1616	5.32	1636	5.54	1655	5.77	-	-	-	-	-	-
11000	1637	5.38	1658	5.61	-	-	-	-	-	-	-	-	-	-	-	-	-	-	-	-
12000	-	-	-	-	-	-	-	-	-	-	-	-	-	-	-	-	-	-	-	-

Notes:

1. Available External Static Pressure is the static pressure difference between the return duct and the supply duct plus the static pressure drop caused by accessories and options.
2. Data includes pressure drop due to standard filters and wet coils. No accessories or options are included in pressure drop data.
3. To determine static pressure drop due to other options/accessories, refer to the applicable table in the fan performance section.
4. Direct drive fan motor heat is negligible.
5. Factory supplied motors, in commercial equipment, are definite purpose motors, specifically designed and tested to operate reliably and continuously at all cataloged conditions. Using the full horsepower range of our fan motors as shown in our tabular data will not result in nuisance tripping or premature motor failure. Our product's warranty will not be affected.

Table 28. Evaporator fan performance — 25 ton, model WHJ, horizontal, high static drive

Available External Static Pressure (Inches of Water Gauge)																				
	0.10"		0.20"		0.30"		0.40"		0.50"		0.60"		0.70"		0.80"		0.90"		1.00"	
CFM	RPM	BHP	RPM	BHP	RPM	BHP	RPM	BHP	RPM	BHP	RPM	BHP	RPM	BHP	RPM	BHP	RPM	BHP	RPM	BHP
	5-hp Oversized Motor																			
7500	1023	1.11	1054	1.27	1086	1.42	1119	1.59	1149	1.76	1177	1.92	1205	2.09	1233	2.25	1259	2.42	1286	2.59
8000	1087	1.33	1117	1.49	1145	1.65	1177	1.83	1207	2.02	1234	2.19	1260	2.36	1286	2.54	1312	2.71	1337	2.89
9000	1216	1.85	1242	2.03	1268	2.21	1294	2.40	1323	2.60	1350	2.80	1374	3.00	1398	3.20	1421	3.39	1444	3.59
10000	1346	2.50	1369	2.69	1393	2.89	1416	3.09	1440	3.30	1465	3.53	1490	3.75	1513	3.98	1535	4.19	1556	4.41
11000	1476	3.28	1497	3.48	1519	3.70	1540	3.92	1561	4.15	1583	4.38	1606	4.63	1628	4.88	1650	5.13	1671	5.37
12000	1606	4.22	1626	4.44	1645	4.67	1665	4.91	1685	5.15	1704	5.4	1723	5.65	1745	5.92	1766	6.19	1786	6.47
Available External Static Pressure (Inches of Water Gauge)																				
	1.10"		1.20"		1.30"		1.40"		1.50"		1.60"		1.70"		1.80"		1.90"		2.00"	
CFM	RPM	BHP	RPM	BHP	RPM	BHP	RPM	BHP	RPM	BHP	RPM	BHP	RPM	BHP	RPM	BHP	RPM	BHP	RPM	BHP
	5-hp Oversized Motor																			
7500	1311	2.76	1336	2.93	1360	3.11	1384	3.3	1408	3.48	1432	3.67	1454	3.86	1477	4.04	1500	4.23	1522	4.42
8000	1362	3.07	1386	3.25	1410	3.44	1432	3.63	1455	3.82	1478	4.01	1501	4.21	1523	4.41	1544	4.61	1565	4.81
9000	1467	3.79	1490	3.99	1512	4.19	1534	4.39	1555	4.59	1576	4.8	1597	5.01	1617	5.22	1637	5.44	1658	5.66
10000	1576	4.63	1597	4.85	1618	5.07	1639	5.29	1659	5.51	1679	5.73	1699	5.95	1718	6.18	1737	6.41	1756	6.65
11000	1690	5.61	1710	5.85	1728	6.09	1747	6.33	1766	6.57	1785	6.81	1804	7.05	1822	7.29	1841	7.54	1859	7.78
12000	1806	6.74	1825	7	1843	7.26	1860	7.52	1877	7.78	1894	8.04	1911	8.31	-	-	-	-	-	-

Notes:

1. Available External Static Pressure is the static pressure difference between the return duct and the supply duct plus the static pressure drop caused by accessories and options.
2. Data includes pressure drop due to standard filters and wet coils. No accessories or options are included in pressure drop data.
3. To determine static pressure drop due to other options/accessories, refer to the applicable table in the fan performance section.
4. Direct drive fan motor heat is negligible.
5. Factory supplied motors, in commercial equipment, are definite purpose motors, specifically designed and tested to operate reliably and continuously at all cataloged conditions. Using the full horsepower range of our fan motors as shown in our tabular data will not result in nuisance tripping or premature motor failure. Our product's warranty will not be affected.

Evaporator Fan Performance - Dual Fuel

12.5 to 25 Ton Units — Downflow

Table 29. Evaporator fan performance — 12.5 ton, model DHJ, downflow, high gas heat

Available External Static Pressure (Inches of Water Gauge)																				
	0.10"		0.20"		0.30"		0.40"		0.50"		0.60"		0.70"		0.80"		0.90"		1.00"	
CFM	RPM	BHP	RPM	BHP	RPM	BHP	RPM	BHP	RPM	BHP	RPM	BHP	RPM	BHP	RPM	BHP	RPM	BHP	RPM	BHP
3750	558	0.21	619	0.30	674	0.39	724	0.49	771	0.60	815	0.71	859	0.82	901	0.94	940	1.06	977	1.18
4000	586	0.24	645	0.33	698	0.44	747	0.54	793	0.65	835	0.76	876	0.88	918	1.00	957	1.13	994	1.25
4500	645	0.31	699	0.42	749	0.53	795	0.64	838	0.76	879	0.88	918	1.01	955	1.13	991	1.27	1028	1.41
5000	704	0.40	755	0.52	801	0.64	845	0.76	885	0.89	924	1.02	962	1.16	997	1.29	1032	1.43	1065	1.57
5500	765	0.51	811	0.63	855	0.77	896	0.90	935	1.04	972	1.18	1008	1.32	1042	1.47	1075	1.62	1107	1.77
6000	827	0.63	869	0.77	910	0.91	950	1.06	986	1.20	1022	1.36	1056	1.51	1089	1.67	1121	1.82	1152	1.99
Available External Static Pressure (Inches of Water Gauge)																				
	1.10"		1.20"		1.30"		1.40"		1.50"		1.60"		1.70"		1.80"		1.90"		2.00"	
CFM	RPM	BHP	RPM	BHP	RPM	BHP	RPM	BHP	RPM	BHP	RPM	BHP	RPM	BHP	RPM	BHP	RPM	BHP	RPM	BHP
3750	1013	1.32	1048	1.45	1081	1.59	1113	1.73	1144	1.87	1174	2.02	1203	2.17	1233	2.32	1261	2.47	1289	2.63
4000	1029	1.39	1063	1.52	1097	1.67	1129	1.81	1159	1.96	1189	2.11	1218	2.26	1247	2.42	1274	2.57	1302	2.73
4500	1063	1.55	1097	1.69	1129	1.84	1160	1.99	1191	2.14	1220	2.3	1249	2.46	1277	2.62	1305	2.79	1331	2.96
5000	1098	1.72	1131	1.87	1163	2.03	1194	2.19	1224	2.35	1253	2.51	1281	2.68	1309	2.85	1336	3.02	1363	3.2
5500	1138	1.92	1168	2.08	1198	2.24	1228	2.41	1258	2.58	1287	2.75	1315	2.92	1342	3.1	1369	3.28	1395	3.46
6000	1182	2.15	1211	2.31	1239	2.48	1267	2.65	1294	2.82	1322	3	1349	3.19	1377	3.37	1403	3.56	1429	3.75

Notes:

1. Available External Static Pressure is the static pressure difference between the return duct and the supply duct plus the static pressure drop caused by accessories and options.
2. Data includes pressure drop due to standard filters, wet coils, and high gas heat. No accessories or options are included in pressure drop data.
3. To determine static pressure drop due to other options/accessories, refer to the applicable table in the fan performance section.
4. Direct drive fan motor heat is negligible.
5. Factory supplied motors, in commercial equipment, are definite purpose motors, specifically designed and tested to operate reliably and continuously at all cataloged conditions. Using the full horsepower range of our fan motors as shown in our tabular data will not result in nuisance tripping or premature motor failure. Our product's warranty will not be affected.

Table 30. Evaporator fan performance — 15 ton, model DHJ, downflow, high gas heat

Available External Static Pressure (Inches of Water Gauge)																				
	0.10"		0.20"		0.30"		0.40"		0.50"		0.60"		0.70"		0.80"		0.90"		1.00"	
CFM	RPM	BHP	RPM	BHP	RPM	BHP	RPM	BHP	RPM	BHP	RPM	BHP	RPM	BHP	RPM	BHP	RPM	BHP	RPM	BHP
4500	645	0.31	699	0.42	749	0.53	795	0.64	838	0.76	879	0.88	918	1.01	955	1.13	991	1.27	1028	1.41
4800	680	0.36	732	0.48	780	0.59	824	0.71	866	0.84	906	0.96	944	1.09	980	1.23	1015	1.36	1049	1.50
5400	753	0.48	800	0.61	844	0.74	886	0.87	925	1.01	962	1.15	998	1.29	1033	1.43	1066	1.58	1099	1.73
6000	827	0.63	869	0.77	910	0.91	950	1.06	986	1.20	1022	1.36	1056	1.51	1089	1.67	1121	1.82	1152	1.99
6600	901	0.81	940	0.96	978	1.11	1015	1.27	1050	1.43	1083	1.59	1116	1.76	1147	1.93	1177	2.10	1207	2.27
7200	977	1.02	1011	1.18	1047	1.35	1082	1.52	1115	1.69	1147	1.87	1178	2.04	1208	2.22	1236	2.41	1265	2.59
Available External Static Pressure (Inches of Water Gauge)																				
	1.10"		1.20"		1.30"		1.40"		1.50"		1.60"		1.70"		1.80"		1.90"		2.00"	
CFM	RPM	BHP	RPM	BHP	RPM	BHP	RPM	BHP	RPM	BHP	RPM	BHP	RPM	BHP	RPM	BHP	RPM	BHP	RPM	BHP
4500	1063	1.55	1097	1.69	1129	1.84	1160	1.99	1191	2.14	1220	2.3	1249	2.46	1277	2.62	1305	2.79	1331	2.96
4800	1084	1.65	1117	1.8	1149	1.95	1180	2.1	1210	2.26	1240	2.42	1268	2.59	1296	2.75	1323	2.93	1350	3.1
5400	1130	1.88	1160	2.04	1191	2.2	1222	2.36	1251	2.53	1280	2.7	1308	2.87	1336	3.05	1362	3.22	1388	3.4
6000	1182	2.15	1211	2.31	1239	2.48	1267	2.65	1294	2.82	1322	3.00	1349	3.19	1377	3.37	1403	3.56	1429	3.75
6600	1236	2.45	1264	2.62	1292	2.8	1318	2.99	1344	3.17	1370	3.35	1395	3.54	1419	3.73	1445	3.93	1470	4.13
7200	1292	2.78	1319	2.97	1346	3.16	1372	3.35	1397	3.55	1422	3.74	1446	3.94	1470	4.14	1494	4.35	1517	4.55

Notes:

1. Available External Static Pressure is the static pressure difference between the return duct and the supply duct plus the static pressure drop caused by accessories and options.
2. Data includes pressure drop due to standard filters, wet coils, and high gas heat. No accessories or options are included in pressure drop data.
3. To determine static pressure drop due to other options/accessories, refer to the applicable table in the fan performance section.
4. Direct drive fan motor heat is negligible.
5. Factory supplied motors, in commercial equipment, are definite purpose motors, specifically designed and tested to operate reliably and continuously at all cataloged conditions. Using the full horsepower range of our fan motors as shown in our tabular data will not result in nuisance tripping or premature motor failure. Our product's warranty will not be affected.

Evaporator Fan Performance - Dual Fuel

Table 31. Evaporator fan performance — 20 ton, model DHJ, downflow, high gas heat

Available External Static Pressure (Inches of Water Gauge)																				
	0.10"		0.20"		0.30"		0.40"		0.50"		0.60"		0.70"		0.80"		0.90"		1.00"	
CFM	RPM	BHP	RPM	BHP	RPM	BHP	RPM	BHP	RPM	BHP	RPM	BHP	RPM	BHP	RPM	BHP	RPM	BHP	RPM	BHP
6000	808	0.58	848	0.71	888	0.85	927	0.98	964	1.12	999	1.27	1033	1.42	1066	1.57	1098	1.71	1128	1.87
6400	856	0.68	894	0.82	932	0.97	969	1.11	1004	1.26	1038	1.41	1071	1.57	1103	1.73	1134	1.88	1164	2.04
7200	954	0.94	989	1.09	1022	1.25	1056	1.41	1088	1.57	1119	1.74	1150	1.91	1180	2.08	1209	2.26	1238	2.43
8000	1052	1.25	1084	1.41	1114	1.58	1145	1.76	1175	1.94	1204	2.12	1232	2.31	1260	2.49	1288	2.69	1315	2.88
8800	1151	1.62	1180	1.8	1209	1.99	1236	2.18	1263	2.38	1291	2.58	1318	2.78	1344	2.98	1369	3.18	1394	3.39
9600	1251	2.07	1278	2.26	1304	2.46	1329	2.67	1354	2.88	1380	3.1	1405	3.31	1429	3.53	1453	3.75	1477	3.97
Available External Static Pressure (Inches of Water Gauge)																				
	1.10"		1.20"		1.30"		1.40"		1.50"		1.60"		1.70"		1.80"		1.90"		2.00"	
CFM	RPM	BHP	RPM	BHP	RPM	BHP	RPM	BHP	RPM	BHP	RPM	BHP	RPM	BHP	RPM	BHP	RPM	BHP	RPM	BHP
6000	1157	2.02	1185	2.17	1213	2.32	1240	2.48	1267	2.64	1294	2.8	1321	2.96	1346	3.13	1371	3.3	1395	3.47
6400	1192	2.2	1220	2.36	1247	2.53	1274	2.69	1299	2.85	1324	3.02	1350	3.19	1376	3.36	1400	3.54	1424	3.71
7200	1265	2.61	1292	2.79	1318	2.97	1343	3.15	1368	3.33	1392	3.51	1416	3.69	1439	3.88	1462	4.06	1484	4.25
8000	1341	3.07	1367	3.27	1392	3.47	1416	3.67	1440	3.87	1464	4.06	1486	4.26	1509	4.47	1531	4.67	1552	4.87
8800	1419	3.6	1444	3.81	1468	4.03	1491	4.24	1514	4.46	1537	4.68	1559	4.9	1581	5.11	1602	5.33	1623	5.55
9600	1500	4.19	1523	4.42	1546	4.65	1569	4.88	1591	5.12	1613	5.35	1634	5.59	-	-	-	-	-	-

Notes:

1. Available External Static Pressure is the static pressure difference between the return duct and the supply duct plus the static pressure drop caused by accessories and options.
2. Data includes pressure drop due to standard filters, wet coils, and high gas heat. No accessories or options are included in pressure drop data.
3. To determine static pressure drop due to other options/accessories, refer to the applicable table in the fan performance section.
4. Direct drive fan motor heat is negligible.
5. Factory supplied motors, in commercial equipment, are definite purpose motors, specifically designed and tested to operate reliably and continuously at all cataloged conditions. Using the full horsepower range of our fan motors as shown in our tabular data will not result in nuisance tripping or premature motor failure. Our product's warranty will not be affected.

Table 32. Evaporator fan performance — 25 ton, model DHJ, downflow, high gas heat

Available External Static Pressure (Inches of Water Gauge)																				
	0.10"		0.20"		0.30"		0.40"		0.50"		0.60"		0.70"		0.80"		0.90"		1.00"	
CFM	RPM	BHP	RPM	BHP	RPM	BHP	RPM	BHP	RPM	BHP	RPM	BHP	RPM	BHP	RPM	BHP	RPM	BHP	RPM	BHP
	3-hp Standard Motor																			
7500	991	1.05	1024	1.2	1056	1.37	1089	1.53	1120	1.7	1151	1.87	1180	2.05	1210	2.23	1238	2.41	1266	2.59
8000	1052	1.25	1084	1.41	1114	1.58	1145	1.76	1175	1.94	1204	2.12	1232	2.31	1260	2.49	1288	2.69	1315	2.88
9000	1176	1.73	1205	1.91	1232	2.1	1259	2.3	1286	2.5	1313	2.7	1339	2.9	1365	3.11	1390	3.31	1414	3.52
10000	1301	2.32	1327	2.52	1352	2.73	1376	2.94	1400	3.16	1425	3.39	1449	3.61	1473	3.84	1496	4.07	1519	4.29
11000	1426	3.04	1450	3.26	1473	3.49	1495	3.72	1518	3.96	1539	4.2	1561	4.44	1584	4.69	1605	4.94	1627	5.19
12000	1551	3.9	1573	4.15	1595	4.39	1615	4.63	1636	4.89	1657	5.15	1676	5.41	1696	5.68	-	-	-	-
Available External Static Pressure (Inches of Water Gauge)																				
	1.10"		1.20"		1.30"		1.40"		1.50"		1.60"		1.70"		1.80"		1.90"		2.00"	
CFM	RPM	BHP	RPM	BHP	RPM	BHP	RPM	BHP	RPM	BHP	RPM	BHP	RPM	BHP	RPM	BHP	RPM	BHP	RPM	BHP
	3-hp Standard Motor																			
7500	1293	2.78	1320	2.97	1345	3.15	1371	3.34	1395	3.52	1419	3.71	1442	3.9	1465	4.09	1487	4.28	1509	4.47
8000	1341	3.07	1367	3.27	1392	3.47	1416	3.67	1440	3.87	1464	4.06	1486	4.26	1509	4.47	1531	4.67	1552	4.87
9000	1439	3.74	1463	3.96	1487	4.18	1510	4.4	1533	4.62	1556	4.84	1578	5.06	1599	5.29	1620	5.51	1641	5.73
10000	1542	4.52	1564	4.75	1586	4.99	1608	5.23	1630	5.47	1651	5.72	-	-	-	-	-	-	-	-
11000	1648	5.44	1669	5.69	-	-	-	-	-	-	-	-	-	-	-	-	-	-	-	-
12000	-	-	-	-	-	-	-	-	-	-	-	-	-	-	-	-	-	-	-	-

Notes:

1. Available External Static Pressure is the static pressure difference between the return duct and the supply duct plus the static pressure drop caused by accessories and options.
2. Data includes pressure drop due to standard filters, wet coils, and high gas heat. No accessories or options are included in pressure drop data.
3. To determine static pressure drop due to other options/accessories, refer to the applicable table in the fan performance section.
4. Direct drive fan motor heat is negligible.
5. Factory supplied motors, in commercial equipment, are definite purpose motors, specifically designed and tested to operate reliably and continuously at all cataloged conditions. Using the full horsepower range of our fan motors as shown in our tabular data will not result in nuisance tripping or premature motor failure. Our product's warranty will not be affected.

Table 33. Evaporator fan performance — 25 ton, model DHJ, downflow, high static drive

Available External Static Pressure (Inches of Water Gauge)																				
	0.10"		0.20"		0.30"		0.40"		0.50"		0.60"		0.70"		0.80"		0.90"		1.00"	
CFM	RPM	BHP	RPM	BHP	RPM	BHP	RPM	BHP	RPM	BHP	RPM	BHP	RPM	BHP	RPM	BHP	RPM	BHP	RPM	BHP
	5-hp Oversized Motor																			
7500	1005	1.05	1040	1.20	1074	1.37	1106	1.53	1138	1.70	1169	1.88	1199	2.05	1229	2.23	1257	2.41	1284	2.58
8000	1067	1.25	1101	1.41	1132	1.59	1163	1.76	1193	1.94	1223	2.12	1252	2.31	1280	2.50	1308	2.69	1334	2.87
9000	1193	1.72	1223	1.91	1252	2.11	1280	2.30	1307	2.50	1334	2.70	1360	2.90	1386	3.11	1412	3.32	1437	3.53
10000	1319	2.31	1346	2.52	1373	2.74	1398	2.95	1423	3.17	1448	3.39	1472	3.61	1496	3.84	1520	4.06	1543	4.29
11000	1445	3.03	1470	3.26	1495	3.49	1518	3.73	1542	3.97	1565	4.21	1587	4.45	1609	4.69	1631	4.94	1653	5.18
12000	1572	3.89	1595	4.14	1618	4.39	1640	4.65	1662	4.9	1683	5.16	1704	5.42	1725	5.69	1745	5.95	1765	6.22
Available External Static Pressure (Inches of Water Gauge)																				
	1.10"		1.20"		1.30"		1.40"		1.50"		1.60"		1.70"		1.80"		1.90"		2.00"	
CFM	RPM	BHP	RPM	BHP	RPM	BHP	RPM	BHP	RPM	BHP	RPM	BHP	RPM	BHP	RPM	BHP	RPM	BHP	RPM	BHP
	5-hp Oversized Motor																			
7500	1311	2.77	1336	2.95	1361	3.14	1386	3.33	1410	3.52	1435	3.71	1459	3.9	1483	4.10	1506	4.30	1529	4.50
8000	1360	3.06	1385	3.26	1410	3.45	1434	3.65	1457	3.85	1480	4.05	1503	4.25	1526	4.46	1549	4.66	1571	4.87
9000	1462	3.74	1486	3.95	1509	4.17	1532	4.38	1554	4.60	1576	4.82	1598	5.04	1619	5.26	1639	5.48	1660	5.71
10000	1566	4.52	1589	4.76	1611	4.99	1633	5.23	1655	5.47	1676	5.70	1696	5.94	1717	6.18	1736	6.42	1756	6.67
11000	1674	5.43	1695	5.69	1716	5.94	1737	6.20	1758	6.46	1778	6.72	1798	6.98	1817	7.24	1837	7.50	1855	7.76
12000	1785	6.49	1805	6.76	1824	7.03	1843	7.30	1863	7.58	1882	7.86	1902	8.14	1920	8.42	-	-	-	-

Notes:

1. Available External Static Pressure is the static pressure difference between the return duct and the supply duct plus the static pressure drop caused by accessories and options.
2. Data includes pressure drop due to standard filters, wet coils, and high gas heat. No accessories or options are included in pressure drop data.
3. To determine static pressure drop due to other options/accessories, refer to the applicable table in the fan performance section.
4. Direct drive fan motor heat is negligible.
5. Factory supplied motors, in commercial equipment, are definite purpose motors, specifically designed and tested to operate reliably and continuously at all cataloged conditions. Using the full horsepower range of our fan motors as shown in our tabular data will not result in nuisance tripping or premature motor failure. Our product's warranty will not be affected.

12.5 to 25 Ton Units — Horizontal

Table 34. Evaporator fan performance — 12.5 ton, model DHJ, horizontal, high gas heat

Available External Static Pressure (Inches of Water Gauge)																				
	0.10"		0.20"		0.30"		0.40"		0.50"		0.60"		0.70"		0.80"		0.90"		1.00"	
CFM	RPM	BHP	RPM	BHP	RPM	BHP	RPM	BHP	RPM	BHP	RPM	BHP	RPM	BHP	RPM	BHP	RPM	BHP	RPM	BHP
3750	572	0.23	629	0.32	683	0.41	734	0.51	779	0.61	822	0.71	864	0.82	903	0.94	941	1.05	977	1.17
4000	603	0.27	656	0.36	708	0.46	757	0.56	802	0.67	844	0.77	884	0.89	922	1.00	960	1.13	995	1.25
4500	666	0.36	713	0.45	760	0.56	805	0.67	849	0.79	890	0.91	928	1.03	964	1.15	999	1.28	1034	1.41
5000	730	0.47	772	0.57	815	0.68	857	0.80	897	0.93	937	1.06	974	1.20	1009	1.33	1042	1.46	1075	1.60
5500	795	0.60	833	0.71	872	0.83	911	0.96	949	1.09	985	1.23	1021	1.38	1056	1.52	1089	1.67	1120	1.81
6000	861	0.75	896	0.88	931	1.00	966	1.14	1002	1.28	1037	1.43	1070	1.58	1103	1.73	1136	1.89	1167	2.05
Available External Static Pressure (Inches of Water Gauge)																				
	1.10"		1.20"		1.30"		1.40"		1.50"		1.60"		1.70"		1.80"		1.90"		2.00"	
CFM	RPM	BHP	RPM	BHP	RPM	BHP	RPM	BHP	RPM	BHP	RPM	BHP	RPM	BHP	RPM	BHP	RPM	BHP	RPM	BHP
3750	1011	1.3	1043	1.42	1074	1.54	1104	1.67	1133	1.8	1161	1.93	1188	2.06	1214	2.19	1240	2.33	1265	2.47
4000	1029	1.38	1062	1.5	1093	1.64	1123	1.77	1152	1.9	1179	2.03	1206	2.17	1233	2.31	1258	2.45	1283	2.59
4500	1067	1.55	1099	1.69	1130	1.83	1160	1.97	1189	2.12	1217	2.26	1244	2.41	1270	2.56	1296	2.71	1321	2.86
5000	1107	1.74	1138	1.89	1168	2.04	1198	2.19	1227	2.34	1254	2.5	1282	2.66	1308	2.82	1334	2.98	1359	3.14
5500	1150	1.96	1180	2.11	1209	2.27	1237	2.43	1265	2.59	1293	2.76	1319	2.92	1345	3.09	1371	3.26	1396	3.44
6000	1196	2.21	1225	2.37	1252	2.53	1280	2.7	1306	2.87	1333	3.04	1358	3.21	1384	3.39	1409	3.57	1434	3.75

Notes:

1. Available External Static Pressure is the static pressure difference between the return duct and the supply duct plus the static pressure drop caused by accessories and options.
2. Data includes pressure drop due to standard filters, wet coils, and high gas heat. No accessories or options are included in pressure drop data.
3. To determine static pressure drop due to other options/accessories, refer to the applicable table in the fan performance section.
4. Direct drive fan motor heat is negligible.
5. Factory supplied motors, in commercial equipment, are definite purpose motors, specifically designed and tested to operate reliably and continuously at all cataloged conditions. Using the full horsepower range of our fan motors as shown in our tabular data will not result in nuisance tripping or premature motor failure. Our product's warranty will not be affected.

Evaporator Fan Performance - Dual Fuel

Table 35. Evaporator fan performance — 15 ton, model DHJ, horizontal, high gas heat

Available External Static Pressure (Inches of Water Gauge)																				
	0.10"		0.20"		0.30"		0.40"		0.50"		0.60"		0.70"		0.80"		0.90"		1.00"	
CFM	RPM	BHP	RPM	BHP	RPM	BHP	RPM	BHP	RPM	BHP	RPM	BHP	RPM	BHP	RPM	BHP	RPM	BHP	RPM	BHP
4500	666	0.36	713	0.45	760	0.56	805	0.67	849	0.79	890	0.91	928	1.03	964	1.15	999	1.28	1034	1.41
4800	705	0.42	749	0.52	793	0.63	836	0.75	878	0.87	918	1.00	955	1.13	991	1.25	1025	1.39	1058	1.52
5400	782	0.57	821	0.68	860	0.80	900	0.93	938	1.06	975	1.20	1012	1.34	1047	1.48	1079	1.62	1111	1.77
6000	861	0.75	896	0.88	931	1.00	966	1.14	1002	1.28	1037	1.43	1070	1.58	1103	1.73	1136	1.89	1167	2.05
6600	940	0.98	972	1.11	1003	1.24	1036	1.39	1068	1.54	1101	1.70	1132	1.86	1163	2.02	1193	2.19	1223	2.36
7200	1020	1.24	1050	1.38	1078	1.53	1108	1.68	1138	1.84	1167	2.01	1197	2.18	1226	2.35	1254	2.53	1282	2.71
Available External Static Pressure (Inches of Water Gauge)																				
	1.10"		1.20"		1.30"		1.40"		1.50"		1.60"		1.70"		1.80"		1.90"		2.00"	
CFM	RPM	BHP	RPM	BHP	RPM	BHP	RPM	BHP	RPM	BHP	RPM	BHP	RPM	BHP	RPM	BHP	RPM	BHP	RPM	BHP
4500	1067	1.55	1099	1.69	1130	1.83	1160	1.97	1189	2.12	1217	2.26	1244	2.41	1270	2.56	1296	2.71	1321	2.86
4800	1090	1.66	1122	1.81	1153	1.95	1183	2.1	1212	2.25	1240	2.4	1267	2.56	1293	2.71	1319	2.87	1343	3.03
5400	1141	1.91	1171	2.07	1200	2.22	1229	2.38	1257	2.54	1285	2.7	1312	2.87	1338	3.04	1363	3.21	1388	3.38
6000	1196	2.21	1225	2.37	1252	2.53	1280	2.7	1306	2.87	1333	3.04	1358	3.21	1384	3.39	1409	3.57	1434	3.75
6600	1252	2.54	1281	2.72	1308	2.89	1334	3.06	1359	3.24	1384	3.41	1409	3.6	1433	3.79	1457	3.98	1481	4.17
7200	1309	2.9	1337	3.09	1364	3.28	1390	3.47	1415	3.66	1439	3.85	1463	4.04	1486	4.23	1509	4.42	1532	4.63

Notes:

1. Available External Static Pressure is the static pressure difference between the return duct and the supply duct plus the static pressure drop caused by accessories and options.
2. Data includes pressure drop due to standard filters, wet coils, and high gas heat. No accessories or options are included in pressure drop data.
3. To determine static pressure drop due to other options/accessories, refer to the applicable table in the fan performance section.
4. Direct drive fan motor heat is negligible.
5. Factory supplied motors, in commercial equipment, are definite purpose motors, specifically designed and tested to operate reliably and continuously at all cataloged conditions. Using the full horsepower range of our fan motors as shown in our tabular data will not result in nuisance tripping or premature motor failure. Our product's warranty will not be affected.

Table 36. Evaporator fan performance — 20 ton, model DHJ, horizontal, high gas heat

Available External Static Pressure (Inches of Water Gauge)																				
	0.10"		0.20"		0.30"		0.40"		0.50"		0.60"		0.70"		0.80"		0.90"		1.00"	
CFM	RPM	BHP	RPM	BHP	RPM	BHP	RPM	BHP	RPM	BHP	RPM	BHP	RPM	BHP	RPM	BHP	RPM	BHP	RPM	BHP
6000	842	0.70	879	0.82	916	0.94	952	1.08	986	1.21	1019	1.35	1052	1.49	1082	1.64	1112	1.78	1140	1.92
6400	894	0.83	928	0.96	963	1.09	997	1.23	1030	1.37	1061	1.51	1093	1.66	1123	1.82	1152	1.97	1179	2.12
7200	997	1.14	1028	1.28	1058	1.43	1089	1.58	1120	1.74	1149	1.90	1178	2.06	1205	2.22	1233	2.39	1260	2.57
8000	1102	1.53	1129	1.69	1157	1.85	1183	2.01	1212	2.18	1240	2.35	1266	2.53	1292	2.71	1318	2.88	1343	3.07
8800	1207	2.00	1232	2.17	1257	2.35	1281	2.52	1306	2.71	1332	2.89	1357	3.08	1382	3.28	1406	3.47	1429	3.66
9600	1312	2.56	1335	2.75	1358	2.94	1381	3.13	1403	3.32	1426	3.52	1450	3.73	1473	3.94	1496	4.14	1518	4.35
Available External Static Pressure (Inches of Water Gauge)																				
	1.10"		1.20"		1.30"		1.40"		1.50"		1.60"		1.70"		1.80"		1.90"		2.00"	
CFM	RPM	BHP	RPM	BHP	RPM	BHP	RPM	BHP	RPM	BHP	RPM	BHP	RPM	BHP	RPM	BHP	RPM	BHP	RPM	BHP
6000	1168	2.07	1195	2.21	1222	2.36	1249	2.52	1275	2.68	1301	2.84	1326	3.00	1352	3.17	1376	3.33	1401	3.50
6400	1206	2.27	1232	2.43	1258	2.58	1284	2.74	1308	2.90	1334	3.07	1359	3.24	1383	3.41	1407	3.58	1430	3.76
7200	1286	2.74	1311	2.91	1335	3.08	1359	3.25	1382	3.42	1405	3.60	1428	3.78	1450	3.95	1472	4.13	1495	4.32
8000	1368	3.26	1392	3.45	1415	3.65	1438	3.83	1460	4.02	1482	4.21	1503	4.40	1525	4.60	1546	4.79	1567	4.99
8800	1452	3.86	1474	4.06	1497	4.27	1520	4.48	1541	4.7	1563	4.91	1583	5.12	1604	5.32	1623	5.53	1643	5.74
9600	1540	4.57	1561	4.78	1582	4.99	1603	5.21	1624	5.44	1644	5.67	-	-	-	-	-	-	-	-

Notes:

1. Available External Static Pressure is the static pressure difference between the return duct and the supply duct plus the static pressure drop caused by accessories and options.
2. Data includes pressure drop due to standard filters, wet coils, and high gas heat. No accessories or options are included in pressure drop data.
3. To determine static pressure drop due to other options/accessories, refer to the applicable table in the fan performance section.
4. Direct drive fan motor heat is negligible.
5. Factory supplied motors, in commercial equipment, are definite purpose motors, specifically designed and tested to operate reliably and continuously at all cataloged conditions. Using the full horsepower range of our fan motors as shown in our tabular data will not result in nuisance tripping or premature motor failure. Our product's warranty will not be affected.

Table 37. Evaporator fan performance — 25 ton, model DHJ, horizontal, high gas heat

Available External Static Pressure (Inches of Water Gauge)																				
	0.10"		0.20"		0.30"		0.40"		0.50"		0.60"		0.70"		0.80"		0.90"		1.00"	
CFM	RPM	BHP	RPM	BHP	RPM	BHP	RPM	BHP	RPM	BHP	RPM	BHP	RPM	BHP	RPM	BHP	RPM	BHP	RPM	BHP
	3-hp Standard Motor																			
7500	1036	1.28	1066	1.43	1095	1.58	1124	1.73	1154	1.90	1183	2.06	1211	2.22	1238	2.39	1264	2.57	1291	2.75
8000	1102	1.53	1129	1.69	1157	1.85	1183	2.01	1212	2.18	1240	2.35	1266	2.53	1292	2.71	1318	2.88	1343	3.07
9000	1233	2.13	1257	2.30	1282	2.48	1306	2.67	1330	2.85	1355	3.04	1380	3.24	1404	3.43	1428	3.63	1451	3.83
10000	1365	2.88	1387	3.07	1409	3.27	1431	3.47	1453	3.67	1473	3.87	1497	4.09	1519	4.30	1541	4.52	1563	4.74
11000	1497	3.78	1517	4.00	1537	4.21	1557	4.43	1577	4.65	1597	4.87	1616	5.10	1636	5.33	1657	5.56	-	-
12000	1629	4.87	1648	5.10	1666	5.33	1685	5.57	-	-	-	-	-	-	-	-	-	-	-	-
Available External Static Pressure (Inches of Water Gauge)																				
	1.10"		1.20"		1.30"		1.40"		1.50"		1.60"		1.70"		1.80"		1.90"		2.00"	
CFM	RPM	BHP	RPM	BHP	RPM	BHP	RPM	BHP	RPM	BHP	RPM	BHP	RPM	BHP	RPM	BHP	RPM	BHP	RPM	BHP
	3-hp Standard Motor																			
7500	1316	2.93	1341	3.11	1365	3.28	1388	3.46	1411	3.64	1433	3.82	1456	4	1478	4.19	1499	4.37	1520	4.56
8000	1368	3.26	1392	3.45	1415	3.65	1438	3.83	1460	4.02	1482	4.21	1503	4.4	1525	4.6	1546	4.79	1567	4.99
9000	1474	4.03	1496	4.23	1518	4.44	1540	4.66	1562	4.87	1583	5.09	1604	5.31	1624	5.52	1643	5.73	-	-
10000	1584	4.95	1605	5.17	1626	5.40	1646	5.62	-	-	-	-	-	-	-	-	-	-	-	-
11000	-	-	-	-	-	-	-	-	-	-	-	-	-	-	-	-	-	-	-	-
12000	-	-	-	-	-	-	-	-	-	-	-	-	-	-	-	-	-	-	-	-

Notes:

1. Available External Static Pressure is the static pressure difference between the return duct and the supply duct plus the static pressure drop caused by accessories and options.
2. Data includes pressure drop due to standard filters, wet coils, and high gas heat. No accessories or options are included in pressure drop data.
3. To determine static pressure drop due to other options/accessories, refer to the applicable table in the fan performance section.
4. Direct drive fan motor heat is negligible.
5. Factory supplied motors, in commercial equipment, are definite purpose motors, specifically designed and tested to operate reliably and continuously at all cataloged conditions. Using the full horsepower range of our fan motors as shown in our tabular data will not result in nuisance tripping or premature motor failure. Our product's warranty will not be affected.

Table 38. Evaporator fan performance — 25 ton, model DHJ, horizontal, high static drive

Available External Static Pressure (Inches of Water Gauge)																				
	0.10"		0.20"		0.30"		0.40"		0.50"		0.60"		0.70"		0.80"		0.90"		1.00"	
CFM	RPM	BHP	RPM	BHP	RPM	BHP	RPM	BHP	RPM	BHP	RPM	BHP	RPM	BHP	RPM	BHP	RPM	BHP	RPM	BHP
	5-hp Oversized Motor																			
7500	1054	1.29	1085	1.44	1117	1.60	1147	1.76	1175	1.93	1203	2.09	1231	2.26	1258	2.43	1285	2.60	1312	2.78
8000	1121	1.54	1149	1.70	1179	1.87	1208	2.04	1235	2.22	1262	2.39	1288	2.57	1314	2.75	1339	2.93	1365	3.11
9000	1255	2.15	1278	2.32	1306	2.51	1332	2.70	1357	2.90	1382	3.09	1406	3.29	1429	3.49	1452	3.68	1476	3.89
10000	1389	2.91	1410	3.09	1434	3.29	1458	3.50	1482	3.72	1504	3.93	1527	4.15	1548	4.37	1569	4.59	1590	4.81
11000	1524	3.83	1543	4.03	1563	4.23	1585	4.47	1607	4.70	1629	4.94	1649	5.18	1670	5.41	1690	5.65	1709	5.89
12000	1659	4.93	1677	5.15	1694	5.37	1714	5.61	1734	5.86	1754	6.12	1774	6.37	1793	6.63	1812	6.89	1830	7.15
Available External Static Pressure (Inches of Water Gauge)																				
	1.10"		1.20"		1.30"		1.40"		1.50"		1.60"		1.70"		1.80"		1.90"		2.00"	
CFM	RPM	BHP	RPM	BHP	RPM	BHP	RPM	BHP	RPM	BHP	RPM	BHP	RPM	BHP	RPM	BHP	RPM	BHP	RPM	BHP
	5-hp Oversized Motor																			
7500	1338	2.96	1362	3.14	1385	3.32	1407	3.49	1429	3.67	1452	3.86	1475	4.04	1497	4.22	1518	4.41	1539	4.60
8000	1390	3.30	1415	3.49	1439	3.69	1461	3.88	1482	4.07	1503	4.26	1523	4.45	1545	4.64	1566	4.83	1587	5.03
9000	1498	4.09	1520	4.29	1543	4.5	1566	4.72	1587	4.94	1609	5.15	1630	5.37	1649	5.58	1668	5.79	1686	6.01
10000	1611	5.03	1632	5.25	1653	5.48	1673	5.70	1693	5.93	1714	6.17	1734	6.41	1754	6.65	1773	6.89	1792	7.13
11000	1729	6.13	1747	6.38	1767	6.62	1786	6.86	1805	7.11	1823	7.36	1841	7.60	1860	7.86	1878	8.12	1897	8.38
12000	1849	7.41	1867	7.67	1884	7.94	1901	8.20	-	-	-	-	-	-	-	-	-	-	-	-

Notes:

1. Available External Static Pressure is the static pressure difference between the return duct and the supply duct plus the static pressure drop caused by accessories and options.
2. Data includes pressure drop due to standard filters, wet coils, and high gas heat. No accessories or options are included in pressure drop data.
3. To determine static pressure drop due to other options/accessories, refer to the applicable table in the fan performance section.
4. Direct drive fan motor heat is negligible.
5. Factory supplied motors, in commercial equipment, are definite purpose motors, specifically designed and tested to operate reliably and continuously at all cataloged conditions. Using the full horsepower range of our fan motors as shown in our tabular data will not result in nuisance tripping or premature motor failure. Our product's warranty will not be affected.

Fan Performance

Table 39. Outdoor sound power level

Tons	Unit Model Number	Octave Center Frequency								Overall dBA
		63	125	250	500	1000	2000	4000	8000	
12.5	W/DHJ150A*	83	87	87	85	82	77	74	69	87
15	W/DHJ180A*	83	87	87	85	82	77	74	69	87
20	W/DHJ240A*	94	90	92	91	88	84	81	75	93
25	W/DHJ300A*	94	90	92	91	88	84	81	75	93

Notes:

1. Outdoor sound rating shown is tested in accordance with AHRI 370-2015.
2. Indoor sound in accordance with AHRI 260 is available through Trane's selection software.

Table 40. Static pressure drop through accessories (inches water column) - high efficiency - economizer

Tons	Unit Model Number	cfm[a]	Standard Filters[b]	2" MERV 8 Filter[c]	2" MERV 13 Filter[c]	Reheat Coil	Economizer with OA/RA Dampers[d]							
							Downflow		Horizontal		Low Leak Downflow		Low Leak Horizontal	
							100% OA	100% RA	100% OA	100% RA	100% OA	100% RA	100% OA	100% RA
12.5	W/DHJ150A	3750	0.02	0.04	0.07	0.02	0.10	0.02	0.10	0.02	0.11	0.09	0.05	0.09
		5000	0.03	0.06	0.10	0.04	0.15	0.03	0.15	0.03	0.17	0.13	0.09	0.14
		6000	0.04	0.08	0.13	0.04	0.20	0.04	0.20	0.04	0.23	0.17	0.12	0.18
15	W/DHJ180A	4500	0.03	0.05	0.09	0.04	0.13	0.02	0.13	0.02	0.14	0.11	0.07	0.12
		6000	0.04	0.08	0.13	0.04	0.20	0.04	0.20	0.04	0.23	0.17	0.12	0.18
		7200	0.06	0.10	0.17	0.02	0.27	0.05	0.27	0.05	0.32	0.23	0.16	0.25
20	W/DHJ240A	6000	0.04	0.08	0.13	0.04	0.20	0.04	0.20	0.04	0.23	0.17	0.12	0.18
		8000	0.07	0.12	0.21	0.02	0.32	0.06	0.32	0.06	0.39	0.27	0.19	0.30
		9600	0.09	0.16	0.27	0.05	0.44	0.07	0.44	0.07	0.54	0.37	0.27	0.41
25	W/DHJ300A	7500	0.06	0.11	0.19	0.02	0.29	0.05	0.29	0.05	0.34	0.24	0.17	0.27
		10000	0.09	0.17	0.29	0.06	0.48	0.08	0.48	0.08	0.58	0.40	0.29	0.45
		12000	0.12	0.23	0.39	0.06	0.66	0.11	0.66	0.11	0.82	0.55	0.39	0.62

(a) See below for restrictions:
Multi-speed, single zone VAV or multi-zone VAV applications are capable of running below 300 cfm/ton during low speed airflow operation.
(b) Tested with: 2-in filters 12.5 to 25 tons.
(c) Difference in pressure drop should be considered when utilizing optional 2-in pleated filters.
(d) OA = Outside Air and RA = Return Air.

Table 41. Static pressure drop through accessories (inches water column) - high efficiency - auxiliary heater

Tons	Unit Model Number	cfm[a]	Electric Heater				Gas Heater[b]					
			Accessory (kW)				Downflow			Horizontal		
			18	36	54	72	L	M	H	L	M	H
12.5	W/DHJ150A	3750	0.00	0.01	0.01	N/A	-0.09	-0.08	-0.08	0.03	0.03	0.06
		5000	0.01	0.03	0.03	N/A	-0.06	-0.04	-0.05	0.10	0.10	0.12
		6000	0.01	0.04	0.04	N/A	-0.03	-0.02	-0.02	0.12	0.13	0.16
15	W/DHJ180A	4500	0.01	0.02	0.02	N/A	-0.07	-0.05	-0.06	0.08	0.08	0.10
		6000	0.01	0.04	0.04	N/A	-0.03	-0.02	-0.02	0.12	0.13	0.16
		7200	0.02	0.06	0.06	N/A	-0.01	0.00	0.01	0.11	0.13	0.19
20	W/DHJ240A	6000	N/A	0.04	0.04	0.04	-0.03	-0.02	-0.02	0.12	0.13	0.16
		8000	N/A	0.08	0.08	0.08	0.01	0.01	0.03	0.10	0.13	0.19
		9600	N/A	0.12	0.12	0.12	0.04	0.05	0.07	0.10	0.14	0.21

Table 41. Static pressure drop through accessories (inches water column) - high efficiency - auxiliary heater (continued)

Tons	Unit Model Number	cfm[a]	Electric Heater				Gas Heater[b]					
			Accessory (kW)				Downflow			Horizontal		
			18	36	54	72	L	M	H	L	M	H
25	W/DHJ300A	7500	N/A	0.07	0.07	0.07	0.00	0.00	0.01	0.11	0.13	0.19
		10000	N/A	0.13	0.13	0.13	0.06	0.07	0.08	0.11	0.15	0.21
		12000	N/A	0.20	0.20	0.20	0.14	0.15	0.14	0.16	0.21	0.31

(a) See below for restrictions:
Multi-speed, single zone VAV or multi-zone VAV applications are capable of running below 300 cfm/ton during low speed airflow operation.
(b) Model digit 11 selection of low gas heat is 5x5, medium gas heat is 7x7, and high gas heat is 8x8 for 12.5 to 25T units.

Table 42. Static pressure drop through accessories (inches water column) - high efficiency - modulating gas heat option

Tons	Unit Model Number	cfm	Gas Heater[a]			
			Downflow		Horizontal	
			L	H	L	H
12.5	DHJ150A	3750	-	0.04	-	0.07
		5000	-	0.08	-	0.13
		6000	-	0.11	-	0.20
15	DHJ180A	4500	0.06	0.09	0.11	0.15
		6000	0.11	0.19	0.20	0.28
		7200	0.16	0.28	0.29	0.42
20	DHJ240A	6000	0.11	0.19	0.20	0.28
		8000	0.20	0.36	0.36	0.52
		9600	0.30	0.53	0.52	0.75
25	DHJ300A	7500	0.18	0.31	0.31	0.45
		10000	0.33	0.58	0.56	0.82
		12000	0.49	0.87	0.81	1.17

(a) Model digit 10 selection B is Mod Gas of which Low Gas Heat is 2x2 for 6T, 4x4 for 7.5 to 12.5T, High Gas Heat is 4x4 for 6T, 6x6 for 7.5 to 12.5T. 12.5T D.0 is High only with 6-Tube. 15 to 25T units are Low with 6-Tube and High with 8-Tube.

Heating Performance

Table 43. Gas fired heating capacities - staged gas - dual fuel high efficiency

Tons	Unit Model Number	Heating Input BTU (High / Low Stage)	Heating Output BTU (High / Low Stage)	Air Temperature Rise°F
12.5	DHJ150A**(0,A)L	150,000 / 105,000	121,500 / 85,000	10 - 40
	DHJ150A**(0,A)M	200,000 / 140,000	162,000 / 113,400	15 - 45
	DHJ150A**(0,A)H	250,000 / 175,000	202,500 / 141,750	25 - 55
15	DHJ180A**(0,A)L	250,000 / 175,000	202,500 / 141,750	15 - 45
	DHJ180A**(0,A)M	320,000 / 224,000	259,200 / 181,440	20 - 50
	DHJ180A**(0,A)H	400,000 / 280,000	324,000 / 226,800	25 - 55
20	DHJ240A**(0,A)L	250,000 / 175,000	202,500 / 141,750	10 - 40
	DHJ240A**(0,A)M	320,000 / 224,000	259,200 / 181,440	15 - 45
	DHJ240A**(0,A)H	400,000 / 280,000	324,000 / 226,800	20 - 50
25	DHJ300A**(0,A)L	250,000 / 175,000	202,500 / 141,750	10 - 40
	DHJ300A**(0,A)M	320,000 / 224,000	259,200 / 181,440	15 - 45
	DHJ300A**(0,A)H	400,000 / 280,000	324,000 / 226,800	20 - 50

Table 44. Gas-fired heating capacities - modulating gas - dual fuel high efficiency

Tons	Unit Model Number	Heating Input BTU (High / Low Stage)	Heating Output BTU (High / Low Stage)	Air Temperature Rise°F
12.5	DHJ150A**BH	250,000 / 25,000	202,500 / 20,250	5 - 55
15	DHJ180A**BL	250,000 / 25,000	202,500 / 20,250	5 - 45
	DHJ180A**BH	400,000 / 40,000	324,000 / 32,400	5 - 55
20	DHJ240A**BL	250,000 / 25,000	202,500 / 20,250	5 - 40
	DHJ240A**BH	400,000 / 40,000	324,000 / 32,400	5 - 50
25	DHJ300A**BL	250,000 / 25,000	202,500 / 20,250	5 - 40
	DHJ300A**BH	400,000 / 40,000	324,000 / 32,400	5 - 50

Table 45. Auxiliary electric heat capacity

Tons	Unit Model Number	Total[a]		No. of Stages	Stage 1		Stage 2	
		kw Input[b]	MBh Output		kw Input	MBh Output	kw Input	MBh Output
12.5 to 15	WH*150*3,4,W WH*180*3,4,W	18.00	61.47	1	18.00	61.47	–	–
		36.00	122.94	2	18.00	61.47	18.00	61.47
		54.00	184.41	2	36.00	122.94	18.00	61.47
20 to 25	WH*240*3,4,W WH*300*3,4,W	36.00	122.94	2	18.00	61.47	18.00	61.47
		54.00	184.41	2	36.00	122.94	18.00	61.47
		72	245.88	2	36	122.94	36	122.94

(a) Heaters are rated at 240V, 480V, and 600V. For other than rated voltage, CAP = (voltage/rated voltage)2 x rated cap.
(b) For all input/output categories, does not include fan power or heat.

Table 46. Auxiliary electric heat - air temperature rise

kW	Stages	12.5 Tons 3750 cfm	15 Tons 4500 cfm	20 Tons 6000 cfm	25 Tons 7500 cfm
		Three Phase WH*150*3,4,W	Three Phase WH*180*3,4,W	Three Phase WH*240*3,4,W	Three Phase WH*300*3,4,W
18.00	1	15.17	12.64	-	-
27.00	2	22.76	-	-	-
36.00	2	30.35	25.28	18.96	15.17
54.00	2	45.52	37.93	28.45	22.76
72.00	2	-	-	37.93	30.34

Note: For minimum design airflow, see airflow performance table for each unit. To calculate temp. rise at different airflow, use the following formula:
Temp. rise across electric heater = (kW x 3414)/(1.08 x cfm).

Controls

Enhanced BAS Integration and Connectivity

- Symbio™ 700 integrates seamlessly with Trane® Tracer® Synchrony and Tracer Ensemble® to deliver optimized building automation and building management features and functions.
- Easily integrate with open standard protocols to connect seamlessly to a BAS (whether that is Trane or non-Trane).
- Digit 21 must equal 1, 2, or 3 for communication support.

BACnet® Communications

Symbio™ 700 includes native BACnet communications which allows the unit to communicate directly with a Tracer or non-Trane Building Automation System via open protocol BACnet MS/TP or IP.

Modbus Communications

Symbio 700 includes native Modbus communications which allows the unit to communicate directly with a Tracer or non-Trane Building Automation System via open protocol Modbus RTU or TCP/IP.

LonTalk® Communications

The optional LonTalk® communications module allows the unit to communicate directly with a Tracer or non-Trane Building Automation System via open protocol LonTalk.

Air-Fi® Wireless Communications

The optional Air-Fi communications module allows the unit to communicate directly with a Tracer Building Automation System via open protocol BACnet over Zigbee wireless.

Secure Remote Connectivity with Trane Connect

The Symbio controller enables secure remote connectivity via Trane Connect to Trane Intelligent Services and remote monitoring. Trane Connect provides anywhere/anytime access to monitor and manage with secure remote access and connectivity options through a multitude of platforms. Peace of mind that the system will be operational and provide comfort to customers.

Serviceability

Symbio™ Service and Installation Mobile App

The Symbio™ Service and Installation mobile app is accessible through mobile devices (phones and tablets) via Bluetooth connectivity or via Trane Connect. The intuitive mobile app feels natural to technicians and operators. They will quickly be able to view equipment status and alarms, perform startup tasks, change configurations, test the equipment's performance in specific modes—and much more. Free for download from App Store (Apple iOS) and Google Play (Android devices).

To download the Symbio™ Service and Installation Mobile App use the links below or scan the code with your mobile phone camera.

Apple download link (https://apps.apple.com/us/app/symbio-service-installation/id1309310176)

Google Play (Android) download link (https://play.google.com/store/apps/details?id=com.trane.mobileservicetool)

Figure 3. Scan code

Figure 4. Symbio™ service and installation mobile app

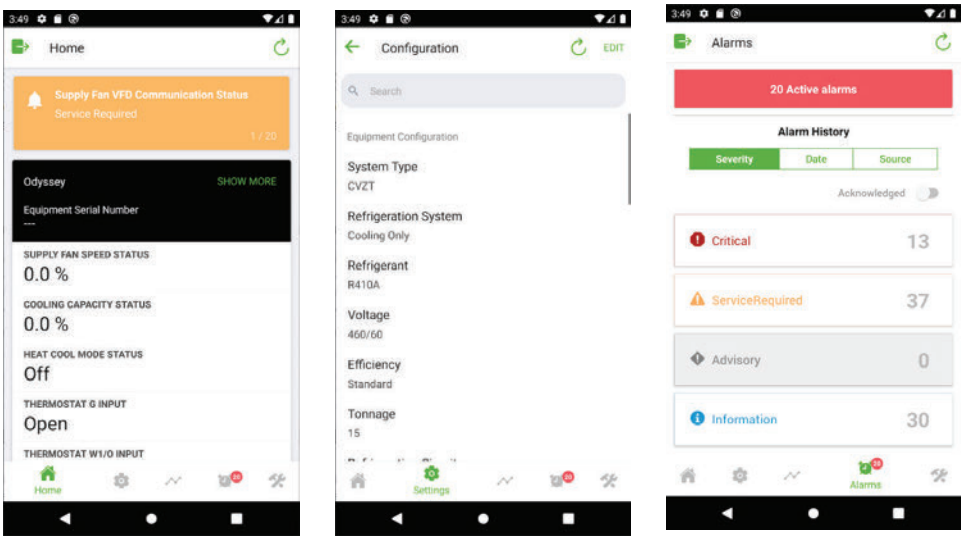

Onboard User Interface

An integrated onboard user interface that makes setup and continued operation easy. It provides real time operational performance, status, data, and alarms. It also allows the user to interact with, service, troubleshoot, and control their equipment without additional service software tools or when a mobile interface is not available.

Figure 5. Onboard user interface

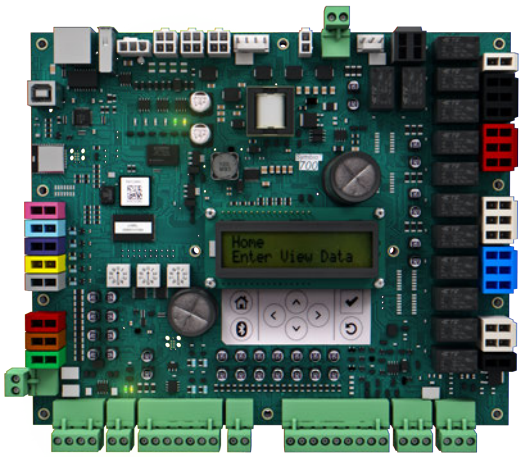

Service Test Mode

Symbio™ 700 requires no special tools to run the unit through its paces. Simply navigate to the 'Service' section of the on-board user interface or the 'Tools' section of the Symbio™ Service and Installation Mobile App and enter the 'Service Test Mode' section. Here the unit can be placed in the desired operating condition for a pre-determined amount of time supporting troubleshooting efforts in the field. The Symbio™ 700 will return to normal control when the user exits test mode or when the pre-determined, user-selected Service Test time has expired.

Symbio™ 700 controls with upgradeable software

Trane's equipment and systems feature engineered, tested, and proven applications that meet industry energy standards and provide the flexibility to customize and update over the life of the equipment. Professional operational algorithms are embedded within the Symbio™ 700 controller at the Trane factory. Symbio™ 700 standardizes each equipment unit to maintain standards for comfort, efficiency, and air quality, without additional field programming. Symbio™ 700 provides the flexibility over the life of the equipment to meet changing customer needs and/or industry standards.

Flexibility

Expansion Modules (requires Tracer® TU)

- XM30 – Provides 4 universal inputs or analog outputs
- XM32 – Provides 4 binary outputs

Field Programming via TGP2 (requires Tracer TU)

- Control ancillary equipment
- Custom sequences

TGP2 and XM Limitations:

- Programs will only have access to available BACnet® points. (Ensures system reliability.)
- TGP2 programs will not have direct I/O control access for factory components. (Compressors will not be able to be directly controlled On/Off without going through factory provided protection sequences.)
- Onboard I/O will not be available to custom applied TGP2 programs. If additional I/O is required for a new control loop, a separate expansion module will be required.
- Customer applied I/O will be limited to a maximum combination of 2 XM modules. Only XM30 or XM32 modules will be supported by the Symbio 700 UC.
- Tracer TU will be required to configure XMs and to create, view, or modify TGP2 programs.

Economizer Controls

There are four options for economizer control, Dry Bulb Temperature, Comparative Enthalpy, Reference Enthalpy and Differential Dry Bulb Temperature.

Dry Bulb Temperature Control

The dry bulb system measures outdoor temperature comparing it to the economizer enable setpoint. If the outdoor temperature is below the economizer enable setpoint, the economizer will operate freely. This system is best suited for arid regions where the humidity levels of outside air would not be detrimental to building comfort and indoor air quality.

Comparative Enthalpy Control

The comparative enthalpy system measures the temperature and humidity of both return air and outside air to determine which source has lower enthalpy. This system allows true comparison of outdoor air and return air enthalpy by measurement of outdoor air and return air temperature and humidity.

Reference Enthalpy Control

The reference enthalpy system compares outdoor air temperature and humidity to the economizer enthalpy enable setpoint. If outdoor air temperature and humidity are below the economizer enthalpy

enable setpoint, the economizer will operate freely. This system provides more sophisticated control where outdoor air humidity levels may not be acceptable for building comfort and indoor air quality.

Differential Dry Bulb Temperature Control

The differential dry bulb system measures the temperature of both return air and outside air to determine when to economize. If outdoor air temperature is below the return air temperature minus a differential, the economizer will operate freely. This system is best suited for arid regions where the humidity levels of outside air would not be detrimental to building comfort and indoor air quality.

Zone Sensors

Zone Temperature Only

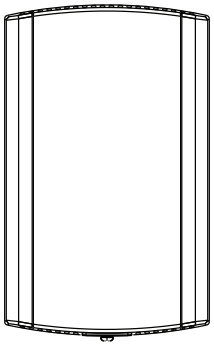

BAYSENS077

Provides temperature input only. Can be used as a secondary remote temperature input for thermostats.

Manual Changeover

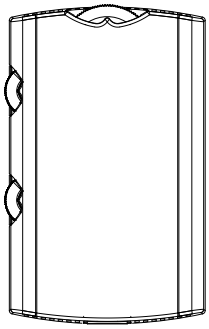

BAYSENS106

Heat, Cool or Off System Switch. Fan Auto or Off Switch. Single temperature setpoint thumbwheel.

Manual/Automatic Changeover

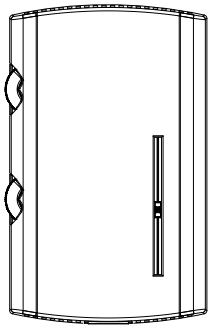

BAYSENS108

Auto, Heat, Cool or Off System Switch. Fan Auto or Off Switch. Dual temperature setpoint sliders

Integrated Comfort™ System

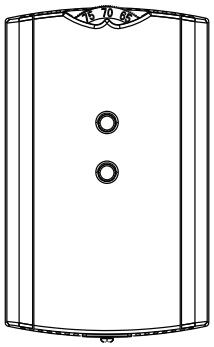

BAYSENS073 / BAYSENS074 / BAYSENS075

Sensor(s) available with optional temperature adjustment and override buttons to provide central control through a Trane Integrated Comfort system.

Wired Display Sensor

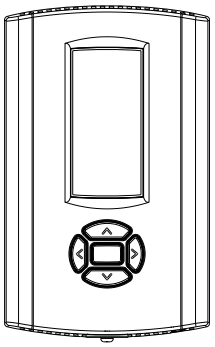

BAYSENS135

LCD display that provides heat, cool, auto, or off. Includes two temperature setpoints and a lockable setting with °F or °C indicators.

Touchscreen Digital Display Communicating Sensor

BAYSENS800

Uses BACnet® MS/TP link to communicate zone temperature and setpoints. Auto, Heat, Cool or Off System Switch. Fan Auto or On Switch. 7-day programmable thermostat with night setback.

Note: *Not compatible with VAV units. Requires BACnet communications.*

Air-Fi Wireless Communicating Zone Sensors

Wireless Zone Temperature Only

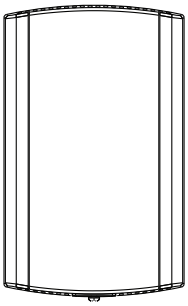

BAYSENS203

Measures temperature and optional humidity (with WCS-SH) for use in public spaces where no local user interface is preferred.

Note: *Requires BACnet communications.*

Wireless Display Sensor

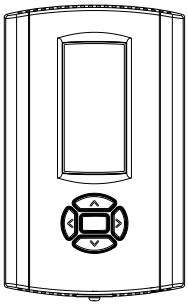

BAYSENS202

Easy-to-use interface for clear and simple monitoring and control. Can be configured for any Trane system or to meet the customer's preference.

Note: *Requires BACnet communications.*

Wired CO_2 Sensor

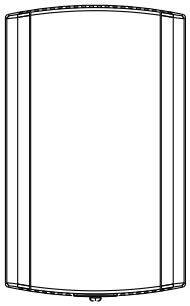

FIACO2K001 wall mount CO_2 Sensor
FIACO2K002 duct mount CO_2 Sensor

The maintenance-free carbon dioxide (CO_2) sensor is primarily used for demand control ventilation applications.

Wired Zone Temperature and Humidity Sensor

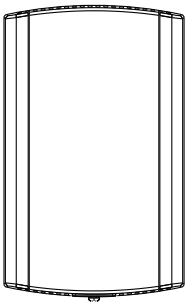

BAYSENS036

Measures temperature and relative humidity. Relative humidity input is used to control activation of dehumidification.

Thermostats

Digital Display Programmable Thermostat (3H/2C)

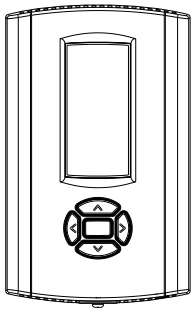

BAYSTAT150

Three Heat/Two Cool Auto changeover digital display thermostat. 7-day programmable thermostat with night setback.

Note: *Not compatible with VAV units.*

Digital Display Programmable Thermostat (1H/1C)

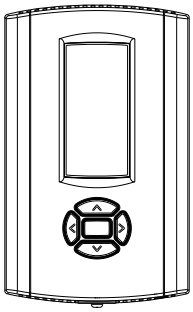

BAYSTAT151

One Heat/One Cool Auto changeover digital display thermostat.

Note: *Not compatible with VAV units.*

Digital Display Thermostat (3H/2C)

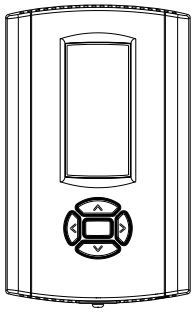

BAYSTAT155

Three Heat/Two Cool Auto changeover display thermostat.

Note: *Not compatible with VAV units.*

Pivot® Web Enabled Smart Thermostat (3H/2C)

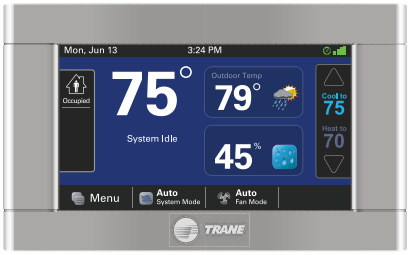

BAYSTAT814

Our Pivot Smart Thermostat system is great for commercial buildings. With its intuitive touchscreen and customizable display, it is easy for occupants to use. The Trane Pivot mobile app enables users to control multiple buildings remotely, making changes in seconds to all systems.

Note: *Not compatible with VAV units.*

Touchscreen Programmable Thermostat with Relative Humidity Sensor (3H/2C)

BAYSTAT152

Three Heat, Two Cool digital display thermostat with built-in humidity control. This thermostat combines both humidity and temperature into one.

Note: *Not compatible with VAV units.*

Humidity Control (HGRH)

Sequence of Operations

Humidity Control system capable of operating in normal cooling, dual mode to satisfy cooling and humidity requirements, and hot gas reheat mode when only humidity demand is required. Function between requirements and unit transition seamlessly providing an all-around comfort solution.

Note: *Supports Humidistat control. When the Humidistat input becomes active, compressors will stage to full capacity and modulate the 3 way valve.*

Initiation of Humidity Control

- Conforms to ASHRAE standard (62)
- Dehumidification is initiated when too much moisture is in the space (>60°F Dew point)
  - Two measurement options for this dehumidification status:
  - Humidity control is started when:
    - Dew point is too high (60°F is default),
    - Relative Humidity is too high (60% is default), DH is started
    - Choice between these values above is user-configurable, and the actual values are adjustable by customer if desired
- Reheat circuit is initiated when space temperature drops below setpoint during humidity control.

Humidity Control Routine

There are two independent control loops: One to control latent load, the other to control sensible load.

Latent load is controlled by compressor staging:

- Compressors initially move up one stage from the last cooling mode stage.
- Compressors are staged up as needed by the controller to achieve a target leaving ID air dew point based on space conditions.

Sensible load is controlled with the Modulating 3 way valve:

- Modulating valve opens when space temperature is below setpoint.
- The reheat valve adjusts the amount of flow to RH coil to achieve the targeted leaving ID air temperature, based on space conditions.

Purge Cycle

During dehumidification, every 120 minutes (default) a 3 minute cooling “purge cycle” will be executed. This purge cycle is executed for system reliability, specifically it helps manage oil return to compressors.

- Modulating valve moves to a fixed position based on OD air and compressor stage.
- Compressors move to full load.

Leaving Humidity Control and Returning to Cooling Only

- When space humidity drops to below the threshold humidity value (60°F dew point or 60% relative humidity), system reverts back to cooling mode. Dead band of ~5°F yields approximately 55°F dew point for switch to cooling.
- Unit can stay in humidity control mode indefinitely, with purge cycles happening regularly.
  - Relative humidity setpoint is 65% for unoccupied mode.
  - Dew point for unoccupied mode is the same as occupied (default 60°F DP).

Indoor Fan

Indoor fan minimum percent follows compressor staging. See Symbio™ 700 Controller with Precedent™ Packaged Rooftop Air Conditioners Application Guide (ACC-APG002*-EN).

Electrical Data

Table 47. Unit wiring, high efficiency

Tons	Unit Model Number	Voltage Range	Standard Indoor Fan Motor		Oversized/High Static Indoor Fan Motor		Optional Power Exhaust Standard Indoor Fan Motor		Optional Power Exhaust Oversized/High Static Indoor Fan Motor	
			MCA	Max Fuse Size or Max Circuit Breaker	MCA	Max Fuse Size or Max Circuit Breaker	MCA	Max Fuse Size or Max Circuit Breaker	MCA	Max Fuse Size or Max Circuit Breaker
12.5	W/DHJ150A3	187-253	72	90	-	-	78	100	-	-
	W/DHJ150A4	414-506	37	50	-	-	40	50	-	-
	W/DHJ150AW	517-633	29	40	-	-	32	40	-	-
15	W/DHJ180A3	187-253	78	100	-	-	83	110	-	-
	W/DHJ180A4	414-506	41	50	-	-	45	60	-	-
	W/DHJ180AW	517-633	32	40	-	-	34	45	-	-
20	WHJ240A3 DHJ240A3S(0,A)	187-253	108	150	-	-	113	150	-	-
	WHJ240A4 DHJ240A4S(0,A)	414-506	54	70	-	-	57	70	-	-
	WHJ240AW DHJ240AWS(0,A)	517-633	47	60	-	-	49	70	-	-
	DHJ240A3SB	187-253	108	150	112	150	113	150	118	150
	DHJ240A4SB	414-506	54	70	55	70	57	70	59	70
	DHJ240AWSB	517-633	47	60	48	60	49	70	51	70
25	W/DHJ300A3	187-253	119	150	124	150	125	150	129	175
	W/DHJ300A4	414-506	59	80	61	80	62	80	64	80
	W/DHJ300AW	517-633	46	60	48	60	48	60	50	60

Table 48. Unit wiring with electric heat, high efficiency

Tons	Unit Model Number	Heater Model Number	Heater kW Rating	Control Stages	Standard Indoor Fan Motor[a]		Oversized/High Static Indoor Fan Motor		Optional Power Exhaust Standard Indoor Fan Motor		Optional Power Exhaust Oversized/High Static Indoor Fan Motor	
					MCA	Max Fuse Size or Max Circuit Breaker	MCA	Max Fuse Size or Max Circuit Breaker	MCA	Max Fuse Size or Max Circuit Breaker	MCA	Max Fuse Size or Max Circuit Breaker
208/230 Volts Three Phase												
12.5	WHJ150A3	FIAEHWD318AA	13.5/18.0	1	119/126	125/150	-	-	125/132	125/150	-	-
		FIAEHWD336AA	27.0/36.0	2	166/180	175/200	-	-	172/186	175/200	-	-
		FIAEHWD354AA	40.6/54.0	2	213/202	225/225	-	-	219/208	225/225	-	-
15	WHJ180A3	FIAEHWD318AA	13.5/18.0	1	124/132	125/150	-	-	130/137	150/150	-	-
		FIAEHWD336AA	27.0/36.0	2	171/186	175/200	-	-	177/191	200/200	-	-
		FIAEHWD354AA	40.6/54.0	2	218/207	225/225	-	-	224/213	225/225	-	-

Table 48. Unit wiring with electric heat, high efficiency (continued)

Tons	Unit Model Number	Heater Model Number	Heater kW Rating	Control Stages	Standard Indoor Fan Motor[a]		Oversized/High Static Indoor Fan Motor		Optional Power Exhaust Standard Indoor Fan Motor		Optional Power Exhaust Oversized/High Static Indoor Fan Motor	
					MCA	Max Fuse Size or Max Circuit Breaker	MCA	Max Fuse Size or Max Circuit Breaker	MCA	Max Fuse Size or Max Circuit Breaker	MCA	Max Fuse Size or Max Circuit Breaker
20	WHJ240A3	FIAEHWD336AA	27.0/36.0	2	201/216	225/225	-	-	207/222	225/225	-	-
		FIAEHWD354AA	40.6/54.0	2	248/238	300/300	-	-	254/243	300/250	-	-
		FIAEHWD372AA	54.0/72.0	2	258/281	300/300	-	-	263/287	300/300	-	-
25	WHJ300A3	FIAEHWD336AA	27.0/36.0	2	213/227	225/250	214/232	225/250	219/233	225/250	223/238	250/250
		FIAEHWD354AA	40.6/54.0	2	260/249	300/300	264/254	300/300	266/255	300/300	270/259	300/300
		FIAEHWD372AA	54.0/72.0	2	269/292	300/300	274/297	300/300	275/298	300/300	279/303	300/350
460 Volts Three Phase												
12.5	WHJ150A4	FIAEHWD418AA	18	1	64	70	-	-	67	70	-	-
		FIAEHWD436AA	36	2	91	100	-	-	94	100	-	-
		FIAEHWD454AA	54	2	102	110	-	-	105	110	-	-
15	WHJ180A4	FIAEHWD418AA	18	1	68	70	-	-	72	80	-	-
		FIAEHWD436AA	36	2	96	100	-	-	99	100	-	-
		FIAEHWD454AA	54	2	106	110	-	-	110	125	-	-
20	WHJ240A4	FIAEHWD436AA	36	2	108	110	-	-	111	125	-	-
		FIAEHWD454AA	54	2	119	150	-	-	122	125	-	-
		FIAEHWD472AA	72	2	140	150	-	-	143	150	-	-
25	WHJ300A4	FIAEHWD436AA	36	2	113	125	115	125	116	125	118	125
		FIAEHWD454AA	54	2	124	150	126	150	127	150	129	150
		FIAEHWD472AA	72	2	146	150	147	150	149	150	151	175
575 Volts Three Phase												
12.5	WHJ150AW	FIAEHWDW18AA	18	1	51	60	-	-	53	60	-	-
		FIAEHWDW36AA	36	2	73	80	-	-	75	80	-	-
		FIAEHWDW54AA	54	2	81	90	-	-	84	90	-	-
15	WHJ180AW	FIAEHWDW18AA	18	1	53	60	-	-	56	60	-	-
		FIAEHWDW36AA	36	2	75	80	-	-	77	80	-	-
		FIAEHWDW54AA	54	2	84	90	-	-	86	90	-	-
20	WHJ240AW	FIAEHWDW36AA	36	2	90	100	-	-	93	100	-	-
		FIAEHWDW54AA	54	2	99	125	-	-	101	110	-	-
		FIAEHWDW72AA	72	2	116	125	-	-	119	125	-	-
25	WHJ300AW	FIAEHWDW36AA	36	2	89	100	91	100	92	100	93	100
		FIAEHWDW54AA	54	2	98	125	100	110	100	110	102	110
		FIAEHWDW72AA	72	2	115	125	117	125	118	125	119	125

[a] The standard motor is a multispeed, direct drive motor.

Table 49. Electrical characteristics - compressor motor and condenser motor

Tons	Unit Model Number	No.	Compressor Motors						No.	Condenser Fan Motor				
			Volts	Phase	hp[a]	rpm	Amps[b]			Volts	Phase	hp	Amps	
							RLA	LRA					FLA	LRA
12.5	W/DHJ150A3	2	208/230	3	7.6/3.5	3500/3500	28.4/14.1	191.0/83.1	2	208/230	3	0.5	2.2	7.3
	W/DHJ150A4	2	460	3	7.6/3.5	3500/3500	14.6/6.5	100/41	2	460	3	0.5	1.3	4.2
	W/DHJ150AW	2	575	3	7.6/3.5	3500/3500	11.9/5.4	78/33	2	575	3	0.5	1.1	3.6
15	W/DHJ180A3	2	208/230	3	8.7/4.3	3500/3500	30.9/16.4	240/110	2	208/230	3	0.5	2.2	7.3
	W/DHJ180A4	2	460	3	8.7/4.3	3500/3500	16.7/8.2	130/52	2	460	3	0.5	1.3	4.2
	W/DHJ180AW	2	575	3	8.7/4.3	3500/3500	12.8/6.6	93.7/38.9	2	575	3	0.5	1.1	3.6
20	W/DHJ240A3	2	208/230	3	11.4/6.3	3500/3500	43.1/26.1	270/167	2	208/230	3	1	4.8	19.4
	W/DHJ240A4	2	460	3	11.4/6.3	3500/3500	21.3/12.2	147/84	2	460	3	1	2.5	10.1
	W/DHJ240AW	2	575	3	11.4/6.3	3500/3500	21.3/9.6	109/60	2	575	3	1	1.9	8.0
25	W/DHJ300A3	2	208/230	3	12.8/7.6	3500/3500	49.5/29.6	335.5/223.0	2	208/230	3	1	4.8	19.4
	W/DHJ300A4	2	460	3	12.8/7.6	3500/3500	23.9/14.4	141/100	2	460	3	1	2.5	10.1
	W/DHJ300AW	2	575	3	12.8/7.6	3500/3500	19.8/10.8	109/70	2	575	3	1	1.9	8.0

(a) Hp for each compressor.
(b) Amp draw for each motor (compressor and condenser fan motor); multiply value by number of motors to determine total amps.

Table 50. Electrical characteristics - indoor fan motor

Tons	Unit Model Number	No.	Volts	Phase	hp	Amps[a]	
						FLA	LRA
12.5	W/DHJ150A3	2	208/230	3	3	8.8	-
	W/DHJ150A4	2	460	3	3	4.6	-
	W/DHJ150AW	2	575	3	3	3.2	-
15	W/DHJ180A3	2	208/230	3	3	8.8	-
	W/DHJ180A4	2	460	3	3	4.6	-
	W/DHJ180AW	2	575	3	3	3.2	-
20	W/DHJ240A3	2	208/230	3	3	8.8	-
	W/DHJ240A4	2	460	3	3	4.6	-
	W/DHJ240AW	2	575	3	3	3.2	-
25	W/DHJ300A3	2	208/230	3	3	8.8	-
	W/DHJ300A4	2	460	3	3	4.6	-
	W/DHJ300AW	2	575	3	3	3.2	-

(a) Amp draw for each motor (compressor and condenser fan motor); multiply value by number of motors to determine total amps.

Table 51. Electrical characteristics - oversized indoor fan motor

Tons	Unit Model Number	No.	Volts	Phase	hp	Amps[a]	
						FLA	LRA
20	DHJ240A3SB	2	208/230	3	5	11.0	-
	DHJ240A4SB	2	460	3	5	5.5	-
	DHJ240AWSB	2	575	3	5	3.9	-
25	W/DHJ300A3	2	208/230	3	5	11.0	-
	W/DHJ300A4	2	460	3	5	5.5	-
	W/DHJ300AW	2	575	3	5	3.9	-

(a) Amp draw for each motor (compressor and condenser fan motor); multiply value by number of motors to determine total amps.

Table 52. Electrical characteristics - power exhaust

Tons	Volts	Phase	hp	rpm	FLA	LRA
12.5-25	208-230	1	0.87	1075	5.7	13.6
12.5-25	460	1	0.87	1075	3.3	7.2
12.5-25	575	1	0.80	1075	2.3	5.8

Table 53. Electrical characteristics - inducer motor

Unit Model Number	Stages	hp	rpm	Volts	Phase	FLA	LRA
DHJ150A**(0,A)(L,M,H)	2	1/15	3300/2800	208-230	1	0.36/0.30	0.73
DHJ(180-300)A**(0,A)(L,M)	2	1/15	3300/2800	208-230	1	0.36/0.30	0.73
DHJ(180-300)A**(0,A)H	2	1/6	3300/2300	208-230	1	0.95/0.49	1.53
DHJ(150,180,210,240,300)A**B	Variable	1/15	3300	115	1	3.40	7.30

Dimensional Data

Figure 6. 12.5 to 15 tons high efficiency

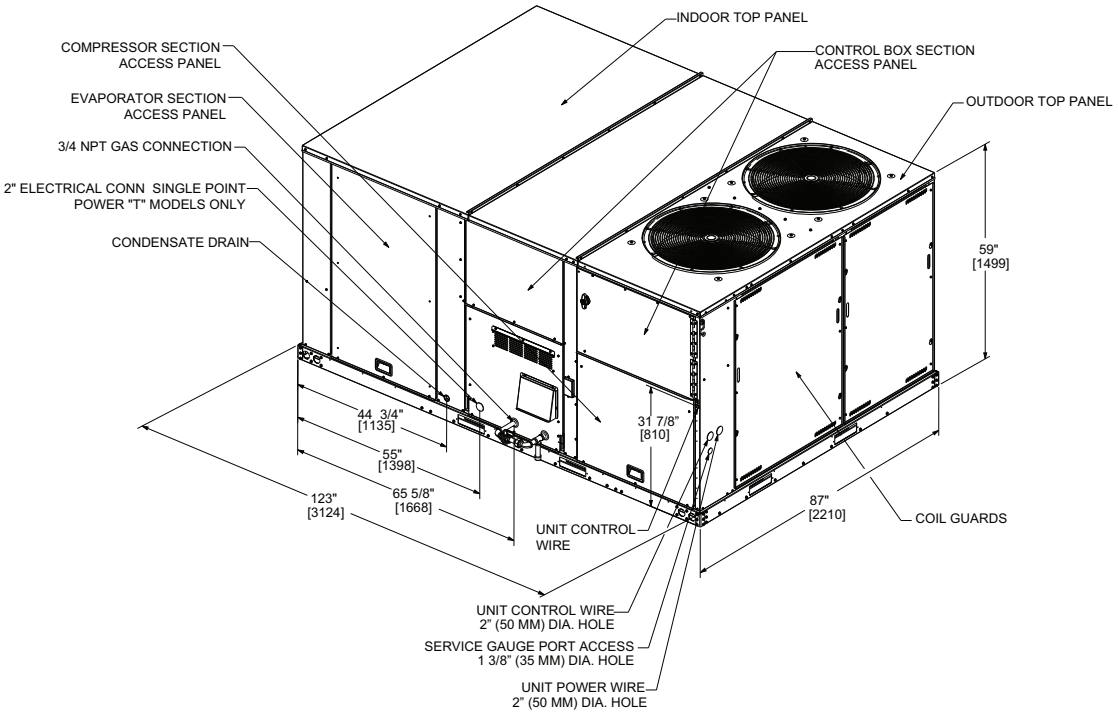

Figure 7. 20 to 25 tons high efficiency

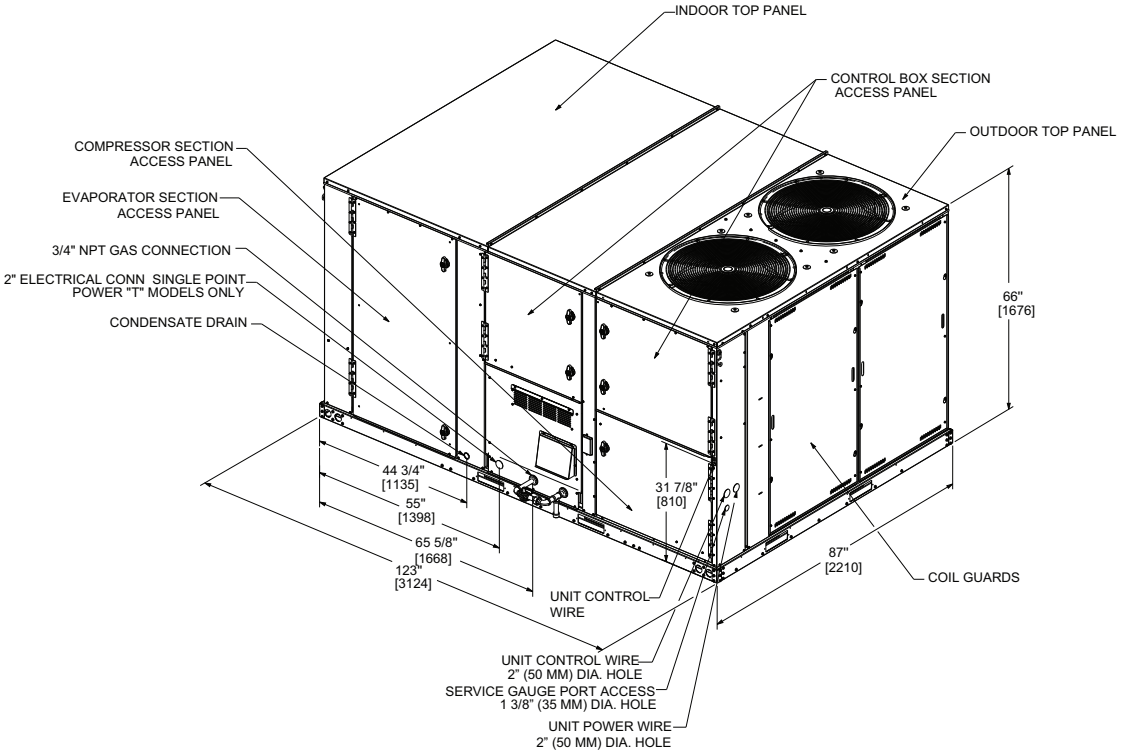

Figure 8. 12.5 to 25 tons high efficiency – downflow airflow supply/return, through-the-base utilities

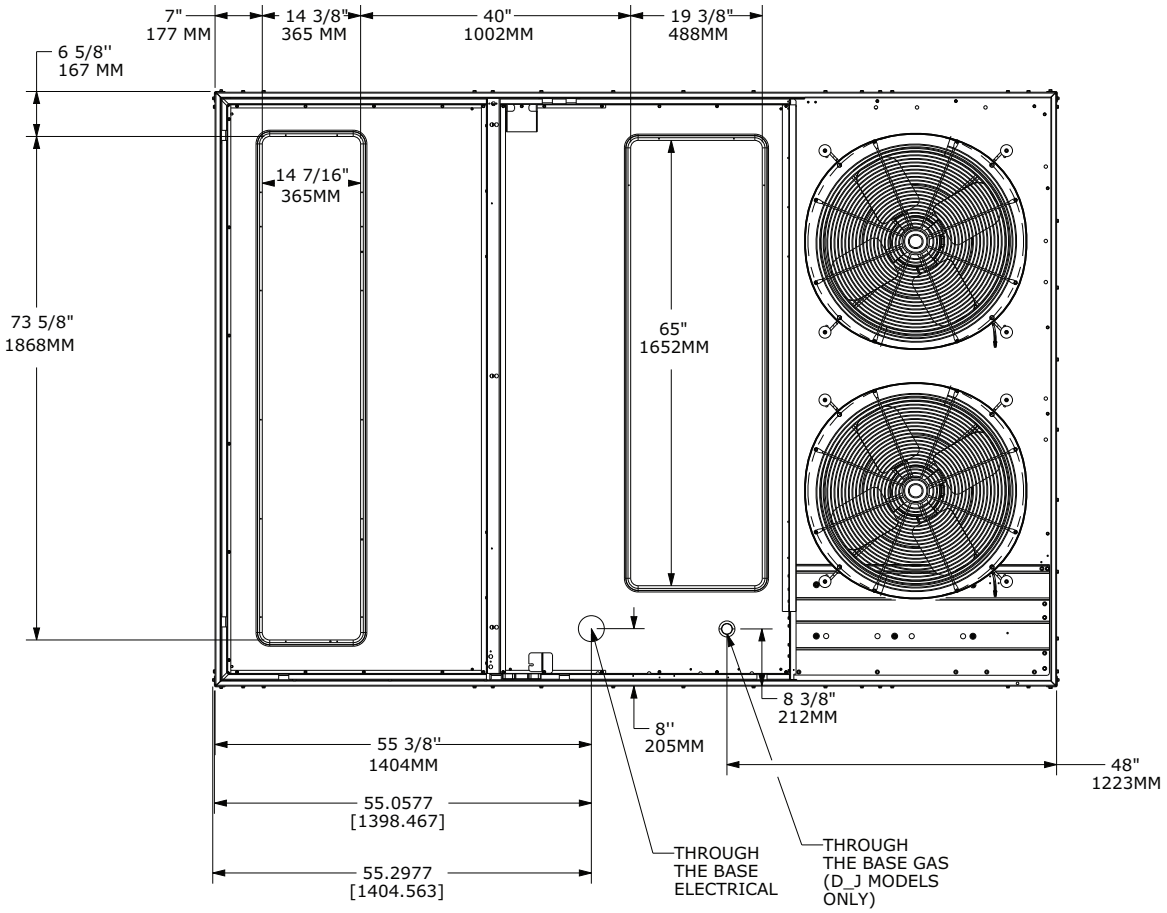

Figure 9. 12.5 to 25 tons high efficiency – horizontal airflow supply/return

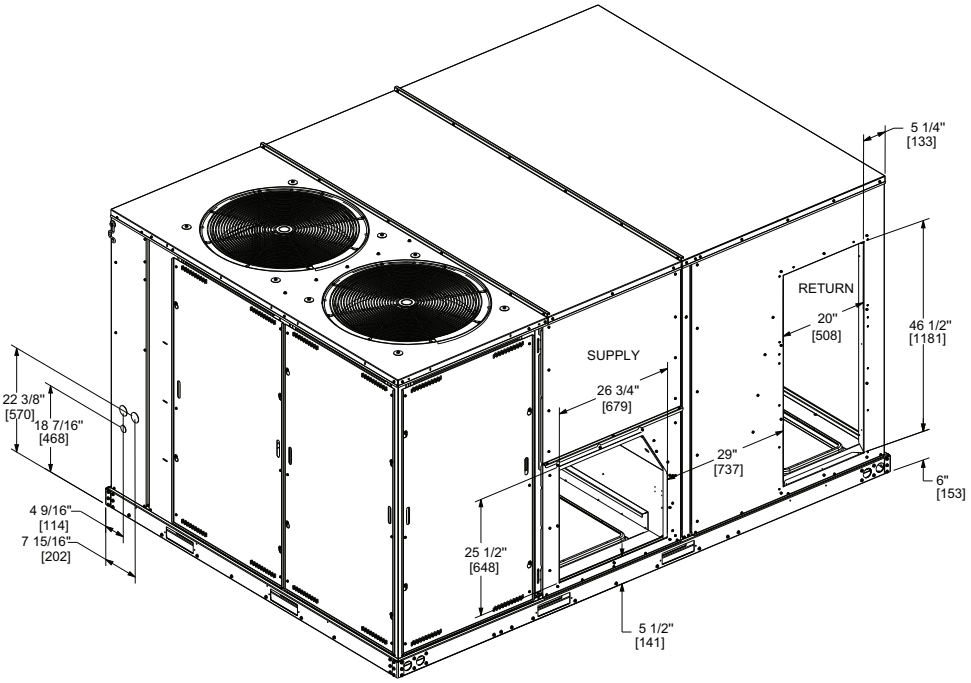

Figure 10. 12.5 to 25 tons high efficiency – power exhaust

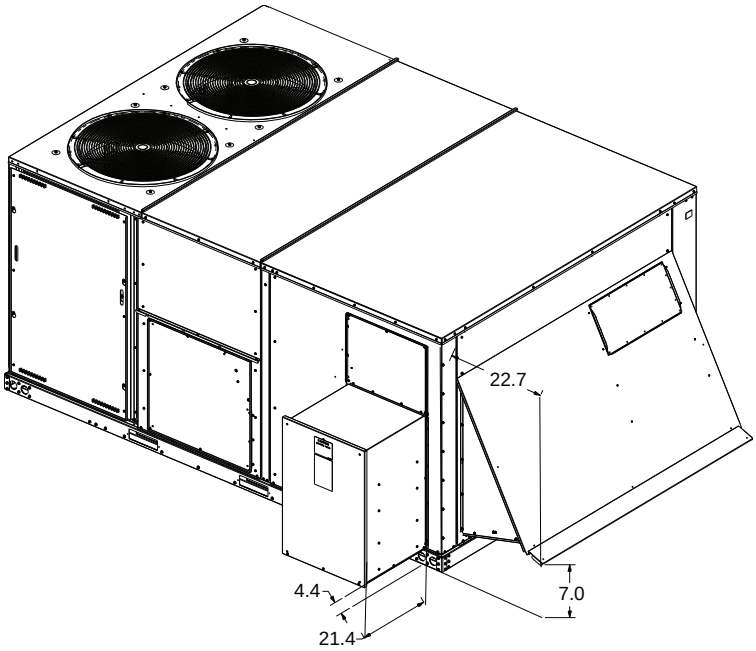

Figure 11. 12.5 to 25 tons high efficiency – unit clearance and roof opening

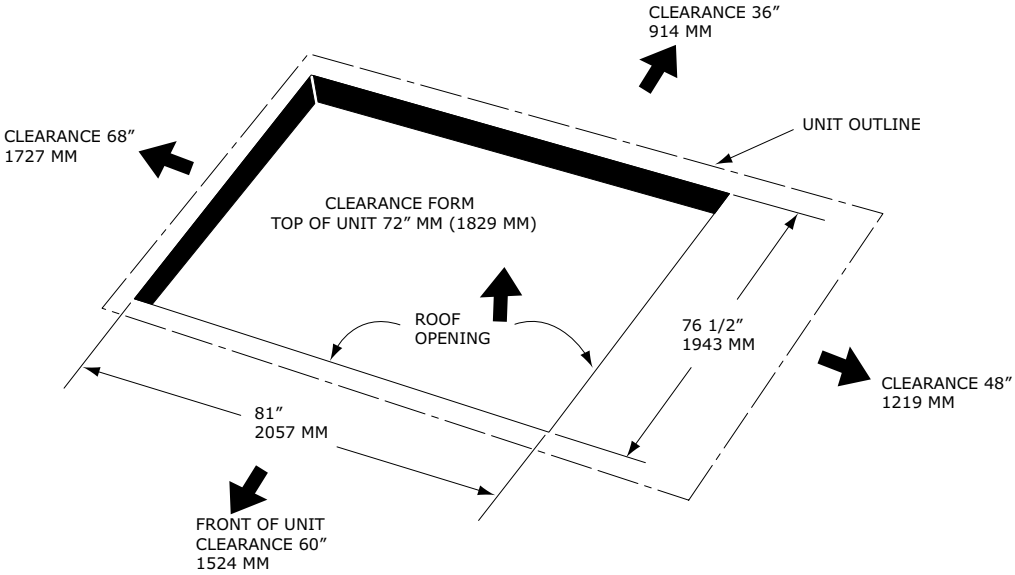

Figure 12. 12.5 to 25 tons high efficiency – roof curb

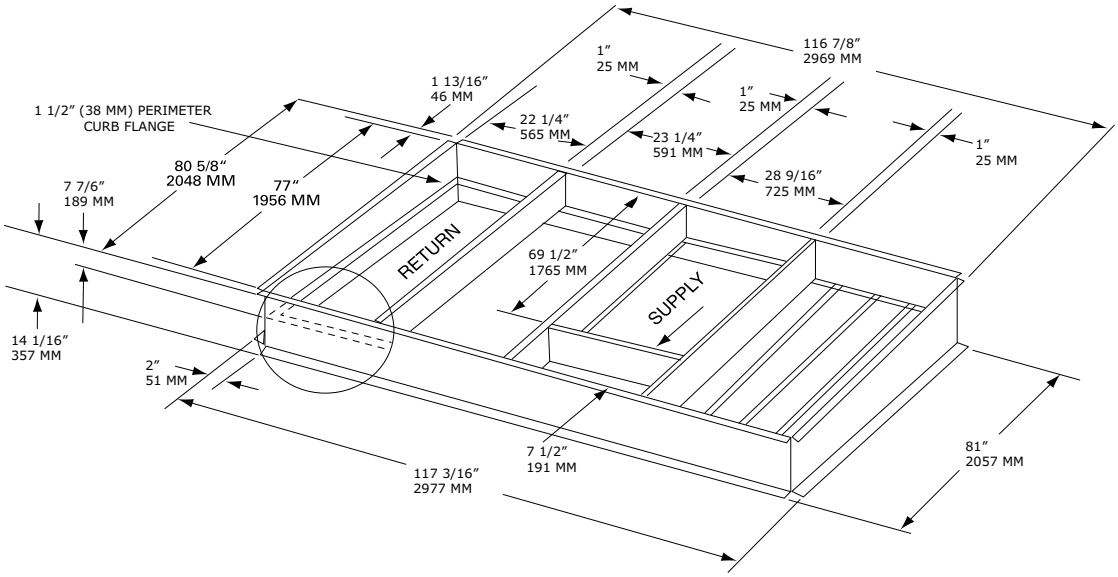

Figure 13. 12.5 to 25 ton high efficiency – swing diameter for hinged door(s) option

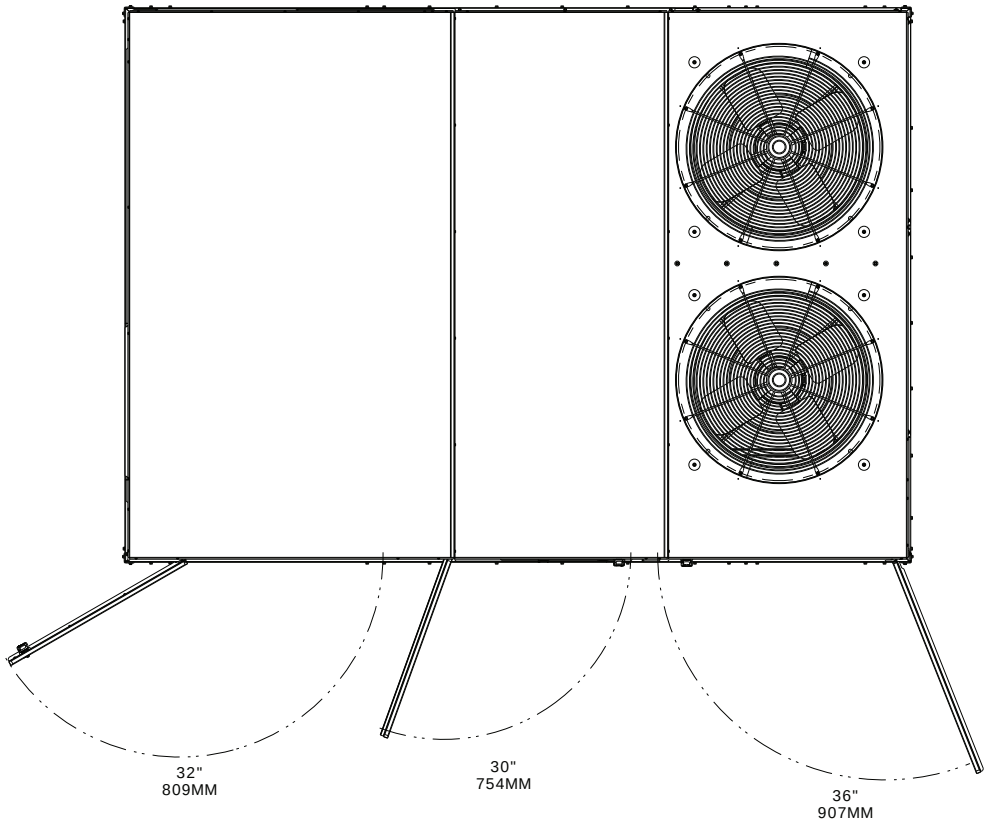

Weights

Table 54. Model weights, corner weights (lbs) and center of gravity dimensions (in.)

Tons	Unit Model No.	Model Weights[a]		Corner Weights[b]				Center of Gravity (in.)	
		Shipping	Net	A	B	C	D	Length	Width
12.5	WHJ150	2225	2005	688	487	344	486	51	36
15	WHJ180	2246	2026	695	492	348	491	51	36
20	WHJ240	2403	2183	680	550	426	527	55	38
25	WHJ300	2405	2185	680	550	427	528	55	38
12.5	DHJ150	2407	2187	750	532	375	530	51	36
15	DHJ180	2427	2207	757	536	379	535	51	36
20	DHJ240	2697	2477	771	624	484	598	55	38
25	DHJ300	2700	2480	772	625	484	599	55	38

(a) Weights are approximate. Weights do not include additional factory or field installed options/accessories. For option/accessory additional weights to be added to unit weight, reference the following table.

(b) Corner weights are given for information only.

Figure 14. Corner weights

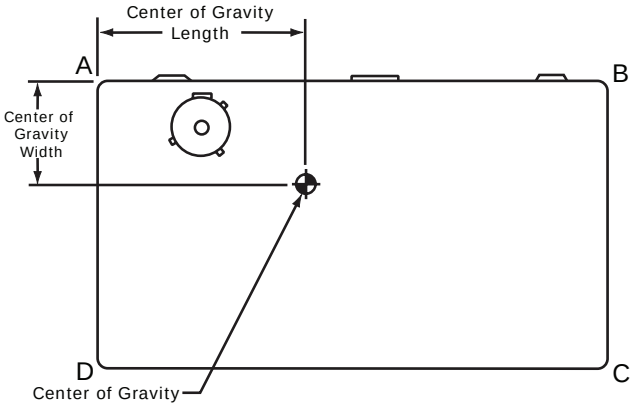

Table 55. Factory installed options (FIOPS)/accessory net weights (lb)

Accessory	W/D*J150-180	W/D*J240-300
	12.5, 15 Tons	20, 25 Tons
Barometric Relief	40	40
Economizer	91	91
Electric Heaters[a]	75	75
Hinged Doors	20	30
Low Leak Economizer - Downflow	150	150
Low Leak Economizer - Horizontal	180	180
Manual Outside Air Damper	15	15
Motorized Outside Air Damper	82	82
Oversized Motor	–	30
Powered Convenience Outlet	50	50
Powered Exhaust	110	110
Reheat Coil	100	100
Roof Curb	235	235
Smoke Detector, Supply	5	5

Table 55. Factory installed options (FIOPS)/accessory net weights (lb) (continued)

Accessory	W/D*J150-180	W/D*J240-300
	12.5, 15 Tons	20, 25 Tons
Smoke Detector, Return	5	5
Stainless Steel Heat Exchanger[b]	5	5
Through-the-Base Electrical	10	10
Through-the-Base Gas[b]	10	10
Unit Mounted Circuit Breaker	10	10
Unit Mounted Disconnect	10	10

Notes:

1. Weights for options not listed are less than 5 pounds.
2. Net weight should be added to unit weight when ordering factory-installed accessories.
3. Weights are approximate.

[a] Only applies to W*J models.

[b] Only applies to D*J models.

Mechanical Specifications

General

- Packaged rooftop units cooling, heating capacities, and efficiencies are AHRI Certified within scope of AHRI Standard 340-360 for 12.5 to 20 tons. The 25 ton units are tested in accordance with the standard.
- Convertible airflow.
- Symbio controls operating range between 40°F and 125°F in cooling mode standard from the factory. Factory or field-installed low ambient kit extended operating range down to 0°F.
- Factory assembled, internally wired, fully charged with R-410A, and 100 percent run tested to check cooling and heat pump operation, fan and blower rotation, and control sequence before leaving the factory.
- Colored and numbered wiring internal to the unit for simplified identification.
- Units cULus listed and labeled, classified in accordance for Central Cooling Air Conditioners.

Casing

- Zinc coated, heavy gauge, galvanized steel.
- Weather resistant pre-painted metal with galvanized substrate.
- Meets ASTM B117, 672 hour salt spray test.
- Removable single side maintenance access panels.
- Lifting handles in maintenance access panels (can be removed and reinstalled by removing fasteners while providing a water and air tight seal).
- Exposed vertical panels and top covers in the indoor air section insulated with a cleanable foil-faced, fire-retardant permanent, odorless glass fiber material.
- Base pan shall have no penetrations within the perimeter of the curb other than the raised 1 inch high downflow supply/return openings to provide an added water integrity precaution, if the condensate drain backs up.
- Base of the unit insulated with 1/8 inch, foil-faced, closed-cell insulation.
- Unit base provisions for forklift and/or crane lifting on three sides of unit.

Coils

Evaporator and Condenser

- Internally finned, 5/16-inch copper tubes mechanically bonded to a configured aluminum plate fin are standard.
- Coils are leak tested at the factory to ensure integrity.
- Evaporator coil and condenser coil are leak tested to 600 psig.
- Assembled unit is leak tested to 465 psig.
- Condenser coil is patent pending 1+1+1 hybrid coil, designed with slight gaps for cleaning ease.
- Composite, dual-sloped, removable condensate drain pan is standard.

Coil Guards

Provides condenser coil protection.

Compressors

- All units have direct-drive, hermetic, scroll type compressors with centrifugal type oil pumps.
- Suction gas-cooled motor with voltage utilization range of plus or minus 10 percent of unit nameplate voltage.
- Internal overloads standard with scroll compressors.
- Crankcase heaters are standard on all compressors.
- All units have dual compressors.
- Three stages of cooling available on 12.5 to 17.5 tons units and four stages of cooling available on 20 and 25 tons units.

Filters

- Standard throwaway filters
- Optional 2 inch MERV 8 and MERV 13 filters

Frostat™

- Utilized as a safety device.
- Opens to prevent freezing temperatures on evaporator coil.
- Temperature will need to rise to 50°F before closing.
- Utilized in low airflow or high outside air applications (cooling only).

Gas Heating Section

- The heating section shall have a progressive tubular heat exchanger with corrosion-resistant aluminized steel tubes and burners as standard on all models.
- Stainless steel heat exchanger with 409 stainless steel tubes and 439 stainless steel burners shall be optional.
- Induced draft combustion blower shall be used to pull the combustion products through the firing tubes.
- Heater shall use a direct spark ignition (DSI) system.
- On initial call for heat, the combustion blower shall purge the heat exchanger for 20 seconds before ignition.
- After three unsuccessful ignition attempts, entire heating system shall be locked out until manually reset at the thermostat/zone sensor.
- Units shall be suitable for use with natural gas or propane (field-installed kit).

Tubular Gas Heat Exchanger

- Compact cabinet features a tubular heat exchanger in low, medium and high heat capacities.
- Corrosion-resistant aluminized steel tubes and burners are standard on all models.
- Induced draft blower to pull the gas mixture through the burner tubes.
- Direct spark ignition and a flame sensor as a safety device to validate the flame.

Indoor Fan

- Direct drive plenum fan design – 12.5 to 25 tons units.
- Plenum fan design — backward-curved fan wheel along with an external rotor direct drive variable speed indoor motor.
- Supply fan speed adjustments can be made using the Symbio 700 or Mobile App.
- Motors are electronically protected.
- Variable speed direct drive motors are high efficiency – 12.5 to 25 tons.

Powered or Unpowered Convenience Outlet

- Powered GFCI, 120V/15A, 2 plug, convenience outlet or unpowered GFCI, 120V/20A, 2 plug, convenience outlet.
- When convenience outlet is powered, a service receptacle disconnect will be available.
- Convenience outlet is powered from the line side of the disconnect or circuit breaker, and therefore will not be affected by the position of the disconnect or circuit breaker.
- Available to order when through-the-base electrical with disconnect switch or circuit breaker option is ordered.

Stainless Steel Drain Pan

- Corrosion and oxidation resistance.
- Constructed of 304 stainless steel.

Stainless Steel Heat Exchanger

- Constructed of 409 stainless steel tubes and 439 stainless steel burners.
- Resistant to corrosion and oxidation and easy to clean.
- High strength to weight ratio allows for high ventilation rates with gas units.
- Compliment dehumidification option as a high outside air ventilation unit.
- 15 years stainless steel heat exchanger warranty is standard.

Through-the-Base Electrical with Circuit Breaker

- Thermal magnetic, molded case, HACR circuit breaker with provisions for through-the-base electrical connections.
- Circuit breaker installed within unit in water tight enclosure.
- Wiring provided from the switch to the unit high voltage terminal block.
- Circuit breaker will provide overcurrent protection, sized per NEC and cULus guidelines, and agency recognized by cULus.

Through-the-Base Electrical with Disconnect Switch

- 3-pole, molded case, disconnect switch with provisions for through-the-base electrical connections.
- Disconnect switch installed within unit in a water tight enclosure.
- Wiring provided from the switch to the unit high voltage terminal block.
- Switch cULus agency recognized.

Note: *Disconnect switch sized per NEC and cULus guidelines but will not be used in place of unit overcurrent protection*

Economizer (Standard)

- Available with or without barometric relief.
- Fully modulating 0-100 percent motor and dampers, minimum position setting, preset linkage, wiring harness with plug, spring return actuator and fixed dry bulb control.
- Barometric relief shall provide a pressure operated damper that shall be gravity closing.
- Barometric relief shall prohibit entrance of outside air during the equipment “off” cycle.
- Optional solid state or differential enthalpy control.
- Arrives in shipping position and shall be moved to the operating position by the installing contractor.

Manual Outside Air Damper

Rain hood and screen shall provide up to 50 percent outside air.

Motorized Outside Air Damper

- Once set, when indoor fan starts, outdoor air dampers shall open to set position.
- When indoor fan shuts down, damper shall close to the full closed position.

Powered Exhaust

- Available for 12.5 to 25 ton units.
- Shall provide exhaust of return air, when using an economizer.
- Maintain better building pressurization.

Roof Curb

- Designed to mate with the unit’s downflow supply and return.
- Provide support and a water tight installation when installed properly.

- Shall allow field-fabricated rectangular supply/return ductwork to be connected directly to the curb.
- Curb shall be shipped knocked down for field assembly.
- Shall include wood nailer strips.

Ventilation Override Operation

- Unit can be set to transition up to 3 different pre-programmed sequences for smoke purge, pressurization, and exhaust.
- Transition occurs when binary input on the Symbio is closed (shorted) (typically hard wired relay output from a smoke detector/ fire control panel.

  Note: *Requires Symbio™Customer Connection Module, FIASCCM001*.*

The AHRI Certified mark indicates Trane U.S. Inc. participation in the AHRI Certification program. For verification of individual certified products, go to ahridirectory.org.

Trane - by Trane Technologies (NYSE: TT), a global innovator - creates comfortable, energy efficient indoor environments for commercial and residential applications. For more information, please visit trane. com or tranetechnologies.com.

Trane has a policy of continuous product and product data improvements and reserves the right to change design and specifications without notice. We are committed to using environmentally conscious print practices.

PKGP-PRC021C-EN 15 Jul 2023
Supersedes PKGP-PRC021B-EN (March 2023)

©2023 Trane

Product Catalog

Packaged Rooftop Air Conditioners Precedent™ — Heat Pump

3 to 10 Tons — 60 Hz

December 2022 **PKGP-PRC013AA-EN**

Introduction

Packaged Heat Pumps

Trane® customers demand products that provide exceptional reliability, meet stringent performance requirements, and are competitively priced.

Precedent™ features cutting edge technologies: reliable compressors, Trane® engineered ReliaTel™ controls, computer-aided run testing, and Integrated Comfort™ Systems. So, whether you're the contractor, the engineer, or the owner you can be certain Precedent™ Products are built to meet your needs.

Through the years, Trane® has designed and developed the most complete line of Packaged Rooftop products available in the market today. Trane® was the first to introduce the Micro—microelectronic unit controls—and has continued to improve and revolutionize this design concept.

The ReliaTel™ control platform offers the same great features and functionality as the original Micro, with additional benefits for greater application flexibility.

With its sleek, compact cabinet, Precedent™ continues to provide the highest standards in quality and reliability, comfort, ease of service, and the performance of Trane® light commercial products.

Copyright

This document and the information in it are the property of Trane, and may not be used or reproduced in whole or in part without written permission. Trane reserves the right to revise this publication at any time, and to make changes to its content without obligation to notify any person of such revision or change.

Trademarks

All trademarks referenced in this document are the trademarks of their respective owners.

Revision History

- Added EER2/SEER2, Low/High temp COP2 and HSPF2 data and footnote in the General Data chapter.
- Updated the Roof Curb values in Factory installed options table in the Weights chapter.

Table of Contents

Introduction 2
- Packaged Heat Pumps 2

Features and Benefits 5
- Other Benefits 7
- Standard Features 7
- Factory Installed Options 10
- Factory or Field Installed Options 14
- Field Installed Options 15
- Other Benefits 16

Application Considerations 19
- Auxiliary Gas Heating Operation 19
- Barometric Relief 19
- Black Epoxy Coil 19
- Clearance Requirements 19
- Condensate Trap 19
- Low Ambient Cooling 20
- Optional Stainless Steel Heat Exchanger 20
- Unit Pitch 20

Selection Procedure 21
- Cooling Capacity 21
- Heating Capacity 22
- Air Delivery Selection 22

Model Number Descriptions 23

General Data 25

Gross Cooling Capacities 35

Evaporator Fan Performance 58

Fan Performance 100

Heating Performance Data 104

Controls 120
- ReliaTel™ 120
- Economizer Controls 120
- Differential Pressure Switches 122
- RA Remote Sensor 122
- Room Remote Sensor 122

Communication Interfaces 122
Electrical Data 124
Jobsite Connections 135
Dimensional Data 136
Weights 150
Mechanical Specifications 152
Standard 152
Factory Installed Options 153
Factory or Field Installed Options 156
Field Installed Options 158

Features and Benefits

Table 1. Precedent™ options — standard and optional

	Standard Features	Options[a]		
		Factory Installed	Factory or Field Installed	Field Installed
1-year Limited Parts Warranty	X			
2” MERV 8 Filters or 2” MERV 13 Filters with Filter Removal Tool		X		
5-year Limited Compressor Warranty	X			
5-year Limited Heat Exchanger Warranty	X			
Anti-Short Cycle Timer (Standard with ReliaTel™)	X			
Auxiliary Gas Heat (High Efficiency Models Only)		X		
Barometric Relief			X	
Black Epoxy Pre-Coated Coils		X		
CO_2 Sensor Only Kit / CO_2 Sensor and Wiring Kit				X
CO_2 Sensor (Wiring Only)		X		
Clogged Filter/Fan Failure Switch			X	
Colored and Numbered Wiring	X			
Condensate Overflow Switch		X		
Convertible Airflow	X			
Crankcase Heaters	X			
Direct Drive Variable Speed Motors	X			
Discharge Air Temperature Sensing Kit			X	
Easy Access Low Voltage Terminal Board (LTB)	X			
Economizer: Low Leak				X
Economizer: Standard and Low Leak			X	
Electric Heaters			X	
Fault Detection and Diagnostics (FDD); Meets CA Title 24 Requirements		X		
Filters are Standard on all Units	X			
Foil-Faced and Edge Captured Insulation	X			
Frostat™			X	
Hail Guards			X	
Heat Exchanger	X			
High Altitude Kit				X
High Pressure Control	X			
High Static Motor			X	
Hinged Access Doors		X		
IAQ Dual Sloped, Plastic, Removable, Reversible Drain Pan	X			
Liquid Line Refrigerant Drier	X			
Low Ambient Cooling to 0°F	X			
Low Pressure Control	X			
Manual Outside Air Damper				X
Motorized Outside Air Dampers				X
Multispeed Direct Drive Motors on Select Models	X			
Multispeed Indoor Fan System		X		
Operating Charge of R-410A	X			
Outside Air Measuring/Monitoring Control (Traq Dampers)				X
Patent-Pending Hybrid Condenser Coil for easy cleaning	X			

Table 1. Precedent™ options — standard and optional (continued)

	Standard Features	Options[a]		
		Factory Installed	Factory or Field Installed	Field Installed
Phase Loss Protection	X			
Phase Monitor	X			
Phase Reversal Protection	X			
Phase Balance Protection	X			
Plenum Fan on Select Models	X			
Powered Exhaust				X
Powered or Unpowered Convenience Outlet		X		
Provisions for Through-the-Base Condensate Drain Connections	X			
Quick Access Panels	X			
Quick Adapt Curbs				X
Quick Start Kit				X
Reference or Comparative Enthalpy			X	
Remote Potentiometer				X
Roof Curb				X
Single Point Power	X			
Single Side Service	X			
Single Zone Variable Air Volume (SZVAV)		X		
Stainless Steel Drain Pan		X		
Stainless Steel Heat Exchanger		X		
Standardized Components	X			
Supply, Return or Plenum Air Smoke Detector		X		
Thermal Expansion Valve	X			
Through-the-Base Electrical Access		X		
Through-the-Base Electrical with Circuit Breaker		X		
Through-the-Base Electrical with Disconnect Switch		X		
Touch Safe Control Box	X			
Ventilation Override Accessory				X

(a) Refer to model number description for option availability

Table 2. Precedent™ control options — standard and optional

	Standard Features	Options[a]		
		Factory Installed	Factory or Field Installed	Field Installed
BACnet® Communications Interface (BCI)			X	
Dual Thermistor Remote Zone Sensor				X
Human Interface		X		
LonTalk® Communications Interface (LCI)			X	
ReliaTel™ Microprocessor Controls	X			
Thermostat				X
Trane® Air-Fi® Wireless Communication Interface		X		
Trane® Communications Interface (TCI)			X	
Zone Sensor				X

(a) Refer to model number description for option availability.

Other Benefits

- Cabinet design ensures water integrity
- Ease of Service, Installation and Maintenance
- Mixed model build enables “fastest in the industry” ship cycle times
- Outstanding Airflow Distribution
- ReliaTel™ Controls

Standard Features

Anti-Short Cycle Timer

Provides a 3 minute minimum “ON” time and 3 minute “OFF” time for compressors to enhance compressor reliability by assuring proper oil return.

Colored And Numbered Wiring

Save time and money tracing wires and diagnosing the unit.

Compressors

Precedent™ contains the best compressor technology available to achieve the highest possible performance.

Multi-stage compressors provide optimal performance during light load conditions.

Condenser Coil

Precedent™ boasts a patent-pending 1+1+1 condenser coil, permanently gapped for easy cleaning.

Controls – ReliaTel™

ReliaTel™ microprocessor controls provide unit control for heating, cooling and ventilating utilizing input from sensors that measure indoor and outdoor temperature and other zone sensors. ReliaTel™ also provides outputs for building automation systems and expanded diagnostics. For a complete list of ReliaTel™ offerings, refer to the “Other Benefits” section within the Features and Benefits section of this catalog.

Convertible Units

The units ship in a downflow configuration. They can be easily converted to horizontal by simply moving two panels.

Units come complete with horizontal duct flanges so the contractor doesn't have to field fabricate them. These duct flanges are a time and cost saver.

Crankcase Heaters

These band heaters provide improved compressor reliability by warming the oil to prevent migration during off-cycles or low ambient conditions.

Direct Drive Variable Speed Motors

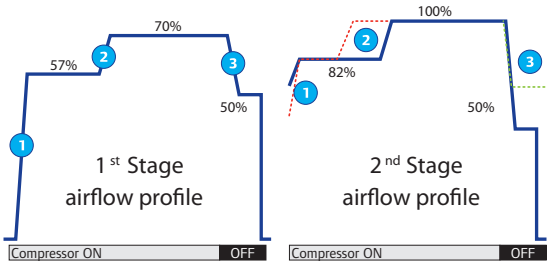

Direct drive motor shall be variable speed with constant airflow settings. Motor will be ECM (Electronically Commutated Motor) as standard pre-programmed with enhanced airflow capabilities.

Note: *Available on indoor motors for high efficiency 3 to 5 tons units only.*

Drain Pan

Every Precedent™ unit has a plastic, removable, dual-sloped drain pan that's easy to clean and reversible to allow installation of drain trap on either side of the unit.

Dual Fuel

In heating mode, the unit control operates the heat pump in 1st stage heating. If the call for heat is not satisfied, heat pump 2nd stage is activated. If ambient is below lockout set point, the controller will activate auxiliary gas heat 1st stage, and heat pump operation will be terminated. A continued call for heat will cause the controller to activate auxiliary gas heat 2nd stage.

The indoor fan will continue to run and will switch to 100% during transition from heat pump to gas heat. If the controller initiates gas heat as the first heat source during a call for heat in constant volume, the blower is delayed 45 seconds to allow heat up of the gas heat exchanger.

If continuous fan operation is available and selected from the thermostat, the controller automatically adjusts fan speed for heat pump and gas heat operation.

During defrost mode, the controller will activate auxiliary gas heat to maintain comfort.

Easy Access Low Voltage Terminal Board

Precedent's™ low voltage terminal board is external to the electrical control cabinet. It is extremely easy to locate and attach the thermostat wire and test operation of all unit functions. This is another cost and time saving installation feature.

Foil Faced and Edge Captured Insulation

All panels in the evaporator section of the unit have cleanable foil-faced insulation. All edges are either captured or sealed to ensure no insulation fibers get into the airstream.

Heat Exchanger

The compact cabinet features a progressive tubular heat exchanger in low, medium and high heat capacities. The heat exchanger is fabricated using stainless steel burners and corrosion-resistant aluminized steel tubes as standard on all models. It has an induced draft blower to pull the gas mixture through the burner tubes. The heater has a direct spark ignition system which doubles as a safety device to prove the flame.

Low Ambient Cooling

All Precedent™ microprocessor units have cooling capabilities down to 0°F as standard.

Low Voltage Connections

The wiring of the low voltage connections to the unit and the zone sensors is as simple as 1-1, 2-2, and 3-3. This simplified system makes it easy for the installer to wire.

Phase Monitoring Protection

Precedent™ units with 3-phase power are equipped with phase monitoring protection as standard. These devices protect motors and compressors against problems caused by phase loss, phase imbalance and phase reversal indication.

Plenum Fan

Select 6 to 10 tons models are equipped with a direct drive plenum fan design. Plenum fan design shall include a backward-curved fan wheel along with an external rotor direct drive variable speed indoor motor. All plenum fan designs will have a variable speed adjustment potentiometer located in the control box.

Quick-Access Panels

Remove two screws for access to the standard internal components and wiring.

Single Point Power

A single electrical connection powers the unit.

Standardized Components

Components are placed in the same location on all Precedent™ units. Due to standardized components throughout the Precedent™ line, contractors/owners can stock fewer parts.

Through-the-Base Condensate

Every unit includes provisions for through-the-base condensate drain connections. This allows the drain to be connected through the roof curb instead of a roof penetration.

Touch Safe Control Box

On 3 to 5 tons modes, low voltage and high voltage components are separated within the control box. High voltage components are located behind a door to provide an additional layer of safety.

Factory Installed Options

Black Epoxy Pre-Coated Coils

The pre-coated coils are an economical option for protection in mildly corrosive environments.

Circuit Breaker

This option is a factory installed thermal magnetic, molded case, HACR circuit breaker with provisions for through-the-base electrical connections.

Note: *Available on units equipped with through-the-base electrical.*

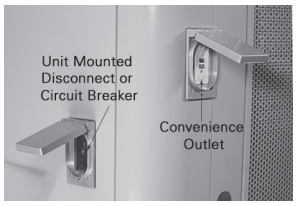

CO_2 Sensor Wiring

Factory-installed CO_2 sensor wiring saves time and ensures proper unit connections for the field installed CO_2 sensor kits.

Condensate Overflow Switch

A condensate overflow switch is available to shut the unit down in the event that the condensate drain line becomes clogged. This option protects the unit from water overflowing from the drain pan and entering the base of the unit.

Convenience Outlet

This option is a GFCI, 120V/15amp, 2 plug, convenience outlet, either powered or unpowered. This option can only be ordered when through-the-base electrical with either the disconnect switch or circuit breaker option is ordered.

Note: *Not available on 10 tons, 575V units.*

Disconnect Switch

Factory installed 3-pole, molded case, disconnect switch with provisions for through-the-base electrical connections are available.

Codes require a method of assured unit shutdown for servicing. Field-installed disconnects sometimes interfere with service access. Factory installation of unit disconnects reduces costs, assures proper mounting and provides the opportunity to upgrade to unit circuit breaker protection.

Note: *Available on units equipped with through-the-base electrical.*

Fault Detection and Diagnostics (FDD)

This offering meets the mandatory requirement of CA Title 24 of fully configurable diagnostics allowing fault history and reading fault codes at the unit. This option provides detection of the following faults: Air temperature sensor failure/fault and notification of acceptable economizer mode. The FDD system shall be certified by the Energy Commission as meeting the requirements.

High Efficiency Filtration

Precedent™ units offer a variety of high efficiency filtration options. MERV 8 and MERV 13 filters provide additional filtration beyond the capabilities of typical 2-inch throwaway filters. Also, when MERV 8 or MERV 13 filters are ordered, units come equipped with a filter removal tool.

High Static Motor

Oversized motor for applications where higher external static pressure capability is required. Direct drive constant torque motors on 3 to 5 tons standard efficiency. Direct drive constant CFM motors on 3 to 5 tons high efficiency. A belt driven high static kit is available on standard efficiency 6 to 8.5 tons units.

Hinged Access Doors

These doors permit easy access to the filter, fan/heat and compressor/control sections. They reduce the potential roof damage from screws or sharp access door corners.

Note: *A compressor isolation panel is available for 3 to 5 tons units to ease commissioning and servicing of units.*

Human Interface - 5 Inch Color Touchscreen

The 5 inch Color Touchscreen Human Interface provides an intuitive user interface to the rooftop unit that speeds up unit commissioning, shortens unit troubleshooting times, and enhances preventative maintenance measures. The human interface includes several features such as:

- Data trending capabilities by means of time series graphs
- Historical alarm messages
- Real-time sensor measurements
- On board system setpoints
- USB port that enables the downloading of component runtime information as well as trended historical sensor data
- Customized reports

Note: *Refer to RT-SVX49*-EN for additional information.*

Multi-Speed Indoor Fan System

Multi-speed indoor fan system is designed for use in applications for meeting the minimum requirement of CA Title 24.

This system incorporates a multi-speed fan control to change the speed of the fan to 66% of full airflow based off of compressor stages.

Multiple-Zone VAV Control

A multiple-zone VAV (MZVAV) system consists of a packaged rooftop unit that serves several individually controlled zones. Each zone is equipped with a VAV terminal unit that varies the quantity of air delivered to maintain the desired temperature in that zone. The rooftop unit controller varies the speed of the indoor fan to maintain the static pressure in the supply ductwork at a setpoint, ensuring that all zones receive the necessary quantity of air. In addition, cooling capacity is cycled to maintain the supply air temperature at the desired setpoint.

For decades, Trane has been an industry leader in rooftop VAV systems. Now multiple-zone VAV control is available in high efficiency packaged heat pumps.

Single Zone VAV (SZVAV)

Single zone variable air volume is designed for use in single zone applications like gymnasiums, auditoriums, manufacturing facilities, retail box stores, and any large open spaces, where there is a lot of diversity in the load profile. SZVAV is an ideal replacement to “yesterday’s” constant volume (CV) systems, by reducing operating costs while improving occupant comfort. SZVAV systems combine Trane® application, control and system integration knowledge to exactly match fan speed with cooling and heating loads, regardless of the operating condition. Trane® algorithms meet/exceed ASHRAE 90.1- 2010, SZVAV energy-saving recommendations, and those of CA Title 24. The result is an optimized balance between zone temperature control and system energy savings. Depending on your specific application, energy savings can be as much as 20+%.

Note: *Building system modeling in energy simulation software like TRACE is recommended to evaluate performance improvements for your application.*

Single zone variable air volume is fully integrated into the ReliaTel™ control system and is available today. It provides the simplest and fastest commissioning in the industry through proven factory-installed, wired, and tested system controllers. All control modules, logic and sensors are factory installed, and tested to assure the highest quality and most reliable system available. This means no special programming of algorithms, or hunting at the jobsite for sensors, boards, etc. that need to be installed in the field. SZVAV is a quick and simple solution for many applications and is available from your most trusted rooftop VAV system solution provider - Trane®.

Stainless Steel Drain Pan

For excellent corrosion and oxidation resistance, the optional stainless steel drain pan provides a cleanable surface that complement other IAQ solutions such as high efficiency filtration (MERV 8 or 13) and demand control ventilation (CO_2).

Stainless Steel Heat Exchanger

The optional stainless steel heat exchanger is constructed of 409 stainless steel. It is resistant to corrosion and oxidation and easy to clean. The high strength to weight ratio allows for high ventilation rates with gas units. It is an excellent option to compliment the dehumidification option as a high outside air ventilation unit. With this option, a 10-year stainless steel heat exchanger warranty is standard.

Supply, Return, and Plenum Air Smoke Detector

With this option installed, if smoke is detected, all unit operation will be shut down. Reset will be manual at the unit. In order for the supply air smoke detector or return air smoke detector to properly sense smoke in the supply air stream or the return air stream, the air velocity entering the smoke detector unit must be between 500 - 4000 feet per minute. Equipment covered in this manual will develop an airflow velocity that falls within these limits over the entire airflow range specified in the evaporator fan performance table. Supply and/or return smoke detectors may not be used with the plenum smoke detector.

Note: *Plenum smoke detectors have no auxiliary contacts for external connections.*

Figure 1. Supply/Return air smoke detector

Figure 2. Plenum air smoke detector

Through-the-Base Electrical Utility Access

An electrical service entrance shall be provided allowing electrical access for both control and main power connections inside the curb and through-the-base of the unit. Option will allow for field installation of liquid-tight conduit and an external field installed disconnect switch.

Factory provided through-the-base openings simplify wiring and piping. Because these utility openings frequently minimize the number of roof penetrations, the integrity of roofing materials is enhanced.

Through-the-Base Gas Access

Factory provided through-the-base openings simplify wiring and piping. Because these utility openings frequently minimize the number of roof penetrations, the integrity of roofing materials is enhanced.

Factory or Field Installed Options

Barometric Relief

Designed to be used on downflow units, barometric relief is an unpowered means of relieving excess building pressure.

Clogged Filter/Fan Failure Switch

A dedicated differential pressure switch is available to achieve active fan failure indication and/or clogged filter indication.

These sensors allow a zone sensor service light to indicate a dirty filter or a fan that's not working. The field installation charges for these valuable feedback devices often eliminate them from consideration. Factory installation can make such features a good investment.

Discharge Air Temperature Sensing Kit

Provides true discharge air temperature sensing in heating models. The kit is functional only with the ReliaTel™ options module.

Economizer (Standard)

This accessory shall be available with or without barometric relief. The assembly includes fully modulating 0-100 percent motor and dampers, minimum position setting, preset linkage, wiring harness with plug, spring return actuator and fixed dry bulb control. The barometric relief shall provide a pressure operated damper that shall be gravity closing and shall prohibit entrance of outside air during the equipment "off" cycle. Optional solid state or differential enthalpy control shall be available for either factory or field installation. The economizer arrives in the shipping position and shall be moved to the operating position by the installing contractor.

Electric Heaters

Electric heat modules are available within the basic unit. If ordering the through-the-base electrical option with an electrical heater, the heater must be factory installed.

Fresh Air Options – Dampers and Economizer

0 to 25% manual or 0 to 50% motorized outside air hoods are available.

Economizers are equipped with either dry bulb or reference or comparative enthalpy sensing. These economizers provide free cooling as the outdoor temperature and/or humidity decreases. Correctly installed, they offer a valuable energy savings. Factory-installed economizers save time and ensure proper installation.

Due to varying supply fan speed 0 to 50% motorized damper is not available with multi-speed or SZVAV applications.

The economizers come with three control options — dry bulb is standard, enthalpy and differential enthalpy are optional.

Frostat™

This capillary bulb embedded in the face of the evaporator coil monitors coil temperature to prevent evaporator icing and protect the compressor. Recommended for applications with low leaving air temperatures, low airflow and or high latent load applications.

Hail Guards

Hail protection quality coil guards protects the condenser coil from vandalism and/or hail damage.

Low Leak Economizer

This accessory meets low leak requirements for ASHRAE 90.1, IECC, and CA Title 24 standards (4 cfm/ft^2@1" wg exterior air/return air). This option allows 100% outdoor air supply from 0 to 100% modulating dampers and is standard with barometric relief. It can be paired with powered exhaust for additional building pressure relief. This option can be paired with or without Fault Detection and Diagnostics (FDD) to meet current mandatory CA Title 24 requirements.

Note: *Available on downflow units only.*

Reference or Comparative Enthalpy

Measures and communicates humidity while maximizing comfort control.

Field Installed Options

CO_2 Sensing Kits

Two field installed kits are offered: CO_2 sensor and wiring or CO_2 sensor only. The CO_2 sensor only kit should be ordered with factory installed CO_2 sensor wiring. Factory installed CO_2 sensor wiring saves set-up time and ensures proper unit connections for the CO_2 sensor.

The CO_2 sensor has the ability to monitor space occupancy levels within the building by measuring the parts per million of CO_2 (Carbon Dioxide) in the air. As the CO_2 levels increase, the outside air damper modulates to meet the CO_2 space ventilation requirements.

High Altitude Kit

While recommended for units applied above 2000 feet, domestic contractors should consult with local authority on best practice. High altitude kits contain gas orifices that derate the gas input rate (Btu/hr) by 10%.

Low Leak Economizer - Field Installed

This accessory meets low leak requirements for ASHRAE 90.1, IECC, and CA Title 24 standards (4 cfm/ft^2@1" wg exterior air/return air). This option allows 100% outdoor air supply from 0-100% modulating dampers and is standard with barometric relief. It can be paired with powered exhaust for additional building pressure relief.

Note: *Available on downflow units only.*

Outside Air Measuring/Monitoring Control (Traq Dampers)

Quantity of fresh air entering the unit will be measured and monitored via Trane UC400 controller and series of pressure sensing rings mounted at the outside air intake.

Quick Adapt Curbs

Enables easy conversion of existing Voyager™ 3 to 10 tons units to Precedent™ units on replacement jobs.

Roof Curbs

Available for downflow units. Only three roof curbs for the entire line simplifies curb selection.

Remote Potentiometer

When properly installed in the economizer control circuitry, this accessory provides a remote variable resistance to enable the operator to adjust the minimum damper position.

Ventilation Override Accessory

With the ventilation override accessory installed, the unit can be set to transition to up to 3 different pre-programmed sequences for smoke purge, pressurization, and exhaust. The transition occurs when a binary input on the RTOM is closed (shorted). This would typically be a hard wired relay output from a smoke detector or fire control panel. The ventilation override kit is available as a field installed accessory.

Other Benefits

Airflow Distribution

Airflow is outstanding. Precedent™ can replace an older machine with old ductwork and, in many cases, improve the comfort through better air distribution.

Cabinet Integrity

For added water integrity, Precedent™ has a raised 1 1/8-inch lip around the supply and return of the downflow units to prevent water from blowing into the ductwork.

The compact cabinet with rounded corners takes up less room. The beveled and ribbed top is aesthetically pleasing and designed to prevent water from pooling.

Easy to Install, Service and Maintain

Because today's owners are very cost-conscious when it comes to service and maintenance, the Precedent™ unit was designed with direct input from service contractors. This valuable information helped to design a product that would get the service person off the job quicker and save the owner money. Precedent™ offers outstanding standard features enhanced by a variety of factory and field installed options, multiple control options, rigorously tested proven designs and superior product and technical support.

Flexibility

Precedent™ offers ultimate flexibility. Units are built to order in our standard "shortest in the industry" ship cycle time.

ReliaTel™ Controls

Figure 3. ReliaTel board

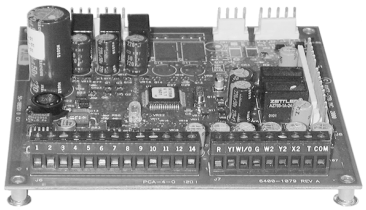

ReliaTel controls provide unit control for heating, cooling, and ventilating, utilizing input from sensors that measure outdoor and indoor temperature. ReliaTel also provides outputs for building automation systems and expanded diagnostics. Quality and reliability are enhanced through ReliaTel control and logic:

- Prevents the unit from short cycling, considerably improving compressor life.
- Ensures the compressor will run for a specific amount of time which allows oil to return for better lubrication, enhancing the reliability of the compressor.
- Reduces the number of components required to operate the unit, reducing possibilities for component failure.

ReliaTel Makes Installing and Servicing Easy

ReliaTel eliminates the need for field-installed, anti-short cycle timer and time delay relays. The wiring of the low voltage connections to the unit and the zone sensors is as easy as 1-1, 2-2, and 3-3. This simplified system makes wiring easier for the installer.

ReliaTel Makes Testing Easy

ReliaTel requires no special tools to run the unit through its paces. Simply place a jumper between Test 1 and Test 2 terminals on the Low Voltage Terminal Board and the unit will walk through its operational steps automatically. The unit automatically returns control to the zone sensor after stepping through the test mode a single time, even if the jumper is left on the unit. As long as the unit has power and the “system on” LED is lit, ReliaTel is operational. The light indicates that the controls are functioning properly. ReliaTel features expanded diagnostic capabilities when utilized with Trane Integrated Comfort™ Systems. Some zone sensor options have central control panel lights which indicate the mode the unit is in and possible diagnostic information (dirty filters for example).

ReliaTel Has Other Benefits

- The ReliaTel built-in anti-shortcycle timer, time delay relay and minimum “on” time control functions are factory tested to assure proper operation.
- ReliaTel softens electrical “spikes” by staging on fans, compressors and heaters.
- Intelligent Fallback is a benefit to the building occupant. If a component goes astray, the unit will continue to operate at predetermined temperature setpoint.
- Intelligent Anticipation is a standard feature. It functions continuously as ReliaTel and zone sensor(s) work together in harmony to provide much tighter comfort control than conventional electromechanical thermostats.
- The ReliaTel design is standardized across the board, ensuring a lower cost to owners.

Rigorous Testing

All of Precedent's™ designs were rigorously rain tested at the factory to ensure water integrity.

Actual shipping tests were performed to determine packaging requirements. Units were test shipped around the country to determine the best packaging. Factory shake and drop tests were used as part of the package design process to help assure that the unit arrives at the job site in top condition.

Rigging tests include lifting a unit into the air and letting it drop one foot, assuring that the lifting lugs and rails hold up under stress.

We perform a 100% coil leak test at the factory. The evaporator and condenser coils are leak tested at 600 psig. The assembled unit is leak tested to 465 psig.

All parts are inspected at the point of final assembly. Sub-standard parts are identified and rejected immediately.

Every unit receives a 100% unit run test before leaving the production line to make sure it meets rigorous requirements.

Application Considerations

Application of this product should be within the cataloged airflow and cooling considerations.

Auxiliary Gas Heating Operation

The heat exchanger is manufactured with aluminized steel. To prevent condensation within the heat exchanger, do not exceed 50%outside air or a minimum mixed air temperature of 40°F.

Barometric Relief

This product line offers an optional barometric relief damper for use in conjunction with economizer option. This accessory consists of gravity dampers which open with increased pressure. As the building air pressure increases, the pressure in the unit return air section also increases, opening the dampers and relieving the conditioned space.

Note: *The effectiveness of barometric relief damper during economizing operation is limited, depending on the pressure drop of the return-air path. For some applications, powered exhaust may be better suited for preventing over-pressurization when economizing.*

Black Epoxy Coil

The coils are manufactured with a thermoset, vinyl coating that is bonded to the aluminum fin stock prior to the fin stamping process. These coils are an economical option for protection in mildly corrosive environments.

Note: *Not to be used where seacoast applications exist.*

Clearance Requirements

The recommended clearances identified with unit dimensions should be maintained to assure adequate service maximum capacity and peak operating efficiency. Actual clearances which appear inadequate should be reviewed with the local Trane® sales personnel.

Model Number	Clearance required from duct to combustible surfaces (inches)
WSC036H	0
WSC048H	0
WSC060H	0
WSC092H	1
WSC102H	1
WSC120H	1
D/WHC036H	0
D/WHC048H	0
D/WHC060H	0
D/WHC074H	1
D/WHC092H	1
D/WHC102H	1
D/WHC120H	1

Condensate Trap

The evaporator is a draw-thru configuration. A trap must be field provided prior to start-up on the cooling cycle.

Low Ambient Cooling

The Precedent™ line features, with ReliaTel™ microprocessor controls, low ambient cooling down to 0°F. The following features or options need to be included/considered when low ambient applications are required: continuous fan operation, crankcase heaters, thermal expansion valves, frostat.

Contact a local Trane® representative for more assistance with low ambient cooling applications.

Optional Stainless Steel Heat Exchanger

The optional stainless steel heat exchanger is manufactured with 409 stainless steel. To prevent corrosion and prolong heat exchanger reliability, the minimum mixed air temperature allowed across the heat exchanger is 20°F.

The stainless steel heat exchanger option is an excellent option that compliments the dehumidification package. Whenever high outside air or outside applications exist, these options should be utilized.

Unit Pitch

The unit has a reversible sloped condensate drain pans. The unit must be installed level. Any unit slope must be toward the side of unit where condensate drain is connected.

Selection Procedure

Cooling Capacity

1. Calculate the building's total and sensible cooling loads at design conditions. Use the Trane® calculation methods or any other standard accepted method.

   Factors used in unit selection:

   - Total Cooling Load: 58 MBh
   - Sensible Cooling Load: 37 MBh
   - Airflow: 2000 cfm
   - Electrical Characteristics: 460/60/3
   - Summer Design Conditions: Entering
   - Evaporator Coil: 80 DB, 67 WB Outdoor Ambient: 95
   - External Static Pressure: 0.47 in. wg
   - Downflow Configuration
   - Economizer

2. As a starting point, a rough determination must be made of the size of the unit. The final selection will be made after examining the performance at the given conditions. Divide the total cooling load by nominal BTUH per ton (12 MBh per ton); then round up to the nearest unit size.

   58 MBh / 12 MBh = approx. 5 tons

3. Table 12, p. 37 shows that a WSC060H4 has a **gross** cooling capacity of 61.0 MBh and 48.8 MBh sensible capacity at 2000 cfm and 95 DB outdoor ambient with 80 DB, 67 WB air entering the evaporator.

   To Find Capacity at Intermediate Conditions not in the table

   When the design conditions are between two numbers that are in the capacity table, interpolation is required to approximate the capacity.

   Note: *Extrapolation outside of the table conditions is not recommended.*

4. In order to select the correct unit which meets the building's requirements, the fan motor heat must be deducted from the gross cooling capacity. The amount of heat that the fan motor generates is dependent on the effort by the motor - cfm and static pressure. To determine the total unit static pressure:

External Static Duct System	0.52 wg
Economizer from Table 83, p. 102 (100% Outside Air)	0.11 wg
Electric Heater Size 9 kW from Table 83, p. 102	0.02 wg
Total Static Pressure	0.65 wg

Note: Refer "Heating Capacity," p. 22 section on this page for determination of heater size.

With 2000 cfm and 0.65 wg. Table 35, p. 59 shows 0.44 bhp for this unit. Note below the table gives a formula to calculate Fan Motor Heat,

2.87 x bhp + 0.15 = MBh
2.87 x 0.44 + 0.15 = 1.41 MBh

Now subtract the fan motor heat from the gross cooling capacity of the unit:

Net Total Cooling Capacity
= 61.0 MBh - 1.41 = 59.59 MBh

Net Sensible Cooling Capacity
= 48.8 MBh - 1.41 = 47.39 MBh

5. Compare results to original load requirements. If the performance will not meet the required total or sensible cooling load, try a selection at the next higher size unit.

Heating Capacity

1. Calculate the building heating load using the Trane® calculation form or other standard accepted method.
2. Size the equipment using Table 86, p. 106 to match the heating loads at design conditions.

   Total heating load of 53 MBh

   Outdoor Ambient (Winter): 17 DB

   Indoor Return Temperature: 60 DB

   Airflow: 2000 cfm

   Use the integrated portion of Table 86, p. 106 for WSC060 to determine capacity at winter design conditions. The mechanical heating portion of the heat pump will provide 36.2 MBh.
3. Because 36.2 is less than the building's required heating capacity at winter design conditions, a supplementary heater must be selected.

   53 MBh - 36.2 MBh = 16.8 MBh

   The auxiliary electric heat capacities are listed in Table 104, p. 117. From the table, a 6 kW heater will deliver 20.48 MBh at 480 volts. In order to determine capacity at 460 volts, the heater voltage correction factor from Table 106, p. 118 must be used. Therefore, 20.48 MBh x .918 (voltage correction factor) = 18.8 MBh. A 6 kW heater should be selected.

Air Delivery Selection

External static pressure drop through the air distribution system has been calculated to be 0.65 inches of water. Enter Table 35, p. 59 for a WSC060H4 at 2000 cfm and 0.65 static pressure. The belt drive motor will give the desired airflow at a rated bhp of 0.44 and 766 rpm.

Model Number Descriptions

Digit 1 - Unit Type

W = Packaged Heat Pump[2]
D = Dual Fuel Heat Pump[2]

Digit 2 - Efficiency

S = Standard Efficiency
H = High Efficiency

Digit 3 - Airflow

C = Convertible

Digit 4,5,6 - Nominal Gross Cooling Capacity (MBh)

036 = 3 Ton
048 = 4 Ton
060 = 5 Ton
074 = 6 Ton
092 = 7.5 Ton
102 = 8.5 Ton
120 = 10 Ton

Digit 7 - Major Design Sequence

Digit 8 - Voltage Selection

3 = 208-230/60/3
4 = 460/60/3
W = 575/60/3

Digit 9 - Unit Controls

R = ReliaTel™ Microprocessor

Digit 10 - Heating Capacity

Note: *Applicable to Digit 1,W models only.*

0 = No Electric Heat
B = 6 kW
C = 9 kW
E = 12 kW
G = 18 kW
J = 23 kW
K = 27 kW
N = 36 kW
P = 54 kW

Note: *Applicable to Digit 1,D models only*

L = Low Heat
M = Medium Heat
H = High Heat
X = Low Heat, Stainless Steel Heat Exchanger
Y = Medium Heat, Stainless Steel Heat Exchanger
Z = High Heat, Stainless Steel Heat Exchanger

Digit 11 - Minor Design Sequence

Digit 12,13 - Service Sequence

** Factory Assigned

Digit 14 - Fresh Air Selection

0 = No Fresh Air
A = Manual Outside Air Damper 0-50%[1]
B = Motorized Outside Air Damper 0-50%[10]
C = Economizer, Dry Bulb 0-100% without Barometric Relief[4]
D = Economizer, Dry Bulb 0-100% with Barometric Relief[4]
E = Economizer, Reference Enthalpy 0-100% without Barometric Relief[4]
F = Economizer, Reference Enthalpy 0-100% with Barometric Relief[4]
G = Economizer, Comparative Enthalpy 0-100% without Barometric Relief[4]
H = Economizer, Comparative Enthalpy 0-100% with Barometric Relief[4]
K = Low Leak Economizer with Barometric Relief
M = Low Leak Economizer with Reference Enthalpy with Barometric Relief
P = Low Leak Economizer with Comparative Enthalpy with Barometric Relief

Digit 15 - Supply Fan/Drive Type/ Motor

0 = Standard Drive[3]
1 = Oversized Motor[3]
2 = Optional Belt Drive Motor
6 = Single Zone Variable Air Volume (SZVAV)[14]
7 = Multi-Speed Indoor Fan[12]
8 = Single Zone Variable Air Volume (SZVAV) w/Oversized Motor[14]
E = Multi-Zone Variable Air Volume (MZVAV)[14]
F = Multi-Zone Variable Air Volume (MZVAV) w/Oversized Motor[14]

Digit 16 - Hinged Service Access/ Filters

0 = Standard Panels/Standard Filters
A = Hinged Access Panels/Standard Filters
B = Standard Panels/2” MERV 8 Filters
C = Hinged Access Panels/2” MERV 8 Filters
D = Standard Panels/2” MERV 13 Filters
E = Hinged Access Panels/2” MERV 13 Filters

Digit 17 - Condenser Coil Protection

0 = Standard Coil
1 = Standard Coil with Hail Guard
2 = Black Epoxy Pre-Coated Condenser Coil
3 = Black Epoxy Pre-Coated Condenser Coil with Hail Guard

Digit 18 - Through-the-Base Provisions

0 = No Through-the-Base Provisions
A = Through-the-Base Electric[5]
B = Through-the-Base Gas Piping[17]
C = Through-the-Base Electric and Gas Piping[17]

Digit 19 - Disconnect/Circuit Breaker (three-phase only)

0 = No Disconnect/No Circuit Breaker
1 = Unit Mounted Non-Fused Disconnect[5]
2 = Unit Mounted Circuit Breaker[5]

Digit 20 - Convenience Outlet

0 = No Convenience Outlet
A = Unpowered Convenience Outlet
B = Powered Convenience Outlet (three-phase only)[6]

Digit 21 - Communications Options

0 = No Communications Interface
1 = Trane® Communications Interface
2 = LonTalk® Communications Interface
6 = BACnet® Communications Interface
7 = Air-Fi® Wireless Communications[15]

Digit 22 - Refrigeration System Option

0 = Standard Refrigeration System[7]

Digit 23 - Refrigeration Controls

0 = No Refrigeration Control[2]
1 = Frostat™[11]
2 = Crankcase Heater[16]
3 = Frostat and Crankcase Heater[11,16]

Digit 24 - Smoke Detector

0 = No Smoke Detector
A = Return Air Smoke Detector[8]
B = Supply Air Smoke Detector
C = Supply and Return Air Smoke Detectors[8]
D = Plenum Smoke Detector

Digit 25 - System Monitoring Controls

0 = No Monitoring Control
1 = Clogged Filter Switch
2 = Fan Failure Switch
3 = Discharge Air Sensing Tube
4 = Clogged Filter Switch and Fan Fail Switch
5 = Clogged Filter Switch and Discharge Air Sensing Tube
6 = Fan Fail Switch and Discharge AirSensing Tube
7 = Clogged Filter and Fan Fail Switches and Discharge Air Sensing Tube
A = Condensate Drain Pan Overflow Switch
B = Clogged Filter Switch and Condensate Drain Pan Overflow Switch
C = Fan Failure Switch and Condensate Drain Pan Overflow Switch
D = Discharge Air Sensing and Condensate Drain Pan Overflow

Switch
E = Clogged Filter Switch, Fan Failure Switch and Condensate Drain Pan Overflow Switch
F = Clogged Filter Switch, Discharge Air Sensing Tube and Condensate Drain Pan Overflow Switch
G = Fan Failure Switch, Discharge Air Sensing Tube and Condensate Drain Pan Overflow Switch
H = Clogged Filter Switch, Fan Failure Switch, Discharge Air Sensing and Condensate Drain Pan Overflow Switch

Digit 26 - System Monitoring Controls

0 = No Monitoring Controls
A = Demand Control Ventilation (CO_2)[13]
B = Low Leak Economizer with FDD (Fault Detection and Diagnostics)
C = FDD (Fault Detection and Diagnostics) with DCV (Demand Control Ventilation)

Digit 27 - Unit Hardware Enhancements

0 = No Enhancements
1 = Stainless Steel Drain Pan

Digit 31 - Advanced Unit Controls

0 = Standard Unit Controls
1 = Human Interface

Model Number Notes

1. Manual outside air damper will ship factory supplied within the unit, but must be field installed.
2. High pressure control is standard on all units.
3. Multi-stage, direct drive standard on 3 to 5 tons models. Belt drive standard on 6 to 8.5 tons standard efficiency models. Variable speed direct drive standard on 10 tons models and 6 to 8.5 tons high efficiency models.
4. Economizer with barometric relief is for downflow configured units only. Order economizer without barometric relief for horizontal configuration. Barometric relief for horizontal configured units must be ordered as field installed accessory.
5. Through-the-base electric required when ordering disconnect/circuit breaker options.
6. Requires use of disconnect or circuit breaker.
7. Standard metering devices are TXVs.
8. The return air smoke detector may not fit up or work properly on the Precedent™ units when used in conjunction with 3rd party accessories such as bolt on heat wheels, economizers and power exhaust. Do not order the return air smoke detectors when using this type of accessory.
9. Requires hinged access panels.
10. Motorized outside air damper is not available on Multi-Speed or SZVAV (Single Zone Variable Air Volume) or MZVAV (Multi Zone Variable Air Volume) products.
11. Frostat™ standard on 6 to 10 tons high efficiency heat pump, multi-speed and SZVAV (single zone variable air volume) products.
12. Multi-speed indoor fan available on 6, 7.5, 8.5 and 10 tons products.
13. Demand control ventilation option includes wiring only. The CO_2 sensor is a field-installed only option.
14. SZVAV/MZVAV is available on all high efficiency models. SZVAV is also available on 7.5 to 10 tons standard efficiency models.
15. Must be used with BACnet® open protocol.
16. Crankcase heater is standard on all 3 to 10 tons heat pumps.
17. Includes gas piping and shutoff (field assembly required).

General Data

Table 3. General data - 3 to 5 tons - standard efficiency

	3 Tons	4 Tons	5 Tons
	WSC036H3,4,W	**WSC048H3,4,W**	**WSC060H3,4,W**
Cooling Performance[a]			
Gross Cooling Capacity	39,500	50,000	61,000
EER/SEER[b]	3,4 = 12.1/14.3 W = 12.0/14.3	3,4 = 12.3/14.3 W = 12.2/14.3	3,4 = 12.3/14.3 W = 12.2/14.3
EER2/SEER2[c]	10.6/13.4	10.6/13.4	10.6/13.4
Nominal cfm/AHRI Rated cfm	1,200/1,200	1,600/1,600	2,000/2,000
AHRI Net Cooling Capacity	39,000	49,000	60,000
System Power (kW)	3.22	3.98	4.88
Heating Performance[d]			
High Temp. Btuh Rating	36,000	47,500	59,000
System Power kW/COP	3.01/3.50	3.98/3.50	4.94/3.50
System Power kW/COP2	3.22/3.40	3.92/3.50	4.86/3.50
Low Temp. Btuh Rating	20,600	26,000	35,000
System Power kW/COP	2.74/2.20	3.31/2.30	4.46/2.30
System Power kW/COP2	2.71/2.20	3.57/2.30	4.35/2.30
HSPF (Btu/Watts-hr)	8.00	8.20	8.20
HSPF2	7.20	7.20	7.20
Compressor			
Number/Type	1/Scroll	1/Scroll	1/Scroll
Sound			
Outdoor Sound Rating (dB)[e]	81	82	87
Outdoor Coil			
Type	Lanced	Lanced	Lanced
Tube Size (in.)	0.3125	0.3125	0.3125
Face Area (sq. ft.)	12.33	12.33	17.00
Rows/FPI	2/16	3/16	3/16
Refrigerant Control	Thermal Expansion Valve	Thermal Expansion Valve	Thermal Expansion Valve
Indoor Coil			
Type	Lanced	Lanced	Lanced
Tube Size (in.)	0.3125	0.3125	0.3125
Face Area (sq. ft.)	8.74	8.74	9.27
Rows/FPI	3/16	3/16	3/16
Refrigerant Control	Thermal Expansion Valve	Thermal Expansion Valve	Thermal Expansion Valve
Drain Connection Number/Size (in.)	1¾ NPT	1¾ NPT	1¾ NPT
Outdoor Fan			
Type	Propeller	Propeller	Propeller
Number Used/Diameter (in.)	1/22	1/22	1/26
Drive Type/No. Speeds	Direct/1	Direct/1	Direct/1
cfm	3,600	4,050	5,130
Motor hp	0.25	0.33	0.40
Motor rpm	1,100	1,100	1,100

Table 3. General data - 3 to 5 tons - standard efficiency (continued)

	3 Tons	4 Tons	5 Tons
	WSC036H3,4,W	WSC048H3,4,W	WSC060H3,4,W
Indoor Fan			
Type (Standard)	FC Centrifugal	FC Centrifugal	FC Centrifugal
Number Used/Diameter (in.)/Width (in.)	1/11x11	1/11x11	1/11x11
Drive Type/No. Speeds/rpm	Direct/5[f]	Direct/5[f]	Direct/5[f]
Motor hp (standard/oversized)	0.75/1.5	1.0/1.5	1.0/1.5
Motor Frame Size (standard/oversized)	48/48	48/48	48/48
Filters[g]			
Type Furnished	Throwaway	Throwaway	Throwaway
Number Size Recommended	(2) 20x35x2	(2) 20x35x2	(4) 16x25x2
Refrigerant Charge[h]			
Pounds of R-410A	7.7	9.3	11.5

(a) Cooling performance is rated at 95°F ambient, 80°F entering dry bulb, 67°F entering wet bulb. Gross capacity does not include the effect of fan motor heat. AHRI capacity is net and includes the effect of fan motor heat. Units are suitable for operation to ±20% of nominal cfm. Units are certified in accordance with the Unitary Air-Conditioner Equipment certification program, which is based on AHRI Standard 210/240.
(b) EER and/or SEER are rated at AHRI conditions and in accordance with DOE test procedures.
(c) EER2 and SEER2 is rated at AHRI conditions and calculated in accordance with AHRI Standard 210/240-2023. Airflow and net cooling capacity not shown.
(d) Heating performance is rated at 47°F ambient with 43°F wet bulb, 70°F entering dry bulb, 60°F entering wet bulb. High temp. Btuh rating includes the effect of fan motor heat. Units are suitable for operation to ±20% of nominal cfm. Units are certified in accordance with the Unitary Air-Conditioner Equipment certification program, which is based on AHRI Standard 210/240.
(e) Outdoor sound rating shown is tested in accordance with AHRI Standard 270. For additional information reference the outdoor sound power level data in the performance section.
(f) For multispeed direct drive rpm values, reference the direct drive, evaporator fan performance table.
(g) Optional 2" MERV 8 and MERV 13 filters also available.
(h) Refrigerant charge is an approximate value. For a more precise value, see unit nameplate and service instructions.

Table 4. General data - 6 to 10 tons - standard efficiency

	7.5 Tons	8.5 Tons	10 Tons
	WSC092H3,4,W	WSC102H3,4,W	WSC120H3,4,W
Cooling Performance[a]			
Gross Cooling Capacity	95,300	103,200	118,100
EER[b]	11.3	11.0	11.0
Nominal cfm/AHRI Rated cfm	3,000/3,000	3,400/3,315	4,000/4,000
AHRI Net Cooling Capacity	93,000	100,000	115,000
IEER[c]	14.1[d]	14.1[d]	14.1[d]
System Power (kW)	8.23	9.09	10.45
Heating Performance[e]			
High Temp. Btuh Rating	88,000[f]	92,000[f]	106,000
System Power kW/COP	7.59/3.40	7.93/3.40	9.14/3.40
Low Temp. Btuh Rating	48,000	48,500	58,500
System Power kW/COP	6.25/2.25	6.77/2.10	7.62/2.25
Compressor			
Number/Type	1/Scroll (2 Stage)	1/Scroll (2 Stage)	1/Scroll (2 Stage)
Sound			
Outdoor Sound Rating (dB)[g]	86	85	86

Table 4. General data - 6 to 10 tons - standard efficiency (continued)

	7.5 Tons	8.5 Tons	10 Tons
	WSC092H3,4,W	WSC102H3,4,W	WSC120H3,4,W
Outdoor Coil			
Type	Lanced	Lanced	Lanced
Configuration	Full Face	Full Face	Full Face
Tube Size (in.)	0.3125	0.3125	0.3125
Face Area (sq. ft.)	19.83	23.34	23.34
Rows/FPI	3/16	3/16	3/16
Refrigerant Control	Thermal Expansion Valve	Thermal Expansion Valve	Thermal Expansion Valve
Indoor Coil			
Type	Lanced	Lanced	Lanced
Configuration	Full Face	Full Face	Full Face
Tube Size (in.)	0.3125	0.3125	0.3125
Face Area (sq. ft.)	12.36	12.36	12.36
Rows/FPI	3/16	4/16	4/16
Refrigerant Control	Thermal Expansion Valve	Thermal Expansion Valve	Thermal Expansion Valve
Drain Connection Number/Size (in.)	1¾ NPT	1¾ NPT	1¾ NPT
Outdoor Fan			
Type	Propeller	Propeller	Propeller
Number Used/Diameter (in.)	1/26	1/26	1/26
Drive Type/No. Speeds	Direct/1	Direct/1	Direct/1
cfm	6,200	6,200	6,200
Motor hp	0.70	0.70	0.70
Motor rpm	1,100	1,100	1,100
Indoor Fan			
Type	FC Centrifugal[h]	FC Centrifugal[h]	BC Plenum
Number Used/Diameter (in.)/Width (in.)	1/15 x 15[i]	1/15 x 15[i]	1/19.7x15
Drive Type/No. Speeds/rpm	Belt/ Variable/1,750[j]	Belt/ Variable/1,750[j]	Direct/Variable[k]
Motor hp (Standard/Oversized)	1.0/3.0[l]	2.0/3.0[l]	2.75/—
Motor Frame Size (Standard/Oversized)	56/56	56/56	—/—
Filters[m]			
Type Furnished	Throwaway	Throwaway	Throwaway
Number Size Recommended	(4) 20x25x2	(4) 20x25x2	(4) 20x25x2
Refrigerant Charge[n]			
Pounds of R-410A	14.6	18.0	16.3

(a) Cooling performance is rated at 95°F ambient, 80°F entering dry bulb, 67°F entering wet bulb. Gross capacity does not include the effect of fan motor heat. AHRI capacity is net and includes the effect of fan motor heat. Units are suitable for operation to ±20% of nominal cfm. Units are certified in accordance with the Unitary Air-Conditioner Equipment certification program, which is based on ARI Standard 340/360.
(b) EER and/or SEER are rated at AHRI conditions and in accordance with DOE test procedures.
(c) Integrated Efficiency Ratio (IEER) is rated in accordance with AHRI Standard 340/360. The IEER rating requires that the unit efficiency be determined at 100%, 75%, 50% and 25% load (net capacity) at the specified in AHRI Standard.
(d) 14.6 IEER for SZVAV and Title 24 2-speed fan option.
(e) Heating performance is rated at 47°F ambient with 43°F wet bulb, 70°F entering dry bulb, 60°F entering wet bulb. High temp. Btu/h Rating includes the effect of fan motor heat. Units are suitable for operation to ±20% of nominal cfm. Units are certified in accordance with the Unitary Air-Conditioner Equipment certification program, which is based on AHRI Standard 340/360.
(f) For SZVAV/Title 24 option, 8.5 tons high temp. Btuh rating = 89,000, 7.5 Tons high temp. Btuh rating = 87,000.
(g) Outdoor sound rating shown is tested in accordance with AHRI Standard 270-2015. For additional information reference the outdoor sound power level data in the performance section.
(h) For SZVAV/Title 24 option, backward airfoil plenum.
(i) For SZVAV/Title 24 option, 1/19.7X15.
(j) For SZVAV/Title 24 option, direct/variable.
(k) For multispeed direct drive rpm values, reference the direct drive, evaporator fan performance table.
(l) For SZVAV/Title 24 option, 2.75.

(m) Optional 2” MERV 8 and MERV 13 filters also available.
(n) Refrigerant charge is an approximate value. For a more precise value, see unit nameplate and service instructions.

Table 5. General data - 3 to 5 tons - high efficiency

	3 Tons	4 Tons	5 Tons
	WHC036H3,4,W	WHC048H3,4,W	WHC060H3,4,W
Cooling Performance[a]			
Gross Cooling Capacity-High Stage	36,400	48,750	61,000
EER/SEER[b]	12.5/16.0	13.0/16.5	3=13.0/16.4 4,W=12.9/16.2
EER2/SEER2[c]	12.5/15.6	12.5/16.1	12.5/16.1
Nominal cfm-High Stage/AHRI Rated cfm	1,200/1,200	1,600/1,680	2,000/2,000
Nominal cfm-Low Stage/AHRI Rated cfm	840	1,120	1,400
AHRI Net Cooling Capacity-High Stage	36,000	48,000	60,000
System Power-High Stage (kW)	2.88	3.69	4.62
Heating Performance[d]			
High Temp. Btuh Rating-High Stage	32,200	44,000	57,000
System Power kW/COP-High Stage	2.62/3.60	3.58/3.60	4.64/3.60
System Power kW/COP2	2.71/3.50	3.53/3.60	4.41/3.60
Low Temp. Btuh Rating-High Stage	21,400	24,000	34,400
System Power kW/COP-High Stage	2.73/2.30	3.06/2.30	4.38/2.30
System Power kW/COP2	2.45/2.10	3.18/2.30	3.98/2.30
HSPF (Btu/Watts-hr)	8.80	8.80	9.00
HSPF2	8.00	8.40	8.50
Compressor			
Number/Type	1/Scroll (2-stage)	1/Scroll (2-stage)	1/Scroll (2-stage)
Sound			
Outdoor Sound Rating (dB)[e]	81	87	87
Outdoor Coil			
Type	Lanced	Lanced	Lanced
Tube Size (in.)	0.3125	0.3125	0.3125
Face Area (sq. ft.)	12.33	17.00	17.00
Rows/FPI	3/16	3/16	3/16
Refrigerant Control	Thermal Expansion Valve	Thermal Expansion Valve	Thermal Expansion Valve
Indoor Coil			
Type	Lanced	Lanced	Lanced
Tube Size (in.)	0.3125	0.3125	0.3125
Face Area (sq. ft.)	8.74	9.27	9.27
Rows/FPI	3/16	3/16	3/16
Refrigerant Control	Thermal Expansion Valve	Thermal Expansion Valve	Thermal Expansion Valve
Drain Connection Number/Size (in.)	1¾ NPT	1¾ NPT	1¾ NPT
Outdoor Fan			
Type	Propeller	Propeller	Propeller
Number Used/Diameter (in.)	1/22	1/26	1/26
Drive Type/No. Speeds	Direct/1	Direct/1	Direct/1
cfm	3,600	5,130	5,130
Motor hp	0.25	0.40	0.40
Motor rpm	1,100	1,100	1,100

Table 5. General data - 3 to 5 tons - high efficiency (continued)

	3 Tons	4 Tons	5 Tons
	WHC036H3,4,W	WHC048H3,4,W	WHC060H3,4,W
Indoor Fan			
Type (Standard)	FC Centrifugal	FC Centrifugal	FC Centrifugal
Number Used/Diameter (in.)/Width (in.)	1/11x11	1/11x11	1/11x11
Drive Type/No. Speeds/rpm	Direct/Variable	Direct/Variable	Direct/Variable
Motor hp (standard/oversized)	0.75/1.5	1.0/1.5	1.0/1.5
Motor Frame Size (standard/oversized)	48/48	48/48	48/48
Filters[f]			
Type Furnished	Throwaway	Throwaway	Throwaway
Number Size Recommended	(2) 20x35x2	(4) 16x25x2	(4) 16x25x2
Refrigerant Charge[g]			
Pounds of R-410A	8.8	10.8	10.8

(a) Cooling performance is rated at 95°F ambient, 80°F entering dry bulb, 67°F entering wet bulb. Gross capacity does not include the effect of fan motor heat. AHRI capacity is net and includes the effect of fan motor heat. Units are suitable for operation to ±20% of nominal cfm. Units are certified in accordance with the Unitary Air-Conditioner Equipment certification program, which is based on AHRI Standard 210/240.
(b) EER and/or SEER are rated at AHRI conditions and in accordance with DOE test procedures.
(c) EER2 and SEER2 is rated at AHRI conditions and calculated in accordance with AHRI Standard 210/240-2023. Airflow and net cooling capacity not shown.
(d) Heating performance is rated at 47°F ambient with 43°F wet bulb, 70°F entering dry bulb, 60°F entering wet bulb. High temp. Btuh rating includes the effect of fan motor heat. Units are suitable for operation to ±20% of nominal cfm. Units are certified in accordance with the Unitary Air-Conditioner Equipment certification program, which is based on AHRI Standard 210/240.
(e) Outdoor sound rating shown is tested in accordance with AHRI Standard 270. For additional information reference the outdoor sound power level data in the performance section.
(f) Optional 2” MERV 8 and MERV 13 filters also available.
(g) Refrigerant charge is an approximate value. For a more precise value, see unit nameplate and service instructions.

Table 6. General data - 6 to 10 tons - high efficiency

	6 Tons	7.5 Tons	8.5 Tons	10 Tons
	WHC074H3,4,W	WHC092H3,4,W	WHC102H3,4,W	WHC120H3,4,W
Cooling Performance[a]				
Gross Cooling Capacity - High Stage	78,900	96,200	105,900	123,600
EER[b]	12.1	11.8	3,4 = 12.0 / W = 11.8	11.5
Nominal CFM-High Stage / ARI Rated CFM	2,400 / 2,400	3,000 / 3,000	3,400 / 3,400	4,000 / 4,000
Nominal CFM-Low Stage / ARI Rated CFM	1,560	1,950	2,210	2,600
ARI Net Cooling Capacity - High Stage	78,000	95,000	104,000	121,000
IEER[c]	15.5[d]	15.5[d]	15.5[d]	15.5[d]
System Power - High Stage (kW)	6.45	8.05	8.67	10.52
Heating Performance[e]				
High Temp. Btuh Rating - High Stage	75,000	87,000	93,000	118,000
System Power kW/COP - High Stage	6.28 / 3,4 = 3.50 6.32 / W = 3.48	7.29 / 3,4 = 3.50 7.33 / W = 3.48	7.51 / 3,4 = 3.63 7.55 / W = 3.61	9.53 / 3,4 = 3.63 9.58 / W = 3.61
Low Temp. Btuh Rating - High Stage	40,000	49,000	57,000	61,000
System Power kW/COP - High Stage	5.21 / 2.25	6.38 / 2.25	7.42 / 2.25	7.95 / 2.25
Compressor				
Number/Type	2 / Scroll	2 / Scroll	2 / Scroll	2 / Scroll
Sound				
Outdoor Sound Rating (dB)[f]	86	86	85	85

Table 6. General data - 6 to 10 tons - high efficiency (continued)

	6 Tons	7.5 Tons	8.5 Tons	10 Tons
	WHC074H3,4,W	WHC092H3,4,W	WHC102H3,4,W	WHC120H3,4,W
Outdoor Coil				
Type	Lanced	Lanced	Lanced	Lanced
Configuration	Full Face	Full Face	Full Face	Full Face
Tube Size (in.)	0.3125	0.3125	0.3125	0.3125
Face Area (sq. ft.)	19.83	19.83	23.34	25.56
Rows/FPI	3 / 16	3 / 16	3 / 16	4 / 16
Refrigerant Control	Thermal Expansion Valve	Thermal Expansion Valve	Thermal Expansion Valve	Thermal Expansion Valve
Indoor Coil				
Type	Lanced	Lanced	Lanced	Lanced
Configuration	Full Face	Full Face	Full Face	Full Face
Tube Size (in.)	0.3125	0.3125	0.3125	0.3125
Face Area (sq. ft.)	12.36	12.36	12.36	16.59
Rows/FPI	3 / 16	3 / 16	4 / 16	4 / 16
Refrigerant Control	Thermal Expansion Valve	Thermal Expansion Valve	Thermal Expansion Valve	Thermal Expansion Valve
Drain Connection Number/Size (in.)	1¾ NPT	1¾ NPT	1¾ NPT	1¾ NPT
Outdoor Fan				
Type	Propeller	Propeller	Propeller	Propeller
Number Used/Diameter (in.)	1 / 26	1 / 26	1 / 26	1 / 30
Drive Type/No. Speeds	Direct / 1	Direct / 1	Direct / 1	Direct / 1
cfm	6200	6200	6200	6900
Motor hp	0.70	0.70	0.70	0.75
Motor rpm	1,100	1,100	1,100	1,100
Indoor Fan				
Type (Standard)	BC Plenum	BC Plenum	BC Plenum	BC Plenum
Number Used/Diameter (in.)/Width (in.)	1 / 19.7x15	1 / 19.7x15	1 / 19.7x15	1 / 19.7x15
Drive Type/No. Speeds/rpm	Direct/Variable[g]	Direct/Variable[g]	Direct/Variable[g]	Direct/Variable[g]
Motor hp (Standard/Oversized)	2.75 / -	2.75 / -	2.75 / -	2.75 / -
Motor Frame Size (Standard/Oversized)	- / -	- / -	- / -	- / -
Filters[h]				
Type Furnished	Throwaway	Throwaway	Throwaway	Throwaway
Number Size Recommended	(4) 20x25x2	(4) 20x25x2	(4) 20x25x2	(3) 20x25x2 (2) 20x30x2
Refrigerant Charge[i]				
Pounds of R-410A	14.5	14.2	17.0	23.9

(a) Cooling performance is rated at 95°F ambient, 80°F entering dry bulb, 67°F entering wet bulb. Gross capacity does not include the effect of fan motor heat. AHRI capacity is net and includes the effect of fan motor heat. Units are suitable for operation to ±20% of nominal cfm. Units are certified in accordance with the Unitary Air-Conditioner Equipment certification program, which is based on ARI Standard 340/360.
(b) EER and/or SEER are rated at AHRI conditions and in accordance with DOE test procedures.
(c) Integrated Efficiency Ratio (IEER) is rated in accordance with AHRI Standard 340/360. The IEER rating requires that the unit efficiency be determined at 100%, 75%, 50% and 25% load (net capacity) at the specified in AHRI Standard.
(d) 16.5 IEER for SZ/MZVAV option, 16.0 IEER for Title24 2 speed fan option.
(e) Heating performance is rated at 47°F ambient with 43°F wet bulb, 70°F entering dry bulb, 60°F entering wet bulb. High temp. Btu/h Rating includes the effect of fan motor heat. Units are suitable for operation to ±20% of nominal cfm. Units are certified in accordance with the Unitary Air-Conditioner Equipment certification program, which is based on AHRI Standard 340/360.
(f) Outdoor sound rating shown is tested in accordance with AHRI Standard 270-2015. For additional information reference the outdoor sound power level data in the performance section.
(g) For multispeed direct drive rpm values, reference the direct drive, evaporator fan performance tables.
(h) Optional 2” MERV 8 and MERV 13 filters also available.
(i) Refrigerant charge is an approximate value. For a more precise value, see unit nameplate and service instructions.

Table 7. General data - 3 to 5 tons - dual fuel efficiency

	3 Tons	4 Tons	5 Tons
	DHC036H3,4,W	DHC048H3,4,W	DHC060H3,4,W
Cooling Performance[a]			
Gross Cooling Capacity-High Stage	36,400	48,750	61,000
EER/SEER[b]	3=12.5/15.7 4,W=12.5/15.6	13.0/16.5	3=12.8/16.2 4,W=12.8/16.0
Nominal cfm-High Stage/AHRI Rated cfm	1,200/1,200	1,600/1,680	2,000/2,000
Nominal cfm-Low Stage/AHRI Rated cfm	840	1,120	1,400
AHRI Net Cooling Capacity-High Stage	36,000	48,000	60,000
System Power-High Stage (kW)	2.88	3.69	4.69
Heating Performance[c]			
High Temp. Btuh Rating-High Stage	32,200	44,000	57,000
System Power kW/COP-High Stage	2.62/3.60	3.58/3.60	4.64/3.60
Low Temp. Btuh Rating-High Stage	21,400	24,000	34,400
System Power kW/COP-High Stage	2.73/2.30	3.06/2.30	4.38/2.30
HSPF (Btu/Watts-hr)	8.80	8.80	8.90
Compressor			
Number/Type	1/Scroll (2-stage)	1/Scroll (2-stage)	1/Scroll (2-stage)
Sound			
Outdoor Sound Rating (dB)[d]	81	87	87
Outdoor Coil			
Type	Lanced	Lanced	Lanced
Tube Size (in.)	0.3125	0.3125	0.3125
Face Area (sq. ft.)	12.33	17.00	17.00
Rows/FPI	3/16	3/16	3/16
Refrigerant Control	Thermal Expansion Valve	Thermal Expansion Valve	Thermal Expansion Valve
Indoor Coil			
Type	Lanced	Lanced	Lanced
Tube Size (in.)	0.3125	0.3125	0.3125
Face Area (sq. ft.)	8.74	9.27	9.27
Rows/FPI	3/16	3/16	3/16
Refrigerant Control	Thermal Expansion Valve	Thermal Expansion Valve	Thermal Expansion Valve
Drain Connection Number/Size (in.)	1¾ NPT	1¾ NPT	1¾ NPT
Outdoor Fan			
Type	Propeller	Propeller	Propeller
Number Used/Diameter (in.)	1/22	1/26	1/26
Drive Type/No. Speeds	Direct/1	Direct/1	Direct/1
cfm	3,600	5,130	5,130
Motor hp	0.25	0.40	0.40
Motor rpm	1,100	1,100	1,100
Indoor Fan			
Type (Standard)	FC Centrifugal	FC Centrifugal	FC Centrifugal
Number Used/Diameter (in.)/Width (in.)	1/11x11	1/11x11	1/11x11
Drive Type/No. Speeds/rpm	Direct/Variable	Direct/Variable	Direct/Variable
Motor hp (standard)	0.75	1.0	1.0
Motor Frame Size (standard)	48	48	48

Table 7. General data - 3 to 5 tons - dual fuel efficiency (continued)

	3 Tons	4 Tons	5 Tons
	DHC036H3,4,W	DHC048H3,4,W	DHC060H3,4,W
Filters[e]			
Type Furnished	Throwaway	Throwaway	Throwaway
Number Size Recommended	(2) 20x35x2	(4) 16x25x2	(4) 16x25x2
Refrigerant Charge[f]			
Pounds of R-410A	8.8	10.8	10.8
Gas Heating Performance (Dual Fuel Only)[g]			
Gas Heating Input (2nd stage/1st stage)			
Low Heat Input (Btu)	60,000/42,000	60,000/42,000	60,000/42,000
Mid Heat Input (Btu)	80,000/56,000	100,000/70,000	100,000/72,000
High Heat Input (Btu)	100,000/70,000	130,000/91,000	150,000/105,000
Gas Heating Output (2nd stage/1st stage)			
Low Heat Output (Btu)	48,600/34,020	48,600/34,020	48,600/34,020
Mid Heat Output (Btu)	64,800/45,360	81,000/56,700	81,000/58,320
High Heat Output (Btu)	81,000/56,700	105,300/73,710	121,500/85,050
Steady State Efficiency %	81%	81%	81%
No. Burners			
Low Heat Output (Btu)	2	2	2
Mid Heat Output (Btu)	2	3	3
High Heat Output (Btu)	3	3	4
No. Stages			
Low Heat Input (Btu)	2	2	2
Mid Heat Input (Btu)	2	2	2
High Heat Input (Btu)	2	2	2
Gas Supply Line Pressure			
Natural (minimum/maximum)	4.5/14.0	4.5/14.0	4.5/14.0
LP (minimum/maximum)	N/A	N/A	N/A
Gas Connection Pipe Size (in.)			
Low Heat	1/2	1/2	1/2
Mid Heat	1/2	1/2	1/2
High Heat	1/2	3/4	3/4

(a) Cooling performance is rated at 95°F ambient, 80°F entering dry bulb, 67°F entering wet bulb. Gross capacity does not include the effect of fan motor heat. AHRI capacity is net and includes the effect of fan motor heat. Units are suitable for operation to ±20% of nominal cfm. Units are certified in accordance with the Unitary Air-Conditioner Equipment certification program, which is based on AHRI Standard 210/240.
(b) EER and/or SEER are rated at AHRI conditions and in accordance with DOE test procedures.
(c) Heating performance is rated at 47°F ambient with 43°F wet bulb, 70°F entering dry bulb, 60°F entering wet bulb. High temp. Btuh rating includes the effect of fan motor heat. Units are suitable for operation to ±20% of nominal cfm. Units are certified in accordance with the Unitary Air-Conditioner Equipment certification program, which is based on AHRI Standard 210/240.
(d) Outdoor sound rating shown is tested in accordance with AHRI Standard 270. For additional information reference the outdoor sound power level data in the performance section.
(e) Optional 2” MERV 8 and MERV 13 filters also available.
(f) Refrigerant charge is an approximate value. For a more precise value, see unit nameplate and service instructions.
(g) Heating performance limit settings and rating data were established and approved under laboratory test conditions using American National Standards Institute standards. Ratings shown are for elevations up to 2000 feet. For elevations above 2000 feet, ratings should be reduced at the rate of 4% for each 1000 feet above sea level. Applicable to dual fuel units only.

Table 8. General data - 6 to 10 tons - dual fuel efficiency

	6 Tons	7.5 Tons	8.5 Tons	10 Tons
	DHC074H3,4,W	DHC092H3,4,W	DHC102H3,4,W	DHC120H3,4,W
Cooling Performance[a]				
Gross Cooling Capacity - High Stage	78,900	96,200	105,900	123,600
EER[b]	12.1	11.8	3,4 = 12.0 / W = 11.8	11.5
Nominal CFM-High Stage / ARI Rated CFM	2,400 / 2,400	3,000 / 3,000	3,400 / 3,400	4,000 / 4,000
Nominal CFM-Low Stage / ARI Rated CFM	1,560	1,950	2,210	2,600
ARI Net Cooling Capacity - High Stage	78,000	95,000	104,000	121,000
IEER[c]	15.5[d]	15.5[d]	15.5[d]	15.5[d]
System Power - High Stage (kW)	6.45	8.05	8.67	10.52
Heating Performance[e]				
High Temp. Btuh Rating - High Stage	75,000	87,000	93,000	118,000
System Power kW/COP - High Stage	6.28 / 3,4 = 3.50 6.32 / W = 3.48	7.29 / 3,4 = 3.50 7.33 / W = 3.48	7.51 / 3,4 = 3.63 7.55 / W = 3.61	9.53 / 3,4 = 3.63 9.58 / W = 3.61
Low Temp. Btuh Rating - High Stage	40,000	49,000	57,000	61,000
System Power kW/COP - High Stage	5.21 / 2.25	6.38 / 2.25	7.42 / 2.25	7.95 / 2.25
Compressor				
Number/Type	2 / Scroll	2 / Scroll	2 / Scroll	2 / Scroll
Sound				
Outdoor Sound Rating (dB)[f]	86	86	85	85
Outdoor Coil				
Type	Lanced	Lanced	Lanced	Lanced
Configuration	Full Face	Full Face	Full Face	Full Face
Tube Size (in.)	0.3125	0.3125	0.3125	0.3125
Face Area (sq. ft.)	19.83	19.83	23.34	25.56
Rows/FPI	3 / 16	3 / 16	3 / 16	4 / 16
Refrigerant Control	Thermal Expansion Valve	Thermal Expansion Valve	Thermal Expansion Valve	Thermal Expansion Valve
Indoor Coil				
Type	Lanced	Lanced	Lanced	Lanced
Configuration	Full Face	Full Face	Full Face	Full Face
Tube Size (in.)	0.3125	0.3125	0.3125	0.3125
Face Area (sq. ft.)	12.36	12.36	12.36	16.59
Rows/FPI	3 / 16	3 / 16	4 / 16	4 / 16
Refrigerant Control	Thermal Expansion Valve	Thermal Expansion Valve	Thermal Expansion Valve	Thermal Expansion Valve
Drain Connection Number/Size (in.)	1¾ NPT	1¾ NPT	1¾ NPT	1¾ NPT
Outdoor Fan				
Type	Propeller	Propeller	Propeller	Propeller
Number Used/Diameter (in.)	1 / 26	1 / 26	1 / 26	1 / 30
Drive Type/No. Speeds	Direct / 1	Direct / 1	Direct / 1	Direct / 1
cfm	6200	6200	6200	6900
Motor hp	0.70	0.70	0.70	0.75
Motor rpm	1,100	1,100	1,100	1,100

Table 8. General data - 6 to 10 tons - dual fuel efficiency (continued)

	6 Tons	7.5 Tons	8.5 Tons	10 Tons
	DHC074H3,4,W	DHC092H3,4,W	DHC102H3,4,W	DHC120H3,4,W
Indoor Fan				
Type (Standard)	BC Plenum	BC Plenum	BC Plenum	BC Plenum
Number Used/Diameter (in.)/Width (in.)	1 / 19.7x15	1 / 19.7x15	1 / 19.7x15	1 / 19.7x15
Drive Type/No. Speeds/rpm	Direct/Variable(g)	Direct/Variable(g)	Direct/Variable(g)	Direct/Variable(g)
Motor hp (Standard/Oversized)	2.75 / -	2.75 / -	2.75 / -	2.75 / -
Motor Frame Size (Standard/Oversized)	- / -	- / -	- / -	- / -
Filters(h)				
Type Furnished	Throwaway	Throwaway	Throwaway	Throwaway
Number Size Recommended	(4) 20x25x2	(4) 20x25x2	(4) 20x25x2	(3) 20x25x2 (2) 20x30x2
Refrigerant Charge(i)				
Pounds of R-410A	14.5	14.2	17.0	23.9

(a) Cooling performance is rated at 95°F ambient, 80°F entering dry bulb, 67°F entering wet bulb. Gross capacity does not include the effect of fan motor heat. AHRI capacity is net and includes the effect of fan motor heat. Units are suitable for operation to ±20% of nominal cfm. Units are certified in accordance with the Unitary Air-Conditioner Equipment certification program, which is based on ARI Standard 340/360.
(b) EER and/or SEER are rated at AHRI conditions and in accordance with DOE test procedures.
(c) Integrated Efficiency Ratio (IEER) is rated in accordance with AHRI Standard 340/360. The IEER rating requires that the unit efficiency be determined at 100%, 75%, 50% and 25% load (net capacity) at the specified in AHRI Standard.
(d) 16.5 IEER for SZ/MZVAV option, 16.0 IEER for Title24 2 speed fan option.
(e) Heating performance is rated at 47°F ambient with 43°F wet bulb, 70°F entering dry bulb, 60°F entering wet bulb. High temp. Btu/h Rating includes the effect of fan motor heat. Units are suitable for operation to ±20% of nominal cfm. Units are certified in accordance with the Unitary Air-Conditioner Equipment certification program, which is based on AHRI Standard 340/360.
(f) Outdoor sound rating shown is tested in accordance with AHRI Standard 270-2015. For additional information reference the outdoor sound power level data in the performance section.
(g) For multispeed direct drive rpm values, reference the direct drive, evaporator fan performance tables.
(h) Optional 2" MERV 8 and MERV 13 filters also available.
(i) Refrigerant charge is an approximate value. For a more precise value, see unit nameplate and service instructions.

Table 9. Heating Performance - 6 to 10 tons - dual fuel efficiency (gas/electric only)

	6 Tons			7.5 Tons			8.5 Tons			10 Tons		
	DHC074H3,4,W			DHC092H3,4,W			DHC102H3,4,W			DHC120H3,4,W		
Heating Models	**Low**	**Medium**	**High**	**Low**	**Medium**	**High**	**Low**	**Medium**	**High**	**Low**	**Medium**	**High**
Heating Input (Btu)	80,000	120,000	150,000 / 105,000	120,000	150,000 / 105,000	200,000/ 140,000	120,000	150,000 / 105,000	200,000/ 140,000	150,000/ 105,000	200,000/ 140,000	250,000/ 175,000
Heating Output (Btu)	64,800	97,200	121,500 / 85,050	97,200	121,500 / 85,050	162,000/ 113,400	97,200	121,500 / 85,050	162,000/ 113,400	121,500 / 85,050	162,000/ 113,400	202,500/ 141,750
Steady State Efficiency %	81			81			81			81		
No. Burners	3	3	3	3	3	5	3	3	5	3	4	5
No. Stages	1	1	2	1	2	2	1	2	2	2	2	2
Gas Supply Line Pressure												
Natural (minimum/maximum) "w.c.	4.5 / 14.0			4.5 / 14.0			4.5 / 14.0			4.5 / 14.0		
LP (minimum/maximum) "w.c.	11.0 / 14.0			11.0 / 14.0			11.0 / 14.0			11.0 / 14.0		
Gas Connection Pipe Size (in)	1/2	1/2	3/4	1/2	3/4	3/4	1/2	3/4	3/4	3/4	3/4	3/4

Note: Heating performance limit settings and rating data were established and approved under laboratory test conditions using American National Standards Institute standards. Ratings shown are for elevations up to 2000 feet. For elevations above 2000 feet, ratings should be reduced at the rate of 4% for each 1000 feet above sea level. Applicable to Gas/Electric units only.

Gross Cooling Capacities

Table 10. Gross cooling capacities 3 tons standard efficiency - three phase WSC036H3,4,W

		Ambient Temperature (°F)						Ambient Temperature (°F)						Ambient Temperature (°F)					
		85						95						105					
	Ent	Entering Wet Bulb (°F)						Entering Wet Bulb (°F)						Entering Wet Bulb (°F)					
	DB	61		67		73		61		67		73		61		67		73	
cfm	(°F)	MBh	SHC	MBh	SHC	MBh	SHC	MBh	SHC	MBh	SHC	MBh	SHC	MBh	SHC	MBh	SHC	MBh	SHC
960	75	36.0	28.2	40.5	22.2	45.2	15.9	33.6	26.8	37.8	20.9	42.3	14.7	31.0	25.4	35.1	19.5	39.3	13.3
960	80	36.0	33.2	40.6	27.3	45.3	21.1	33.6	31.7	38.0	26.0	42.4	19.8	31.1	30.3	35.2	24.7	39.4	18.5
960	85	36.2	36.2	40.7	32.4	45.4	26.3	34.1	34.1	38.0	31.1	42.5	25.0	32.1	32.1	35.3	29.7	39.5	23.6
960	90	38.2	38.2	40.7	37.4	45.5	31.4	36.2	36.2	38.1	36.1	42.6	30.1	34.1	34.1	35.4	34.6	39.6	28.8
1080	75	36.8	30.0	41.4	23.3	46.1	16.2	34.3	28.6	38.6	21.9	43.0	14.9	31.6	27.2	35.7	20.5	39.8	13.5
1080	80	36.9	35.5	41.5	29.0	46.2	22.0	34.4	34.1	38.7	27.7	43.1	20.7	31.8	31.8	35.8	26.3	40.0	19.4
1080	85	37.8	37.8	41.6	34.8	46.3	27.8	35.7	35.7	38.8	33.4	43.3	26.5	33.5	33.5	35.9	32.0	40.1	25.1
1080	90	40.1	40.1	41.7	40.3	46.4	33.6	38.0	38.0	39.0	38.9	43.4	32.3	35.7	35.7	36.2	36.2	40.2	30.9
1200	75	37.5	31.9	42.1	24.3	46.8	16.5	34.8	30.4	39.2	22.9	43.6	15.1	32.1	28.8	36.1	21.5	40.3	13.7
1200	80	37.7	37.7	42.2	30.7	46.9	23.0	35.1	35.1	39.3	29.3	43.7	21.6	32.5	32.5	36.3	27.9	40.4	20.2
1200	85	39.4	39.4	42.3	37.1	47.0	29.4	37.1	37.1	39.5	35.7	43.9	28.0	34.8	34.8	36.5	34.3	40.6	26.6
1200	90	41.8	41.8	42.6	42.6	47.1	35.8	39.5	39.5	39.8	39.8	44.0	34.4	37.1	37.1	37.1	37.1	40.7	33.0
1320	75	38.1	33.7	42.7	25.4	47.3	16.8	35.3	32.2	39.6	23.9	44.0	15.4	32.4	30.4	36.5	22.5	40.6	13.9
1320	80	38.5	38.5	42.8	32.4	47.4	23.9	35.9	35.9	39.8	31.0	44.1	22.5	33.5	33.5	36.7	29.5	40.8	21.0
1320	85	40.8	40.8	43.0	39.4	47.6	30.9	38.4	38.4	40.0	37.7	44.3	29.5	35.9	35.9	36.9	36.2	40.9	28.1
1320	90	43.3	43.3	43.5	43.5	47.7	38.0	40.8	40.8	40.9	40.9	44.5	36.6	38.2	38.2	38.3	38.3	41.1	35.1
1440	75	38.6	35.5	43.1	26.4	47.8	17.0	35.7	33.7	40.0	24.9	44.3	15.6	32.8	32.1	36.8	23.4	40.8	14.1
1440	80	39.3	39.3	43.3	34.1	47.9	24.7	36.9	36.9	40.2	32.6	44.5	23.3	34.4	34.4	37.0	31.1	41.0	21.8
1440	85	42.0	42.0	43.5	41.5	48.1	32.5	39.5	39.5	40.5	40.0	44.7	31.0	36.8	36.8	37.4	37.4	41.2	29.6
1440	90	44.5	44.5	44.6	44.6	48.2	40.1	41.9	41.9	42.0	42.0	44.9	38.7	39.2	39.2	39.3	39.3	41.4	37.3

		Ambient Temperature (°F)						Ambient Temperature (°F)					
		115						125					
	Ent	Entering Wet Bulb (°F)						Entering Wet Bulb (°F)					
	DB	61		67		73		61		67		73	
cfm	(°F)	MBh	SHC	MBh	SHC	MBh	SHC	MBh	SHC	MBh	SHC	MBh	SHC
960	75	28.4	24.0	32.2	18.2	36.1	12.0	25.7	22.6	29.3	16.8	32.8	10.6
960	80	28.5	28.5	32.4	23.3	36.2	17.2	25.8	25.8	29.4	21.9	33.0	15.8
960	85	29.9	29.9	32.4	28.4	36.4	22.3	27.7	27.7	29.5	26.9	33.1	20.9
960	90	31.9	31.9	32.6	32.6	36.5	27.4	29.6	29.6	29.7	29.7	33.2	26.0
1080	75	28.8	25.8	32.7	19.1	36.6	12.2	26.0	24.1	29.6	17.7	33.1	10.8
1080	80	29.2	29.2	32.9	24.9	36.7	18.0	26.8	26.8	29.7	23.4	33.3	16.6
1080	85	31.2	31.2	33.0	30.6	36.8	23.8	28.8	28.8	29.9	28.9	33.4	22.3
1080	90	33.3	33.3	33.4	33.4	37.0	29.5	30.8	30.8	30.9	30.9	33.6	28.1
1200	75	29.2	27.2	33.0	20.1	36.9	12.3	26.3	25.7	29.8	18.6	33.3	10.9
1200	80	30.2	30.2	33.2	26.5	37.0	18.8	27.7	27.7	30.0	25.0	33.5	17.3
1200	85	32.3	32.3	33.4	32.5	37.2	25.2	29.8	29.8	30.3	30.3	33.6	23.7
1200	90	34.5	34.5	34.6	34.6	37.3	31.6	31.8	31.8	31.9	31.9	33.8	30.1
1320	75	29.5	28.9	33.3	21.0	37.1	12.5	26.5	26.5	29.9	19.5	33.4	11.0
1320	80	31.0	31.0	33.5	28.0	37.3	19.6	28.4	28.4	30.1	26.5	33.6	18.1
1320	85	33.3	33.3	33.8	33.8	37.4	26.6	30.5	30.5	30.6	30.6	33.8	25.1
1320	90	35.5	35.5	35.6	35.6	37.6	33.7	32.7	32.7	32.7	32.7	34.0	31.8
1440	75	29.8	29.8	33.5	21.9	37.2	12.6	26.8	26.8	30.0	20.4	33.4	11.1
1440	80	31.7	31.7	33.7	29.6	37.4	20.4	28.9	28.9	30.2	27.7	33.7	18.8
1440	85	34.1	34.1	34.2	34.2	37.6	28.1	31.2	31.2	31.2	31.2	33.9	26.5
1440	90	36.4	36.4	36.4	36.4	37.9	35.4	33.3	33.3	33.4	33.4	34.2	33.8

Notes:

1. All capacities shown are gross and have not considered indoor fan heat. To obtain **NET** cooling capacity subtract indoor fan heat. For indoor fan heat formula, refer to appropriate airflow table notes.
2. MBh = Total Gross Capacity
3. SHC = Sensible Heat Capacity

Gross Cooling Capacities

Table 11. Gross cooling capacities 4 tons standard efficiency - three phase WSC048H3,4,W

		Ambient Temperature (°F)						Ambient Temperature (°F)						Ambient Temperature (°F)					
		85						95						105					
	Ent	Entering Wet Bulb (°F)						Entering Wet Bulb (°F)						Entering Wet Bulb (°F)					
	DB	61		67		73		61		67		73		61		67		73	
cfm	(°F)	MBh	SHC	MBh	SHC	MBh	SHC	MBh	SHC	MBh	SHC	MBh	SHC	MBh	SHC	MBh	SHC	MBh	SHC
1280	75	45.5	36.5	50.8	28.3	56.4	19.8	42.8	35.0	47.9	26.8	53.1	18.3	40.0	33.5	44.8	25.3	49.7	16.8
1280	80	45.9	43.3	51.0	35.2	56.6	26.8	43.3	41.7	48.1	33.7	53.3	25.3	40.6	40.2	45.0	32.2	49.9	23.8
1280	85	47.4	47.4	51.2	42.1	56.7	33.7	45.1	45.1	48.3	40.6	53.5	32.2	42.7	42.7	45.3	39.1	50.1	30.7
1280	90	50.1	50.1	51.7	48.8	56.9	40.6	47.8	47.8	48.9	47.3	53.7	39.1	45.3	45.3	45.9	45.7	50.4	37.6
1440	75	46.6	39.1	51.8	29.8	57.4	20.2	43.8	37.6	48.7	28.3	54.0	18.7	40.9	36.0	45.5	26.7	50.4	17.2
1440	80	47.3	46.7	52.0	37.5	57.5	28.0	44.6	44.6	49.0	36.0	54.2	26.5	41.8	41.8	45.8	34.5	50.7	25.0
1440	85	49.5	49.5	52.4	45.3	57.7	35.8	47.1	47.1	49.4	43.8	54.4	34.3	44.5	44.5	46.3	42.3	50.9	32.8
1440	90	52.4	52.4	53.2	52.9	58.0	43.6	49.9	49.9	50.3	50.3	54.7	42.1	47.2	47.2	47.3	47.3	51.2	40.5
1600	75	47.5	41.6	52.6	31.2	58.1	20.6	44.6	40.1	49.4	29.7	54.7	19.0	41.6	38.1	46.1	28.1	51.0	17.5
1600	80	48.5	48.5	52.9	39.8	58.3	29.2	45.8	45.8	49.8	38.3	54.9	27.7	43.2	43.2	46.5	36.7	51.3	26.2
1600	85	51.4	51.4	53.4	48.5	58.5	37.9	48.8	48.8	50.3	46.7	55.1	36.4	46.0	46.0	47.1	45.0	51.5	34.8
1600	90	54.4	54.4	54.6	54.6	58.9	46.6	51.7	51.7	51.8	51.8	55.6	45.1	48.9	48.9	49.0	49.0	52.0	43.5
1720	75	48.3	44.1	53.2	32.6	58.8	20.9	45.4	42.2	50.0	31.0	55.2	19.4	42.3	40.4	46.6	29.4	51.4	17.8
1720	80	49.8	49.8	53.6	42.1	59.0	30.5	47.2	47.2	50.4	40.6	55.5	28.9	44.4	44.4	47.0	39.0	51.7	27.3
1720	85	53.0	53.0	54.4	51.4	59.3	40.0	50.2	50.2	51.3	49.7	55.8	38.4	47.4	47.4	48.0	48.0	52.1	36.9
1720	90	56.1	56.1	56.2	56.2	59.8	49.6	53.3	53.3	53.4	53.4	56.3	48.0	50.3	50.3	50.4	50.4	52.7	46.4
1920	75	49.0	46.2	53.7	34.0	59.3	21.3	46.1	44.5	50.4	32.4	55.6	19.7	42.9	42.8	46.9	30.8	51.8	18.1
1920	80	51.1	51.1	54.3	44.4	59.5	31.7	48.4	48.4	51.0	42.8	55.9	30.1	45.5	45.5	47.5	41.2	52.1	28.5
1920	85	54.4	54.4	55.3	54.4	59.9	42.1	51.5	51.5	52.1	52.1	56.3	40.5	48.5	48.5	48.7	48.7	52.5	38.9
1920	90	57.6	57.6	57.7	57.7	60.5	52.5	54.7	54.7	54.8	54.8	57.0	51.0	51.5	51.5	51.6	51.6	53.2	48.9

		Ambient Temperature (°F)						Ambient Temperature (°F)					
		115						125					
	Ent	Entering Wet Bulb (°F)						Entering Wet Bulb (°F)					
	DB	61		67		73		61		67		73	
cfm	(°F)	MBh	SHC	MBh	SHC	MBh	SHC	MBh	SHC	MBh	SHC	MBh	SHC
1280	75	37.0	31.9	41.5	23.7	46.1	15.4	33.9	30.2	38.0	22.0	42.2	13.6
1280	80	37.8	37.8	41.7	30.6	46.4	22.2	34.9	34.9	38.2	28.9	42.5	20.6
1280	85	40.1	40.1	42.1	37.5	46.6	29.1	37.3	37.3	38.6	35.5	42.7	27.5
1280	90	42.6	42.6	42.9	42.9	46.8	36.0	39.7	39.7	39.8	39.8	43.0	34.4
1440	75	37.8	34.0	42.1	25.1	46.7	15.6	34.5	32.3	38.5	23.4	42.7	13.9
1440	80	39.1	39.1	42.4	32.8	47.0	23.4	36.2	36.2	38.8	31.1	43.0	21.7
1440	85	41.7	41.7	42.9	40.3	47.2	31.2	38.7	38.7	39.4	38.5	43.2	29.5
1440	90	44.4	44.4	44.5	44.5	47.6	39.0	41.3	41.3	41.3	41.3	43.6	37.3
1600	75	38.5	36.4	42.6	26.4	47.2	15.9	35.2	34.5	38.9	24.7	43.0	14.2
1600	80	40.4	40.4	43.0	35.1	47.5	24.5	37.3	37.3	39.3	33.3	43.4	22.8
1600	85	43.1	43.1	43.8	43.3	47.7	33.2	39.9	39.9	40.2	40.2	43.7	31.5
1600	90	45.9	45.9	45.9	45.9	48.2	41.9	42.6	42.6	42.6	42.6	44.2	40.2
1720	75	39.1	38.7	43.0	27.8	47.5	16.2	35.7	35.7	39.2	26.0	43.3	14.4
1720	80	41.4	41.4	43.5	37.3	47.8	25.7	38.2	38.2	39.7	35.1	43.6	24.0
1720	85	44.3	44.3	44.5	44.5	48.2	35.2	41.0	41.0	41.0	41.0	44.0	33.5
1720	90	47.1	47.1	47.2	47.2	48.8	44.8	43.6	43.6	43.7	43.7	44.7	42.4
1920	75	39.7	39.7	43.3	29.1	47.8	16.4	36.2	36.2	39.4	27.3	43.5	14.7
1920	80	42.4	42.4	43.9	39.0	48.1	26.8	39.0	39.0	40.1	37.1	43.8	25.1
1920	85	45.3	45.3	45.4	45.4	48.6	37.3	41.8	41.8	41.9	41.9	44.3	35.5
1920	90	48.2	48.2	48.3	48.3	49.4	47.1	44.5	44.5	44.6	44.6	45.2	45.2

Notes:

1. All capacities shown are gross and have not considered indoor fan heat. To obtain **NET** cooling capacity subtract indoor fan heat. For indoor fan heat formula, refer to appropriate airflow table notes.
2. MBh = Total Gross Capacity
3. SHC = Sensible Heat Capacity

Table 12. Gross cooling capacities 5 tons standard efficiency - three phase WSC060H3,4,W

		Ambient Temperature (°F)						Ambient Temperature (°F)						Ambient Temperature (°F)					
		85						95						105					
	Ent	Entering Wet Bulb (°F)						Entering Wet Bulb (°F)						Entering Wet Bulb (°F)					
	DB	61		67		73		61		67		73		61		67		73	
cfm	(°F)	MBh	SHC	MBh	SHC	MBh	SHC	MBh	SHC	MBh	SHC	MBh	SHC	MBh	SHC	MBh	SHC	MBh	SHC
1600	75	56.3	46.5	63.0	35.9	70.1	24.9	52.8	44.7	59.1	34.1	65.7	23.1	49.0	42.7	54.9	32.2	61.2	21.2
1600	80	56.6	55.4	63.1	44.8	70.2	33.9	53.1	53.1	59.2	43.0	65.9	32.1	49.4	49.4	55.1	41.1	61.3	30.2
1600	85	58.0	58.0	63.3	53.7	70.3	42.9	55.0	55.0	59.4	51.9	66.0	41.1	51.9	51.9	55.3	50.0	61.5	39.2
1600	90	61.3	61.3	63.5	62.6	70.4	51.8	58.3	58.3	59.8	59.8	66.2	50.0	55.0	55.0	55.8	55.8	61.7	48.1
1800	75	57.5	49.7	64.2	37.8	71.3	25.4	53.7	47.8	60.0	35.9	66.7	23.5	49.8	45.8	55.7	33.9	61.9	21.6
1800	80	58.0	58.0	64.3	47.8	71.4	35.5	54.4	54.4	60.2	45.9	66.9	33.7	50.6	50.6	55.9	43.9	62.1	31.7
1800	85	60.5	60.5	64.5	57.8	71.5	45.6	57.3	57.3	60.5	55.9	67.1	43.8	53.9	53.9	56.2	54.0	62.3	41.8
1800	90	64.0	64.0	65.1	65.1	71.7	55.6	60.7	60.7	61.3	61.3	67.3	53.8	57.2	57.2	57.2	57.2	62.5	51.9
2000	75	58.4	52.9	65.1	39.6	72.2	25.9	54.5	50.9	60.8	37.6	67.5	24.0	50.5	48.6	56.3	35.6	62.5	22.0
2000	80	59.3	59.3	65.3	50.7	72.4	37.1	55.6	55.6	61.0	48.8	67.7	35.2	52.2	52.2	56.5	46.7	62.7	33.2
2000	85	62.6	62.6	65.6	61.8	72.5	48.3	59.2	59.2	61.4	59.9	67.9	46.4	55.6	55.6	57.0	57.0	62.9	44.4
2000	90	66.3	66.3	66.6	66.6	72.7	59.5	62.8	62.8	62.8	62.8	68.1	57.6	59.0	59.0	59.1	59.1	63.2	55.6
2200	75	59.2	56.0	65.9	41.4	73.0	26.3	55.2	54.0	61.4	39.3	68.1	24.3	51.0	51.0	56.7	37.3	63.0	22.3
2200	80	60.6	60.6	66.1	53.6	73.2	38.7	57.2	57.2	61.7	51.6	68.3	36.7	53.5	53.5	57.0	49.5	63.2	34.7
2200	85	64.5	64.5	66.5	65.9	73.4	51.0	60.9	60.9	62.3	62.3	68.6	49.0	57.1	57.1	57.8	57.8	63.4	47.0
2200	90	68.3	68.3	68.2	68.2	73.6	63.3	64.6	64.6	64.7	64.7	68.8	61.3	60.6	60.6	60.7	60.7	63.8	59.3
2400	75	59.9	59.2	66.5	43.1	73.7	26.8	55.8	55.8	61.9	41.1	68.6	24.7	51.5	51.5	57.1	38.9	63.4	22.6
2400	80	62.2	62.2	66.8	56.5	73.9	40.3	58.5	58.5	62.2	54.5	68.8	38.2	54.6	54.6	57.4	52.3	63.6	36.1
2400	85	66.2	66.2	67.4	67.4	74.1	53.7	62.4	62.4	63.1	63.1	69.1	51.7	58.3	58.3	58.5	58.5	63.8	49.6
2400	90	70.1	70.1	70.2	70.2	74.3	67.1	66.2	66.2	66.3	66.3	69.5	65.1	62.0	62.0	62.1	62.1	64.3	63.1

		Ambient Temperature (°F)						Ambient Temperature (°F)					
		115						125					
	Ent	Entering Wet Bulb (°F)						Entering Wet Bulb (°F)					
	DB	61		67		73		61		67		73	
cfm	(°F)	MBh	SHC	MBh	SHC	MBh	SHC	MBh	SHC	MBh	SHC	MBh	SHC
1600	75	45.0	40.7	50.5	30.2	56.3	19.3	40.8	38.7	45.8	28.1	51.1	17.2
1600	80	45.6	45.6	50.7	39.1	56.5	28.3	41.9	41.9	46.0	37.0	51.3	26.2
1600	85	48.5	48.5	51.0	48.0	56.7	37.3	44.8	44.8	46.3	46.0	51.5	35.2
1600	90	51.5	51.5	51.7	51.7	56.8	46.2	47.7	47.7	47.8	47.8	51.7	44.2
1800	75	45.6	43.8	51.1	31.8	56.9	19.6	41.2	41.2	46.2	29.7	51.5	17.5
1800	80	47.1	47.1	51.3	41.9	57.1	29.7	43.3	43.3	46.4	39.8	51.7	27.6
1800	85	50.3	50.3	51.7	51.7	57.3	39.8	46.3	46.3	47.0	47.0	51.9	37.7
1800	90	53.4	53.4	53.5	53.5	57.5	49.9	49.3	49.3	49.4	49.4	52.2	47.8
2000	75	46.1	46.1	51.5	33.5	57.3	19.9	41.7	41.7	46.5	31.3	51.7	17.7
2000	80	48.4	48.4	51.8	44.7	57.5	31.2	44.4	44.4	46.7	42.5	51.9	29.0
2000	85	51.7	51.7	52.5	52.5	57.7	42.4	47.5	47.5	47.7	47.7	52.2	40.2
2000	90	55.0	55.0	55.1	55.1	58.0	53.6	50.7	50.7	50.7	50.7	52.6	51.4
2200	75	46.7	46.7	51.8	35.1	57.6	20.2	42.1	42.1	46.6	32.9	51.8	18.0
2200	80	49.5	49.5	52.1	47.4	57.8	32.6	45.3	45.3	47.0	45.2	52.1	30.4
2200	85	53.0	53.0	53.2	53.2	58.1	44.9	48.5	48.5	48.6	48.6	52.3	42.7
2200	90	56.4	56.4	56.5	56.5	58.5	57.3	51.8	51.8	51.8	51.8	52.9	52.9
2400	75	47.1	47.1	52.0	36.7	57.8	20.5	42.5	42.5	46.7	34.5	51.9	18.2
2400	80	50.5	50.5	52.4	50.2	58.1	34.0	46.0	46.0	47.2	47.2	52.2	31.7
2400	85	54.0	54.0	53.9	53.9	58.3	47.4	49.4	49.4	49.4	49.4	52.4	45.2
2400	90	57.5	57.5	57.6	57.6	59.0	59.0	52.7	52.7	52.7	52.7	53.3	53.3

Notes:

1. All capacities shown are gross and have not considered indoor fan heat. To obtain **NET** cooling capacity subtract indoor fan heat. For indoor fan heat formula, refer to appropriate airflow table notes.
2. MBh = Total Gross Capacity
3. SHC = Sensible Heat Capacity

Gross Cooling Capacities

Table 13. Gross cooling capacities 7.5 tons standard efficiency - three phase WSC092H3,4,W

		Ambient Temperature (°F)						Ambient Temperature (°F)						Ambient Temperature (°F)					
		85						95						105					
	Ent	Entering Wet Bulb (°F)						Entering Wet Bulb (°F)						Entering Wet Bulb (°F)					
	DB	61		67		73		61		67		73		61		67		73	
cfm	(°F)	MBh	SHC	MBh	SHC	MBh	SHC	MBh	SHC	MBh	SHC	MBh	SHC	MBh	SHC	MBh	SHC	MBh	SHC
2400	75	87.1	70.9	97.1	55.2	107.9	39.0	82.3	68.1	91.7	52.8	101.8	36.6	77.2	65.5	86.0	50.3	95.4	34.1
2400	80	88.0	83.4	97.4	68.3	108.1	52.2	83.3	81.0	92.0	65.9	102.1	49.8	78.4	78.4	86.4	63.4	95.8	47.3
2400	85	91.3	91.3	97.8	81.4	108.4	65.3	87.2	87.2	92.5	78.5	102.4	62.9	82.8	82.8	86.9	75.9	96.1	60.4
2400	90	96.5	96.5	98.8	93.9	108.6	78.4	92.3	92.2	93.6	91.4	102.7	76.0	87.7	87.7	88.2	88.2	96.4	73.5
2700	75	89.2	75.2	99.1	58.0	109.8	39.8	84.2	72.7	93.4	55.5	103.5	37.3	78.8	70.0	87.5	53.0	96.8	34.8
2700	80	90.5	89.8	99.4	72.7	110.1	54.6	85.7	85.7	93.8	70.3	103.8	52.1	81.1	81.1	87.9	67.7	97.2	49.6
2700	85	95.3	95.3	100.1	86.9	110.4	69.4	90.9	90.9	94.6	84.3	104.2	66.9	86.2	86.2	88.8	81.6	97.6	64.4
2700	90	100.8	100.8	101.6	101.5	110.8	84.1	96.2	96.2	96.4	96.4	104.6	81.7	91.3	91.3	91.5	91.5	98.1	79.2
3000	75	90.9	79.8	100.7	60.7	111.3	40.5	85.7	77.2	94.8	58.2	104.8	38.0	80.2	74.4	88.7	55.6	97.9	35.4
3000	80	93.0	93.0	101.1	77.1	111.7	57.0	88.5	88.5	95.3	74.6	105.2	54.5	83.7	83.7	89.2	71.3	98.4	51.9
3000	85	98.7	98.7	102.1	92.7	112.1	73.4	94.1	94.1	96.4	90.1	105.6	70.9	89.0	89.0	90.4	87.4	98.8	68.3
3000	90	104.5	104.5	104.6	104.6	112.6	89.8	99.6	99.6	99.8	99.8	106.3	86.6	94.4	94.4	94.5	94.5	99.6	83.9
3300	75	92.4	84.3	102.0	63.4	112.6	41.2	87.1	81.6	96.0	60.9	105.9	38.6	81.5	78.8	89.6	58.2	98.8	36.0
3300	80	95.8	95.8	102.5	81.4	113.1	59.3	91.1	91.1	96.6	78.1	106.4	56.8	86.0	86.0	90.3	75.3	99.4	54.2
3300	85	101.8	101.8	103.8	98.5	113.5	77.3	96.8	96.8	98.0	95.8	106.8	74.8	91.5	91.5	92.0	92.0	99.9	72.2
3300	90	107.7	107.7	107.9	107.9	114.2	94.6	102.6	102.6	102.7	102.7	107.7	91.9	97.0	97.0	97.2	97.2	100.8	89.2
3600	75	93.8	88.8	103.1	66.1	113.7	41.8	88.4	86.0	96.9	63.5	106.8	39.3	82.7	82.7	90.4	60.8	99.5	36.6
3600	80	98.3	98.3	103.8	84.9	114.2	61.6	93.3	93.3	97.7	82.2	107.4	59.1	88.0	88.0	91.3	79.3	100.2	56.4
3600	85	104.4	104.4	105.5	104.3	114.6	81.3	99.2	99.2	99.6	99.6	107.8	78.8	93.7	93.7	93.7	93.7	100.7	76.1
3600	90	110.6	110.6	110.7	110.7	115.6	99.9	105.1	105.1	105.3	105.3	108.9	97.2	99.3	99.3	99.5	99.5	101.9	94.4

		Ambient Temperature (°F)						Ambient Temperature (°F)					
		115						125					
	Ent	Entering Wet Bulb (°F)						Entering Wet Bulb (°F)					
	DB	61		67		73		61		67		73	
cfm	(°F)	MBh	SHC	MBh	SHC	MBh	SHC	MBh	SHC	MBh	SHC	MBh	SHC
2400	75	71.8	62.7	80.0	47.7	88.7	31.5	66.2	59.9	73.6	44.9	81.4	28.8
2400	80	73.5	73.5	80.4	60.8	89.1	44.7	68.6	68.6	74.0	58.0	81.9	42.0
2400	85	78.1	78.1	81.0	73.2	89.4	57.9	73.0	73.0	74.8	70.3	82.3	55.1
2400	90	82.8	82.8	83.0	83.0	89.8	71.0	77.5	77.5	77.7	77.7	82.7	67.6
2700	75	73.3	67.2	81.2	50.3	89.8	32.1	67.4	64.2	74.6	47.5	82.4	29.4
2700	80	76.2	76.2	81.7	64.5	90.3	47.0	71.0	71.0	75.1	61.5	82.9	44.2
2700	85	81.1	81.1	82.7	78.9	90.7	61.8	75.7	75.7	76.3	76.0	83.3	59.0
2700	90	86.1	86.1	86.2	86.2	91.3	75.8	80.4	80.4	80.5	80.5	84.0	72.8
3000	75	74.5	71.5	82.2	52.9	90.7	32.7	68.5	68.5	75.3	50.1	83.0	29.9
3000	80	78.6	78.6	82.8	68.4	91.3	49.2	73.0	73.0	76.0	65.4	83.6	46.4
3000	85	83.7	83.7	84.3	84.3	91.7	65.7	77.9	77.9	78.0	78.0	84.1	62.9
3000	90	88.8	88.8	88.9	88.9	92.5	81.0	82.7	82.7	82.8	82.8	85.0	78.0
3300	75	75.7	75.7	82.9	55.5	91.4	33.3	69.7	69.7	75.9	52.6	83.6	30.5
3300	80	80.6	80.6	83.8	72.4	92.1	51.5	74.8	74.8	76.8	69.3	84.2	48.6
3300	85	85.9	85.9	85.9	85.9	92.6	69.5	79.7	79.7	79.8	79.8	84.8	65.6
3300	90	91.1	91.1	91.3	91.3	93.6	86.3	84.7	84.7	84.8	84.8	86.0	83.2
3600	75	76.9	76.9	83.6	58.0	92.0	33.9	71.1	71.1	76.3	55.1	84.0	31.0
3600	80	82.3	82.3	84.6	76.3	92.7	53.7	76.2	76.2	77.5	73.2	84.7	50.8
3600	85	87.7	87.7	87.9	87.9	93.3	72.3	81.3	81.3	81.4	81.4	85.4	69.1
3600	90	93.1	93.1	93.2	93.2	94.6	91.5	86.4	86.4	86.5	86.5	86.9	86.9

Notes:

1. All capacities shown are gross and have not considered indoor fan heat. To obtain **NET** cooling capacity subtract indoor fan heat. For indoor fan heat formula, refer to appropriate airflow table notes.
2. MBh = Total Gross Capacity
3. SHC = Sensible Heat Capacity

Table 14. Gross cooling capacities 8.5 tons standard efficiency - three phase WSC102H3,4,W

		Ambient Temperature (°F)						Ambient Temperature (°F)						Ambient Temperature (°F)					
		85						95						105					
	Ent	Entering Wet Bulb (°F)						Entering Wet Bulb (°F)						Entering Wet Bulb (°F)					
	DB	61		67		73		61		67		73		61		67		73	
cfm	(°F)	MBh	SHC	MBh	SHC	MBh	SHC	MBh	SHC	MBh	SHC	MBh	SHC	MBh	SHC	MBh	SHC	MBh	SHC
2720	75	94.0	78.7	104.8	60.7	116.6	42.1	89.2	76.4	99.5	58.3	110.6	39.7	84.1	73.8	93.9	55.8	104.2	37.2
2720	80	94.4	92.8	105.2	75.8	116.8	57.3	89.8	89.8	99.8	73.4	110.8	54.9	85.0	85.0	94.2	70.9	104.5	52.4
2720	85	97.5	97.5	105.4	90.8	117.1	72.4	93.5	93.5	100.1	88.4	111.1	70.0	89.2	89.2	94.5	85.9	104.9	67.6
2720	90	103.0	103.0	106.0	104.8	117.4	87.6	98.8	98.8	100.9	100.9	111.4	85.2	94.4	94.4	95.5	95.5	105.2	82.7
3060	75	96.0	84.3	106.9	63.9	118.7	43.0	90.9	81.8	101.3	61.4	112.4	40.5	85.7	79.2	95.4	58.9	105.7	37.9
3060	80	96.9	96.9	107.3	80.9	118.9	60.1	92.1	92.1	101.7	78.4	112.6	57.6	87.2	87.2	95.8	75.9	106.1	55.0
3060	85	101.6	101.6	107.6	97.8	119.3	77.1	97.3	97.3	102.1	95.3	113.1	74.7	92.7	92.7	96.3	91.5	106.5	72.1
3060	90	107.4	107.4	108.7	108.7	119.6	94.1	102.9	102.9	103.5	103.5	113.4	91.7	98.1	98.1	98.1	98.1	106.9	89.1
3400	75	97.6	89.7	108.6	67.1	120.4	43.8	92.3	85.9	102.8	64.5	113.8	41.3	87.0	83.2	96.7	61.9	106.9	38.6
3400	80	99.2	99.2	109.0	85.9	120.7	62.8	94.5	94.5	103.2	83.4	114.2	60.3	90.0	90.0	97.2	80.8	107.4	57.7
3400	85	105.1	105.1	109.4	103.4	121.1	81.8	100.5	100.5	103.8	100.7	114.6	79.3	95.6	95.6	97.8	97.8	107.9	76.7
3400	90	111.2	111.2	111.3	111.3	121.5	100.7	106.4	106.4	106.3	106.3	115.0	98.2	101.3	101.3	101.5	101.5	108.3	95.5
3740	75	99.0	93.7	110.1	70.2	121.8	44.6	93.7	91.0	104.0	67.6	115.0	42.0	88.1	88.1	97.7	64.9	107.9	39.3
3740	80	101.7	101.7	110.5	91.0	122.2	65.6	97.3	97.3	104.5	88.3	115.5	63.0	92.3	92.3	98.2	85.7	108.5	60.3
3740	85	108.2	108.2	111.1	110.0	122.6	86.4	103.3	103.3	105.3	105.3	116.0	83.8	98.2	98.2	99.3	99.3	109.0	81.2
3740	90	114.5	114.5	114.7	114.7	123.0	107.2	109.4	109.4	109.6	109.6	116.4	104.6	104.1	104.1	104.2	104.2	109.4	101.9
4080	75	100.3	98.8	111.3	73.3	122.9	45.4	94.9	94.9	105.1	70.6	115.9	42.7	89.2	89.2	98.6	67.9	108.6	40.0
4080	80	104.5	104.5	111.8	95.9	123.4	68.3	99.5	99.5	105.6	93.3	116.5	65.6	94.3	94.3	99.1	90.5	109.4	62.9
4080	85	110.9	110.9	112.7	112.7	123.9	91.0	105.8	105.8	106.8	106.8	117.1	88.4	100.4	100.4	100.7	100.7	109.9	85.7
4080	90	117.4	117.4	117.6	117.6	124.3	113.7	112.1	112.1	112.2	112.2	117.5	109.0	106.4	106.4	106.6	106.6	110.4	106.1

		Ambient Temperature (°F)						Ambient Temperature (°F)					
		115						125					
	Ent	Entering Wet Bulb (°F)						Entering Wet Bulb (°F)					
	DB	61		67		73		61		67		73	
cfm	(°F)	MBh	SHC	MBh	SHC	MBh	SHC	MBh	SHC	MBh	SHC	MBh	SHC
2720	75	78.8	71.2	87.9	53.2	97.5	34.6	73.1	67.4	81.6	50.5	90.3	31.8
2720	80	79.9	79.9	88.3	68.3	97.9	49.8	74.9	74.9	82.0	65.6	90.8	47.1
2720	85	84.6	84.6	88.7	82.2	98.3	65.0	79.7	79.7	82.5	79.3	91.2	62.3
2720	90	89.7	89.7	90.0	90.0	98.6	80.1	84.5	84.5	84.6	84.6	91.6	77.4
3060	75	80.1	75.3	89.3	56.2	98.8	35.3	74.3	72.4	82.7	53.4	91.3	32.5
3060	80	82.5	82.5	89.7	73.2	99.2	52.4	77.4	77.4	83.1	70.4	91.9	49.6
3060	85	87.8	87.8	90.3	88.7	99.7	69.5	82.5	82.5	83.9	83.9	92.3	66.7
3060	90	93.0	93.0	93.2	93.2	100.0	86.5	87.5	87.5	87.6	87.6	92.7	83.7
3400	75	81.3	80.3	90.3	59.2	99.7	35.9	75.3	75.3	83.5	56.3	92.0	33.1
3400	80	85.0	85.0	90.8	78.1	100.3	55.0	79.6	79.6	84.0	75.2	92.7	52.2
3400	85	90.4	90.4	91.7	91.7	100.8	74.0	84.8	84.8	85.2	85.2	93.2	71.1
3400	90	95.9	95.9	96.0	96.0	101.2	92.9	90.0	90.0	90.1	90.1	93.7	88.1
3740	75	82.4	82.4	91.2	62.1	100.4	36.6	76.3	76.3	84.1	59.2	92.6	33.7
3740	80	87.0	87.0	91.6	82.9	101.2	57.6	81.4	81.4	84.6	78.1	93.4	54.7
3740	85	92.7	92.7	93.0	93.0	101.7	78.4	86.7	86.7	86.6	86.6	93.9	75.6
3740	90	98.3	98.3	98.4	98.4	102.2	97.1	92.1	92.1	92.1	92.1	94.5	94.0
4080	75	83.3	83.3	91.8	65.0	101.1	37.2	77.2	77.2	84.6	62.1	93.0	34.3
4080	80	88.8	88.8	92.4	85.7	101.9	60.1	82.9	82.9	85.2	82.5	93.9	57.2
4080	85	94.6	94.6	94.4	94.4	102.4	82.9	88.4	88.4	88.5	88.5	94.4	79.9
4080	90	100.4	100.4	100.5	100.5	103.1	103.1	93.8	93.8	93.9	93.9	95.3	95.3

Notes:

1. All capacities shown are gross and have not considered indoor fan heat. To obtain **NET** cooling capacity subtract indoor fan heat. For indoor fan heat formula, refer to appropriate airflow table notes.
2. MBh = Total Gross Capacity
3. SHC = Sensible Heat Capacity

Gross Cooling Capacities

Table 15. Gross cooling capacities 10 tons standard efficiency - three phase WSC120H3,4,W

		Ambient Temperature (°F)						Ambient Temperature (°F)						Ambient Temperature (°F)					
		85						95						105					
	Ent	Entering Wet Bulb (°F)						Entering Wet Bulb (°F)						Entering Wet Bulb (°F)					
	DB	61		67		73		61		67		73		61		67		73	
cfm	(°F)	MBh	SHC	MBh	SHC	MBh	SHC	MBh	SHC	MBh	SHC	MBh	SHC	MBh	SHC	MBh	SHC	MBh	SHC
3200	75	109.4	92.2	121.1	70.6	133.2	48.3	103.1	89.2	114.2	67.6	125.6	45.3	96.4	85.9	106.7	64.4	117.3	42.2
3200	80	110.5	108.9	121.4	88.4	133.6	66.2	104.6	104.6	114.6	85.4	126.0	63.2	98.2	98.2	107.1	82.1	117.9	60.1
3200	85	115.3	115.3	121.9	106.0	134.0	84.0	110.0	110.0	115.1	102.0	126.5	81.0	104.1	104.1	107.8	98.7	118.3	77.9
3200	90	121.6	121.6	123.2	122.6	134.3	101.7	116.0	116.0	116.7	116.7	126.8	98.8	109.9	109.9	110.0	110.0	118.7	95.7
3600	75	111.6	98.7	123.2	74.3	135.2	49.2	105.1	94.4	116.1	71.3	127.3	46.2	98.2	90.9	108.3	68.0	118.7	43.0
3600	80	113.5	113.5	123.6	94.3	135.7	69.3	107.6	107.6	116.5	91.2	127.9	66.4	101.6	101.6	108.8	87.9	119.4	63.2
3600	85	119.8	119.8	124.3	113.0	136.2	89.4	114.1	114.1	117.4	109.7	128.4	86.4	107.8	107.8	109.9	106.3	119.9	83.2
3600	90	126.3	126.3	126.5	126.5	136.5	109.3	120.4	120.4	120.6	120.6	128.8	106.4	113.9	113.9	114.0	114.0	120.5	103.2
4000	75	113.5	103.7	124.9	78.0	136.8	50.1	106.9	100.3	117.6	74.8	128.7	47.1	99.8	96.7	109.6	71.5	119.9	43.8
4000	80	116.8	116.8	125.4	100.1	137.4	72.5	111.0	111.0	118.1	97.0	129.4	69.5	104.5	104.5	110.1	93.7	120.7	66.2
4000	85	123.6	123.6	126.5	120.7	137.9	94.7	117.5	117.5	119.4	117.4	129.9	91.7	110.9	110.9	111.7	111.7	121.2	88.5
4000	90	130.3	130.3	130.5	130.5	138.4	116.9	124.1	124.1	124.2	124.2	130.5	113.9	117.2	117.2	117.3	117.3	121.9	108.9
4400	75	115.2	109.7	126.4	81.6	138.1	51.0	108.4	106.2	118.8	78.4	129.8	47.9	101.2	101.2	110.6	75.0	120.8	44.6
4400	80	119.9	119.9	126.9	105.9	138.9	75.6	113.7	113.7	119.4	102.8	130.6	72.6	107.0	107.0	111.3	97.5	121.7	69.3
4400	85	126.8	126.8	128.4	128.4	139.4	100.1	120.5	120.5	121.2	121.2	131.2	97.0	113.5	113.5	113.6	113.6	122.3	93.8
4400	90	133.8	133.8	134.0	134.0	140.0	122.7	127.2	127.2	127.4	127.4	132.0	119.5	120.0	120.0	120.1	120.1	123.3	115.9
4800	75	116.7	115.6	127.6	85.1	139.3	51.9	109.9	109.9	119.8	81.9	130.7	48.8	102.5	102.5	111.5	78.5	121.5	45.4
4800	80	122.5	122.5	128.2	110.0	140.1	78.7	116.1	116.1	120.5	106.5	131.7	75.6	109.1	109.1	112.3	102.8	122.6	72.3
4800	85	129.7	129.7	130.3	130.3	140.6	105.4	123.0	123.0	123.1	123.1	132.2	102.3	115.8	115.8	115.9	115.9	123.1	99.0
4800	90	136.8	136.8	137.0	137.0	141.5	129.9	129.9	129.9	130.1	130.1	133.3	126.5	122.4	122.4	122.5	122.5	124.5	122.9

		Ambient Temperature (°F)						Ambient Temperature (°F)					
		115						125					
	Ent	Entering Wet Bulb (°F)						Entering Wet Bulb (°F)					
	DB	61		67		73		61		67		73	
cfm	(°F)	MBh	SHC	MBh	SHC	MBh	SHC	MBh	SHC	MBh	SHC	MBh	SHC
3200	75	89.4	81.4	98.9	61.1	108.5	38.9	82.3	77.8	90.7	57.7	99.2	35.5
3200	80	92.2	92.2	99.3	78.8	109.2	56.9	85.8	85.8	91.1	75.4	100.0	53.5
3200	85	97.8	97.8	100.2	95.2	109.7	74.7	91.1	91.1	92.2	91.5	100.5	71.3
3200	90	103.4	103.4	103.6	103.6	110.1	92.4	96.3	96.3	96.5	96.5	101.0	87.6
3600	75	91.0	87.2	100.2	64.6	109.6	39.7	83.6	83.5	91.7	61.2	100.1	36.3
3600	80	95.2	95.2	100.7	84.6	110.5	59.9	88.4	88.4	92.3	79.5	101.0	56.5
3600	85	101.1	101.1	102.0	102.0	111.0	79.9	93.9	93.9	94.0	94.0	101.5	76.5
3600	90	106.9	106.9	107.0	107.0	111.6	98.3	99.3	99.3	99.4	99.4	102.3	94.5
4000	75	92.4	92.4	101.2	68.1	110.5	40.5	85.0	85.0	92.5	64.6	100.7	37.0
4000	80	97.7	97.7	101.9	88.5	111.5	62.9	90.5	90.5	93.2	84.7	101.7	59.4
4000	85	103.8	103.8	103.9	103.9	112.0	85.2	96.2	96.2	96.3	96.3	102.3	81.7
4000	90	109.7	109.7	109.9	109.9	112.9	105.2	101.7	101.7	101.8	101.8	103.4	101.4
4400	75	93.8	93.8	102.0	71.5	111.3	41.2	86.5	86.5	93.1	68.0	101.2	37.7
4400	80	99.9	99.9	102.9	93.7	112.3	65.9	92.3	92.3	94.1	89.8	102.3	62.4
4400	85	106.1	106.1	106.2	106.2	112.9	90.4	98.0	98.0	98.1	98.1	102.9	84.5
4400	90	112.2	112.2	112.3	112.3	114.1	112.2	103.7	103.7	103.8	103.8	104.4	104.4
4800	75	95.2	95.2	102.7	75.0	111.8	42.0	87.9	87.9	93.5	71.3	101.6	38.4
4800	80	101.7	101.7	103.7	98.9	112.9	68.9	93.8	93.8	94.8	94.8	102.8	65.3
4800	85	108.0	108.0	108.1	108.1	113.5	93.2	99.6	99.6	99.7	99.7	103.5	89.1
4800	90	114.2	114.2	114.3	114.3	115.2	115.2	105.4	105.4	105.5	105.5	105.5	105.5

Notes:

1. All capacities shown are gross and have not considered indoor fan heat. To obtain **NET** cooling capacity subtract indoor fan heat. For indoor fan heat formula, refer to appropriate airflow table notes.
2. MBh = Total Gross Capacity
3. SHC = Sensible Heat Capacity

Table 16. Gross cooling capacities 3 tons - high efficiency high stage - three phase W/DHC036H3,4,W

		Ambient Temperature (°F)						Ambient Temperature (°F)						Ambient Temperature (°F)					
		85						95						105					
	Ent	Entering Wet Bulb (°F)						Entering Wet Bulb (°F)						Entering Wet Bulb (°F)					
	DB	61		67		73		61		67		73		61		67		73	
cfm	(°F)	MBh	SHC	MBh	SHC	MBh	SHC	MBh	SHC	MBh	SHC	MBh	SHC	MBh	SHC	MBh	SHC	MBh	SHC
960	75	33.4	26.8	37.6	20.7	42.1	14.4	31.0	25.4	35.1	19.4	39.3	13.1	28.6	24.0	32.4	18.0	36.4	11.7
960	80	33.5	31.8	37.7	25.9	42.2	19.7	31.2	30.4	35.2	24.6	39.4	18.3	28.8	28.8	32.6	23.2	36.5	17.0
960	85	34.5	34.5	37.8	31.1	42.3	24.9	32.6	32.6	35.3	29.8	39.6	23.6	30.5	30.5	32.6	28.4	36.7	22.2
960	90	36.6	36.6	37.9	36.1	42.4	30.2	34.7	34.7	35.5	34.7	39.7	28.8	32.5	32.5	32.9	32.9	36.8	27.4
1080	75	34.1	28.7	38.4	21.8	42.8	14.7	31.7	27.3	35.7	20.4	39.9	13.3	29.1	25.6	33.0	19.0	36.9	11.9
1080	80	34.4	34.3	38.5	27.7	43.0	20.6	32.0	32.0	35.9	26.3	40.1	19.3	29.8	29.8	33.1	24.9	37.1	17.9
1080	85	36.2	36.2	38.6	33.5	43.1	26.6	34.1	34.1	36.0	31.9	40.3	25.2	31.9	31.9	33.3	30.5	37.3	23.8
1080	90	38.4	38.4	38.9	38.9	43.2	32.4	36.3	36.3	36.4	36.4	40.4	31.1	34.0	34.0	34.1	34.1	37.4	29.6
1200	75	34.7	30.4	39.0	22.9	43.5	15.0	32.2	28.9	36.2	21.5	40.4	13.6	29.6	27.4	33.4	20.0	37.3	12.1
1200	80	35.2	35.2	39.1	29.4	43.6	21.6	33.1	33.1	36.4	28.0	40.6	20.2	30.8	30.8	33.5	26.5	37.5	18.7
1200	85	37.6	37.6	39.3	35.7	43.8	28.2	35.4	35.4	36.6	34.2	40.8	26.8	33.0	33.0	33.8	32.7	37.7	25.3
1200	90	40.0	40.0	40.1	40.1	43.9	34.7	37.7	37.7	37.8	37.8	41.0	33.3	35.3	35.3	35.3	35.3	37.9	31.8
1320	75	35.3	32.1	39.5	24.0	43.9	15.3	32.7	30.6	36.7	22.5	40.8	13.8	30.0	29.1	33.7	21.0	37.6	12.3
1320	80	36.4	36.4	39.7	31.2	44.2	22.5	34.1	34.1	36.8	29.7	41.1	21.1	31.7	31.7	33.9	28.2	37.8	19.6
1320	85	38.9	38.9	40.0	38.0	44.4	29.8	36.5	36.5	37.2	36.5	41.3	28.3	34.0	34.0	34.3	34.3	38.0	26.8
1320	90	41.3	41.3	41.4	41.4	44.5	36.9	38.9	38.9	39.0	39.0	41.5	35.5	36.4	36.4	36.4	36.4	38.3	33.7
1440	75	35.7	33.9	39.9	25.0	44.4	15.5	33.1	32.4	37.0	23.5	41.2	14.1	30.3	30.3	33.9	22.0	37.8	12.6
1440	80	37.4	37.4	40.1	32.9	44.6	23.5	35.0	35.0	37.2	31.4	41.4	22.0	32.5	32.5	34.2	29.5	38.1	20.5
1440	85	40.0	40.0	40.6	40.3	44.8	31.3	37.5	37.5	37.7	37.7	41.6	29.9	34.9	34.9	34.9	34.9	38.3	28.3
1440	90	42.6	42.6	42.6	42.6	45.0	39.2	40.0	40.0	40.1	40.1	41.9	37.3	37.3	37.3	37.4	37.4	38.6	35.8

		Ambient Temperature (°F)						Ambient Temperature (°F)					
		115						125					
	Ent	Entering Wet Bulb (°F)						Entering Wet Bulb (°F)					
	DB	61		67		73		61		67		73	
cfm	(°F)	MBh	SHC	MBh	SHC	MBh	SHC	MBh	SHC	MBh	SHC	MBh	SHC
960	75	26.1	22.6	29.6	16.5	33.3	10.3	23.4	20.9	26.7	15.1	30.1	8.8
960	80	26.3	26.3	29.8	21.8	33.5	15.5	24.1	24.1	26.8	20.3	30.3	14.1
960	85	28.3	28.3	29.9	26.7	33.7	20.8	26.0	26.0	27.0	25.2	30.4	19.3
960	90	30.3	30.3	30.4	30.4	33.8	26.0	27.9	27.9	27.9	27.9	30.6	24.5
1080	75	26.5	24.1	30.1	17.5	33.7	10.5	23.7	22.5	27.0	16.0	30.4	9.0
1080	80	27.5	27.5	30.2	23.4	33.9	16.4	25.1	25.1	27.2	21.9	30.6	14.9
1080	85	29.5	29.5	30.4	29.0	34.1	22.3	27.0	27.0	27.4	27.4	30.8	20.8
1080	90	31.6	31.6	31.7	31.7	34.2	28.2	29.0	29.0	29.1	29.1	30.9	26.4
1200	75	26.9	25.8	30.4	18.5	34.0	10.7	24.0	24.0	27.2	16.9	30.5	9.1
1200	80	28.4	28.4	30.5	25.0	34.3	17.3	25.8	25.8	27.4	23.1	30.8	15.7
1200	85	30.6	30.6	30.9	30.9	34.5	23.8	27.9	27.9	27.9	27.9	31.0	22.3
1200	90	32.7	32.7	32.8	32.8	34.6	30.0	30.0	30.0	30.0	30.0	31.2	28.4
1320	75	27.2	27.2	30.6	19.5	34.2	10.8	24.3	24.3	27.3	17.9	30.6	9.3
1320	80	29.2	29.2	30.8	26.3	34.5	18.1	26.5	26.5	27.6	24.6	30.9	16.5
1320	85	31.4	31.4	31.5	31.5	34.7	25.3	28.6	28.6	28.7	28.7	31.1	23.7
1320	90	33.7	33.7	33.7	33.7	35.0	32.1	30.7	30.7	30.8	30.8	31.5	30.4
1440	75	27.5	27.5	30.7	20.4	34.4	11.0	24.8	24.8	27.4	18.8	30.7	9.4
1440	80	29.8	29.8	31.0	27.8	34.7	18.9	27.0	27.0	27.7	26.1	31.0	17.3
1440	85	32.2	32.2	32.2	32.2	34.9	26.8	29.2	29.2	29.3	29.3	31.3	24.7
1440	90	34.5	34.5	34.5	34.5	35.3	34.1	31.4	31.4	31.5	31.5	31.7	31.7

Notes:

1. All capacities shown are gross and have not considered indoor fan heat. To obtain **NET** cooling capacity subtract indoor fan heat. For indoor fan heat formula, refer to appropriate airflow table notes.
2. MBh = Total Gross Capacity
3. SHC = Sensible Heat Capacity

Gross Cooling Capacities

Table 17. Gross cooling capacities 3 tons - high efficiency low stage - three phase W/DHC036H3,4,W

		Ambient Temperature (°F)						Ambient Temperature (°F)					
		85						95					
	Ent	Entering Wet Bulb (°F)						Entering Wet Bulb (°F)					
	DB	61		67		73		61		67		73	
cfm	(°F)	MBh	SHC	MBh	SHC	MBh	SHC	MBh	SHC	MBh	SHC	MBh	SHC
600	75	22.7	17.5	25.9	13.7	29.3	9.9	21.0	16.4	24.0	12.7	27.2	8.8
600	80	22.7	20.6	25.9	17.1	29.3	13.2	21.0	19.6	24.1	16.0	27.3	12.2
600	85	22.9	22.9	26.0	20.4	29.4	16.6	21.5	21.5	24.1	19.3	27.4	15.5
600	90	24.4	24.4	25.9	23.5	29.4	19.9	23.0	23.0	24.1	22.5	27.5	18.8
720	75	23.6	19.5	26.9	14.9	30.3	10.2	21.8	18.3	24.9	13.9	28.1	9.2
720	80	23.7	23.2	27.0	18.9	30.4	14.3	21.9	21.9	25.0	17.8	28.2	13.2
720	85	24.8	24.8	27.0	22.9	30.5	18.3	23.3	23.3	25.0	21.7	28.3	17.2
720	90	26.5	26.5	27.1	26.7	30.5	22.3	24.9	24.9	25.1	25.1	28.4	21.2
840	75	24.3	21.3	27.6	16.1	31.0	10.6	22.4	20.1	25.5	15.0	28.7	9.5
840	80	24.7	24.7	27.7	20.7	31.2	15.3	23.0	23.0	25.6	19.6	28.9	14.2
840	85	26.4	26.4	27.8	25.2	31.3	20.0	24.8	24.8	25.7	24.0	29.0	18.8
840	90	28.2	28.2	28.3	28.3	31.3	24.6	26.5	26.5	26.6	26.6	29.1	23.5
960	75	24.9	23.1	28.1	17.2	31.5	10.9	22.8	21.9	25.9	16.0	29.1	9.7
960	80	25.9	25.9	28.3	22.5	31.7	16.2	24.1	24.1	26.0	21.1	29.3	15.1
960	85	27.8	27.8	28.5	27.6	31.9	21.6	26.0	26.0	26.3	26.3	29.5	20.4
960	90	29.7	29.7	29.8	29.8	32.0	26.7	27.8	27.8	27.9	27.9	29.6	25.5

Notes:

1. All capacities shown are gross and have not considered indoor fan heat. To obtain **NET** cooling capacity subtract indoor fan heat. For indoor fan heat formula, refer to appropriate airflow table notes.
2. MBh = Total Gross Capacity
3. SHC = Sensible Heat Capacity

Table 18. Gross cooling capacities 4 tons - high stage - three phase W/DHC048H3,4,W

		Ambient Temperature (°F)						Ambient Temperature (°F)						Ambient Temperature (°F)					
		85						95						105					
	Ent	Entering Wet Bulb (°F)						Entering Wet Bulb (°F)						Entering Wet Bulb (°F)					
	DB	61		67		73		61		67		73		61		67		73	
cfm	(°F)	MBh	SHC	MBh	SHC	MBh	SHC	MBh	SHC	MBh	SHC	MBh	SHC	MBh	SHC	MBh	SHC	MBh	SHC
1280	75	45.0	37.2	50.3	28.7	55.8	19.9	42.1	35.7	47.0	27.2	52.2	18.4	38.9	34.1	43.6	25.6	48.3	16.8
1280	80	45.2	43.9	50.5	35.9	56.0	27.2	42.3	42.3	47.3	34.4	52.4	25.6	39.3	39.3	43.9	32.8	48.6	24.1
1280	85	46.3	46.3	50.7	43.1	56.2	34.4	43.9	43.9	47.5	41.6	52.7	32.9	41.3	41.3	44.1	40.0	48.9	31.3
1280	90	49.1	49.1	50.9	49.6	56.4	41.6	46.6	46.6	47.8	47.8	53.0	40.1	43.9	43.9	44.5	44.5	49.2	38.5
1440	75	45.9	39.8	51.2	30.2	56.7	20.3	42.8	38.2	47.8	28.7	52.9	18.7	39.5	36.6	44.2	27.0	48.8	17.1
1440	80	46.3	46.3	51.5	38.3	57.0	28.4	43.3	43.3	48.1	36.7	53.2	26.9	40.2	40.2	44.5	35.1	49.3	25.3
1440	85	48.4	48.4	51.7	46.4	57.2	36.6	45.8	45.8	48.3	44.2	53.5	35.0	43.0	43.0	44.8	42.5	49.6	33.4
1440	90	51.3	51.3	52.1	52.1	57.5	44.7	48.6	48.6	48.9	48.9	53.8	43.1	45.7	45.7	45.7	45.7	49.8	41.5
1600	75	46.7	42.4	52.0	31.7	57.4	20.6	43.4	40.7	48.4	30.1	53.4	19.0	40.1	38.1	44.7	28.4	49.3	17.4
1600	80	47.3	47.3	52.3	40.7	57.7	29.7	44.4	44.4	48.8	39.1	53.9	28.1	41.5	41.5	45.0	37.4	49.7	26.5
1600	85	50.2	50.2	52.5	49.0	58.0	38.7	47.4	47.4	49.1	47.3	54.2	37.2	44.4	44.4	45.4	45.4	50.1	35.5
1600	90	53.2	53.2	53.3	53.3	58.3	47.7	50.3	50.3	50.4	50.4	54.5	46.2	47.2	47.2	47.2	47.2	50.4	44.5
1760	75	47.3	44.9	52.6	33.1	57.9	21.0	44.0	42.4	48.9	31.5	53.9	19.4	40.5	40.5	45.1	29.8	49.6	17.7
1760	80	48.6	48.6	52.9	43.0	58.4	31.0	45.7	45.7	49.3	41.4	54.4	29.4	42.6	42.6	45.4	39.6	50.1	27.7
1760	85	51.7	51.7	53.3	52.1	58.7	40.9	48.7	48.7	49.8	49.8	54.7	39.3	45.5	45.5	46.0	46.0	50.5	37.6
1760	90	54.9	54.8	54.9	54.9	59.0	50.8	51.8	51.8	51.8	51.8	55.1	49.2	48.4	48.4	48.5	48.5	50.8	46.5
1920	75	47.9	46.6	53.1	34.6	58.4	21.3	44.5	44.5	49.3	32.9	54.2	19.7	40.9	40.9	45.3	31.1	49.8	17.9
1920	80	49.8	49.8	53.5	45.3	58.9	32.2	46.8	46.8	49.7	43.6	54.8	30.6	43.6	43.6	45.7	40.9	50.4	28.8
1920	85	53.1	53.1	54.0	54.0	59.3	43.1	49.9	49.9	50.4	50.4	55.2	41.4	46.6	46.6	46.6	46.6	50.8	39.7
1920	90	56.3	56.3	56.4	56.4	59.6	53.8	53.0	53.0	53.1	53.1	55.5	51.2	49.5	49.5	49.6	49.6	51.2	49.3

		Ambient Temperature (°F)						Ambient Temperature (°F)					
		115						125					
	Ent	Entering Wet Bulb (°F)						Entering Wet Bulb (°F)					
	DB	61		67		73		61		67		73	
cfm	(°F)	MBh	SHC	MBh	SHC	MBh	SHC	MBh	SHC	MBh	SHC	MBh	SHC
1280	75	35.6	31.9	40.0	24.0	44.2	15.2	32.1	30.1	36.1	22.3	39.9	13.5
1280	80	36.1	36.1	40.3	31.2	44.6	22.5	33.2	33.2	36.4	29.5	40.3	20.8
1280	85	38.5	38.5	40.5	37.7	44.9	29.7	35.5	35.5	36.7	35.9	40.6	28.0
1280	90	41.0	41.0	41.0	41.0	45.2	36.9	37.8	37.8	37.9	37.9	40.9	35.2
1440	75	36.1	34.2	40.4	25.3	44.6	15.4	32.5	32.3	36.4	23.6	40.1	13.7
1440	80	37.4	37.4	40.8	33.4	45.1	23.6	34.2	34.2	36.7	31.7	40.6	21.9
1440	85	40.0	40.0	41.1	40.7	45.4	31.8	36.7	36.7	37.2	37.2	40.9	30.0
1440	90	42.5	42.5	42.6	42.6	45.7	39.9	39.1	39.1	39.2	39.2	41.2	37.2
1600	75	36.6	36.4	40.8	26.7	44.9	15.7	32.9	32.9	36.6	24.9	40.2	13.9
1600	80	38.4	38.4	41.1	35.7	45.4	24.8	35.1	35.1	36.9	32.9	40.8	23.0
1600	85	41.1	41.1	41.6	41.6	45.8	33.8	37.6	37.6	37.7	37.7	41.1	32.0
1600	90	43.8	43.8	43.9	43.9	46.1	41.9	40.1	40.1	40.2	40.2	41.5	39.9
1760	75	36.9	36.9	41.0	28.0	45.1	15.9	33.2	33.2	36.7	26.1	40.3	14.1
1760	80	39.4	39.4	41.3	36.9	45.7	25.9	35.8	35.8	37.1	34.9	40.9	24.1
1760	85	42.1	42.1	42.2	42.2	46.0	35.9	38.4	38.4	38.5	38.5	41.2	34.0
1760	90	44.9	44.9	44.9	44.9	46.4	44.6	41.0	41.0	41.0	41.0	41.7	41.7
1920	75	37.3	37.3	41.1	29.3	45.2	16.1	33.7	33.7	36.7	27.4	40.3	14.3
1920	80	40.1	40.1	41.6	39.0	45.8	27.1	36.4	36.4	37.2	36.8	40.9	25.2
1920	85	43.0	43.0	43.0	43.0	46.2	37.9	39.0	39.0	39.1	39.1	41.3	34.8
1920	90	45.8	45.8	45.8	45.8	46.7	46.7	41.6	41.6	41.7	41.7	42.0	42.0

Notes:

1. All capacities shown are gross and have not considered indoor fan heat. To obtain **NET** cooling capacity subtract indoor fan heat. For indoor fan heat formula, refer to appropriate airflow table notes.
2. MBh = Total Gross Capacity
3. SHC = Sensible Heat Capacity

Gross Cooling Capacities

Table 19. Gross cooling capacities 4 tons - low stage - three phase W/DHC048H3,4,W

		Ambient Temperature (°F)						Ambient Temperature (°F)					
		85						95					
	Ent	Entering Wet Bulb (°F)						Entering Wet Bulb (°F)					
	DB	61		67		73		61		67		73	
cfm	(°F)	MBh	SHC	MBh	SHC	MBh	SHC	MBh	SHC	MBh	SHC	MBh	SHC
800	75	30.3	23.9	34.3	18.9	38.5	13.6	30.3	23.9	34.3	18.9	38.5	13.6
800	80	30.3	28.0	34.5	23.3	38.7	18.1	30.3	28.0	34.5	23.3	38.7	18.1
800	85	30.3	30.3	34.6	27.7	38.9	22.5	30.3	30.3	34.6	27.7	38.9	22.5
800	90	32.3	32.3	34.6	31.8	39.0	27.0	32.3	32.3	34.6	31.8	39.0	27.0
960	75	31.4	26.5	35.5	20.4	39.7	14.0	31.4	26.5	35.5	20.4	39.7	14.0
960	80	31.5	31.4	35.7	25.7	39.9	19.4	31.5	31.4	35.7	25.7	39.9	19.4
960	85	32.8	32.8	35.8	31.0	40.1	24.8	32.8	32.8	35.8	31.0	40.1	24.8
960	90	34.9	34.9	35.9	35.9	40.3	30.1	34.9	34.9	35.9	35.9	40.3	30.1
1120	75	32.2	28.6	36.3	21.8	40.4	14.4	32.2	28.6	36.3	21.8	40.4	14.4
1120	80	32.5	32.5	36.6	28.1	40.8	20.7	32.5	32.5	36.6	28.1	40.8	20.7
1120	85	34.8	34.8	36.8	33.8	41.1	26.9	34.8	34.8	36.8	33.8	41.1	26.9
1120	90	37.1	37.1	37.1	37.1	41.3	33.2	37.1	37.1	37.1	37.1	41.3	33.2
1280	75	32.9	31.0	37.0	23.3	41.0	14.7	32.9	31.0	37.0	23.3	41.0	14.7
1280	80	34.0	34.0	37.3	30.4	41.5	21.9	34.0	34.0	37.3	30.4	41.5	21.9
1280	85	36.4	36.4	37.5	36.9	41.8	29.1	36.4	36.4	37.5	36.9	41.8	29.1
1280	90	38.9	38.9	38.9	38.9	42.0	36.2	38.9	38.9	38.9	38.9	42.0	36.2

Notes:

1. All capacities shown are gross and have not considered indoor fan heat. To obtain **NET** cooling capacity subtract indoor fan heat. For indoor fan heat formula, refer to appropriate airflow table notes.
2. MBh = Total Gross Capacity
3. SHC = Sensible Heat Capacity

Table 20. Gross cooling capacities 5 tons - high stage - three phase W/DHC060H3,4,W

		Ambient Temperature (°F)						Ambient Temperature (°F)						Ambient Temperature (°F)					
		85						95						105					
	Ent	Entering Wet Bulb (°F)						Entering Wet Bulb (°F)						Entering Wet Bulb (°F)					
	DB	61		67		73		61		67		73		61		67		73	
cfm	(°F)	MBh	SHC	MBh	SHC	MBh	SHC	MBh	SHC	MBh	SHC	MBh	SHC	MBh	SHC	MBh	SHC	MBh	SHC
1600	75	56.2	46.7	62.8	36.0	69.9	25.0	52.7	44.9	59.0	34.2	65.6	23.2	49.1	43.0	54.9	32.3	61.0	21.3
1600	80	56.6	55.2	63.1	45.0	70.1	34.0	53.2	53.2	59.2	43.2	65.8	32.3	49.7	49.7	55.2	41.4	61.3	30.4
1600	85	58.5	58.5	63.2	54.0	70.3	43.1	55.6	55.6	59.5	52.2	66.0	41.3	52.5	52.5	55.4	50.4	61.5	39.5
1600	90	61.9	61.9	63.7	62.5	70.4	52.1	58.9	58.9	60.0	60.0	66.3	50.3	55.7	55.7	56.2	56.2	61.8	48.5
1800	75	57.3	49.9	64.0	37.9	71.1	25.5	53.7	48.1	60.0	36.0	66.6	23.6	49.9	46.2	55.7	34.1	61.8	21.7
1800	80	58.1	58.1	64.3	48.0	71.3	35.7	54.6	54.6	60.2	46.2	66.8	33.8	51.0	51.0	56.0	44.2	62.1	31.9
1800	85	61.0	61.0	64.5	58.1	71.5	45.8	57.9	57.9	60.6	56.3	67.1	44.0	54.5	54.5	56.4	53.8	62.3	42.1
1800	90	64.6	64.6	65.3	65.3	71.7	56.0	61.4	61.4	61.6	61.6	67.3	54.2	57.9	57.9	58.0	58.0	62.6	52.3
2000	75	58.3	53.1	64.9	39.7	72.0	25.9	54.5	51.2	60.7	37.8	67.3	24.0	50.6	48.4	56.3	35.8	62.3	22.0
2000	80	59.5	59.5	65.2	51.0	72.3	37.3	56.2	56.2	61.0	49.1	67.6	35.4	52.7	52.7	56.6	47.1	62.7	33.4
2000	85	63.2	63.2	65.7	62.2	72.5	48.6	59.8	59.8	61.6	59.7	67.9	46.7	56.2	56.2	57.3	57.3	63.0	44.7
2000	90	67.0	67.0	67.0	67.0	72.8	59.8	63.5	63.5	63.6	63.6	68.2	58.0	59.7	59.7	59.8	59.8	63.4	56.0
2200	75	59.2	56.3	65.7	41.5	72.8	26.4	55.3	53.7	61.4	39.6	67.9	24.4	51.2	51.2	56.8	37.5	62.8	22.4
2200	80	61.2	61.2	66.0	53.9	73.1	38.9	57.7	57.7	61.7	52.0	68.3	36.9	54.0	54.0	57.1	50.0	63.2	34.9
2200	85	65.1	65.1	66.7	65.6	73.4	51.3	61.5	61.5	62.5	62.5	68.6	49.4	57.7	57.7	58.1	58.1	63.5	47.4
2200	90	69.0	69.0	69.1	69.1	73.7	63.7	65.3	65.3	65.4	65.4	69.0	61.8	61.3	61.3	61.4	61.4	64.0	59.8
2400	75	59.9	58.8	66.4	43.3	73.4	26.8	56.0	56.0	61.9	41.3	68.4	24.8	51.8	51.8	57.1	39.2	63.1	22.7
2400	80	62.7	62.7	66.7	56.8	73.8	40.4	59.1	59.1	62.3	54.8	68.8	38.4	55.2	55.2	57.6	52.8	63.6	36.4
2400	85	66.7	66.7	67.7	67.7	74.1	54.0	63.0	63.0	63.4	63.4	69.1	52.0	58.9	58.9	59.0	59.0	63.9	50.0
2400	90	70.8	70.8	70.9	70.9	74.5	67.5	66.9	66.9	67.0	67.0	69.7	65.6	62.7	62.7	62.8	62.8	64.5	62.6

		Ambient Temperature (°F)						Ambient Temperature (°F)					
		115						125					
	Ent	Entering Wet Bulb (°F)						Entering Wet Bulb (°F)					
	DB	61		67		73		61		67		73	
cfm	(°F)	MBh	SHC	MBh	SHC	MBh	SHC	MBh	SHC	MBh	SHC	MBh	SHC
1600	75	45.2	41.1	50.6	30.4	56.2	19.4	41.1	38.5	46.0	28.4	51.0	17.4
1600	80	46.0	46.0	50.9	39.4	56.5	28.5	42.6	42.6	46.3	37.4	51.3	26.5
1600	85	49.1	49.1	51.2	48.5	56.8	37.5	45.5	45.5	46.7	45.8	51.6	35.5
1600	90	52.2	52.2	52.3	52.3	57.0	46.6	48.4	48.4	48.5	48.5	51.9	44.6
1800	75	45.8	43.6	51.2	32.1	56.7	19.7	41.6	41.4	46.4	30.0	51.4	17.6
1800	80	47.7	47.7	51.5	42.3	57.1	30.0	43.9	43.9	46.7	40.2	51.7	27.9
1800	85	50.9	50.9	52.0	51.7	57.4	40.1	47.0	47.0	47.4	47.4	52.1	38.1
1800	90	54.1	54.1	54.2	54.2	57.7	50.3	50.0	50.0	50.1	50.1	52.4	48.3
2000	75	46.5	46.5	51.6	33.8	57.1	20.0	42.1	42.1	46.7	31.7	51.6	17.9
2000	80	49.0	49.0	52.0	45.1	57.5	31.4	45.0	45.0	47.1	43.0	52.0	29.3
2000	85	52.4	52.4	52.8	52.8	57.9	42.7	48.2	48.2	48.2	48.2	52.3	40.6
2000	90	55.7	55.7	55.8	55.8	58.3	54.0	51.3	51.3	51.4	51.4	52.8	51.0
2200	75	47.0	47.0	52.0	35.5	57.4	20.3	42.6	42.6	46.8	33.3	51.7	18.2
2200	80	50.2	50.2	52.4	47.9	57.9	32.9	45.9	45.9	47.3	44.8	52.2	30.7
2200	85	53.6	53.6	53.6	53.6	58.2	45.3	49.2	49.2	49.2	49.2	52.5	43.2
2200	90	57.1	57.1	57.1	57.1	58.8	56.8	52.4	52.4	52.4	52.4	53.3	53.3
2400	75	47.5	47.5	52.2	37.1	57.6	20.6	43.3	43.3	46.9	34.9	51.8	18.4
2400	80	51.1	51.1	52.7	49.7	58.1	34.3	46.7	46.7	47.6	47.3	52.3	32.1
2400	85	54.7	54.7	54.7	54.7	58.5	47.9	50.0	50.0	50.1	50.1	52.7	45.7
2400	90	58.2	58.2	58.3	58.3	59.3	59.3	53.3	53.3	53.3	53.3	53.6	53.6

Notes:

1. All capacities shown are gross and have not considered indoor fan heat. To obtain **NET** cooling capacity subtract indoor fan heat. For indoor fan heat formula, refer to appropriate airflow table notes.
2. MBh = Total Gross Capacity
3. SHC = Sensible Heat Capacity

Gross Cooling Capacities

Table 21. Gross cooling capacities 5 tons - low stage - three phase W/DHC060H3,4,W

		Ambient Temperature (°F)						Ambient Temperature (°F)					
		85						95					
	Ent	Entering Wet Bulb (°F)						Entering Wet Bulb (°F)					
	DB	61		67		73		61		67		73	
cfm	(°F)	MBh	SHC	MBh	SHC	MBh	SHC	MBh	SHC	MBh	SHC	MBh	SHC
1000	75	37.3	29.7	42.3	23.4	47.8	16.9	34.8	28.4	39.6	22.1	44.7	15.6
1000	80	37.3	35.2	42.4	29.0	47.9	22.5	34.8	33.6	39.7	27.7	44.8	21.1
1000	85	37.3	37.3	42.6	34.5	48.0	28.0	35.3	35.3	39.9	33.2	45.0	26.7
1000	90	39.6	39.6	42.5	39.9	48.1	33.6	37.6	37.6	39.9	38.6	45.1	32.3
1200	75	38.7	33.0	43.8	25.4	49.3	17.4	36.0	31.6	40.8	23.9	46.0	16.0
1200	80	38.8	38.8	44.0	32.0	49.4	24.2	36.1	36.1	41.0	30.6	46.1	22.7
1200	85	40.3	40.3	44.1	38.6	49.6	30.8	38.1	38.1	41.2	37.2	46.3	29.4
1200	90	42.9	42.9	44.2	44.2	49.7	37.5	40.6	40.6	41.4	41.4	46.5	36.1
1400	75	39.6	36.2	44.8	27.2	50.4	17.9	36.7	34.7	41.7	25.7	46.8	16.5
1400	80	40.1	40.1	45.1	35.0	50.6	25.8	37.6	37.6	41.9	33.5	47.1	24.3
1400	85	42.7	42.7	45.2	42.7	50.8	33.6	40.3	40.3	42.1	40.8	47.3	32.1
1400	90	45.5	45.5	45.8	45.8	51.0	41.4	43.0	43.0	43.1	43.1	47.5	39.9
1600	75	40.4	39.3	45.6	29.0	51.2	18.4	37.4	37.2	42.3	27.5	47.4	16.9
1600	80	41.8	41.8	45.9	37.9	51.4	27.4	39.2	39.2	42.6	36.3	47.7	25.8
1600	85	44.8	44.8	46.2	46.2	51.7	36.3	42.1	42.1	43.0	43.0	48.0	34.7
1600	90	47.8	47.8	47.9	47.9	51.9	45.2	45.0	45.0	45.1	45.1	48.3	43.6

Notes:
1. All capacities shown are gross and have not considered indoor fan heat. To obtain **NET** cooling capacity subtract indoor fan heat. For indoor fan heat formula, refer to appropriate airflow table notes.
2. MBh = Total Gross Capacity
3. SHC = Sensible Heat Capacity

Table 22. Gross cooling capacities 6 tons high efficiency - stage 1 - three phase W/DHC074H3,4,W

		Ambient Temperature (°F)						Ambient Temperature (°F)					
		85						95					
	Ent	Entering Wet Bulb (°F)						Entering Wet Bulb (°F)					
	DB	61		67		73		61		67		73	
cfm	(°F)	MBh	SHC	MBh	SHC	MBh	SHC	MBh	SHC	MBh	SHC	MBh	SHC
960	75	29.6	25.5	33.6	19.8	37.7	13.5	27.6	24.4	31.4	18.8	35.3	12.4
	80	29.7	29.7	33.7	25.1	37.9	18.9	27.8	27.8	31.6	23.8	35.6	17.8
	85	31.4	31.4	33.8	29.9	38.1	24.2	29.8	29.8	31.6	28.9	35.8	23.2
	90	33.5	33.5	33.8	33.8	38.2	29.2	31.8	31.8	31.9	31.9	35.9	28.1
1200	75	30.8	29.1	34.8	22.0	38.8	14.1	28.7	28.0	32.4	21.0	36.2	13.0
	80	31.9	31.9	35.0	28.2	39.2	20.8	30.1	30.1	32.6	27.0	36.7	19.8
	85	34.2	34.2	35.1	34.6	39.4	27.5	32.4	32.4	32.9	32.9	36.9	26.5
	90	36.5	36.5	36.6	36.6	39.6	33.5	34.6	34.6	34.7	34.7	37.1	32.4
1440	75	31.7	31.7	35.5	24.2	39.5	14.6	29.5	29.5	33.1	22.5	36.8	13.5
	80	33.9	33.9	35.8	31.4	40.0	22.7	31.9	31.9	33.4	30.2	37.4	21.6
	85	36.4	36.4	36.4	36.4	40.3	30.1	34.3	34.3	34.4	34.4	37.7	28.9
	90	38.9	38.9	38.9	38.9	40.6	37.9	36.8	36.8	36.9	36.9	38.0	36.7
1680	75	32.8	32.8	36.1	25.6	40.0	15.1	30.7	30.7	33.5	24.3	37.1	14.0
	80	35.4	35.4	36.5	34.7	40.6	24.6	33.3	33.3	34.0	33.4	37.9	23.5
	85	38.1	38.1	38.1	38.1	41.0	33.0	35.9	35.9	35.9	35.9	38.3	31.8
	90	40.8	40.8	40.8	40.8	41.4	41.4	38.5	38.5	38.5	38.5	38.8	38.8
1920	75	33.9	33.9	36.5	27.4	40.3	15.6	31.7	31.7	33.9	26.1	37.3	14.4
	80	36.7	36.7	37.1	37.1	41.0	25.5	34.4	34.4	34.6	34.6	38.2	24.2
	85	39.5	39.5	39.5	39.5	41.5	36.0	37.1	37.1	37.1	37.1	38.7	34.7
	90	42.3	42.3	42.3	42.3	42.3	42.3	39.9	39.9	39.9	39.9	40.0	40.0
2100	75	34.6	34.6	36.8	28.8	40.5	16.0	32.3	32.3	34.1	27.4	37.4	14.8
	80	37.5	37.5	37.6	37.6	41.3	27.8	35.1	35.1	35.1	35.1	38.4	25.3
	85	40.3	40.3	40.4	40.4	41.8	38.1	37.9	37.9	37.9	37.9	39.0	36.8
	90	43.2	43.2	43.3	43.3	43.3	43.3	40.7	40.7	40.8	40.8	40.8	40.8

Notes:
1. All capacities shown are gross and have not considered indoor fan heat. To obtain **NET** cooling capacity subtract indoor fan heat. For indoor fan heat formula, refer to appropriate airflow table notes.
2. MBh = Total Gross Capacity
3. SHC = Sensible Heat Capacity

Table 23. Gross cooling capacities 6 tons high efficiency - stage 2 - three phase W/DHC074H3,4,W

		Ambient Temperature (°F)						Ambient Temperature (°F)					
		85						95					
	Ent	Entering Wet Bulb (°F)						Entering Wet Bulb (°F)					
	DB	61		67		73		61		67		73	
cfm	(°F)	MBh	SHC	MBh	SHC	MBh	SHC	MBh	SHC	MBh	SHC	MBh	SHC
960	75	38.1	29.8	42.9	23.6	48.0	17.1	35.8	28.5	40.4	22.3	45.2	15.9
	80	38.0	34.7	43.0	28.9	48.1	22.5	35.8	33.4	40.5	27.7	45.2	21.2
	85	37.8	37.8	43.0	34.1	48.1	27.8	36.1	36.1	40.5	32.9	45.4	26.6
	90	40.0	40.0	43.0	39.0	48.2	33.1	38.2	38.2	40.5	37.8	45.5	31.9
1200	75	39.8	33.4	44.7	25.9	49.8	17.8	37.3	32.1	42.0	24.6	46.7	16.5
	80	39.9	39.8	44.9	32.5	49.9	24.5	37.5	37.5	42.1	31.2	46.9	23.2
	85	41.5	41.5	44.9	38.8	50.0	31.1	39.5	39.5	42.2	37.4	47.0	29.9
	90	44.0	44.0	45.0	45.0	50.2	37.8	41.9	41.9	42.4	42.4	47.1	36.5
1440	75	41.1	37.1	46.0	28.1	50.9	18.3	38.4	35.7	43.0	26.8	47.7	17.0
	80	41.7	41.7	46.1	36.1	51.1	26.4	39.5	39.5	43.2	34.3	48.0	25.1
	85	44.4	44.4	46.3	43.5	51.3	34.4	42.1	42.1	43.4	42.1	48.2	33.1
	90	47.1	47.1	47.2	47.2	51.4	41.9	44.7	44.7	44.8	44.8	48.3	40.5
1680	75	42.1	40.7	46.9	30.3	51.7	18.9	39.3	39.2	43.8	28.9	48.4	17.5
	80	43.8	43.8	47.1	39.1	52.0	28.3	41.4	41.4	44.0	37.6	48.7	26.9
	85	46.7	46.7	47.4	47.4	52.2	37.6	44.1	44.1	44.5	44.5	48.9	36.3
	90	49.5	49.5	49.6	49.6	52.4	46.2	46.9	46.9	47.0	47.0	49.2	44.8
1920	75	42.9	42.9	47.5	32.4	52.4	19.4	40.1	40.1	44.3	31.0	48.9	18.0
	80	45.5	45.5	47.8	42.3	52.7	30.1	42.9	42.9	44.6	40.8	49.3	28.7
	85	48.5	48.5	48.6	48.6	52.9	40.2	45.8	45.8	45.9	45.9	49.5	38.7
	90	51.5	51.5	51.6	51.6	53.3	50.6	48.7	48.7	48.8	48.8	49.9	49.1
2100	75	43.6	43.6	47.9	34.0	52.7	19.8	40.9	40.9	44.6	32.5	49.2	18.4
	80	46.6	46.6	48.3	44.8	53.1	31.5	43.9	43.9	45.0	43.2	49.6	30.1
	85	49.7	49.7	49.8	49.8	53.4	42.4	46.9	46.9	46.9	46.9	49.9	40.9
	90	52.8	52.8	52.8	52.8	53.8	53.8	49.9	49.9	49.9	49.9	50.5	50.5

Notes:

1. All capacities shown are gross and have not considered indoor fan heat. To obtain **NET** cooling capacity subtract indoor fan heat. For indoor fan heat formula, refer to appropriate airflow table notes.
2. MBh = Total Gross Capacity
3. SHC = Sensible Heat Capacity

Gross Cooling Capacities

Table 24. Gross cooling capacities 6 tons - full load - three phase W/DHC074H3,4,W

		Ambient Temperature (°F)						Ambient Temperature (°F)						Ambient Temperature (°F)					
		85						95						105					
	Ent	Entering Wet Bulb (°F)						Entering Wet Bulb (°F)						Entering Wet Bulb (°F)					
	DB	61		67		73		61		67		73		61		67		73	
cfm	(°F)	MBh	SHC	MBh	SHC	MBh	SHC	MBh	SHC	MBh	SHC	MBh	SHC	MBh	SHC	MBh	SHC	MBh	SHC
1920	75	72.1	56.8	80.7	44.8	89.7	32.2	68.0	54.7	76.0	42.6	84.5	30.0	63.6	52.4	71.2	40.4	79.0	27.8
	80	72.3	66.7	80.8	54.9	89.8	42.4	68.3	64.5	76.2	52.8	84.6	40.3	64.0	62.3	71.4	50.5	79.1	38.0
	85	73.6	73.6	80.9	65.0	89.9	52.6	70.2	70.2	76.4	62.9	84.7	50.4	66.6	66.6	71.5	60.6	79.3	48.2
	90	77.7	77.7	81.2	74.8	90.0	62.7	74.2	74.2	76.7	72.7	84.9	60.6	70.5	70.5	72.0	70.4	79.4	58.3
2160	75	73.8	60.6	82.4	47.0	91.4	32.8	69.5	58.4	77.5	44.7	85.9	30.6	64.9	56.1	72.4	42.4	80.2	28.3
	80	74.3	71.7	82.5	58.4	91.5	44.3	70.1	69.4	77.7	56.1	86.1	42.1	65.7	65.7	72.6	53.8	80.4	39.8
	85	77.0	77.0	82.7	69.7	91.6	55.7	73.3	73.3	78.0	67.5	86.2	53.5	69.4	69.4	72.9	64.9	80.5	51.2
	90	81.4	81.4	83.3	80.8	91.8	67.2	77.6	77.6	78.7	78.6	86.4	64.9	73.5	73.5	73.9	73.9	80.7	62.6
2400	75	75.2	64.3	83.8	49.1	92.8	33.3	70.7	62.0	78.7	46.8	87.1	31.1	66.0	59.3	73.4	44.5	81.2	28.7
	80	76.1	76.1	84.0	61.8	92.9	46.1	71.8	71.8	78.9	59.5	87.2	43.8	67.6	67.6	73.6	57.1	81.3	41.5
	85	80.0	80.0	84.3	74.1	93.1	58.8	76.0	76.0	79.3	71.8	87.4	56.6	71.8	71.8	74.1	69.4	81.5	54.2
	90	84.5	84.5	85.3	85.3	93.2	71.5	80.4	80.4	80.6	80.6	87.6	69.3	76.1	76.1	76.2	76.2	81.8	66.9
2640	75	76.4	67.6	84.9	51.2	93.9	33.9	71.8	65.2	79.7	48.8	88.0	31.5	66.9	62.7	74.2	46.4	81.9	29.2
	80	77.8	77.8	85.1	65.1	94.0	47.9	73.8	73.8	79.9	62.8	88.2	45.6	69.5	69.5	74.5	60.4	82.1	43.2
	85	82.5	82.5	85.7	78.7	94.2	61.9	78.4	78.4	80.6	76.3	88.4	59.6	73.9	73.9	75.2	73.8	82.3	57.2
	90	87.3	87.3	87.3	87.3	94.5	75.9	82.9	82.9	83.0	83.0	88.7	73.6	78.3	78.3	78.4	78.4	82.6	70.7
2880	75	77.5	71.1	85.9	53.2	94.8	34.4	72.7	68.7	80.5	50.8	88.8	32.0	67.7	66.2	74.8	48.4	82.5	29.6
	80	79.9	79.9	86.1	68.4	95.0	49.7	75.7	75.7	80.8	66.1	89.0	47.3	71.2	71.2	75.2	63.6	82.7	44.9
	85	84.8	84.8	86.9	83.2	95.2	65.0	80.4	80.4	81.7	80.8	89.2	62.6	75.7	75.7	76.2	76.2	82.9	60.2
	90	89.7	89.7	89.8	89.8	95.5	80.2	85.1	85.1	85.2	85.2	89.6	77.4	80.2	80.2	80.3	80.3	83.4	74.9

		Ambient Temperature (°F)						Ambient Temperature (°F)					
		115						125					
	Ent	Entering Wet Bulb (°F)						Entering Wet Bulb (°F)					
	DB	61		67		73		61		67		73	
cfm	(°F)	MBh	SHC	MBh	SHC	MBh	SHC	MBh	SHC	MBh	SHC	MBh	SHC
1920	75	59.1	50.2	66.1	38.1	73.3	25.5	54.3	47.5	60.7	35.7	67.2	23.1
	80	59.6	59.6	66.3	48.2	73.4	35.7	55.1	55.1	60.9	45.8	67.3	33.3
	85	62.8	62.8	66.5	58.1	73.6	45.9	58.7	58.7	61.2	55.6	67.5	43.5
	90	66.5	66.5	67.1	67.1	73.8	56.0	62.2	62.2	62.3	62.3	67.7	53.6
2160	75	60.2	53.4	67.1	40.1	74.3	25.9	55.2	50.9	61.5	37.6	67.9	23.5
	80	61.4	61.4	67.3	51.5	74.4	37.4	57.1	57.1	61.7	49.0	68.0	35.0
	85	65.3	65.3	67.7	62.5	74.6	48.9	60.8	60.8	62.2	60.0	68.2	46.4
	90	69.2	69.2	69.3	69.3	74.8	60.3	64.4	64.4	64.6	64.6	68.5	57.8
2400	75	61.1	56.8	67.9	42.0	75.0	26.3	56.0	54.2	62.1	39.5	68.4	23.8
	80	63.4	63.4	68.1	54.7	75.1	39.1	58.8	58.8	62.3	52.2	68.6	36.6
	85	67.4	67.4	68.8	66.9	75.3	51.8	62.6	62.6	63.1	63.1	68.8	49.3
	90	71.4	71.4	71.5	71.5	75.6	64.5	66.3	66.3	66.4	66.4	69.1	61.5
2640	75	61.9	60.2	68.5	44.0	75.5	26.7	56.6	56.6	62.5	41.4	68.7	24.2
	80	65.1	65.1	68.8	57.9	75.7	40.8	60.2	60.2	62.8	54.9	68.9	38.2
	85	69.2	69.2	69.7	69.7	75.9	54.7	64.1	64.1	64.2	64.2	69.1	52.2
	90	73.3	73.3	73.4	73.4	76.3	68.2	67.9	67.9	68.0	68.0	69.7	65.5
2880	75	62.6	62.6	69.0	45.9	75.9	27.1	57.3	57.3	62.8	43.3	69.0	24.5
	80	66.5	66.5	69.4	60.6	76.2	42.4	61.4	61.4	63.3	57.9	69.2	39.8
	85	70.7	70.7	70.8	70.8	76.4	57.7	65.4	65.4	65.4	65.4	69.5	55.1
	90	74.9	74.9	75.0	75.0	77.0	72.3	69.2	69.2	69.2	69.2	70.2	69.5

Notes:

1. All capacities shown are gross and have not considered indoor fan heat. To obtain **NET** cooling capacity subtract indoor fan heat. For indoor fan heat formula, refer to appropriate airflow table notes.
2. MBh = Total Gross Capacity
3. SHC = Sensible Heat Capacity

Table 25. Gross cooling capacities 7.5 tons high efficiency - stage 1 - three phase W/DHC092H3,4,W

		Ambient Temperature (°F)						Ambient Temperature (°F)					
		85						95					
	Ent	Entering Wet Bulb (°F)						Entering Wet Bulb (°F)					
	DB	61		67		73		61		67		73	
cfm	(°F)	MBh	SHC	MBh	SHC	MBh	SHC	MBh	SHC	MBh	SHC	MBh	SHC
1200	75	33.1	29.8	37.2	23.1	41.5	15.1	31.2	28.8	35.2	22.1	39.2	14.1
	80	32.9	32.9	37.5	29.7	42.0	21.8	31.0	31.0	35.5	27.8	39.8	20.9
	85	34.2	34.2	37.8	35.3	42.3	28.5	32.7	32.7	35.7	34.2	40.1	27.6
	90	36.5	36.5	37.5	37.5	42.6	34.2	34.9	34.9	35.5	35.5	40.4	33.1
1500	75	34.2	34.2	38.4	25.8	42.5	15.8	32.2	32.2	36.2	24.8	40.0	14.7
	80	34.8	34.8	38.8	32.9	43.3	24.3	33.1	33.1	36.6	31.8	40.9	23.2
	85	37.3	37.3	39.0	39.0	43.7	32.7	35.5	35.5	36.8	36.8	41.3	31.7
	90	39.8	39.8	39.8	39.8	44.0	39.5	38.0	38.0	38.1	38.1	41.7	38.4
1800	75	35.0	35.0	39.2	28.5	43.2	16.4	32.9	32.9	36.9	27.4	40.5	15.3
	80	36.9	36.9	39.7	36.8	44.2	26.6	35.0	35.0	37.4	35.6	41.6	25.6
	85	39.6	39.6	40.1	40.1	44.6	36.7	37.7	37.7	37.8	37.8	42.2	33.9
	90	42.3	42.3	42.4	42.4	45.0	44.8	40.3	40.3	40.4	40.4	42.6	42.6
2100	75	35.8	35.8	39.8	29.5	43.6	17.1	33.7	33.7	37.4	28.2	40.8	15.9
	80	38.5	38.5	40.4	40.4	44.8	29.0	36.5	36.5	38.0	38.0	42.2	27.9
	85	41.4	41.4	41.5	41.5	45.4	38.6	39.3	39.3	39.4	39.4	42.8	37.4
	90	44.3	44.3	44.4	44.4	45.8	45.8	42.2	42.2	42.2	42.2	43.3	43.3
2400	75	36.9	36.9	40.3	31.6	43.9	17.7	34.8	34.8	37.8	30.2	41.0	16.5
	80	39.9	39.9	41.0	41.0	45.3	31.3	37.7	37.7	38.5	38.5	42.6	30.2
	85	42.9	42.9	42.9	42.9	46.0	42.1	40.7	40.7	40.7	40.7	43.3	40.8
	90	46.0	46.0	46.0	46.0	46.5	46.5	43.7	43.7	43.7	43.7	43.9	43.9
2625	75	37.6	37.6	40.6	33.2	44.0	18.1	35.4	35.4	38.0	31.7	41.0	16.9
	80	40.7	40.7	41.3	41.3	45.6	33.1	38.4	38.4	38.8	38.8	42.8	31.9
	85	43.8	43.8	43.9	43.9	46.3	44.7	41.5	41.5	41.5	41.5	43.6	43.4
	90	47.0	47.0	47.0	47.0	47.1	47.1	44.6	44.6	44.6	44.6	44.5	44.5

Notes:

1. All capacities shown are gross and have not considered indoor fan heat. To obtain **NET** cooling capacity subtract indoor fan heat. For indoor fan heat formula, refer to appropriate airflow table notes.
2. MBh = Total Gross Capacity
3. SHC = Sensible Heat Capacity

Gross Cooling Capacities

Table 26. Gross cooling capacities 7.5 tons high efficiency - stage 2 - three phase W/DHC092H3,4,W

		Ambient Temperature (°F)						Ambient Temperature (°F)					
		85						95					
	Ent	Entering Wet Bulb (°F)						Entering Wet Bulb (°F)					
	DB	61		67		73		61		67		73	
cfm	(°F)	MBh	SHC	MBh	SHC	MBh	SHC	MBh	SHC	MBh	SHC	MBh	SHC
1200	75	48.2	37.6	54.2	29.9	60.7	21.9	45.9	36.3	51.6	28.6	57.7	20.6
	80	48.4	43.7	54.5	36.6	61.0	28.6	46.0	42.4	51.9	35.3	58.1	27.3
	85	48.6	48.6	54.6	43.2	61.2	35.3	46.7	46.7	52.0	41.5	58.4	34.0
	90	51.5	51.5	54.7	49.2	61.4	42.0	49.5	49.5	52.2	47.9	58.6	40.7
1500	75	50.6	42.0	56.7	32.9	63.0	22.8	48.0	40.6	53.8	31.5	59.8	21.4
	80	51.0	50.1	57.0	41.2	63.6	31.2	48.5	48.5	54.1	39.8	60.4	29.9
	85	53.3	53.3	57.2	48.8	63.9	39.6	51.1	51.1	54.4	47.4	60.8	38.2
	90	56.6	56.6	57.7	56.9	64.2	47.9	54.3	54.3	55.0	55.0	61.0	46.0
1800	75	52.3	46.5	58.4	35.7	64.6	23.5	49.5	45.0	55.3	34.3	61.1	22.1
	80	53.4	53.4	58.7	44.9	65.4	33.7	51.1	51.1	55.7	43.4	62.0	32.3
	85	57.0	57.0	59.2	54.6	65.8	43.7	54.5	54.5	56.2	53.1	62.4	42.3
	90	60.6	60.6	60.7	60.7	66.1	52.8	58.1	58.1	58.2	58.2	62.8	51.3
2100	75	53.7	51.0	59.6	38.4	65.7	24.2	50.8	49.4	56.3	37.0	62.1	22.7
	80	56.2	56.2	60.1	49.0	66.7	36.1	54	53.6	56.9	47.4	63.1	34.6
	85	60.0	60.0	60.9	60.4	67.1	47.8	57.3	57.3	57.8	57.8	63.6	45.3
	90	63.8	63.8	63.9	63.9	67.7	58.2	61.1	61.1	61.2	61.2	64.2	56.6
2400	75	54.9	54.9	60.5	41.1	66.5	24.9	51.9	51.9	57.0	38.4	62.7	23.4
	80	58.4	58.4	61.2	53.0	67.7	38.4	55.6	55.6	57.9	51.3	63.9	36.9
	85	62.4	62.4	62.5	62.5	68.2	50.5	59.5	59.5	59.6	59.6	64.5	48.8
	90	66.5	66.5	66.6	66.6	69.0	63.5	63.5	63.5	63.6	63.6	65.4	61.8
2625	75	55.8	55.8	61.0	41.8	67.0	25.4	52.8	52.8	57.6	40.0	63.0	23.8
	80	59.8	59.8	61.9	55.9	68.3	40.2	56.9	56.9	58.5	54.2	64.4	38.6
	85	64.0	64.0	64.1	64.1	68.9	53.2	61.0	61.0	61.0	61.0	65.1	51.5
	90	68.3	68.3	68.3	68.3	69.8	67.4	65.1	65.1	65.2	65.2	66.1	65.8

Notes:

1. All capacities shown are gross and have not considered indoor fan heat. To obtain **NET** cooling capacity subtract indoor fan heat. For indoor fan heat formula, refer to appropriate airflow table notes.
2. MBh = Total Gross Capacity
3. SHC = Sensible Heat Capacity

Table 27. Gross cooling capacities 7.5 tons high efficiency - full load - three phase W/DHC092H3,4,W

		Ambient Temperature (°F)						Ambient Temperature (°F)						Ambient Temperature (°F)					
		85						95						105					
	Ent	Entering Wet Bulb (°F)						Entering Wet Bulb (°F)						Entering Wet Bulb (°F)					
	DB	61		67		73		61		67		73		61		67		73	
cfm	(°F)	MBh	SHC	MBh	SHC	MBh	SHC	MBh	SHC	MBh	SHC	MBh	SHC	MBh	SHC	MBh	SHC	MBh	SHC
2400	75	87.8	71.0	97.6	55.3	108.0	39.0	83.3	68.7	92.6	53.0	102.3	36.7	78.5	65.5	87.4	50.6	96.4	34.4
	80	88.4	83.0	98.0	68.4	108.3	52.2	84.0	80.6	93.0	66.1	102.8	49.9	79.5	78.1	87.8	63.7	97.0	47.6
	85	90.6	90.6	98.3	81.4	108.7	65.3	86.8	86.8	93.4	79.1	103.2	63.0	82.9	82.9	88.2	76.7	97.5	60.7
	90	95.6	95.6	99.0	93.3	109.1	78.4	91.7	91.7	94.2	90.9	103.6	76.1	87.6	87.6	89.2	88.4	97.8	73.8
2700	75	89.6	74.9	99.6	58.1	109.9	39.8	85.0	72.4	94.3	55.7	103.9	37.4	80.1	69.8	88.9	53.3	97.8	35.0
	80	90.7	89.2	100.0	72.8	110.3	54.6	86.2	86.2	94.8	70.4	104.5	52.2	81.5	81.5	89.4	68.0	98.5	49.8
	85	94.5	94.5	100.4	87.4	110.8	69.4	90.4	90.4	95.3	83.8	105.0	67.0	86.2	86.2	90.0	81.2	99.0	64.6
	90	99.8	99.8	101.5	100.7	111.2	84.1	95.6	95.6	96.6	96.6	105.4	81.7	91.2	91.2	91.5	91.5	99.4	79.3
3000	75	91.3	79.3	101.2	60.8	111.3	40.4	86.5	76.7	95.7	58.4	105.2	38.0	81.5	74.0	90.1	55.9	98.8	35.6
	80	92.8	92.8	101.7	77.1	112.0	56.9	88.3	88.3	96.2	74.7	105.9	54.5	83.8	83.8	90.6	72.2	99.7	52.1
	85	97.9	97.9	102.3	92.0	112.5	73.4	93.5	93.5	97.0	89.4	106.5	71.0	89.0	89.0	91.5	86.7	100.3	68.5
	90	103.4	103.4	104.0	104.0	112.9	89.7	98.9	98.9	99.0	99.0	106.9	87.3	94.2	94.2	94.3	94.3	100.7	83.2
3300	75	92.8	83.6	102.5	63.5	112.5	41.1	87.8	81.0	96.9	61.0	106.2	38.7	82.6	78.2	91.0	58.4	99.7	36.1
	80	95.0	95.0	103.0	81.4	113.3	59.3	90.7	90.7	97.4	78.9	107.1	56.8	86.0	86.0	91.6	74.8	100.6	54.3
	85	100.8	100.8	103.9	97.6	113.9	77.3	96.2	96.2	98.5	94.9	107.7	74.9	91.4	91.4	92.8	92.2	101.3	72.4
	90	106.6	106.6	106.5	106.5	114.4	93.7	101.8	101.8	101.9	101.9	108.2	91.1	96.8	96.8	96.9	96.9	101.9	88.3
3600	75	94.1	87.9	103.6	66.1	113.6	41.8	88.9	85.2	97.8	63.6	107.1	39.3	83.6	82.4	91.8	61.0	100.4	36.7
	80	97.5	97.5	104.2	84.2	114.5	61.6	92.8	92.8	98.4	81.4	108.1	59.1	88.0	88.0	92.5	78.6	101.4	56.5
	85	103.4	103.4	105.4	103.2	115.1	81.3	98.6	98.6	99.9	99.9	108.7	78.8	93.5	93.5	94.1	94.1	102.1	76.2
	90	109.3	109.3	109.5	109.5	115.7	98.9	104.3	104.3	104.4	104.4	109.4	96.2	99.0	99.0	99.1	99.1	102.9	93.4

		Ambient Temperature (°F)						Ambient Temperature (°F)					
		115						125					
	Ent	Entering Wet Bulb (°F)						Entering Wet Bulb (°F)					
	DB	61		67		73		61		67		73	
cfm	(°F)	MBh	SHC	MBh	SHC	MBh	SHC	MBh	SHC	MBh	SHC	MBh	SHC
2400	75	73.7	62.9	81.9	48.2	90.2	31.9	68.5	60.1	76.1	45.6	83.6	29.4
	80	74.7	74.7	82.4	61.3	90.9	45.1	69.8	69.8	76.6	58.7	84.4	42.6
	85	78.7	78.7	82.9	73.1	91.4	58.3	74.1	74.1	77.2	70.3	84.9	55.7
	90	83.3	83.3	84.0	84.0	91.8	71.3	78.5	78.5	78.6	78.6	85.2	68.8
2700	75	75.1	67.1	83.2	50.8	91.3	32.5	69.7	64.2	77.1	48.2	84.5	29.9
	80	76.8	76.8	83.7	65.5	92.1	47.4	72.1	72.1	77.6	61.5	85.3	44.7
	85	81.6	81.6	84.4	78.5	92.7	62.1	76.7	76.7	78.5	75.7	85.9	59.5
	90	86.4	86.4	86.6	86.6	93.1	75.4	81.3	81.3	81.4	81.4	86.4	72.6
3000	75	76.2	71.2	84.2	53.3	92.2	33.0	70.7	68.3	77.9	50.6	85.1	30.4
	80	79.2	79.2	84.7	68.2	93.1	49.6	74.2	74.2	78.5	65.2	86.1	46.9
	85	84.2	84.2	85.7	84.0	93.7	66.0	78.9	78.9	79.7	79.7	86.7	63.3
	90	89.1	89.1	89.3	89.3	94.3	80.5	83.6	83.6	83.7	83.7	87.3	77.5
3300	75	77.2	75.4	84.9	55.8	92.9	33.6	71.5	71.5	78.5	53.1	85.6	30.8
	80	81.1	81.1	85.6	71.9	93.9	51.7	75.9	75.9	79.2	68.9	86.6	49.0
	85	86.3	86.3	87.0	87.0	94.5	69.8	80.7	80.7	80.9	80.9	87.2	65.1
	90	91.4	91.4	91.5	91.5	95.2	85.5	85.5	85.5	85.6	85.6	88.1	82.4
3600	75	78.1	78.1	85.6	58.3	93.4	34.1	72.4	72.4	78.9	55.5	85.9	31.3
	80	82.8	82.8	86.3	75.6	94.5	53.9	77.3	77.3	79.8	72.5	87.1	51.1
	85	88.1	88.1	88.2	88.2	95.1	71.6	82.3	82.3	82.4	82.4	87.7	68.4
	90	93.3	93.3	93.5	93.5	96.1	90.4	87.2	87.2	87.3	87.3	88.8	87.3

Notes:

1. All capacities shown are gross and have not considered indoor fan heat. To obtain **NET** cooling capacity subtract indoor fan heat. For indoor fan heat formula, refer to appropriate airflow table notes.
2. MBh = Total Gross Capacity
3. SHC = Sensible Heat Capacity

Gross Cooling Capacities

Table 28. Gross cooling capacities 8.5 tons high efficiency - stage 1 - three phase W/DHC102H3,4,W

		Ambient Temperature (°F)						Ambient Temperature (°F)					
		85						95					
	Ent	Entering Wet Bulb (°F)						Entering Wet Bulb (°F)					
	DB	61		67		73		61		67		73	
cfm	(°F)	MBh	SHC	MBh	SHC	MBh	SHC	MBh	SHC	MBh	SHC	MBh	SHC
1360	75	40.9	36.2	46.2	27.7	52.0	18.7	38.0	34.7	43.2	26.3	48.7	17.3
	80	41.8	41.8	46.3	35.2	52.2	26.3	39.4	39.4	43.3	33.8	48.9	24.9
	85	44.6	44.6	46.5	42.4	52.3	33.8	42.3	42.3	43.5	41.0	49.0	32.5
	90	47.5	47.5	47.7	47.7	52.4	41.3	45.1	45.1	45.2	45.2	49.1	40.0
1700	75	42.6	41.5	47.8	30.8	53.6	19.5	39.6	39.6	44.5	29.4	50.0	18.1
	80	45.1	45.1	48.0	40.0	53.8	29.0	42.5	42.5	44.8	38.5	50.3	27.6
	85	48.3	48.3	48.6	48.6	54.0	38.5	45.7	45.7	45.8	45.8	50.5	37.1
	90	51.6	51.6	51.7	51.7	54.3	47.6	48.9	48.9	49.0	49.0	50.8	46.2
2040	75	44.3	44.3	48.8	33.9	54.6	20.3	41.5	41.5	45.4	32.4	50.9	18.9
	80	47.7	47.7	49.2	44.8	55.0	31.7	44.9	44.9	45.9	43.3	51.3	30.3
	85	51.2	51.2	51.3	51.3	55.2	43.1	48.3	48.3	48.4	48.4	51.5	41.2
	90	54.7	54.7	54.8	54.8	55.8	53.9	51.7	51.7	51.8	51.8	52.3	52.3
2380	75	46.1	46.1	49.6	36.9	55.4	21.1	43.2	43.2	46.0	34.9	51.5	19.6
	80	49.8	49.8	50.3	49.6	55.8	34.4	46.7	46.7	46.9	46.9	51.9	32.9
	85	53.5	53.5	53.5	53.5	56.1	47.1	50.3	50.3	50.4	50.4	52.4	45.6
	90	57.2	57.2	57.3	57.3	57.3	57.3	54.0	54.0	54.1	54.1	54.1	54.1
2720	75	47.6	47.6	50.2	39.4	55.9	21.8	44.4	44.4	46.5	37.7	52.0	20.3
	80	51.4	51.4	51.4	51.4	56.3	37.0	48.2	48.2	48.2	48.2	52.4	35.5
	85	55.3	55.3	55.3	55.3	56.9	51.5	52.0	52.0	52.0	52.0	53.1	49.9
	90	59.2	59.2	59.3	59.3	59.3	59.3	55.8	55.8	55.8	55.8	55.9	55.9
2975	75	48.5	48.5	50.5	41.5	56.3	22.4	45.2	45.2	46.8	39.8	52.2	20.8
	80	52.4	52.4	52.5	52.5	56.7	39.0	49.1	49.1	49.1	49.1	52.7	36.8
	85	56.4	56.4	56.5	56.5	57.4	54.7	53.0	53.0	53.0	53.0	53.6	53.1
	90	60.5	60.5	60.5	60.5	60.6	60.6	56.9	56.9	57.0	57.0	57.0	57.0

Notes:

1. All capacities shown are gross and have not considered indoor fan heat. To obtain **NET** cooling capacity subtract indoor fan heat. For indoor fan heat formula, refer to appropriate airflow table notes.
2. MBh = Total Gross Capacity
3. SHC = Sensible Heat Capacity

Table 29. Gross cooling capacities 8.5 tons high efficiency - stage 2 - three phase W/DHC102H3,4,W

		Ambient Temperature (°F)						Ambient Temperature (°F)					
		85						95					
	Ent	Entering Wet Bulb (°F)						Entering Wet Bulb (°F)					
	DB	61		67		73		61		67		73	
cfm	(°F)	MBh	SHC	MBh	SHC	MBh	SHC	MBh	SHC	MBh	SHC	MBh	SHC
1360	75	50.6	40.8	57.2	32.0	64.2	22.9	47.7	39.2	53.9	30.5	60.6	21.4
	80	50.7	48.2	57.2	39.5	64.2	30.5	47.9	46.7	54.0	38.0	60.7	29.0
	85	52.4	52.4	57.2	47.0	64.2	38.0	50.1	50.1	54.0	45.5	60.7	36.6
	90	55.6	55.6	57.3	54.4	64.3	45.5	53.1	53.1	54.2	52.9	60.8	44.1
1700	75	52.9	46.3	59.5	35.3	66.6	23.9	49.7	44.8	56.0	33.7	62.8	22.3
	80	53.8	53.8	59.5	44.7	66.7	33.4	51.1	51.1	56.1	43.1	62.8	31.8
	85	57.2	57.2	59.7	54.0	66.7	42.8	54.5	54.5	56.3	52.4	62.9	41.2
	90	60.7	60.7	60.9	60.9	66.8	52.2	58.0	58.0	58.1	58.1	63.0	50.6
2040	75	54.6	51.7	61.1	38.4	68.2	24.7	51.3	50.1	57.4	36.8	64.2	23.1
	80	57.2	57.2	61.2	49.7	68.3	36.1	54.3	54.3	57.5	48.1	64.2	34.5
	85	61.0	61.0	61.8	61.0	68.4	47.4	58.0	58.0	58.3	58.3	64.4	45.8
	90	64.8	64.8	64.9	64.9	68.6	58.7	61.7	61.7	61.8	61.8	64.6	57.1
2380	75	56.1	56.1	62.2	41.5	69.4	25.5	52.9	52.9	58.3	39.8	65.1	23.9
	80	59.9	59.9	62.5	54.7	69.5	38.8	56.7	56.7	58.7	53.0	65.2	37.1
	85	64.0	64.0	63.8	63.8	69.6	52.0	60.7	60.7	60.8	60.8	65.4	50.3
	90	68.1	68.1	68.2	68.2	70.1	65.1	64.7	64.7	64.8	64.8	66.0	63.5
2720	75	57.9	57.9	63.0	44.5	70.3	26.3	54.7	54.7	59.0	42.8	65.9	24.6
	80	62.1	62.1	63.6	59.5	70.4	41.4	58.8	58.8	59.7	57.8	66.0	39.7
	85	66.4	66.4	66.1	66.1	70.6	56.5	62.9	62.9	63.0	63.0	66.3	54.8
	90	70.7	70.7	70.8	70.8	71.5	71.5	67.0	67.0	67.1	67.1	67.3	67.3
2975	75	59.2	59.2	63.6	46.8	70.8	26.8	55.8	55.8	59.4	45.0	66.3	25.1
	80	63.5	63.5	64.3	63.2	70.9	43.4	60.0	60.0	60.4	60.4	66.4	41.7
	85	68.0	68.0	68.0	68.0	71.3	60.0	64.3	64.3	64.3	64.3	66.8	58.2
	90	72.4	72.4	71.0	71.0	72.6	72.6	68.6	68.6	68.6	68.6	68.7	68.7

Notes:

1. All capacities shown are gross and have not considered indoor fan heat. To obtain **NET** cooling capacity subtract indoor fan heat. For indoor fan heat formula, refer to appropriate airflow table notes.
2. MBh = Total Gross Capacity
3. SHC = Sensible Heat Capacity

Gross Cooling Capacities

Table 30. Gross cooling capacities 8.5 tons high efficiency - full load - three phase W/DHC102H3,4,W

		Ambient Temperature (°F)						Ambient Temperature (°F)						Ambient Temperature (°F)					
		85						95						105					
	Ent	Entering Wet Bulb (°F)						Entering Wet Bulb (°F)						Entering Wet Bulb (°F)					
	DB	61		67		73		61		67		73		61		67		73	
cfm	(°F)	MBh	SHC	MBh	SHC	MBh	SHC	MBh	SHC	MBh	SHC	MBh	SHC	MBh	SHC	MBh	SHC	MBh	SHC
2720	75	97.4	79.6	108.2	61.7	119.6	43.1	92.1	76.9	102.3	59.0	113.0	40.5	86.5	74.2	96.1	56.3	106.2	37.8
	80	98.2	93.9	108.5	76.5	119.8	58.1	93.1	91.2	102.6	73.8	113.3	55.4	87.7	87.7	96.5	71.1	106.5	52.7
	85	101.7	101.7	108.8	91.3	120.1	72.9	97.2	97.2	103.0	88.6	113.6	70.3	92.4	92.4	97.0	85.9	106.8	67.6
	90	107.3	107.3	109.7	105.5	120.3	87.7	102.6	102.6	104.1	102.8	113.8	85.1	97.7	97.7	98.3	98.3	107.1	82.4
3060	75	99.5	85.0	110.2	64.8	121.6	43.9	94.0	82.3	104.1	62.1	114.8	41.2	88.2	79.5	97.7	59.3	107.6	38.5
	80	100.8	100.8	110.5	81.4	121.9	60.7	95.6	95.6	104.4	78.7	115.0	58.0	90.5	90.5	98.0	75.9	108.0	55.3
	85	105.9	105.9	111.1	98.1	122.2	77.5	101.1	101.1	105.1	94.7	115.4	74.8	96.0	96.0	98.8	91.8	108.3	72.0
	90	111.8	111.8	112.7	112.7	122.5	94.1	106.8	106.8	107.0	107.0	115.7	91.5	101.4	101.4	101.6	101.6	108.7	88.7
3400	75	101.3	90.4	111.9	67.8	123.2	44.7	95.6	86.8	105.5	65.1	116.1	42.0	89.6	83.8	98.9	62.2	108.7	39.2
	80	103.4	103.4	112.2	86.3	123.5	63.4	98.5	98.5	105.9	83.6	116.5	60.6	93.2	93.2	99.3	80.7	109.2	57.8
	85	109.5	109.5	113.1	104.1	123.9	81.9	104.4	104.4	106.9	101.2	116.8	79.2	98.9	98.9	100.5	98.3	109.5	76.4
	90	115.7	115.7	115.7	115.7	124.3	100.5	110.3	110.3	110.5	110.5	117.3	97.8	104.6	104.6	104.8	104.8	110.1	95.0
3740	75	102.8	94.8	113.3	70.9	124.5	45.4	97.0	91.8	106.7	68.0	117.2	42.7	90.9	88.7	99.8	65.1	109.6	39.8
	80	106.4	106.4	113.7	91.2	124.9	66.0	101.1	101.1	107.2	88.4	117.6	63.2	95.6	95.6	100.4	85.5	110.1	60.3
	85	112.7	112.7	114.9	110.6	125.3	86.4	107.2	107.2	108.6	107.7	118.0	83.6	101.5	101.5	102.1	102.1	110.5	80.8
	90	119.0	119.0	119.2	119.2	125.8	106.9	113.3	113.3	113.5	113.5	118.7	104.1	107.3	107.3	107.5	107.5	111.3	100.1
4080	75	104.3	99.8	114.4	73.8	125.6	46.2	98.3	96.8	107.6	70.9	118.1	43.3	92.1	92.1	100.6	68.0	110.3	40.4
	80	108.9	108.9	114.9	96.1	126.0	68.6	103.4	103.4	108.2	93.2	118.6	65.7	97.7	97.7	101.3	89.1	110.9	62.8
	85	115.4	115.4	116.6	116.6	126.4	90.9	109.7	109.7	110.2	110.2	119.0	88.0	103.7	103.7	103.7	103.7	111.3	85.1
	90	121.9	121.9	122.1	122.1	127.2	113.2	115.9	115.9	116.1	116.1	119.9	109.1	109.7	109.7	109.8	109.8	112.4	106.0

		Ambient Temperature (°F)						Ambient Temperature (°F)					
		115						125					
	Ent	Entering Wet Bulb (°F)						Entering Wet Bulb (°F)					
	DB	61		67		73		61		67		73	
cfm	(°F)	MBh	SHC	MBh	SHC	MBh	SHC	MBh	SHC	MBh	SHC	MBh	SHC
2720	75	80.7	71.3	89.7	53.5	99.0	35.0	74.5	67.7	82.8	50.5	91.2	32.1
	80	82.3	82.3	90.0	68.3	99.3	49.9	77.0	77.0	83.1	65.3	91.6	47.0
	85	87.4	87.4	90.6	82.4	99.6	64.8	81.8	81.8	83.8	79.3	91.9	61.9
	90	92.4	92.4	92.6	92.6	100.0	79.6	86.6	86.6	86.8	86.8	92.3	76.7
3060	75	82.2	75.7	90.9	56.4	100.1	35.6	75.8	72.5	83.8	53.4	92.0	32.6
	80	85.2	85.2	91.3	73.0	100.5	52.4	79.6	79.6	84.2	70.0	92.5	49.4
	85	90.5	90.5	92.3	88.8	100.9	69.2	84.6	84.6	85.4	85.4	92.9	66.2
	90	95.8	95.8	95.9	95.9	101.4	85.9	89.5	89.5	89.7	89.7	93.4	81.9
3400	75	83.5	80.7	91.9	59.3	101.0	36.3	77.0	77.0	84.5	56.2	92.7	33.2
	80	87.7	87.7	92.4	77.8	101.5	54.9	81.7	81.7	85.1	73.7	93.3	51.9
	85	93.2	93.2	93.9	93.9	101.9	73.5	86.9	86.9	87.0	87.0	93.6	70.5
	90	98.6	98.6	98.7	98.7	102.5	91.0	91.9	91.9	92.1	92.1	94.5	87.8
3740	75	84.7	84.7	92.7	62.1	101.7	36.9	78.1	78.1	85.1	59.0	93.2	33.8
	80	89.8	89.8	93.3	81.4	102.2	57.4	83.5	83.5	85.8	78.1	93.8	54.3
	85	95.4	95.4	95.5	95.5	102.7	77.8	88.8	88.8	88.9	88.9	94.2	74.7
	90	100.9	100.9	101.1	101.1	103.6	96.9	93.9	93.9	94.0	94.0	95.4	93.6
4080	75	85.8	85.8	93.3	64.9	102.2	37.5	79.5	79.5	85.5	61.7	93.6	34.3
	80	91.6	91.6	94.2	85.9	102.8	59.9	84.9	84.9	86.5	82.4	94.2	56.7
	85	97.3	97.3	97.4	97.4	103.3	82.2	90.3	90.3	90.4	90.4	94.7	79.0
	90	102.9	102.9	103.1	103.1	104.6	102.8	95.6	95.6	95.7	95.7	96.2	96.2

Notes:

1. All capacities shown are gross and have not considered indoor fan heat. To obtain **NET** cooling capacity subtract indoor fan heat. For indoor fan heat formula, refer to appropriate airflow table notes.
2. MBh = Total Gross Capacity
3. SHC = Sensible Heat Capacity

Table 31. Gross cooling capacities 10 tons high efficiency - stage 1 - three phase W/DHC120H3,4,W

		Ambient Temperature (°F)						Ambient Temperature (°F)					
		85						95					
	Ent	Entering Wet Bulb (°F)						Entering Wet Bulb (°F)					
	DB	61		67		73		61		67		73	
cfm	(°F)	MBh	SHC	MBh	SHC	MBh	SHC	MBh	SHC	MBh	SHC	MBh	SHC
3200	75	50.7	42.7	57.6	32.9	64.8	22.4	46.9	40.5	53.5	30.8	60.3	20.3
	80	51.0	51.0	57.8	41.7	65.2	31.4	47.6	47.6	53.7	39.6	60.8	29.3
	85	54.4	54.4	57.9	50.2	65.4	40.3	51.2	51.2	53.9	48.0	61.1	38.2
	90	58.0	58.0	58.3	58.3	65.5	49.1	54.7	54.7	54.9	54.9	61.2	47.0
3600	75	52.9	49.0	59.8	36.7	67.0	23.5	48.9	46.7	55.4	34.5	62.2	21.4
	80	55.3	55.3	60.0	47.4	67.6	34.7	51.8	51.8	55.7	45.1	62.9	32.6
	85	59.3	59.3	60.5	58.3	67.9	45.8	55.7	55.7	56.3	56.0	63.2	43.7
	90	63.4	63.4	63.5	63.5	68.1	56.5	59.7	59.7	59.9	59.9	63.5	54.2
4000	75	54.7	54.7	61.3	40.4	68.4	24.5	50.8	50.8	56.7	38.1	63.4	22.3
	80	58.8	58.8	61.7	53.0	69.2	38.0	55.0	55.0	57.2	50.7	64.2	35.8
	85	63.2	63.2	63.3	63.3	69.5	51.3	59.3	59.3	59.4	59.4	64.6	48.4
	90	67.6	67.6	67.7	67.7	70.0	63.9	63.6	63.6	63.7	63.7	65.3	61.6
4400	75	57.0	57.0	62.3	43.3	69.4	25.4	53.0	53.0	57.5	40.8	64.1	23.2
	80	61.6	61.6	63.1	58.6	70.3	41.1	57.5	57.5	58.4	56.1	65.2	38.9
	85	66.2	66.2	66.3	66.3	70.8	55.9	62.0	62.0	62.1	62.1	65.7	53.4
	90	70.9	70.9	71.0	71.0	71.7	71.3	66.6	66.6	66.7	66.7	66.9	66.9
	75	59.0	59.0	63.2	46.5	69.9	26.3	54.7	54.7	58.2	43.9	64.4	24.0
	80	63.8	63.8	64.3	64.1	71.1	44.3	59.5	59.5	59.6	59.6	65.8	41.9
	85	68.7	68.7	68.8	68.8	71.8	60.9	64.3	64.3	64.3	64.3	66.6	58.4
	90	73.7	73.7	73.8	73.8	73.9	73.9	69.1	69.1	69.2	69.2	69.3	69.3
	75	60.2	60.2	63.7	48.9	70.2	27.0	55.8	55.8	58.6	46.2	64.6	24.6
	80	65.2	65.2	65.2	65.2	71.6	45.4	60.7	60.7	60.8	60.8	66.2	42.7
	85	70.3	70.3	70.4	70.4	72.5	64.6	65.6	65.6	65.7	65.7	67.2	62.1
	90	75.4	75.4	75.5	75.5	75.6	75.6	70.6	70.6	70.7	70.7	70.8	70.8

Notes:

1. All capacities shown are gross and have not considered indoor fan heat. To obtain **NET** cooling capacity subtract indoor fan heat. For indoor fan heat formula, refer to appropriate airflow table notes.
2. MBh = Total Gross Capacity
3. SHC = Sensible Heat Capacity

Gross Cooling Capacities

Table 32. Gross cooling capacities 10 tons high efficiency - stage 2 - three phase W/DHC120H3,4,W

		Ambient Temperature (°F)						Ambient Temperature (°F)					
		85						95					
	Ent	Entering Wet Bulb (°F)						Entering Wet Bulb (°F)					
	DB	61		67		73		61		67		73	
cfm	(°F)	MBh	SHC	MBh	SHC	MBh	SHC	MBh	SHC	MBh	SHC	MBh	SHC
1600	75	57.4	46.0	64.5	35.6	72.1	24.9	53.7	43.8	60.5	33.5	67.7	22.8
	80	57.6	54.5	64.7	44.5	72.3	33.8	53.9	52.3	60.7	42.3	67.9	31.7
	85	59.5	59.5	64.7	53.2	72.5	42.7	56.4	56.4	60.7	51.1	68.0	40.6
	90	63.1	63.1	64.9	61.7	72.5	51.5	59.9	59.9	61.0	59.6	68.2	49.4
2000	75	59.9	52.2	67.1	39.5	74.7	26.0	56.0	49.9	62.7	37.2	69.8	23.8
	80	61.0	61.0	67.3	50.5	75.0	37.2	57.5	57.5	62.9	48.3	70.2	35.0
	85	64.9	64.9	67.6	61.2	75.2	48.3	61.4	61.4	63.3	58.9	70.4	46.1
	90	68.9	68.9	69.0	69.0	75.3	59.3	65.3	65.3	65.4	65.4	70.6	57.1
2400	75	61.8	58.4	68.8	43.2	76.4	27.0	57.6	56.0	64.2	40.8	71.3	24.7
	80	64.8	64.8	69.1	56.4	76.8	40.4	61.0	61.0	64.5	53.7	71.7	38.1
	85	69.1	69.1	69.8	69.1	77.0	53.7	65.2	65.2	65.3	65.3	72.0	51.5
	90	73.4	73.4	73.5	73.5	77.4	66.6	69.4	69.4	69.5	69.5	72.4	64.2
2800	75	63.4	63.4	70.0	46.8	77.5	27.9	59.4	59.4	65.2	44.4	72.2	25.6
	80	67.8	67.8	70.5	61.7	78.1	43.6	63.7	63.7	65.7	59.2	72.8	41.2
	85	72.4	72.4	72.5	72.5	78.4	59.1	68.2	68.2	68.3	68.3	73.1	56.8
	90	77.0	77.0	77.1	77.1	79.0	74.0	72.6	72.6	72.7	72.7	73.9	71.5
3200	75	65.5	65.5	71.0	50.3	78.4	28.8	61.3	61.3	65.9	47.9	72.9	26.4
	80	70.2	70.2	71.7	67.2	79.0	46.7	65.9	65.9	66.8	64.7	73.5	44.3
	85	75.1	75.1	75.2	75.2	79.5	63.8	70.6	70.6	70.7	70.7	74.0	61.3
	90	79.9	79.9	80.1	80.1	80.5	80.5	75.2	75.2	75.3	75.3	75.4	75.4
3500	75	66.9	66.9	71.5	52.9	78.9	29.5	62.5	62.5	66.4	49.7	73.3	27.0
	80	71.8	71.8	72.5	71.4	79.6	49.0	67.3	67.3	67.5	67.5	74.0	46.6
	85	76.8	76.8	76.9	76.9	80.1	67.6	72.1	72.1	72.1	72.1	74.6	65.0
	90	81.8	81.8	81.9	81.9	82.0	82.0	76.9	76.9	77.0	77.0	77.1	77.1

Notes:

1. All capacities shown are gross and have not considered indoor fan heat. To obtain **NET** cooling capacity subtract indoor fan heat. For indoor fan heat formula, refer to appropriate airflow table notes.
2. MBh = Total Gross Capacity
3. SHC = Sensible Heat Capacity

Table 33. Gross cooling capacities 10 tons high efficiency - full load - three phase W/DHC120H3,4,W

		Ambient Temperature (°F)						Ambient Temperature (°F)						Ambient Temperature (°F)					
		85						95						105					
	Ent	Entering Wet Bulb (°F)						Entering Wet Bulb (°F)						Entering Wet Bulb (°F)					
	DB	61		67		73		61		67		73		61		67		73	
cfm	(°F)	MBh	SHC	MBh	SHC	MBh	SHC	MBh	SHC	MBh	SHC	MBh	SHC	MBh	SHC	MBh	SHC	MBh	SHC
3200	75	114.2	92.2	127.0	71.2	140.5	49.4	107.3	88.4	119.4	67.5	132.1	45.7	100.2	84.6	111.5	63.7	123.4	42.0
	80	114.9	109.0	127.3	88.5	140.7	66.9	108.2	105.2	119.7	84.8	132.3	63.3	101.2	101.2	111.9	81.1	123.7	59.5
	85	118.8	118.8	127.6	105.9	141.0	84.4	112.9	112.9	120.1	102.2	132.7	80.7	106.8	106.8	112.3	98.4	124.1	77.0
	90	125.4	125.4	128.4	122.7	141.2	101.7	119.3	119.3	121.1	118.9	132.9	98.1	112.9	112.9	113.6	113.6	124.4	94.4
3600	75	116.6	98.5	129.4	74.8	142.9	50.4	109.5	94.7	121.5	71.1	134.1	46.6	102.1	90.8	113.3	67.2	125.1	42.8
	80	117.9	117.5	129.8	94.4	143.2	70.1	111.1	111.1	121.9	90.6	134.5	66.3	104.5	104.5	113.7	86.7	125.5	62.6
	85	123.9	123.9	130.3	113.9	143.5	89.7	117.6	117.6	122.5	110.2	134.8	86.0	111.0	111.0	114.5	105.6	125.9	82.2
	90	130.8	130.8	131.8	131.8	143.8	109.3	124.3	124.3	124.5	124.5	135.2	105.6	117.5	117.5	117.7	117.7	126.3	101.8
4000	75	118.7	104.8	131.4	78.4	144.8	51.3	111.3	100.9	123.2	74.6	135.7	47.5	103.7	96.1	114.8	70.6	126.4	43.6
	80	121.0	121.0	131.8	100.1	145.1	73.2	114.6	114.6	123.6	96.3	136.1	69.4	107.9	107.9	115.2	92.4	126.9	65.5
	85	128.3	128.3	132.6	121.9	145.5	95.0	121.6	121.6	124.6	117.2	136.5	91.2	114.6	114.6	116.4	113.1	127.3	87.4
	90	135.5	135.5	135.7	135.7	145.9	116.8	128.6	128.6	128.8	128.8	137.1	113.0	121.3	121.3	121.5	121.5	127.9	109.2
4400	75	120.5	110.2	133.0	82.0	146.3	52.2	113.0	106.1	124.6	78.0	137.0	48.3	105.2	101.9	115.9	74.0	127.5	44.4
	80	124.6	124.6	133.5	105.9	146.8	76.3	117.8	117.8	125.1	101.9	137.5	72.4	110.7	110.7	116.5	98.0	128.0	68.5
	85	132.1	132.1	134.7	128.9	147.2	100.3	125.0	125.0	126.6	124.8	138.0	96.4	117.7	117.7	118.2	118.2	128.5	92.5
	90	139.6	139.6	139.8	139.8	147.8	124.2	132.2	132.2	132.4	132.4	138.7	120.4	124.6	124.6	124.8	124.8	129.3	115.4
4800	75	122.2	116.2	134.4	85.5	147.6	53.0	114.5	112.0	125.7	81.5	138.1	49.1	106.5	106.5	116.8	77.4	128.3	45.1
	80	127.7	127.7	135.0	111.6	148.1	79.3	120.6	120.6	126.4	107.6	138.7	75.4	113.2	113.2	117.5	102.5	128.9	71.4
	85	135.4	135.4	136.7	136.6	148.5	105.5	128.0	128.0	128.4	128.4	139.1	101.6	120.3	120.3	120.3	120.3	129.4	97.6
	90	143.1	143.1	143.3	143.3	149.4	131.7	135.4	135.4	135.6	135.6	140.1	126.6	127.4	127.4	127.6	127.6	130.6	122.5

		Ambient Temperature (°F)						Ambient Temperature (°F)					
		115						125					
	Ent	Entering Wet Bulb (°F)						Entering Wet Bulb (°F)					
	DB	61		67		73		61		67		73	
cfm	(°F)	MBh	SHC	MBh	SHC	MBh	SHC	MBh	SHC	MBh	SHC	MBh	SHC
3200	75	92.7	80.7	103.3	59.8	114.3	38.2	84.7	76.0	94.5	55.7	104.5	34.2
	80	94.2	94.2	103.7	77.2	114.7	55.7	87.4	87.4	94.9	73.1	104.9	51.7
	85	100.2	100.2	104.2	93.9	115.0	73.2	93.1	93.1	95.5	89.7	105.3	69.1
	90	106.2	106.2	106.4	106.4	115.4	90.6	98.8	98.8	99.0	99.0	105.7	86.5
3600	75	94.3	86.1	104.8	63.2	115.6	38.9	86.2	81.7	95.7	59.1	105.5	34.8
	80	97.8	97.8	105.2	82.8	116.1	58.7	90.5	90.5	96.1	78.6	106.1	54.6
	85	104.0	104.0	106.1	101.5	116.5	78.3	96.4	96.4	97.2	97.1	106.5	74.2
	90	110.2	110.2	110.4	110.4	117.0	97.9	102.3	102.3	102.4	102.4	107.0	93.8
4000	75	95.8	91.9	105.9	66.6	116.7	39.7	87.4	87.4	96.5	62.4	106.3	35.5
	80	100.7	100.7	106.5	88.3	117.3	61.6	93.0	93.0	97.1	83.2	106.9	57.4
	85	107.2	107.2	107.9	107.9	117.7	83.4	99.1	99.1	99.3	99.3	107.3	79.2
	90	113.6	113.6	113.8	113.8	118.4	104.2	105.2	105.2	105.3	105.3	108.2	99.8
4400	75	97.1	97.1	106.8	69.9	117.5	40.4	88.7	88.7	97.2	65.6	106.8	36.2
	80	103.2	103.2	107.5	92.9	118.1	64.5	95.1	95.1	98.0	88.3	107.5	60.2
	85	109.9	109.9	109.9	109.9	118.6	88.5	101.4	101.4	101.5	101.5	108.0	84.2
	90	116.5	116.5	116.6	116.6	119.6	111.2	107.6	107.6	107.7	107.7	109.2	106.7
4800	75	98.4	98.4	107.5	73.2	118.1	41.1	90.4	90.4	97.6	68.9	107.2	36.8
	80	105.3	105.3	108.4	98.1	118.8	67.4	96.9	96.9	98.7	93.4	108.0	63.1
	85	112.1	112.1	112.3	112.3	119.4	93.5	103.3	103.3	103.4	103.4	108.6	89.3
	90	118.9	118.9	119.1	119.1	120.7	118.2	109.6	109.6	109.8	109.8	110.2	110.2

Notes:

1. All capacities shown are gross and have not considered indoor fan heat. To obtain **NET** cooling capacity subtract indoor fan heat. For indoor fan heat formula, refer to appropriate airflow table notes.
2. MBh = Total Gross Capacity
3. SHC = Sensible Heat Capacity

Evaporator Fan Performance

Table 34. Multispeed direct drive evaporator fan performance (standard motor) 3 to 5 tons - no electric heat WSC036/048/060H3,4,W

			External Static Pressure (in./water) and Motor Power (Bhp)														
			Speed Set 1			Speed Set 2			Speed Set 3			Speed Set 4			Speed Set 5		
Tons	Unit Model Number	cfm	ESP	rpm	Bhp	ESP	rpm	Bhp	ESP	rpm	Bhp	ESP	rpm	Bhp	ESP	rpm	Bhp
3	WSC036H3,4,W Downflow Airflow	960	0.502	738	0.20	0.767	850	0.29	0.987	943	0.38	1.190	1029	0.47	-	-	-
		1020	0.419	717	0.19	0.683	829	0.28	0.904	923	0.37	1.107	1009	0.46	-	-	-
		1080	0.335	696	0.19	0.600	808	0.28	0.820	902	0.36	1.023	988	0.45	-	-	-
		1140	0.252	675	0.18	0.516	787	0.27	0.737	881	0.35	0.940	967	0.44	-	-	-
		1200	0.168	654	0.18	0.433	766	0.26	0.653	860	0.34	0.856	946	0.43	1.174	1080	0.58
		1260	0.084	633	0.17	0.349	746	0.25	0.570	839	0.34	0.773	925	0.42	1.090	1060	0.57
		1320	0.001	612.5	0.16	0.266	725	0.25	0.486	818	0.33	0.689	904	0.41	1.006	1039	0.56
		1380	-	-	-	0.182	704	0.24	0.403	797	0.32	0.605	883	0.40	0.923	1018	0.55
		1440	-	-	-	0.098	683	0.23	0.319	776	0.31	0.522	862	0.39	0.839	997	0.54
3	WSC036H3,4,WH orizontal Airflow	960	0.457	703	0.19	0.718	815	0.28	0.936	908	0.36	1.136	994	0.45	-	-	-
		1020	0.379	682	0.18	0.640	794	0.27	0.858	886	0.35	1.058	973	0.44	-	-	-
		1080	0.301	661	0.18	0.562	772	0.26	0.780	864	0.35	0.980	951	0.43	-	-	-
		1140	0.224	639	0.17	0.485	751	0.26	0.702	842	0.34	0.902	930	0.42	-	-	-
		1200	0.146	618	0.17	0.407	729	0.25	0.624	820	0.33	0.824	908	0.41	1.138	1042	0.56
		1260	0.068	596	0.16	0.329	708	0.24	0.546	798	0.32	0.746	887	0.40	1.060	1021	0.55
		1320	-	-	-	0.251	687	0.23	0.468	776	0.31	0.668	865	0.39	0.982	1000	0.54
		1380	-	-	-	0.173	665	0.23	0.390	754	0.30	0.591	844	0.38	0.904	978	0.53
		1440	-	-	-	0.095	644	0.22	0.312	731	0.29	0.513	823	0.37	0.826	957	0.52
4	WSC048H3,4,W Downflow Airflow	1280	0.72	918	0.38	0.96	1010	0.49	1.14	1077	0.58	-	-	-	-	-	-
		1360	0.57	885	0.37	0.82	977	0.47	1.00	1045	0.56	-	-	-	-	-	-
		1440	0.42	852	0.35	0.67	945	0.46	0.85	1012	0.54	-	-	-	-	-	-
		1520	0.27	819	0.34	0.52	912	0.44	0.70	979	0.52	1.13	1139	0.75	-	-	-
		1600	0.12	787	0.33	0.37	879	0.43	0.55	946	0.51	0.98	1106	0.72	1.19	1186	0.85
		1680	-	-	-	0.22	847	0.41	0.40	914	0.49	0.83	1073	0.70	1.05	1153	0.82
		1760	-	-	-	0.07	814	0.40	0.25	881	0.47	0.68	1040	0.68	0.90	1120	0.80
		1840	-	-	-	-	-	-	0.11	848	0.45	0.53	1008	0.66	0.75	1088	0.78
		1920	-	-	-	-	-	-	-	-	-	0.39	975	0.64	0.60	1055	0.75
4	WSC048H3,4,WH orizontal Airflow	1280	0.68	881	0.37	0.90	972	0.47	1.06	1038	0.56	-	-	-	-	-	-
		1360	0.56	849	0.35	0.78	940	0.46	0.94	1006	0.54	-	-	-	-	-	-
		1440	0.44	817	0.34	0.66	908	0.44	0.82	974	0.52	-	-	-	-	-	-
		1520	0.33	785	0.33	0.55	876	0.43	0.71	942	0.50	1.09	1099	0.72	-	-	-
		1600	0.21	754	0.31	0.43	845	0.41	0.59	911	0.49	0.97	1067	0.70	1.16	1146	0.82
		1680	0.09	722	0.30	0.31	813	0.39	0.47	879	0.47	0.85	1036	0.68	1.04	1114	0.80
		1760	-	-	-	0.19	781	0.38	0.35	847	0.45	0.73	1004	0.66	0.92	1082	0.77
		1840	-	-	-	0.07	749	0.36	0.23	815	0.44	0.61	972	0.64	0.80	1051	0.75
		1920	-	-	-	-	-	-	0.12	784	0.42	0.50	941	0.62	0.69	1019	0.73
5	WSC060H3,4,W Downflow Airflow	1600	0.87	830	0.46	1.00	909	0.53	1.20	996	0.64	-	-	-	-	-	-
		1700	0.73	795	0.44	0.86	873	0.51	1.05	960	0.62	-	-	-	-	-	-
		1800	0.59	759	0.42	0.72	837	0.49	0.91	924	0.59	1.12	1011	0.71	-	-	-
		1900	0.44	723	0.40	0.57	802	0.47	0.77	889	0.57	0.97	975	0.68	-	-	-
		2000	0.30	687	0.38	0.43	766	0.45	0.62	853	0.55	0.83	940	0.66	1.20	1086	0.88
		2100	0.16	651	0.36	0.29	730	0.43	0.48	817	0.52	0.69	904	0.63	1.05	1050	0.85
		2200	0.01	616	0.34	0.14	694	0.41	0.34	781	0.50	0.54	868	0.61	0.91	1014	0.82
		2300	-	-	-	0.00	658	0.39	0.19	745	0.48	0.40	832	0.58	0.77	979	0.79
		2400	-	-	-	-	-	-	0.05	710	0.46	0.26	796	0.56	0.62	943	0.76
5	WSC060H3,4,WH orizontal Airflow	1600	0.74	778	0.32	0.84	846	0.41	0.97	919	0.49	1.12	992	0.65	-	-	-
		1700	0.62	742	0.31	0.71	809	0.39	0.85	883	0.47	0.99	956	0.63	-	-	-
		1800	0.49	706	0.29	0.58	773	0.38	0.72	846	0.45	0.86	920	0.60	1.12	1042	0.84
		1900	0.36	669	0.28	0.45	737	0.36	0.59	810	0.43	0.74	883	0.58	0.99	1006	0.81
		2000	0.23	633	0.26	0.32	700	0.34	0.46	774	0.41	0.61	847	0.55	0.87	970	0.78
		2100	0.10	596	0.25	0.20	664	0.32	0.33	737	0.39	0.48	810	0.53	0.74	933	0.75
		2200	-	-	-	0.07	628	0.30	0.21	701	0.38	0.35	774	0.51	0.61	897	0.72
		2300	-	-	-	-	-	-	0.08	665	0.36	0.22	738	0.48	0.48	861	0.69
		2400	-	-	-	-	-	-	-	-	-	0.10	701	0.46	0.35	824	0.66

Notes:

1. For 036 models, fan motor heat (MBh) = 2.72 x Fan Bhp + 0.16. For 048 and 060 models, fan motor heat (MBh) = 2.87 x Fan Bhp + 0.15.
2. Factory supplied motors, in commercial equipment, are definite purpose motors, specifically designed and tested to operate reliably and continuously at all cataloged conditions. Using the full horsepower range of our fan motors as shown in our tabular data will not result in nuisance tripping or premature motor failure. Our product's warranty will not be affected.
3. For electric heat applications minimum airflow is set to 320 cfm/ton, unless specified otherwise, values found in electric heat temp rise table.
4. Data includes pressure drop due to wet coil and filters.

Table 35. Multispeed direct drive evaporator fan performance (oversized motor) 3 to 5 tons - no electric heat WSC036/048/060H3,4,W

Tons	Unit Model Number	cfm	External Static Pressure (in./water) and Motor Power (Bhp)														
			Speed Set 1			Speed Set 2			Speed Set 3			Speed Set 4			Speed Set 5		
			ESP	rpm	Bhp	ESP	rpm	Bhp	ESP	rpm	Bhp	ESP	rpm	Bhp	ESP	rpm	Bhp
3	WSC036H3,4,W Downflow Airflow	960	1.15	963	0.44	-	-	-	-	-	-	-	-	-	-	-	-
		1020	1.06	942	0.43	-	-	-	-	-	-	-	-	-	-	-	-
		1080	0.97	921	0.42	1.51	1157	0.69	-	-	-	-	-	-	-	-	-
		1140	0.88	900	0.41	1.42	1133	0.67	-	-	-	-	-	-	-	-	-
		1200	0.79	879	0.40	1.33	1109	0.66	1.45	1155	0.73	-	-	-	-	-	-
		1260	0.70	859	0.39	1.24	1086	0.65	1.36	1131	0.71	-	-	-	-	-	-
		1320	0.61	838	0.38	1.15	1062	0.63	1.28	1107	0.70	1.49	1184	0.81	-	-	-
		1380	0.52	817	0.37	1.06	1038	0.62	1.19	1084	0.68	1.40	1160	0.79	1.51	1201	0.86
		1440	0.43	796	0.36	0.97	1015	0.60	1.10	1060	0.67	1.31	1136	0.78	1.42	1177	0.84
3	WSC036H3,4,WH orizontal Airflow	960	1.14	1111	0.50	1.50	1164	0.69	-	-	-	-	-	-	-	-	-
		1020	1.06	1088	0.49	1.43	1141	0.68	-	-	-	-	-	-	-	-	-
		1080	0.99	1065	0.48	1.35	1118	0.67	1.44	1131	0.71	-	-	-	-	-	-
		1140	0.91	1042	0.47	1.28	1095	0.65	1.36	1108	0.70	1.50	1128	0.77	-	-	-
		1200	0.84	1019	0.46	1.20	1072	0.64	1.29	1085	0.68	1.43	1105	0.76	1.50	1117	0.80
		1260	0.76	996	0.45	1.13	1049	0.62	1.21	1062	0.67	1.35	1082	0.74	1.43	1093	0.78
		1320	0.69	973	0.44	1.05	1026	0.61	1.14	1038	0.65	1.28	1059	0.72	1.35	1070	0.76
		1380	0.61	950	0.43	0.98	1003	0.60	1.06	1015	0.64	1.20	1036	0.71	1.28	1047	0.75
		1440	0.54	927	0.42	0.90	980	0.58	0.99	992	0.62	1.13	1013	0.69	1.20	1024	0.73
4	WSC048H3,4,W Downflow Airflow	1280	1.12	1016	0.58	1.50	1159	0.78	-	-	-	-	-	-	-	-	-
		1360	1.00	988	0.56	1.39	1131	0.76	-	-	-	-	-	-	-	-	-
		1440	0.88	961	0.55	1.27	1104	0.74	-	-	-	-	-	-	-	-	-
		1520	0.77	933	0.53	1.15	1076	0.73	-	-	-	-	-	-	-	-	-
		1600	0.65	905	0.52	1.04	1048	0.71	1.50	1218	0.97	-	-	-	-	-	-
		1680	0.54	877	0.50	0.92	1020	0.69	1.38	1190	0.95	-	-	-	-	-	-
		1760	0.42	850	0.49	0.81	993	0.67	1.26	1162	0.93	-	-	-	-	-	-
		1840	0.30	822	0.47	0.69	965	0.65	1.15	1134	0.90	1.50	1266	1.13	-	-	-
		1920	0.19	794	0.45	0.57	937	0.63	1.03	1107	0.88	1.39	1238	1.10	1.50	1279	1.18
4	WSC048H3,4,WH orizontal Airflow	1280	1.04	1077	0.62	1.30	1121	0.76	-	-	-	-	-	-	-	-	-
		1360	0.94	1047	0.60	1.20	1091	0.74	-	-	-	-	-	-	-	-	-
		1440	0.84	1016	0.58	1.10	1061	0.72	1.41	1287	1.03	-	-	-	-	-	-
		1520	0.74	986	0.56	1.00	1030	0.70	1.31	1257	1.00	-	-	-	-	-	-
		1600	0.64	956	0.55	0.90	1000	0.67	1.21	1226	0.98	1.45	1340	1.20	-	-	-
		1680	0.54	925	0.53	0.80	970	0.65	1.11	1196	0.95	1.35	1310	1.17	1.43	1346	1.24
		1760	0.44	895	0.51	0.70	939	0.63	1.01	1166	0.93	1.25	1280	1.14	1.33	1315	1.21
		1840	0.34	865	0.49	0.60	909	0.61	0.91	1135	0.91	1.15	1249	1.11	1.23	1285	1.18
		1920	0.24	834	0.48	0.50	879	0.59	0.81	1105	0.88	1.05	1219	1.09	1.13	1255	1.16
5	WSC060H3,4,W Downflow Airflow	1600	1.23	905	0.52	1.50	1048	0.71	-	-	-	-	-	-	-	-	-
		1700	1.08	870	0.50	1.35	1014	0.68	-	-	-	-	-	-	-	-	-
		1800	0.94	836	0.48	1.21	979	0.66	-	-	-	-	-	-	-	-	-
		1900	0.79	801	0.46	1.06	944	0.64	1.50	1113	0.89	-	-	-	-	-	-
		2000	0.65	766	0.44	0.92	909	0.61	1.35	1079	0.86	1.50	1210	1.08	-	-	-
		2100	0.50	732	0.42	0.77	875	0.59	1.21	1044	0.83	1.36	1176	1.05	-	-	-
		2200	0.36	697	0.40	0.63	840	0.57	1.06	1009	0.80	1.21	1141	1.02	1.50	1182	0.84
		2300	0.21	662	0.38	0.48	805	0.54	0.92	975	0.78	1.07	1106	0.99	1.36	1147	1.06
		2400	0.07	628	0.36	0.34	771	0.52	0.77	940	0.75	0.92	1072	0.96	1.21	1113	1.03
5	WSC060H3,4,WH orizontal Airflow	1600	1.03	1075	0.61	1.21	1119	0.75	1.51	1316	1.05	-	-	-	-	-	-
		1700	0.91	1037	0.59	1.09	1081	0.73	1.38	1278	1.02	1.49	1350	1.20	-	-	-
		1800	0.78	999	0.57	0.96	1043	0.70	1.26	1240	0.99	1.36	1312	1.17	-	-	-
		1900	0.66	961	0.55	0.84	1005	0.68	1.13	1202	0.96	1.24	1274	1.14	1.43	1347	1.24
		2000	0.53	923	0.53	0.71	967	0.65	1.01	1164	0.93	1.11	1236	1.10	1.31	1309	1.21
		2100	0.41	885	0.51	0.59	929	0.63	0.88	1126	0.90	0.99	1198	1.07	1.18	1271	1.17
		2200	0.28	847	0.48	0.46	891	0.60	0.76	1088	0.87	0.86	1160	1.04	1.06	1233	1.14
		2300	0.16	809	0.46	0.34	853	0.58	0.63	1050	0.84	0.74	1122	1.00	0.93	1195	1.10
		2400	0.03	771	0.44	0.21	816	0.55	0.51	1013	0.81	0.61	1084	0.97	0.81	1157	1.07

Notes:

1. For 036 models, fan motor heat (MBh) = 2.72 x Fan Bhp + 0.16. For 048 and 060 models, fan motor heat (MBh) = 2.87 x Fan Bhp + 0.15.
2. Factory supplied motors, in commercial equipment, are definite purpose motors, specifically designed and tested to operate reliably and continuously at all cataloged conditions. Using the full horsepower range of our fan motors as shown in our tabular data will not result in nuisance tripping or premature motor failure. Our product's warranty will not be affected.
3. For electric heat applications minimum airflow is set to 320 cfm/ton, unless specified otherwise, values found in electric heat temp rise table.
4. Data includes pressure drop due to wet coil and filters.

Evaporator Fan Performance

Table 36. Belt drive evaporator fan performance - 7.5 tons standard efficiency - WSC092H3,H4,HW downflow airflow

External Static Pressure (Inches of Water Gauge)																				
	.10”		.20”		.30”		.40”		.50”		.60”		.70”		.80”		.90”		1.00”	
cfm	rpm	bhp	rpm	bhp	rpm	bhp	rpm	bhp	rpm	bhp	rpm	bhp	rpm	bhp	rpm	bhp	rpm	bhp	rpm	bhp
	1-hp Standard Motor and Field Supplied Low Static Drive[a]										1-hp Standard Motor and Drive									
2400	—	—	474	0.36	524	0.44	570	0.52	611	0.59	650	0.68	686	0.76	720	0.84	752	0.93	783	1.02
2700	458	0.39	508	0.47	554	0.55	598	0.64	638	0.73	676	0.82	711	0.91	745	1.00	776	1.09	806	1.19
3000	498	0.52	544	0.60	587	0.69	628	0.78	666	0.88	704	0.98	738	1.08	770	1.18	801	1.28	831	1.38
3300	539	0.67	581	0.76	621	0.85	660	0.96	696	1.06	732	1.17	766	1.28	797	1.39	828	1.49	856	1.60
3600	580	0.85	620	0.95	657	1.05	693	1.16	728	1.27	761	1.38	794	1.50	825	1.62	855	1.74	882	1.85
															3-hp Oversized Motor and Drive[b]					
External Static Pressure (Inches of Water Gauge)																				
	1.10”		1.20”		1.30”		1.40”		1.50”		1.60”		1.70”		1.80”		1.90”		2.00”	
cfm	rpm	bhp	rpm	bhp	rpm	bhp	rpm	bhp	rpm	bhp	rpm	bhp	rpm	bhp	rpm	bhp	rpm	bhp	rpm	bhp
	1-hp Standard Motor and Drive										3-hp Oversized Motor and Drive[b]									
2400	813	1.10	841	1.19	868	1.28	894	1.37	920	1.46	943	1.54	967	1.63	990	1.72	1012	1.81	1035	1.90
2700	836	1.29	864	1.39	891	1.48	917	1.58	942	1.68	966	1.78	990	1.88	1012	1.97	1035	2.07	1056	2.17
3000	860	1.49	887	1.60	914	1.70	940	1.81	964	1.92	988	2.03	1012	2.13	1035	2.24	1056	2.35	1079	2.46
3300	885	1.72	911	1.83	938	1.94	963	2.06	988	2.18	1012	2.30	1035	2.42	1057	2.54	1079	2.65	1100	2.77
3600	910	1.97	937	2.09	963	2.22	988	2.34	1012	2.46	1035	2.59	1059	2.72	1081	2.85	1104	2.98	1124	3.11
									3-hp Oversized Motor and Drive and Field Supplied High Static Drive[c]											

Notes:

1. For standard evaporator fan speed (rpm), reference the standard motor and sheave/fan speed applicable table in the fan performance section.
2. Data includes pressure drop due to standard filters and wet coils. No accessories or options are included in pressure drop data.
3. To determine static pressure drop due to other options/accessories, refer to the applicable table in the fan performance section.
4. 1-hp fan motor heat (MBh) = 2.829 x fan bhp +.4024. 3-hp fan motor heat (MBh) = 2.900 x Fan bhp -.3800
5. Factory supplied motors, in commercial equipment, are definite purpose motors, specifically designed and tested to operate reliably and continuously at all cataloged conditions. Using the full horsepower range of our fan motors as shown in our tabular data will not result in nuisance tripping or premature motor failure. Our product's warranty will not be affected.

(a) BAYLSDR009A
(b) BAYHSMT400A
(c) Field Supplied AK56 x 1 in. fan sheave required.

Table 37. Belt drive evaporator fan performance - 7.5 tons standard efficiency - WSC092H3,H4,HW horizontal airflow

External Static Pressure (Inches of Water Gauge)																				
	.10”		.20”		.30”		.40”		.50”		.60”		.70”		.80”		.90”		1.00”	
cfm	rpm	bhp	rpm	bhp	rpm	bhp	rpm	bhp	rpm	bhp	rpm	bhp	rpm	bhp	rpm	bhp	rpm	bhp	rpm	bhp
	1-hp Standard Motor and Field Supplied Low Static Drive[a]								1-hp Standard Motor and Drive											
2400	478	0.36	528	0.43	576	0.52	626	0.62	681	0.75	731	0.88	778	1.02	821	1.15	862	1.29	901	1.43
2700	526	0.49	570	0.57	614	0.66	656	0.76	701	0.88	751	1.02	797	1.17	840	1.32	880	1.47	920	1.63
3000	575	0.65	615	0.74	655	0.84	694	0.94	731	1.05	770	1.17	817	1.34	859	1.50	900	1.67	938	1.83
3300	624	0.84	661	0.94	698	1.04	734	1.15	768	1.27	802	1.39	838	1.52	878	1.69	919	1.87	957	2.05
3600	675	1.07	709	1.17	742	1.28	776	1.41	809	1.53	840	1.65	871	1.79	903	1.92	939	2.10	977	2.29
											3-hp Oversized Motor and Drive[b]									

External Static Pressure (Inches of Water Gauge)																				
	1.10”		1.20”		1.30”		1.40”		1.50”		1.60”		1.70”		1.80”		1.90”		2.00”	
cfm	rpm	bhp	rpm	bhp	rpm	bhp	rpm	bhp	rpm	bhp	rpm	bhp	rpm	bhp	rpm	bhp	rpm	bhp	rpm	bhp
	3-hp Oversized Motor and Drive[b]																			
2400	938	1.57	973	1.71	1007	1.86	1038	1.99	1070	2.14	1101	2.29	1130	2.44	1159	2.59	1187	2.74	1214	2.89
2700	956	1.78	991	1.93	1024	2.08	1057	2.25	1088	2.40	1119	2.56	1149	2.73	1177	2.89	1206	3.06	1233	3.22
3000	975	2.00	1009	2.16	1044	2.34	1075	2.51	1108	2.69	1138	2.86	1167	3.03	1195	3.21	1222	3.38	—	—
3300	994	2.24	1028	2.42	1063	2.61	1094	2.79	1126	2.98	1155	3.16	1185	3.35	—	—	—	—	—	—
3600	1013	2.49	1048	2.69	1081	2.88	1114	3.09	1145	3.29	—	—	—	—	—	—	—	—	—	—
							3-hp Oversized Motor and Field Supplied High Static Drive[c]													

Notes:

1. For standard evaporator fan speed (rpm), reference the standard motor and sheave/fan speed applicable table in the fan performance section.
2. Data includes pressure drop due to standard filters and wet coils. No accessories or options are included in pressure drop data.
3. To determine static pressure drop due to other options/accessories, refer to the applicable table in the fan performance section.
4. 1-hp fan motor heat (MBh) = 2.829 x fan bhp +.4024. 3-hp fan motor heat (MBh) = 2.900 x Fan bhp -.3800.
5. Factory supplied motors, in commercial equipment, are definite purpose motors, specifically designed and tested to operate reliably and continuously at all cataloged conditions. Using the full horsepower range of our fan motors as shown in our tabular data will not result in nuisance tripping or premature motor failure. Our product's warranty will not be affected.

(a) BAYLSDR009A
(b) BAYHSMT400A
(c) Field Supplied AK56 x 1 in. fan sheave required.

Table 38. Direct drive evaporator fan performance - 7.5 tons standard efficiency Title 24 single zone VAV - WSC092H3,H4,HW downflow airflow

External Static Pressure (Inches of Water Gauge)																				
	.10”		.20”		.30”		.40”		.50”		.60”		.70”		.80”		.90”		1.00”	
cfm	rpm	bhp	rpm	bhp	rpm	bhp	rpm	bhp	rpm	bhp	rpm	bhp	rpm	bhp	rpm	bhp	rpm	bhp	rpm	bhp
2400	713	0.21	763	0.26	807	0.32	851	0.39	892	0.45	924	0.50	957	0.56	991	0.62	1024	0.68	1054	0.74
2700	792	0.28	834	0.34	880	0.41	914	0.47	955	0.54	992	0.62	1023	0.68	1051	0.74	1081	0.81	1112	0.88
3000	871	0.36	908	0.43	949	0.51	987	0.58	1018	0.65	1054	0.73	1090	0.81	1120	0.89	1145	0.96	1171	1.02
3300	950	0.47	985	0.54	1020	0.62	1058	0.71	1090	0.79	1118	0.86	1151	0.95	1184	1.04	1214	1.13	1240	1.21
3600	1030	0.60	1062	0.67	1094	0.76	1128	0.84	1162	0.94	1191	1.03	1216	1.10	1245	1.20	1276	1.30	1305	1.40
External Static Pressure (Inches of Water Gauge)																				
	1.10”		1.20”		1.30”		1.40”		1.50”		1.60”		1.70”		1.80”		1.90”		2.00”	
cfm	rpm	bhp	rpm	bhp	rpm	bhp	rpm	bhp	rpm	bhp	rpm	bhp	rpm	bhp	rpm	bhp	rpm	bhp	rpm	bhp
2400	1084	0.79	1113	0.85	1141	0.90	1168	0.95	1194	1.00	1218	1.05	1243	1.10	1267	1.14	1290	1.19	1314	1.23
2700	1140	0.94	1169	1.01	1195	1.07	1222	1.13	1248	1.20	1273	1.25	1296	1.31	1321	1.37	1343	1.43	1366	1.48
3000	1198	1.10	1225	1.18	1252	1.25	1278	1.32	1303	1.40	1328	1.47	1351	1.54	1375	1.61	1398	1.67	1419	1.74
3300	1262	1.28	1285	1.35	1309	1.43	1335	1.52	1360	1.60	1384	1.69	1407	1.77	1429	1.84	1452	1.92	1475	2.00
3600	1331	1.49	1355	1.58	1375	1.65	1396	1.74	1418	1.82	1441	1.91	1464	2.01	1487	2.10	1509	2.19	1530	2.27

Notes:

1. For direct drive fan speed (rpm), reference the applicable table in the fan performance section.
2. Data includes pressure drop due to standard filters and wet coils. No accessories or options are included in pressure drop data.
3. To determine static pressure drop due to other options/accessories, refer to the applicable table in the fan performance section.
4. Direct drive fan motor heat (MBh) = 2.7912 x fan bhp + 0.1388.
5. Factory supplied motors, in commercial equipment, are definite purpose motors, specifically designed and tested to operate reliably and continuously at all cataloged conditions. Using the full horsepower range of our fan motors as shown in our tabular data will not result in nuisance tripping or premature motor failure. Our product's warranty will not be affected.

Table 39. Direct drive evaporator fan performance - 7.5 tons standard efficiency Title 24 single zone VAV - WSC092H3,H4,HW horizontal airflow

External Static Pressure (Inches of Water Gauge)																				
	.10”		.20”		.30”		.40”		.50”		.60”		.70”		.80”		.90”		1.00”	
cfm	rpm	bhp	rpm	bhp	rpm	bhp	rpm	bhp	rpm	bhp	rpm	bhp	rpm	bhp	rpm	bhp	rpm	bhp	rpm	bhp
2400	720	0.21	769	0.27	817	0.33	856	0.39	894	0.44	929	0.50	964	0.56	997	0.62	1028	0.69	1060	0.75
2700	800	0.29	841	0.34	888	0.42	927	0.48	962	0.55	995	0.61	1027	0.67	1058	0.74	1088	0.81	1118	0.88
3000	880	0.38	917	0.44	956	0.51	999	0.59	1032	0.67	1063	0.74	1094	0.81	1123	0.88	1151	0.95	1178	1.02
3300	961	0.49	994	0.55	1028	0.63	1067	0.72	1104	0.80	1133	0.88	1162	0.96	1190	1.04	1218	1.12	1243	1.19
3600	1042	0.62	1073	0.69	1104	0.77	1136	0.85	1173	0.95	1205	1.05	1233	1.13	1259	1.22	1285	1.30	1310	1.39
External Static Pressure (Inches of Water Gauge)																				
	1.10”		1.20”		1.30”		1.40”		1.50”		1.60”		1.70”		1.80”		1.90”		2.00”	
cfm	rpm	bhp	rpm	bhp	rpm	bhp	rpm	bhp	rpm	bhp	rpm	bhp	rpm	bhp	rpm	bhp	rpm	bhp	rpm	bhp
2400	1090	0.82	1119	0.89	1147	0.96	1174	1.03	1200	1.10	1226	1.18	1251	1.25	1276	1.33	1299	1.41	1323	1.49
2700	1147	0.95	1175	1.02	1202	1.10	1228	1.17	1254	1.25	1279	1.33	1304	1.41	1327	1.49	1350	1.57	1374	1.66
3000	1206	1.10	1233	1.18	1259	1.26	1285	1.34	1309	1.42	1333	1.50	1359	1.59	1381	1.67	1405	1.76	1427	1.85
3300	1269	1.27	1294	1.35	1320	1.44	1344	1.52	1367	1.61	1391	1.70	1414	1.78	1438	1.88	1460	1.97	1482	2.06
3600	1335	1.48	1359	1.56	1382	1.64	1405	1.73	1428	1.82	1451	1.91	1473	2.01	1496	2.10	1518	2.20	1538	2.29

Notes:

1. For direct drive evaporator fan speed (rpm), refer to the applicable table in the fan performance section.
2. Data includes pressure drop due to standard filters and wet coils.
3. To determine static pressure drop due to other options/accessories, refer to the applicable table in the fan performance section.
4. Direct drive fan motor heat (MBh) = 2.7912 x fan bhp + 0.1388.
5. Factory supplied motors, in commercial equipment, are definite purpose motors, specifically designed and tested to operate reliably and continuously at all cataloged conditions. Using the full horsepower range of our fan motors as shown in our tabular data will not result in nuisance tripping or premature motor failure. Our product's warranty will not be affected.

Evaporator Fan Performance

Table 40. Belt drive evaporator fan performance - 8.5 tons standard efficiency - WSC102H3,H4,HW downflow airflow

External Static Pressure (Inches of Water)																				
	.10”		.20”		.30”		.40”		.50”		.60”		.70”		.80”		.90”		1.00”	
cfm	rpm	bhp	rpm	bhp	rpm	bhp	rpm	bhp	rpm	bhp	rpm	bhp	rpm	bhp	rpm	bhp	rpm	bhp	rpm	bhp
	2-hp Standard Motor and Field Supplied Low Static Drive[a]																			
2720	-	-	519	0.43	563	0.50	603	0.57	644	0.65	681	0.73	716	0.81	749	0.88	780	0.96	809	1.03
3060	513	0.48	558	0.56	604	0.65	640	0.73	676	0.81	713	0.90	747	0.99	779	1.07	810	1.16	840	1.25
3400	558	0.63	600	0.72	643	0.82	681	0.92	714	1.00	745	1.09	779	1.19	811	1.29	841	1.39	870	1.49
3740	605	0.82	645	0.92	683	1.02	722	1.13	754	1.24	783	1.33	811	1.42	842	1.53	872	1.64	901	1.75
4080	654	1.04	691	1.16	724	1.26	760	1.38	795	1.50	824	1.61	851	1.71	876	1.81	904	1.92	932	2.04
									2-hp Standard Motor and Drive											

External Static Pressure (Inches of Water)																				
	1.10”		1.20”		1.30”		1.40”		1.50”		1.60”		1.70”		1.80”		1.90”		2.00”	
cfm	rpm	bhp	rpm	bhp	rpm	bhp	rpm	bhp	rpm	bhp	rpm	bhp	rpm	bhp	rpm	bhp	rpm	bhp	rpm	bhp
	2-hp Standard Motor and Drive																			
2720	838	1.11	865	1.18	891	1.26	916	1.33	940	1.40	963	1.47	986	1.54	1008	1.61	1030	1.69	1051	1.76
3060	867	1.33	893	1.41	919	1.50	945	1.59	968	1.66	992	1.75	1014	1.83	1037	1.91	1058	2.00	1079	2.08
3400	897	1.58	923	1.68	949	1.77	974	1.87	997	1.96	1020	2.05	1044	2.15	1065	2.24	1087	2.33	1107	2.42
3740	928	1.86	954	1.96	980	2.07	1003	2.18	1027	2.28	1050	2.39	1072	2.49	1094	2.59	1115	2.70	1136	2.80
4080	959	2.16	985	2.29	1010	2.40	1034	2.52	1058	2.64	1079	2.75	1102	2.87	1124	2.98	1145	3.10	1165	3.21
									3-hp Oversized Motor and Drive[b]											

Notes:

1. For standard evaporator fan speed (rpm), reference the standard motor and sheave/fan speed applicable table in the fan performance section.
2. Data includes pressure drop due to standard filters and wet coils.
3. To determine static pressure drop due to other options/accessories, refer to the applicable table in the fan performance section.
4. 1-hp fan motor heat (MBh) = 2.829 x fan bhp + .4024. 2-hp fan motor heat (MBh) = 2.000 x fan bhp +.5000. 3-hp fan motor heat (MBh) = 2.900 x fan bhp +.4750
5. Factory supplied motors, in commercial equipment, are definite purpose motors, specifically designed and tested to operate reliably and continuously at all cataloged conditions. Using the full horsepower range of our fan motors as shown in our tabular data will not result in nuisance tripping or premature motor failure. Our product's warranty will not be affected.
6. For electric heat applications, minimum airflow is set to 320 cfm/ton, unless specified otherwise, values found in electric heat temperature rise table.

(a) BAYLSDR009A
(b) BAYHSMT097A

Table 41. Belt drive evaporator fan performance - 8.5 tons standard efficiency - WSC102H3,H4,HW horizontal airflow

External Static Pressure (Inches of Water)																				
	.10”		.20”		.30”		.40”		.50”		.60”		.70”		.80”		.90”		1.00”	
cfm	rpm	bhp	rpm	bhp	rpm	bhp	rpm	bhp	rpm	bhp	rpm	bhp	rpm	bhp	rpm	bhp	rpm	bhp	rpm	bhp
	2-hp Standard Motor and Field Supplied Low Static Drive Accessory Kit[a]																			
2720	523	0.43	571	0.50	619	0.59	676	0.69	721	0.80	759	0.90	795	1.00	830	1.10	862	1.20	893	1.30
3060	578	0.59	625	0.68	659	0.75	706	0.86	757	0.98	800	1.10	834	1.21	866	1.33	899	1.44	929	1.55
3400	633	0.79	673	0.88	710	0.97	744	1.07	788	1.19	833	1.32	874	1.46	907	1.58	937	1.71	967	1.84
3740	690	1.03	723	1.12	764	1.24	791	1.33	825	1.44	864	1.57	907	1.72	945	1.87	979	2.02	1007	2.15
4080	747	1.31	777	1.41	812	1.53	844	1.65	869	1.75	901	1.87	938	2.02	976	2.18	1013	2.35	1048	2.51
			2-hp Standard Motor and Drive																	

External Static Pressure (Inches of Water)																				
	1.10”		1.20”		1.30”		1.40”		1.50”		1.60”		1.70”		1.80”		1.90”		2.00”	
cfm	rpm	bhp	rpm	bhp	rpm	bhp	rpm	bhp	rpm	bhp	rpm	bhp	rpm	bhp	rpm	bhp	rpm	bhp	rpm	bhp
	2-hp Standard Motor and Drive																			
2720	924	1.40	952	1.50	980	1.60	1006	1.70	1032	1.81	1057	1.91	1081	2.01	1105	2.11	1127	2.21	1150	2.31
3060	959	1.66	987	1.77	1014	1.89	1041	2.01	1066	2.11	1091	2.23	1115	2.34	1138	2.46	1161	2.57	1184	2.69
3400	995	1.96	1024	2.09	1051	2.21	1077	2.34	1102	2.46	1126	2.59	1150	2.72	1173	2.84	1196	2.97	1217	3.09
3740	1034	2.29	1060	2.43	1087	2.57	1113	2.71	1138	2.84	1162	2.98	1185	3.12	1208	3.25	1230	3.39	-	-
4080	1076	2.66	1101	2.81	1126	2.96	1150	3.11	1175	3.26	1198	3.41	-	-	-	-	-	-	-	-
	3-hp Oversized Motor and Drive[b]																			

Notes:

1. For standard evaporator fan speed (rpm), reference the standard motor and sheave/fan speed applicable table in the fan performance section.
2. Data includes pressure drop due to standard filters and wet coils.
3. To determine static pressure drop due to other options/accessories, refer to the applicable table in the fan performance section.
4. 1-hp fan motor heat (MBh) = 2.829 x fan bhp + .4024. 2-hp fan motor heat (MBh) = 2.000 x fan bhp +.5000. 3-hp fan motor heat (MBh) = 2.900 x fan bhp +.4750
5. Factory supplied motors, in commercial equipment, are definite purpose motors, specifically designed and tested to operate reliably and continuously at all cataloged conditions. Using the full horsepower range of our fan motors as shown in our tabular data will not result in nuisance tripping or premature motor failure. Our product's warranty will not be affected.
6. For electric heat applications, minimum airflow is set to 320 cfm/ton, unless specified otherwise, values found in electric heat temperature rise table.

(a) BAYLSDR009A
(b) BAYHSMT097A

Evaporator Fan Performance

Table 42. Direct drive evaporator fan performance - 8.5 tons standard efficiency Title 24 single zone VAV - WSC102H3,H4,HW downflow airflow

External Static Pressure (Inches of Water)																				
	.10”		.20”		.30”		.40”		.50”		.60”		.70”		.80”		.90”		1.00”	
cfm	rpm	bhp	rpm	bhp	rpm	bhp	rpm	bhp	rpm	bhp	rpm	bhp	rpm	bhp	rpm	bhp	rpm	bhp	rpm	bhp
2720	812	0.31	857	0.37	899	0.44	935	0.50	976	0.58	1011	0.65	1040	0.72	1068	0.78	1099	0.85	1129	0.92
3060	904	0.42	942	0.49	983	0.57	1017	0.64	1049	0.71	1086	0.80	1119	0.89	1149	0.96	1174	1.03	1197	1.10
3400	997	0.55	1030	0.63	1066	0.71	1103	0.81	1132	0.89	1160	0.96	1193	1.06	1225	1.16	1254	1.25	1279	1.33
3740	1090	0.72	1120	0.80	1152	0.89	1185	0.99	1218	1.09	1244	1.17	1269	1.25	1298	1.36	1329	1.47	1356	1.57
4080	1183	0.92	1211	1.01	1240	1.10	1270	1.20	1301	1.31	1330	1.42	1354	1.51	1377	1.60	1402	1.70	1430	1.82
External Static Pressure (Inches of Water)																				
	1.10”		1.20”		1.30”		1.40”		1.50”		1.60”		1.70”		1.80”		1.90”		2.00”	
cfm	rpm	bhp	rpm	bhp	rpm	bhp	rpm	bhp	rpm	bhp	rpm	bhp	rpm	bhp	rpm	bhp	rpm	bhp	rpm	bhp
2720	1158	0.99	1186	1.05	1213	1.11	1238	1.18	1264	1.24	1289	1.30	1313	1.36	1336	1.42	1359	1.47	1382	1.53
3060	1226	1.18	1253	1.26	1279	1.33	1305	1.41	1329	1.48	1353	1.55	1377	1.63	1400	1.70	1422	1.76	1444	1.83
3400	1301	1.40	1323	1.48	1347	1.56	1372	1.65	1396	1.74	1421	1.83	1444	1.91	1465	1.99	1487	2.07	1509	2.15
3740	1382	1.67	1406	1.76	1426	1.84	1445	1.92	1465	2.01	1489	2.11	1510	2.20	1533	2.30	1554	2.39	1576	2.49
4080	1457	1.94	1482	2.05	1506	2.16	1527	2.26	1546	2.35	1565	2.44	1583	2.53	1602	2.63	1623	2.73	1643	2.84

Notes:

1. For direct drive evaporator fan speed (rpm), refer to the applicable table in the fan performance section.
2. Data includes pressure drop due to standard filters and wet coils.
3. To determine static pressure drop due to other options/accessories, refer to the applicable table in the fan performance section.
4. Direct drive fan motor heat (MBh) = 2.7912 x fan bhp + 0.1388
5. Factory supplied motors, in commercial equipment, are definite purpose motors, specifically designed and tested to operate reliably and continuously at all cataloged conditions. Using the full horsepower range of our fan motors as shown in our tabular data will not result in nuisance tripping or premature motor failure. Our product's warranty will not be affected.

Table 43. Direct drive evaporator fan performance - 8.5 tons standard efficiency Title 24 single zone VAV - WSC102H3,H4,HW horizontal airflow

External Static Pressure (Inches of Water)																				
	.10”		.20”		.30”		.40”		.50”		.60”		.70”		.80”		.90”		1.00”	
cfm	rpm	bhp	rpm	bhp	rpm	bhp	rpm	bhp	rpm	bhp	rpm	bhp	rpm	bhp	rpm	bhp	rpm	bhp	rpm	bhp
2720	821	0.31	864	0.38	911	0.45	947	0.52	982	0.58	1015	0.65	1046	0.71	1077	0.78	1107	0.85	1137	0.93
3060	914	0.43	951	0.50	993	0.58	1032	0.66	1063	0.73	1095	0.81	1125	0.88	1153	0.95	1181	1.03	1208	1.10
3400	1008	0.57	1041	0.64	1076	0.73	1115	0.82	1148	0.91	1177	0.99	1204	1.07	1232	1.15	1259	1.24	1284	1.32
3740	1103	0.75	1132	0.82	1163	0.91	1197	1.01	1232	1.11	1262	1.21	1288	1.30	1313	1.38	1339	1.47	1364	1.57
4080	1198	0.95	1225	1.04	1253	1.13	1281	1.22	1314	1.33	1345	1.45	1372	1.55	1397	1.65	1420	1.75	1444	1.84
External Static Pressure (Inches of Water)																				
	1.10”		1.20”		1.30”		1.40”		1.50”		1.60”		1.70”		1.80”		1.90”		2.00”	
cfm	rpm	bhp	rpm	bhp	rpm	bhp	rpm	bhp	rpm	bhp	rpm	bhp	rpm	bhp	rpm	bhp	rpm	bhp	rpm	bhp
2720	1165	1.00	1193	1.07	1220	1.15	1245	1.22	1271	1.30	1296	1.38	1322	1.47	1344	1.55	1368	1.63	1391	1.72
3060	1235	1.18	1261	1.26	1288	1.34	1313	1.43	1337	1.51	1361	1.59	1385	1.68	1408	1.77	1431	1.86	1453	1.95
3400	1310	1.40	1334	1.48	1359	1.57	1382	1.66	1406	1.75	1430	1.84	1453	1.93	1474	2.02	1496	2.12	1518	2.21
3740	1388	1.66	1411	1.75	1433	1.83	1456	1.93	1477	2.02	1500	2.11	1522	2.21	1544	2.31	1565	2.41	1586	2.51
4080	1467	1.95	1489	2.04	1512	2.14	1533	2.24	1554	2.34	1575	2.43	1594	2.53	1616	2.64	1636	2.74	-	-

Notes:

1. For direct drive evaporator fan speed (rpm), refer to the applicable table in the fan performance section.
2. Data includes pressure drop due to standard filters and wet coils.
3. To determine static pressure drop due to other options/accessories, refer to the applicable table in the fan performance section.
4. Direct drive fan motor heat (MBh) = 2.7912 x fan bhp + 0.1388
5. Factory supplied motors, in commercial equipment, are definite purpose motors, specifically designed and tested to operate reliably and continuously at all cataloged conditions. Using the full horsepower range of our fan motors as shown in our tabular data will not result in nuisance tripping or premature motor failure. Our product's warranty will not be affected.

Evaporator Fan Performance

Table 44. Direct drive evaporator fan performance - 10 tons standard efficiency - WSC120H3,H4,HW downflow airflow

External Static Pressure (Inches of Water)																				
	.10”		.20”		.30”		.40”		.50”		.60”		.70”		.80”		.90”		1.00”	
cfm	rpm	bhp	rpm	bhp	rpm	bhp	rpm	bhp	rpm	bhp	rpm	bhp	rpm	bhp	rpm	bhp	rpm	bhp	rpm	bhp
3200	942	0.47	978	0.54	1017	0.63	1053	0.71	1082	0.78	1116	0.87	1150	0.96	1181	1.04	1207	1.12	1231	1.19
3600	1051	0.65	1083	0.73	1116	0.81	1152	0.91	1183	1.00	1209	1.08	1237	1.17	1268	1.27	1298	1.38	1325	1.47
4000	1161	0.87	1190	0.96	1219	1.05	1249	1.15	1282	1.26	1310	1.36	1334	1.45	1357	1.54	1385	1.65	1412	1.76
4400	1272	1.13	1298	1.23	1324	1.33	1351	1.44	1379	1.54	1409	1.67	1435	1.79	1457	1.88	1478	1.98	1501	2.08
4800	1383	1.45	1407	1.56	1431	1.66	1455	1.78	1480	1.89	1506	2.01	1532	2.14	1558	2.28	1579	2.39	1599	2.49
External Static Pressure (Inches of Water)																				
	1.10”		1.20”		1.30”		1.40”		1.50”		1.60”		1.70”		1.80”		1.90”		2.00”	
cfm	rpm	bhp	rpm	bhp	rpm	bhp	rpm	bhp	rpm	bhp	rpm	bhp	rpm	bhp	rpm	bhp	rpm	bhp	rpm	bhp
3200	1254	1.26	1282	1.35	1307	1.43	1332	1.51	1357	1.59	1381	1.66	1404	1.74	1427	1.82	1449	1.89	1471	1.96
3600	1350	1.56	1372	1.64	1392	1.72	1412	1.80	1437	1.90	1460	1.99	1483	2.08	1504	2.17	1526	2.26	1548	2.35
4000	1440	1.88	1464	1.98	1488	2.08	1508	2.18	1527	2.26	1545	2.35	1564	2.44	1586	2.55	1606	2.65	1627	2.75
4400	1526	2.20	1552	2.33	1576	2.46	1600	2.58	1621	2.69	1642	2.80	1660	2.90	-	-	-	-	-	-
4800	1618	2.60	1639	2.71	1663	2.85	-	-	-	-	-	-	-	-	-	-	-	-	-	-

Notes:

1. For direct drive evaporator fan speed (rpm), refer to the applicable table in the fan performance section.
2. Data includes pressure drop due to standard filters and wet coils.
3. To determine static pressure drop due to other options/accessories, refer to the applicable table in the fan performance section.
4. Direct drive fan motor heat (MBh) = 2.8623 x fan bhp + 0.1504
5. Factory supplied motors, in commercial equipment, are definite purpose motors, specifically designed and tested to operate reliably and continuously at all cataloged conditions. Using the full horsepower range of our fan motors as shown in our tabular data will not result in nuisance tripping or premature motor failure. Our product's warranty will not be affected.

Table 45. Direct drive evaporator fan performance - 10 tons standard efficiency - WSC120H3,H4,HW horizontal airflow

External Static Pressure (Inches of Water)																				
	.10”		.20”		.30”		.40”		.50”		.60”		.70”		.80”		.90”		1.00”	
cfm	rpm	bhp	rpm	bhp	rpm	bhp	rpm	bhp	rpm	bhp	rpm	bhp	rpm	bhp	rpm	bhp	rpm	bhp	rpm	bhp
3200	953	0.48	988	0.55	1027	0.64	1067	0.73	1098	0.80	1128	0.88	1157	0.96	1186	1.03	1213	1.11	1239	1.19
3600	1064	0.67	1095	0.75	1126	0.83	1163	0.93	1198	1.03	1226	1.11	1253	1.20	1280	1.29	1306	1.37	1331	1.46
4000	1175	0.90	1203	0.98	1231	1.07	1260	1.17	1294	1.28	1327	1.39	1353	1.49	1377	1.58	1401	1.68	1425	1.78
4400	1288	1.18	1313	1.27	1338	1.36	1364	1.46	1392	1.57	1422	1.70	1452	1.82	1477	1.93	1500	2.04	1522	2.14
4800	1400	1.51	1423	1.61	1446	1.71	1470	1.82	1494	1.93	1519	2.05	1547	2.18	1575	2.32	1600	2.45	1622	2.56
External Static Pressure (Inches of Water)																				
	1.10”		1.20”		1.30”		1.40”		1.50”		1.60”		1.70”		1.80”		1.90”		2.00”	
cfm	rpm	bhp	rpm	bhp	rpm	bhp	rpm	bhp	rpm	bhp	rpm	bhp	rpm	bhp	rpm	bhp	rpm	bhp	rpm	bhp
3200	1265	1.27	1291	1.35	1316	1.43	1342	1.52	1365	1.60	1389	1.69	1412	1.78	1435	1.87	1458	1.96	1479	2.05
3600	1355	1.54	1378	1.63	1401	1.72	1425	1.81	1447	1.90	1471	2.00	1492	2.09	1515	2.19	1536	2.28	1557	2.38
4000	1448	1.87	1471	1.97	1494	2.07	1515	2.16	1536	2.26	1557	2.36	1578	2.46	1598	2.56	1619	2.66	1640	2.77
4400	1543	2.24	1565	2.35	1586	2.46	1607	2.56	1628	2.67	1647	2.77	1667	2.88	1686	2.98	-	-	-	-
4800	1642	2.68	1662	2.79	1682	2.91	1701	3.02	-	-	-	-	-	-	-	-	-	-	-	-

Notes:

1. For direct drive evaporator fan speed (rpm), refer to the applicable table in the fan performance section.
2. Data includes pressure drop due to standard filters and wet coils.
3. To determine static pressure drop due to other options/accessories, refer to the applicable table in the fan performance section.
4. Direct drive fan motor heat (MBh) = 2.8623 x fan bhp + 0.1504
5. Factory supplied motors, in commercial equipment, are definite purpose motors, specifically designed and tested to operate reliably and continuously at all cataloged conditions. Using the full horsepower range of our fan motors as shown in our tabular data will not result in nuisance tripping or premature motor failure. Our product's warranty will not be affected.

Evaporator Fan Performance

Table 46. Direct drive evaporator fan performance - 3 tons high efficiency - W/DHC036H3,H4,HW downflow airflow

External Static Pressure (Inches of Water)																				
	.10”		.20”		.30”		.40”		.50”		.60”		.70”		.80”		.90”		1.00”	
cfm	rpm	bhp	rpm	bhp	rpm	bhp	rpm	bhp	rpm	bhp	rpm	bhp	rpm	bhp	rpm	bhp	rpm	bhp	rpm	bhp
	Standard Static Motor																			
960	539	0.11	585	0.15	632	0.18	679	0.22	725	0.26	772	0.29	819	0.33	865	0.37	912	0.41	927	0.44
1080	566	0.16	613	0.20	659	0.24	706	0.27	753	0.31	800	0.35	846	0.38	893	0.42	940	0.46	948	0.49
1200	594	0.21	640	0.25	687	0.29	734	0.32	780	0.36	827	0.40	874	0.43	920	0.47	930	0.51	968	0.54
1320	621	0.26	668	0.30	714	0.34	761	0.37	808	0.41	854	0.45	901	0.49	948	0.52	950	0.56	988	0.60
1440	648	0.31	695	0.35	742	0.39	789	0.43	835	0.46	882	0.50	929	0.54	932	0.57	971	0.61	1009	0.65
															High Static Motor Option[a]					

External Static Pressure (Inches of Water)										
	1.10”		1.20”		1.30”		1.40”		1.50”	
cfm	rpm	bhp	rpm	bhp	rpm	bhp	rpm	bhp	rpm	bhp
	High Static Motor Option[a]									
960	965	0.48	1004	0.52	1042	0.55	1080	0.59	1118	0.63
1080	986	0.53	1024	0.57	1062	0.60	1100	0.64	1139	0.67
1200	1006	0.58	1044	0.62	1083	0.66	1121	0.70	1159	0.74
1320	1027	0.63	1065	0.67	1103	0.70	1141	0.73	1179	0.76
1440	1047	0.68	1085	0.70	1123	0.74	1162	0.77	1200	0.80

Notes:

1. For constant cfm direct drive fan, refer to the voltage vs. cfm table in the fan performance section.
2. Data includes pressure drop due to standard filters and wet coils.
3. To determine static pressure drop due to other options/accessories, refer to the applicable table in the fan performance section.
4. Direct drive fan motor heat (MBh) = 2.9245 x fan bhp + 0.055
5. Factory supplied motors, in commercial equipment, are definite purpose motors, specifically designed and tested to operate reliably and continuously at all cataloged conditions. Using the full horsepower range of our fan motors as shown in our tabular data will not result in nuisance tripping or premature motor failure. Our product's warranty will not be affected.

(a) High Static Motor Option not available on DHC models.

Table 47. Direct drive evaporator fan performance - 3 tons high efficiency - W/DHC036H3,H4,HW horizontal airflow

External Static Pressure (Inches of Water)																				
	.10”		.20”		.30”		.40”		.50”		.60”		.70”		.80”		.90”		1.00”	
cfm	rpm	bhp	rpm	bhp	rpm	bhp	rpm	bhp	rpm	bhp	rpm	bhp	rpm	bhp	rpm	bhp	rpm	bhp	rpm	bhp
	Standard Static Motor																			
960	-	-	515	0.15	565	0.18	614	0.22	663	0.26	713	0.29	762	0.33	812	0.37	861	0.41	921	0.44
1080	-	-	541	0.20	590	0.24	640	0.27	689	0.31	738	0.35	788	0.38	837	0.42	887	0.46	940	0.49
1200	517	0.21	566	0.25	616	0.29	665	0.32	715	0.36	764	0.40	813	0.43	863	0.47	921	0.51	959	0.54
1320	543	0.26	592	0.30	641	0.34	691	0.37	740	0.41	790	0.45	839	0.49	888	0.52	940	0.56	978	0.60
1440	568	0.31	618	0.35	667	0.39	716	0.43	766	0.46	815	0.50	865	0.54	922	0.57	960	0.61	997	0.65
															High Static Motor Option[a]					

External Static Pressure (Inches of Water)										
	1.10”		1.20”		1.30”		1.40”		1.50”	
cfm	rpm	bhp	rpm	bhp	rpm	bhp	rpm	bhp	rpm	bhp
	High Static Motor Option[a]									
960	958	0.48	995	0.52	1033	0.55	1070	0.59	1108	0.63
1080	977	0.53	1015	0.57	1052	0.60	1089	0.64	1127	0.67
1200	996	0.58	1034	0.62	1071	0.66	1108	0.70	1146	0.74
1320	1015	0.63	1053	0.67	1090	0.70	1127	0.73	1165	0.76
1440	1034	0.68	1072	0.70	1109	0.74	1147	0.77	1184	0.80

Notes:

1. For constant cfm direct drive fan, refer to the voltage vs. cfm table in the fan performance section.
2. Data includes pressure drop due to standard filters and wet coils.
3. To determine static pressure drop due to other options/accessories, refer to the applicable table in the fan performance section.
4. Direct drive fan motor heat (MBh) = 2.9245 x fan bhp + 0.055
5. Factory supplied motors, in commercial equipment, are definite purpose motors, specifically designed and tested to operate reliably and continuously at all cataloged conditions. Using the full horsepower range of our fan motors as shown in our tabular data will not result in nuisance tripping or premature motor failure. Our product's warranty will not be affected.

(a) High Static Motor Option not available on DHC models.

Evaporator Fan Performance

Table 48. Direct drive evaporator fan performance - 4 tons high efficiency - W/DHC048H3,H4,HW downflow airflow

External Static Pressure (Inches of Water)																				
	.10”		.20”		.30”		.40”		.50”		.60”		.70”		.80”		.90”		1.00”	
cfm	rpm	bhp	rpm	bhp	rpm	bhp	rpm	bhp	rpm	bhp	rpm	bhp	rpm	bhp	rpm	bhp	rpm	bhp	rpm	bhp
	Standard Static Motor																			
1280	541	0.07	585	0.12	628	0.18	672	0.23	715	0.28	759	0.33	802	0.39	846	0.44	889	0.49	905	0.55
1440	564	0.15	608	0.2	651	0.25	695	0.3	738	0.36	782	0.41	825	0.46	869	0.51	912	0.57	925	0.62
1600	587	0.22	631	0.27	674	0.33	718	0.38	761	0.43	805	0.48	848	0.54	892	0.59	901	0.64	945	0.70
1760	610	0.3	654	0.35	697	0.4	741	0.45	784	0.51	828	0.56	871	0.61	915	0.66	921	0.72	965	0.77
1920	634	0.37	677	0.42	721	0.48	764	0.53	808	0.58	851	0.63	895	0.69	898	0.74	941	0.79	985	0.85
															High Static Motor Option[a]					

External Static Pressure (Inches of Water)										
	1.10”		1.20”		1.30”		1.40”		1.50”	
cfm	rpm	bhp	rpm	bhp	rpm	bhp	rpm	bhp	rpm	bhp
	High Static Motor Option[a]									
1280	949	0.60	992	0.65	1036	0.70	1079	0.76	1123	0.81
1440	969	0.67	1012	0.73	1056	0.78	1099	0.83	1143	0.88
1600	989	0.75	1032	0.80	1076	0.85	1119	0.91	1163	0.96
1760	1009	0.82	1052	0.88	1096	0.93	1139	0.98	1183	1.03
1920	1029	0.90	1072	0.95	1116	1.00	1159	1.06	1203	1.11

Notes:

1. For constant cfm direct drive fan, refer to the voltage vs. cfm table in the fan performance section.
2. Data includes pressure drop due to standard filters and wet coils.
3. To determine static pressure drop due to other options/accessories, refer to the applicable table in the fan performance section.
4. Direct drive fan motor heat (MBh) = 2.9245 x fan bhp + 0.055
5. Factory supplied motors, in commercial equipment, are definite purpose motors, specifically designed and tested to operate reliably and continuously at all cataloged conditions. Using the full horsepower range of our fan motors as shown in our tabular data will not result in nuisance tripping or premature motor failure. Our product's warranty will not be affected.

(a) High Static Motor Option not available on DHC models.

Table 49. Direct drive evaporator fan performance - 4 tons high efficiency - W/DHC048H3,H4,HW horizontal airflow

External Static Pressure (Inches of Water)																				
	.10”		.20”		.30”		.40”		.50”		.60”		.70”		.80”		.90”		1.00”	
cfm	rpm	bhp	rpm	bhp	rpm	bhp	rpm	bhp	rpm	bhp	rpm	bhp	rpm	bhp	rpm	bhp	rpm	bhp	rpm	bhp
	Standard Static Motor																			
1280	591	0.07	632	0.12	674	0.18	715	0.23	756	0.28	798	0.33	839	0.39	880	0.44	922	0.49	968	0.55
1440	621	0.15	663	0.2	704	0.25	745	0.3	787	0.36	828	0.41	869	0.46	911	0.51	952	0.57	1005	0.62
1600	652	0.22	693	0.27	734	0.33	776	0.38	817	0.43	858	0.48	900	0.54	941	0.59	1008	0.64	1041	0.70
1760	682	0.3	723	0.35	765	0.4	806	0.45	847	0.51	889	0.56	930	0.61	971	0.66	1045	0.72	1078	0.77
1920	712	0.37	754	0.42	795	0.48	836	0.53	878	0.58	919	0.63	960	0.69	1048	0.74	1082	0.79	1115	0.85
															High Static Motor Option[a]					
External Static Pressure (Inches of Water)																				
	1.10”		1.20”		1.30”		1.40”		1.50”											
cfm	rpm	bhp	rpm	bhp	rpm	bhp	rpm	bhp	rpm	bhp										
	High Static Motor Option[a]																			
1280	1001	0.60	1034	0.65	1067	0.70	1101	0.76	1134	0.81										
1440	1038	0.67	1071	0.73	1104	0.78	1137	0.83	1170	0.88										
1600	1075	0.75	1108	0.80	1141	0.85	1174	0.91	1207	0.96										
1760	1111	0.82	1144	0.88	1177	0.93	1210	0.98	1244	1.03										
1920	1148	0.90	1181	0.95	1214	1.00	1247	1.06	1280	1.11										

Notes:
1. For constant cfm direct drive fan, refer to the voltage vs. cfm table in the fan performance section.
2. Data includes pressure drop due to standard filters and wet coils.
3. To determine static pressure drop due to other options/accessories, refer to the applicable table in the fan performance section.
4. Direct drive fan motor heat (MBh) = 2.9245 x fan bhp +0.055
5. Factory supplied motors, in commercial equipment, are definite purpose motors, specifically designed and tested to operate reliably and continuously at all cataloged conditions. Using the full horsepower range of our fan motors as shown in our tabular data will not result in nuisance tripping or premature motor failure. Our product's warranty will not be affected.

(a) High Static Motor Option not available on DHC models.

Evaporator Fan Performance

Table 50. Direct drive evaporator fan performance - 5 tons high efficiency - W/DHC060H3,H4,HW downflow airflow

External Static Pressure (Inches of Water)																				
	.10”		.20”		.30”		.40”		.50”		.60”		.70”		.80”		.90”		1.00”	
cfm	rpm	bhp	rpm	bhp	rpm	bhp	rpm	bhp	rpm	bhp	rpm	bhp	rpm	bhp	rpm	bhp	rpm	bhp	rpm	bhp
	Standard Static Motor																			
1600	618	0.13	656	0.18	693	0.23	731	0.28	769	0.33	806	0.38	844	0.43	881	0.48	919	0.53	932	0.58
1800	651	0.24	689	0.29	727	0.34	764	0.39	802	0.44	839	0.49	877	0.54	915	0.59	957	0.64	961	0.69
2000	685	0.35	722	0.4	760	0.45	798	0.5	835	0.55	873	0.6	910	0.65	948	0.7	952	0.75	991	0.80
2200	718	0.46	756	0.51	793	0.56	831	0.61	869	0.66	906	0.71	944	0.76	981	0.81	981	0.86	1021	0.91
2400	752	0.57	789	0.62	827	0.67	864	0.72	902	0.77	940	0.82	977	0.87	971	0.92	1011	0.97	1050	1.02
															High Static Motor Option[a]					

External Static Pressure (Inches of Water)										
	1.10”		1.20”		1.30”		1.40”		1.50”	
cfm	rpm	bhp	rpm	bhp	rpm	bhp	rpm	bhp	rpm	bhp
	High Static Motor Option[a]									
1600	971	0.63	1011	0.68	1050	0.73	1089	0.79	1129	0.84
1800	1001	0.74	1040	0.79	1080	0.84	1119	0.89	1158	0.92
2000	1030	0.85	1070	0.90	1109	0.95	1149	0.99	1188	1.02
2200	1060	0.96	1099	1.01	1139	1.04	1178	1.06	1218	1.09
2400	1090	1.05	1129	1.07	1168	1.10	1208	1.13	1247	1.16

Notes:

1. For constant cfm direct drive fan, refer to the voltage vs. cfm table in the fan performance section.
2. Data includes pressure drop due to standard filters and wet coils.
3. To determine static pressure drop due to other options/accessories, refer to the applicable table in the fan performance section.
4. Direct drive fan motor heat (MBh) = 2.9245 x fan bhp +0.055
5. Factory supplied motors, in commercial equipment, are definite purpose motors, specifically designed and tested to operate reliably and continuously at all cataloged conditions. Using the full horsepower range of our fan motors as shown in our tabular data will not result in nuisance tripping or premature motor failure. Our product's warranty will not be affected.

(a) High Static Motor Option not available on DHC models.

Table 51. Direct drive evaporator fan performance - 5 tons high efficiency - W/DHC060H3,H4,HW horizontal airflow

External Static Pressure (Inches of Water)																				
	.10”		.20”		.30”		.40”		.50”		.60”		.70”		.80”		.90”		1.00”	
cfm	rpm	bhp	rpm	bhp	rpm	bhp	rpm	bhp	rpm	bhp	rpm	bhp	rpm	bhp	rpm	bhp	rpm	bhp	rpm	bhp
	Standard Static Motor																			
1600	680	0.14	717	0.19	753	0.25	790	0.31	827	0.36	864	0.42	901	0.47	937	0.48	974	0.53	1047	0.58
1800	716	0.27	753	0.32	789	0.38	826	0.44	863	0.49	900	0.55	937	0.61	973	0.59	1010	0.64	1084	0.69
2000	752	0.4	789	0.46	825	0.51	862	0.57	899	0.63	936	0.68	973	0.74	1009	0.7	1084	0.75	1120	0.80
2200	788	0.53	825	0.59	861	0.65	898	0.7	935	0.76	972	0.82	1009	0.87	1045	0.81	1121	0.86	1156	0.91
2400	824	0.67	861	0.72	897	0.78	934	0.84	971	0.89	1008	0.95	1045	1.01	1121	0.92	1157	0.97	1193	1.02
															High Static Motor Option[a]					
External Static Pressure (Inches of Water)																				
	1.10”		1.20”		1.30”		1.40”		1.50”											
cfm	rpm	bhp	rpm	bhp	rpm	bhp	rpm	bhp	rpm	bhp										
	High Static Motor Option[a]																			
1600	1083	0.63	1119	0.68	1155	0.73	1191	0.79	1227	0.84										
1800	1120	0.74	1155	0.79	1191	0.84	1227	0.89	1263	0.92										
2000	1156	0.85	1192	0.90	1228	0.95	1264	0.99	1300	1.02										
2200	1192	0.96	1228	1.01	1264	1.04	1300	1.06	1336	1.09										
2400	1229	1.05	1265	1.07	1301	1.10	1336	1.13	1372	1.16										

Notes:

1. For constant cfm direct drive fan, refer to the voltage vs. cfm table in the fan performance section.
2. Data includes pressure drop due to standard filters and wet coils.
3. To determine static pressure drop due to other options/accessories, refer to the applicable table in the fan performance section.
4. Direct drive fan motor heat (MBh) = 2.9245 x fan bhp +0.055
5. Factory supplied motors, in commercial equipment, are definite purpose motors, specifically designed and tested to operate reliably and continuously at all cataloged conditions. Using the full horsepower range of our fan motors as shown in our tabular data will not result in nuisance tripping or premature motor failure. Our product's warranty will not be affected.

(a) High Static Motor Option not available on DHC models.

Evaporator Fan Performance

Table 52. Direct drive evaporator fan performance - 6 tons high efficiency - WHC074H3,4,W downflow airflow

	External Static Pressure (Inches of Water)																			
	.10”		.20”		.30”		.40”		.50”		.60”		.70”		.80”		.90”		1.00”	
cfm	rpm	bhp	rpm	bhp	rpm	bhp	rpm	bhp	rpm	bhp	rpm	bhp	rpm	bhp	rpm	bhp	rpm	bhp	rpm	bhp
1920	598	0.10	649	0.14	695	0.18	736	0.23	773	0.27	808	0.32	841	0.37	872	0.41	901	0.46	930	0.52
2160	660	0.14	707	0.18	750	0.23	789	0.27	825	0.32	859	0.37	891	0.42	921	0.47	950	0.53	977	0.58
2400	722	0.18	767	0.23	807	0.27	844	0.32	879	0.38	912	0.43	943	0.48	972	0.54	1000	0.60	1027	0.66
2640	785	0.23	827	0.28	865	0.33	900	0.38	934	0.44	965	0.50	995	0.56	1024	0.62	1051	0.68	1077	0.74
2880	848	0.28	888	0.34	924	0.40	958	0.45	990	0.51	1020	0.58	1049	0.64	1077	0.70	1103	0.77	1129	0.83
	External Static Pressure (Inches of Water)																			
	1.10”		1.20”		1.30”		1.40”		1.50”		1.60”		1.70”		1.80”		1.90”		2.00”	
cfm	rpm	bhp	rpm	bhp	rpm	bhp	rpm	bhp	rpm	bhp	rpm	bhp	rpm	bhp	rpm	bhp	rpm	bhp	rpm	bhp
1920	957	0.57	983	0.63	1009	0.68	1032	0.74	1056	0.8	1079	0.85	1101	0.92	1122	0.98	1143	1.04	1164	1.1
2160	1004	0.64	1029	0.7	1055	0.76	1078	0.82	1101	0.88	1124	0.94	1146	1	1167	1.07	1188	1.13	1209	1.2
2400	1053	0.72	1077	0.78	1102	0.84	1125	0.9	1148	0.97	1171	1.04	1192	1.1	1213	1.17	1234	1.24	1254	1.31
2640	1103	0.8	1127	0.87	1151	0.93	1174	1	1196	1.07	1218	1.14	1239	1.21	1260	1.28	1280	1.35	1300	1.42
2880	1154	0.9	1177	0.97	1201	1.04	1223	1.11	1245	1.18	1267	1.25	1287	1.32	1308	1.4	1328	1.47	1348	1.55

Notes:

1. For direct drive evaporator fan speed (rpm), refer to the applicable table in the fan performance section.
2. Data includes pressure drop due to standard filters and wet coils.
3. To determine static pressure drop due to other options/accessories, refer to the applicable table in the fan performance section.
4. Direct drive fan motor heat (MBh) = 2.7912 x fan bhp + 0.1388
5. Factory supplied motors, in commercial equipment, are definite purpose motors, specifically designed and tested to operate reliably and continuously at all cataloged conditions. Using the full horsepower range of our fan motors as shown in our tabular data will not result in nuisance tripping or premature motor failure. Our product's warranty will not be affected.

Table 53. Direct drive evaporator fan performance - 6 tons high efficiency - WHC074H3,4,W horizontal airflow

External Static Pressure (Inches of Water)																				
	.10”		.20”		.30”		.40”		.50”		.60”		.70”		.80”		.90”		1.00”	
cfm	rpm	bhp	rpm	bhp	rpm	bhp	rpm	bhp	rpm	bhp	rpm	bhp	rpm	bhp	rpm	bhp	rpm	bhp	rpm	bhp
1920	583	0.07	638	0.10	686	0.12	729	0.15	768	0.18	805	0.21	839	0.24	871	0.27	902	0.30	931	0.33
2160	642	0.09	693	0.12	739	0.15	780	0.18	818	0.21	853	0.24	887	0.28	918	0.31	948	0.34	977	0.38
2400	702	0.11	750	0.15	793	0.19	832	0.22	869	0.25	903	0.29	935	0.32	966	0.35	996	0.39	1023	0.43
2640	762	0.14	807	0.19	848	0.23	886	0.26	921	0.30	954	0.33	986	0.37	1015	0.41	1043	0.45	1071	0.48
2880	823	0.17	865	0.22	904	0.27	940	0.31	974	0.35	1006	0.39	1037	0.43	1066	0.47	1094	0.51	1121	0.55
External Static Pressure (Inches of Water)																				
	1.10”		1.20”		1.30”		1.40”		1.50”		1.60”		1.70”		1.80”		1.90”		2.00”	
cfm	rpm	bhp	rpm	bhp	rpm	bhp	rpm	bhp	rpm	bhp	rpm	bhp	rpm	bhp	rpm	bhp	rpm	bhp	rpm	bhp
1920	960	0.36	986	0.40	1013	0.43	1038	0.46	1062	0.50	1085	0.54	1108	0.57	1131	0.61	1153	0.65	1175	0.69
2160	1004	0.41	1031	0.45	1057	0.48	1082	0.52	1106	0.56	1129	0.59	1152	0.63	1173	0.67	1194	0.71	1216	0.75
2400	1051	0.47	1077	0.50	1102	0.54	1126	0.58	1150	0.62	1173	0.66	1195	0.70	1217	0.74	1238	0.78	1259	0.83
2640	1098	0.52	1123	0.56	1148	0.61	1172	0.65	1195	0.69	1218	0.73	1240	0.77	1261	0.82	1282	0.86	1303	0.91
2880	1147	0.59	1171	0.63	1195	0.68	1219	0.72	1242	0.76	1264	0.81	1286	0.85	1307	0.9	1328	0.95	1348	0.99

Notes:

1. For direct drive evaporator fan speed (rpm), refer to the applicable table in the fan performance section.
2. Data includes pressure drop due to standard filters and wet coils.
3. To determine static pressure drop due to other options/accessories, refer to the applicable table in the fan performance section.
4. Direct drive fan motor heat (MBh) = 2.7912 x fan bhp + 0.1388
5. Factory supplied motors, in commercial equipment, are definite purpose motors, specifically designed and tested to operate reliably and continuously at all cataloged conditions. Using the full horsepower range of our fan motors as shown in our tabular data will not result in nuisance tripping or premature motor failure. Our product's warranty will not be affected.

Evaporator Fan Performance

Table 54. Direct drive evaporator fan performance - 6 tons high efficiency dual fuel low/medium heat - DHC074H3,4,W downflow airflow

	External Static Pressure (Inches of Water)																			
	.10”		.20”		.30”		.40”		.50”		.60”		.70”		.80”		.90”		1.00”	
cfm	rpm	bhp	rpm	bhp	rpm	bhp	rpm	bhp	rpm	bhp	rpm	bhp	rpm	bhp	rpm	bhp	rpm	bhp	rpm	bhp
1920	625	0.15	678	0.20	727	0.25	770	0.30	810	0.35	847	0.41	882	0.46	915	0.52	947	0.58	976	0.64
2160	691	0.20	737	0.25	784	0.31	826	0.37	864	0.42	900	0.48	934	0.54	966	0.61	997	0.67	1026	0.73
2400	757	0.26	799	0.32	842	0.38	882	0.44	919	0.51	955	0.57	987	0.64	1018	0.70	1049	0.77	1077	0.84
2640	824	0.34	864	0.40	901	0.46	941	0.53	977	0.60	1010	0.67	1042	0.74	1073	0.81	1101	0.88	1129	0.96
2880	892	0.42	929	0.49	963	0.55	999	0.63	1034	0.71	1067	0.78	1098	0.86	1127	0.94	1155	1.01	1183	1.09
	External Static Pressure (Inches of Water)																			
	1.10”		1.20”		1.30”		1.40”		1.50”		1.60”		1.70”		1.80”		1.90”		2.00”	
cfm	rpm	bhp	rpm	bhp	rpm	bhp	rpm	bhp	rpm	bhp	rpm	bhp	rpm	bhp	rpm	bhp	rpm	bhp	rpm	bhp
1920	1005	0.70	1033	0.76	1060	0.83	1086	0.89	1111	0.96	1135	1.03	1158	1.09	1181	1.17	1203	1.23	1225	1.31
2160	1054	0.80	1082	0.87	1107	0.93	1133	1.00	1158	1.08	1182	1.15	1205	1.22	1228	1.29	1250	1.37	1272	1.45
2400	1105	0.91	1131	0.98	1157	1.05	1182	1.13	1206	1.20	1229	1.28	1252	1.35	1275	1.43	1297	1.51	1318	1.59
2640	1156	1.03	1183	1.11	1208	1.19	1232	1.27	1255	1.34	1279	1.42	1302	1.51	1323	1.59	1344	1.67	1365	1.75
2880	1209	1.17	1234	1.25	1259	1.34	1283	1.42	1306	1.50	1330	1.59	1351	1.67	1373	1.76	1394	1.84	1414	1.93

Notes:
1. For direct drive evaporator fan speed (rpm), refer to the applicable table in the fan performance section.
2. Data includes pressure drop due to standard filters and wet coils.
3. To determine static pressure drop due to other options/accessories, refer to the applicable table in the fan performance section.
4. Direct drive fan motor heat (MBh) = 2.7912 x fan bhp + 0.1388
5. Factory supplied motors, in commercial equipment, are definite purpose motors, specifically designed and tested to operate reliably and continuously at all cataloged conditions. Using the full horsepower range of our fan motors as shown in our tabular data will not result in nuisance tripping or premature motor failure. Our product's warranty will not be affected.

Table 55. Direct drive evaporator fan performance - 6 tons high efficiency dual fuel low/medium heat - DHC074H3,4,W horizontal airflow

External Static Pressure (Inches of Water)																				
	.10”		.20”		.30”		.40”		.50”		.60”		.70”		.80”		.90”		1.00”	
cfm	rpm	bhp	rpm	bhp	rpm	bhp	rpm	bhp	rpm	bhp	rpm	bhp	rpm	bhp	rpm	bhp	rpm	bhp	rpm	bhp
1920	583	0.07	638	0.10	686	0.12	729	0.15	768	0.18	805	0.21	839	0.24	871	0.27	902	0.30	931	0.33
2160	642	0.09	693	0.12	739	0.15	780	0.18	818	0.21	853	0.24	887	0.28	918	0.31	948	0.34	977	0.38
2400	702	0.11	750	0.15	793	0.19	832	0.22	869	0.25	903	0.29	935	0.32	966	0.35	996	0.39	1023	0.43
2640	762	0.14	807	0.19	848	0.23	886	0.26	921	0.30	954	0.33	986	0.37	1015	0.41	1043	0.45	1071	0.48
2880	823	0.17	865	0.22	904	0.27	940	0.31	974	0.35	1006	0.39	1037	0.43	1066	0.47	1094	0.51	1121	0.55
External Static Pressure (Inches of Water)																				
	1.10”		1.20”		1.30”		1.40”		1.50”		1.60”		1.70”		1.80”		1.90”		2.00”	
cfm	rpm	bhp	rpm	bhp	rpm	bhp	rpm	bhp	rpm	bhp	rpm	bhp	rpm	bhp	rpm	bhp	rpm	bhp	rpm	bhp
1920	960	0.36	986	0.40	1013	0.43	1038	0.46	1062	0.50	1085	0.54	1108	0.57	1131	0.61	1153	0.65	1175	0.69
2160	1004	0.41	1031	0.45	1057	0.48	1082	0.52	1106	0.56	1129	0.59	1152	0.63	1173	0.67	1194	0.71	1216	0.75
2400	1051	0.47	1077	0.50	1102	0.54	1126	0.58	1150	0.62	1173	0.66	1195	0.70	1217	0.74	1238	0.78	1259	0.83
2640	1098	0.52	1123	0.56	1148	0.61	1172	0.65	1195	0.69	1218	0.73	1240	0.77	1261	0.82	1282	0.86	1303	0.91
2880	1147	0.59	1171	0.63	1195	0.68	1219	0.72	1242	0.76	1264	0.81	1286	0.85	1307	0.90	1328	0.95	1348	0.99

Notes:
1. For direct drive evaporator fan speed (rpm), refer to the applicable table in the fan performance section.
2. Data includes pressure drop due to standard filters and wet coils.
3. To determine static pressure drop due to other options/accessories, refer to the applicable table in the fan performance section.
4. Direct drive fan motor heat (MBh) = 2.7912 x fan bhp + 0.1388
5. Factory supplied motors, in commercial equipment, are definite purpose motors, specifically designed and tested to operate reliably and continuously at all cataloged conditions. Using the full horsepower range of our fan motors as shown in our tabular data will not result in nuisance tripping or premature motor failure. Our product's warranty will not be affected.

Evaporator Fan Performance

Table 56. Direct drive evaporator fan performance - 6 tons high efficiency dual fuel high heat - DHC074H3,4,W downflow airflow

	External Static Pressure (Inches of Water)																			
	.10”		.20”		.30”		.40”		.50”		.60”		.70”		.80”		.90”		1.00”	
cfm	rpm	bhp	rpm	bhp	rpm	bhp	rpm	bhp	rpm	bhp	rpm	bhp	rpm	bhp	rpm	bhp	rpm	bhp	rpm	bhp
1920	611	0.15	665	0.20	709	0.25	759	0.31	800	0.36	839	0.41	877	0.47	915	0.53	949	0.59	982	0.66
2160	674	0.20	724	0.26	765	0.31	807	0.37	851	0.43	888	0.49	922	0.55	959	0.62	992	0.68	1025	0.75
2400	739	0.26	783	0.32	826	0.39	860	0.44	899	0.51	938	0.58	974	0.65	1006	0.71	1037	0.78	1068	0.85
2640	804	0.34	844	0.40	886	0.47	920	0.54	951	0.60	987	0.67	1024	0.75	1058	0.83	1087	0.90	1114	0.97
2880	870	0.42	907	0.49	944	0.57	982	0.64	1011	0.71	1039	0.78	1073	0.86	1106	0.95	1138	1.04	1167	1.12
	External Static Pressure (Inches of Water)																			
	1.10”		1.20”		1.30”		1.40”		1.50”		1.60”		1.70”		1.80”		1.90”		2.00”	
cfm	rpm	bhp	rpm	bhp	rpm	bhp	rpm	bhp	rpm	bhp	rpm	bhp	rpm	bhp	rpm	bhp	rpm	bhp	rpm	bhp
1920	1014	0.72	1044	0.78	1073	0.85	1101	0.91	1128	0.98	1155	1.05	1180	1.11	1205	1.18	1230	1.26	1253	1.33
2160	1056	0.82	1085	0.89	1114	0.96	1142	1.03	1170	1.10	1195	1.17	1221	1.25	1246	1.32	1270	1.40	1293	1.47
2400	1098	0.93	1128	1.00	1156	1.08	1184	1.15	1210	1.23	1237	1.31	1262	1.39	1287	1.47	1310	1.55	1334	1.63
2640	1144	1.05	1173	1.13	1201	1.21	1228	1.29	1253	1.38	1279	1.46	1304	1.54	1329	1.63	1352	1.72	1375	1.80
2880	1193	1.19	1219	1.27	1245	1.35	1272	1.44	1298	1.53	1322	1.62	1348	1.71	1372	1.80	1395	1.89	1418	1.99

Notes:

1. For direct drive evaporator fan speed (rpm), refer to the applicable table in the fan performance section.
2. Data includes pressure drop due to standard filters and wet coils.
3. To determine static pressure drop due to other options/accessories, refer to the applicable table in the fan performance section.
4. Direct drive fan motor heat (MBh) = 2.7912 x fan bhp + 0.1388
5. Factory supplied motors, in commercial equipment, are definite purpose motors, specifically designed and tested to operate reliably and continuously at all cataloged conditions. Using the full horsepower range of our fan motors as shown in our tabular data will not result in nuisance tripping or premature motor failure. Our product's warranty will not be affected.

Table 57. Direct drive evaporator fan performance - 6 tons high efficiency dual fuel high heat - DHC074H3,4,W horizontal airflow

External Static Pressure (Inches of Water)																				
	.10”		.20”		.30”		.40”		.50”		.60”		.70”		.80”		.90”		1.00”	
cfm	rpm	bhp	rpm	bhp	rpm	bhp	rpm	bhp	rpm	bhp	rpm	bhp	rpm	bhp	rpm	bhp	rpm	bhp	rpm	bhp
1920	601	0.14	657	0.19	707	0.24	754	0.29	797	0.35	839	0.41	879	0.47	916	0.53	951	0.59	984	0.66
2160	663	0.18	712	0.24	762	0.30	804	0.35	846	0.41	884	0.47	922	0.54	958	0.61	993	0.68	1026	0.74
2400	725	0.24	770	0.29	816	0.36	858	0.43	896	0.49	933	0.55	969	0.62	1003	0.69	1036	0.76	1069	0.84
2640	789	0.30	831	0.36	871	0.43	913	0.51	950	0.58	983	0.64	1018	0.72	1052	0.80	1082	0.87	1112	0.95
2880	852	0.38	892	0.45	929	0.52	966	0.59	1004	0.68	1038	0.76	1069	0.83	1101	0.91	1131	0.99	1161	1.07
External Static Pressure (Inches of Water)																				
	1.10”		1.20”		1.30”		1.40”		1.50”		1.60”		1.70”		1.80”		1.90”		2.00”	
cfm	rpm	bhp	rpm	bhp	rpm	bhp	rpm	bhp	rpm	bhp	rpm	bhp	rpm	bhp	rpm	bhp	rpm	bhp	rpm	bhp
1920	1016	0.72	1047	0.79	1078	0.87	1106	0.94	1134	1.01	1162	1.09	1187	1.16	1213	1.24	1237	1.31	1261	1.39
2160	1058	0.82	1089	0.89	1117	0.96	1146	1.04	1173	1.12	1201	1.20	1227	1.28	1252	1.36	1276	1.44	1300	1.52
2400	1100	0.92	1130	0.99	1159	1.07	1187	1.15	1214	1.24	1241	1.32	1266	1.40	1292	1.49	1316	1.58	1339	1.66
2640	1143	1.03	1173	1.11	1201	1.19	1230	1.28	1256	1.37	1282	1.45	1308	1.54	1332	1.63	1356	1.72	1379	1.81
2880	1189	1.15	1216	1.24	1245	1.33	1271	1.41	1298	1.51	1324	1.60	1349	1.69	1374	1.79	1398	1.88	1421	1.98

Notes:
1. For direct drive evaporator fan speed (rpm), refer to the applicable table in the fan performance section.
2. Data includes pressure drop due to standard filters and wet coils.
3. To determine static pressure drop due to other options/accessories, refer to the applicable table in the fan performance section.
4. Direct drive fan motor heat (MBh) = 2.7912 x fan bhp + 0.1388
5. Factory supplied motors, in commercial equipment, are definite purpose motors, specifically designed and tested to operate reliably and continuously at all cataloged conditions. Using the full horsepower range of our fan motors as shown in our tabular data will not result in nuisance tripping or premature motor failure. Our product's warranty will not be affected.

Evaporator Fan Performance

Table 58. Direct drive evaporator fan performance - 7.5 tons high efficiency - WHC092H3,4,W downflow airflow

	External Static Pressure (Inches of Water)																			
	.10”		.20”		.30”		.40”		.50”		.60”		.70”		.80”		.90”		1.00”	
cfm	rpm	bhp	rpm	bhp	rpm	bhp	rpm	bhp	rpm	bhp	rpm	bhp	rpm	bhp	rpm	bhp	rpm	bhp	rpm	bhp
2400	706	0.17	752	0.21	792	0.26	830	0.31	865	0.36	897	0.41	928	0.47	958	0.52	987	0.58	1013	0.64
2700	784	0.22	825	0.27	863	0.33	898	0.38	932	0.44	963	0.49	993	0.55	1021	0.61	1049	0.67	1075	0.74
3000	862	0.29	900	0.35	936	0.41	969	0.46	1001	0.53	1031	0.59	1059	0.65	1086	0.72	1113	0.78	1138	0.85
3300	941	0.37	975	0.44	1009	0.50	1040	0.56	1070	0.63	1099	0.70	1127	0.76	1153	0.83	1178	0.90	1203	0.97
3600	1021	0.47	1052	0.54	1083	0.61	1113	0.68	1142	0.75	1169	0.82	1195	0.89	1221	0.97	1245	1.04	1268	1.12
	External Static Pressure (Inches of Water)																			
	1.10”		1.20”		1.30”		1.40”		1.50”		1.60”		1.70”		1.80”		1.90”		2.00”	
cfm	rpm	bhp	rpm	bhp	rpm	bhp	rpm	bhp	rpm	bhp	rpm	bhp	rpm	bhp	rpm	bhp	rpm	bhp	rpm	bhp
2400	1039	0.70	1065	0.76	1089	0.82	1112	0.88	1135	0.95	1157	1.01	1178	1.08	1199	1.15	1221	1.22	1240	1.28
2700	1100	0.80	1125	0.87	1148	0.93	1171	1.00	1193	1.07	1215	1.14	1236	1.21	1257	1.28	1276	1.35	1296	1.42
3000	1162	0.91	1187	0.99	1209	1.05	1232	1.13	1254	1.20	1275	1.27	1295	1.35	1315	1.42	1335	1.50	1354	1.58
3300	1227	1.05	1249	1.12	1272	1.20	1293	1.27	1314	1.35	1335	1.43	1356	1.50	1376	1.59	1396	1.67	1415	1.75
3600	1292	1.20	1315	1.27	1335	1.35	1357	1.43	1377	1.51	1398	1.60	1418	1.68	1437	1.76	1457	1.85	1475	1.93

Notes:

1. For direct drive evaporator fan speed (rpm), refer to the applicable table in the fan performance section.
2. Data includes pressure drop due to standard filters and wet coils.
3. To determine static pressure drop due to other options/accessories, refer to the applicable table in the fan performance section.
4. Direct drive fan motor heat (MBh) = 2.7912 x fan bhp + 0.1388
5. Factory supplied motors, in commercial equipment, are definite purpose motors, specifically designed and tested to operate reliably and continuously at all cataloged conditions. Using the full horsepower range of our fan motors as shown in our tabular data will not result in nuisance tripping or premature motor failure. Our product's warranty will not be affected.

Table 59. Direct drive evaporator fan performance - 7.5 tons high efficiency - WHC092H3,4,W horizontal airflow

External Static Pressure (Inches of Water)																				
	.10”		.20”		.30”		.40”		.50”		.60”		.70”		.80”		.90”		1.00”	
cfm	rpm	bhp	rpm	bhp	rpm	bhp	rpm	bhp	rpm	bhp	rpm	bhp	rpm	bhp	rpm	bhp	rpm	bhp	rpm	bhp
2400	697	0.20	741	0.25	785	0.31	823	0.37	862	0.43	898	0.49	932	0.55	964	0.61	994	0.68	1024	0.74
2700	772	0.27	813	0.33	853	0.39	890	0.45	924	0.52	959	0.59	992	0.66	1023	0.72	1052	0.79	1081	0.86
3000	849	0.35	886	0.42	921	0.49	958	0.55	991	0.63	1022	0.70	1053	0.78	1083	0.85	1112	0.93	1140	1.00
3300	926	0.45	961	0.53	993	0.60	1026	0.67	1060	0.74	1089	0.83	1117	0.91	1145	0.99	1173	1.08	1200	1.16
3600	1004	0.58	1037	0.65	1067	0.73	1096	0.81	1126	0.89	1157	0.97	1184	1.06	1210	1.15	1235	1.24	1262	1.34
External Static Pressure (Inches of Water)																				
	1.10”		1.20”		1.30”		1.40”		1.50”		1.60”		1.70”		1.80”		1.90”		2.00”	
cfm	rpm	bhp	rpm	bhp	rpm	bhp	rpm	bhp	rpm	bhp	rpm	bhp	rpm	bhp	rpm	bhp	rpm	bhp	rpm	bhp
2400	1051	0.81	1079	0.88	1105	0.95	1130	1.02	1154	1.09	1179	1.16	1202	1.24	1225	1.31	1246	1.39	1268	1.46
2700	1109	0.94	1135	1.01	1161	1.08	1185	1.16	1210	1.24	1233	1.31	1256	1.39	1278	1.47	1299	1.55	1321	1.64
3000	1167	1.08	1193	1.16	1217	1.24	1241	1.32	1266	1.40	1287	1.48	1310	1.56	1333	1.65	1354	1.74	1375	1.83
3300	1226	1.24	1251	1.33	1275	1.41	1299	1.49	1322	1.58	1345	1.67	1367	1.76	1388	1.85	1410	1.94	1430	2.03
3600	1286	1.42	1312	1.51	1335	1.60	1359	1.70	1381	1.79	1403	1.88	1425	1.98	1446	2.07	1467	2.17	1487	2.26

Notes:

1. For direct drive evaporator fan speed (rpm), refer to the applicable table in the fan performance section.
2. Data includes pressure drop due to standard filters and wet coils.
3. To determine static pressure drop due to other options/accessories, refer to the applicable table in the fan performance section.
4. Direct drive fan motor heat (MBh) = 2.7912 x fan bhp + 0.1388
5. Factory supplied motors, in commercial equipment, are definite purpose motors, specifically designed and tested to operate reliably and continuously at all cataloged conditions. Using the full horsepower range of our fan motors as shown in our tabular data will not result in nuisance tripping or premature motor failure. Our product's warranty will not be affected.

Table 60. Direct drive evaporator fan performance - 7.5 tons high efficiency dual fuel low/medium heat - DHC092H3,4,W downflow airflow

	External Static Pressure (Inches of Water)																			
	.10”		.20”		.30”		.40”		.50”		.60”		.70”		.80”		.90”		1.00”	
cfm	rpm	bhp	rpm	bhp	rpm	bhp	rpm	bhp	rpm	bhp	rpm	bhp	rpm	bhp	rpm	bhp	rpm	bhp	rpm	bhp
2400	742	0.24	786	0.30	826	0.36	869	0.42	906	0.48	942	0.55	975	0.61	1006	0.68	1036	0.74	1065	0.81
2700	823	0.33	864	0.39	900	0.45	938	0.52	975	0.59	1009	0.66	1041	0.73	1071	0.81	1100	0.88	1129	0.95
3000	905	0.43	944	0.51	978	0.57	1009	0.64	1045	0.72	1078	0.80	1109	0.88	1138	0.96	1166	1.04	1194	1.12
3300	988	0.55	1025	0.64	1057	0.72	1086	0.79	1115	0.87	1147	0.96	1178	1.05	1206	1.13	1234	1.22	1260	1.30
3600	1071	0.70	1105	0.80	1137	0.89	1165	0.97	1192	1.05	1218	1.13	1248	1.23	1276	1.33	1303	1.42	1328	1.51
	External Static Pressure (Inches of Water)																			
	1.10”		1.20”		1.30”		1.40”		1.50”		1.60”		1.70”		1.80”		1.90”		2.00”	
cfm	rpm	bhp	rpm	bhp	rpm	bhp	rpm	bhp	rpm	bhp	rpm	bhp	rpm	bhp	rpm	bhp	rpm	bhp	rpm	bhp
2400	1093	0.88	1119	0.95	1145	1.02	1171	1.10	1195	1.17	1219	1.25	1241	1.32	1264	1.40	1286	1.48	1308	1.56
2700	1156	1.03	1181	1.10	1207	1.18	1232	1.26	1255	1.34	1278	1.42	1301	1.50	1323	1.58	1344	1.67	1365	1.75
3000	1219	1.20	1245	1.28	1270	1.36	1294	1.45	1318	1.53	1340	1.62	1362	1.71	1384	1.79	1406	1.88	1426	1.97
3300	1286	1.39	1310	1.48	1335	1.57	1358	1.66	1381	1.75	1403	1.84	1425	1.93	1446	2.03	1467	2.12	1487	2.21
3600	1353	1.61	1377	1.70	1400	1.79	1424	1.89	1445	1.99	1467	2.08	1488	2.18	1509	2.28	1530	2.38	1550	2.49

Notes:

1. For direct drive evaporator fan speed (rpm), refer to the applicable table in the fan performance section.
2. Data includes pressure drop due to standard filters and wet coils.
3. To determine static pressure drop due to other options/accessories, refer to the applicable table in the fan performance section.
4. Direct drive fan motor heat (MBh) = 2.7912 x fan bhp + 0.1388
5. Factory supplied motors, in commercial equipment, are definite purpose motors, specifically designed and tested to operate reliably and continuously at all cataloged conditions. Using the full horsepower range of our fan motors as shown in our tabular data will not result in nuisance tripping or premature motor failure. Our product's warranty will not be affected.

Table 61. Direct drive evaporator fan performance - 7.5 tons high efficiency dual fuel low/medium heat - DHC092H3,4,W horizontal airflow

External Static Pressure (Inches of Water)																				
	.10”		.20”		.30”		.40”		.50”		.60”		.70”		.80”		.90”		1.00”	
cfm	rpm	bhp	rpm	bhp	rpm	bhp	rpm	bhp	rpm	bhp	rpm	bhp	rpm	bhp	rpm	bhp	rpm	bhp	rpm	bhp
2400	718	0.22	762	0.27	805	0.33	844	0.39	881	0.45	915	0.51	947	0.57	978	0.64	1007	0.70	1035	0.77
2700	796	0.30	836	0.36	875	0.42	913	0.49	947	0.55	980	0.62	1011	0.69	1041	0.76	1069	0.83	1096	0.90
3000	876	0.39	913	0.46	948	0.53	983	0.60	1016	0.67	1047	0.75	1077	0.82	1106	0.90	1133	0.97	1160	1.05
3300	956	0.51	990	0.58	1022	0.65	1055	0.73	1086	0.81	1116	0.89	1145	0.98	1172	1.06	1198	1.14	1224	1.22
3600	1037	0.64	1069	0.73	1099	0.81	1128	0.88	1157	0.96	1186	1.05	1213	1.14	1240	1.23	1266	1.33	1290	1.41
External Static Pressure (Inches of Water)																				
	1.10”		1.20”		1.30”		1.40”		1.50”		1.60”		1.70”		1.80”		1.90”		2.00”	
cfm	rpm	bhp	rpm	bhp	rpm	bhp	rpm	bhp	rpm	bhp	rpm	bhp	rpm	bhp	rpm	bhp	rpm	bhp	rpm	bhp
2400	1062	0.84	1089	0.91	1114	0.98	1138	1.05	1162	1.12	1185	1.19	1208	1.27	1230	1.34	1250	1.41	1271	1.49
2700	1123	0.97	1149	1.05	1173	1.12	1197	1.20	1220	1.28	1243	1.35	1266	1.43	1287	1.51	1307	1.59	1329	1.68
3000	1185	1.13	1210	1.21	1234	1.29	1257	1.37	1280	1.45	1302	1.53	1324	1.62	1345	1.71	1366	1.79	1386	1.88
3300	1249	1.30	1273	1.39	1297	1.47	1319	1.56	1342	1.65	1363	1.74	1384	1.83	1406	1.92	1425	2.01	1445	2.10
3600	1314	1.50	1338	1.59	1361	1.69	1383	1.78	1405	1.87	1425	1.96	1446	2.06	1467	2.16	1487	2.26	1506	2.35

Notes:

1. For direct drive evaporator fan speed (rpm), refer to the applicable table in the fan performance section.
2. Data includes pressure drop due to standard filters and wet coils.
3. To determine static pressure drop due to other options/accessories, refer to the applicable table in the fan performance section.
4. Direct drive fan motor heat (MBh) = 2.7912 x fan bhp + 0.1388
5. Factory supplied motors, in commercial equipment, are definite purpose motors, specifically designed and tested to operate reliably and continuously at all cataloged conditions. Using the full horsepower range of our fan motors as shown in our tabular data will not result in nuisance tripping or premature motor failure. Our product's warranty will not be affected.

Evaporator Fan Performance

Table 62. Direct drive evaporator fan performance - 7.5 tons high efficiency dual fuel high heat - DHC092H3,4,W downflow airflow

	External Static Pressure (Inches of Water)																			
	.10”		.20”		.30”		.40”		.50”		.60”		.70”		.80”		.90”		1.00”	
cfm	rpm	bhp	rpm	bhp	rpm	bhp	rpm	bhp	rpm	bhp	rpm	bhp	rpm	bhp	rpm	bhp	rpm	bhp	rpm	bhp
2400	759	0.29	800	0.34	845	0.41	884	0.47	920	0.53	956	0.60	989	0.66	1022	0.73	1053	0.80	1083	0.87
2700	844	0.39	879	0.45	918	0.52	958	0.60	992	0.66	1024	0.74	1057	0.81	1087	0.88	1117	0.95	1145	1.03
3000	931	0.52	962	0.59	995	0.66	1031	0.74	1067	0.82	1098	0.90	1127	0.98	1156	1.06	1184	1.14	1211	1.22
3300	1018	0.68	1046	0.75	1075	0.82	1107	0.91	1140	1.00	1172	1.09	1201	1.17	1227	1.26	1254	1.35	1279	1.43
3600	1106	0.87	1132	0.95	1157	1.02	1185	1.11	1215	1.21	1245	1.30	1275	1.40	1301	1.49	1326	1.59	1350	1.68
	External Static Pressure (Inches of Water)																			
	1.10”		1.20”		1.30”		1.40”		1.50”		1.60”		1.70”		1.80”		1.90”		2.00”	
cfm	rpm	bhp	rpm	bhp	rpm	bhp	rpm	bhp	rpm	bhp	rpm	bhp	rpm	bhp	rpm	bhp	rpm	bhp	rpm	bhp
2400	1113	0.94	1141	1.02	1169	1.09	1194	1.17	1220	1.24	1245	1.32	1270	1.40	1292	1.48	1315	1.56	1338	1.64
2700	1174	1.11	1202	1.19	1228	1.27	1254	1.35	1278	1.43	1303	1.52	1328	1.60	1350	1.68	1373	1.77	1395	1.86
3000	1238	1.30	1264	1.38	1289	1.47	1314	1.55	1339	1.64	1363	1.73	1386	1.82	1409	1.92	1431	2.01	1454	2.10
3300	1306	1.52	1330	1.61	1355	1.70	1378	1.79	1402	1.88	1425	1.98	1448	2.08	1470	2.17	1492	2.27	1513	2.37
3600	1374	1.78	1398	1.87	1422	1.97	1445	2.06	1467	2.16	1489	2.26	1510	2.36	1532	2.46	1553	2.56	1575	2.67

Notes:

1. For direct drive evaporator fan speed (rpm), refer to the applicable table in the fan performance section.
2. Data includes pressure drop due to standard filters and wet coils.
3. To determine static pressure drop due to other options/accessories, refer to the applicable table in the fan performance section.
4. Direct drive fan motor heat (MBh) = 2.7912 x fan bhp + 0.1388
5. Factory supplied motors, in commercial equipment, are definite purpose motors, specifically designed and tested to operate reliably and continuously at all cataloged conditions. Using the full horsepower range of our fan motors as shown in our tabular data will not result in nuisance tripping or premature motor failure. Our product's warranty will not be affected.

Table 63. Direct drive evaporator fan performance - 7.5 tons high efficiency dual fuel high heat - DHC092H3,4,W horizontal airflow

External Static Pressure (Inches of Water)																				
	.10”		.20”		.30”		.40”		.50”		.60”		.70”		.80”		.90”		1.00”	
cfm	rpm	bhp	rpm	bhp	rpm	bhp	rpm	bhp	rpm	bhp	rpm	bhp	rpm	bhp	rpm	bhp	rpm	bhp	rpm	bhp
2400	719	0.24	765	0.30	811	0.36	853	0.42	883	0.47	888	0.48	981	0.66	1003	0.71	1020	0.75	1033	0.78
2700	797	0.32	840	0.38	880	0.46	920	0.53	958	0.60	992	0.67	996	0.68	1072	0.85	1107	0.94	1126	1.00
3000	875	0.42	916	0.49	952	0.57	989	0.65	1025	0.73	1059	0.80	1091	0.89	1105	0.93	1108	0.94	1198	1.19
3300	955	0.55	993	0.62	1027	0.70	1060	0.79	1093	0.88	1126	0.96	1157	1.05	1186	1.13	1213	1.22	1216	1.24
3600	1035	0.69	1070	0.77	1103	0.86	1133	0.95	1163	1.05	1194	1.15	1224	1.24	1253	1.33	1280	1.42	1306	1.52
External Static Pressure (Inches of Water)																				
	1.10”		1.20”		1.30”		1.40”		1.50”		1.60”		1.70”		1.80”		1.90”		2.00”	
cfm	rpm	bhp	rpm	bhp	rpm	bhp	rpm	bhp	rpm	bhp	rpm	bhp	rpm	bhp	rpm	bhp	rpm	bhp	rpm	bhp
2400	1045	0.81	1055	0.84	1065	0.87	1074	0.90	1083	0.92	1091	0.95	1099	0.97	1106	1.00	1113	1.02	1119	1.04
2700	1142	1.04	1154	1.09	1166	1.12	1176	1.16	1186	1.19	1195	1.22	1203	1.26	1211	1.28	1218	1.31	1226	1.34
3000	1228	1.29	1247	1.35	1261	1.40	1274	1.45	1285	1.50	1295	1.54	1304	1.58	1313	1.61	1321	1.65	1329	1.69
3300	1220	1.25	1314	1.57	1345	1.69	1363	1.76	1377	1.83	1391	1.89	1402	1.94	1412	1.98	1421	2.03	1430	2.08
3600	1324	1.59	1327	1.61	1330	1.63	1333	1.64	1456	2.14	1476	2.24	1492	2.31	1505	2.38	1516	2.44	1527	2.50

Notes:

1. For direct drive evaporator fan speed (rpm), refer to the applicable table in the fan performance section.
2. Data includes pressure drop due to standard filters and wet coils.
3. To determine static pressure drop due to other options/accessories, refer to the applicable table in the fan performance section.
4. Direct drive fan motor heat (MBh) = 2.7912 x fan bhp + 0.1388
5. Factory supplied motors, in commercial equipment, are definite purpose motors, specifically designed and tested to operate reliably and continuously at all cataloged conditions. Using the full horsepower range of our fan motors as shown in our tabular data will not result in nuisance tripping or premature motor failure. Our product's warranty will not be affected.

Evaporator Fan Performance

Table 64. Direct drive evaporator fan performance - 8.5 tons high efficiency - WHC102H3,4,W downflow airflow

	External Static Pressure (Inches of Water)																			
	.10”		.20”		.30”		.40”		.50”		.60”		.70”		.80”		.90”		1.00”	
cfm	rpm	bhp	rpm	bhp	rpm	bhp	rpm	bhp	rpm	bhp	rpm	bhp	rpm	bhp	rpm	bhp	rpm	bhp	rpm	bhp
2720	812	0.31	857	0.37	899	0.44	935	0.50	976	0.58	1011	0.65	1040	0.72	1068	0.78	1099	0.85	1129	0.92
3060	904	0.42	942	0.49	983	0.57	1017	0.64	1049	0.71	1086	0.80	1119	0.89	1149	0.96	1174	1.03	1197	1.10
3400	997	0.55	1030	0.63	1066	0.71	1103	0.81	1132	0.89	1160	0.96	1193	1.06	1225	1.16	1254	1.25	1279	1.33
3740	1090	0.72	1120	0.80	1152	0.89	1185	0.99	1218	1.09	1244	1.17	1269	1.25	1298	1.36	1329	1.47	1356	1.57
4080	1183	0.92	1211	1.01	1240	1.10	1270	1.20	1301	1.31	1330	1.42	1354	1.51	1377	1.60	1402	1.70	1430	1.82
	External Static Pressure (Inches of Water)																			
	1.10”		1.20”		1.30”		1.40”		1.50”		1.60”		1.70”		1.80”		1.90”		2.00”	
cfm	rpm	bhp	rpm	bhp	rpm	bhp	rpm	bhp	rpm	bhp	rpm	bhp	rpm	bhp	rpm	bhp	rpm	bhp	rpm	bhp
2720	1158	0.99	1186	1.05	1213	1.11	1238	1.18	1264	1.24	1289	1.30	1313	1.36	1336	1.42	1359	1.47	1382	1.53
3060	1226	1.18	1253	1.26	1279	1.33	1305	1.41	1329	1.48	1353	1.55	1377	1.63	1400	1.70	1422	1.76	1444	1.83
3400	1301	1.40	1323	1.48	1347	1.56	1372	1.65	1396	1.74	1421	1.83	1444	1.91	1465	1.99	1487	2.07	1509	2.15
3740	1382	1.67	1406	1.76	1426	1.84	1445	1.92	1465	2.01	1489	2.11	1510	2.20	1533	2.30	1554	2.39	1576	2.49
4080	1457	1.94	1482	2.05	1506	2.16	1527	2.26	1546	2.35	1565	2.44	1583	2.53	1602	2.63	1623	2.73	1643	2.84

Notes:

1. For direct drive evaporator fan speed (rpm), refer to the applicable table in the fan performance section.
2. Data includes pressure drop due to standard filters and wet coils.
3. To determine static pressure drop due to other options/accessories, refer to the applicable table in the fan performance section.
4. Direct drive fan motor heat (MBh) = 2.7912 x fan bhp + 0.1388
5. Factory supplied motors, in commercial equipment, are definite purpose motors, specifically designed and tested to operate reliably and continuously at all cataloged conditions. Using the full horsepower range of our fan motors as shown in our tabular data will not result in nuisance tripping or premature motor failure. Our product's warranty will not be affected.

Table 65. Direct drive evaporator fan performance - 8.5 tons high efficiency - WHC102H3,4,W horizontal airflow

External Static Pressure (Inches of Water)																				
	.10”		.20”		.30”		.40”		.50”		.60”		.70”		.80”		.90”		1.00”	
cfm	rpm	bhp	rpm	bhp	rpm	bhp	rpm	bhp	rpm	bhp	rpm	bhp	rpm	bhp	rpm	bhp	rpm	bhp	rpm	bhp
2720	821	0.31	864	0.38	911	0.45	947	0.52	982	0.58	1015	0.65	1046	0.71	1077	0.78	1107	0.85	1137	0.93
3060	914	0.43	951	0.50	993	0.58	1032	0.66	1063	0.73	1095	0.81	1125	0.88	1153	0.95	1181	1.03	1208	1.10
3400	1008	0.57	1041	0.64	1076	0.73	1115	0.82	1148	0.91	1177	0.99	1204	1.07	1232	1.15	1259	1.24	1284	1.32
3740	1103	0.75	1132	0.82	1163	0.91	1197	1.01	1232	1.11	1262	1.21	1288	1.30	1313	1.38	1339	1.47	1364	1.57
4080	1198	0.95	1225	1.04	1253	1.13	1281	1.22	1314	1.33	1345	1.45	1372	1.55	1397	1.65	1420	1.75	1444	1.84
External Static Pressure (Inches of Water)																				
	1.10”		1.20”		1.30”		1.40”		1.50”		1.60”		1.70”		1.80”		1.90”		2.00”	
cfm	rpm	bhp	rpm	bhp	rpm	bhp	rpm	bhp	rpm	bhp	rpm	bhp	rpm	bhp	rpm	bhp	rpm	bhp	rpm	bhp
2720	1165	1.00	1193	1.07	1220	1.15	1245	1.22	1271	1.30	1296	1.38	1322	1.47	1344	1.55	1368	1.63	1391	1.72
3060	1235	1.18	1261	1.26	1288	1.34	1313	1.43	1337	1.51	1361	1.59	1385	1.68	1408	1.77	1431	1.86	1453	1.95
3400	1310	1.40	1334	1.48	1359	1.57	1382	1.66	1406	1.75	1430	1.84	1453	1.93	1474	2.02	1496	2.12	1518	2.21
3740	1388	1.66	1411	1.75	1433	1.83	1456	1.93	1477	2.02	1500	2.11	1522	2.21	1544	2.31	1565	2.41	1586	2.51
4080	1467	1.95	1489	2.04	1512	2.14	1533	2.24	1554	2.34	1575	2.43	1594	2.53	1616	2.64	1636	2.74	-	-

Notes:

1. For direct drive evaporator fan speed (rpm), refer to the applicable table in the fan performance section.
2. Data includes pressure drop due to standard filters and wet coils.
3. To determine static pressure drop due to other options/accessories, refer to the applicable table in the fan performance section.
4. Direct drive fan motor heat (MBh) = 2.7912 x fan bhp + 0.1388
5. Factory supplied motors, in commercial equipment, are definite purpose motors, specifically designed and tested to operate reliably and continuously at all cataloged conditions. Using the full horsepower range of our fan motors as shown in our tabular data will not result in nuisance tripping or premature motor failure. Our product's warranty will not be affected.

Table 66. Direct drive evaporator fan performance - 8.5 tons high efficiency dual fuel low/medium heat - DHC102H3,4,W downflow airflow

External Static Pressure (Inches of Water)																				
	.10”		.20”		.30”		.40”		.50”		.60”		.70”		.80”		.90”		1.00”	
cfm	rpm	bhp	rpm	bhp	rpm	bhp	rpm	bhp	rpm	bhp	rpm	bhp	rpm	bhp	rpm	bhp	rpm	bhp	rpm	bhp
2720	804	0.27	849	0.31	889	0.36	927	0.42	962	0.47	995	0.52	1027	0.58	1057	0.64	1085	0.70	1113	0.76
3060	894	0.37	934	0.41	972	0.47	1007	0.53	1040	0.59	1072	0.65	1102	0.71	1131	0.77	1159	0.83	1186	0.90
3400	984	0.49	1021	0.54	1056	0.60	1090	0.66	1121	0.73	1151	0.80	1180	0.87	1207	0.93	1234	0.99	1260	1.06
3740	1075	0.64	1110	0.70	1142	0.76	1173	0.82	1203	0.89	1232	0.97	1260	1.05	1286	1.12	1312	1.19	1336	1.26
4080	1166	0.82	1198	0.88	1229	0.94	1259	1.01	1287	1.09	1314	1.16	1340	1.24	1366	1.33	1390	1.42	1414	1.49
External Static Pressure (Inches of Water)																				
	1.10”		1.20”		1.30”		1.40”		1.50”		1.60”		1.70”		1.80”		1.90”		2.00”	
cfm	rpm	bhp	rpm	bhp	rpm	bhp	rpm	bhp	rpm	bhp	rpm	bhp	rpm	bhp	rpm	bhp	rpm	bhp	rpm	bhp
2720	1140	0.82	1165	0.87	1191	0.93	1215	0.99	1238	1.05	1261	1.11	1284	1.18	1305	1.25	1327	1.32	1347	1.39
3060	1211	0.96	1237	1.04	1260	1.10	1284	1.17	1307	1.23	1329	1.29	1351	1.35	1372	1.42	1393	1.49	1414	1.57
3400	1284	1.13	1309	1.20	1332	1.28	1356	1.36	1378	1.44	1400	1.51	1420	1.58	1442	1.65	1461	1.72	1481	1.79
3740	1360	1.33	1383	1.40	1406	1.48	1428	1.56	1451	1.64	1472	1.73	1492	1.81	1512	1.90	1532	1.98	1551	2.06
4080	1437	1.56	1460	1.64	1482	1.72	1503	1.80	1525	1.88	1545	1.97	1565	2.05	1586	2.15	1604	2.23	1623	2.33

Notes:

1. For direct drive evaporator fan speed (rpm), refer to the applicable table in the fan performance section.
2. Data includes pressure drop due to standard filters and wet coils.
3. To determine static pressure drop due to other options/accessories, refer to the applicable table in the fan performance section.
4. Direct drive fan motor heat (MBh) = 2.7912 x fan bhp + 0.1388
5. Factory supplied motors, in commercial equipment, are definite purpose motors, specifically designed and tested to operate reliably and continuously at all cataloged conditions. Using the full horsepower range of our fan motors as shown in our tabular data will not result in nuisance tripping or premature motor failure. Our product's warranty will not be affected.

Table 67. Direct drive evaporator fan performance - 8.5 tons high efficiency dual fuel low/medium heat - DHC102H3,4,W horizontal airflow

External Static Pressure (Inches of Water)																				
	.10”		.20”		.30”		.40”		.50”		.60”		.70”		.80”		.90”		1.00”	
cfm	rpm	bhp	rpm	bhp	rpm	bhp	rpm	bhp	rpm	bhp	rpm	bhp	rpm	bhp	rpm	bhp	rpm	bhp	rpm	bhp
2720	815	0.33	847	0.40	886	0.47	926	0.54	962	0.61	995	0.69	1027	0.76	1058	0.84	1090	0.91	1122	0.99
3060	909	0.45	938	0.52	968	0.60	1004	0.68	1040	0.76	1072	0.84	1103	0.93	1132	1.01	1160	1.10	1187	1.18
3400	1003	0.59	1030	0.68	1056	0.76	1085	0.85	1118	0.94	1150	1.03	1179	1.12	1207	1.21	1234	1.30	1261	1.40
3740	1099	0.77	1123	0.86	1147	0.96	1170	1.05	1198	1.15	1227	1.24	1257	1.34	1285	1.44	1311	1.54	1336	1.64
4080	1194	0.98	1217	1.08	1239	1.18	1260	1.28	1282	1.39	1308	1.50	1335	1.60	1363	1.71	1388	1.81	1413	1.92
External Static Pressure (Inches of Water)																				
	1.10”		1.20”		1.30”		1.40”		1.50”		1.60”		1.70”		1.80”		1.90”		2.00”	
cfm	rpm	bhp	rpm	bhp	rpm	bhp	rpm	bhp	rpm	bhp	rpm	bhp	rpm	bhp	rpm	bhp	rpm	bhp	rpm	bhp
2720	1154	1.07	1184	1.15	1212	1.23	1238	1.31	1262	1.39	1285	1.47	1307	1.55	1329	1.63	1352	1.71	1373	1.79
3060	1214	1.27	1244	1.35	1273	1.44	1301	1.53	1327	1.62	1353	1.72	1376	1.80	1398	1.89	1420	1.98	1440	2.07
3400	1285	1.49	1310	1.59	1335	1.69	1360	1.78	1387	1.87	1412	1.97	1439	2.07	1462	2.17	1486	2.27	1508	2.38
3740	1361	1.75	1384	1.85	1407	1.96	1430	2.06	1452	2.17	1474	2.27	1498	2.37	1522	2.48	1545	2.58	1569	2.70
4080	1437	2.03	1460	2.14	1482	2.26	1503	2.37	1524	2.48	1546	2.60	1566	2.71	1587	2.83	1608	2.95	-	-

Notes:

1. For direct drive evaporator fan speed (rpm), refer to the applicable table in the fan performance section.
2. Data includes pressure drop due to standard filters and wet coils.
3. To determine static pressure drop due to other options/accessories, refer to the applicable table in the fan performance section.
4. Direct drive fan motor heat (MBh) = 2.7912 x fan bhp + 0.1388
5. Factory supplied motors, in commercial equipment, are definite purpose motors, specifically designed and tested to operate reliably and continuously at all cataloged conditions. Using the full horsepower range of our fan motors as shown in our tabular data will not result in nuisance tripping or premature motor failure. Our product's warranty will not be affected.

Evaporator Fan Performance

Table 68. Direct drive evaporator fan performance - 8.5 tons high efficiency dual fuel high heat - DHC102H3,4,W downflow airflow

	External Static Pressure (Inches of Water)																			
	.10”		.20”		.30”		.40”		.50”		.60”		.70”		.80”		.90”		1.00”	
cfm	rpm	bhp	rpm	bhp	rpm	bhp	rpm	bhp	rpm	bhp	rpm	bhp	rpm	bhp	rpm	bhp	rpm	bhp	rpm	bhp
2720	850	0.40	884	0.46	923	0.53	963	0.61	998	0.68	1029	0.75	1061	0.82	1091	0.89	1121	0.96	1149	1.04
3060	948	0.55	978	0.62	1011	0.69	1046	0.77	1081	0.86	1112	0.94	1141	1.02	1169	1.09	1198	1.18	1224	1.26
3400	1047	0.74	1074	0.81	1102	0.88	1132	0.97	1165	1.07	1196	1.16	1226	1.25	1251	1.34	1277	1.42	1302	1.51
3740	1147	0.96	1171	1.04	1196	1.12	1222	1.21	1250	1.31	1280	1.42	1309	1.52	1336	1.62	1361	1.72	1384	1.81
4080	1246	1.23	1269	1.32	1292	1.41	1315	1.50	1339	1.60	1365	1.71	1392	1.82	1419	1.94	1445	2.05	1468	2.15
	External Static Pressure (Inches of Water)																			
	1.10”		1.20”		1.30”		1.40”		1.50”		1.60”		1.70”		1.80”		1.90”		2.00”	
cfm	rpm	bhp	rpm	bhp	rpm	bhp	rpm	bhp	rpm	bhp	rpm	bhp	rpm	bhp	rpm	bhp	rpm	bhp	rpm	bhp
2720	1178	1.12	1205	1.20	1232	1.28	1258	1.37	1283	1.45	1307	1.53	1330	1.62	1354	1.71	1377	1.79	1399	1.88
3060	1251	1.34	1276	1.43	1302	1.51	1327	1.60	1352	1.69	1376	1.79	1398	1.88	1422	1.97	1444	2.07	1465	2.16
3400	1327	1.60	1352	1.69	1377	1.79	1400	1.88	1423	1.98	1446	2.07	1468	2.17	1490	2.27	1513	2.38	1533	2.47
3740	1407	1.91	1431	2.01	1454	2.10	1476	2.20	1498	2.30	1519	2.40	1541	2.51	1562	2.61	1582	2.72	-	-
4080	1491	2.26	1512	2.36	1533	2.47	1554	2.57	1576	2.68	1597	2.79	-	-	-	-	-	-	-	-

Notes:

1. For direct drive evaporator fan speed (rpm), refer to the applicable table in the fan performance section.
2. Data includes pressure drop due to standard filters and wet coils.
3. To determine static pressure drop due to other options/accessories, refer to the applicable table in the fan performance section.
4. Direct drive fan motor heat (MBh) = 2.7912 x fan bhp + 0.1388
5. Factory supplied motors, in commercial equipment, are definite purpose motors, specifically designed and tested to operate reliably and continuously at all cataloged conditions. Using the full horsepower range of our fan motors as shown in our tabular data will not result in nuisance tripping or premature motor failure. Our product's warranty will not be affected.

Table 69. Direct drive evaporator fan performance - 8.5 tons high efficiency dual fuel high heat - DHC102H3,4,W horizontal airflow

External Static Pressure (Inches of Water)																				
	.10”		.20”		.30”		.40”		.50”		.60”		.70”		.80”		.90”		1.00”	
cfm	rpm	bhp	rpm	bhp	rpm	bhp	rpm	bhp	rpm	bhp	rpm	bhp	rpm	bhp	rpm	bhp	rpm	bhp	rpm	bhp
2720	817	0.35	858	0.41	897	0.48	937	0.56	975	0.64	1009	0.71	1042	0.78	1073	0.86	1106	0.94	1137	1.02
3060	908	0.47	947	0.55	980	0.62	1016	0.70	1052	0.79	1086	0.88	1117	0.96	1147	1.04	1176	1.13	1204	1.22
3400	1001	0.62	1037	0.71	1068	0.79	1099	0.88	1131	0.97	1164	1.07	1195	1.17	1224	1.26	1251	1.35	1277	1.44
3740	1094	0.81	1127	0.91	1158	1.00	1185	1.09	1214	1.19	1243	1.29	1272	1.39	1301	1.50	1329	1.61	1354	1.71
4080	1188	1.03	1218	1.14	1248	1.24	1274	1.34	1299	1.44	1325	1.54	1352	1.66	1379	1.77	1406	1.89	1432	2.01
External Static Pressure (Inches of Water)																				
	1.10”		1.20”		1.30”		1.40”		1.50”		1.60”		1.70”		1.80”		1.90”		2.00”	
cfm	rpm	bhp	rpm	bhp	rpm	bhp	rpm	bhp	rpm	bhp	rpm	bhp	rpm	bhp	rpm	bhp	rpm	bhp	rpm	bhp
2720	1166	1.10	1193	1.18	1220	1.26	1245	1.34	1269	1.42	1294	1.50	1318	1.59	1340	1.67	1364	1.76	1385	1.84
3060	1233	1.31	1261	1.40	1288	1.49	1314	1.58	1338	1.67	1362	1.76	1384	1.85	1408	1.94	1429	2.03	1450	2.12
3400	1304	1.54	1329	1.63	1355	1.73	1380	1.83	1406	1.94	1430	2.04	1453	2.14	1475	2.23	1497	2.34	1518	2.43
3740	1378	1.81	1402	1.91	1426	2.01	1450	2.12	1473	2.22	1496	2.33	1520	2.45	1542	2.55	1565	2.67	1587	2.78
4080	1457	2.12	1479	2.23	1502	2.34	1524	2.45	1546	2.56	1567	2.68	1590	2.79	-	-	-	-	-	-

Notes:

1. For direct drive evaporator fan speed (rpm), refer to the applicable table in the fan performance section.
2. Data includes pressure drop due to standard filters and wet coils.
3. To determine static pressure drop due to other options/accessories, refer to the applicable table in the fan performance section.
4. Direct drive fan motor heat (MBh) = 2.7912 x fan bhp + 0.1388
5. Factory supplied motors, in commercial equipment, are definite purpose motors, specifically designed and tested to operate reliably and continuously at all cataloged conditions. Using the full horsepower range of our fan motors as shown in our tabular data will not result in nuisance tripping or premature motor failure. Our product's warranty will not be affected.

Evaporator Fan Performance

Table 70. Direct drive evaporator fan performance - 10 tons high efficiency - WHC120H3,4,W downflow airflow

	External Static Pressure (Inches of Water)																			
	.10”		.20”		.30”		.40”		.50”		.60”		.70”		.80”		.90”		1.00”	
cfm	rpm	bhp	rpm	bhp	rpm	bhp	rpm	bhp	rpm	bhp	rpm	bhp	rpm	bhp	rpm	bhp	rpm	bhp	rpm	bhp
3200	942	0.47	978	0.54	1017	0.63	1053	0.71	1082	0.78	1116	0.87	1150	0.96	1181	1.04	1207	1.12	1231	1.19
3600	1051	0.65	1083	0.73	1116	0.81	1152	0.91	1183	1.00	1209	1.08	1237	1.17	1268	1.27	1298	1.38	1325	1.47
4000	1161	0.87	1190	0.96	1219	1.05	1249	1.15	1282	1.26	1310	1.36	1334	1.45	1357	1.54	1385	1.65	1412	1.76
4400	1272	1.13	1298	1.23	1324	1.33	1351	1.44	1379	1.54	1409	1.67	1435	1.79	1457	1.88	1478	1.98	1501	2.08
4800	1383	1.45	1407	1.56	1431	1.66	1455	1.78	1480	1.89	1506	2.01	1532	2.14	1558	2.28	1579	2.39	1599	2.49
	External Static Pressure (Inches of Water)																			
	1.10”		1.20”		1.30”		1.40”		1.50”		1.60”		1.70”		1.80”		1.90”		2.00”	
cfm	rpm	bhp	rpm	bhp	rpm	bhp	rpm	bhp	rpm	bhp	rpm	bhp	rpm	bhp	rpm	bhp	rpm	bhp	rpm	bhp
3200	1254	1.26	1282	1.35	1307	1.43	1332	1.51	1357	1.59	1381	1.66	1404	1.74	1427	1.82	1449	1.89	1471	1.96
3600	1350	1.56	1372	1.64	1392	1.72	1412	1.80	1437	1.90	1460	1.99	1483	2.08	1504	2.17	1526	2.26	1548	2.35
4000	1440	1.88	1464	1.98	1488	2.08	1508	2.18	1527	2.26	1545	2.35	1564	2.44	1586	2.55	1606	2.65	1627	2.75
4400	1526	2.20	1552	2.33	1576	2.46	1600	2.58	1621	2.69	1642	2.80	1660	2.90	-	-	-	-	-	-
4800	1618	2.60	1639	2.71	1663	2.85	-	-	-	-	-	-	-	-	-	-	-	-	-	-

Notes:

1. For direct drive evaporator fan speed (rpm), refer to the applicable table in the fan performance section.
2. Data includes pressure drop due to standard filters and wet coils.
3. To determine static pressure drop due to other options/accessories, refer to the applicable table in the fan performance section.
4. Direct drive fan motor heat (MBh) = 2.7912 x fan bhp + 0.1388
5. Factory supplied motors, in commercial equipment, are definite purpose motors, specifically designed and tested to operate reliably and continuously at all cataloged conditions. Using the full horsepower range of our fan motors as shown in our tabular data will not result in nuisance tripping or premature motor failure. Our product's warranty will not be affected.
6. For electric heat applications, minimum airflow is set to 320 cfm/ton, unless specified otherwise, values found in electric heat temperature rise table.

Table 71. Direct drive evaporator fan performance - 10 tons high efficiency - WHC120H3,4,W horizontal airflow

External Static Pressure (Inches of Water)																				
	.10”		.20”		.30”		.40”		.50”		.60”		.70”		.80”		.90”		1.00”	
cfm	rpm	bhp	rpm	bhp	rpm	bhp	rpm	bhp	rpm	bhp	rpm	bhp	rpm	bhp	rpm	bhp	rpm	bhp	rpm	bhp
3200	953	0.48	988	0.55	1027	0.64	1067	0.73	1098	0.80	1128	0.88	1157	0.96	1186	1.03	1213	1.11	1239	1.19
3600	1064	0.67	1095	0.75	1126	0.83	1163	0.93	1198	1.03	1226	1.11	1253	1.20	1280	1.29	1306	1.37	1331	1.46
4000	1175	0.90	1203	0.98	1231	1.07	1260	1.17	1294	1.28	1327	1.39	1353	1.49	1377	1.58	1401	1.68	1425	1.78
4400	1288	1.18	1313	1.27	1338	1.36	1364	1.46	1392	1.57	1422	1.70	1452	1.82	1477	1.93	1500	2.04	1522	2.14
4800	1400	1.51	1423	1.61	1446	1.71	1470	1.82	1494	1.93	1519	2.05	1547	2.18	1575	2.32	1600	2.45	1622	2.56
External Static Pressure (Inches of Water)																				
	1.10”		1.20”		1.30”		1.40”		1.50”		1.60”		1.70”		1.80”		1.90”		2.00”	
cfm	rpm	bhp	rpm	bhp	rpm	bhp	rpm	bhp	rpm	bhp	rpm	bhp	rpm	bhp	rpm	bhp	rpm	bhp	rpm	bhp
3200	1265	1.27	1291	1.35	1316	1.43	1342	1.52	1365	1.60	1389	1.69	1412	1.78	1435	1.87	1458	1.96	1479	2.05
3600	1355	1.54	1378	1.63	1401	1.72	1425	1.81	1447	1.90	1471	2.00	1492	2.09	1515	2.19	1536	2.28	1557	2.38
4000	1448	1.87	1471	1.97	1494	2.07	1515	2.16	1536	2.26	1557	2.36	1578	2.46	1598	2.56	1619	2.66	1640	2.77
4400	1543	2.24	1565	2.35	1586	2.46	1607	2.56	1628	2.67	1647	2.77	1667	2.88	1686	2.98	-	-	-	-
4800	1642	2.68	1662	2.79	1682	2.91	1701	3.02	-	-	-	-	-	-	-	-	-	-	-	-

Notes:

1. For direct drive evaporator fan speed (rpm), refer to the applicable table in the fan performance section.
2. Data includes pressure drop due to standard filters and wet coils.
3. To determine static pressure drop due to other options/accessories, refer to the applicable table in the fan performance section.
4. Direct drive fan motor heat (MBh) = 2.7912 x fan bhp + 0.1388
5. Factory supplied motors, in commercial equipment, are definite purpose motors, specifically designed and tested to operate reliably and continuously at all cataloged conditions. Using the full horsepower range of our fan motors as shown in our tabular data will not result in nuisance tripping or premature motor failure. Our product's warranty will not be affected.
6. For electric heat applications, minimum airflow is set to 320 cfm/ton, unless specified otherwise, values found in electric heat temperature rise table.

Evaporator Fan Performance

Table 72. Direct drive evaporator fan performance - 10 tons high efficiency dual fuel low/medium heat - DHC120H3,4,W downflow airflow

	External Static Pressure (Inches of Water)																			
	.10”		.20”		.30”		.40”		.50”		.60”		.70”		.80”		.90”		1.00”	
cfm	rpm	bhp	rpm	bhp	rpm	bhp	rpm	bhp	rpm	bhp	rpm	bhp	rpm	bhp	rpm	bhp	rpm	bhp	rpm	bhp
3200	905	0.22	944	0.28	980	0.33	1015	0.39	1047	0.43	1077	0.47	1106	0.51	1135	0.56	1162	0.60	1187	0.65
3600	1008	0.30	1044	0.36	1077	0.43	1109	0.49	1140	0.55	1168	0.59	1196	0.64	1222	0.69	1249	0.74	1273	0.79
4000	1112	0.40	1145	0.47	1176	0.54	1205	0.60	1234	0.67	1261	0.74	1288	0.79	1313	0.85	1338	0.90	1362	0.95
4400	1217	0.52	1247	0.59	1276	0.67	1304	0.74	1330	0.82	1356	0.89	1381	0.97	1406	1.03	1429	1.09	1451	1.14
4800	1322	0.66	1350	0.74	1377	0.82	1403	0.90	1428	0.98	1452	1.07	1476	1.15	1499	1.23	1522	1.31	1543	1.37
	External Static Pressure (Inches of Water)																			
	1.10”		1.20”		1.30”		1.40”		1.50”		1.60”		1.70”		1.80”		1.90”		2.00”	
cfm	rpm	bhp	rpm	bhp	rpm	bhp	rpm	bhp	rpm	bhp	rpm	bhp	rpm	bhp	rpm	bhp	rpm	bhp	rpm	bhp
3200	1213	0.69	1236	0.74	1260	0.78	1283	0.83	1306	0.88	1328	0.93	1348	0.97	1369	1.02	1389	1.07	1409	1.12
3600	1297	0.84	1321	0.89	1343	0.94	1365	0.99	1387	1.04	1409	1.09	1429	1.14	1449	1.20	1469	1.25	1488	1.30
4000	1385	1.01	1407	1.06	1429	1.12	1450	1.17	1471	1.23	1491	1.28	1512	1.34	1531	1.39	1550	1.45	1570	1.51
4400	1474	1.20	1495	1.26	1516	1.32	1537	1.38	1557	1.44	1577	1.50	1596	1.56	1615	1.62	1634	1.68	1653	1.75
4800	1564	1.43	1586	1.49	1606	1.56	1626	1.62	1645	1.68	1665	1.75	1683	1.81	1702	1.88	1720	1.95	1738	2.01

Notes:

1. For direct drive evaporator fan speed (rpm), refer to the applicable table in the fan performance section.
2. Data includes pressure drop due to standard filters and wet coils.
3. To determine static pressure drop due to other options/accessories, refer to the applicable table in the fan performance section.
4. Direct drive fan motor heat (MBh) = 2.7912 x fan bhp + 0.1388
5. Factory supplied motors, in commercial equipment, are definite purpose motors, specifically designed and tested to operate reliably and continuously at all cataloged conditions. Using the full horsepower range of our fan motors as shown in our tabular data will not result in nuisance tripping or premature motor failure. Our product's warranty will not be affected.

Table 73. Direct drive evaporator fan performance - 10 tons high efficiency dual fuel low/medium heat - DHC120H3,4,W horizontal airflow

	External Static Pressure (Inches of Water)																			
	.10”		.20”		.30”		.40”		.50”		.60”		.70”		.80”		.90”		1.00”	
cfm	rpm	bhp	rpm	bhp	rpm	bhp	rpm	bhp	rpm	bhp	rpm	bhp	rpm	bhp	rpm	bhp	rpm	bhp	rpm	bhp
3200	853	0.34	896	0.42	935	0.50	970	0.57	1004	0.65	1037	0.73	1070	0.81	1101	0.90	1130	0.98	1160	1.07
3600	950	0.47	988	0.55	1025	0.64	1058	0.72	1089	0.81	1120	0.89	1149	0.98	1180	1.08	1209	1.17	1235	1.26
4000	1049	0.63	1081	0.71	1116	0.81	1148	0.91	1177	1.00	1206	1.09	1233	1.19	1260	1.28	1286	1.38	1314	1.49
4400	1148	0.81	1176	0.90	1208	1.01	1239	1.12	1267	1.22	1294	1.33	1320	1.42	1344	1.53	1369	1.63	1394	1.74
4800	1247	1.04	1273	1.14	1301	1.24	1330	1.36	1357	1.48	1384	1.59	1408	1.70	1432	1.81	1455	1.92	1478	2.04
	External Static Pressure (Inches of Water)																			
	1.10”		1.20”		1.30”		1.40”		1.50”		1.60”		1.70”		1.80”		1.90”		2.00”	
cfm	rpm	bhp	rpm	bhp	rpm	bhp	rpm	bhp	rpm	bhp	rpm	bhp	rpm	bhp	rpm	bhp	rpm	bhp	rpm	bhp
3200	1191	1.16	1221	1.25	1248	1.35	1275	1.44	1300	1.53	1325	1.62	1349	1.72	1373	1.81	1396	1.91	1418	2.01
3600	1261	1.36	1287	1.45	1315	1.55	1342	1.66	1367	1.76	1394	1.87	1417	1.97	1441	2.08	1463	2.18	1484	2.28
4000	1339	1.60	1364	1.70	1388	1.80	1411	1.90	1435	2.01	1460	2.12	1484	2.24	1508	2.36	1530	2.47	1553	2.59
4400	1419	1.86	1443	1.98	1466	2.09	1489	2.20	1510	2.31	1532	2.43	1553	2.54	1575	2.65	1597	2.78	1619	2.9
4800	1500	2.16	1523	2.28	1546	2.40	1567	2.52	1589	2.65	1611	2.78	1631	2.9	-	-	-	-	-	-

Notes:
1. For direct drive evaporator fan speed (rpm), refer to the applicable table in the fan performance section.
2. Data includes pressure drop due to standard filters and wet coils.
3. To determine static pressure drop due to other options/accessories, refer to the applicable table in the fan performance section.
4. Direct drive fan motor heat (MBh) = 2.7912 x fan bhp + 0.1388
5. Factory supplied motors, in commercial equipment, are definite purpose motors, specifically designed and tested to operate reliably and continuously at all cataloged conditions. Using the full horsepower range of our fan motors as shown in our tabular data will not result in nuisance tripping or premature motor failure. Our product's warranty will not be affected.

Table 74. Direct drive evaporator fan performance - 10 tons high efficiency dual fuel high heat - DHC120H3,4,W downflow airflow

	External Static Pressure (Inches of Water)																			
	.10”		.20”		.30”		.40”		.50”		.60”		.70”		.80”		.90”		1.00”	
cfm	rpm	bhp	rpm	bhp	rpm	bhp	rpm	bhp	rpm	bhp	rpm	bhp	rpm	bhp	rpm	bhp	rpm	bhp	rpm	bhp
3200	900	0.42	939	0.50	972	0.57	1004	0.64	1037	0.72	1069	0.80	1099	0.88	1127	0.95	1155	1.03	1184	1.12
3600	1005	0.58	1037	0.66	1071	0.74	1099	0.82	1128	0.90	1157	0.99	1186	1.08	1214	1.17	1240	1.26	1265	1.35
4000	1110	0.77	1138	0.86	1170	0.96	1198	1.05	1223	1.13	1249	1.22	1275	1.32	1302	1.42	1327	1.52	1352	1.62
4400	1215	1.01	1241	1.10	1268	1.20	1297	1.31	1321	1.41	1344	1.50	1367	1.60	1391	1.71	1415	1.82	1439	1.93
4800	1321	1.29	1345	1.39	1369	1.49	1395	1.61	1420	1.73	1442	1.83	1463	1.94	1484	2.04	1506	2.16	1529	2.28
	External Static Pressure (Inches of Water)																			
	1.10”		1.20”		1.30”		1.40”		1.50”		1.60”		1.70”		1.80”		1.90”		2.00”	
cfm	rpm	bhp	rpm	bhp	rpm	bhp	rpm	bhp	rpm	bhp	rpm	bhp	rpm	bhp	rpm	bhp	rpm	bhp	rpm	bhp
3200	1212	1.21	1239	1.29	1266	1.38	1291	1.47	1316	1.56	1342	1.65	1367	1.75	1392	1.84	1415	1.94	1438	2.03
3600	1290	1.44	1316	1.53	1341	1.63	1365	1.72	1390	1.82	1414	1.92	1436	2.02	1459	2.12	1482	2.22	1506	2.33
4000	1375	1.72	1398	1.81	1420	1.91	1443	2.01	1466	2.12	1488	2.23	1511	2.33	1534	2.45	1554	2.55	1575	2.66
4400	1462	2.03	1485	2.15	1506	2.25	1527	2.36	1548	2.47	1567	2.57	1588	2.69	1609	2.80	1631	2.93	-	-
4800	1550	2.39	1572	2.51	1593	2.63	1614	2.75	1634	2.87	-	-	-	-	-	-	-	-	-	-

Notes:

1. For direct drive evaporator fan speed (rpm), refer to the applicable table in the fan performance section.
2. Data includes pressure drop due to standard filters and wet coils.
3. To determine static pressure drop due to other options/accessories, refer to the applicable table in the fan performance section.
4. Direct drive fan motor heat (MBh) = 2.7912 x fan bhp + 0.1388
5. Factory supplied motors, in commercial equipment, are definite purpose motors, specifically designed and tested to operate reliably and continuously at all cataloged conditions. Using the full horsepower range of our fan motors as shown in our tabular data will not result in nuisance tripping or premature motor failure. Our product's warranty will not be affected.

Table 75. Direct drive evaporator fan performance - 10 tons high efficiency dual fuel high heat - DHC120H3,4,W horizontal airflow

External Static Pressure (Inches of Water)																				
	.10”		.20”		.30”		.40”		.50”		.60”		.70”		.80”		.90”		1.00”	
cfm	rpm	bhp	rpm	bhp	rpm	bhp	rpm	bhp	rpm	bhp	rpm	bhp	rpm	bhp	rpm	bhp	rpm	bhp	rpm	bhp
3200	868	0.37	906	0.44	943	0.51	980	0.59	1014	0.67	1046	0.74	1078	0.82	1109	0.91	1139	0.99	1168	1.08
3600	969	0.50	1001	0.58	1035	0.66	1068	0.74	1100	0.83	1131	0.92	1160	1.01	1189	1.10	1217	1.19	1244	1.28
4000	1070	0.67	1098	0.75	1129	0.84	1159	0.93	1188	1.02	1218	1.12	1245	1.22	1272	1.32	1298	1.41	1324	1.52
4400	1172	0.87	1197	0.96	1224	1.06	1251	1.16	1279	1.26	1306	1.36	1332	1.46	1358	1.57	1383	1.68	1407	1.79
4800	1274	1.12	1297	1.21	1321	1.31	1346	1.42	1371	1.53	1396	1.64	1421	1.75	1445	1.86	1469	1.98	1493	2.10
External Static Pressure (Inches of Water)																				
	1.10”		1.20”		1.30”		1.40”		1.50”		1.60”		1.70”		1.80”		1.90”		2.00”	
cfm	rpm	bhp	rpm	bhp	rpm	bhp	rpm	bhp	rpm	bhp	rpm	bhp	rpm	bhp	rpm	bhp	rpm	bhp	rpm	bhp
3200	1196	1.16	1225	1.25	1254	1.34	1280	1.43	1306	1.52	1330	1.61	1355	1.71	1378	1.80	1400	1.89	1424	1.99
3600	1271	1.37	1297	1.47	1323	1.57	1347	1.66	1374	1.77	1398	1.86	1423	1.97	1447	2.07	1470	2.17	1492	2.27
4000	1349	1.62	1375	1.72	1399	1.83	1422	1.93	1445	2.03	1468	2.14	1491	2.25	1514	2.36	1538	2.48	1561	2.59
4400	1431	1.90	1455	2.01	1478	2.12	1499	2.23	1523	2.35	1544	2.46	1565	2.57	1587	2.69	1608	2.81	1629	2.92
4800	1515	2.21	1537	2.33	1559	2.45	1581	2.57	1602	2.69	1623	2.82	1643	2.94	-	-	-	-	-	-

Notes:

1. For direct drive evaporator fan speed (rpm), refer to the applicable table in the fan performance section.
2. Data includes pressure drop due to standard filters and wet coils.
3. To determine static pressure drop due to other options/accessories, refer to the applicable table in the fan performance section.
4. Direct drive fan motor heat (MBh) = 2.7912 x fan bhp + 0.1388
5. Factory supplied motors, in commercial equipment, are definite purpose motors, specifically designed and tested to operate reliably and continuously at all cataloged conditions. Using the full horsepower range of our fan motors as shown in our tabular data will not result in nuisance tripping or premature motor failure. Our product's warranty will not be affected.

Fan Performance

Table 76. Standard motor and sheave/fan speed (rpm)

Tons	Unit Model Number	Fan Sheave	6 Turns Open	5 Turns Open	4 Turns Open	3 Turns Open	2 Turns Open	1 Turn Open	Closed
7.5	WSC092H	AK64x1”	N/A	695	751	807	863	919	975
8.5	WSC102H	AK64x1”	N/A	767	807	847	888	928	1036

Note: Factory set at 3 turns open.

Table 77. Standard motor and low static drive accessory sheave/fan speed (rpm)

Tons	Unit Model Number	Fan Sheave	6 Turns Open	5 Turns Open	4 Turns Open	3 Turns Open	2 Turns Open	1 Turn Open	Closed
7.5	WSC092H	AK79x1”	N/A	581	626	671	716	761	805
7.5	WSC092H	AK99x1”	N/A	462	497	533	569	604	640
8.5	WSC102H	AK79x1”	N/A	631	676	721	766	811	856
8.5	WSC102H	AK99x1”	N/A	512	548	583	619	654	690

Note: Factory set at 3 turns open.

Table 78. Oversized motor and drive sheave/fan speed (rpm)

Tons	Unit Model Number	Fan Sheave	6 Turns Open	5 Turns Open	4 Turns Open	3 Turns Open	2 Turns Open	1 Turn Open	Closed
7.5	WSC092H	AK64x1”	N/A	835	891	946	1002	1057	1113
8.5	WSC102H	AK56x1”	N/A	998	1050	1103	1155	1207	1260

Note: Factory set at 3 turns open.

Table 79. Oversized motor and high static drive sheave/fan speed (rpm)

Tons	Unit Model Number	6 Turns Open	5 Turns Open	4 Turns Open	3 Turns Open	2 Turns Open	1 Turn Open	Closed
7.5	WSC092H	N/A	908	968	1029	1090	1150	1211

Note: Factory set at 3 turns open.

Table 80. Direct drive plenum fan settings (rpm vs. voltage)

Potentiometer Voltage	Motor RPM
1	N/A
1.25	N/A
1.5	N/A
1.75	N/A
2	N/A
2.25	325
2.5	402
2.75	465
3	544
3.25	630
3.5	716
3.75	775
4	845
4.25	912
4.5	976
4.75	1044
5	1115
5.25	1203
5.5	1253
5.75	1312
6	1368
6.25	1425
6.5	1475
6.75	1533
7	1581
7.25	1615
7.5	1615

Table 81. Voltage vs. CFM table

PWM% Value	Potentiometer Voltage (Vdc)	CFM/Ton
70	<0.1	320
75	0.7	347
80	1.25	373
85	1.65	400
90	1.95	427
95	2.17	453
100	>2.4	480

Note: Applicable to W/DHC036-060H models

Table 82. Outdoor sound power level - dB (ref. 10 - 12 W)

Tons	Unit Model Number	Octave Center Frequency								Overall
		63	125	250	500	1000	2000	4000	8000	dBA
3	WSC036H	84	81	80	79	76	74	69	63	81
4	WSC048H	81	85	81	81	77	72	69	65	82
5	WSC060H	90	90	84	85	83	78	73	68	87
3	W/DHC036H	84	81	80	79	76	74	69	63	81
4	W/DHC048H	90	90	84	85	83	78	73	68	87
5	W/DHC060H	90	90	84	85	83	78	73	68	87
7.5	WSC092H	85	86	84	84	81	76	72	66	86
8.5	WSC102H	81	89	83	83	81	76	72	66	85
10	WSC120H	86	90	85	83	81	76	72	66	86
6	W/DHC074H	87	87	84	84	81	75	71	66	86
7.5	W/DHC092H	82	89	85	84	81	76	72	67	86
8.5	W/DHC102H	83	87	85	83	80	75	70	65	85
10	W/DHC120H	88	86	87	83	79	75	70	63	85

Note: Tests follow AHRI270-2015.

Table 83. Static pressure drop through accessories (inches water column)

Tons	Unit Model Number	cfm	Standard Filters[a]	2" MERV 8 Filter	2" MERV 13 Filter	Economizer with OA/RA Dampers[b]						Electric Heater Accessory (kW)[c],[d]			
						100% OA	100% RA	100% OA	100% RA	100% OA	100% RA	5-6	9-18	23-36	54
						Downflow		Low Leak[e]		Horizontal					
3	WSC036H	960	0.02	0.03	0.03	0.05	0.01	0.09	0.03	0.05	0.01	0.01	0.02	0.02	—
3	WSC036H	1200	0.03	0.05	0.04	0.07	0.02	0.13	0.05	0.07	0.01	0.02	0.03	0.03	—
3	WSC036H	1440	0.03	0.06	0.04	0.10	0.03	0.19	0.07	0.10	0.01	0.03	0.04	0.04	—
4	WSC048H	1280	0.03	0.06	0.04	0.10	0.03	0.15	0.05	0.09	0.01	0.02	0.03	0.03	—
4	WSC048H	1600	0.04	0.07	0.07	0.13	0.04	0.24	0.08	0.13	0.02	0.04	0.05	0.05	—
4	WSC048H	1920	0.06	0.10	0.08	0.17	0.06	0.34	0.11	0.17	0.02	0.05	0.06	0.08	—
5	WSC060H	1600	0.03	0.06	0.05	0.09	0.01	0.10	0.05	0.05	0.01	0.01	0.01	0.02	—
5	WSC060H	2000	0.05	0.08	0.07	0.11	0.01	0.16	0.08	0.07	0.02	0.02	0.01	0.03	—
5	WSC060H	2400	0.07	0.10	0.10	0.12	0.03	0.23	0.12	0.09	0.03	0.03	0.02	0.04	—
7.5	WSC092H	2400	0.04	0.06	0.12	0.11	0.02	0.23	0.12	0.08	0.02	—	0.02	0.02	—
7.5	WSC092H	3000	0.06	0.09	0.13	0.14	0.05	0.37	0.19	0.12	0.05	—	0.03	0.03	—
7.5	WSC092H	3600	0.09	0.13	0.15	0.21	0.07	0.54	0.27	0.25	0.08	—	0.04	0.05	—
8.5	WSC102H	2720	0.05	0.08	0.13	0.12	0.03	0.30	0.16	0.09	0.04	—	0.02	0.03	—
8.5	WSC102H	3400	0.08	0.11	0.14	0.19	0.06	0.48	0.24	0.18	0.06	—	0.03	0.04	—
8.5	WSC102H	4080	0.12	0.16	0.16	0.30	0.07	0.71	0.35	0.31	0.09	—	0.05	0.06	—
10	WSC120H	3200	0.07	0.10	0.14	0.17	0.05	0.42	0.22	0.14	0.05	—	0.02	0.03	0.05
10	WSC120H	4000	0.11	0.15	0.16	0.26	0.07	0.68	0.34	0.30	0.08	—	0.02	0.03	0.05
10	WSC120H	4800	0.16	0.20	0.18	0.34	0.09	0.99	0.48	0.35	0.10	—	0.03	0.04	0.06
3	D/WHC036H	960	0.02	0.03	0.03	0.05	0.01	0.09	0.03	0.05	0.01	0.01	0.02	0.02	—
3	D/WHC036H	1200	0.03	0.05	0.04	0.07	0.02	0.13	0.05	0.07	0.01	0.02	0.03	0.03	—
3	D/WHC036H	1440	0.03	0.06	0.04	0.10	0.03	0.19	0.07	0.10	0.01	0.03	0.04	0.04	—
4	D/WHC048H	1280	0.03	0.06	0.04	0.10	0.03	0.07	0.03	0.09	0.01	0.02	0.03	0.03	—

Table 83. Static pressure drop through accessories (inches water column) (continued)

Tons	Unit Model Number	cfm	Standard Filters[a]	2" MERV 8 Filter	2" MERV 13 Filter	Economizer with OA/RA Dampers[b]						Electric Heater Accessory (kW)[c],[d]			
						100% OA	100% RA	100% OA	100% RA	100% OA	100% RA	5-6	9-18	23-36	54
						Downflow		Low Leak[e]		Horizontal					
4	D/WHC048H	1600	0.04	0.07	0.07	0.13	0.04	0.10	0.05	0.13	0.02	0.04	0.05	0.05	—
4	D/WHC048H	1920	0.06	0.10	0.08	0.17	0.06	0.15	0.08	0.17	0.02	0.05	0.06	0.08	—
5	D/WHC060H	1600	0.03	0.06	0.05	0.09	0.01	0.10	0.05	0.05	0.01	0.01	0.01	0.02	—
5	D/WHC060H	2000	0.05	0.08	0.07	0.11	0.01	0.16	0.08	0.07	0.02	0.02	0.01	0.03	—
5	D/WHC060H	2400	0.07	0.10	0.10	0.12	0.03	0.23	0.12	0.09	0.03	0.03	0.02	0.04	—
6	W/DHC074	1920	0.03	0.04	0.10	0.09	0.01	0.15	0.08	0.06	0.01	—	0.01	0.01	—
6	W/DHC074	2400	0.04	0.06	0.12	0.11	0.02	0.23	0.12	0.08	0.02	—	0.01	0.01	—
6	W/DHC074	2880	0.06	0.08	0.13	0.13	0.04	0.34	0.18	0.11	0.04	—	0.01	0.02	—
7.5	W/DHC092	1500	0.02	0.03	0.08	0.07	0.01	0.09	0.05	0.04	0.01	—	—	—	—
7.5	W/DHC092	2400	0.04	0.06	0.12	0.11	0.02	0.23	0.12	0.08	0.02	—	0.01	0.01	—
7.5	W/DHC092	3000	0.06	0.09	0.13	0.14	0.05	0.37	0.19	0.12	0.05	—	0.01	0.02	—
7.5	W/DHC092	3600	0.09	0.13	0.15	0.21	0.07	0.54	0.27	0.25	0.08	—	0.02	0.03	—
8.5	W/DHC102	1700	0.02	0.05	0.11	0.07	0.01	0.11	0.06	0.05	0.02	—	—	—	—
8.5	W/DHC102	2720	0.05	0.08	0.13	0.12	0.03	0.30	0.16	0.09	0.04	—	0.01	0.02	—
8.5	W/DHC102	3400	0.08	0.11	0.14	0.19	0.06	0.48	0.24	0.18	0.06	—	0.02	0.02	—
8.5	W/DHC102	4080	0.12	0.16	0.16	0.30	0.07	0.71	0.35	0.31	0.09	—	0.03	0.03	—
10	W/DHC120	2000	0.03	0.06	0.11	0.08	0.03	0.16	0.08	0.07	0.02	—	—	—	—
10	W/DHC120	3200	0.07	0.10	0.14	0.17	0.05	0.42	0.22	0.14	0.05	—	0.02	0.03	0.05
10	W/DHC120	4000	0.11	0.15	0.16	0.26	0.07	0.68	0.34	0.30	0.08	—	0.02	0.03	0.05
10	W/DHC120	4800	0.16	0.20	0.18	0.34	0.09	0.99	0.48	0.35	0.10	—	0.03	0.04	0.06

(a) Tested with standard filters. Difference in pressure drop should be considered when utilizing optional 2" MERV 8 and MERV 13 filters.
(b) OA = Outside Air and RA = Return Air.
(c) Nominal kW ratings at 240, 480, 600 volts.
(d) Electric heaters restricted on applications below 320 cfm/ton.
(e) Low Leak - Downflow only.

Heating Performance Data

Table 84. 3 tons three phase heating capacities (net) WSC036H3,4,W at 1200 cfm

Outdoor Temp (°F)	Integrated Heating Capacity (Btuh/1000) at Indicated Indoor Dry Bulb Temp[a] (°F)				Total Power in Kilowatts at Indicated Indoor Dry Bulb Temp (°F)			
	60	70	75	80	60	70	75	80
-8	12.7	12.1	11.7	11.4	2.4	2.6	2.8	2.9
-3	14.5	13.8	13.5	13.1	2.4	2.7	2.8	3.0
2	16.5	15.7	15.3	15.0	2.5	2.7	2.9	3.0
7	18.5	17.7	17.3	16.9	2.5	2.8	2.9	3.1
12	20.7	19.8	19.4	18.9	2.5	2.8	3.0	3.1
17	22.9	22.0	21.5	21.1	2.6	2.9	3.0	3.1
22	25.3	24.3	23.8	23.3	2.6	2.9	3.0	3.2
27	27.6	26.6	26.0	25.5	2.7	2.9	3.1	3.2
32	30.1	28.9	28.3	27.8	2.7	3.0	3.1	3.3
37	32.5	31.3	30.7	30.1	2.7	3.0	3.2	3.3
42	35.0	33.7	33.0	32.4	2.8	3.0	3.2	3.3
47	37.4	36.0	35.3	34.6	2.8	3.1	3.2	3.4
52	39.8	38.3	37.5	36.8	2.8	3.1	3.3	3.4
57	42.1	40.5	39.7	38.8	2.9	3.1	3.3	3.4
62	44.2	42.5	41.6	40.7	2.9	3.2	3.3	3.5
67	45.9	43.9	43.1	42.1	2.9	3.2	3.3	3.5
72	47.4	45.1	46.1	42.4	2.9	3.2	3.4	3.5

Note: Net heating capacity and power input includes indoor fan heat at AHRI esp. To obtain net heating at other conditions, subtract fan heat at this condition and add fan heat at new condition.

(a) Integrated heating capacities and powers include the effects of defrost in the frost region. All heating capacities and power (kw) are at 70% OD relative humidity and demand defrost cycle.

Table 85. 4 tons three phase heating capacities (net) WSC048H3,4,W at 1600 cfm

Outdoor Temp (°F)	Integrated Heating Capacity (Btuh/1000) at Indicated Indoor Dry Bulb Temp[(a)] (°F)				Total Power in Kilowatts at Indicated Indoor Dry Bulb Temp (°F)			
	60	70	75	80	60	70	75	80
-8	15.8	15.4	15.0	14.6	3.2	3.4	3.6	3.8
-3	18.6	17.8	17.4	17.0	3.1	3.4	3.6	3.8
2	21.2	20.4	20.0	19.6	3.2	3.5	3.7	3.9
7	23.8	23.0	22.4	22.4	3.2	3.6	3.8	4.0
12	26.6	25.8	25.3	24.9	3.3	3.6	3.8	4.0
17	29.4	28.6	28.1	27.7	3.3	3.7	3.9	4.1
22	32.4	31.5	31.0	30.5	3.4	3.7	3.9	4.1
27	35.4	34.4	33.9	33.4	3.4	3.8	4.0	4.2
32	38.5	37.5	36.9	36.4	3.5	3.8	4.0	4.2
37	41.6	40.5	40.0	39.4	3.5	3.9	4.1	4.3
42	44.8	43.7	43.1	42.5	3.5	3.9	4.1	4.4
47	48.1	46.8	46.2	45.6	3.6	4.0	4.2	4.4
52	51.3	50.0	49.3	48.7	3.7	4.0	4.2	4.5
57	54.6	53.1	52.4	51.7	3.7	4.1	4.3	4.5
62	58.0	56.3	55.6	54.6	3.8	4.2	4.4	4.6
67	61.4	59.6	58.7	57.8	3.8	4.2	4.4	4.6
72	64.6	62.0	61.6	60.6	3.9	4.2	4.4	4.7

Note: Net heating capacity and power input includes indoor fan heat at AHRI esp. To obtain net heating at other conditions, subtract fan heat at this condition and add fan heat at new condition.

(a) Integrated heating capacities and powers include the effects of defrost in the frost region. All heating capacities and power (kw) are at 70% OD relative humidity and demand defrost cycle.

Table 86. 5 tons three phase heating capacities (net) WSC060H3,4,W at 2000 cfm

Outdoor Temp (°F)	Integrated Heating Capacity (Btuh/1000) at Indicated Indoor Dry Bulb Temp[a] (°F)				Total Power in Kilowatts at Indicated Indoor Dry Bulb Temp (°F)			
	60	70	75	80	60	70	75	80
-8	18.2	17.2	16.8	16.3	3.7	4.1	4.3	4.5
-3	21.6	20.5	20.0	19.6	3.8	4.2	4.4	4.6
2	25.0	24.0	23.5	23.0	3.8	4.2	4.5	4.7
7	28.6	27.5	26.9	26.2	3.9	4.3	4.6	4.8
12	32.4	31.2	30.6	30.1	4.0	4.4	4.6	4.9
17	36.2	35.0	34.4	33.8	4.0	4.5	4.7	5.0
22	40.1	38.8	38.2	37.6	4.1	4.6	4.8	5.1
27	44.1	42.7	42.1	41.4	4.2	4.6	4.9	5.1
32	47.9	46.7	46.0	45.3	4.2	4.7	4.9	5.2
37	52.0	50.4	50.0	49.2	4.3	4.8	5.0	5.3
42	56.1	54.4	54.0	53.2	4.4	4.8	5.1	5.4
47	60.5	59.0	57.8	56.9	4.5	4.9	5.2	5.5
52	64.8	62.9	62.0	61.1	4.6	5.0	5.3	5.6
57	69.2	67.2	66.2	65.2	4.6	5.1	5.4	5.6
62	73.5	71.3	70.2	69.2	4.7	5.2	5.5	5.7
67	77.7	75.3	74.2	73.0	4.8	5.3	5.6	5.8
72	81.6	79.1	77.9	76.6	4.9	5.4	5.7	5.9

Note: Net heating capacity and power input includes indoor fan heat at AHRI esp. To obtain net heating at other conditions, subtract fan heat at this condition and add fan heat at new condition.

(a) Integrated heating capacities and powers include the effects of defrost in the frost region. All heating capacities and power (kw) are at 70% OD relative humidity and demand defrost cycle.

Table 87. 7.5 tons three phase heating capacities (net) WSC092H3,4,W at 3000 cfm

Outdoor Temp (°F)	Integrated Heating Capacity (MBh) at Indicated Indoor Dry Bulb Temp[a] (°F)				Total Power in Kilowatts at Indicated Indoor Dry Bulb Temp (°F)			
	60	70	75	80	60	70	75	80
-8	32.0	31.3	31.1	31.0	5.8	6.3	6.7	7.0
-3	36.4	35.7	35.5	35.3	5.9	6.5	6.8	7.2
2	40.9	40.3	40.0	39.8	6.0	6.6	6.9	7.3
7	45.8	44.8	44.4	44.2	6.1	6.7	7.0	7.4
12	50.4	49.8	49.5	49.1	6.2	6.8	7.2	7.5
17	55.5	54.5	54.0	53.7	6.3	6.9	7.3	7.7
22	60.8	59.6	59.1	58.7	6.4	7.0	7.4	7.8
27	66.4	65.0	64.4	63.8	6.5	7.1	7.5	7.9
32	72.1	70.6	69.9	69.2	6.6	7.3	7.6	8.0
37	77.8	76.1	75.3	74.5	6.7	7.4	7.7	8.1
42	83.5	81.7	80.8	79.9	6.8	7.5	7.8	8.2
47	89.5	87.5	86.5	85.6	6.9	7.6	7.9	8.3
52	95.7	93.5	92.4	91.3	7.0	7.7	8.1	8.4
57	101.9	99.5	98.2	97.0	7.1	7.8	8.2	8.6
62	108.1	105.3	103.9	102.6	7.3	7.9	8.3	8.7
67	114.0	110.9	109.4	107.9	7.4	8.1	8.4	8.8
72	119.9	116.2	114.4	112.7	7.5	8.2	8.5	8.9

Note: Net heating capacity and power input includes indoor fan heat at AHRI esp. To obtain net heating at other conditions, subtract fan heat at this condition and add fan heat at new condition.

(a) Integrated heating capacities and powers include the effects of defrost in the frost region. All heating capacities and power (kw) are at 70% OD relative humidity and demand defrost cycle.

Table 88. 8.5 tons three phase high stage heating capacities (net) WSC102H3,4,W at 3400 cfm

Outdoor Temp (°F)	Integrated Heating Capacity (Btuh/1000) at Indicated Indoor Dry Bulb Temp[a] (°F)				Total Power in Kilowatts at Indicated Indoor Dry Bulb Temp (°F)			
	60	70	75	80	60	70	75	80
-8	34.2	33.6	33.2	32.6	6.1	6.7	7.0	7.3
-3	38.5	37.8	37.7	37.0	6.2	6.8	7.1	7.5
2	43.0	42.3	41.9	41.5	6.3	6.9	7.3	7.6
7	48.2	47.4	46.6	46.1	6.4	7.1	7.4	7.7
12	52.9	51.9	51.5	51.0	6.5	7.2	7.5	7.9
17	58.0	57.0	56.5	56.0	6.6	7.3	7.6	8.0
22	63.5	62.4	61.8	61.2	6.7	7.4	7.7	8.1
27	69.2	67.9	67.2	66.7	6.8	7.5	7.8	8.2
32	75.1	73.7	73.0	72.3	6.9	7.6	8.0	8.3
37	81.2	79.5	78.7	77.9	7.0	7.7	8.1	8.4
42	87.2	85.5	84.6	83.7	7.2	7.8	8.2	8.6
47	93.6	91.7	90.7	89.7	7.3	7.9	8.3	8.7
52	100.4	98.2	97.1	96.1	7.4	8.1	8.4	8.8
57	107.4	105.0	103.8	102.6	7.5	8.2	8.6	8.9
62	114.7	111.9	110.6	109.3	7.7	8.3	8.7	9.1
67	122.0	119.0	117.5	116.0	7.8	8.5	8.9	9.2
72	129.4	126.0	124.3	122.7	8.0	8.6	9.0	9.4

Note: Net heating capacity and power input includes indoor fan heat at AHRI esp. To obtain net heating at other conditions, subtract fan heat at this condition and add fan heat at new condition.

(a) Integrated heating capacities and powers include the effects of defrost in the frost region. All heating capacities and power (kw) are at 70% OD relative humidity and demand defrost cycle.

Table 89. 10 tons three phase heating capacities (net) WSC120H3,4,W at 4000 cfm

Outdoor Temp (°F)	Integrated Heating Capacity (Btuh/1000) at Indicated Indoor Dry Bulb Temp[a] (°F)				Total Power in Kilowatts at Indicated Indoor Dry Bulb Temp (°F)			
	60	70	75	80	60	70	75	80
-8	35.0	32.5	31.2	30.0	7.4	8.1	8.6	9.0
-3	40.4	38.1	37.0	35.8	7.4	8.2	8.6	9.1
2	46.2	43.9	42.7	41.6	7.5	8.3	8.7	9.2
7	52.5	50.4	49.2	48.1	7.6	8.3	8.8	9.2
12	58.3	56.2	55.0	53.9	7.7	8.4	8.9	9.3
17	64.7	62.6	61.5	60.3	7.7	8.5	8.9	9.4
22	71.3	69.3	68.1	66.9	7.8	8.6	9.0	9.5
27	78.1	76.2	75.0	73.8	7.9	8.7	9.1	9.6
32	85.3	83.4	82.2	80.9	8.0	8.8	9.2	9.7
37	92.5	90.5	89.3	87.9	8.1	8.9	9.3	9.8
42	99.8	97.8	96.5	95.1	8.2	9.0	9.4	9.9
47	107.4	105.4	104.0	102.5	8.3	9.1	9.5	10.0
52	115.3	113.3	111.8	110.3	8.5	9.3	9.7	10.1
57	123.6	121.4	119.9	118.2	8.6	9.4	9.8	10.3
62	132.0	129.6	128.0	126.2	8.8	9.6	10.0	10.4
67	140.4	137.8	136.0	134.0	8.9	9.7	10.1	10.6
72	148.7	145.6	143.7	141.5	9.1	9.9	10.3	10.7

Note: Net heating capacity and power input includes indoor fan heat at AHRI esp. To obtain net heating at other conditions, subtract fan heat at this condition and add fan heat at new condition.

(a) Integrated heating capacities and powers include the effects of defrost in the frost region. All heating capacities and power (kw) are at 70% OD relative humidity and demand defrost cycle.

Table 90. 3 tons three phase high stage heating capacities (net) W/DHC036H3,H4,HW at 1200 cfm

Outdoor Temp (°F)	Integrated Heating Capacity (Btuh/1000) at Indicated Indoor Dry Bulb Temp[a] (°F)				Total Power in Kilowatts at Indicated Indoor Dry Bulb Temp (°F)			
	60	70	75	80	60	70	75	80
-8	8.0	7.2	6.7	6.3	1.9	2.1	2.2	2.4
-3	10.0	9.1	8.6	8.1	2.0	2.2	2.3	2.4
2	12.0	11.6	10.5	10.0	2.0	2.3	2.4	2.5
7	14.1	13.1	12.6	12.0	2.1	2.3	2.4	2.5
12	16.2	15.2	14.7	14.1	2.1	2.4	2.5	2.6
17	18.5	17.4	16.8	16.3	2.2	2.4	2.5	2.6
22	20.8	19.7	19.1	18.5	2.2	2.4	2.6	2.7
27	23.2	22.0	21.4	20.8	2.2	2.5	2.6	2.7
32	25.4	24.3	23.7	23.1	2.3	2.5	2.6	2.8
37	28.1	26.8	26.1	25.4	2.3	2.5	2.7	2.8
42	30.7	29.3	28.6	27.9	2.3	2.6	2.7	2.8
47	33.4	32.2	31.3	30.5	2.4	2.6	2.7	2.9
52	36.3	34.8	34.0	33.2	2.4	2.7	2.8	2.9
57	38.5	37.0	36.3	35.5	2.5	2.7	2.8	3.0
62	41.1	39.6	38.8	38.0	2.5	2.7	2.9	3.0
67	43.7	42.1	41.3	40.5	2.5	2.8	2.9	3.0
72	46.3	44.6	43.8	43.0	2.6	2.8	3.0	3.1

Note: Net heating capacity and power input includes indoor fan heat at AHRI esp. To obtain net heating at other conditions, subtract fan heat at this condition and add fan heat at new condition.

(a) Integrated heating capacities and powers include the effects of defrost in the frost region. All heating capacities and power (kw) are at 70% OD relative humidity and demand defrost cycle.

Table 91. 3 tons three phase low stage heating capacities (net) W/DHC036H3,H4,HW at 840 cfm

Outdoor Temp (°F)	Integrated Heating Capacity (Btuh/1000) at Indicated Indoor Dry Bulb Temp [a](°F)				Total Power in Kilowatts at Indicated Indoor Dry Bulb Temp (°F)			
	60	70	75	80	60	70	75	80
22	13.5	12.4	11.9	11.3	1.72	1.88	1.97	2.06
27	15.3	14.3	13.7	13.2	1.73	1.89	1.98	2.07
32	17.2	16.1	15.6	15.0	1.73	1.90	1.99	2.08
37	19.1	18.0	17.5	16.9	1.74	1.91	2.00	2.09
42	21.1	20.0	19.4	18.8	1.75	1.92	2.00	2.10
47	22.9	21.9	21.3	20.7	1.75	1.92	2.01	2.11
52	25.0	23.8	23.2	22.6	1.76	1.93	2.02	2.11
57	27.0	25.7	25.1	24.4	1.76	1.93	2.02	2.12
62	28.9	27.6	27.0	26.3	1.76	1.93	2.03	2.12
67	30.8	29.4	28.7	27.9	1.76	1.94	2.03	2.13
72	32.8	31.2	30.5	29.7	1.76	1.93	2.03	2.13

Note: Net heating capacity and power input includes indoor fan heat at AHRI esp. To obtain net heating at other conditions, subtract fan heat at this condition and add fan heat at new condition.

(a) Integrated heating capacities and powers include the effects of defrost in the frost region. All heating capacities and power (kw) are at 70% OD relative humidity and demand defrost cycle.

Table 92. 4 tons three phase high stage heating capacities (net) W/DHC048H3,H4,HW at 1600 cfm

Outdoor Temp (°F)	Instantaneous Heating Capacity (Btuh/1000) at Indicated Indoor Dry Bulb Temp (°F)				Total Power in Kilowatts at Indicated Indoor Dry Bulb Temp (°F)			
	60	70	75	80	60	70	75	80
-8	10.51	9.90	9.68	9.22	2.76	3.02	3.17	3.33
-3	13.12	12.67	12.22	11.86	2.80	3.07	3.22	3.38
2	16.15	15.40	15.02	14.62	2.83	3.11	3.27	3.43
7	19.14	18.13	17.84	17.43	2.88	3.17	3.32	3.49
12	22.20	21.29	20.77	20.32	2.92	3.21	3.37	3.54
17	25.33	24.33	23.84	23.36	2.97	3.26	3.42	3.60
22	28.53	27.46	26.93	26.41	3.01	3.31	3.48	3.65
27	31.78	30.64	30.07	29.52	3.06	3.36	3.53	3.71
32	35.07	33.86	32.99	32.66	3.10	3.42	3.59	3.77
37	38.20	37.08	36.40	35.83	3.16	3.47	3.64	3.82
42	41.69	40.34	39.40	39.03	3.20	3.52	3.70	3.88
47	45.01	43.78	42.92	42.02	3.26	3.59	3.75	3.95
52	48.53	46.91	46.12	45.33	3.32	3.64	3.82	4.01
57	51.57	49.99	49.21	48.44	3.35	3.68	3.86	4.05
62	54.71	53.06	52.23	51.41	3.40	3.73	3.91	4.10
67	57.72	56.57	56.30	54.20	3.44	3.80	3.99	4.15
72	61.43	59.39	57.64	57.02	3.51	3.84	4.02	4.25

Note: Net heating capacity and power input includes indoor fan heat at AHRI esp. To obtain net heating at other conditions, subtract fan heat at this condition and add fan heat at new condition.

Table 93. 4 tons three phase low stage heating capacities (net) W/DHC048H3,H4,HW at 1120 cfm

Outdoor Temp (°F)	Instantaneous Heating Capacity (Btuh/1000) at Indicated Indoor Dry Bulb Temp (°F)				Total Power in Kilowatts at Indicated Indoor Dry Bulb Temp (°F)			
	60	70	75	80	60	70	75	80
22	18.20	17.05	16.45	15.82	2.24	2.51	2.65	2.80
27	20.73	19.57	18.97	18.34	2.26	2.53	2.68	2.83
32	23.30	22.13	21.52	20.90	2.27	2.55	2.70	2.85
37	25.90	24.72	24.10	23.47	2.28	2.57	2.72	2.88
42	28.53	27.32	26.69	26.05	2.30	2.58	2.74	2.90
47	31.14	29.89	29.25	28.60	2.31	2.60	2.76	2.92
52	33.70	32.40	31.75	31.08	2.32	2.61	2.77	2.93
57	36.18	34.82	34.14	33.45	2.32	2.62	2.78	2.94
62	38.27	37.12	36.40	35.68	2.33	2.62	2.78	2.94
67	40.75	39.20	38.42	37.67	2.31	2.60	2.76	2.93
72	42.51	41.00	40.18	39.36	2.29	2.58	2.73	2.90

Note: Net heating capacity and power input includes indoor fan heat at AHRI esp. To obtain net heating at other conditions, subtract fan heat at this condition and add fan heat at new condition.

Table 94. 5 tons three phase high stage heating capacities (net) W/DHC060H3,H4,HW at 2000 cfm

Outdoor Temp (°F)	Instantaneous Heating Capacity (Btuh/1000) at Indicated Indoor Dry Bulb Temp (°F)				Total Power in Kilowatts at Indicated Indoor Dry Bulb Temp (°F)			
	60	70	75	80	60	70	75	80
-8	17.63	16.83	16.42	15.98	3.37	3.69	3.88	4.07
-3	20.85	20.00	19.56	19.13	3.43	3.76	3.95	4.15
2	24.19	23.28	22.81	22.35	3.48	3.83	4.02	4.22
7	27.58	26.40	26.76	25.81	3.54	3.89	4.08	4.29
12	31.23	30.17	29.65	29.12	3.59	3.95	4.14	4.36
17	34.92	33.79	33.21	32.65	3.64	4.01	4.20	4.42
22	38.71	37.50	36.88	36.28	3.70	4.06	4.26	4.48
27	42.59	41.29	40.64	39.99	3.75	4.12	4.32	4.54
32	46.54	44.87	44.47	43.78	3.80	4.18	4.38	4.60
37	50.28	48.78	48.32	47.60	3.86	4.24	4.44	4.66
42	54.34	52.70	52.26	51.50	3.92	4.30	4.51	4.73
47	58.65	57.22	56.00	55.12	3.99	4.38	4.59	4.81
52	63.03	61.12	60.17	59.22	4.06	4.45	4.66	4.89
57	67.39	65.36	64.33	63.19	4.14	4.53	4.74	4.95
62	71.78	69.55	68.44	66.99	4.22	4.61	4.83	5.03
67	76.09	73.66	72.45	71.27	4.31	4.70	4.92	5.14
72	80.14	77.61	75.30	74.75	4.40	4.80	4.99	5.28

Note: Net heating capacity and power input includes indoor fan heat at AHRI esp. To obtain net heating at other conditions, subtract fan heat at this condition and add fan heat at new condition.

Table 95. 5 tons three phase low stage heating capacities (net) W/DHC060H3,H4,HW at 1400 cfm

Outdoor Temp (°F)	Instantaneous Heating Capacity (Btuh/1000) at Indicated Indoor Dry Bulb Temp (°F)				Total Power in Kilowatts at Indicated Indoor Dry Bulb Temp (°F)			
	60	70	75	80	60	70	75	80
22	24.25	23.31	22.79	22.25	2.88	3.21	3.39	3.57
27	27.16	26.16	25.62	25.06	2.90	3.23	3.41	3.60
32	30.12	29.06	28.49	27.91	2.91	3.24	3.43	3.62
37	33.10	31.97	31.38	30.77	2.92	3.26	3.44	3.64
42	36.14	34.94	34.31	33.67	2.94	3.28	3.46	3.65
47	39.17	37.89	37.23	36.55	2.95	3.29	3.48	3.67
52	41.92	40.47	40.09	39.14	2.97	3.31	3.49	3.68
57	45.15	43.67	42.93	42.17	2.97	3.31	3.49	3.68
62	48.11	46.42	45.57	44.87	2.98	3.32	3.50	3.68
67	51.09	49.26	48.34	47.41	2.97	3.30	3.48	3.67
72	53.97	51.92	50.93	49.92	2.95	3.28	3.46	3.64

Note: Net heating capacity and power input includes indoor fan heat at AHRI esp. To obtain net heating at other conditions, subtract fan heat at this condition and add fan heat at new condition.

Table 96. 6 tons three phase low stage heating capacities (net) W/DHC074H3,4,W at 1680 cfm

Outdoor Temp (°F)	Integrated Heating Capacity (Mbh) at Indicated Indoor Dry Bulb Temp (°F)				Total Power in Kilowatts at Indicated Indoor Dry Bulb Temp (°F)			
	60	70	75	80	60	70	75	80
22	25.2	24.2	23.7	23.2	2.91	3.18	3.33	3.48
27	28.1	27.0	26.4	25.9	2.92	3.20	3.34	3.50
32	31.0	29.8	29.2	28.7	2.93	3.21	3.36	3.51
37	33.7	32.7	32.1	31.4	2.95	3.22	3.36	3.52
42	36.6	35.4	34.9	34.2	2.96	3.23	3.37	3.53
47	39.7	38.3	37.5	36.8	2.95	3.23	3.37	3.53
52	42.3	40.7	39.9	39.1	2.95	3.22	3.37	3.52
57	44.6	42.9	42.0	41.2	2.96	3.22	3.36	3.51
62	47.6	45.8	44.8	43.9	2.98	3.25	3.39	3.54
67	50.6	48.6	47.5	46.4	3.00	3.27	3.43	3.58
72	53.4	51.3	50.2	49.1	3.02	3.29	3.43	3.60

Note: Net heating capacity and power input includes indoor fan heat at AHRI esp. To obtain net heating at other conditions, subtract fan heat at this condition and add fan heat at new condition.

Table 97. 6 tons three phase high stage heating capacities (net) W/DHC074H3,4,W at 2400 cfm

Outdoor Temp (°F)	Integrated Heating Capacity (Mbh) at Indicated Indoor Dry Bulb Temp (°F)				Total Power in Kilowatts at Indicated Indoor Dry Bulb Temp (°F)			
	60	70	75	80	60	70	75	80
-8	23.0	22.4	22.1	21.9	4.78	5.33	5.62	5.93
-3	27.1	26.4	26.1	25.8	4.89	5.45	5.74	6.05
2	31.4	30.7	30.3	30.0	5.00	5.55	5.85	6.16
7	35.6	34.8	34.6	34.2	5.10	5.66	5.95	6.27
12	40.5	39.6	39.1	38.7	5.18	5.74	6.04	6.36
17	44.9	43.9	43.5	43.3	5.27	5.84	6.14	6.45
22	49.9	48.7	48.2	47.7	5.36	5.92	6.22	6.54
27	55.0	53.7	53.1	52.5	5.43	6.00	6.30	6.62
32	59.8	58.8	58.1	57.5	5.49	6.07	6.38	6.70
37	65.6	64.0	63.3	62.5	5.57	6.14	6.45	6.77
42	70.9	69.2	68.4	67.5	5.63	6.20	6.51	6.83
47	76.5	74.6	73.6	72.7	5.70	6.27	6.58	6.91
52	82.1	80.0	78.9	77.9	5.77	6.34	6.65	6.97
57	87.6	85.3	84.1	83.0	5.84	6.41	6.71	7.03
62	93.0	90.4	89.1	87.8	5.90	6.46	6.77	7.09
67	98.0	95.1	93.6	92.2	5.96	6.51	6.81	7.13
72	102.7	99.5	97.8	96.2	6.02	6.58	6.87	7.18

Note: Net heating capacity and power input includes indoor fan heat at AHRI esp. To obtain net heating at other conditions, subtract fan heat at this condition and add fan heat at new condition.

Table 98. 7.5 tons three phase low stage heating capacities (net) W/DHC092H3,4,W at 2100 cfm

Outdoor Temp (°F)	Integrated Heating Capacity (Mbh) at Indicated Indoor Dry Bulb Temp (°F)				Total Power in Kilowatts at Indicated Indoor Dry Bulb Temp (°F)			
	60	70	75	80	60	70	75	80
22	31.5	29.9	29.1	28.3	3.40	3.73	3.91	4.10
27	35.1	33.4	32.6	31.7	3.43	3.77	3.95	4.13
32	38.7	37.0	36.1	35.2	3.46	3.80	3.98	4.17
37	42.3	40.5	39.6	38.7	3.49	3.83	4.01	4.20
42	46.0	44.2	43.2	42.3	3.52	3.87	4.05	4.24
47	49.8	47.8	46.8	45.8	3.55	3.90	4.08	4.27
52	53.5	51.4	50.4	49.3	3.58	3.93	4.11	4.30
57	57.1	54.9	53.8	52.7	3.61	3.96	4.14	4.33
62	60.9	58.5	57.3	56.0	3.65	4.00	4.18	4.37
67	64.4	61.7	60.3	59.0	3.69	4.04	4.22	4.41
72	67.3	64.3	62.7	61.2	3.70	4.05	4.23	4.42

Note: Net heating capacity and power input includes indoor fan heat at AHRI esp. To obtain net heating at other conditions, subtract fan heat at this condition and add fan heat at new condition.

Table 99. 7.5 tons three phase high stage heating capacities (net) W/DHC092H3,4,W at 3000 cfm

Outdoor Temp (°F)	Integrated Heating Capacity (Mbh) at Indicated Indoor Dry Bulb Temp (°F)				Total Power in Kilowatts at Indicated Indoor Dry Bulb Temp (°F)			
	60	70	75	80	60	70	75	80
-8	27.5	26.6	26.1	25.6	5.58	6.19	6.51	6.86
-3	32.4	31.4	30.9	30.3	5.67	6.28	6.62	6.97
2	37.3	36.3	35.8	35.2	5.76	6.38	6.72	7.08
7	42.6	41.3	40.7	40.1	5.85	6.48	6.83	7.19
12	47.7	46.4	46	45.4	5.95	6.58	6.93	7.30
17	53.2	51.8	51.1	50.4	6.04	6.68	7.03	7.41
22	58.8	57.3	56.6	55.8	6.13	6.78	7.14	7.51
27	64.7	63	62.2	61.4	6.22	6.88	7.24	7.62
32	70.2	68.9	68	67.1	6.30	6.98	7.34	7.73
37	76.6	74.7	73.7	72.7	6.40	7.07	7.44	7.83
42	82.7	80.6	79.5	78.4	6.49	7.17	7.54	7.93
47	88.9	86.6	85.4	84.3	6.59	7.28	7.65	8.04
52	95.2	92.7	91.4	90.2	6.69	7.38	7.75	8.14
57	101.4	98.7	97.4	96	6.79	7.48	7.85	8.24
62	107.7	104.7	103.1	101.6	6.89	7.58	7.95	8.34
67	114.1	110.6	108.9	107.2	7.01	7.69	8.06	8.44
72	120	116.3	114.4	112.4	7.12	7.80	8.17	8.56

Note: Net heating capacity and power input includes indoor fan heat at AHRI esp. To obtain net heating at other conditions, subtract fan heat at this condition and add fan heat at new condition.

Table 100. 8.5 tons three phase low stage heating capacities (net) W/DHC102H3,4,W at 2380 cfm

Outdoor Temp (°F)	Integrated Heating Capacity (Mbh) at Indicated Indoor Dry Bulb Temp (°F)				Total Power in Kilowatts at Indicated Indoor Dry Bulb Temp (°F)			
	60	70	75	80	60	70	75	80
22	31.6	29.8	28.8	27.8	3.12	3.43	3.60	3.77
27	35.2	33.3	32.3	31.3	3.14	3.46	3.62	3.79
32	38.8	36.8	35.8	34.8	3.16	3.48	3.65	3.82
37	42.4	40.4	39.5	38.3	3.18	3.50	3.67	3.84
42	46.3	44.2	43.2	42.0	3.21	3.52	3.69	3.87
47	50.2	48.0	47.0	45.7	3.23	3.55	3.72	3.90
52	54.3	51.9	50.7	49.4	3.25	3.58	3.75	3.92
57	58.4	56.0	54.7	53.4	3.27	3.59	3.77	3.95
62	62.5	59.9	58.6	57.3	3.29	3.62	3.79	3.97
67	66.5	64.2	62.7	61.2	3.31	3.66	3.83	4.01
72	71.3	68.3	66.8	65.2	3.35	3.68	3.86	4.04

Note: Net heating capacity and power input includes indoor fan heat at AHRI esp. To obtain net heating at other conditions, subtract fan heat at this condition and add fan heat at new condition.

Table 101. 8.5 tons three phase high stage heating capacities (net) W/DHC102H3,4,W at 3400 cfm

Outdoor Temp (°F)	Integrated Heating Capacity (Mbh) at Indicated Indoor Dry Bulb Temp (°F)				Total Power in Kilowatts at Indicated Indoor Dry Bulb Temp (°F)			
	60	70	75	80	60	70	75	80
-8	30.3	28.3	27.0	25.8	5.65	6.27	6.59	6.93
-3	35.2	33.1	31.9	30.8	5.77	6.40	6.73	7.07
2	40.2	38.1	37.0	35.7	5.89	6.52	6.86	7.21
7	45.7	43.6	42.5	41.2	5.99	6.63	6.98	7.33
12	51.0	48.8	47.7	46.4	6.10	6.75	7.10	7.46
17	56.7	54.5	53.3	52.1	6.21	6.86	7.21	7.58
22	62.7	60.4	59.2	57.9	6.31	6.97	7.33	7.70
27	68.9	66.5	65.3	64.0	6.41	7.08	7.44	7.82
32	74.6	72.9	71.6	70.2	6.49	7.19	7.55	7.93
37	81.9	79.2	77.9	76.5	6.60	7.29	7.66	8.04
42	88.5	85.7	84.3	82.8	6.70	7.39	7.76	8.15
47	95.4	92.4	90.9	89.4	6.80	7.50	7.87	8.27
52	102.6	99.5	97.9	96.2	6.91	7.61	7.99	8.39
57	109.9	106.5	104.8	103.1	7.02	7.73	8.11	8.51
62	117.3	113.7	111.9	110.0	7.13	7.84	8.23	8.63
67	124.7	120.8	118.8	116.9	7.25	7.96	8.34	8.75
72	131.9	127.9	125.7	123.6	7.36	8.08	8.46	8.87

Note: Net heating capacity and power input includes indoor fan heat at AHRI esp. To obtain net heating at other conditions, subtract fan heat at this condition and add fan heat at new condition.

Table 102. 10 tons three phase low stage heating capacities (net) W/DHC120H3,4,W at 2800 cfm

Outdoor Temp (°F)	Integrated Heating Capacity (Mbh) at Indicated Indoor Dry Bulb Temp (°F)				Total Power in Kilowatts at Indicated Indoor Dry Bulb Temp (°F)			
	60	70	75	80	60	70	75	80
22	40.5	39.1	38.4	37.6	3.72	4.08	4.27	4.48
27	44.4	42.9	42.1	41.3	3.74	4.11	4.30	4.51
32	48.4	46.8	45.9	45.1	3.77	4.14	4.34	4.55
37	52.4	50.7	49.8	48.9	3.80	4.17	4.37	4.59
42	56.4	54.8	53.8	52.9	3.84	4.21	4.41	4.63
47	60.6	58.8	57.9	56.9	3.88	4.25	4.45	4.67
52	64.8	63.0	61.9	60.9	3.92	4.29	4.50	4.72
57	69.3	67.1	66.0	64.8	3.96	4.34	4.55	4.76
62	73.5	71.1	69.9	68.7	4.01	4.39	4.60	4.82
67	77.6	75.1	73.8	72.5	4.06	4.45	4.65	4.87
72	82.0	79.1	77.6	76.1	4.15	4.53	4.74	4.95

Note: Net heating capacity and power input includes indoor fan heat at AHRI esp. To obtain net heating at other conditions, subtract fan heat at this condition and add fan heat at new condition.

Table 103. 10 tons three phase high stage heating capacities (net) W/DHC120H3,4,W at 4000 cfm

Outdoor Temp (°F)	Integrated Heating Capacity (Mbh) at Indicated Indoor Dry Bulb Temp (°F)				Total Power in Kilowatts at Indicated Indoor Dry Bulb Temp (°F)			
	60	70	75	80	60	70	75	80
-8	44.6	43.7	43.5	42.9	7.40	8.17	8.60	9.05
-3	50.6	49.3	49.2	48.6	7.50	8.30	8.73	9.20
2	56.0	55.0	54.5	54.0	7.60	8.42	8.87	9.34
7	62.6	61.6	61.0	59.9	7.69	8.53	9.00	9.49
12	68.4	67.2	66.7	66.1	7.80	8.66	9.13	9.63
17	75.1	73.8	73.1	72.5	7.90	8.77	9.25	9.76
22	82.0	80.6	79.9	79.2	8.00	8.89	9.38	9.90
27	89.3	87.7	86.9	86.1	8.11	9.01	9.51	10.03
32	96.8	95.0	94.2	93.3	8.22	9.13	9.64	10.17
37	104.2	102.3	101.3	100.4	8.33	9.26	9.76	10.30
42	111.8	109.7	108.6	107.6	8.44	9.38	9.89	10.43
47	119.7	117.4	116.2	115.1	8.56	9.52	10.03	10.58
52	127.9	125.3	124.1	122.8	8.70	9.66	10.18	10.74
57	136.3	133.4	132.0	130.6	8.85	9.82	10.34	10.89
62	144.8	141.5	139.9	138.4	9.01	9.98	10.50	11.05
67	153.2	149.5	147.7	145.9	9.18	10.14	10.66	11.21
72	161.0	157.1	155.1	153.1	9.34	10.31	10.83	11.37

Note: Net heating capacity and power input includes indoor fan heat at AHRI esp. To obtain net heating at other conditions, subtract fan heat at this condition and add fan heat at new condition.

Table 104.Auxiliary electric heat capacity[a]

Tons	Unit Model Number	Total[b]		No. of Stages	Stage1		Stage 2	
		kW Input[c]	MBh Output		kW Input	MBh Output	kW Input	MBh Output
3	W*C036H3,4,W	6.00	20.48	1	6.00	20.48	—	—
3	W*C036H3,4,W	12.00	40.97	2	6.00	20.48	6.00	20.48
3	W*C036H3,4,W	17.40	59.40	2	8.70	29.70	8.70	29.70
4	W*C048H3,4,W	6.00	20.48	1	6.00	20.48	—	—
4	W*C048H3,4,W	12.00	40.97	2	6.00	20.48	6.00	20.48
4	W*C048H3,4,W	17.40	59.40	2	8.70	29.70	8.70	29.70
5	W*C060H3,4,W	6.00	20.48	1	6.00	20.48	—	—
5	W*C060H3,4,W	12.00	40.97	2	6.00	20.48	6.00	20.48
5	W*C060H3,4,W	17.40	59.40	2	8.70	29.70	8.70	29.70
5	W*C060H3,4,W	23.00	78.52	2	8.70	29.70	14.30	48.82
7.5	WSC092H3,4/WHC092H3,4,W	9	30.73	1	9	30.73	—	—
7.5	WSC092H3,4/WHC092H3,4,W	18	61.45	1	18	61.45	—	—
7.5	WSC092H3,4/WHC092H3,4,W	27	92.18	2	18	61.45	9	30.73
7.5	WSC092H3,4/WHC092H3,4,W	36	122.9	2	18	61.45	18	61.45
8.5	WSC102H3,4/WHC102H3,4	9	30.73	1	9	30.73	—	—
8.5	WSC102H3,4,W/WHC102H3,4,W	18	61.45	1	18	61.45	—	—
8.5	WSC102H3,4,W/WHC102H3,4,W	27	92.18	2	18	61.45	9	30.73
8.5	WSC102H3,4,W/WHC102H3,4,W	36	122.9	2	18	61.45	18	61.45
10	WSC120H3,4,W/WHC120H3,4,W	18	61.45	1	18	61.45	—	—
10	WSC120H3,4,W/WHC120H3,4,W	27	92.18	2	18	61.45	9	30.73
10	WSC120H3,4,W/WHC120H3,4,W	36	122.9	2	18	61.45	18	61.45
10	WSC120H3,4,W/WHC120H3,4,W	54	184.36	2	36	122.9	18	61.45

(a) 600V is not available on high efficiency units.
(b) Heaters are rated at 240V,380V,480V and 600V. For other than rated voltage, CAP= (voltage/rated voltage)^2 x rated cap.
(c) All input/output does not include indoor fan power or heat.

Table 105.Auxiliary gas fired heating capacities - high efficiency

Tons	Unit Model Number	Heating Input MBh[a]	Heating Output MBh	Air Temp Rise, °F
3	DHC036H(3,4,W)*(L,X)	60/42	48.6/34	20-50
3	DHC036H(3,4,W)*(M,Y)	80/56	64.8/45.3	35-65
3	DHC036H(3,4,W)*(H,Z)	100/70	81/56.7	45-75
4	DHC048H(3,4,W)*(L,X)	60/42	48.6/34	15-45
4	DHC048H(3,4,W)*(M,Y)	100/70	81/56.7	30-60
4	DHC048H(3,4,W)*(H,Z)	130/91	105.3/73.7	45-75
5	DHC060H(3,4,W)*(L,X)	60/42	48.6/34	10-40
5	DHC060H(3,4,W)*(M,Y)	100/70	81/56.7	25-55
5	DHC060H(3,4,W)*(H,Z)	150/105	121.5/85	40-70
6	DHC074H(3,4,W)*(L,X)	80/80	64.8	15-45
6	DHC074H(3,4,W)*(M,Y)	120/120	97.2	20-50
6	DHC074H(3,4,W)*(H,Z)	150/105	121.5/85.05	25-55
7.5	DHC092H(3,4,W)*(L,X)	120/120	97.2	20-50
7.5	DHC092H(3,4,W)*(M,Y)	150/105	121.5/85.05	20-50

Table 105.Auxiliary gas fired heating capacities - high efficiency (continued)

Tons	Unit Model Number	Heating Input MBh[(a)]	Heating Output MBh	Air Temp Rise, °F
7.5	DHC092H(3,4,W)*(H,Z)	200/140	162/113.4	35-65
8.5	DHC102H(3,4,W)*(L,X)	120/120	97.2	20-50
8.5	DHC102H(3,4,W)*(M,Y)	150/105	121.5/85.05	20-50
8.5	DHC102H(3,4,W)*(H,Z)	200/140	162/113.4	35-65
10	DHC120H(3,4,W)*(L,X)	150/105	121.5/85.05	20-50
10	DHC120H(3,4,W)*(M,Y)	200/140	162/113.4	25-55
10	DHC120H(3,4,W)*(H,Z)	250/175	202.5/141.75	35-65

Note: Ratings shown are for elevations up to 2,000 ft. For higher elevations, reduce ratings at a rate of 4% per 1,000 ft. elevation.

(a) For two stage heaters (input or output), second stage is total heating capacity (Second Stage/First Stage).

Table 106.Electric heater voltage correction factors (applicable to auxiliary heat capacity)

Nominal Voltage	Distribution Voltage	Capacity Multiplier
240	208	0.751
240	230	0.918
240	240	1.000
480	440	0.840
480	460	0.918
480	480	1.000
600	540	0.810
600	575	0.918
600	600	1.000

Table 107. 3 to 5 tons air temperature rise across electric heaters (°F)

		3 Tons[(a)] 1200 cfm	4 Tons 1600 cfm	5 Tons[(b)] 2000 cfm
kW	Stages	Three Phase W*C036H3,4,W	Three Phase W*C048H3,4,W	Three Phase W*C060H3,4,W
6.00	1	18.5	10.5	11.4
12.00	2	36.2	22.3	21.5
17.40	2	48.2	33.0	30.0
17.60	2	—	—	—
23.0	2	—	—	38.8

Notes:
1. For minimum design airflow, see airflow performance table for each unit.
2. To calculate temp rise at different airflow, use the following formula: Temp. rise across electric heater = kWx3414/1.08xCFM.

(a) The minimum allowable airflow for a 3 ton with a 17.4 kW heater is 1080 cfm.
(b) The minimum allowable airflow for a 5 ton unit with a 23.0 kW heater is 1900 cfm.

Table 108. 6 to 10 tons air temperature rise across electric heaters (°F)

kW	Stages	6 Tons 2000 cfm	7.5 Tons 3000 cfm	8.5 Tons 3400 cfm	10 Tons 4000 cfm[(a)]
		WHC074H3,4,W	WSC092H3,4,W WHC092H3,4,W	WSC102H3,4,W WHC102H3,4,W	WSC120H3,4,W WHC120H3,4,W
9.0	1	14.2	9.5	9.5	—
18.0	1	28.5	19.0	19.0	14.2
27.0	2	42.7	28.5	28.5	21.3
36.0	2	56.9	37.9	37.9	28.5
54.0	2	—	—	—	42.7

Notes:
1. For minimum design airflow, see airflow performance table for each unit.
2. To calculate temp rise at different airflow, use the following formula: Temp. rise across electric heater = kWx3414/1.08xCFM.

(a) Minimum allowable airflow with a 54 kW heater for the WSC120H is 4000 cfm.

Controls

ReliaTel™

Zone sensors re the building occupant's comfort control devices. The following zone sensor options are available for units with ReliaTel™ control.

Note: *Zone sensor required for units configured for single zone VAV indoor fan control to enable single zone VAV functionality.*

Economizer Controls

The standard equipment offering is a fixed dry bulb changeover control. In addition, there are two optional controls, enthalpy and differential enthalpy control.

Enthalpy Control

Replaces the dry bulb control with a wet bulb changeover controller which has a fully adjustable setpoint. Enthalpy control offers a higher level of comfort control, along with energy savings potential, than the standard dry bulb control. This is due to the additional wet bulb sensing capability.

Differential Enthalpy

Differential enthalpy replaces the standard dry bulb control with two enthalpy sensors that compare total heat content of the indoor air and outdoor air to determine the most efficient air source. This control option offers the highest level of comfort control, plus energy efficiency, available.

Remote Potentiometer

Minimum position setting of economizer can be remotely adjusted with this accessory.

Remote Sensor

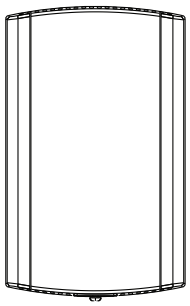

Sensor(s) available for all zone sensors to provide remote sensing capabilities.

Manual Changeover

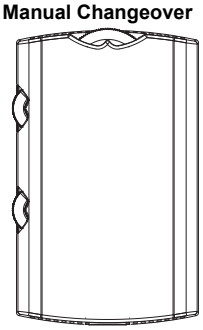

Heat, Cool or Off System Switch. Fan Auto or Off Switch. One temperature setpoint lever.

Manual/Automatic Changeover

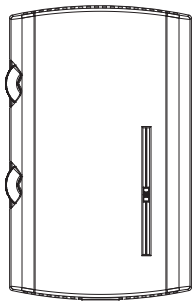

Auto, Heat, Cool or Off System Switch. Fan Auto or Off Switch. Two temperature setpoint levers.

Manual/Automatic Changeover - Status Indicator

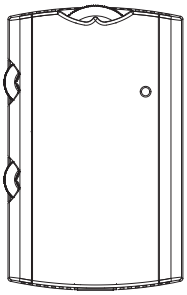

Auto, Heat, Cool or Off System Switch. Fan Auto or Off Switch. Two temperature setpoint levers. Includes a status indicator.

Manual/Automatic Changeover

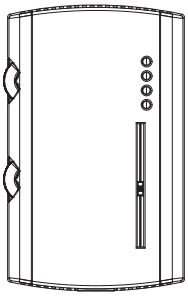

Auto, Heat, Cool or Off System Switch. Fan Auto or Off Switch. Two temperature setpoint levers. Status Indication LED lights, System On, Heat, Cool, or Service.

Digital Display Programmable Thermostat (1H/1C)

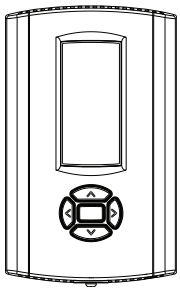

One heat/One Cool Auto changeover digital display thermostat.

Digital Display Thermostat (3H/2C)

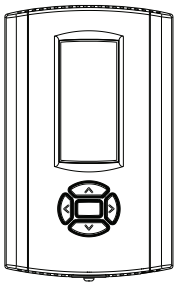

Three Heat, Two Cool Auto changeover digital display thermostat.

Digital Display Programmable Thermostat (3H/2C)

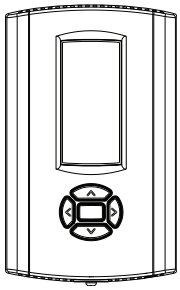

Three Heat/Two Cool Auto changeover digital display thermostat. 7-day programmable stat with night setback is available.

Programmable Night Setback

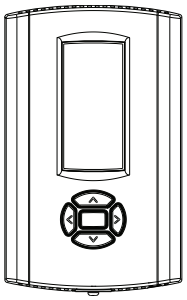

Auto or manual changeover with seven-day programming. Keyboard selection of Heat, Cool, Fan, Auto, or On. All programmable sensors have System On, Heat, Cool, Service LED/indicators as standard. Night Setback Sensors have one (1) Occupied, one (1) Un-occupied, and one (1) Override program per day.

Wireless Zone Sensor

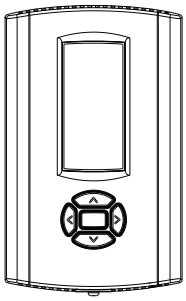

LCD display that provides heat, cool, auto or off. Includes two temperature setpoints and a lockable setting with °F or °C indicators.

CO_2 Sensing

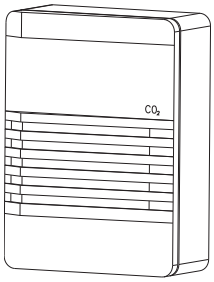

The CO_2 sensor shall have the ability to monitor space occupancy levels within the building by measuring the parts per million of CO_2 (Carbon Dioxide) in the air. As the CO_2 levels increase, the outside air damper modulates to meet the CO_2 space ventilation requirements. The CO_2 accessory shall be available as field installed.

Touchscreen Programmable Thermostat (2H/2C)

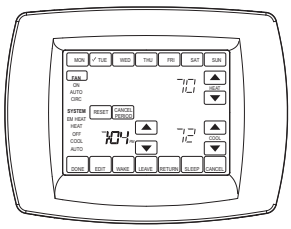

Two Heat/Two Cool programmable thermostat with touch screen digital display. Menu-driven programming. Effortless set-up. Program each day separately with no need to copy multiple days. All programming can be done on one screen. Easy to read and use. Large, clear backlit digital display.

Digital Display Programmable Thermostat with Built-In Relative Humidity Sensing (3H/2C)

Three Heat, Two Cool digital display thermostat with built-in humidity control and display. This thermostat combines both humidity and dry bulb into one. Fully programmable with night setback.

Differential Pressure Switches

This factory or field-installed option allows individual fan failure and dirty filter indication. The fan failure switch will disable all unit functions and “flash” the Service LED on the zone sensor. The dirty filter switch will light the Service LED on the zone sensor and will allow continued unit operation.

RA Remote Sensor

Return air remote sensor which can be mounted in the return air duct to report return air temperature.

Room Remote Sensor

Space remote sensor which can be mounted on the wall to report/control from a remote location in the space.

Communication Interfaces

BACnet® Communication Interface

This option shall be provided to allow the unit to communicate directly with a generic open protocol BACnet® MS/TP Network Building Automation System Controls.

Trane® Air-Fi® Wireless Communication - Factory Installed

Air-Fi Wireless communication shall be factory installed and tested. Air-Fi Wireless conforms to ANSI/ASHRAE Standard 135-2016 (BACnet®/ZigBee®[1]).

Trane® Communication Interface (TCI)

This factory or field-installed micro-processor interface allows the unit to communicate to Trane® Integrated Comfort™ system.

[1] ZigBee is a registered trademark of the ZigBee Alliance.

LonTalk® Communications Interface - Factory or Field Installed

The LonTalk® communications interface allows the unit to communicate as a Tracer® LCI-V device or directly with a generic open protocol BACnet® MS/TP Network Building Automation System Controls.

Electrical Data

Table 109.Unit wiring - standard efficiency

Tons	Unit Model Number	Voltage Range	Standard Indoor Fan Motor[a]		Oversized Indoor Fan Motor		Optional EBM Indoor Fan Motor	
			MCA	Max Fuse Size or Max Circuit Breaker	MCA	Max Fuse Size or Max Circuit Breaker	MCA	Max Fuse Size or Max Circuit Breaker
3	WSC036H3	187-253	26	40	29	40	-	-
3	WSC036H4	414-506	11	15	13	15	-	-
3	WSC036HW	517-633	11	15	11	15	-	-
4	WSC048H3	187-253	27	40	28	40	-	-
4	WSC048H4	414-506	12	15	13	15	-	-
4	WSC048HW	517-633	12	15	12	15	-	-
5	WSC060H3	187-253	31	45	32	45	-	-
5	WSC060H4	414-506	15	20	15	20	-	-
5	WSC060HW	517-633	13	15	13	15	-	-
7.5	WSC092H3	187-253	40	60	46	70	44	60
7.5	WSC092H4	414-506	18	25	21	30	20	30
7.5	WSC092HW	517-633	14	20	16	20	20	25
8.5	WSC102H3	187-253	45	70	48	70	46	70
8.5	WSC102H4	414-506	20	30	22	30	21	30
8.5	WSC102HW	517-633	16	20	17	25	21	25
10	WSC120H3	187-253	54	80	-	-	-	-
10	WSC120H4	414-506	24	35	-	-	-	-
10	WSC120HW	517-633	23	30	-	-	-	-

(a) The standard motor for 3-phase models (3 to 5 and 10 ton) is a multispeed, direct drive motor. The standard motor for 3-phase (7.5 to 8.5 tons) is a belt drive motor.

Table 110. Unit wiring - high efficiency

Tons	Unit Model Number	Voltage Range	Standard Indoor Fan Motor[a]		Oversized Indoor Fan Motor	
			MCA	Max Fuse Size or Max Circuit Breaker	MCA	Max Fuse Size or Max Circuit Breaker
3	W/DHC036H3	187-253	23	30	20	30
3	W/DHC036H4	414-506	13	15	10	15
3	W/DHC036HW	517-633	9	15	—	—
4	W/DHC048H3	187-253	29	40	24	35
4	W/DHC048H4	414-506	14	15	11	15
4	W/DHC048HW	517-633	10	15	—	—
5	W/DHC060H3	187-253	32	45	27	40
5	W/DHC060H4	414-506	15	20	12	15
5	W/DHC060HW	517-633	12	15	—	—
6	W/DHC074H3	187-253	42	50	-	-
6	W/DHC074H4	414-506	19	25	-	-
6	W/DHC074HW	517-633	21	25	-	-
7.5	W/DHC092H3	187-253	43	50	-	-
7.5	W/DHC092H4	414-506	20	25	-	-
7.5	W/DHC092HW	517-633	22	25	-	-
8.5	W/DHC102H3	187-253	46	60	-	-

Table 110. Unit wiring - high efficiency (continued)

Tons	Unit Model Number	Voltage Range	Standard Indoor Fan Motor[a]		Oversized Indoor Fan Motor	
			MCA	Max Fuse Size or Max Circuit Breaker	MCA	Max Fuse Size or Max Circuit Breaker
8.5	W/DHC102H4	414-506	22	25	-	-
8.5	W/DHC102HW	517-633	23	25	-	-
10	W/DHC120H3	187-253	49	60	-	-
10	W/DHC120H4	414-506	24	30	-	-
10	W/DHC120HW	517-633	23	30	-	-

(a) The standard motor for all models is a multispeed, direct drive motor.

Table 111.Unit wiring with electric heat (single point connection) - standard efficiency

Tons	Unit Model Number	Heater Model Number	Heater kW Rating[a]	Control Stages	Standard Indoor Fan Motor		Oversized Indoor Fan Motor		Optional EBM Fan Motor	
					MCA	Max Fuse Size or Max Circuit Breaker	MCA	Max Fuse Size or Max Circuit Breaker	MCA	Max Fuse Size or Max Circuit Breaker
208/230 Volts Three Phase										
3	WSC036H3	BAYHTRE306*	4.5/6.0	1	42/44	50/50	44/47	50/50	-	-
3	WSC036H3	BAYHTRE312*	9.0/12.0	2	57/62	60/70	60/65	60/70	-	-
3	WSC036H3	BAYHTRY317*	13.1/17.4	2	71/78	80/80	74/81	80/90	-	-
4	WSC048H3	BAYHTRE306*	4.5/6.0	1	43/45	50/50	44/46	50/50	-	-
4	WSC048H3	BAYHTRE312*	9.0/12.0	2	58/63	60/70	63/68	60/70	-	-
4	WSC048H3	BAYHTRY317*	13.1/17.4	2	72/79	80/80	74/84	80/90	-	-
5	WSC060H3	BAYHTRX306*	4.5/6.0	1	47/50	60/60	48/50	60/60	-	-
5	WSC060H3	BAYHTRX312*	9.0/12.0	2	63/68	70/70	63/68	70/70	-	-
5	WSC060H3	BAYHTRY318*	13.1/17.4	2	77/84	80/90	77/84	80/90	-	-
5	WSC060H3	BAYHTRY323	17.3/23.0	2	91/101	100/110	92/101	100/110	-	-
7.5	WSC092H3	BAYHTRU309*	6.8/9.0	1	63/67	80/80	69/73	90/90		
7.5	WSC092H3	BAYHTRA309*	6.8/9.0	1	-	-	-	-	67/71	80/90
7.5	WSC092H3	BAYHTRU318*	13.5/18.0	1	87/94	100/100	93/100	100/110	-	-
7.5	WSC092H3	BAYHTRA318*	13.5/18.0	1	-	-	-	-	91/98	100/110
7.5	WSC092H3	BAYHTRU327*	20.3/27.0	2	110/121	110/125	116/127	125/150	-	-
7.5	WSC092H3	BAYHTRA327*	20.3/27.0	2	-	-	-	-	114/125	125/125
7.5	WSC092H3	BAYHTRU336*	27.0/36.0	2	134/148	150/150	140/154	150/175		
7.5	WSC092H3	BAYHTRA336*	27.0/36.0	2	-	-	-	-	138/152	150/175
8.5	WSC102H3	BAYHTRU309*	6.8/9.0	1	68/72	90/90	71/75	90/90	-	-
8.5	WSC102H3	BAYHTRA309*	6.8/9.0	1	-	-	-	-	69/73	90/90
8.5	WSC102H3	BAYHTRU318*	13.5/18.0	1	92/99	100/110	95/102	110/110	-	-
8.5	WSC102H3	BAYHTRA318*	13.5/18.0	1	-	-	-	-	93/100	110/110
8.5	WSC102H3	BAYHTRU327*	20.3/27.0	2	115/126	125/150	118/129	125/150	-	-
8.5	WSC102H3	BAYHTRA327*	20.3/27.0	2	-	-	-	-	116/127	125/150
8.5	WSC102H3	BAYHTRU336*	27.0/36.0	2	138/153	150/175	142/156	150/175	-	-
8.5	WSC102H3	BAYHTRA336*	27.0/36.0	2	-	-	-	-	139/154	150/175
10	WSC120H3	BAYHTRA318*	13.5/18.0	1	101/108	110/125	-	-	-	-

Table 111.Unit wiring with electric heat (single point connection) - standard efficiency (continued)

Tons	Unit Model Number	Heater Model Number	Heater kW Rating[a]	Control Stages	Standard Indoor Fan Motor		Oversized Indoor Fan Motor		Optional EBM Fan Motor	
					MCA	Max Fuse Size or Max Circuit Breaker	MCA	Max Fuse Size or Max Circuit Breaker	MCA	Max Fuse Size or Max Circuit Breaker
10	WSC120H3	BAYHTRA327*	20.3/27.0	2	124/135	125/150	-	-	-	-
10	WSC120H3	BAYHTRA336*	27.0/36.0	2	147/162	150/175	-	-	-	-
10	WSC120H3	BAYHTRA354*	40.6/54.0	2	194/184	200/200	-	-	-	-
460 Volts Three Phase										
3	WSC036H4	BAYHTRE406*	6	1	20	20	23	25	-	-
3	WSC036H4	BAYHTRE412*	12	2	29	30	32	35	-	-
3	WSC036H4	BAYHTRY417*	17.4	2	37	40	40	40	-	-
4	WSC048H4	BAYHTRE406*	6	1	21	25	22	25	-	-
4	WSC048H4	BAYHTRE412*	12	2	30	30	32	35	-	-
4	WSC048H4	BAYHTRY417*	17.4	2	38	40	40	40	-	-
5	WSC060H4	BAYHTRX406*	6	1	24	25	25	30	-	-
5	WSC060H4	BAYHTRX412*	12	2	33	35	34	35	-	-
5	WSC060H4	BAYHTRY418*	17.4	2	41	45	42	45	-	-
5	WSC060H4	BAYHTRY423*	23	2	50	50	51	60	-	-
7.5	WSC092H4	BAYHTRU409*	9	1	32	40	35	40	-	-
7.5	WSC092H4	BAYHTRA409*	9	1	-	-	-	-	34	40
7.5	WSC092H4	BAYHTRU418*	18	1	45	50	48	50	-	-
7.5	WSC092H4	BAYHTRA418*	18	1	-	-	-	-	47	50
7.5	WSC092H4	BAYHTRU427*	27	2	59	60	62	70	-	-
7.5	WSC092H4	BAYHTRA427*	27	2	-	-	-	-	61	70
7.5	WSC092H4	BAYHTRU436*	36	2	72	80	75	80	-	-
7.5	WSC092H4	BAYHTRA436*	36	2	-	-	-	-	74	80
8.5	WSC102H4	BAYHTRU409*	9	1	34	40	35	40	-	-
8.5	WSC102H4	BAYHTRA409*	9	1	-	-	-	-	34	40
8.5	WSC102H4	BAYHTRU418*	18	1	47	50	49	50	-	-
8.5	WSC102H4	BAYHTRA418*	18	1	-	-	-	-	48	50
8.5	WSC102H4	BAYHTRU427*	27	2	61	70	62	70	-	-
8.5	WSC102H4	BAYHTRA427*	27	2	-	-	-	-	61	70
8.5	WSC102H4	BAYHTRU436*	36	2	74	80	76	80	-	-
8.5	WSC102H4	BAYHTRA436*	36	2	-	-	-	-	75	80
10	WSC120H4	BAYHTRA418*	18	1	51	60	-	-	-	-
10	WSC120H4	BAYHTRA427*	27	2	64	70	-	-	-	-
10	WSC120H4	BAYHTRA436*	36	2	78	80	-	-	-	-
10	WSC120H4	BAYHTRA454*	54	2	89	100	-	-	-	-

Table 111.Unit wiring with electric heat (single point connection) - standard efficiency (continued)

Tons	Unit Model Number	Heater Model Number	Heater kW Rating[(a)]	Control Stages	Standard Indoor Fan Motor		Oversized Indoor Fan Motor		Optional EBM Fan Motor	
					MCA	Max Fuse Size or Max Circuit Breaker	MCA	Max Fuse Size or Max Circuit Breaker	MCA	Max Fuse Size or Max Circuit Breaker
575 Volts Three Phase										
3	WSC036HW	BAYHTREW06*	6	1	19	20	19	20	-	-
3	WSC036HW	BAYHTREW12*	12	2	26	30	26	30	-	-
3	WSC036HW	BAYHTRYW17*	17.4	2	32	35	32	35	-	-
4	WSC048HW	BAYHTREW06*	6	1	19	20	19	20	-	-
4	WSC048HW	BAYHTREW12*	12	2	26	30	26	30	-	-
4	WSC048HW	BAYHTRYW17*	17.4	2	33	35	33	35	-	-
5	WSC060HW	BAYHTREW06*	6	1	20	20	20	20	-	-
5	WSC060HW	BAYHTREW12*	12	2	27	30	27	30	-	-
5	WSC060HW	BAYHTREW18*	17.4	2	33	35	33	35	-	-
5	WSC060HW	BAYHTREW23*	23	2	40	40	40	40	-	-
7.5	WSC092HW	BAYHTRUW18*	18	1	36	40	38	40	-	-
7.5	WSC092HW	BAYHTRAW18*	18	1	-	-	-	-	42	45
7.5	WSC092HW	BAYHTRUW27*	27	2	47	50	49	50	-	-
7.5	WSC092HW	BAYHTRAW27*	27	2	-	-	-	-	53	60
7.5	WSC092HW	BAYHTRUW36*	36	2	58	60	60	60	-	-
7.5	WSC092HW	BAYHTRAW36*	36	2	-	-	-	-	64	70
8.5	WSC102HW	BAYHTRUW18*	18	1	38	40	39	40	-	-
8.5	WSC102HW	BAYHTRAW18*	18	1	-	-	-	-	43	45
8.5	WSC102HW	BAYHTRUW27*	27	2	49	50	49	50	-	-
8.5	WSC102HW	BAYHTRAW27*	27	2	-	-	-	-	54	60
8.5	WSC102HW	BAYHTRUW36*	36	2	59	60	60	60	-	-
8.5	WSC102HW	BAYHTRAW36*	36	2	-	-	-	-	64	70
10	WSC120HW	BAYHTRAW18*	18	1	44	50	-	-	-	-
10	WSC120HW	BAYHTRAW27*	27	2	55	60	-	-	-	-
10	WSC120HW	BAYHTRAW36*	36	2	66	70	-	-	-	-
10	WSC120HW	BAYHTRAW54*	54	2	75	80	-	-	-	-

(a) The standard motor for 3-phase models (3 to 5 and 10 ton) is a multispeed, direct drive motor. The standard motor for 3-phase (7.5 to 8.5 tons) is a belt drive motor.

Table 112.Unit wiring with electric heat (single point connection) - high efficiency

Tons	Unit Model Number	Heater Model Number	Heater kW Rating[a]	Control Stages	Standard Indoor Fan Motor		Oversized Indoor Fan Motor	
					MCA	Max Fuse Size or Max Circuit Breaker	MCA	Max Fuse Size or Max Circuit Breaker
208/230 Volts Three Phase								
3	WHC036H3	BAYHTRE306*	4.5/6.0	1	39/41	45/45	36/38	40/45
3	WHC036H3	BAYHTRE312*	9.0/12.0	2	55/59	60/60	52/56	60/60
3	WHC036H3	BAYHTRY317*	13.1/17.4	2	69/76	70/80	66/73	70/80
4	WHC048H3	BAYHTRX306*	4.5/6.0	1	45/47	50/50	39/42	45/50
4	WHC048H3	BAYHTRX312*	9.0/12.0	2	60/65	60/70	55/60	60/60
4	WHC048H3	BAYHTRY318*	13.1/17.4	2	74/81	80/90	69/76	70/80
5	WHC060H3	BAYHTRX306*	4.5/6.0	1	48/50	60/60	43/45	50/50
5	WHC060H3	BAYHTRX312*	9.0/12.0	2	63/68	70/70	58/63	60/70
5	WHC060H3	BAYHTRY318*	13.1/17.4	2	77/84	80/90	72/79	80/80
5	WHC060H3	BAYHTRY323*	17.3/23.0	2	92/101	100/110	87/96	90/100
6	WHC074H3	BAYHTRA309*	6.8/9.0	1	65/69	70/70	-	-
6	WHC074H3	BAYHTRA318*	13.5/18.0	1	89/96	90/100	-	-
6	WHC074H3	BAYHTRA327*	20.3/27.0	2	112/123	125/125	-	-
6	WHC074H3	BAYHTRA336*	27.0/36.0	2	136/150	150/150	-	-
7.5	WHC092H3	BAYHTRA309*	6.8/9.0	1	67/70	70/70	-	-
7.5	WHC092H3	BAYHTRA318*	13.5/18.0	1	90/97	90/100	-	-
7.5	WHC092H3	BAYHTRA327*	20.3/27.0	2	113/124	125/125	-	-
7.5	WHC092H3	BAYHTRA336*	27.0/36.0	2	137/151	150/175	-	-
8.5	WHC102H3	BAYHTRA309*	6.8/9.0	1	69/73	80/80	-	-
8.5	WHC102H3	BAYHTRA318*	13.5/18.0	1	93/100	100/100	-	-
8.5	WHC102H3	BAYHTRA327*	20.3/27.0	2	116/127	125/150	-	-
8.5	WHC102H3	BAYHTRA336*	27.0/36.0	2	140/154	150/175	-	-
10	WHC120H3	BAYHTRB318*	13.5/18.0	1	96/103	100/110	-	-
10	WHC120H3	BAYHTRB327*	20.3/27.0	2	119/130	125/150	-	-
10	WHC120H3	BAYHTRB336*	27.0/36.0	2	142/157	150/175	-	-
10	WHC120H3	BAYHTRB354*	40.6/54.0	2	189/179	200/200	-	-
460 Volts Three Phase								
3	WHC036H4	BAYHRTE406*	6	1	22	25	19	20
3	WHC036H4	BAYHTRE412*	12	2	31	35	28	30
3	WHC036H4	BAYHTRY417*	17.4	2	39	40	36	40
4	WHC048H4	BAYHTRX406*	6	1	23	25	20	20
4	WHC048H4	BAYHTRX412*	12	2	32	35	29	30
4	WHC048H4	BAYHTRY418*	17.4	2	40	40	37	40
5	WHC060H4	BAYHTRX406*	6	1	24	25	21	25
5	WHC060H4	BAYHTRX412*	12	2	33	35	30	30
5	WHC060H4	BAYHTRY418*	17.4	2	41	45	38	40
5	WHC060H4	BAYHTRY423*	23	2	49	50	47	50

Table 112.Unit wiring with electric heat (single point connection) - high efficiency (continued)

Tons	Unit Model Number	Heater Model Number	Heater kW Rating[a]	Control Stages	Standard Indoor Fan Motor		Oversized Indoor Fan Motor	
					MCA	Max Fuse Size or Max Circuit Breaker	MCA	Max Fuse Size or Max Circuit Breaker
6	WHC074H4	BAYHTRA409*	9	1	33	35	-	-
6	WHC074H4	BAYHTRA418*	18	1	47	50	-	-
6	WHC074H4	BAYHTRA427*	27	2	60	60	-	-
6	WHC074H4	BAYHTRA436*	36	2	74	80	-	-
7.5	WHC092H4	BAYHTRA409*	9	1	34	35	-	-
7.5	WHC092H4	BAYHTRA418*	18	1	47	50	-	-
7.5	WHC092H4	BAYHTRA427*	27	2	61	70	-	-
7.5	WHC092H4	BAYHTRA436*	36	2	74	80	-	-
8.5	WHC102H4	BAYHTRA409*	9	1	35	35	-	-
8.5	WHC102H4	BAYHTRA418*	18	1	49	50	-	-
8.5	WHC102H4	BAYHTRA427*	27	2	62	70	-	-
8.5	WHC102H4	BAYHTRA436*	36	2	76	80	-	-
10	WHC120H4	BAYHTRB418*	18	1	51	60	-	-
10	WHC120H4	BAYHTRB427*	27	2	64	70	-	-
10	WHC120H4	BAYHTRB436*	36	2	78	80	-	-
10	WHC120H4	BAYHTRB454*	54	2	89	90	-	-
575 Volts Three Phase								
3	WHC036HW	BAYHTREW12*	12	2	24	25	-	-
3	WHC036HW	BAYHTRYW17*	17.4	2	30	30	-	-
4	WHC048HW	BAYHTRXW06*	6	1	18	20	-	-
4	WHC048HW	BAYHTRXW12*	12	2	25	25	-	-
4	WHC048HW	BAYHTRYW18*	17.4	2	31	35	-	-
5	WHC060HW	BAYHTRXW06*	6	1	19	20	-	-
5	WHC060HW	BAYHTRXW12*	12	2	26	30	-	-
5	WHC060HW	BAYHTRYW18*	17.4	2	32	35	-	-
5	WHC060HW	BAYHTRYW23*	23	2	39	40	-	-
6	WHC074HW	BAYHTRAW18*	18	1	42	45	-	-
6	WHC074HW	BAYHTRAW27*	27	2	52	60		
6	WHC074HW	BAYHTRAW36*	36	2	63	70	-	-
7.5	WHC092HW	BAYHTRAW18*	18	1	43	45	-	-
7.5	WHC092HW	BAYHTRAW27*	27	2	54	60		
7.5	WHC092HW	BAYHTRAW36*	36	2	64	70	-	-
8.5	WHC102HW	BAYHTRAW18*	18	1	44	45	-	-
8.5	WHC102HW	BAYHTRAW27*	27	2	54	60		
8.5	WHC102HW	BAYHTRAW36*	36	2	65	70	-	-
10	WHC120HW	BAYHTRBW18*	18	1	45	45	-	-
10	WHC120HW	BAYHTRBW36*	36	2	66	70	-	-
10	WHC120HW	BAYHTRBW54*	54	2	74	80	-	-

(a) The standard motor for all models is a multispeed, direct drive motor.

Table 113.Electrical characteristics - compressor motor and condenser motor - 60 cycle - standard efficiency

Tons	Unit Model Number	No.	Compressor Motors						Condenser Fan Motors					
							Amps[b]						Amps[b]	
			Volts	Phase	hp[a]	rpm	RLA	LRA	No.	Volts	Phase	hp	FLA	LRA
3	WSC036H3	1	208-230	3	3.2	3500	15	88	1	208-230	3	0.25	1.1	3.6
3	WSC036H4	1	460	3	3.2	3500	6.6	44	1	460	3	0.25	0.55	1.8
3	WSC036HW	1	575	3	3.2	3500	5.5	34	1	575	3	0.25	0.45	1.4
4	WSC048H3	1	208-230	3	3.8	3500	14.5	98	1	208-230	3	0.33	1.4	4.6
4	WSC048H4	1	460	3	3.8	3500	6.3	55	1	460	3	0.33	0.7	2.3
4	WSC048HW	1	575	3	3.8	3500	6	41	1	575	3	0.33	0.55	1.8
5	WSC060H3	1	208-230	3	4.7	3500	17.5	110	1	208-230	3	0.40	1.5	5.6
5	WSC060H4	1	460	3	4.7	3500	7.88	52	1	460	3	0.40	1.8	2.8
5	WSC060HW	1	575	3	4.7	3500	6.3	39	1	575	3	0.40	0.65	2.3
7.5	WSC092H3	1	208-230	3	8.6	3500	26.09	164	1	208-230	3	0.7	3.3	12.3
7.5	WSC092H4	1	460	3	8.6	3500	11.67	94	1	460	3	0.7	1.6	6.1
7.5	WSC092HW	1	575	3	8.6	3500	8.72	65	1	575	3	0.7	1.4	5.1
8.5	WSC102H3	1	208-230	3	9.2	3500	27.63	223	1	208-230	3	0.7	3.3	12.3
8.5	WSC102H4	1	460	3	9.2	3500	12.12	100	1	460	3	0.7	1.6	6.1
8.5	WSC102HW	1	575	3	9.2	3500	9.36	70	1	575	3	0.7	1.4	5.1
10	WSC120H3	1	208-230	3	10.5	3500	34	240	1	208-230	3	0.7	3.3	12.3
10	WSC120H4	1	460	3	10.5	3500	14.42	130	1	460	3	0.7	1.6	6.1
10	WSC120HW	1	575	3	10.5	3500	10.77	84	1	460	3	0.7	1.4	5.1

(a) hp for each compressor.
(b) Amp draw for each motor; multiply value by number of motors to determine total amps.

Table 114.Electrical characteristics - compressor motor - 60 cycle - high efficiency

Tons	Unit Model Number	No.	Voltage	Phase	hp[a]	Compressor Rated		
						LRA	RLA	MCC
3	W/DHC036H3	1	208-230	3	3.9	73	11.6	18.1
3	W/DHC036H4	1	460	3	3.8	38	5.7	8.9
3	W/DHC036HW	1	575	3	3.8	25.6	4	6.2
4	W/DHC048H3	1	208-230	3	4.3	83.1	14	21.9
4	W/DHC048H4	1	460	3	4.3	41	6.4	10
4	W/DHC048HW	1	575	3	4.3	33	4.6	7.1
5	W/DHC060H3	1	208-230	3	5.3	110	16.5	25.8
5	W/DHC060H4	1	460	3	5.3	52	7.2	11.3
5	W/DHC060HW	1	575	3	5.3	38.9	5.5	8.6
6	W/DHC074H3	2	208-230	3	2.3/4.5	88/88	14.2/13.2	22.1/20.6
6	W/DHC074H4	2	460	3	2.3/4.5	44/44	6.2/6	9.7/9.3
6	W/DHC074HW	2	575	3	2.3/4.5	30/30	5.1/4.2	7.9/6.5
7.5	W/DHC092H3	2	208-230	3	5.2/5.6	83.1/98	14/14.5	21.9/22.6
7.5	W/DHC092H4	2	460	3	5.2/5.6	41/55	6.4/6.3	10/9.9

Table 114.Electrical characteristics - compressor motor - 60 cycle - high efficiency (continued)

Tons	Unit Model Number	No.	Voltage	Phase	hp[a]	Compressor Rated		
						LRA	RLA	MCC
7.5	W/DHC092HW	2	575	3	5.2/5.6	33/41	4.6/6	7.1/9.4
8.5	W/DHC102H3	2	208-230	3	6/5.6	110/98	16.22/14.5	25.3/22.6
8.5	W/DHC102H4	2	460	3	6/5.6	52/55	7.63/6.3	11.9/9.9
8.5	W/DHC102HW	2	575	3	6/5.6	38.9/41	5.32/6	8.3/9.4
10	W/DHC120H3	2	208-230	3	7.5/6.5	136/110	17.56/16	27.4/24.9
10	W/DHC120H4	2	460	3	7.5/6.5	66.1/52	8.46/7.8	13.20/12.1
10	W/DHC120HW	2	575	3	7.5/6.5	55.3/38.9	6.35/5.7	9.9/8.9

(a) hp for each compressor.

Table 115.Electrical characteristics - condenser fan motor - 60 cycle - high efficiency

Tons	Unit Model Number	Motor Voltage	Motor Hz	Motor Phase	Condenser Rated		
					LRA	FLA	Bhp
3	W/DHC036H3	208-230	60	3	3.6	1.1	0.25
3	W/DHC036H4	460	60	3	1.8	0.55	0.25
3	W/DHC036HW	575	60	3	1.4	0.45	0.25
4	W/DHC048H3	208-230	60	3	5.6	1.5	0.4
4	W/DHC048H4	460	60	3	2.8	0.8	0.4
4	W/DHC048HW	575	60	3	2.3	0.65	0.4
5	W/DHC060H3	208-230	60	3	5.6	1.5	0.4
5	W/DHC060H4	460	60	3	2.8	0.8	0.4
5	W/DHC060HW	575	60	3	2.3	0.65	0.4
6	W/DHC074H3	208-230	60	3	12.3	3.3	0.7
6	W/DHC074H4	460	60	3	6.1	1.6	0.7
6	W/DHC074HW	575	60	3	5.1	1.4	0.7
7.5	W/DHC092H3	208-230	60	3	12.3	3.3	0.7
7.5	W/DHC092H4	460	60	3	6.1	1.6	0.7
7.5	W/DHC092HW	575	60	3	5.1	1.4	0.7
8.5	W/DHC102H3	208-230	60	3	12.3	3.3	0.7
8.5	W/DHC102H4	460	60	3	6.1	1.6	0.7
8.5	W/DHC102HW	575	60	3	5.1	1.4	0.7
10	W/DHC120H3	208-230	60	3	10.4	2.8	0.75
10	W/DHC120H4	460	60	3	5.2	1.4	0.75
10	W/DHC120HW	575	60	3	5.2	1.4	0.75

Note: Precedent™ unit nameplate FLA and catalog FLA may be different than actual condenser motor nameplate FLA for two reasons:
If multiple vendors for approved motor size are used, the highest FLA is used.
Actual condenser motor FLA may be determined through unit temperature and pressure testing.

Table 116.Electrical characteristics - standard evaporator fan motor - 60 cycle - direct or belt drive standard efficiency

Tons	Unit Model Number	Direct or Belt Drive	No.	Volts	Phase	hp	Amps	
							FLA	LRA
3	WSC036H3	Direct Drive	1	208-230	1	0.75	5.7	-
3	WSC036H4	Direct Drive	1	460	1	0.75	1.7	-
3	WSC036HW	Direct Drive	1	575	1	0.75	5.7	-
4	WSC048H3	Direct Drive	1	208-230	1	1.0	6.9	-
4	WSC048H4	Direct Drive	1	460	1	1.0	2.5	-
4	WSC048HW	Direct Drive	1	575	1	1.0	6.9	-
5	WSC060H3	Direct Drive	1	208-230	1	1.0	7.6	-
5	WSC060H4	Direct Drive	1	460	1	1.0	4.0	-
5	WSC060HW	Direct Drive	1	575	1	1.0	7.6	-
7.5	WSC092H3	Belt Drive	1	208-230	3	1	3.3	12.5
7.5	WSC092H4	Belt Drive	1	460	3	1	1.6	12.5
7.5	WSC092HW	Belt Drive	1	575	3	1	1.4	10
7.5	WSC092H3	Direct Drive	1	208-230	3	2.75	7.3	-
7.5	WSC092H4	Direct Drive	1	460	3	2.75	3.6	-
7.5	WSC092HW	Direct Drive	1	575	3	2.75	7.5	-
8.5	WSC102H3	Belt Drive	1	208-230	3	1	6.3	12.5
8.5	WSC102H4	Belt Drive	1	460	3	1	3.1	12.5
8.5	WSC102HW	Belt Drive	1	575	3	1	2.5	10
8.5	WSC102H3	Direct Drive	1	208-230	3	2.75	7.3	-
8.5	WSC102H4	Direct Drive	1	460	3	2.75	3.6	-
8.5	WSC102HW	Direct Drive	1	575	3	2.75	7.5	-
10	WSC120H3	Direct Drive	1	208-230	3	2.75	7.3	-
10	WSC120H4	Direct Drive	1	460	3	2.75	3.6	-
10	WSC120HW	Direct Drive	1	460	3	2.75	7.5	-

Note: WSC(036,048,060)HW utilize 230V evaporator motors.

Table 117.Electrical characteristics - standard evaporator fan motor - 60 cycle - high efficiency

Tons	Unit Model Number	Motor Voltage	Motor Hz	Phase	No.	Motor Rating		
						FLA	LRA	HP
3	W/DHC036H3	208-230	60	1	1	7.3	—	0.75
3	W/DHC036H4	460[a]	60	1	1	4.3	—	0.75
3	W/DHC036HW	575[b]	60	1	1	3.5	—	0.75
4	W/DHC048H3	208-230	60	1	1	9.4	—	1.00
4	W/DHC048H4	460[a]	60	1	1	4.3	—	1.00
4	W/DHC048HW	575[b]	60	1	1	3.5	—	1.00
5	W/DHC060H3	208-230	60	1	1	9.4	—	1.00
5	W/DHC060H4	460[a]	60	1	1	4.3	—	1.00
5	W/DHC060HW	575[b]	60	1	1	3.5	—	1.00
6	W/DHC074H3	208-230	60	1	1	7.3	-	2.75

Table 117.Electrical characteristics - standard evaporator fan motor - 60 cycle - high efficiency (continued)

Tons	Unit Model Number	Motor Voltage	Motor Hz	Phase	No.	Motor Rating		
						FLA	LRA	HP
6	W/DHC074H4	460	60	1	1	3.6	-	2.75
6	W/DHC074HW	575[c]	60	1	1	7.5	-	2.75
7.5	W/DHC092H3	208-230	60	1	1	7.3	-	2.75
7.5	W/DHC092H4	460	60	1	1	3.6	-	2.75
7.5	W/DHC092HW	575[c]	60	1	1	7.5	-	2.75
8.5	W/DHC102H3	208-230	60	1	1	7.3	-	2.75
8.5	W/DHC102H4	460	60	1	1	3.6	-	2.75
8.5	W/DHC102HW	575[c]	60	1	1	7.5	-	2.75
10	W/DHC120H3	208-230	60	1	1	7.3	-	2.75
10	W/DHC120H4	460	60	1	1	3.6	-	2.75
10	W/DHC120HW	575[c]	60	1	1	7.5	-	2.75

Note: Precedent™ unit nameplate FLA and catalog FLA may be different than actual evaporator motor nameplate FLA for two reasons:
If multiple vendors for approved motor size are used, the highest FLA is used.
Actual evaporator motor FLA may be determined through unit temperature and pressure testing.

(a) Precedent 460V rated units utilize a high efficiency 230V evaporator fan motor powered through 480/240V transformer. Fan voltage/FLA rated at transformer input.
(b) Precedent 575V rated units utilize a high efficiency 230V evaporator fan motor powered through 575/240V transformer. Fan voltage/FLA rated at transformer input.
(c) Precedent 575V rated units utilize a high efficiency 460V evaporator fan motor powered through 575/460V transformer. Fan voltage/FLA rated at transformer input.

Table 118.Electrical characteristics - oversized evaporator fan motor - 60 cycle - belt drive - standard efficiency

Tons	Unit Model Number	Direct or Belt Drive	No.	Volts	Phase	hp	Amps	
							FLA	LRA
3	WSC036H3	Direct Drive	1	208-230	1	1.5	8.2	-
3	WSC036H4	Direct Drive	1	460	1	1.5	4.2	-
3	WSC036HW	Direct Drive	1	575	1	1.5	3.5	-
4	WSC048H3	Direct Drive	1	208-230	1	1.5	8.2	-
4	WSC048H4	Direct Drive	1	460	1	1.5	4.2	-
4	WSC048HW	Direct Drive	1	575	1	1.5	3.5	-
5	WSC060H3	Direct Drive	1	208-230	1	1.5	8.2	-
5	WSC060H4	Direct Drive	1	460	1	1.5	4.2	-
5	WSC060HW	Direct Drive	1	575	1	1.5	3.5	-
7.5	WSC092H3	Belt Drive	1	208-230	3	3	9.4	52.4
7.5	WSC092H4	Belt Drive	1	460	3	3	4.6	26.3
7.5	WSC092HW	Belt Drive	1	575	3	3	3.4	29.4
8.5	WSC102H3	Belt Drive	1	208-230	3	3	9.4	52.4
8.5	WSC102H4	Belt Drive	1	460	3	3	4.6	26.3
8.5	WSC102HW	Belt Drive	1	575	3	3	3.4	29.4

Note: WSC(036,048,060)HW utilize 230V evaporator motors.

Table 119.Electrical characteristics - oversized evaporator fan motor - 60 cycle - high efficiency

Tons	Unit Model Number	Motor Voltage	Motor Hz	Phase	No.	Motor Rating		
						FLA	LRA	HP
3	W/DHC036H3	208-230	60	3	1	4.3	—	1.50
3	W/DHC036H4	460	60	3	1	1.9	—	1.50
4	W/DHC048H3	208-230	60	3	1	4.3	—	1.50
4	W/DHC048H4	460	60	3	1	1.9	—	1.50
5	W/DHC060H3	208-230	60	3	1	4.3	—	1.50
5	W/DHC060H4	460	60	3	1	1.9	—	1.50

Notes:
1. Precedent oversized evaporator available only on 230V and 460V.
2. Precedent™ unit nameplate FLA and catalog FLA may be different than actual evaporator motor nameplate FLA for two reasons:
   If multiple vendors for approved motor size are used, the highest FLA is used.
   Actual evaporator motor FLA may be determined through unit temperature and pressure testing.

Table 120.Electrical characteristics - inducer motor

Unit Model Number	Stages	hp	rpm	volts	phase	LRA
DHC(036-120)H(3,4,W)*(L,X,M,Y,H,Z)	2	1/50	3200/3500	208-230	1	0.68
DHC074**(L,M,X,Y) DHC(092-102)**(L,X)	1	1/35	3000	208-230	1	0.6
DHC074**(H,Z) DHC(092-102)**(M,H,Y,Z) DHC120	2	1/15	3000/3350	208-230	1	0.4

Jobsite Connections

Table 121.Typical Number of Wires

Zone Sensors		
A	Manual Changeover.....	4
	Manual/Auto Changeover.....	5
	Manual/Auto Changeover with Status Indication LED's.....	10
	Programmable Night Setback with Status Indication LED's.....	7
Thermostats		
A	3 Wires, 24V, Cooling only	
	4 Wires, 24V, with Electric Heat	
B	3 Power Wires + 1 Ground Wire (3-phase)	
	2 Power Wires + 1 Ground Wire (1-phase)	

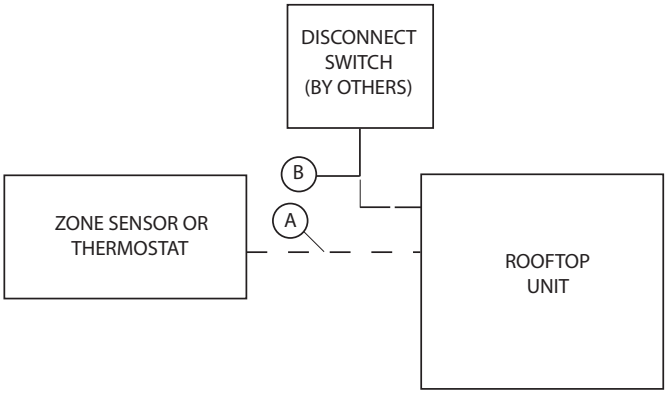

For specific wiring information, see the installation instructions.
All wiring except power wire is low voltage.
All customer supplied wiring to be copper and must conform to applicable electrical codes (such as NEC or CEC) and local electric codes. Wiring shown dotted is to be furnished and installed by the customer.

Dimensional Data

Figure 4. Heat pump - 3 to 4 tons standard efficiency, 3 ton high efficiency

Note: 2” electrical connection: single point power when heat installed (W*C)

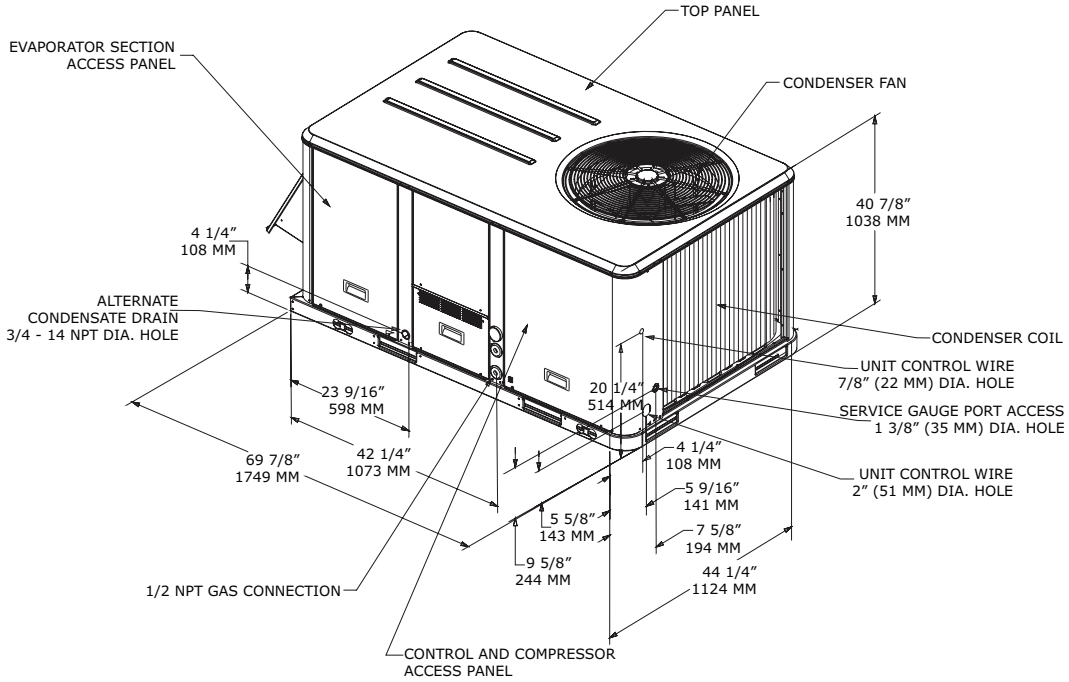

Figure 5. Heat pump - 3 to 4 tons standard efficiency, 3 ton high efficiency - downflow airflow supply/return - through-the-base utilities

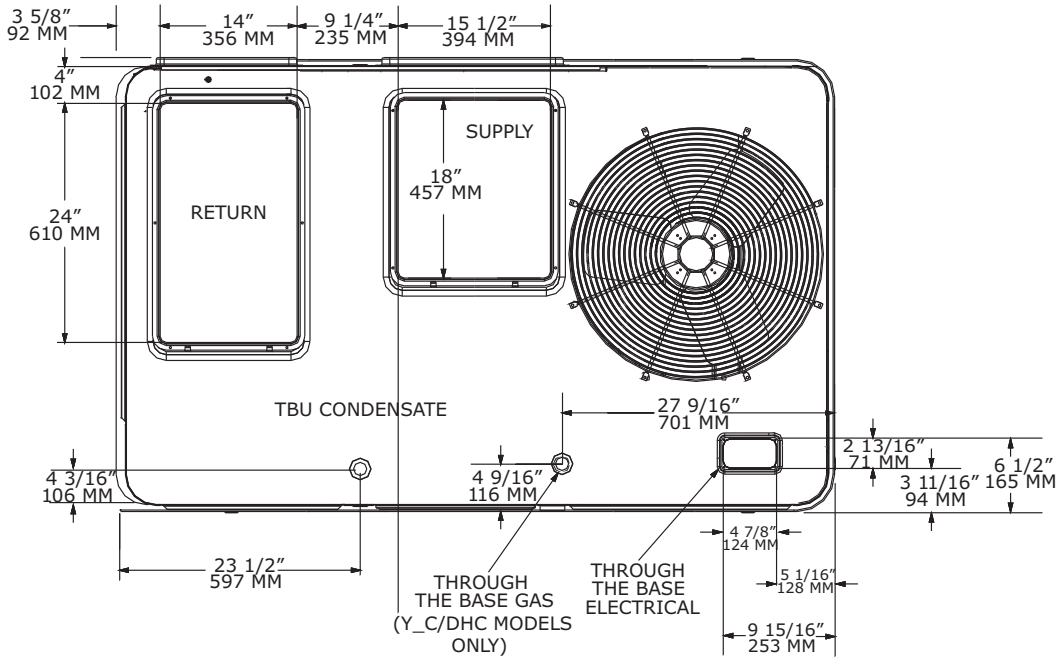

Figure 6. Heat pump - 3 to 4 tons standard efficiency, 3 ton high efficiency - horizontal airflow supply/return

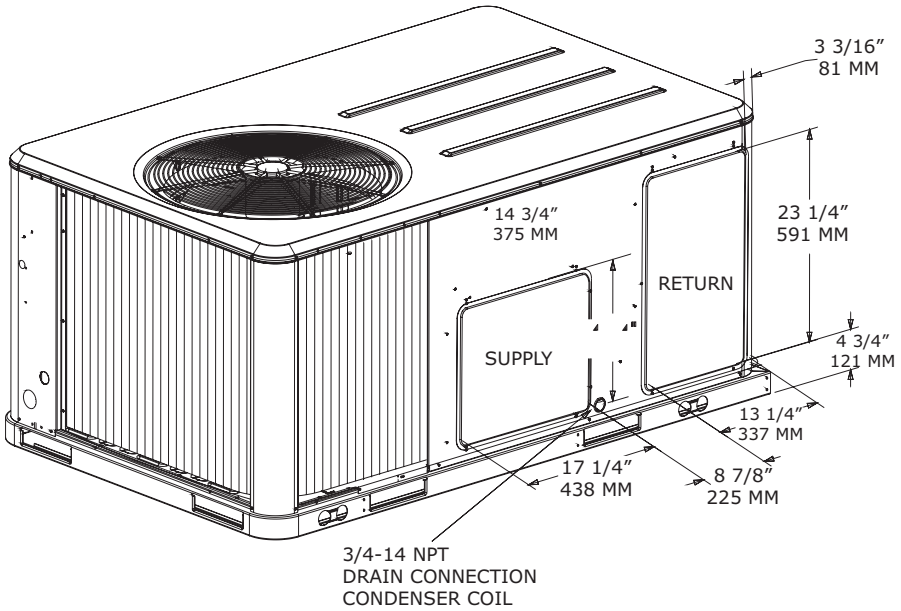

Figure 7. Heat pump - 3 to 4 tons standard efficiency, 3 ton high efficiency - unit clearance and roof opening

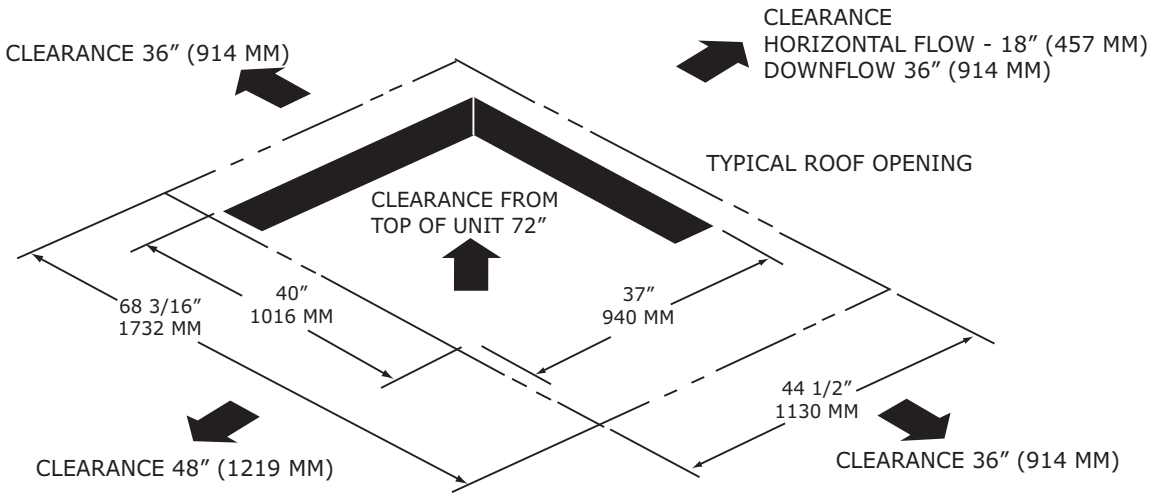

Figure 8. Heat pump - 3 to 4 tons standard efficiency, 3 ton high efficiency - roof curb

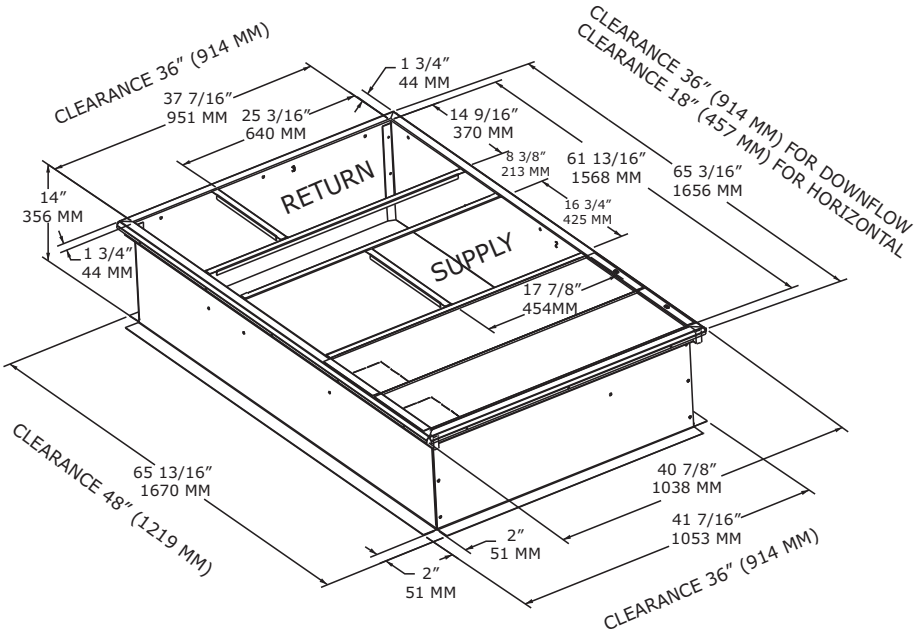

Figure 9. Heat pump - 3 to 4 tons standard efficiency, 3 ton high efficiency - downflow duct connections - field fabricated

Note: Reference tabular information for duct clearance to combustible materials in the application consideration chapter.

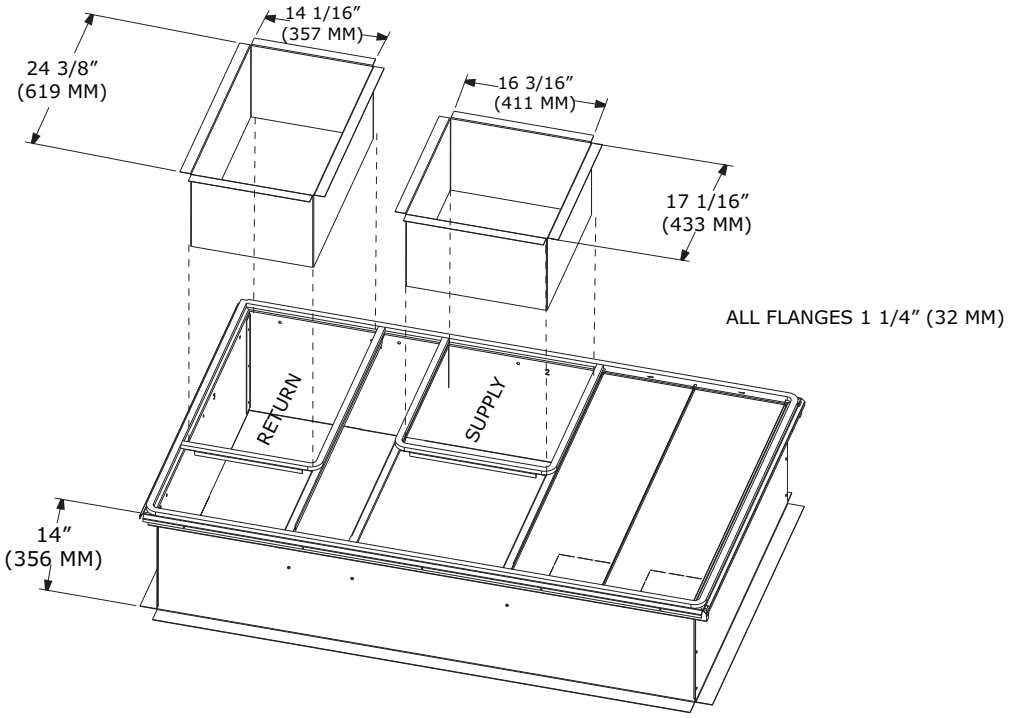

Figure 10. Heat pump - 3 to 4 tons standard efficiency, 3 ton high efficiency - economizer, manual or motorized fresh air damper; power exhaust

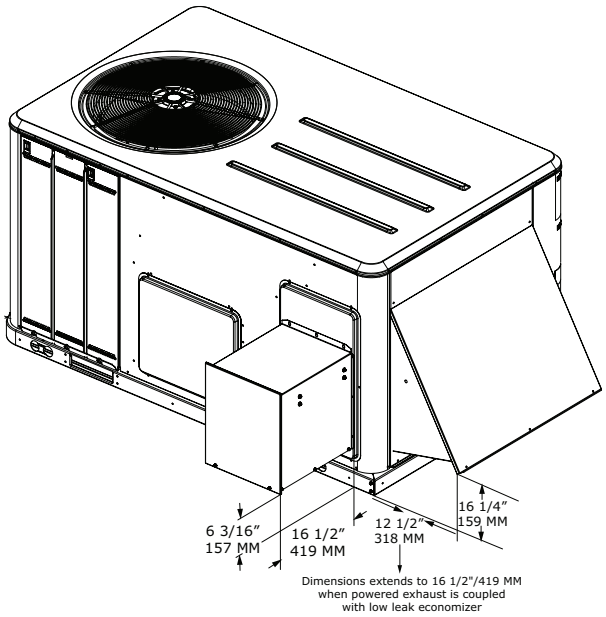

Figure 11. Heat pump 3 to 4 tons standard efficiency, 3 ton high efficiency - economizer and barometric relief damper hood

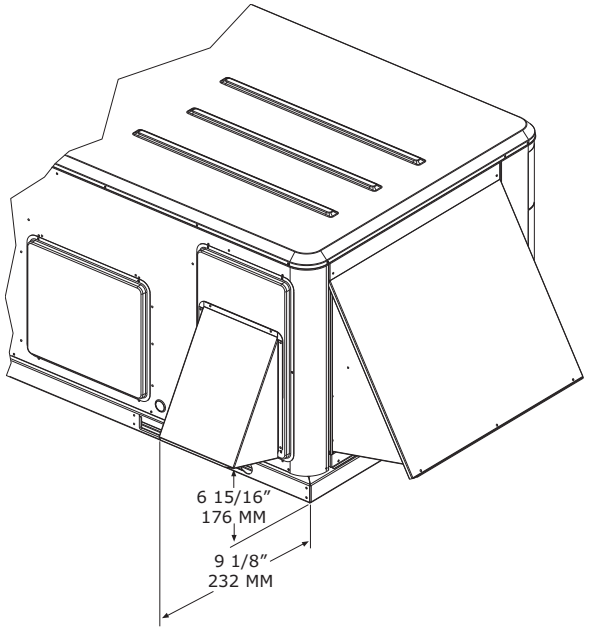

Figure 12. Heat pump - 3 to 4 tons standard efficiency, 3 ton high efficiency - swing diameter for hinged door(s) option

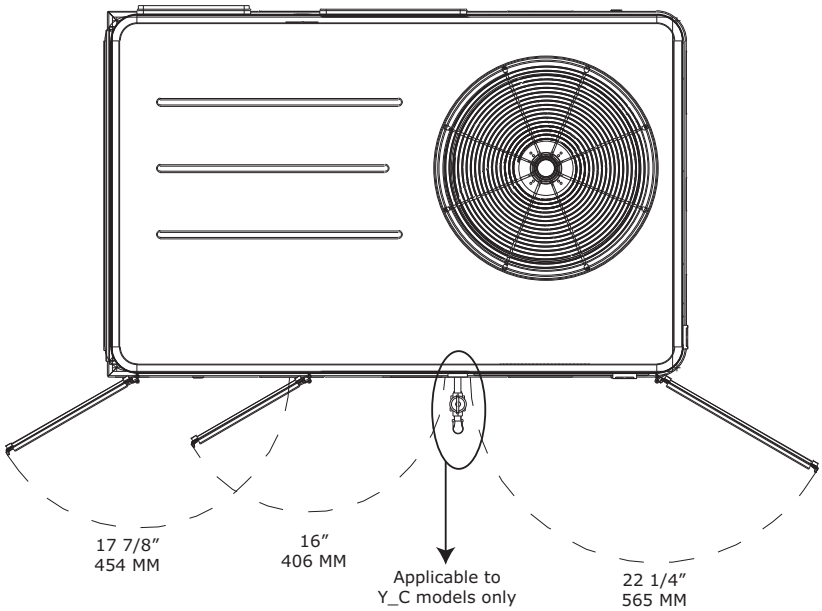

Figure 13. Heat pump - 5 tons standard efficiency, 4 to 5 tons high efficiency

Note: 2” electrical connection: single point power when heat installed (W*C)

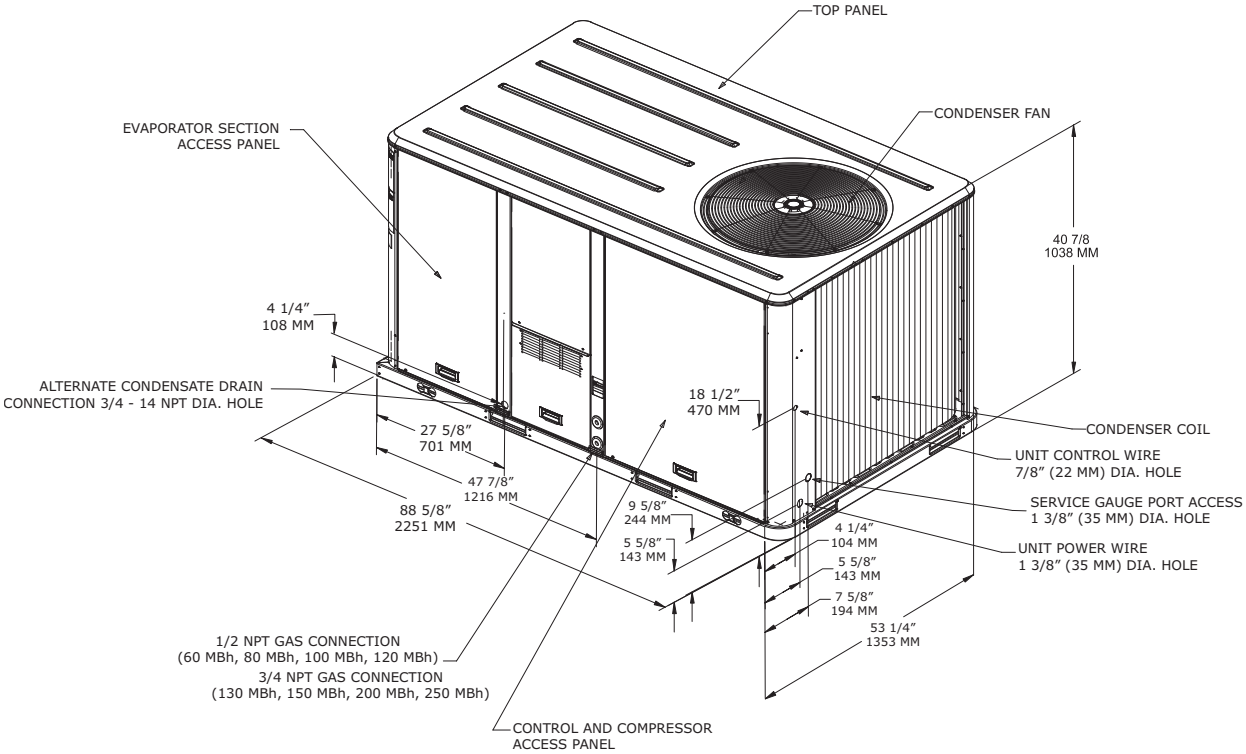

Figure 14. Heat pumps - 5 to 10 tons standard efficiency, 4 to 8.5 tons high efficiency - downflow airflow supply/return - through-the-base utilities

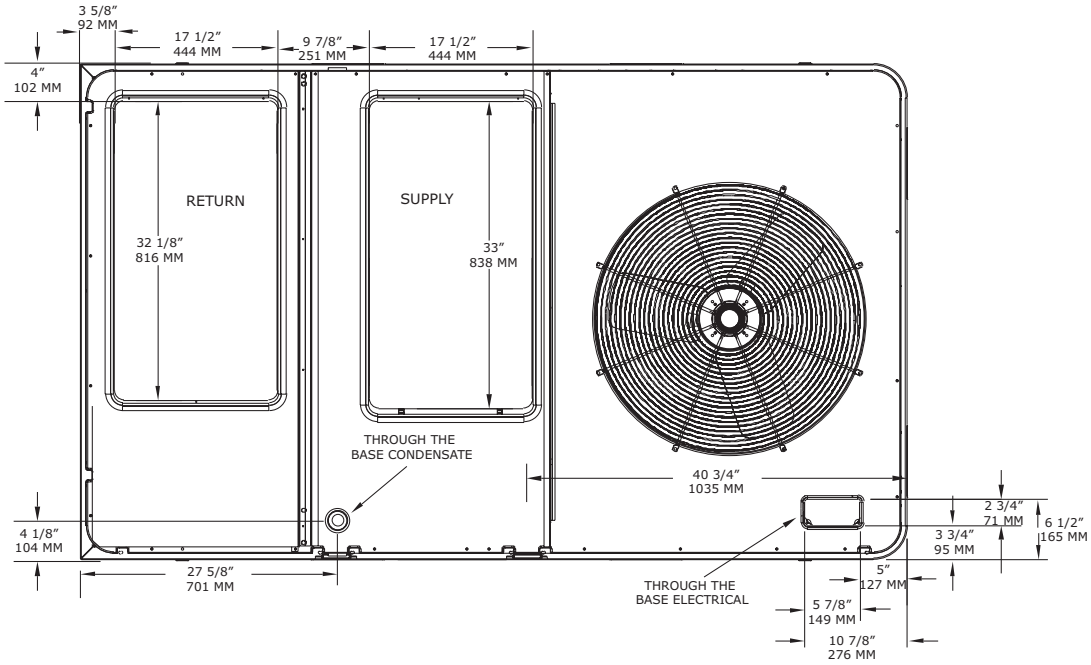

Figure 15. Heat pumps - 5 to 10 tons standard efficiency, 4 to 8.5 tons high efficiency - horizontal airflow supply and return

Note: All dimensions are in inches/millimeters.

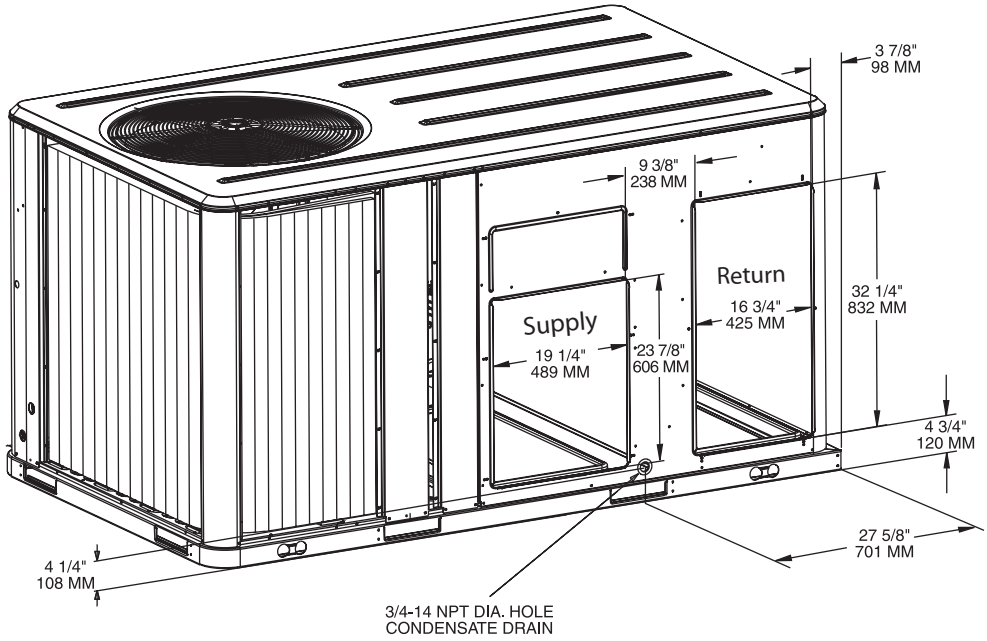

Figure 16. Heat pumps - 5 to 10 tons standard efficiency, 4 to 8.5 tons high efficiency - unit clearance and roof opening

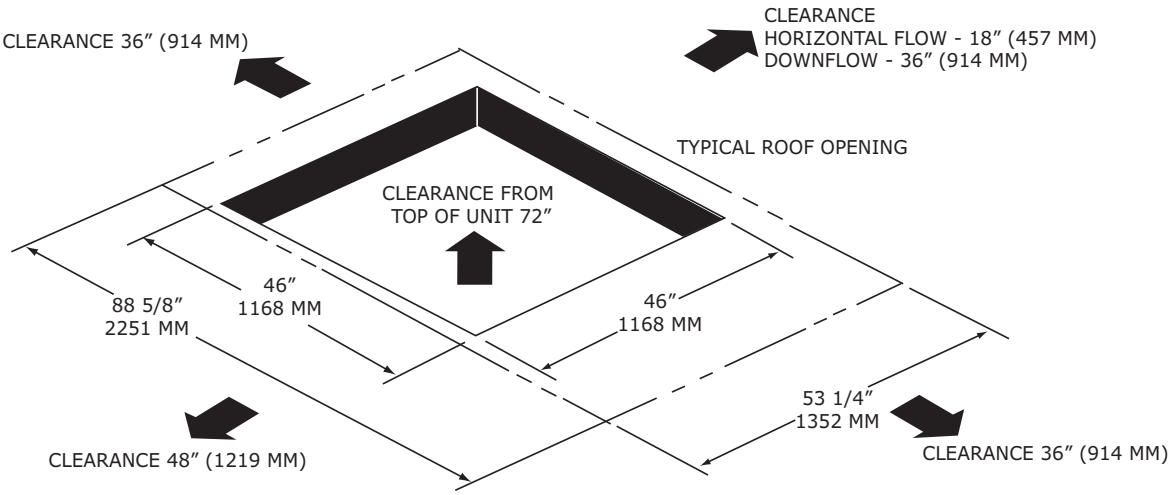

Figure 17. Heat pumps - 5 to 10 tons standard efficiency, 4 to 8.5 tons high efficiency - roof curb

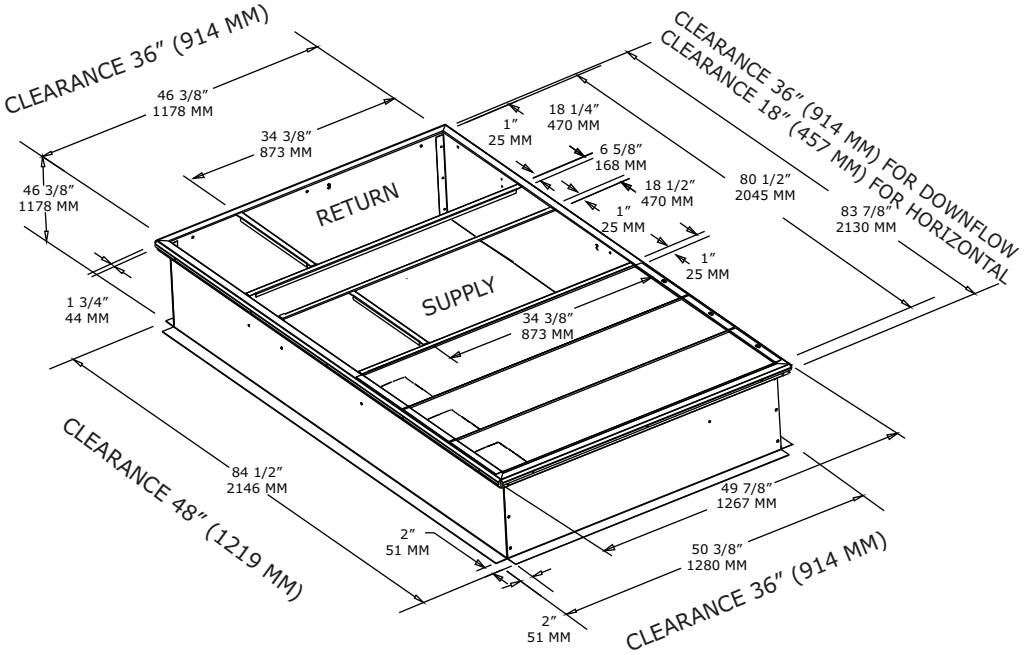

Figure 18. Heat pumps - 5 to 10 tons standard efficiency, 4 to 8.5 tons high efficiency - downflow duct connections field fabricated

Note: Reference tabular information for duct clearance to combustible materials in the application consideration chapter.

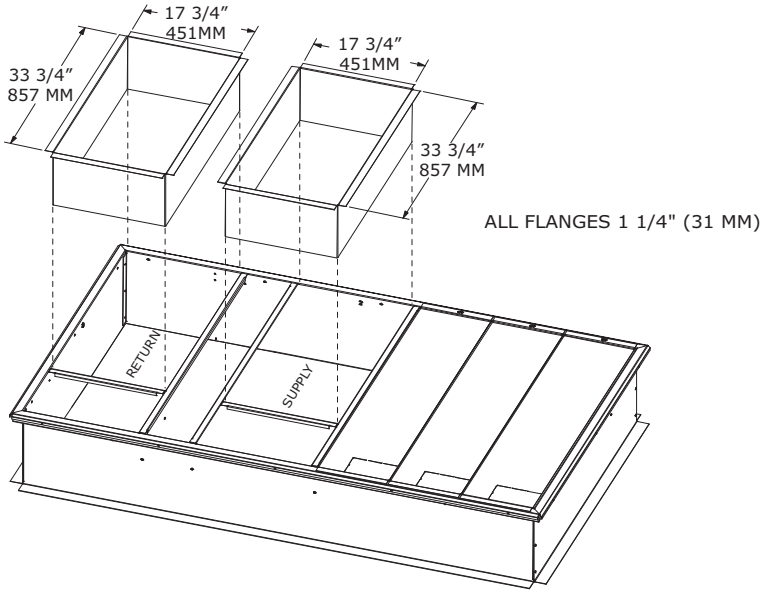

Figure 19. Heat pumps - 5 to 10 tons standard efficiency, 4 to 8.5 tons high efficiency - power exhaust

Note: Reference tabular information

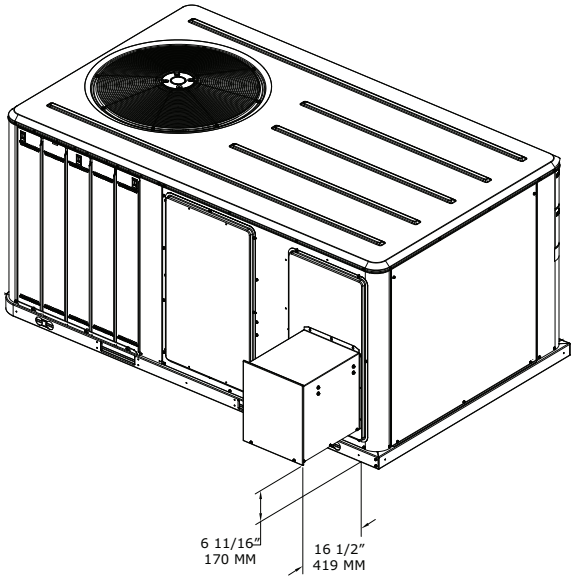

Figure 20. Heat pumps - 5 to 10 tons standard efficiency, 4 to 10 tons high efficiency - economizer, manual or motorized fresh air damper

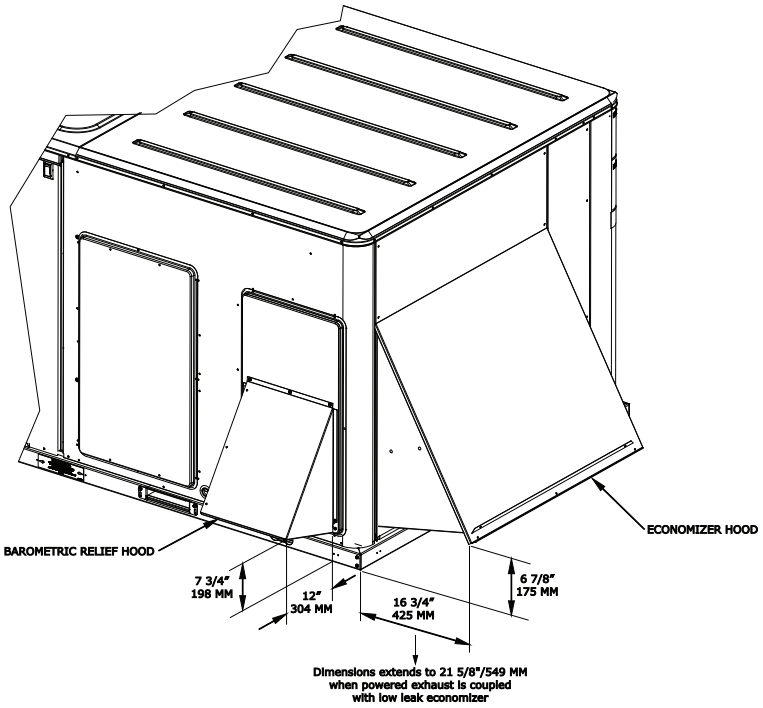

Figure 21. Heat pumps - 5 to 10 tons standard efficiency, 4 to 8.5 tons high efficiency - swing diameter for hinged door(s) option

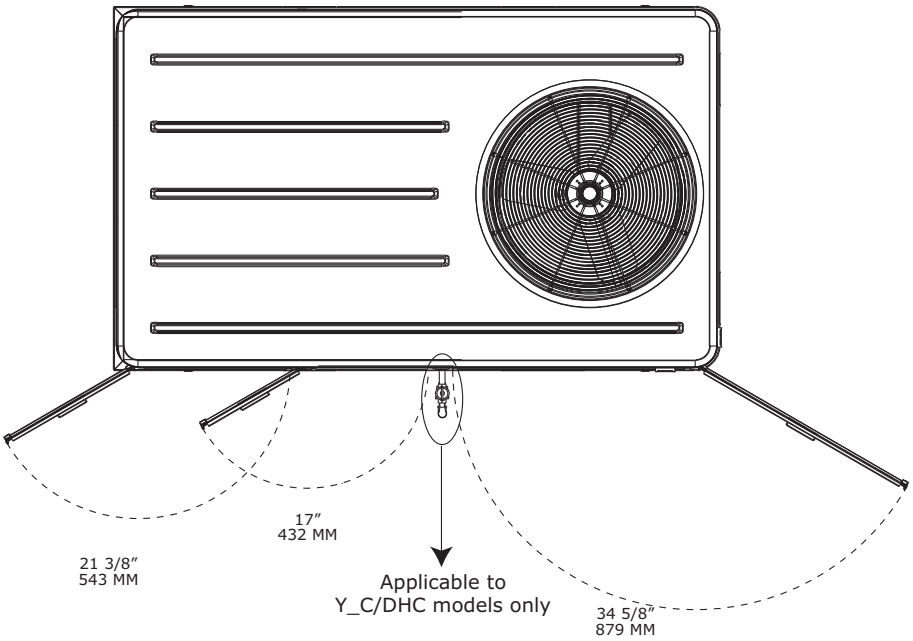

Figure 22. Heat pump - 7.5 to 10 tons standard efficiency and 7.5 to 8.5 tons high efficiency

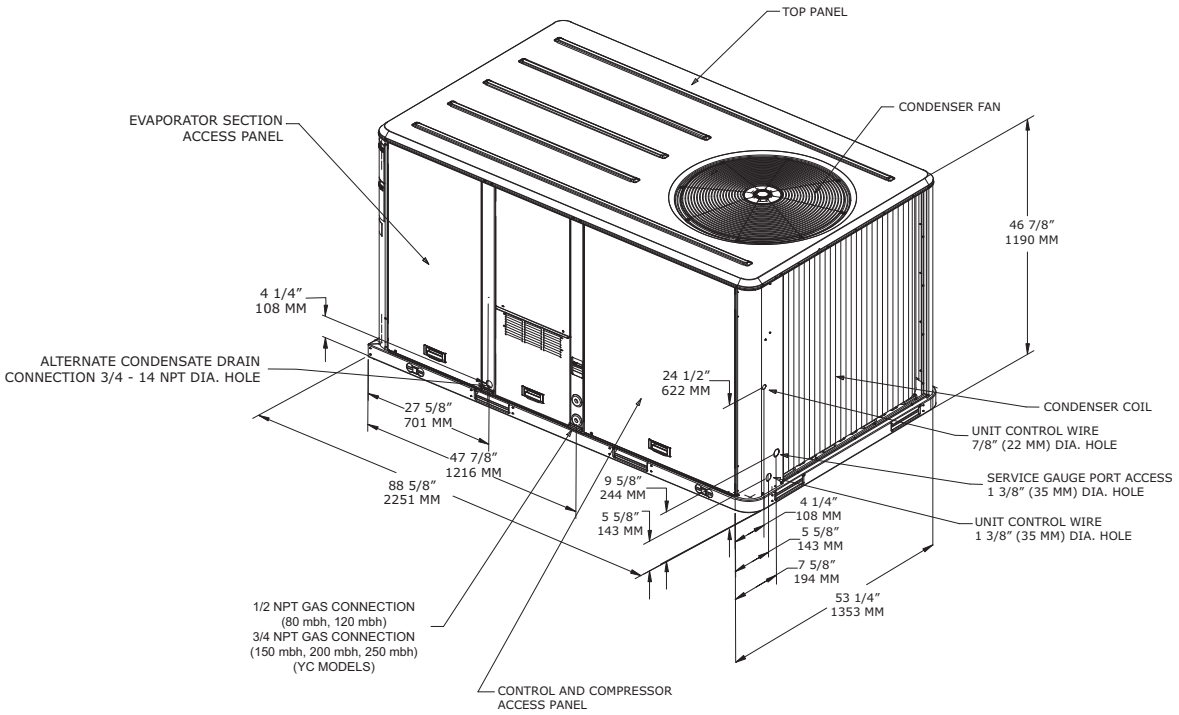

Figure 23. Heat pump - 10 tons high efficiency - downflow airflow supply/return through-the-base utilities

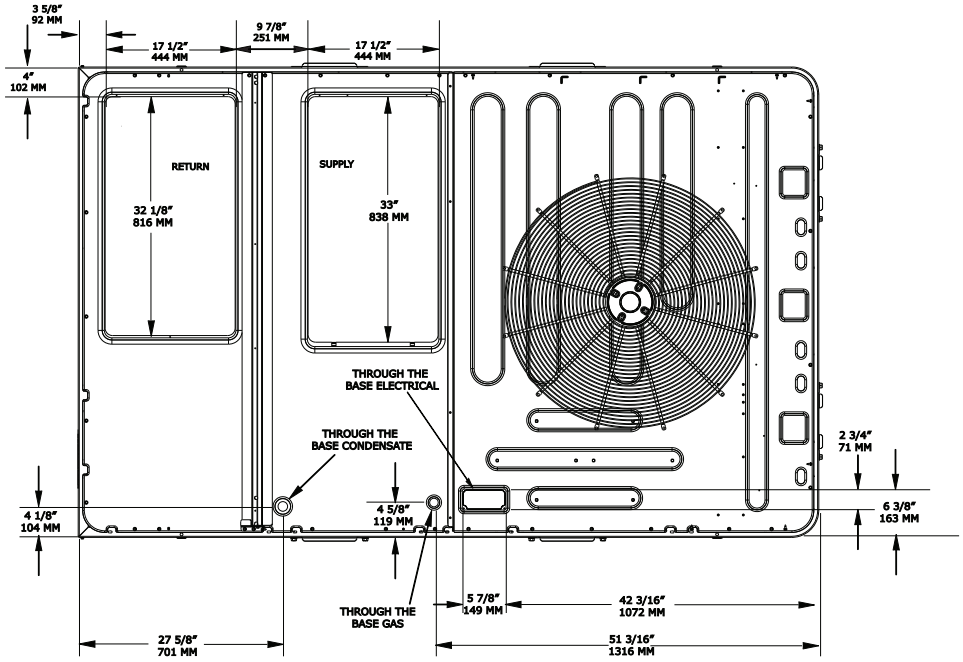

Figure 24. Heat pump - 10 tons high efficiency

Note: 2" Electrical Connection: Single Point Power When Heat Installed.

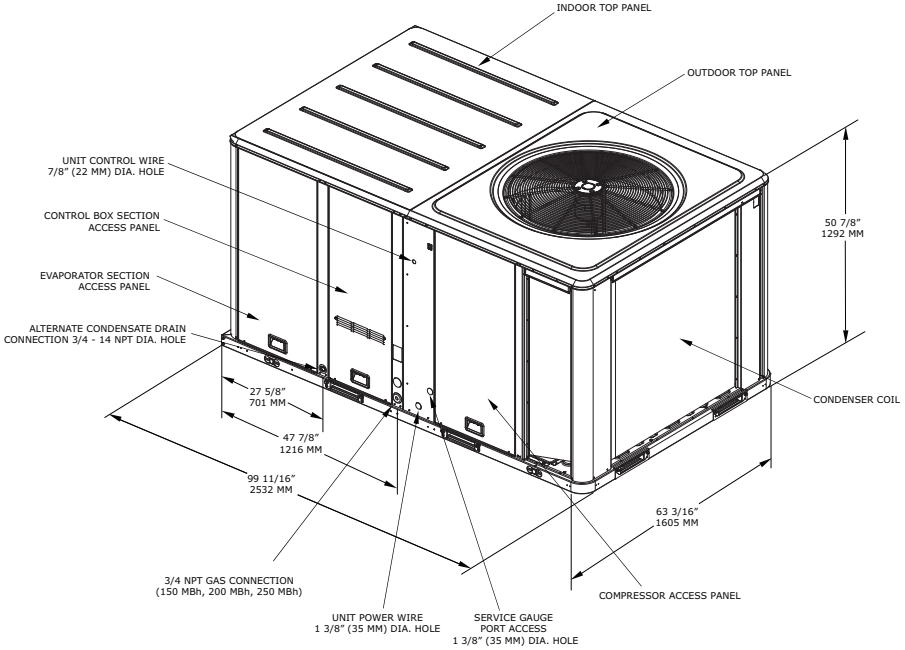

Figure 25. Heat pump - 10 tons high efficiency - unit clearance and roof opening

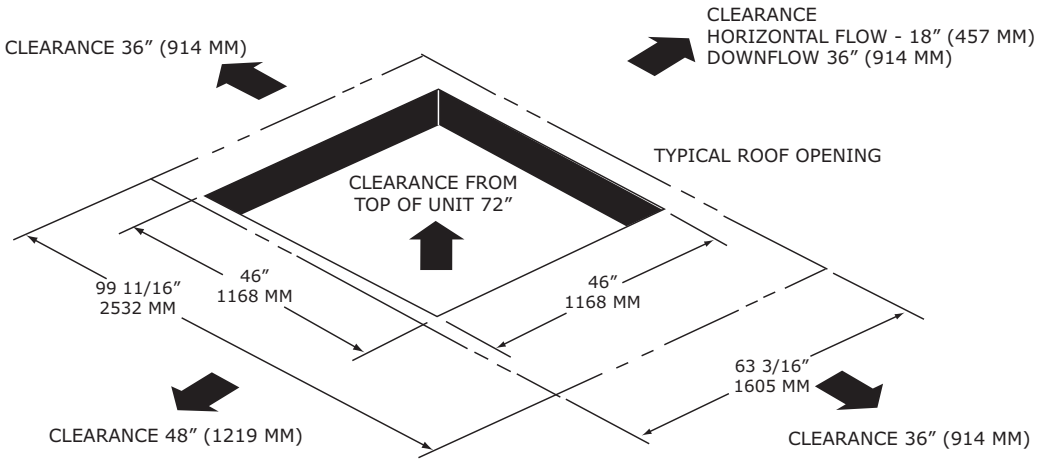

Figure 26. Heat pump - 10 tons high efficiency - roof curb

Note: 2" Electrical Connection: Single Point Power When Heat Installed.

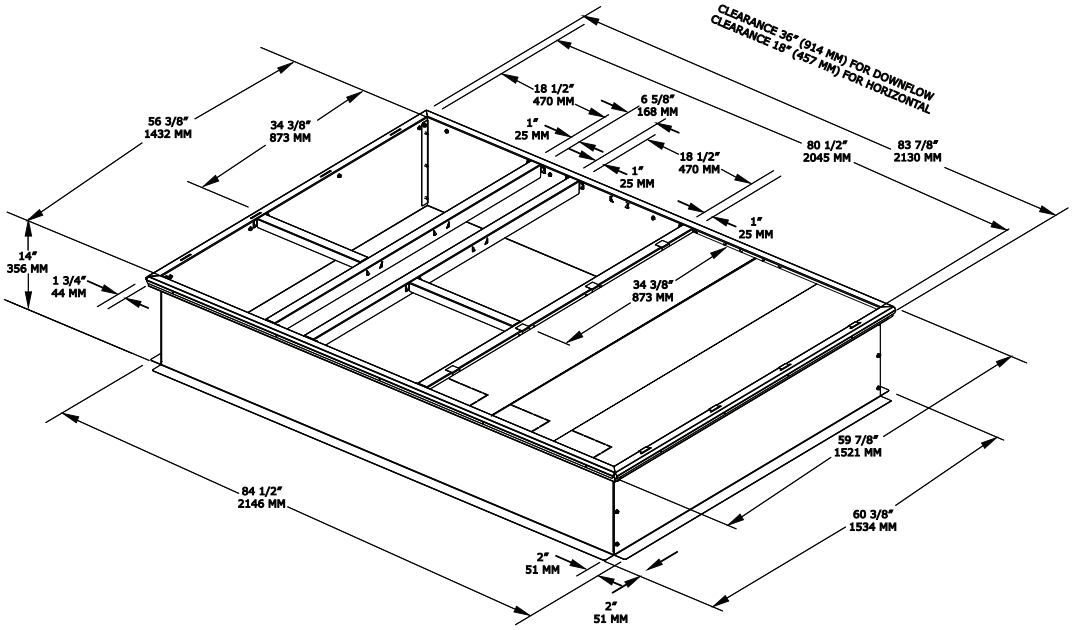

Figure 27. Heat pump - 10 tons high efficiency - horizontal airflow supply and return

Note: All dimensions are in inches/millimeters.

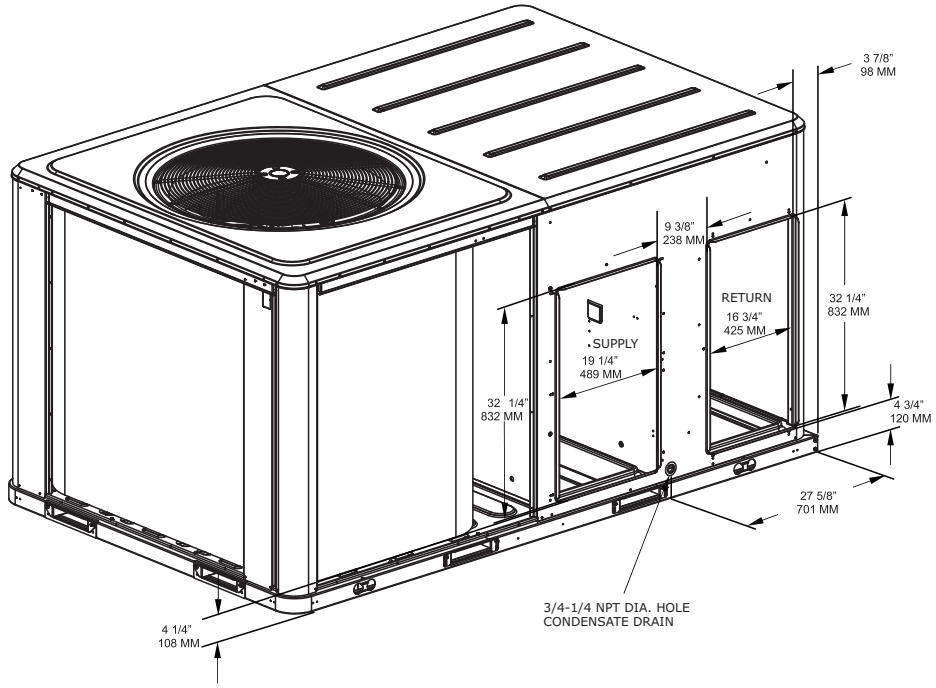

Figure 28. Heat pump - 10 tons high efficiency - downflow duct connections (field fabricated)

Note: Reference tabular information for duct clearance to combustible materials in the application consideration chapter.

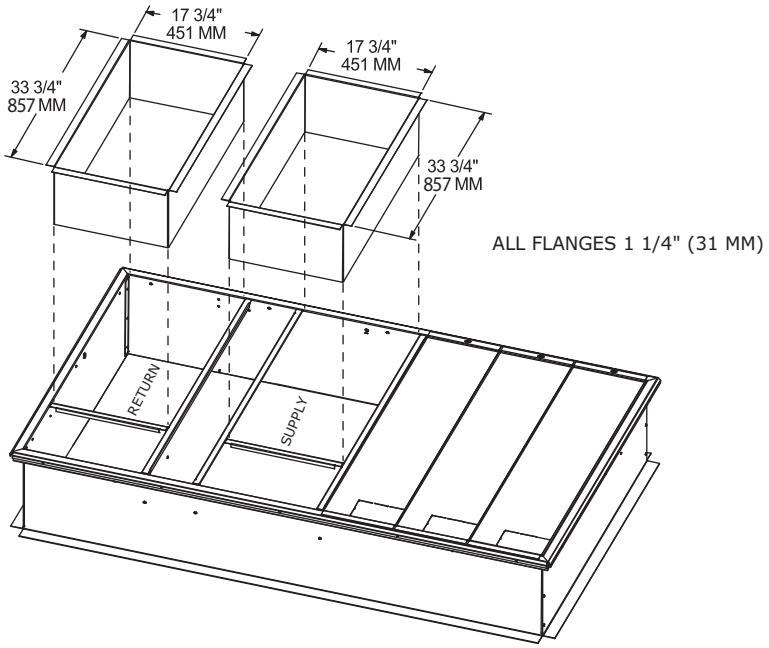

Figure 29. Heat pump - 10 tons high efficiency - power exhaust

Note: Reference tabular information

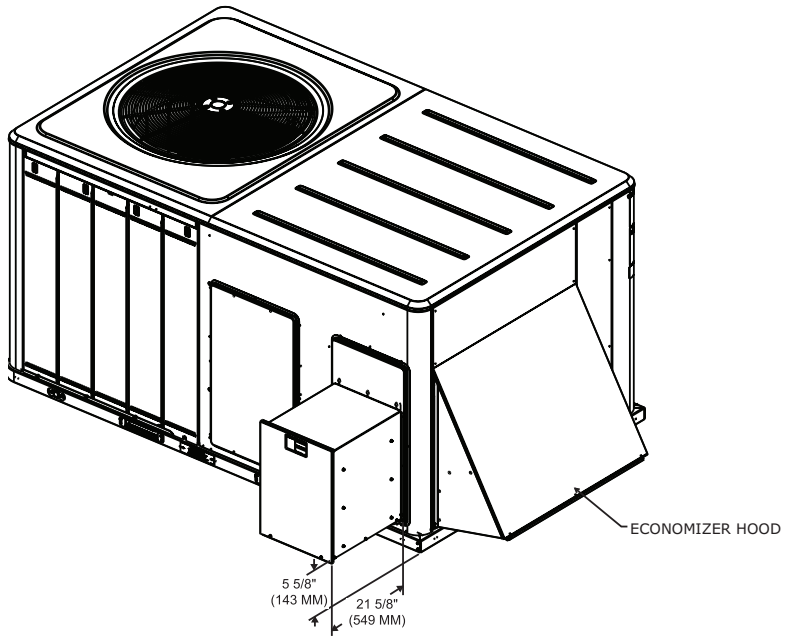

Figure 30. Heat pump - 10 tons high efficiency - swing diameter for hinged door(s) option

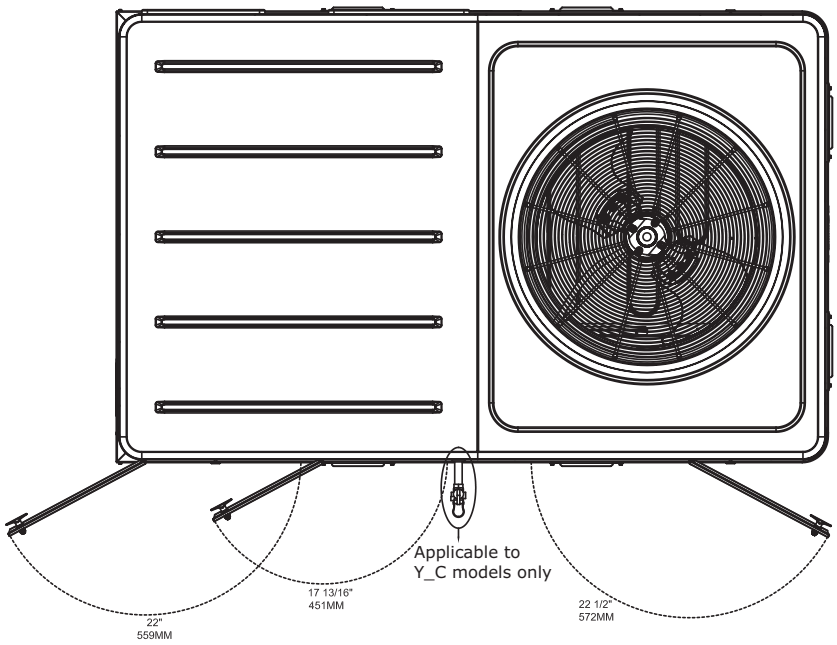

Weights

Table 122.Maximum unit and corner weights (lbs) and center of gravity dimensions (in.)

	Unit	Maximum Model Weights[a]		Corner Weights[b]				Center of Gravity (in.)	
Tons	Model No.	Shipping	Net	A	B	C	D	Length	Width
3	WSC036H	612	507	144	122	110	130	32	21
4	WSC048H	645	540	165	131	108	136	31	20
5	WSC060H	777	682	228	177	114	163	38	22
7.5	WSC092H	894	796	252	204	163	177	41	23
8.5	WSC102H	927	829	286	183	195	164	40	23
10	WSC120H	948	850	303	170	218	159	40	24
3	WHC036H	619	514	142	120	111	142	31	22
4	WHC048H	768	673	222	175	114	162	38	22
5	WHC060H	773	678	225	176	114	162	38	22
3	DHC036H	658	553	145	137	125	145	33	22
4	DHC048H	845	750	234	192	146	178	40	23
5	DHC060H	849	754	235	193	147	179	40	23
6	WHC074H	927	829	193	295	65	276	38	22
7.5	WHC092H	927	829	193	295	65	276	38	22
8.5	WHC102H	953	855	199	306	67	283	39	22
10	WHC120H	1433	1228	357	343	259	269	49	27
6	DHC074H	990	892	216	324	69	283	39	21
7.5	DHC092H	1004	906	218	330	70	288	39	21
8.5	DHC102H	1016	918	220	336	70	292	39	21
10	DHC120H	1499	1294	402	313	290	289	47	28

(a) Weights are approximate.
(b) Corner weights are given for information only.

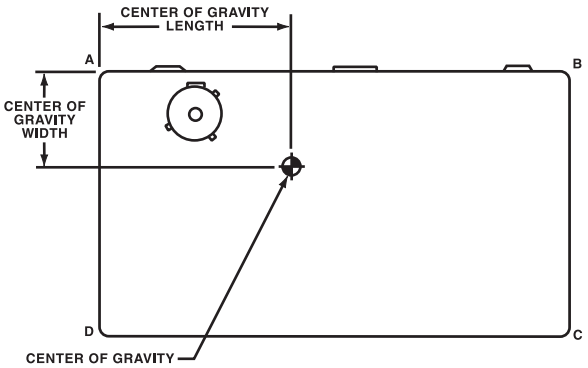

Table 123.Factory installed options (fiops)/accessory net weights (lbs)[a],[b]

Accessory	WSC036H-048H, D/WHC036H Net Weight 3 to 4 Tons	WSC060H, D/WHC048-060H Net Weight 4 to 5 Tons	WSC092H-120H W/DHC074-102H Net Weight 6 to 10 Tons	D/WHC120H Net Weight 10 Tons
460V/575V IDM Transformer[c]	29	29	—	—
Barometric Relief	7	10	10	10
Coil Guards	12	20	20	30
Economizer	26	36	36	36
Electric Heaters[d]	15	30	30/44[e]	50
Hinged Doors	10	12	12	12
Low Leak Economizer	70	91	91	91
Manual Outside Air Damper	16	26	26	26
Motorized Outside Air Damper	20	30	30	30
Oversized Motor	5	8	8	—
Powered Convenience Outlet	38	38	38	50
Powered Exhaust	40	80	80	80
Roof Curb	61	105	105	111
Smoke Detector, Supply	5	5	5	5
Smoke Detector, Return	7	7	7	7
Stainless Steel Heat Exchanger[f]	4	6	—	—
Through-the-Base Electrical	8	13	13	13
Through-the-Base Gas[f]	5	5	—	—
Traq Dampers	10	15	15	15
Unit Mounted Circuit Breaker	5	5	5	5
Unit Mounted Disconnect	5	5	5	5

(a) Weights for options not listed are <5 lbs.
(b) Net weight should be added to unit weight when ordering factory-installed accessories.
(c) Applicable to D/WHC 460/575V units.
(d) Applicable to heat pump units only (W*C).
(e) Larger weight applies to units with variable speed fan.
(f) Applicable to dual fuel units only (D*C).

Mechanical Specifications

Standard

General

Packaged rooftop units cooling, heating capacities, and efficiencies are AHRI Certified within scope of AHRI Standard 210-240 for 3 to 5 tons units or 340-360 (I-P) or 6 to 10 tons units and ANSIZ21.47 and 10 CFR Part 431 pertaining to Commercial Warm Air Furnaces (all gas heating units). The units shall be convertible airflow. The operating range shall be between 115°F and 0°F in cooling as standard from the factory for units with microprocessor controls. All units shall be factory assembled, internally wired, fully charged with R-410A, and 100 percent run tested to check cooling operation, fan and blower rotation, and control sequence before leaving the factory. Wiring internal to the unit shall be colored and numbered for simplified identification. Units shall be cULus listed and labeled, classified in accordance for Central Cooling Air Conditioners.

Casing

Unit casing shall be constructed of zinc coated, heavy gauge, galvanized steel. Exterior surfaces shall be cleaned, phosphatized, and finished with a weather-resistant baked enamel finish. Unit's surface shall be tested 500 hours in a salt spray test in compliance with ASTM B117. Cabinet construction shall allow for all maintenance on one side of the unit. Service panels shall have lifting handles and be removed and reinstalled by removing two fasteners while providing a water and air tight seal. All exposed vertical panels and top covers in the indoor air section shall be insulated with a cleanable foil-faced, fire-retardant permanent, odorless glass fiber material. The base of the unit shall be insulated with 1/8 inch, foil-faced, closed-cell insulation. All insulation edges shall be either captured or sealed. The unit's base pan shall have no penetrations within the perimeter of the curb other than the raised 1 1/8 inch high downflow supply/return openings to provide an added water integrity precaution, if the condensate drain backs up. The base of the unit shall have provisions for forklift and crane lifting, with forklift capabilities on three sides of the unit.

Compressors

All units shall have direct-drive, hermetic, scroll type compressors with centrifugal type oil pumps. Motor shall be suction gas-cooled and shall have a voltage utilization range of plus or minus 10 percent of unit nameplate voltage. Internal overloads shall be provided with the scroll compressors.

Crankcase Heaters

These band heaters provide improved compressor reliability by warming the oil to prevent migration during off-cycles or low ambient conditions.

Controls

Unit shall be completely factory-wired with necessary controls and contactor pressure lugs or terminal block for power wiring. Unit shall provide an external location for mounting a fused disconnect device.

Microprocessor controls shall be standard.

Microprocessor controls provide for all 24V control functions. The resident control algorithms shall make all heating, cooling, and/or ventilating decisions in response to electronic signals from sensors measuring indoor and outdoor temperatures. The control algorithm maintains accurate temperature control, minimizes drift from set point, and provides better building comfort. A centralized microprocessor shall provide anti-short cycle timing and time delay between compressors to provide a higher level of machine protection.

Units shall have single point power entry as standard.

Evaporator and Condenser Coils

Internally finned, 5/16-inch copper tubes mechanically bonded to a configured aluminum plate fin shall be standard. Coils shall be leak tested at the factory to ensure the pressure integrity. The evaporator coil and condenser coil shall be leak tested to 600 psig. The assembled unit shall be leak tested to 465 psig. The condenser coil shall have a patent pending 1+1+1 hybrid coil designed with slight gaps for ease of cleaning. A plastic, dual-sloped, removable and reversible condensate drain pan with through-the-base condensate drain is standard.

Filters

Throwaway filters shall be standard on all units. Optional 2-inch MERV 8 and MERV 13 filters shall also be available.

High Pressure Control

All units include High Pressure Cutout as standard.

Indoor Fan

Standard efficiency 6 to 8.5 tons units come standard with belt drive motors with an adjustable idler-arm assembly for quick-adjustment to fan belts and motor sheaves. All high efficiency and 10 tons standard efficiency shall have variable speed direct drive motors. All motors shall be thermally protected. All indoor fan motors meet the U.S. Energy Policy Act of 1992 (EPACT).

Outdoor Fans

The outdoor fan shall be direct-drive, statically balanced, draw-through in the vertical discharge position. The fan motor shall be permanently lubricated and shall have built-in thermal overload protection.

Phase Monitoring Protection

Precedent™ units with 3-phase power are equipped with phase monitoring protection as standard. These devices protect motors and compressors against problems caused by phase loss, phase imbalance and phase reversal indication.

Plenum Fan

Select 6 to 10 tons models are equipped with a direct drive plenum fan design. Plenum fan design shall include a backward-curved fan wheel along with an external rotor direct drive variable speed indoor motor. All plenum fan designs will have a variable speed adjustment potentiometer located in the control box.

Refrigerant Circuits

Each refrigerant circuit offer thermal expansion valve as standard. Service pressure ports, and refrigerant line filter driers are factory-installed as standard. An area shall be provided for replacement suction line driers.

Unit Top

The top cover shall be one piece construction or where seams exist, it shall be double-hemmed and gasket-sealed. The ribbed top adds extra strength and prevents water from pooling on unit top.

Factory Installed Options

Black Epoxy Pre-Coated Coils

The black epoxy coils have a thermoset vinyl coating that is bonded to the aluminum fin stock prior to the fin-stamping process. The pre-coated coils are an economical option for protection in mildly corrosive environments.

CO_2 Sensor Wiring

Factory-installed CO_2 sensor wiring saves time and ensures proper unit connections for the field installed CO_2 sensor kits.

Condensate Overflow Switch

This option shall shut the unit down in the event that a clogged condensate drain line prevents proper condensate removal from the unit.

Fault Detection and Diagnostics (FDD)

This offering meets the mandatory requirement of CA Title 24 of fully configurable diagnostics allowing fault history and reading fault codes at the unit. This option provides detection of the following faults: Air temperature sensor failure/fault and notification of acceptable economizer mode. The FDD system shall be certified by the Energy Commission as meeting the requirements.

Gas Heating Section

Note: *Applicable to Dual Fuel units.*

The heating section has a progressive tubular heat exchanger design using stainless steel burners and corrosion resistant steel throughout. An induced draft combustion blower is used to pull the combustion products through the firing tubes. The heater uses a direct spark ignition (DSI) system, on initial call for heat, the combustion blower purges the heat exchanger for 20 seconds before ignition. After three unsuccessful ignition attempts, the entire heating system will be locked out until manually reset at the thermostat/zone sensor.

Important: *For installation in SCAQMD only (3 to 5 tons only): This furnace does not meet the SCAQMD Rule 1111 14 ng/J NOx emission limit, and thus is subject to a mitigation fee of up to $450. This furnace is not eligible for the Clean Air Furnace Rebate Program: www.CleanAirFurnaceRebate.com*

Hinged Access Doors

Sheet metal hinges are available on the filter/evaporator, supply fan/heat, and the compressor/control access doors. A compressor isolation panel is included to ease commissioning and servicing of units.

High Static Motor

Oversized motor for applications where higher external static pressure capability is required. 3 to 5 tons standard efficiency units shall offer direct drive constant torque motors. 3 to 5 tons high efficiency shall offer direct drive constant CFM motors. 6 to 8.5 tons standard efficiency units shall offer belt drive motors.

Human Interface

The Human Interface shall have a 5 inch color touchscreen display that conforms to FCC Part 15 Class B with an Ingress Protection Rating of IP24.The display text shall be readable by a person with 20/20 vision at a distance of 3 feet and 60° angle at lighting levels ranging from 100 lux - 25,000 lux. Also, the display shall operate at temperatures of -40° C to 70° C. Firmware and unit configurations shall be able to be restored via a USB storage device.

Multiple-Zone VAV Control

Multiple-zone VAV control shall vary the speed of the indoor fan to maintain the duct static pressure at a setpoint. In cooling mode, the compressors shall be cycled (or economizer modulated) to maintain the supply air temperature (SAT) at the desired setpoint. In heating mode, the indoor fan shall operate at maximum speed whenever the heater operating.VAV units cannot be controlled by a thermostat.

Powered or Unpowered Convenience Outlet

This is a GFCI, 120V/15amp, 2 plug, convenience outlet, either powered or unpowered. When the convenience outlet is powered, a service receptacle disconnect will be available. The convenience outlet is powered from the line side of the disconnect or circuit breaker, and therefore will not be affected by the position of the disconnect or circuit breaker. This option can only be ordered when the Through-the-Base Electrical with either the Disconnect Switch or Circuit Breaker option is ordered.

Single Zone VAV – One Zone Variable Air Volume Mode

Single-zone VAV shall vary the indoor fan speed as the zone cooling or heating load changes, while cooling or heating capacity is cycled to maintain the supply air temperature at setpoint.The indoor fan shall operate at maximum speed whenever the heater is operating.

Note: *SZVAV requires the use of a zone temperature sensor. If a unit is configured for SZVAV, but is connected to a conventional thermostat, the unit will revert to multiple-speed (two-speed) indoor fan control.*

Multi-Speed Indoor Fan System

Multi-speed indoor fan system is designed for use in applications for meeting the minimum requirement of CA Title 24. This system incorporates a multi-speed fan control to change the speed of the fan to 66% of full airflow based off compressor stages.

Stainless Steel Drain Pan

This option provides excellent corrosion and oxidation resistance. The drain pan shall be reversible and constructed of 304 stainless steel.

Stainless Steel Heat Exchanger

The optional stainless steel heat exchanger is constructed of 409 stainless steel. It is resistant to corrosion and oxidation and easy to clean. The high strength to weight ratio allows for high ventilation rates with gas units. It is an excellent option to compliment the dehumidification option as a high outside air ventilation unit. With this option, a 10-year stainless steel heat exchanger warranty is standard.

Supply, Return, and Plenum Air Smoke Detector

With this option, if smoke is detected, all unit operation will be shut down. Reset will be manual at the unit. In order for the supply air smoke detector or return air smoke detector to properly sense smoke in the supply air stream or the return air stream, the air velocity entering the smoke detector unit must be between 500 - 4000 feet per minute. Equipment covered in this manual will develop an airflow velocity that falls within these limits over the entire airflow range specified in the evaporator fan performance table. Supply and/or Return Smoke Detectors may not be used with the Plenum Smoke Detector.

Thermal Expansion Valve

Thermal Expansion Valve is standard for all models.

Through-the-Base Electrical Access

An electrical service entrance shall be provided allowing electrical access for both control and main power connections inside the curb and through-the-base of the unit. Option will allow for field installation of liquid-tight conduit and an external field-installed disconnect switch.

Through-the-Base Electrical with Circuit Breaker

This option is a thermal magnetic, molded case, HACR Circuit Breaker with provisions for through-the-base electrical connections. The circuit breaker will be installed in a water tight enclosure in the unit with access through a swinging door. Wiring will be provided from the switch to the unit high voltage terminal block. The circuit breaker will provide overcurrent protection, be sized per NEC and cULus guidelines, and be agency recognized by cULus.

Through-the-Base Electrical with Disconnect Switch

This 3-pole, molded case, disconnect switch with provisions for through-the-base electrical connections are available. The disconnect switch will be installed in the unit in a water tight enclosure with access through a swinging door. Wiring will be provided from the switch to the unit high voltage terminal block. The switch will be cULus agency recognized.

Note: *The disconnect switch will be sized per NEC and cULus guidelines but will not be used in place of unit overcurrent protection.*

Through-the-Base Gas Piping

The unit includes a standard through-the-base gas provision. This option has all piping necessary including black steel pipe segments, manual gas shut-off valve, elbows, and union. The manual shutoff valve includes a 1/8” NPT pressure tap. This assembly will require minor field labor to install (dual fuel only).

Trane® Air-Fi® Wireless

Air-Fi® wireless communication shall be factory installed and tested. Air-Fi Wireless conforms to ANSI/ASHRAE Standard 135-2016 (BACnet®/ZigBee®[1]).

Two-Inch Filters

Two-inch MERV 8 and MERV 13 media filters shall be available on all models. When ordered, units come equipped with a filter removal tool.

Factory or Field Installed Options

Clogged Filter/Fan Failure Switch

A dedicated differential pressure switch is available to achieve active fan failure indication and/or clogged filter indication. These indications will be registered with a zone sensor with status indication lights. This option is available for microprocessor controlled units.

Differential Pressure Switches

These sensors allow individual fan failure and dirty filter indication for microprocessor controlled units. The fan failure switch will disable all unit functions and “flash” the Service LED on the zone sensor. The dirty filter switch will light the Service LED on the zone sensor and will allow continued unit operation.

Discharge Air Temperature Sensing

This option provides true discharge air temperature sensing in heating models. This option is available for microprocessor controlled units.

Economizer (Standard)

This accessory shall be available with or without barometric relief. The assembly includes fully modulating 0-100 percent motor and dampers, minimum position setting, preset linkage, wiring harness with plug, spring return actuator and fixed dry bulb control. The barometric relief shall provide a pressure operated damper that shall be gravity closing and shall prohibit entrance of outside air during the equipment “off” cycle. Optional solid state or differential enthalpy control shall be available for either factory or field installation. The economizer arrives in the shipping position and shall be moved to the operating position by the installing contractor.

[1] ZigBee is a registered trademark of the ZigBee Alliance.

Electric Heaters

Electric heat modules shall be available for installation within basic unit. Electric heater elements shall be constructed of heavy-duty nickel chromium elements internally delta connected for 240 volt, wye connected for 480 and 600 V. Staging shall be achieved through ReliaTel™. Each heater package shall have automatically reset high limit control operating through heating element contactors. All heaters shall be individually fused from the factory, where required, and shall meet all NEC and CEC requirements when properly installed. Power assemblies shall provide single-point connection. Electric heat modules shall be cULus listed.

Frostat™

This option is to be utilized as a safety device. The Frostat™ opens when temperatures on the evaporator coil fall below 10°F. The temperature will need to rise to 50°F before closing. This option should be utilized in low airflow or high outside air applications (cooling only).

Hail Guards

Hail protection quality coil guards are available for condenser coil protection.

LonTalk® Communication Interface

This option shall be provided to allow the unit to communicate as a Tracer® LCI-R device or directly with generic LonTalk® Network Building Automation System Controls.

Low Leak Economizer

This accessory meets low leak requirements for ASHRAE 90.1, IECC, and CA Title 24 standards (4 cfm/ft^2@1" wg exterior air/return air). This option allows 100% outdoor air supply from 0-100% modulating dampers and is standard with barometric relief. It can be paired with powered exhaust for additional building pressure relief. This option can be paired with or without Fault Detection and Diagnostics (FDD) to meet current mandatory CA Title 24 requirements.

Note: *Available on downflow units only.*

BACnet® Communication Interface

This option shall be provided to allow the unit to communicate directly with a generic open protocol BACnet® MS/TP Network Building Automation System Controls.

Reference or Comparative Enthalpy

Reference Enthalpy is used to measure and communicate outdoor humidity. The unit receives and uses this information to provide improved comfort cooling while using the economizer. Comparative Enthalpy measures and communicates humidity for both outdoor and return air conditions, and return air temperature. The unit receives and uses this information to maximize use of economizer cooling, and to provide maximum occupant comfort control. Reference or Comparative Enthalpy option shall be available when a factory or field installed Downflow Economizer is ordered. This option is available on all downflow models.

Trane® Communication Interface

This option shall be provided to interface ReliaTel™ controlled units with the Trane® Integrated Comfort™ systems.

Field Installed Options

CO_2 Sensing

The CO_2 sensor shall have the ability to monitor space occupancy levels within the building by measuring the parts per million of CO_2 (Carbon Dioxide) in the air. As the CO_2 levels increase, the outside air damper modulates to meet the CO_2 space ventilation requirements.

Two field installed kits are offered: CO_2 sensor and wiring or CO_2 sensor only. The CO_2 sensor only kit should be ordered with factory installed CO_2 Sensor wiring. Factory installed CO_2 sensor wiring saves set-up time and ensures proper unit connections for the CO_2 sensor.

Low Leak Economizer

This accessory meets low leak requirements for ASHRAE 90.1, IECC, and CA Title 24 standards (4 cfm/ft^2@1" wg exterior air/return air). This option allows 100% outdoor air supply from 0-100% modulating dampers and is standard with barometric relief. It can be paired with powered exhaust for additional building pressure relief.

Note: *Available on downflow units only.*

Manual Outside Air Damper

This rain hood and screen shall provide up to 50 percent outside air.

Motorized Outside Air Damper

Manually set outdoor air dampers shall provide up to 50 percent outside air. Once set, outdoor air dampers shall open to set position when indoor fan starts. The damper shall close to the full closed position when indoor fan shuts down.

Outside Air Measuring/Monitoring Control (Traq Dampers)

- Requires Low Leak Economizer (Factory or Field Installed)
- Includes
  - UC400 Controller
  - Damper Actuator
  - Pressure Sensors

Powered Exhaust

The powered exhaust, available for 6 to 10 tons units, shall provide exhaust of return air, when using an economizer, to maintain better building pressurization.

Programmable Night Setback

Auto or manual changeover with seven-day programming. Keyboard selection of Heat, Cool, Fan, Auto, or On. All programmable sensors have System On, Heat, Cool, Service LED/indicators as standard. Night Setback Sensors have one (1) Occupied, one (1) Un-occupied, and one (1) Override program per day.

Remote Potentiometer

The minimum position setting of the economizer shall be adjusted with this accessory.

Roof Curb

The roof curb shall be designed to mate with the unit’s downflow supply and return and provide support and a water tight installation when installed properly. The roof curb design shall allow field-fabricated rectangular supply/return ductwork to be connected directly to the curb. Curb shall be shipped knocked down for field assembly and shall include wood nailer strips.

Thermostat

Two stage heating and cooling operation or one stage heating and cooling shall be available in either manual or automatic changeover. Automatic programmable electronic with night set back shall also be available.

Ventilation Override Accessory

With the Ventilation Override Accessory installed, the unit can be set to transition up to 3 different pre-programmed sequences for Smoke Purge, Pressurization, and Exhaust. The transition occurs when a binary input on the RTOM is closed (shorted). This would typically be a hard wired relay output from a smoke detector or fire control panel. The ventilation override accessory shall be available as field installed.

Zone Sensor

This control shall be provided to interface with the Micro equipped units and shall be available in either manual, automatic programmable with night setback, with system malfunction lights, or remote sensor options.

The AHRI Certified mark indicates Trane U.S. Inc. participation in the AHRI Certification program. For verification of individual certified products, go to ahridirectory.org.

Trane - by Trane Technologies (NYSE: TT), a global climate innovator - creates comfortable, energy efficient indoor environments for commercial and residential applications. For more information, please visit trane.com or tranetechnologies.com.

Trane has a policy of continuous product and product data improvement and reserves the right to change design and specifications without notice. We are committed to using environmentally conscious print practices.

PKGP-PRC013AA-EN 20 Dec 2022
Supersedes PKGP-PRC013Y-EN (Sep 2022)

©2022 Trane

MITSUBISHI ELECTRIC

CITYMULTI® VRF

CITY MULTI CATALOG | 07.2020 | © 2020 MITSUBISHI ELECTRIC TRANE HVAC US LLC

A LEADER IN ADVANCED HVAC SYSTEMS

When it comes to providing personalized comfort in every room of every building, Mitsubishi Electric Trane HVAC US is here to help. No other company is as committed to creating environmentally friendly and affordable technology that's ideal for today's home and work environments, no matter the size or shape.

QUALITY

Mitsubishi Electric is consistently recognized by HVAC contractors as a preferred brand of ductless and variable refrigerant flow (VRF) systems, with the highest quality rating among manufacturers. With over 30 years of industry leadership, we are proud to be a leading brand of VRF technology.

PERFORMANCE

We deliver a complete range of compact and powerful heat pump and heat recovery products that are also intelligent, quiet, and use energy efficiently.

TRAINING

We provide comprehensive product and applications instruction through our regional training centers across the United States and Mexico.

SUPPORT

We offer the most extensive network of experienced VRF zoning system professionals to provide project consultation in the areas of application planning and design, plus installation and start-up. Post installation, we provide support, including user training and operation monitoring.

GROWTH

Our products and services provide opportunities for architects, engineers, distributors and contractors to enhance and grow their businesses. With nearly 30 years of consistent growth, we continue to lead the ductless and VRF market's acceleration.

ECO CHANGES

Eco Changes is our commitment to continuously strive for a greener tomorrow through cutting-edge global environmental technologies and outstanding strength in manufacturing.

TABLE OF CONTENTS

Overview of CITY MULTI® 5
Product Advantages 10

OUTDOOR UNITS

Outdoor Unit Showcase 14
R2–Series 17
H2i® R2–Series 20
Y-Series 21
H2i Y-Series 23
S-Series (PUMY) 25
W-Series 27
Low Ambient Cooling Kit 29
Cold Weather Solutions Guide 30
Linear Expansion Valve (LEV) Kit 32

INDOOR UNITS

Indoor Unis Overview 36
PKFY (Wall–Mounted) 37
PLFY (Four-Way Ceiling Cassette) 38
PMFY (One-Way Ceiling Cassette) 41
PCFY (Ceiling–Suspended) 42
PEFY (Ceiling–Concealed Ducted) 43
FB (M,L,H) Filter Boxes 45
PFFY (Floor-Standing) 46
PVFY (Multi-Position Air Handler) 47
PWFY (Hydronic Heat Exchanger) 48

VENTILATION

PremiSys® Dedicated Outdoor Air System . . 52
PremiSys Fusion 53
Lossnay® Energy Recovery Ventilators (ERVs) 54
Dedicated Outdoor Air System (DOAS) . . . 55
PEFY-OA 56

CONTROLS AND SOFTWARE TOOLS

Controls Network 60
Integrated Centralized Control Web 61
Centralized Controller AE-200A/AE-50A . . 62
Centralized Controller AEW-50A 64
Centralized Controller TC–24B 65
License Options for Centralized Controllers . 66
Input/Output Controllers 67
Zone Controllers 69
Touch MA & kumo cloud® 70
Deluxe MA & Simple MA 71
Wireless MA 72
System Integration 73
Building Connect+ 74
Diamond Controls™ 76
Diamond Controls Applications 77
Universal Maintenance Tool 80

SPECIFICATIONS

Outdoor Units 84
Indoor Units 118
Ventilation 130

UBER ADVANCED TECHNOLOGIES GROUP

PITTSBURGH, PA

WHY CITY MULTI® VRF SYSTEMS?

As a global leader in VRF zoning solutions, you can trust that you're receiving the most advanced technology and dedicated support in the industry.

- **Ultra-Efficient Design** to ensure total comfort in any commercial space
- **Advanced INVERTER Technology** varies the speed of the compressor for more efficient cooling and heating
- **Complete Zoning Control** so you heat and cool the areas that need it without paying for the ones that don't
- **Design Flexibility** for any application, from modern designs to historic renovations
- **Complete Product Family** to handle every job from the smallest spaces to the largest buildings and campuses
- **Sustainable Technology** that contributes to Leadership in Energy & Environmental Design (LEED) credits and saves energy
- **Quiet Operation** that's even softer than a human whisper
- **Simultaneous Operation** to heat and cool with just two refrigerant pipes

QUIET OPERATION

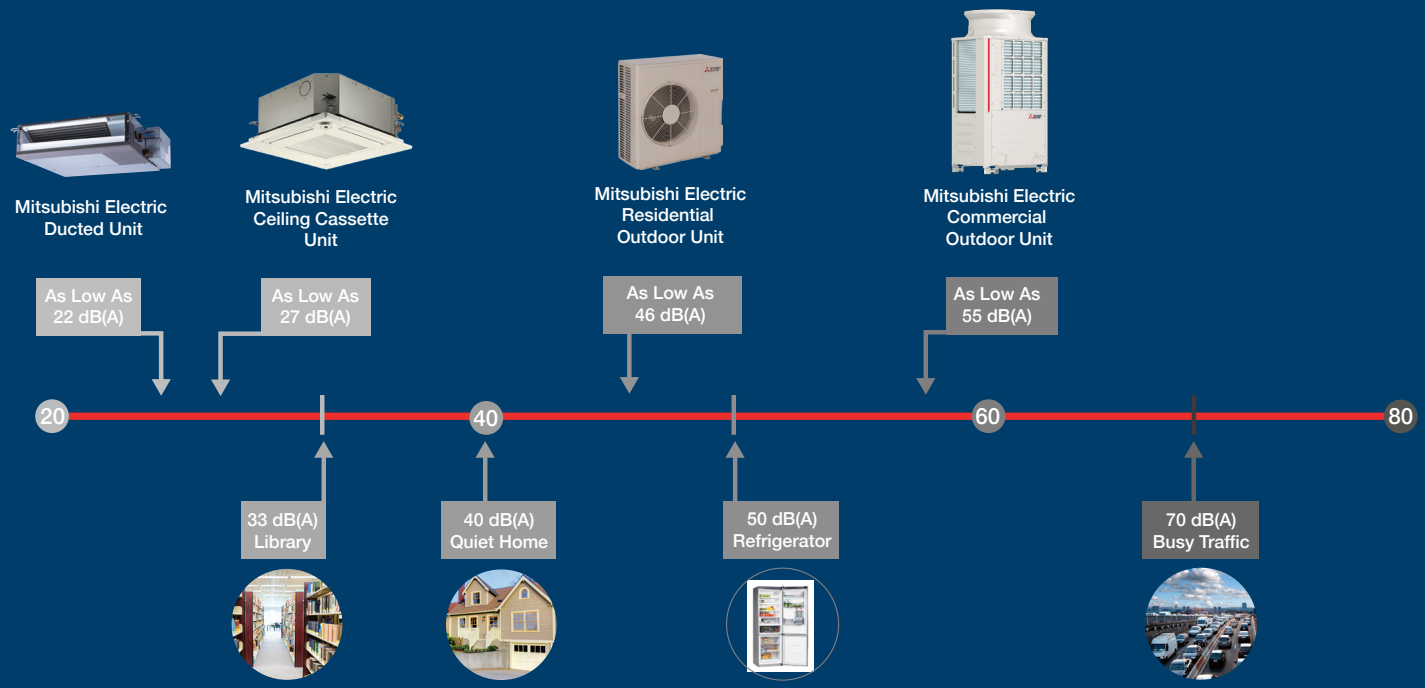

OUTDOOR UNITS

Mitsubishi Electric offers an extensive lineup of air-source and water-source units that can be tailored to any application's requirements.

HEAT RECOVERY

HEAT PUMP

R2-Series / H2i® R2-Series
(Air-Source)

Y-Series / H2i® Y-Series
(Air-Source)

S-Series / H2i® S-Series (PUMY)
(Air-Source)

WR2-Series
(Water-Source)

WY-Series
(Water-Source)

Mitsubishi Electric's wide range of indoor units enables you to choose the style and size that meets your requirements for layout and design.

PLFY-EP-NEMU (33"x33")
PLFY-P-NFMU (22"x22")
Ceiling Cassette (4-way)

PMFY
Ceiling Cassette (1-way)

PCFY
Ceiling-Suspended

PVFY
Multi-position Air Handler

PKFY
Wall-Mounted

PWFY-NMU-E2-AU (HEX)
PWFY-NMU-E-BU (Booster)
Hydronic Heat Exchanger

PEFY-P-NMSU Low Profile
PEFY-P-NMAU Medium Static
PEFY-P-NMHU / NMHSU High Static
Ceiling-Concealed Ducted

PFFY-NEMU Exposed
PFFY-NRMU Concealed
Floor-Standing

CITY MULTI® CONTROLS NETWORK (CMCN)

The flexibility of CITY MULTI controls allows you to select the level of control and integration that fits the needs of your application.

ZONED CONTROLLERS

PAR-FL32MA
Wireless MA
Wireless Remote
Controller

PAC-YT53CRAU
Simple MA
Remote Controller

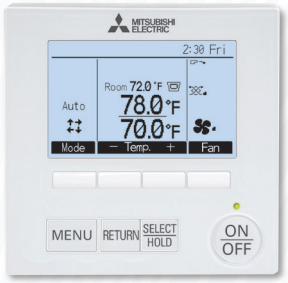

PAR-40MAAU
Deluxe MA
Remote Controller

PAR-U01MEDU
SmartME Controller®

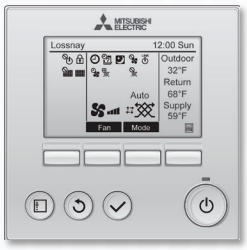

PZ-61DR-E
Lossnay® Remote
Controller

PZ-43SMF
Lossnay Remote
Controller

PAR-CT01MAU-SB
Touch MA
Remote Controller

kumo cloud®
App-based Controller

CENTRALIZED CONTROLLERS

AE-200A/AE-50A
Touch Screen
Centralized Controllers
(Browser Capable)

EW-50A
Centralized Controller
(Browser Capable)

TC-24B
Touch Screen
Centralized Controller

ICCW
Integrated Centralized
Control Web

CUSTOM CONTROL SOLUTIONS

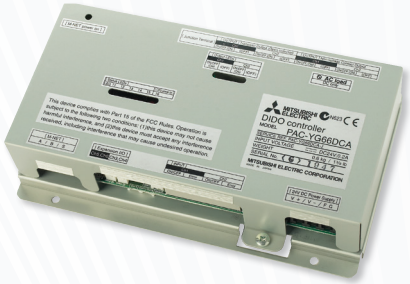

PACY-YG60MCA (PI)
PAC–YG63MCA (AI)
PAC–YG66DCA (DIDO)
I/O Control Boards

LMAP04U
LonWorks® Interface

DC-8000
Diamond Controls™
Building Management
System

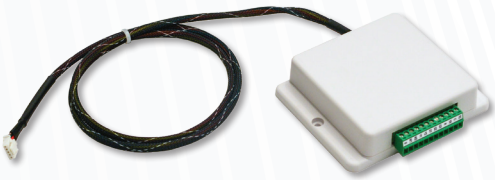

PAC-US444CN
Thermostat Interface

CITY MULTI® HIGH-PERFORMANCE, MODULAR VRF SYSTEMS

CITY MULTI outdoor units feature a lightweight modular design with a minimal footprint, lower sound level, easy piping, maintenance and much more.

1 INVERTER-DRIVEN COMPRESSOR TECHNOLOGY

The compressor varies its speed to match the indoor cooling or heating demand to consume only the energy required. No other compressor design can match the efficient performance.

2 EASY MAINTENANCE

In many cases, our systems allow an indoor unit to be serviced while other indoor units within the same piping system are still in operation. Indoor units only require periodic filter changes and cleaning. Protective coating comes standard on air-source outdoor units to lengthen coil life while additional Bermuda Special treatment, designated -BS within the model number, provides enhanced protection for the rest of the outdoor unit in sea-coast environments.

3 LONG LINE LENGTHS

The R2- and Y-Series outdoor units allow for long line lengths to the connected indoor units. Maximum total length of refrigerant piping is up to 2,624 feet for R2–Series and up to 3,280 feet for Y–Series.

4 ADJUSTABLE STATIC PRESSURE

R2–, Y– and H2i R2- and Y–Series outdoor fan features adjustable static pressure up to 0.32″ W.G., enabling the use of louvers or ductwork in its installation. The static pressure setting is adjustable by changing a dip switch. The default setting is 0″ W.G., with options for 0.12″, 0.24″ and 0.32″ W.G.

5 QUIET OPERATION

CITY MULTI air-source outdoor units operate at sound levels as low as 55 dB(A)—the level of a common office environment, restaurant conversation or background music. Water-source units operate as low as 47 dB(A). Contributing features include our INVERTER-driven compressor compartment sealed by insulation-lined metal panels, vibration-absorbing compressor mounts, inverter-driven fan and Low Noise operating mode.

LOW AMBIENT OPERATION
CITY MULTI systems provide 100% cooling capacity down to -10° F with the optional low ambient kit. Systems provide guaranteed heating capacity down to -22° F, with operation possible to -31° F (N-Generation H2i® Units).

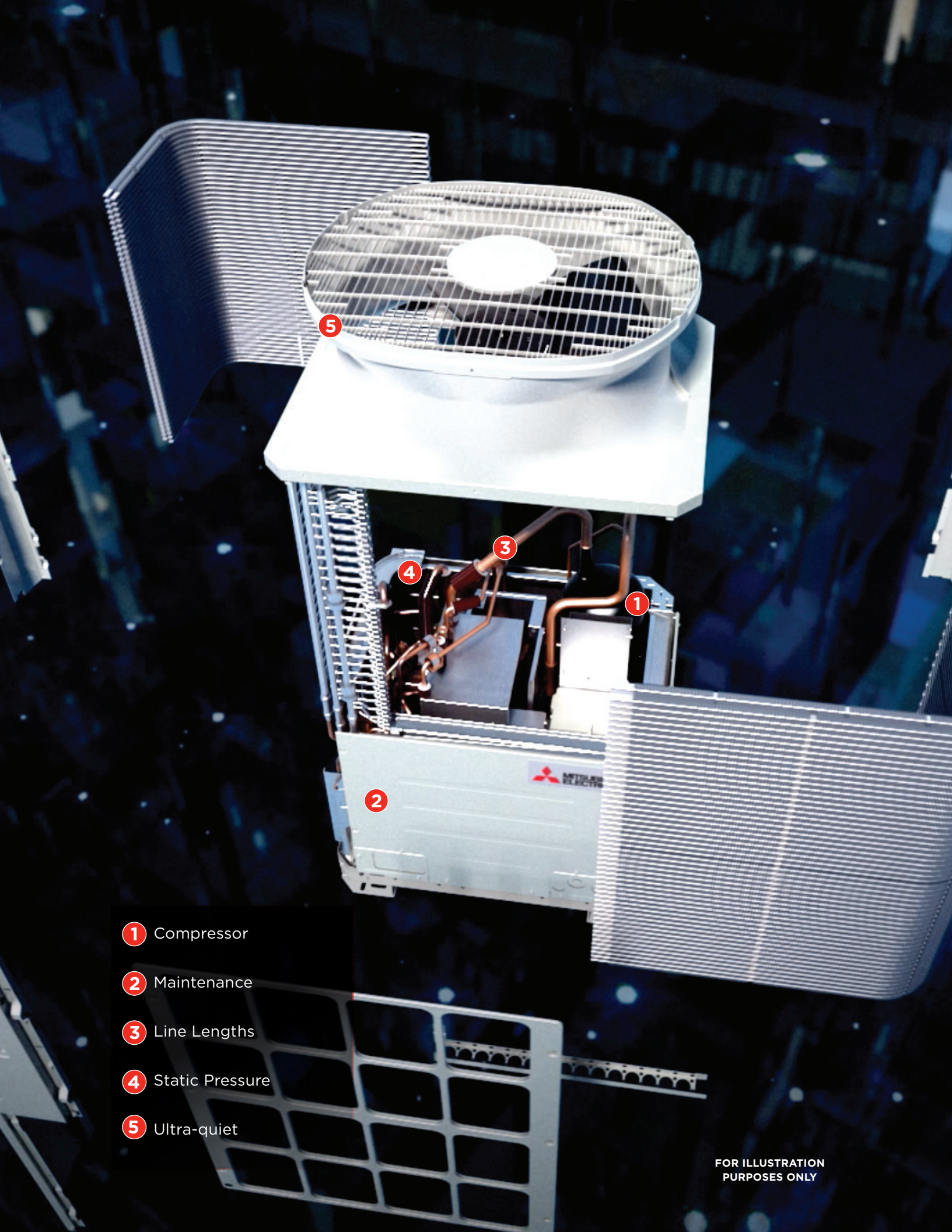
5
3
4
1
2
1 Compressor
2 Maintenance
3 Line Lengths
4 Static Pressure
5 Ultra-quiet
FOR ILLUSTRATION PURPOSES ONLY

OUTDOOR UNITS

R2-Series/H2i® R2-Series/Y-Series/H2i Y-Series/S-Series / H2i S-Series / W-Series

UBER ADVANCED TECHNOLOGIES GROUP

PITTSBURGH, PA

Outdoor units featuring cold weather accessories, including hail and snow guards

OUTDOOR UNITS

OUTDOOR UNIT SHOWCASE

TONS	6	8	10	12	14	16	18
MBtu/h	72	96	120	144	168	192	216

R2-Series Heat Recovery
(Standard and High-Efficiency)
* 32-36 ton only available for high efficiency models
30-ton combination not available

72-432
80-480
PURY up to 50 indoor units

R2-Series H2i® Heat Recovery

72-240
80-270
PURY up to 50 indoor units

Y-Series Heat Pump
(Standard and High-Efficiency)

72-432
80-480
PUHY up to 50 indoor units

Y-Series H2i® Heat Pump

72-240
80-270
PUHY up to 50 indoor units

WR2-Series Heat Recovery
(Water-Source)

72-336
80-378
PQRY up to 50 indoor units

WY-Series Heat Pump
(Water-Source)

72-360
80-405
PQHY up to 50 indoor units

S-SERIES (PUMY)

TONS	3	3.5	4	4.5	5	5.5
MBtu/h	36	42	48	54	60	66

S-Series Heat Pump
36-60
40-66
PUMY up to 12 indoor units

S-Series H2i® Heat Pump
36-48
42-54
PUMY up to 12 indoor units

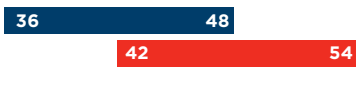

CITY MULTI® OUTDOOR UNIT OPERATING RANGES

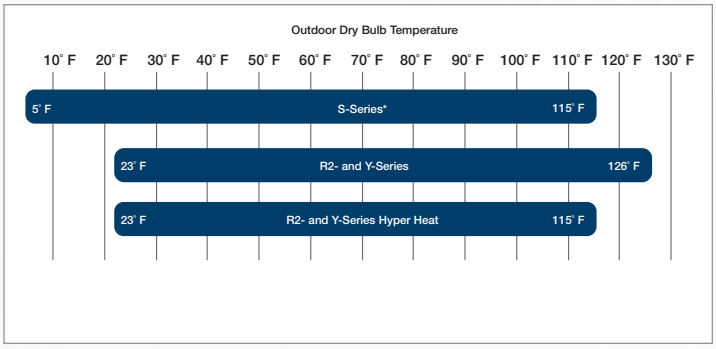

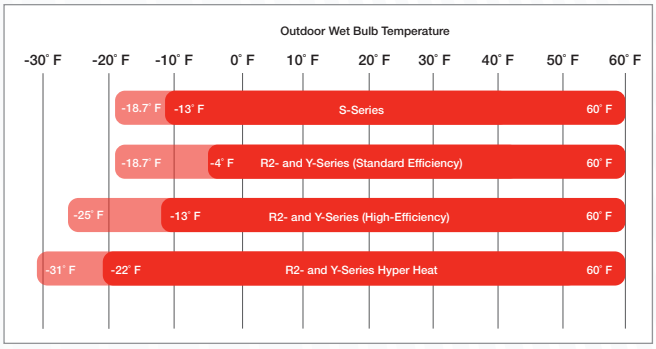

*Low ambient operation may require the use of low ambient accessories.

N-GENERATION

The industry's first two-pipe heat recovery system that simultaneously cools and heats.

The R2-Series simultaneously cools and heats different zones within a building to provide energy-saving heat recovery operation through the use of the Branch Circuit (BC) Controller.

- Up to a 30% smaller footprint than previous outdoor unit models
- Expanded vertical piping limits increase by over 130 feet
- Redesigned main BC Controller features a 14% reduction in height compared to previous models along with a removable drain pan
- Connect up to 11 sub-BC controllers to one main BC
- Requires approximately 13% less refrigerant charge than L-Generation
- Broader range of capacities, with units from 6 to 36 tons
  - New 16-, 18- and 20-ton high-efficiency single modules
  - 16-20 tons units are high-efficiency only
- Increased energy efficiency with an up to 27% improvement than prior generation units
- New 4-sided heat exchanger, compressor and fan blade design improve both nominal and seasonal efficiency levels
- Five air flow settings
- Unique flat tube aluminum heat exchanger ensures maximum heat transfer, particularly at part-load conditions
- Improved heating performance, with H2i® liquid injection technology standard on high-efficiency models, provides comfort in any climate
- Built-in USB port allows for download and storage for up to five days of operational data directly into Maintenance Tool, resulting in simplified troubleshooting and maintenance
- Ultra-quiet noise levels. Improved compressor and fan design reduces noise output with decibel levels as low as 55 dB(A)

Refrigerant Piping Lengths *(Maximum Feet)*	
Total Length[1]	1,761–3,073
Farthest indoor from outdoor	541 (623 equivalent)
Maximum length between outdoor and single/main BC Controller	360
Maximum length between single/main BC controller & indoor	131–197
Indoor/Outdoor (Outdoor Higher)[3]	164
Indoor/Outdoor (Outdoor Lower)[4]	131
Indoor/BC Controller (Single/Main)[2]	49
Indoor/Indoor	98
Main Controller/Sub BC Controller	49

1. *Maximum Total Length is dependent on the outdoor unit model and distance between BC Controller.*
2. *Maximum length between single/main BC Controller and indoor is dependent upon the vertical differential between the single/main BC Controller and the indoor unit.*
3. *295' is available depending on model and installation conditions. For more detailed information, contact your local distributor.*
4. *197' is available depending on model and installation conditions. For more detailed information, contact your local distributor.*

SIMULTANEOUS OPERATION

CITY MULTI® VRF systems provide simultaneous cooling and heating any time of year. This innovation transfers heat from one zone, normally ejected outside the building, to be used in another zone within the building.

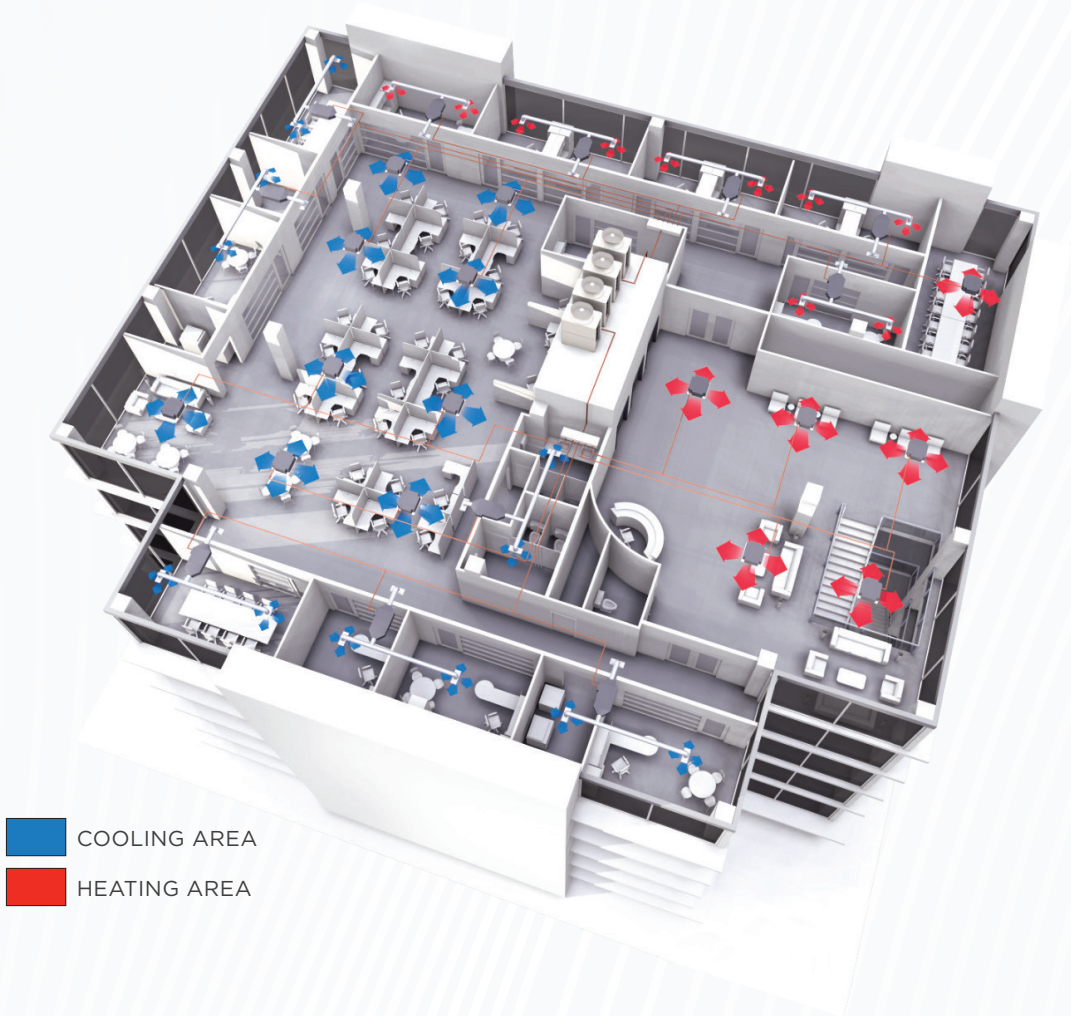

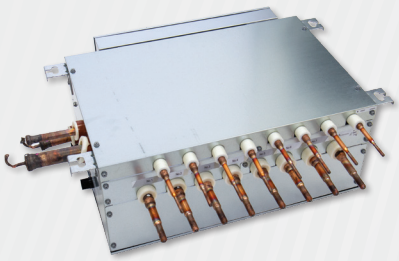

Branch Circuit Controller

The BC Controller is the technological heart of the CITY MULTI R2–Series. It works in unison with the outdoor unit to provide simultaneous cooling and heating, something no other two–pipe system can do.

Single BC Controller:

For systems with up to 120,000 Btu/h nominal cooling capacity that require only one BC Controller.

Main BC Controller:

For larger systems that require the use of Sub BC Controllers.

Sub BC Controller:

Used with a Main BC Controller to connect additional indoor units. A maximum of 11 Sub BC Controllers can be connected to one Main BC Controller per system.

THE TWO-PIPE ADVANTAGE

CITY MULTI® heat recovery systems provide simultaneous cooling and heating with just two refrigerant pipes. As the number of indoor units grow, so do the two-pipe installations savings, in terms of connections (refrigerant and electrical) as well as maintenance access.

FEWER CONNECTIONS REQUIRED FOR SIMULTANEOUS OPERATION

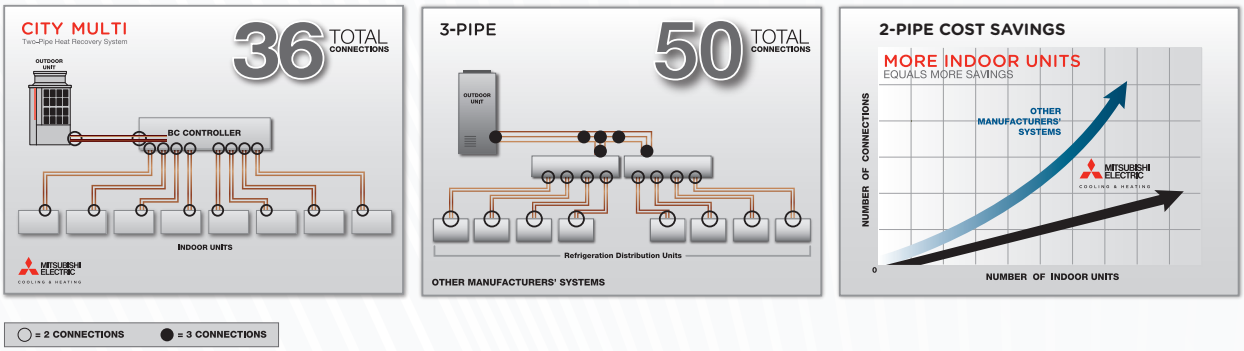

EFFECTIVE ENERGY USAGE

The total applied capacity of the R2-Series system's indoor units can be up to 150% of the capacity of the outdoor units. This is made possible by taking advantage of load diversity and simultaneous cooling and heating operation. CITY MULTI VRF systems can satisfy a significantly higher building load by efficiently distributing the capacity to the outdoor units and indoor units while using much less energy. CITY MULTI systems, in combination with Mitsubishi Electric's Integrated Centralized Control Web (ICCW) configured with optional Energy Allocation software, appropriately allocates the cooling and heating usage among the tenants. The allocation is based on each tenant's usage of comfort control based on the temperature setting on their system controller. ICCW can control up to 2,000 indoor units from a single PC.

MODULAR SCALABILITY

With the Twinning Kit accessory, the modular units easily combine in the field to create a larger capacity system. Only two refrigerant pipes need to be twinned, saving time and materials. Oil and pressure equalization lines aren't needed when combining modules. This also helps to reduce installation cost.

SIMULTANEOUS OPERATING RANGE

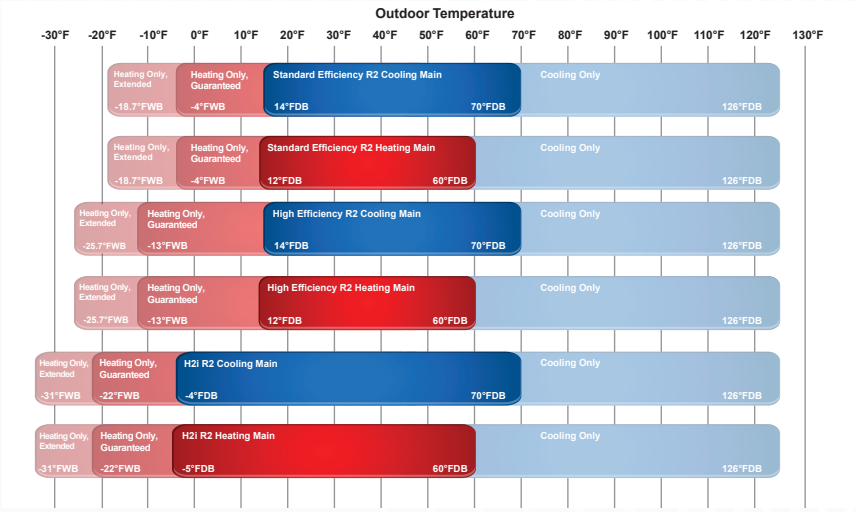

H2i® R2-SERIES

Bringing year-round comfort to extreme climates with energy recovery

The Hyper-Heating INVERTER® (H2i) R2-Series simultaneously cools and heats different zones within a building to provide energy saving heat recovery operation. Our 2-pipe H2i R2-Series gives you the flexibility to fit the specific needs of any building and provides reliable cold-climate heating performance.

- 2-pipe, simultaneous operation for up to 50 zones
- Available capacities (6, 8, 10, 12, 16, 20 ton)
- 50%–150% connectible capacity
- 70% heating capacity at -22° F, up to 85% heating capacity at -13° F and 100% heating capacity at -4° F (6 ton and 8 ton)
- Improved Hyper-Heating INVERTER® (H2i) technology delivers superior heating performance in extreme climates
- Introduction of 10 ton single module
- Optional - Provides continuous heating during defrost, improves occupant comfort
- Uses BC Controllers and headers to provide piping design flexibility and simultaneous operation
- INVERTER-driven compressor for outstanding performance and optimized energy usage
- Industry leading performance with lower power requirements
- Connects to CITY MULTI® indoor units; controlled via CITY MULTI Controls Network (CMCN)

Maximum Refrigerant Piping Lengths (Feet)	
Total length (maximum total length is dependent on the outdoor unit model and distance between BC Controller)	1,804–2,624
Farthest indoor from outdoor	541 (623 equivalent)
Maximum length between outdoor & single/main BC Controller	360
Maximum length between single/main BC Controller and indoor	131-197
Vertical Differentials Between Components (Maximum Feet)	
Indoor/Outdoor (Outdoor Higher)	164
Indoor/Outdoor (Outdoor Lower)	131
Indoor/BC Controller (Single/Main) (Maximum length between single/main BC Controller and indoor is dependent upon the vertical differential between the single/main BC Controller and the indoor unit)	49
Indoor/Indoor	98
Controller/Sub BC Controller	49

N-GENERATION

Two-Pipe Zoned Heat Pump System

Y-Series outdoor units are flexible enough to cool or heat up to 50 individual zones, maximizing building design options. The modular unit design features a small footprint and low operating sound.

- Improved heating performance providing up to 28% improvement compared to previous L generation
- Flash injection technology built-in as standard (High-Efficiency models)
- Up to 28% IEER improvement compared to L-Generation models
- HexiCoil™ aluminum flat tube heat exchanger technology, eliminating copper tubing from the coil (High-Efficiency tier)
- Significantly less refrigerant charge required vs. prior models
- Supports up to 50 indoor units per outdoor unit
- Broader range of capacities, with units from 6 to 36 tons
  - New 18- and 20-ton high-efficiency single modules
- Optimized refrigerant circuit and component design for improved flow distribution, allowing maximum energy transfer with minimal power input
- Superior high-ambient cooling performance with guaranteed operation to 126° F
- Extended 10-year parts and compressor warranty available

HEXICOIL CONDENSER COIL TECHNOLOGY (High Efficiency tier)

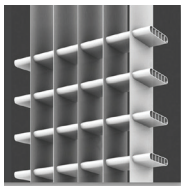

- Optimized cross-sectioned tubed walls ensure maximum heat transfer
- Zinc-coated for long-term corrosion resistance
- Unique fin shape and coating provide water shedding capability
- Capillary tube system provides even fluid distribution

Maximum Refrigerant Piping Lengths (Feet)	
Total Length	3,280
Indoor to Outdoor	541
Indoor to First Branch	295
Vertical Differentials Between Units (Maximum Feet)	
Indoor/Outdoor (Outdoor Higher) [1]	164
Indoor/Outdoor (Outdoor Lower) [2]	131
Indoor/Indoor	98

1. 295' is available depending on model and installation conditions. For more detailed information, contact your local distributor.
2. 197' is available depending on model and installation conditions. For more detailed information, contact your local distributor.

ULTIMATE IN ZONING

The CITY MULTI® Y-Series uses a two-pipe system with a wide variety of indoor units and individual zone controllers to provide the ultimate zoning system. Headers and T-branches simplify the piping design and provide design freedom for placement of both piping and indoor units. Individual zones are managed by remote controllers placed in each zone or by the centralized controller.

Conference Room Application

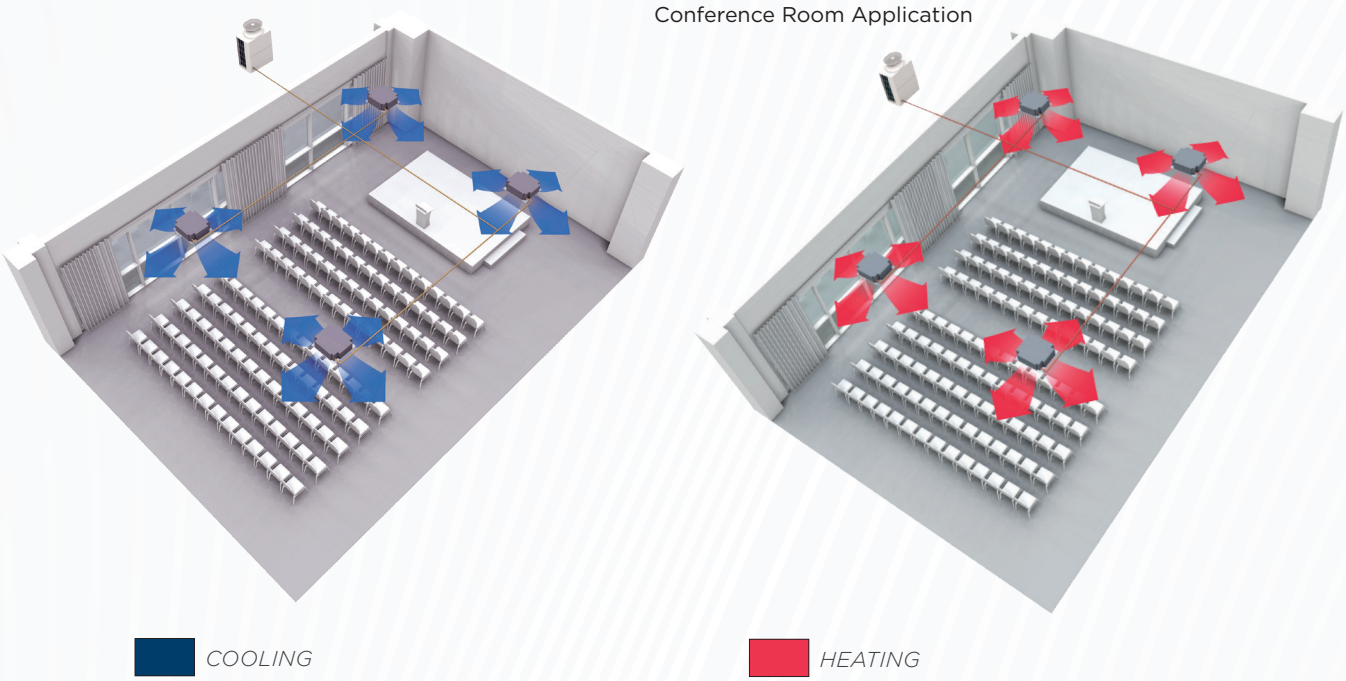

INTELLIGENT ENERGY USAGE

The highly responsive INVERTER technology and customized zone control of the CITY MULTI Y-Series provides year-round savings. In warm summer months, the Y-Series provides exceptional zoned cooling, and in cold winter months, the INVERTER-driven compressor provides outstanding heating performance. CITY MULTI systems, in combination with Mitsubishi Electric's Integrated Centralized Control Web configured with optional ICCW software, appropriately allocates the cooling and heating usage among the tenants. The allocation is based on each tenant's actual usage. Integrated Centralized Control Web can control up to 2,000 indoor units from a single PC.

DESIGN FLEXIBILITY

Flexibility is the key with the CITY MULTI Y-Series. The Y-Series, just like the R2-Series, can condition up to 50 zones. By using T-branches and headers, the Y-Series provides the ultimate in piping design flexibility that is truly simple in application.

Bringing year-round comfort to extreme climates with energy recovery

Hyper-Heating INVERTER® (H2i) technology enhances the Y-Series by providing full heating capacity to -4° F outdoor ambient temperature. H2i technology is exclusive to Mitsubishi Electric and is available in select CITY MULTI® VRF units.

- Heat pump that provides either all-cool or all-heat operation in up to 50 zones
- Available capacities (6, 8, 10, 12, 16, 20 ton)
- 50%–130% connectible capacity
- Extreme performance provides up to 100% heating capacity at - 4° F, up to 85% heating capacity at -13° F, and up to 70% heating capacity at -22° F
- Uses T-branches and headers to provide piping design flexibility
- INVERTER-driven compressor for outstanding performance and optimized energy usage
- Industry leading performance with lower power requirements
- Connects to CITY MULTI indoor units; controlled via CITY MULTI Controls Network (CMCN)

Maximum Refrigerant Piping Lengths (Feet)	
Total Length	3280
Indoor to Outdoor	541
Indoor to First Branch	295
Vertical Differentials Between Units (Maximum Feet)	
Indoor/Outdoor (Outdoor Higher)	164
Indoor/Outdoor (Outdoor Lower)	131
Indoor/Indoor	98

1. 295' is available depending on model and installation conditions. For more detailed information, contact your local distributor.
2. 197' is available depending on model and installation conditions. For more detailed information, contact your local distributor.

EXTREME HEATING PERFORMANCE

With its expanded heating capabilities, the CITY MULTI® H2i® R2- and Y-Series provides year-round comfort, even in extreme climates.

- At -4° F outdoor temperature, the H2i system can provide 100% of rated heating capacity
- At -13° F outdoor temperature, the system can provide up to 85% heating capacity
- At -22° F, the system can provide up to 70% heating capacity

UNEQUALED COMFORT

The patented flash injection process cools the compressor, allowing higher speeds at a lower outdoor temperature without overheating. This also allows the system to maintain indoor coil temperatures providing phenomenal heating performance at low temperatures. The Hyper–Heating INVERTER® combines the ultimate in application flexibility and powerful conditioning capabilities to deliver personalized comfort control to multiple zones of a commercial or institutional building. The outdoor units deliver full-sized performance from a compact, space–saving design for ease of transportation and installation. The INVERTER-driven scroll compressor delivers the precise amount of comfort to the zones as required.

HYPER-HEATING INVERTER VS. OTHERS

(72,000 Btu/h, 70° F W.B. entering Indoor Unit)

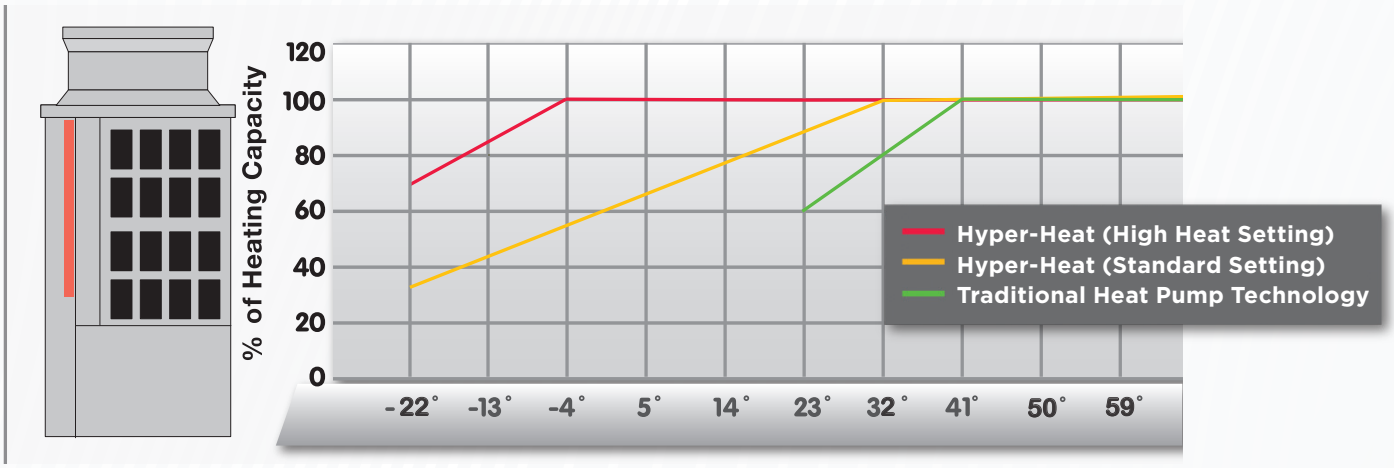

S-SERIES (PUMY)

Solutions for light commercial and large residential applications

The CITY MULTI® S-Series (PUMY) is a single-phase heat pump system ideal for light commercial or large residential applications. Featuring best-in-class efficiency ratings and ENERGY STAR® qualification, PUMY systems are designed to deliver operational cost savings and long-time performance to a homeowner or building owner. It uses the CITY MULTI Controls Network (CMCN) to cool or heat up to 12 individual zones with a choice of indoor unit styles.

- Single-phase 208/230V operation allows use in residential and light commercial applications
- Systems available from 36,000–60,000 Btu/h
- All models are Energy Star® qualified
- SEER rating improvement of 8% *(average vs. prior models)*
- HSPF rating improvement of 3% *(average vs. prior models)*
- Blue-fin condenser coating standard on all models
- Extended heating operating range down to -18º F
- Extended cooling operating range down to 5º F
- Connects up to 12 indoor units

Maximum Refrigerant Piping Lengths (Feet)	
Total Length	984[1]
Indoor to Outdoor	492[2]
Indoor to First Branch	98
Vertical Differentials Between Units (Maximum Feet)	
Indoor/Outdoor (Outdoor Higher)	164
Indoor/Outdoor (Outdoor Lower)	131
Indoor/Indoor	49

1. Applies to P36 and P48 models only. P60 is 492'.
2. Applies to P36 and P48 models only. P60 is 262'.

H2i® S-SERIES (PUMY)

Introducing the expansion of the S-Series (PUMY) outdoor unit lineup to include Hyper-Heating INVERTER® (H2i®) technology.

Part of the CITY MULTI® family, the H2i® PUMY is a single-phase heat pump ideal for light commercial applications including banks, churches, schools, server rooms, retail centers and more.

- Available in 36,000 and 48,000 Btu/h capacities
- 100% heating capacity at 1° F
- 78% heating capacity down to -13°F, utilizing flash injection technology
- Models are Energy Star® qualified
- Base Pan Heater standard

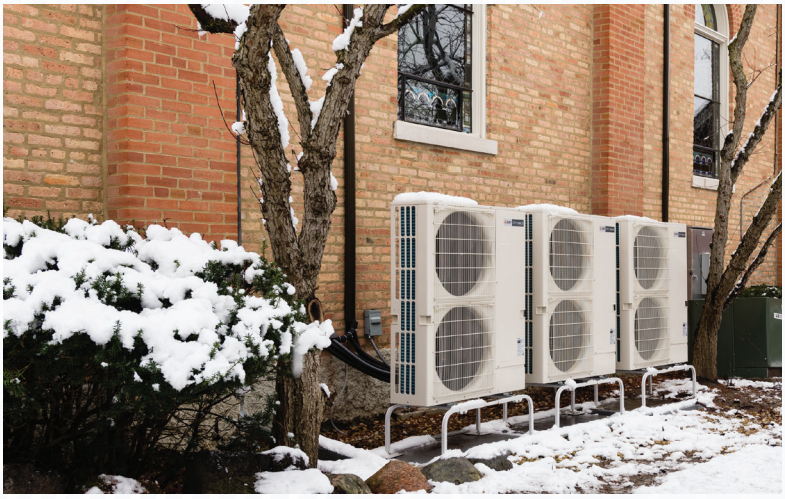

W-SERIES

Modular heat pump systems that combine the convenience of water source with VRF technology

W-Series units are easily installed indoors, which means that system performance efficiency is independent of outdoor ambient temperatures. W-Series includes WR2 models for simultaneous cooling and heating, and WY models for independent cooling and heating operation.

- Single modules up to 20 tons with the ability to combine single modules for systems up to 30 tons
- 208/230V, 3-Phase, 60 Hz and 460V, 3-Phase, 60 Hz options
- 0-10V output signal to modulate water flow for compliance with energy codes
- Enhanced water-side heat exchanger design for improved efficiency and reduced risk of clogging
- Designed for closed water loops
- Connects to CITY MULTI® indoor units and controlled via CITY MULTI Controls Network (CMCN)
- Stack multiple units on a field-supplied rack to take advantage of vertical space when available
- Extended 10-year parts and compressor warranty available
- Unlike previous versions, water flow can be stopped while the unit is in a thermo-off state, saving on pump energy consumption. For twinned systems, both modules must be thermo-off to stop water flow
- A1 water-source units feature the Variable Evaporating Temperature (VET) technology enables the W-Series unit to raise the target evaporation temperature based on the difference between set point and return air temperature, saving energy

Benefits

CITY MULTI SYSTEMS AND GEOTHERMAL APPLICATIONS

CITY MULTI water-source systems, used in geothermal and other types of applications, work by taking heat or rejecting heat from/to the ground. Closed loop systems accomplish this by circulating water through a series of wells or loops that are installed in the ground, turning the ground into a large heat exchanger. Because the ground remains relatively unaffected by outdoor ambient temperatures, the loop runs at temperatures lower than ambient temperatures throughout the cooling season and higher than ambient temperatures throughout the heating season.

DOUBLE-HEAT RECOVERY

The double-heat recovery feature of the WR2–Series helps recover energy that would normally be rejected to the condensing water loop. First, within the system, energy is absorbed in units providing cooling. The energy is redirected by refrigerant to units that are in heating mode. Secondarily, energy can be recovered between systems through the water loop.

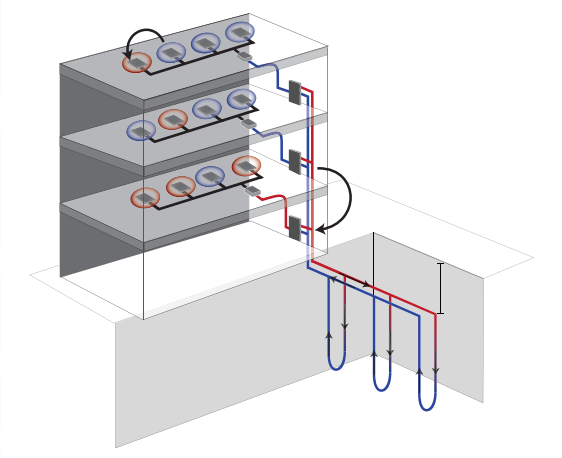

EXTENDED TEMPERATURE RANGE

WR2- and WY-Series CITY MULTI® water-source units can handle entering water temperatures down to 23° F (with the addition of glycol to the condenser water loop) in both heating and cooling mode allowing more possibilities for geothermal applications. Coupling the water-source units with a geothermal loop will not only provide the benefit of higher efficiencies by using a lower entering water temperature but will also provide all the benefit of an INVERTER-driven CITY MULTI system.

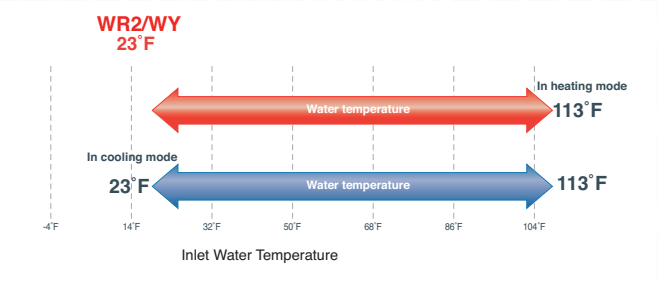

VARIABLE EVAPORATING TEMPERATURE (VET)

Variable Evaporating Temperature (VET) technology enables the outdoor unit to raise the target evaporation temperature based on the difference between set point and return air temperature.

- Once all indoor units are within 1.8° F of set point, the target evaporating temperature will rise in a linear fashion the closer the indoor unit gets to set point.
- Four levels of VET are available (32° F, 37° F, 41° F and 43° F), offering energy efficiency improvements of 25%–45%.

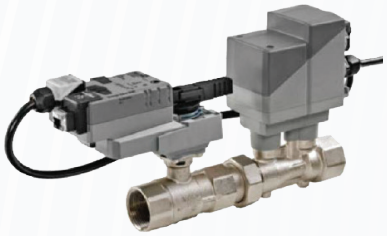

ELECTRONIC PRESSURE INDEPENDENT VALVE (ePIV)

- The ePIV receives a 0–10V input signal from the outdoor unit. This allows water flow to vary from nominal down to minimum, as demand is reduced
- The valve eliminates power input penalties and capacity loss due to lower design flow at full load operation, while saving on pump energy at reduced load conditions
- The valve contains a built-in ultrasonic flow meter with direct feedback into the valve actuator. This eliminates the balancing valve, along with labor to install it, for minimum and maximum flow and provides an integral flow switch function

LOW AMBIENT COOLING KIT

FULL COOLING PERFORMANCE IN EXTREME CONDITIONS

The specially designed wind deflectors will block unwanted wind that could impede operation and will allow full airflow when required at higher ambient temperatures or in heating mode. The assembly also provides a more efficient defrost cycle when the unit is operating in heating mode. Complete Low Ambient Kit requires hood with control damper assembly and wind deflectors.

PATENTED TECHNOLOGY

Low ambient hood (LAHN-1, LAHN-2, LAHN-3, and LAHN-4), Side Deflector (SWDN-1), and Rear Deflector (WDN-1, and WDN-2).

Allows system to operate at 100% cooling capacity at reduced outdoor temperatures:

- Y–Series Outdoor Units (down to –10º FDB Outdoor Temp.)
- R2–Series (includes H2i® R2-Series) Outdoor Units (down to –10º FDB Outdoor Temp.)

ADDITIONAL FEATURES

- Hood and wind deflectors constructed of 20 gauge hot-dipped galvanized G–90 steel
- Heavy-duty polyester-based powder paint finish
- Designed to work with both 208/230 and 460V 3-phase units
- NEMA 4X control box protects electrical components from the elements
- Kit easily connects to outdoor unit with plug-in electrical connections
- Wind deflectors easily install in place of existing wire guard

APPLYING TO MULTIPLE OUTDOOR UNITS

For outdoor units with multiple modules, a minimum 1-3/16" separation between the modules is recommended. If modules are placed more than 15" apart, more than one set of side wind deflectors may be needed. For multiple units or module sets placed in a row, only one side wind deflector is needed for each of the outside module coil surfaces.

COLD WEATHER SOLUTIONS

LOW AMBIENT COOLING (LAHN SERIES)

The specially designed wind deflectors block unwanted wind that could impede operation and allow full airflow when required at higher ambient temperatures or in heating mode. The wind deflectors also provide a more efficient defrost cycle when the unit is operating in heating mode. The complete Low Ambient Kit requires a hood with a control damper assembly and wind deflectors. With the addition of wind deflectors, CITY MULTI® Y-Series and R2-Series outdoor units feature 100% cooling capacity at outdoor temperatures down to -10° F. The wind deflector kit easily installs in the place of the existing wire guard, and the hood connects to the outdoor unit with plug-in electrical connections.

HAIL/SNOW GUARDS (SGN SERIES)

Designed to protect the outdoor unit coil surfaces from hail damage or snow buildup in severe climates. Made of 20-gauge, hot-dipped galvanized G-90 steel, the hail/snow guards feature a heavy-duty polyester-based powder paint finish to match the outdoor units. Using existing wire guard fasteners, the hail/snow guards are easily installed to the sides and rear of the unit in just minutes.

SGK-Series is compatible with N-Generation.

HAIL/SNOW HOODS (SHN AND SHK SERIES)

Hail/snow hoods are made to the same specifications as the hail/snow guards, and protect the outdoor unit fan guard from hail damage and snow buildup in severe climates. Using existing wire guard fasteners, the hail/snow hoods are easily installed to the sides and rear of the unit in just minutes. Hail/snow hoods are sold separately.

N-GENERATION PANEL HEATERS

Mitsubishi Electric panels heaters feature a heating coil controlled by the CITY MULTI® outdoor unit which prevents ice buildup. The panel heater is ideal for low temperature, high humidity environments where the outdoor unit will be operating in heating mode for an extended period of time. Panel heaters connect to the wiring connector located in the side channel of all CITY MULTI® N-Generation Y-Series and R2-Series modules. Pre-installed panel heaters are included on all N-Generation Hyper-heating models.

Note: Snow hoods and side/rear snow guards are also recommended for installations with panel heaters.

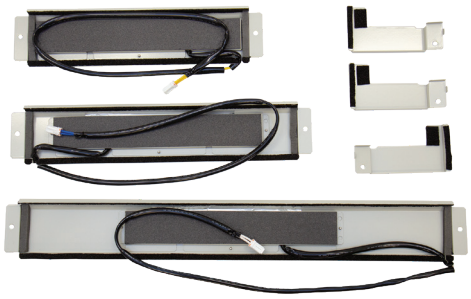

N-GENERATION PANEL HEATERS

COLD WEATHER STANDS AND SUPPORTS

Mitsubishi Electric features multiple configurations of stands and supports for S-Series, and CITY MULTI outdoor units. The sturdy stands and supports are designed to keep the outdoor unit above or off the ground and away from snow drifts in cold weather climates.

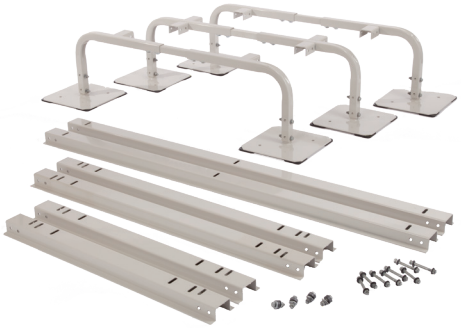

SUPERSTANDS

SuperStands provide secure mounting support and height above ground to keep CITY MULTI outdoor units out of normal snow accumulations. Available in 12″, 18″, and 24″ leg heights for varying mounting options. The stands lock together to make one continuous interlocked stand for almost any number of outdoor units.

- Rubber roof friendly
- Adjustable height in ¼″ and ½″ increments.
- U-Bars made from 11 gauge steel square tubing
- Available leg heights: 12″, 18″, and 24″

Outdoor unit must be mounted at least 12″ off the ground or 12″ above the highest average snow depth, whichever is greater. The outdoor unit may require additional mounting restraints depending on the mounting location.

LINEAR EXPANSION VALVE (LEV) KIT

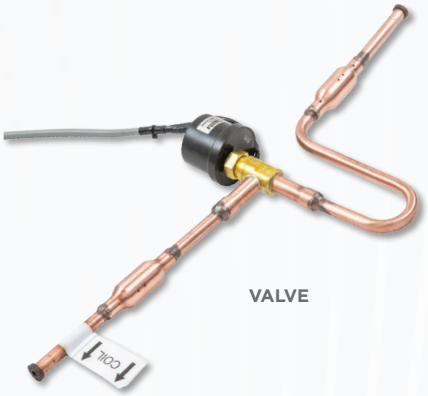

VALVE

- The LEV kit is an interface to connect CITY MULTI® outdoor units to air handlers produced by other manufacturers. These air handlers can be used with or without CITY MULTI indoor units
- The LEV kit is used to control room temperature or with a Dedicated Outdoor Air System (DOAS) for discharge temperature control
- The kit can be used for 0–10 VDC set point control from other devices
- The kit can be used with all CITY MULTI control options, including CN105 connections (return air temperature control only)

CONTROL BOX

LEV Assembly Model*	Capacity Code Setting [Ton]	Design Capacity Range [Btu/h]
LEV PAC-LV24AC-1	0.5, 0.7, 1, 1.25, 1.5, 2	4,800–24,000
LEV PAC-LV48AC-1	2.25, 2.5, 3, 4	24,000–48,000
LEV PAC-LV60AC-1	4.5, 5	48,000–60,000
LEV PAC-LV96AC-1	6, 8	60,000–96,000
LEV PAC-LV120AC-1	10	96,000–120,000
LEV PAC-LV96AC-1 (x2)	12, 14, 16	120,000–192,000
LEV PAC-LV120AC-1 (x2)	18, 20	192,000–240,000

**Control box assembly required (PAC-AH001-1)*

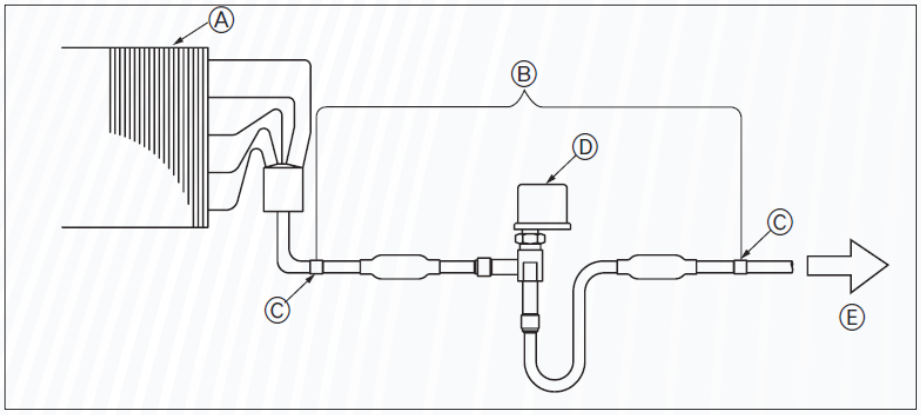

Ⓐ AHU Heat Exchanger (field supplied)
Ⓑ LEV Assembly
Ⓒ Brazing
Ⓓ LEV
Ⓔ To Outdoor Unit

S-SERIES ACCESSORIES

S-Series accessories feature the latest in high quality, durable products designed to complement outdoor units and to maintain peak performance and with limited maintenance.

ADV-1 AIR DEFLECTOR VERTICAL

The S-Series air deflector changes the direction of the discharged air. This permits multiple outdoor units to be positioned closer together in applications with limited space.

FRONT WIND BAFFLE

The specifically designed S-Series front wind baffles block unwanted wind that could impede operation by preventing the fan from counter-rotating in windy conditions. The addition of a front wind baffle to the cabinet of the outdoor unit also extends the cooling capacity. This component is constructed to be durable and low maintenance.

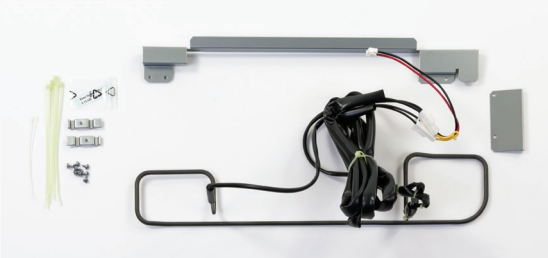

BASE PAN HEATER

S-Series base pan heaters feature a heating coil controlled by the outdoor unit which prevents ice buildup. The base pan heater is ideal for low temperature, high humidity environments where the outdoor unit will be operating in heating mode for an extended period of time.

AIR OUTLET GUIDE

The air outlet guide is used to force air out of the outdoor unit, either upward, downward or sideways (to the left or to the right). It can be used to prevent the outdoor unit from short cycling the exhaust air. It also enables the outdoor unit to be mounted closer to a wall or other outdoor units. Used on the S-Series only.

INDOOR UNITS

PKFY Wall-mounted/PLFY Ceiling Cassette/PMFY Ceiling Cassette /
PCFY Ceiling-suspended/PEFY Ceiling-concealed Ducted /
PFFY Floor-standing/PVFY Multi-position

UBER ADVANCED TECHNOLOGIES GROUP

PITTSBURGH, PA

INDOOR UNIT SHOWCASE

Complete Building Comfort Solutions

All models feature quiet operation, easy maintenance, and the ultimate in personalized comfort control. The chart below gives the capacity size for each model.

Capacity Code	Nominal Btu/h														
	4,000	5,000	6,000	8,000	12,000	15,000	18,000	24,000	27,000	30,000	36,000	48,000	54,000	72,000	96,000
Wall-Mounted PKFY-P-NLMU-E	●		●	●	●	●	●								
Wall-mounted PKFY–P–N-MU–E								●		●					
Ceiling Cassette (4-way) PLFY–EP–NEMU			●	●	●	●	●	●		●	●	●			
Ceiling Cassette (4-way) PLFY-P-NFMU		●		●	●	●	●								
Ceiling Cassette (1-way) PMFY–P–NBMU			●	●	●	●									
Ceiling-Suspended PCFY–P–NKMU						●		●		●	●				
Ceiling-Concealed (Ducted Low–Profile) PEFY–P–NMSU 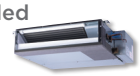			●	●	●	●	●	●							
Ceiling-Concealed (Ducted Medium-Static) PEFY–P–NMAU 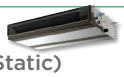			●	●	●	●	●	●	●	●	●	●	●		
Ceiling-Concealed (Ducted High-Static) PEFY–P–NMHU/NMHSU 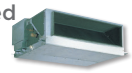						●	●	●	●	●	●	●	●	●	●
Floor-Standing (Exposed/ Concealed) PFFY–P–NEMU/NRMU			●	●	●	●	●	●							
Multi-Position PVFY–P–NAMU					●		●	●		●	●	●	●		
PWFY–P-NMU-E2-AU PWFY–P-NMU-E-BU											●			●	

PKFY (Wall-Mounted)

Elegant design and compact dimensions

Whatever the size or shape of your room, there's a PKFY wall-mounted unit that is just right for you. PKFY units mount high on the wall and blend beautifully into any space. Perfect for hotels, assisted living facilities, offices, residences and other applications where wall space is available.

- Ranges from 4,000 to 30,000 Btu/h
- Compact, lightweight and features a built-in wireless sensor for use with an optional wireless remote controller
- Extremely quiet: as low as 22 dB(A)
- Multiple fan speed settings.
- Multiple vane settings and swing setting adjust airflow in vertical directions
- Front panel opens easily—no tools are needed to gain access to the filter
- Refrigerant and drain piping can be connected from the rear, right, base, or left of the unit
- Condensate pump systems are available when gravity drainage is not available

Benefits

EASY FILTER CLEANING

The front grille hinges open easily—no tools are needed to gain quick access to the filter. The filter can be removed and cleaned as needed.

QUIET OPERATION

The unit incorporates a random-pitch fan to assure quiet operation. The optimal design of the airflow passage features a small fan diameter to allow for a compact installation. Thanks to practical casing configuration, airflow generated by the fan is uniformly distributed.

SUPERIOR AIR DISTRIBUTION

A user-selectable vane swing setting with the Smart ME and Simple MA remote controllers enhances air distribution in the conditioned space.

FLEXIBLE INSTALLATION

Refrigerant and drain piping can be connected from the rear, right, base, or left of the unit, providing much greater flexibility for piping and selecting an installation site.

PLFY (Four-Way Ceiling Cassette)

Bringing Adjustable airflow to meet your every need

The PLFY-Series four-way ceiling cassette provides exceptional performance and air coverage. Two styles are available: the PLFY-EP-NEMU and the PLFY-P-NFMU. Both models can be accessorized with installation trim panels (PLFY-ITP1 and PLFY-ITP2) to ensure a seamless integration into suspended ceilings.

PLFY–EP-NEMU

- 33″ x 33″ cabinet size
- Capacity range of 6,000 to 48,000 Btu/h
- Sound levels as low as 27 dB(A)
- Ventilation air connection (Second connection found in multifunction casement)
- High-efficiency filter option (MERV-10 requires multifunction casement)
- Branch ducting capability
- Four-speed fan settings
- Integrated condensate lift mechanism to provide up to 33-7/16″ of lift

PLFY-P-NFMU

- 22″ x 22″ cabinet size to fit in standard T-grid ceiling
- Capacity range of 5,000 to 18,000 Btu/h
- Sound levels as low as 29 dB(A)
- Ventilation air connection
- Three-speed fan settings
- Integrated condensate lift mechanism to provide up to 19-11/16″ of lift

HIGH PERFORMANCE AND VERSATILITY

The four-way ceiling cassette is compact and recesses easily into a ceiling space, so all you see is an attractive flush-mounted grille. The PLFY-EP-NEMU has a unit height of only 10-3/16″ or 11-3/4″, depending on the model. At 8-3/16″ in height and 22-7/16″ x 22-7/16″ width, the PLFY-NFMU makes satisfying even the tightest
of ceiling installations a possibility.

QUIET OPERATION

This powerful indoor unit is whisper-quiet, down to 27 dB(A) for the PLFY-EP-NEMU and 29 dB(A) for the PLFY-NFMU.

CUSTOMIZE THE AIRFLOW PATTERN TO MEET YOUR NEEDS

The different airflow options provide the best solution for a variety of room layouts and air-conditioning requirements. For extra versatility, you can select up to 72 airflow patterns with two- , three- , or four-way airflow.

4- , 3- , OR 2-WAY AIRFLOW

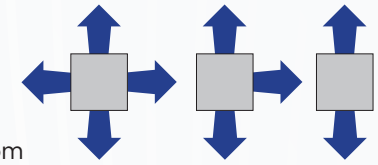

FIXED AIRFLOW DIRECTION PER VANE

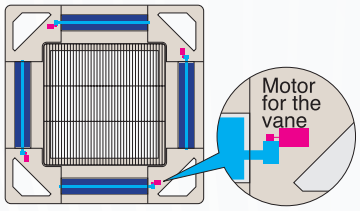

BUILT-IN CONDENSATE LIFT MECHANISM

The drain piping of the PLFY-EP-NEMU can be positioned anywhere up to 33-7/16″ from the ceiling's surface, allowing for long piping and versatility. The PLFY-NFMU model has a built-in pump that lifts condensate 20″ from the ceiling's surface. The unit recognizes if there is a pump failure and safeguards against leaks.

CORNER-POCKET DESIGN SIMPLIFIES MAINTENANCE AND INSTALLATION

PLFY-EP-NEMU allows access through the pockets equipped on each of four corners of the grille to complete installation, maintenance work, and height adjustment.

INDEPENDENT VANE MOTOR CONTROL

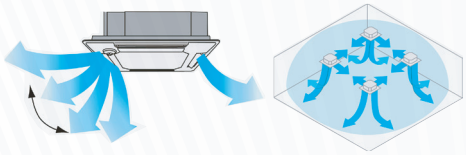

EASY MAINTENANCE, LONG-LIFE FILTER

The washable filter provides about 2,500 hours of use in a normal office environment before cleaning is needed.

i-see Sensor

The 3D i-see Sensor™ detects the number of occupants in a room and adjusts the temperature accordingly, making automatic energy-saving operation possible in places where the number of occupants frequently changes. Additionally, when the area is continuously unoccupied, the system switches to an enhanced power-saving mode.

- Detects occupant location
- Detects size, temperature, and movement of occupants (heat source). Once an occupant is detected, the angle of the indoor unit's vane(s) is automatically adjusted. Each vane can be independently set to "Direct Airflow" or "Indirect Airflow" according to user preference
- Highly accurate temperature detection
- The sensor can detect 1,856 points of surface temperature, rotating a full 360° in 3-minute intervals
  - This is a significant improvement over the previous version of the i-see Sensor, which had a single element and did not detect room occupants
- Room occupancy energy-saving mode
  - When the occupancy rate is approximately 30%, energy consumption is reduced by offsetting the temperature by ±2° F
- No occupancy energy-saving mode
  - When the 3D i-see Sensor detects that no one is in the room, and 60 minutes have elapsed, the room temperature is offset by ±4° F
- No occupancy Auto-OFF mode
  - When the room remains unoccupied for a user specified period of time, the indoor unit turns off automatically, providing even greater energy savings. The time period can be set, in 10-minute intervals, from 60 to 180 minutes

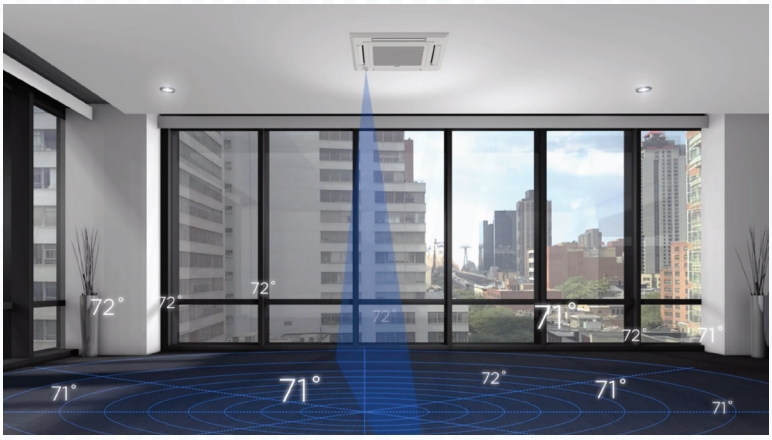

PMFY (One-Way Ceiling Cassette)

Compact and lightweight, perfect for office spaces with windows

The PMFY model is a ductless, one-way, ceiling cassette that moves air in one direction, and has the capability of introducing ventilation air. The PMFY can be accessorized with an installation trim panel (PMFY-ITP1) to ensure a seamless integration into suspended ceilings.

- The PMFY is available in 6,000, 8,000, 12,000 and 15,000 Btu/h
- Standardized cabinet size for all models: 31-31/32″
- Airflow control technology operates as low as 27 dB(A) for industry-leading quiet performance
- Integrated condensate lift mechanism to provide up to 23-5/8″ of lift
- Full unit access through front cover panel

Benefits

QUIET OPERATION

Specialized airflow control technology operates as low as 27 dB(A) for industry-leading sound performance.

BUILT-IN CONDENSATE LIFT MECHANISM

The drain pipe can be extended anywhere up to 23-5/8″ above the ceiling's surface.

EASY INSTALLATION AND MAINTENANCE

PMFY body size has been standardized for all models at 31-31/32″ for easier installation. With a height of only 9-1/16″, the profile is one of the smallest of all CITY MULTI ceiling models. This unit is one of the lightest available with a weight of only 31 pounds for the main unit and seven pounds for the panel.

DRAIN MECHANISM

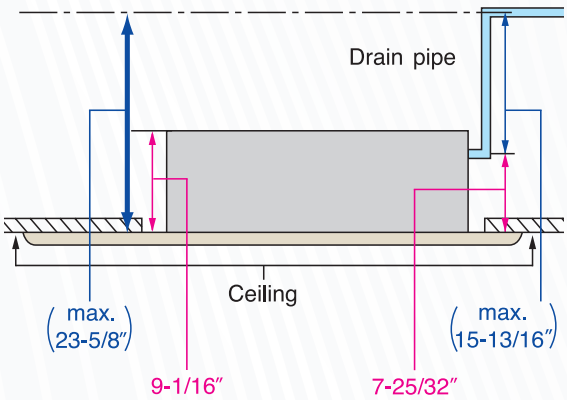

PCFY (Ceiling-Suspended)

Compact design ideal for classrooms, restaurants and stores

The PCFY model features powerful air throw to cover entire spaces quietly and efficiently.

- Available in 15,000, 24,000, 30,000, and 36,000 Btu/h capacities
- Auto-vane and wide-range outlet provides uniformly distributed conditioned air to all corners of the room
- Four-speed fan settings
- Accessory filters are available to increase filtration effectiveness
- Optional pump kit is available for condensate removal

Benefits

POWERFUL PERFORMANCE

The easy-to-install, ceiling-suspended unit delivers enough cold or hot air to make any space more comfortable. Manually adjusted, oversized swing louvers direct the airflow left or right, covering the entire space quietly and efficiently.

THE I-SEE T ACCESSORY

This amazing technology constantly monitors and adjusts temperatures for maximum comfort and efficiency.

- Measures infrared rays generated from surrounding walls and surface angles
- Rotates 90 degrees in five-second intervals
- Efficiently adjusts temperatures to ideal comfort levels for occupants

QUIET, EFFICIENT AIRFLOW

Appropriate airflow can be selected to enhance space conditioning efficiency and comfort while operating at a low sound level. PCFY's auto-vane and wide-range outlet swings the conditioned air and distributes it uniformly to all corners of the room.

EASY INSTALL

The PCFY's direct suspension allows installation on most ceiling surfaces quickly and securely using only suspension bolts and the durable attachment fixture. An optional pump kit is available to dispose of condensate.

PEFY (Ceiling-Concealed Ducted)

Flexible design allows elegant interior layout

The PEFY models are high-performance, ceiling-concealed, ducted indoor units. An excellent choice for office buildings, schools, hotels, assisted-living facilities and other applications where ceiling space is available.

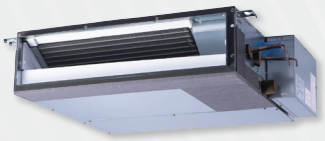

LOW PROFILE (NMSU)

- Provides up to 0.2″ external static pressure
- Extremely quiet, with sound ratings as low as 26 dB(A)
- Capacities range from 6,000 to 24,000 Btu/h
- Integrated condensate lift mechanism to provide up to 21-11/16″ of lift

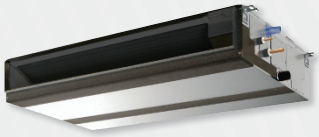

MEDIUM STATIC (NMAU)

- Provides up to 0.6″ external static pressure
- Extremely quiet, with sound ratings as low as 26 dB(A)
- Capacities range from 6,000 to 54,000 Btu/h
- Integrated condensate lift mechanism to provide up to 27-9/16″ of lift

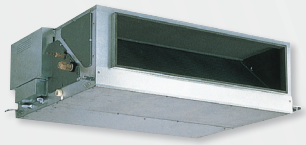

HIGH STATIC (NMHU-E2/NMHSU)

- Provides up to 1.00″ external static pressure
- Extremely quiet, with sound ratings as low as 36 dB(A)
- Capacities range from 15,000 to 96,000 Btu/h
- Integrated condensate lift mechanism to provide up to 27-9/16″ of lift
  (Note: Not applicable to P72 and P96 models)

KEY FEATURES

- External static pressure settings are adjustable to meet varying application conditions
- Choice of fan speed settings
- Side access to control panel
- Integrated condensate lift mechanism (low-static, mid-static and NMHU-E2 models)

CHOICE OF EXTERNAL STATIC PRESSURE

Additional external static pressure capacity provides flexibility for duct extension, branching, and air outlet configuration. The factory setting can be field-adjusted to match the installed ductwork for PEFY indoor units. The PEFY indoor unit is available in a low–profile option with up to 0.20″ W.G., medium static indoor unit up to 0.6 W.G. and a high–static option for up to 1.00″ W.G.

QUIET OPERATION

The specially designed centrifugal fan provides exceptionally quiet operation, even at high operating speeds.

OPERATING SOUND RANGE

	PEFY-P-NMAU	P06	P08	P12	P15	P18	P24	P27	P30	P36	P48	P54
Sound Level dB(A)	Fan Speed Low-High	26-29		28-34		28-35	29-36	30-38		32-41	35-44	36-45

	PEFY-P-NMSU	P06	P08	P12	P15	P18	P24
Sound Level dB(A)	Fan Speed Low-High	22-28	23-30	23-35	28-33	30-37	30-40

	PEFY-P-NMH(S)U	P15	P18	P24	P27	P30	P36	P48	P54	P72	P96
Sound Level dB(A)	Fan Speed Low-High	34-39		36-41	35-41	38-43	38-44			36-43	39-46

BUILT–IN CONDENSATE LIFT MECHANISM

The drain piping can be positioned anywhere up to 21-11/16″ for NMSU or 27-9/16″ for NMAU and NMH(S)U. from the ceiling's surface, allowing for long piping and versatility. A built-in safety switch halts operation if the pump experiences a problem or the drain becomes clogged, ensuring no water leaks occur.

COMPACT OPTIONS (PEFY–P–NMSU)

The PEFY–P–NMSU–E model is very compact, with a height of 7-7/8″. Standard features include brazed refrigerant connections, rear air return, and auto fan mode. The unit operates as low as 22 dB(A), and the control panel is located on the opposite side from other ducted models. This unit is an ideal choice for guest rooms in hotels, dormitories, assisted living centers or any application with tight vertical clearances and minimal duct work.

FILTER BOXES (M, L, H)

Designed for CITY MULTI® Ceiling-concealed Ducted Indoor Units

Low-Profile FBL1 boxes include 1″-thick pleated MERV 13 filter(s).
Medium-Static FBM2 boxes include 2″-thick pleated MERV 13 filter(s).
High-Static FBH4 boxes include 4″-thick pleated MERV 13 filter(s).

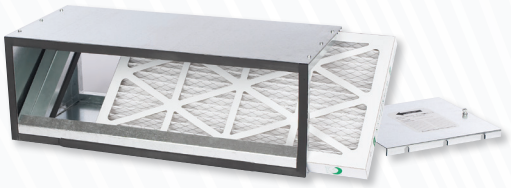

- Rated Class 2 under UL Standard 900
- Cabinet is constructed of non-insulated 20 gauge G-60 galvanized steel
- Foam gasket provides airtight connection to indoor unit and access door
- Return connection in rear easily field converted to bottom

Part Number	Used on CITY MULTI Models	Filters Included	Net Weight (lbs.)
FBL1-1	PEFY-P06, P08, P12-NMSU	(1)—13″ x 25″ x 1″	12
FBL1-2	PEFY-P15, P18-NMSU	(1)—12″ x 20″ x 1″ (1)—12″ x 14″ x 1″	15
FBL1-3	PEFY-P24-NMSU	(3)—12″ x 20″ x 1″	18

Part Number	Used on CITY MULTI Models	Filters Included	Net Weight (lbs.)
FBM2-1-A	PEFY-P06, P08, P12-NMAU	(1)—14″ x 25″ x 2″	20
FBM2-2-A	PEFY-P15, P18-NMAU	(1)—14″ x 20″ x 2″ (1)—14″ x 14″ x 2″	26
FBM2-3-A	PEFY-P24, P27, P30-NMAU	(2)—14″ x 20″ x 2″	32
FBM2-4-A	PEFY-P36, P48-NMAU	(2)—14″ x 20″ x 2″ (1)—14″ x 14″ x 2″	41
FBM2-5-A	PEFY-P54-NMAU	(3)—14″ x 20″ x 2″	46

Part Number	Used on CITY MULTI Models	Filters Included	Net Weight (lbs.)
FBH2-1	PEFY-P15, P18, P24-NMHU	(1)—20″ x 24″ x 2″	14
FBH2-2	PEFY-P27, P30-NMHU	(1)—20″ x 16″ x 2″, (1) - 20″ x 20″ x 2″	24
FBH2-3	PEFY-P36, P48 P54-NMHU	(2)—20″ x 20″ x 2″	27
FBH4-4	PEFY-P72, P96NMHSU	(2)—24″ x 24″ x 4″	40

PFFY (Floor-Standing)

Effectively use perimeter areas for space conditioning

PFFY floor-standing models are available as exposed or concealed indoor units. At less than nine inches deep, these units are easy to install in peripheral spaces, yet offer highly efficient cooling and heating performance. Their low operating sound and compact size make them ideal for hotel rooms, schools and office buildings.

PFFY-P-NRMU
Concealed Type

- PFFY-NRMU—designed for applications requiring a built-in, concealed, floor-standing unit
- The PFFY-P-NRMU unit can be field converted from top discharge to front discharge

PFFY-P-NEMU
Exposed Type

- PFFY-NEMU—exposed-type model, perfect for most applications and requires no finish work
- Available in 6,000, 8,000, 12,000, 15,000, 18,000 and 24,000 Btu/h
- Two-speed fan settings

Benefits

OPTIONAL MOUNTING FOR REMOTE CONTROLLER

PFFY units can house a remote controller in the top corner (under a cover panel). The remote controller can be mounted on the wall or in the PFFY unit.

INSTALLATION FLEXIBILITY

The PFFY-P-NRMU-E unit can be field converted from top discharge to front discharge to increase installation flexibility.

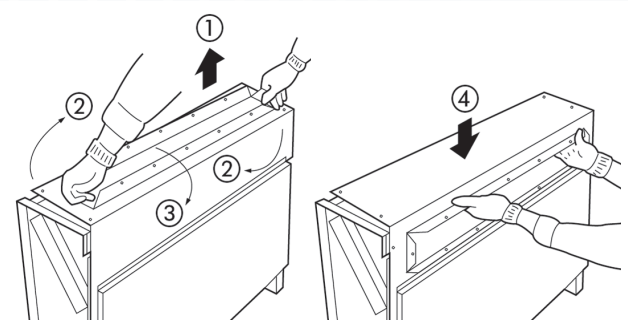

PVFY (Multi-Position Air Handler)

Ideal for closet, attic, or equipment room installations

PVFY multi-position air handlers can be connected to a system with other CITY MULTI® indoor units for complete system design flexibility. The multi-position design is suitable for any application, making it ideal for installation in a closet, attic, or an equipment room.

- Selectable external static pressure up to 0.80
- Reusable standard-size 1″ filter
- Side return available (P12-P24 only)
- Unique cabinet insulation design allows for no thermal penetration into the coil section
- Cabinet can be disassembled to install in very tight spaces
- Heavy gauge, high-gloss powder coat finish steel cabinets with 1″ fiberglass-free foam insulation (R-4.2 insulation value)
- Accessories available for various custom applications, including two-stage auxiliary heat, fan speed indication, humidifier control, and more
- Cabinet sections are embossed with fan, coil, and other components for easy identification and maintenance

VERTICAL AIRFLOW

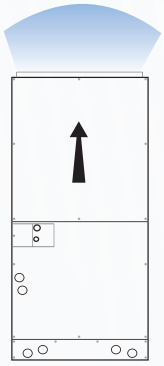

HORIZONTAL LEFT AIRFLOW

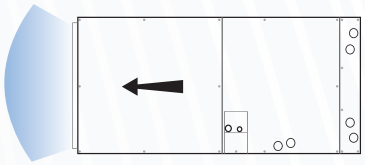

HORIZONTAL RIGHT AIRFLOW

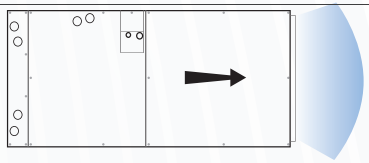

DOWNFLOW

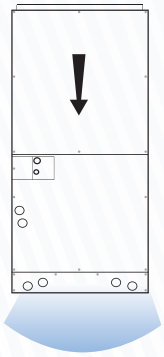

For downflow configurations, the CMA-1 is recommended for proper management of condensate to prevent water blowoff in certain conditions.

ELECTRIC HEATER KIT

An optional supplemental electric heat kit is available if an additional source of heat is required. Mounts directly to the air outlet connection of the multi-position air handler.

PWFY (Hydronic Heat Exchanger)

Heat and cool water, quickly and efficiently

The PWFY Hydronic Heat Exchanger is available in two configurations, the HEX (-AU) and the Booster (-BU). Each provides unique solutions to incorporate into an existing VRF system for an efficient means to heat and cool non potable water. The PWFY is a closed-circuit water heater that works with the Y-Series or R2-Series outdoor units.

Available Sizes:
36,000 and 72,000 Btu/h

PWFY-P36/72NMU-E2-AU

- Heats water to 113° F
- Hydronic heat exchanger transfers energy from refrigerant to water
- Can be used to recover waste heat from cooling operation to water when combined with any R2-Series, resulting in large energy savings
- Cools water to 41° F to be used for cooling outside air, cooling pool water, misting stations and more
- Applications include radiant heating, snow melting, reheating air, pre-heating hot water and more

Available Sizes:
36,000 Btu/h

PWFY–P36NMU–E–BU

- Heats water to 160° F
- Hydronic heat exchanger transfers energy from refrigerant to water
- Compatible with R2- and WR2-Series
- Can be used to recover waste heat from cooling operation to water, resulting in large energy savings
- Includes R134A compressor circuit for boosting water temperature
- Applications include radiant heating, hot water preheating, snow melting, reheating air, warming pools, and more

SHARP
DELL
DELL

VENTILATION

PremiSys® DOAS (Dedicated Outside Air System)
Lossnay® ERV (Energy Recovery Ventilator)

UBER ADVANCED TECHNOLOGIES GROUP

PITTSBURGH, PA

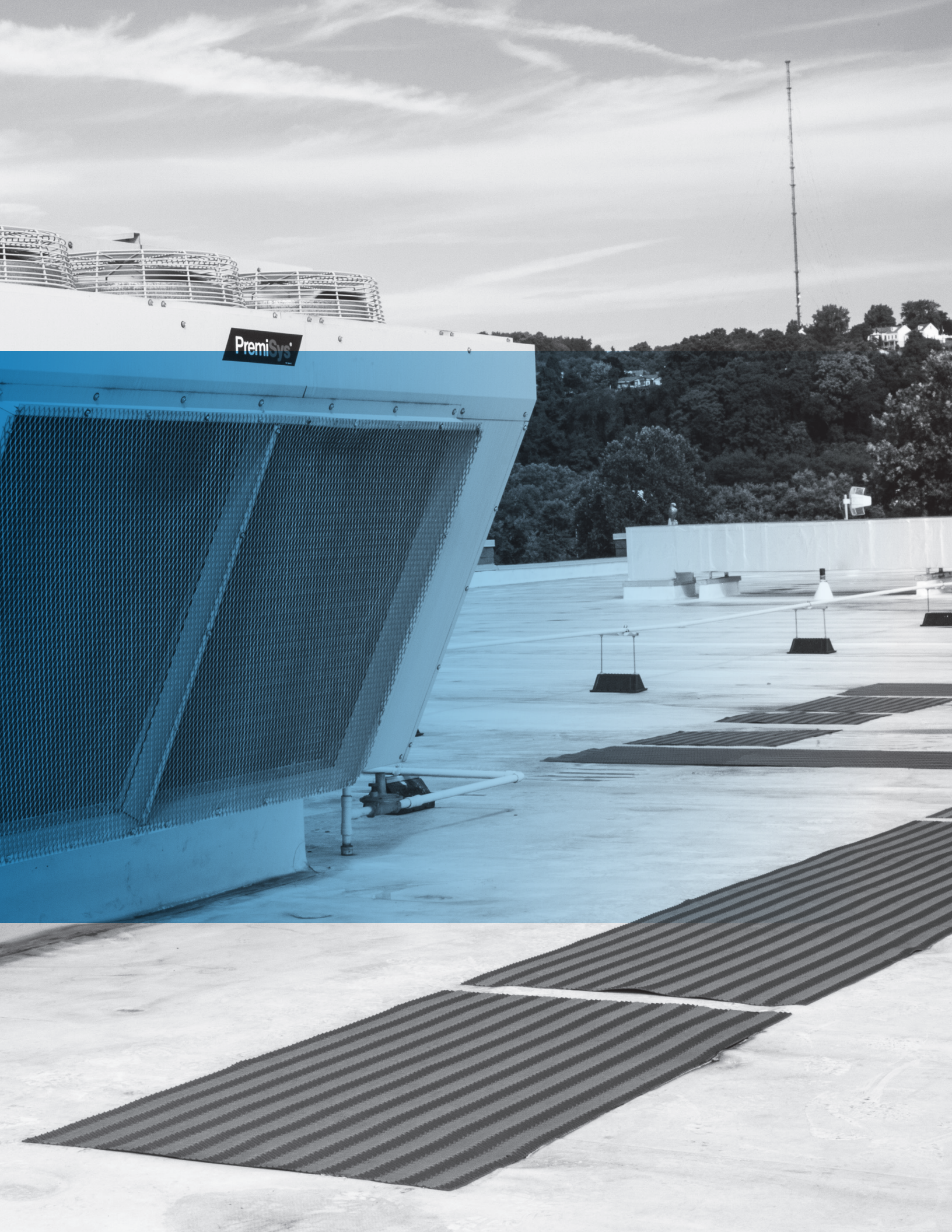
PremiSys

PREMISYS® DEDICATED OUTDOOR AIR SYSTEM

The PremiSys series of rooftop ventilation products is a premier solution for conditioning outdoor air for commercial buildings. Designed to handle 100% outdoor air with optional energy recovery, PremiSys products offer premium features ideal for handling ventilation air in variable refrigerant flow (VRF) applications.

The PremiSys models MP and MPE (with energy recovery), are pre-engineered to provide semi-custom flexibility while maintaining the quality, consistency, and value of a standardized product.

PremiSys® PREMIER VRF VENTILATION SOLUTIONS

- New Inverter Compressor option available:
  MP-1 and MPE-1: 5-15 tons
  MP-2 and MPE-2: 15-30 tons
  - Available at 208, 230 and 460V
  - Improves part load efficiency
  - Specifiable feature for precise temperature and humidity control
- New controls platform and web user interface for all MP, MPE and MPF models
- Carel Controller Platform Upgrades
  - Expanded points list
  - Web interface

Unit Size	Nominal Tonnage (tons)	Height	Width	Length	Intake	Condensing Section	Nominal Weight (lbs)	Outdoor Intake	Supply Discharge	Exhaust Discharge
MP-1	5 – 15	59	53	99	22	30	2,700	End	Bottom or Side	N/A
MP-2	15 – 30	73	68	109	27	30	4,500			
MP-4	20 – 43	90	68	156	22/27	30	6,400			
MP-5	30-70	99.5	96	185	52.5	NA[a]	7,950			Side
MPE-1	5 – 15	59	53	150	22	30	3,400			
MPE-2	15 – 30	73	68	163	27	30	5,100			
MPE-4	20 – 43	90	68	224	22/27	30	8,300			
MPE-5	30-70	99.5	96	263[b] 307[c]	47	NA[a]	10,450			

Notes:
*a Condensing section mounted on top of unit
*b Length with bottom return
*c Length with side return

The PremiSys series of rooftop ventilation products is a premier solution for conditioning outdoor air for commercial buildings. Designed to handle 100% outdoor air with energy recovery models, PremiSys products offer premium features ideal for handling ventilation air in VRF applications.

The PremiSys Fusion is the latest addition to the family of dedicated outdoor air systems. The MPF-1 and MPF-2 (split system with energy recovery) models are pre-engineered to provide semi-custom flexibility while maintaining the quality, consistency, and value of a standardized product. Take advantage of the split-system design to further enhance the flexibility of applying Mitsubishi Electric products to any building.

Unit Size	Nominal Tonnage (tons)	Height	Width	Length	Intake	Condensing Section	Nominal Weight (lbs)	Outdoor Intake	Supply Discharge	Exhaust Discharge
MPF-1	5 – 12	59	53	150	22	Remote	3,400	End	Bottom or Side	Side
MPF-2	10 – 20	73	68	163	27	Remote	5,100			

NEW! LOSSNAY® ENERGY RECOVERY VENTILATORS (ERVs)

Outdoor air solutions for improved indoor environmental quality

- Lossnay core
- Over 50% enthalpy exchange efficiency
- Four fan speeds offering a wide range of airflow variations, from small to large volume
- Independent control of supply and exhaust fans
- M-NET connectivity for use with CITY MULTI® central controllers and BMS interfaces
- Sound pressure level: maximum sound level 40.5 dB(A)
- Three ventilation modes: Auto, Bypass, Heat Recovery
- DC motor requiring less than 1W/CFM for all fan speeds

Benefits

INTERLOCK

Networking systems with Mitsubishi Electric air conditioners has never been easier. The M-NET adapter comes standard, and there is no need to purchase additional parts. Systems can be assembled simply and logically, reducing construction time and keeping initial costs low.

SYSTEM COMPATIBILITY

The LGH-F-RVX series is fully compatible with our controls network, further increasing the scope of total system management.

MULTI-FUNCTION LCD REMOTE CONTROLLER

The compact and attractive remote controller with a liquid crystal display is designed for easy visibility.

- ON/OFF, Run mode, and Ventilation mode
- Filter Maintenance Display
- Controls up to 15 Lossnay units in a single group
- Night Purge
- Timer Operations

BYPASS VENTILATION STANDARD

Lossnay models offer three ventilation modes:

- Energy Recovery—Heat Exchange
- Bypass—No Exchange
- Automatic—Heat Exchange/Bypass

With conventional ERVs, bypass ventilation was impossible without attaching additional dampers and adapters. With the LGH-F-RVX series, however, this mode is available without the use of other parts. An automatic mode allows the system to select recovery or bypass as required. Mode selection is easy when interlocked with M-NET systems using the PZ-61DR-E remote controller, which is sold separately.

PZ-43SMF

PZ-61DR-E

DEDICATED OUTDOOR AIR SYSTEM (DOAS)

Provides preconditioned outdoor air

The award-winning PEFY–AF Dedicated Outdoor Air System comes in two configurations, the CFM and the CFMR. Both configurations offer high capacity coils that will condition incoming air, making it suitable for distribution to downstream fan coil units.

CFMR

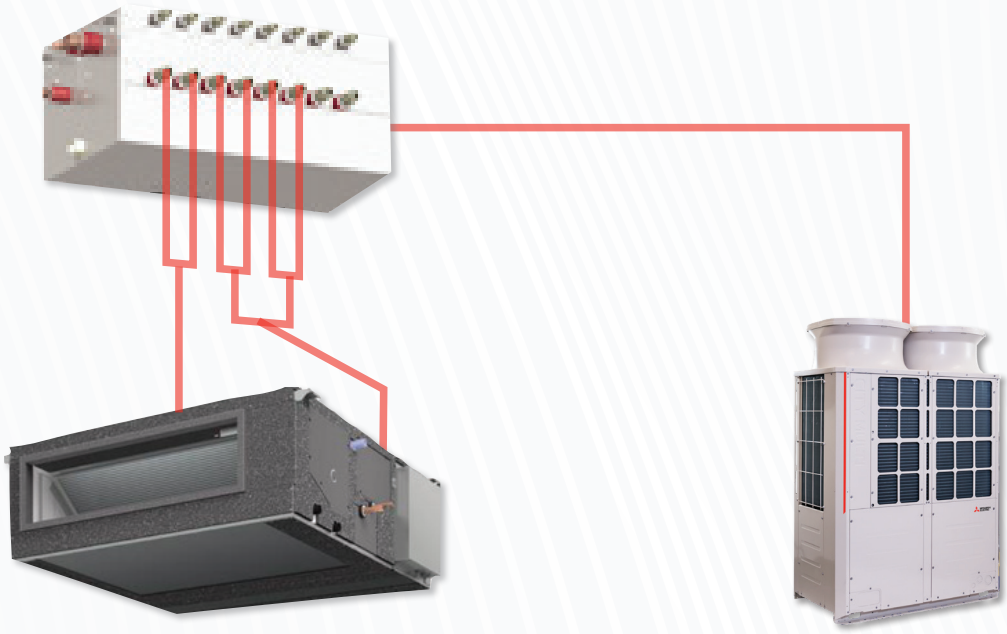

INDOOR UNIT
PEFY–AF1200 CFMR

OUTDOOR UNIT
R2-SERIES

PEFY - OA (Ducted Outside Air Unit)

Indoor air solutions for improved indoor environmental quality

The PEFY – OA is a high-performance indoor unit that improves comfort by bringing in fresh air that can be temperature controlled. Pre-treated air is then supplied to each zone, providing comfort to occupants.

The PEFY – OA is an ideal choice for office buildings, schools, hotels, assisted-living facilities and other applications where ceiling plenum space is available.

- Ideal for zoned ventilation applications
- Can be used in conjunction with standard indoor units
- Three modes of operation: cooling, heating, and fan only
- Available in 36,000, 48,000, 72,000, and 96,000 Btu/h capacities
- Supply air temperature control ranges from 50° FDB to 80° FDB in cooling mode and 63° FDB to 95° FDB in heating mode
- Operating temperature range from 63° FDB to 118° FDB in cooling mode and 14° FDB to 59° FDB in heating mode
- Multiple external static pressure set points from 0.602 to 1.00 in. W.G.
- Lineup ranges in airflow volume from 350 to 1,200 CFM
- High efficiency DC fan motor with three fan speed options
- Integrated condensate lift mechanism provides up to 27-9/16″ of lift
- Compatible with CITY MULTI outdoor units excluding S-Series (PUMY)
- Optional filter box available with MERV 13 filters

CONTROLLER FOR PEFY-OA DUCTED OUTSIDE AIR UNIT

- Easy-to-use MA remote controller
- Back-lit LCD screen
- Basic operations
  - On/Off
  - Preset temperature setting: Cool, Dry, Heat, and Auto
  - Fan speed setting
  - Vane setting
  - Automatic cooling/ heating operation
  - Timer: On/Off timer and Auto-off timer
  - Weekly timer
  - Energy saving: Automatic return to the preset temperature, setting the energy-saving operation schedule
  - Ventilation operation

PAR-30MAOA

INDOOR AIR QUALITY

The PEFY-OA indoor units provide conditioned outside air to a space, helping building owners, engineers and architects meet requirements for ventilation and increase indoor air quality.

QUIET OPERATION

The specially designed centrifugal fan provides exceptionally quiet operation, even at high operating speeds, down to 35 dB(A).

BUILT–IN CONDENSATE LIFT MECHANISM

The drain pipe can be positioned anywhere up to 27-9/16" from the bottom of the unit allowing for long piping and versatility. A built in safety switch halts operation if the pump experiences a problem or if the drain becomes clogged, ensuring no water leaks occur.

CHOICE OF EXTERNAL STATIC PRESSURE

Additional external static pressure capacity provides flexibility for duct extension, branching, and air outlet configurations. The factory setting can be field-adjusted to match installed ductwork for PEFY-OA indoor units. The PEFY-OA indoor units are available with up to 1.00" W.G. external static pressure.

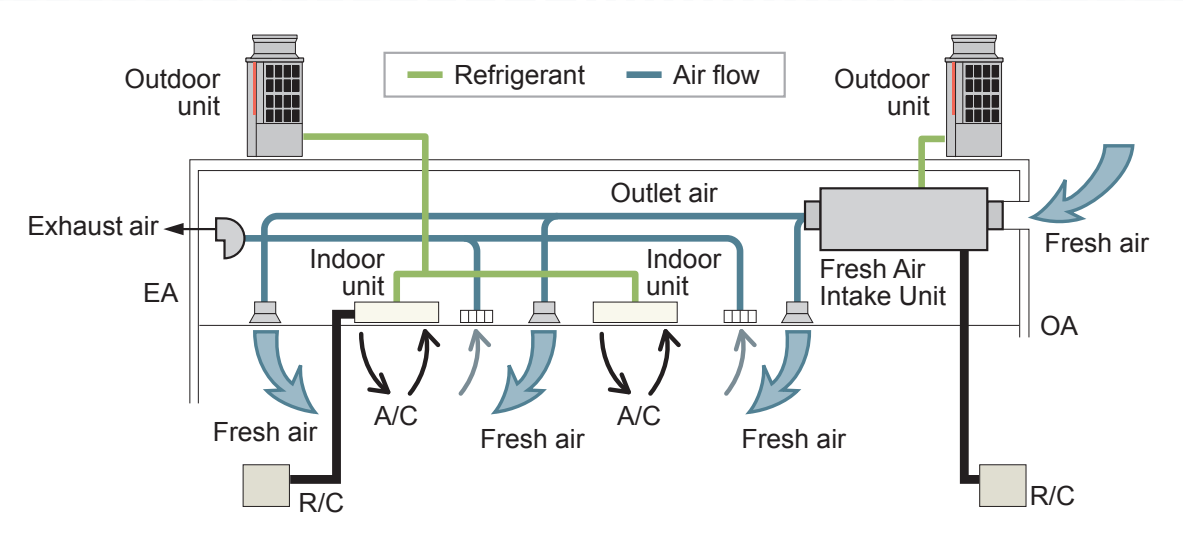

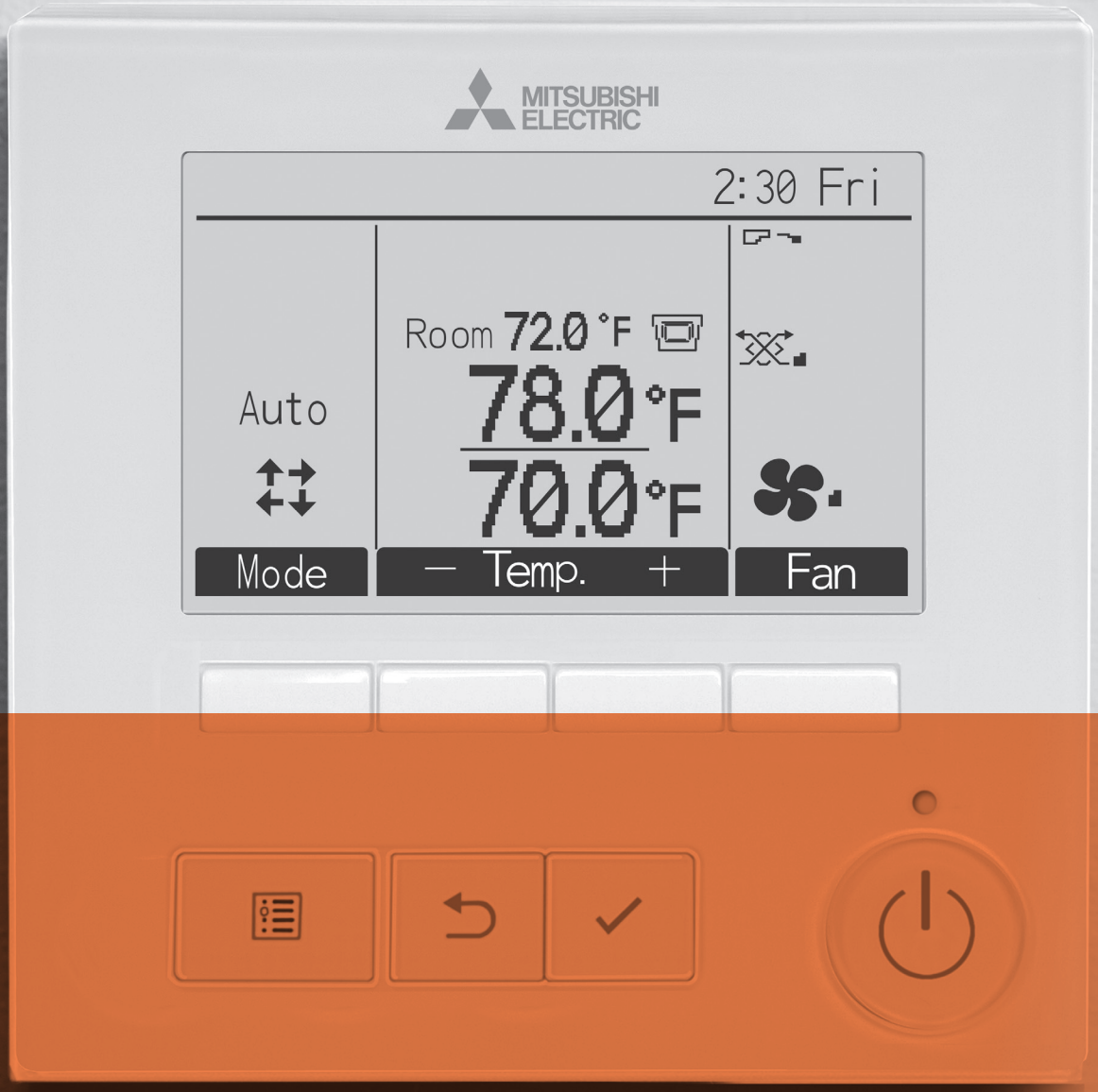

CONTROLS AND SOFTWARE SOLUTIONS

STUDIO GANG

CHICAGO, IL

CONTROLS NETWORK

Our CITY MULTI® Controls Network (CMCN) makes it easy to manage your building.

The Integrated Centralized Control Web (ICCW) manages up to 2,000 indoor units from a single networked PC or tablet. The ICCW puts individual, personalized comfort in the hands of the tenants and the building manager.

Benefits

FLEXIBLE DESIGN FOR CUSTOMIZED, INDIVIDUAL ZONE CONTROL

Building owners and engineers can select from a wide variety of remote controllers and other devices to satisfy the exact level of tenant control on a zone-by-zone basis, while providing the ultimate in personal comfort control. The versatility of the CMCN enables each building's controls network to address the specific design and tenant requirements, while providing unparalleled occupant comfort.

OPTIONAL EASY-TO-USE CONTROL VIA PC WEB BROWSER

From a web browser on a PC or tablet, the building manager can now monitor, operate and schedule the HVAC system through the central controller. Plus, the building manager can enable tenants to control their own individual zones via a personal web browser on their networked PC, tablet, or smartphone.

EASY INSTALLATION

The CMCN uses simple, non-polar, two-wire control connections. All components are daisy chained and added onto the M-NET communication bus. It all adds up to less labor and materials with quicker installation.

SINGLE-SOURCE CONTROL FOR UP TO 2,000 INDOOR UNITS

You can control up to 2,000 units with central controllers, empowering the building manager to control the HVAC system for multiple buildings in a business park, educational campus or retirement facility.

ENERGY ALLOCATION

A centralized controller network configured with the energy allocation option and watt-hour meter(s) can calculate the HVAC energy consumption relative to each indoor unit on a per-tenant basis and generate a CITY MULTI energy allocation per tenant. The Energy Allocation feature is available through the AE-200A/AE-50A/EW-50A centralized controllers.

SYSTEM INTEGRATION

Not only can our CMCN act as a standalone building management system, it can also integrate with existing systems via LonWorks® or BACnet®.

INTEGRATED CENTRALIZED CONTROL WEB

The Integrated Centralized Control Web (ICCW) enables the user to control multiple AE-200A/AE-50A /EW-50A centralized controllers and provide enhanced functions from any networked PC, tablet or smart phone. ICCW is capable of controlling up to 2,000 indoor units in conjunction with our centralized controllers.

ENERGY ALLOCATION

- Allocates the energy cost of the outdoor unit(s) power consumption to building tenants based on the capacity used by their indoor units
- Great for condos and multiple tenant spaces
- Requires a software license (LIC-CHARGE)

TABLET

FLOOR PLAN:

SCHEDULE:

ALL GROUPS:

HOME SCREEN (TABLET):

SMARTPHONE

Note: requires a license (LIC-PWEB)

AE-200A/AE-50A CENTRALIZED CONTROLLER

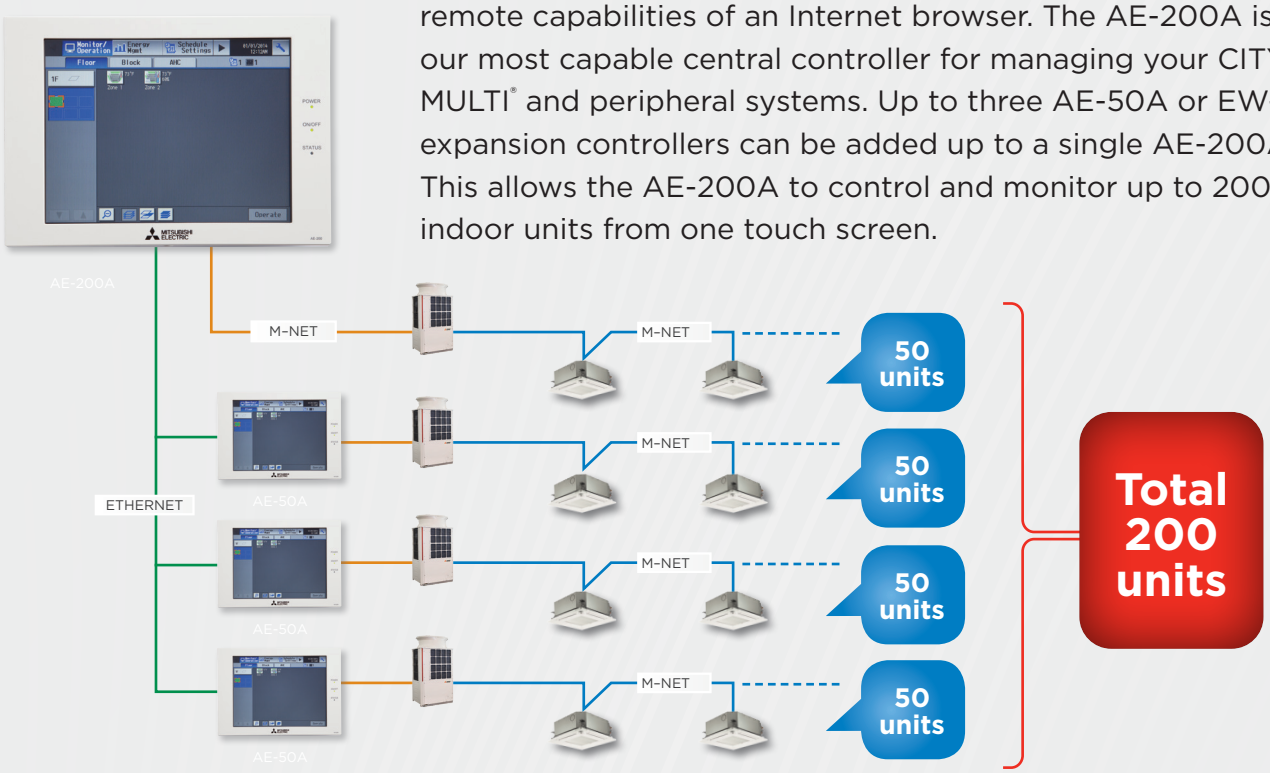

Combines the power of a touch-screen interface with the remote capabilities of an Internet browser. The AE-200A is our most capable central controller for managing your CITY MULTI® and peripheral systems. Up to three AE-50A or EW-50A expansion controllers can be added up to a single AE-200A. This allows the AE-200A to control and monitor up to 200 indoor units from one touch screen.

PROVIDE ASSISTANCE IN IDENTIFYING ENERGY SAVINGS BY COMPREHENSIVELY SHOWING THE ENERGY CONSUMPTION OF HVAC EQUIPMENT

Energy consumption of HVAC equipment by individual area is displayed graphically on the controller's interface. This enables comparisons with the previous year's power consumption as well as provides a view to performance against electric usage targets. Floor layout is displayed on the 10.4" LCD touch panel which facilitates easier operation of HVAC equipment.

ESTABLISH THE OPTIMAL SYSTEM BASED ON THE SCALE OF YOUR FACILITY

The AE-200A allows a user to control up to 50 indoor units. The AE-200A can increase its control capabilities to a maximum of 200 indoor units with the addition of three AE-50A expansion controllers. A PC or tablet connection enables the control of more than 200 indoor units via the ICCW browser.

DUAL SET POINT

When the operation mode is set to Auto (dual set point), two preset temperatures can be set. Depending on the room temperature, the indoor unit will automatically operate in either the Cool or Heat mode to keep the room temperature within the preset range.

MONITOR AND OPERATE THE HOT WATER HEAT PUMP THROUGH THE ADDITION OF A PWFY

Centralized batch control with the PWFY is made possible through the use of an AE-200A/AE-50A.

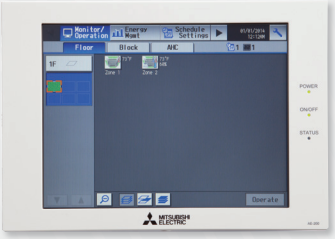

The AE-50A centralized controller can only expand an AE-200A controller, it cannot be used by itself. Three AE-50A controllers can expand an AE-200A to monitor 200 indoor units. It features advanced functionality with expanded monitoring, control, dual set point and trending abilities.

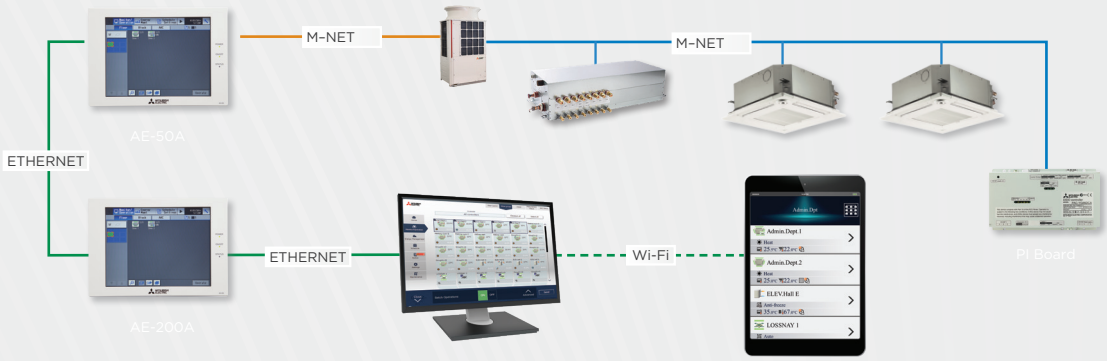

CONTROL SCREEN FOR POWER CONSUMPTION

Energy consumption of an applicable area can be displayed by the month, day, and/or hour. Energy consumption of two different units, groups and block, can be compared within the software. The energy consumption of the fan(s) can be displayed as well.

Energy consumption of the HVAC equipment is ranked and displayed by each unique area, thus visualizing high-load components within the system. In addition, a comparison of energy consumption alongside target electric energy usage is possible.

STANDARD FEATURES

Function	*Description*
Touch Screen	10.4″ high resolution color touch screen
Max No. of Indoor Units	Up to 200 indoor units can be controlled and monitored when three expansion controllers (AE-50A and/or EvW-50A) are networked together.
ON/OFF	On/Off operation for a single group and batch operation
Operation Mode	Setback/Cool/Dry/Auto (R2- and WR2-Series)/Fan/Heat
Temperature Setting	Supports single and dual set point operation with extended set temperature range
Fan Speed Setting	Hi/Mid–2/Mid–1 /Low/Auto (Available fan speed settings depending on indoor unit)
Airflow Direction Setting	Swing/Horizontal/Mid-0/Mid-1/Mid-2/Mid-3/Auto (settings vary depending on indoor unit model)
Permit/Prohibit Function	Individual prohibit operations for each remote controller function (ON/OFF, Set Temperature, Operation Mode and Filter Reset)
Indoor Return Air Tempera-ture	Displays the measured return air temperature from each group
Error Indication	Displays a four-digit code and the affected unit address
Test Run Function	Allows indoor units to operate in test mode
Ventilation Interlock	Allows the group to be interlocked with Lossnay unit
Schedule Operation	Annual, Weekly, and Today schedules
External Input/Output	Inputs: Level Signal—Batch Start/Stop, Batch Emergency Stop Outputs: Start/Stop Status, Error/Normal Status
Power Supply	Built-in
Dimensions—(H x W x D)	7-27/32″ x 11-5/32″ x 2-17/32″

AEW-50A CENTRALIZED CONTROLLER

The EW-50A centralized controller is a web browser-only centralized controller for managing CITY MULTI® and peripheral systems. The EW-50A can also connect to an AE-200A over Ethernet to expand it's monitoring capability to up to 200 indoor units when three EW-50A units are used. The EW-50A features advanced functionality with expanded monitoring, control, dual set point and trending abilities.

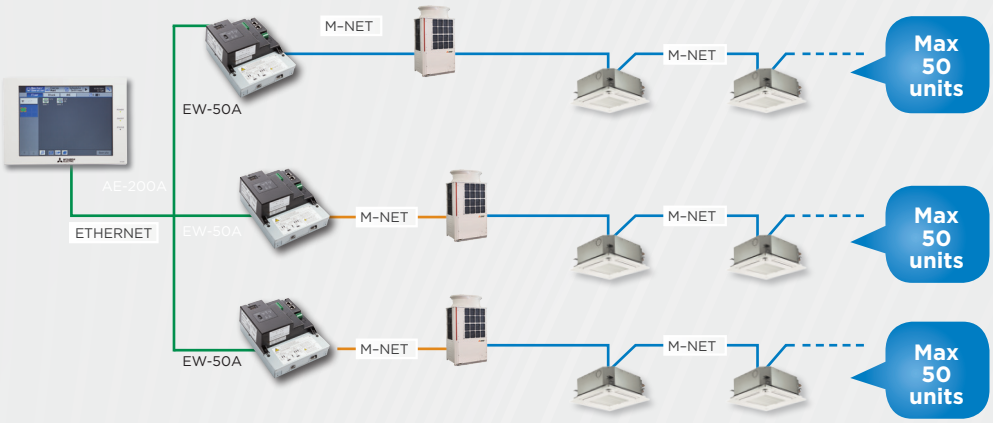

STANDARD FEATURES

FUNCTION	DESCRIPTION
Max No. of Indoor Units	Up to 50 indoor units can be controlled and monitored
ON/OFF	On/Off operation for a single group and batch operation
Operation Mode	Setback /Cool/Dry/Auto (R2- and WR2-Series)/Fan/Heat
Function	Hold (temporarily disables schedules)/Initial setting/Operation data back-up
Displays	CITY MULTI compressor speed and hi/low pressure/AdvancedHVAC Controller (DC-AIO) input/output status/ Space temperature and humidity (from SmartME or AI controller)/Error code (four-digit code and the affected unit address)/Unoccupied setback temperature range/Occupancy and brightness status from the SmartME remote controller
Temperature Setting	Supports single and dual set point operation with extended set temperature range
Fan Speed Setting	Hi/Mid–2/Mid–1/Low/Auto (Available fan speed settings depending on indoor unit)
Airflow Direction Setting	Swing/Horizontal/Mid-0/Mid-1/Mid-2/Mid-3/Auto (settings vary depending on indoor unit model)
Permit/Prohibit Function	Individual prohibit operations for each remote controller function include ON/OFF/Set Temperature/Fan speed and direction/Operation Mode/Filter Reset
Ventilation Interlock	Allows the group to be interlocked with Lossnay unit
Schedule Operation	Annual, Today, and Weekly schedules
External Input/Output	Inputs: Level Signal–Batch Start/Stop, Batch Emergency Stop Outputs: Start/Stop Status, Error/Normal Status (requires PAC-YG10HA)
Trending Data	Fan operation time/Thermo-on time/Set temperature/Room temperature/AI controller temperature and humidity
Power Supply	Built-in
Dimensions – (H x W x D)	8-4/16″ x 6-13/16″ x 3-10/16″

Customized individual zone control via a bright and easy-to-use touchscreen interface. The TC-24B is perfect for light commercial and residential applications.

STANDARD FEATURES

Function	Description
Max No. of Indoor Units	Up to 24 indoor units can be connected
ON/OFF	On/Off operation for a single group and batch operation
Operation Mode	Setback /Cool/Dry/Auto (R2- and WR2-Series)/Fan/Heat
Temperature Setting	Supports single and dual set point modes/Set temperature from 57˚ F – 87˚ F depending on operation mode and indoor unit
Fan Speed Setting	Hi/Mid-2/Mid-1 /Low/Auto (Available fan speed settings depending on indoor unit)
Airflow Direction Setting	Airflow angles: 100˚ – 80˚ – 60˚ – 40˚ and swing/Airflow direction settings vary depending on indoor unit model
Permit/Prohibit Function	Individual prohibit operations for each remote controller function (ON/OFF, Set Temperature, Operation Mode and Filter Reset)
Indoor Return Air Temperature	Displays the measured return air temperature from each group
Error Indication	Displays a four-digit code and the affected unit address
Ventilation Interlock	Allows the group to be interlocked with Lossnay unit
Schedule Operation	Weekly schedule can be set by groups based on operation pattern
External Input/Output	Inputs: Level Signal–Batch Start/Stop, Batch Emergency Stop Outputs: Start/Stop Status, Error/Normal Status
Power Supply	PAC-SC51KUA
Dimensions – (H x W x D)	4-3/4″ x 7-1/8″ x 1-3/16″

LICENSE OPTIONS FOR CENTRALIZED CONTROLLERS

Centralized controllers support operations that supersede simple control of the HVAC system and include system configuration, scheduling, batch operation, and malfunction monitoring through license options. These license options further expand the functionality of our centralized controller offerings.

OPTIONAL LICENSES

PERSONAL WEB BROWSER (LIC–PWEB)

Allows facility managers individual users to control their zone conditioning via personal networked PC, tablet or smart phone with or without remote controllers. Personal web browser is only supported on AE–200A, AE-50A, and EW-50A centralized controllers.

BACnet TCP/IP COMMUNICATION (LIC-BACNET)

Allows for BACnet® TCP/IP communication from a centralized controller to third-party building management software via an Ethernet connection. The BACnet license is only supported on the AE-200A, AE-50A, and EW-50A centralized controllers.

ENERGY ALLOCATION (LIC-CHARGE)

Provides the ability for the AE-200A to allocate the outdoor unit(s) power consumption to building tenants based on the capacity used by their indoor units. Note that there are additional components required to complete a full Energy Allocation installation.

	Part Number	Description	AE-200A	AE-50A	EW-50A
OPTIONAL LICENSES	LIC–CHARGE	Energy Allocation	•	•	•
	LIC–PWEB	Personal Web Browser	•	•	•
	LIC-BACNET	BACnet® TCP/IP communication	•	•	•
OPTIONAL ACCESSORIES	PAC-YG84UTB-J	Electric Box	•	•	
	PAC-YG86TK-J	Mounting Kit (for control panel)	•	•	
	PAC-YG82TB-J	Mounting Attachment (for wall surface)	•	•	
	PAC-YG72CWL-J	Surface cover with USB port	•	•	

PAC-YG82TB-J

PAC-YG84UTB-J

PAC-YG86TK-J

PAC-YG72CWL-J

PAC-YG60MCA INPUT/OUTPUT CONTROLLER

The PAC-YG60MCA Pulse Input (PI) Controller makes it possible to perform energy saving and energy allocation initiatives. A maximum of four (4) measurement meters (WHM, gas meter, water meter, and calorie meter) can be connected to the PI Controller and trended within the Centralized Controller. (Note: 24VDC power needs to be provided on-site.)

STANDARD FEATURES

FUNCTION	DESCRIPTION
Display	Displays measurement data via AE-200A, AE-50A, and EW-50A web browser
Monitor	Watt-hour meter, water meter, gas meter, calorimeter
Input	Quantity of 4 non-voltage pulse inputs
Fail-safe device	An internal capacitor will continue to track time for one week in the event of a power failure
Power Supply	24 VDC, 5 W, 0.2 A
Communication	M-NET
Dimensions—(H x W x D)	1-13/16″ x 7-7/8″ x 4-3/4″

PAC-YG66DCA & PAC-YG63MCA
INPUT/OUTPUT CONTROLLER

The PAC-YG66DCA Digital Input Digital Output (DIDO) controller makes it possible to control general-purpose equipment with an AE-200A, AE-50A, EW-50A, or TC-24B centralized controller. Connect up to six (6) pieces of equipment to the DIDO controller. The equipment can either be scheduled or interlocked with indoor units through the use of a centralized controller. (*Note: 24 VDC power is required on-site.)*

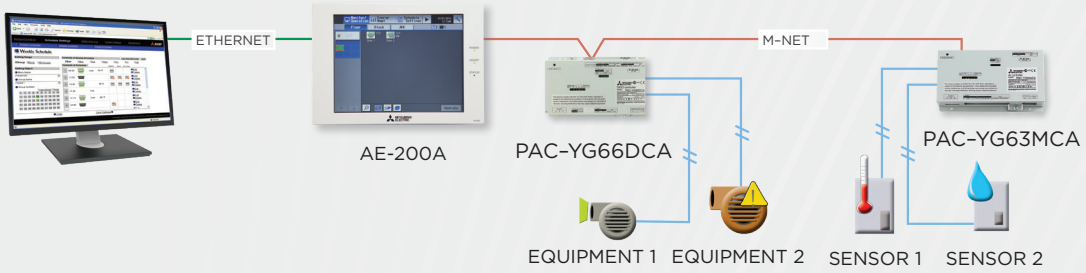

STANDARD FEATURES

FUNCTION	DESCRIPTION
Inputs	Qty two Digital Status Inputs and 2 Digital Error Inputs (Non-Voltage Contacts)
Outputs	Qty two Digital Outputs (Non-Voltage Relay Contact | Use only VDC with outputs
Monitor	Status, Fault | Requires AE-200A, AE-50A, EW-50A, or TC-24B Centralized Controller
Control	On/Off, Start/Stop, Enable/Disable | Requires AE-200A, AE-50A, EW-50A, or TC-24B Centralized Controller
Schedule Operation	Weekly schedule can be set by groups based on operation pattern Requires AE-200A, AE-50A, EW-50A, or TC-24B Centralized Controller
Interlock Function	Interlock M-NET devices and output contacts according to status of input contacts
Power Supply	24 VDC (5W plus loads)
Communication	M-NET
Dimensions—(H x W x D)	4-3/4" x 7-7/8" x 1-13/16"

The AI Controller makes it possible to monitor values measured by the temperature and humidity sensors connected to the AI Controller. The AI Controller has two input and two output channels and is required to be connected with an AE-200A, AE-50A, or EW-50A centralized controller. The user can trend measured data on a Web browser and set alarms to output via e-mail when data exceeds a preset upper or lower limit. (Note: 24 VDC power is required on-site.)

STANDARD FEATURES

FUNCTION	DESCRIPTION
Inputs	Qty two Analog Inputs (0/10 VDC, 4/20 mA, 1-5 VDC)
Outputs	Upper/lower limit alarm output (non-voltage contact)
Monitor	Temperature and/or Humidity Requires AE-200A, AE-50A or EW-50A centralized controller and field supplied sensor
Interlock Function	Interlock M-NET devices and output contacts according to measured values on inputs
Alarms	Generate alarm based on user defined high and low limits
Power Supply	24 VDC (5W)
Communication	M-NET
Dimensions—(H x W x D)	4-3/4" x 7-7/8" x 1-13/16"

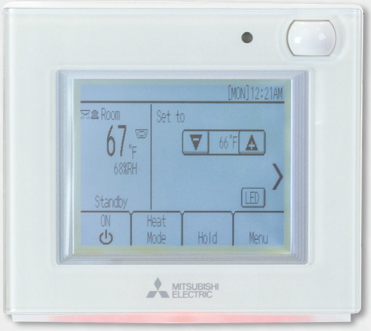

PAR-U01MEDU

SMART ME CONTROLLER®

- Intuitive backlit touch screen
- Group control up to 16 indoor units in a single zone
- Onboard temperature, humidity, occupancy, and brightness sensors
- Monitors third-party equipment through AdvancedHVAC controller
- Supports dual set point and setback functions
- Improved scheduling
- Color glow status indicator LED bar
- Dimensions (H x W x D): 4-3/4″ x 5-9/16″ x 1″

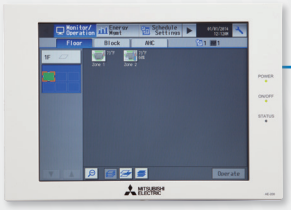

AE-200A

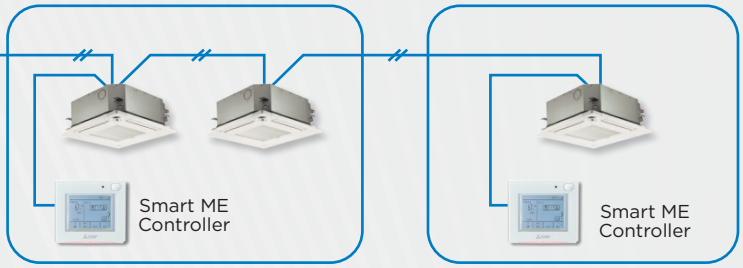

COLOR GLOW STATUS INDICATOR

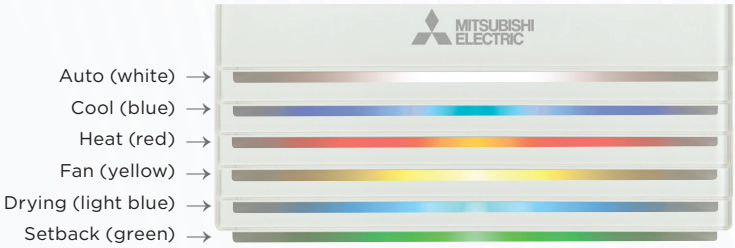

The LED bar indicates the operation status by lighting and blinking with different colors and brightness (High/Low), or by turning off. Multiple operation status indicators include blue (Cooling), light blue (Drying), yellow (Fan), white (Auto), green (Setback), red (Heating) and lime (Energy Save). Advanced settings are available for selecting desired color per mode, LED brightness (in conjunction with room brightness sensor), and temperature range indicator.

ENERGY SAVE FUNCTION

The Energy Save function reduces energy consumption during vacancy. The user can select a mode for the Energy Save function which is activated based on vacancy detection in a room, including the following:

- Thermo-off: Puts the unit into the Thermo-off state
- Set temperature offset: Offsets the set temperature
- Fan speed down: Sets the fan speed to Low
- ON/OFF: Turns off the unit
- Operation mode: Sets the operation mode to Setback

OCCUPANCY SENSOR

The built-in Occupancy Sensor is used to detect movement in a room. If the sensor detects no movement (or "vacancy") it will activate the selected Energy saving function mode. The Occupancy Sensor returns the system to original operating status after detecting movement. The user can adjust the away time and detection sensitivity threshold level for the Occupancy Sensor. Brightness can also be used in conjunction with motion to determine occupancy.

Full color touch panel customizable display

PAR-CT01MAU-SB

TOUCH MA

- Controls up to 16 indoor units
- Backlit LCD: full color, touch screen display includes 180 color patterns
- ON/OFF timer: turns on and off daily at a set time
- Fan speed settings
- Large icons for easy readability
- Bluetooth® app for users & installer
- Dimensions: 2-9/16″ x 4-23/32″ x 9/16″
- Customize display with customer logo or background colors

kumo cloud®

- Compatible with CITY MULTI® and M- and P-Series systems *without* a central controller
- Requires the Mitsubishi Electric Wireless Interface (PAC-USWHS002-WF-2)
- Easy to connect the device to your router using the kumo cloud app
- App compatible software platforms:
  - Apple iOS 8.0 or later
  - Android 4.1 or later
  - Fire OS 4.1 or later
- Intuitive settings for simplified use:
  1. Group units together
  2. Organize groups into sites
  3. Batch command units
- Error and filter status pop-up
- Advanced functions settings for M- and P-Series equipment

Download on the App Store

available at amazon appstore

GET IT ON Google play

WORKS WITH alexa

works with the Google Assistant

Works with IFTTT

Wired remote controller ideal for easy operation, convenience, and energy savings

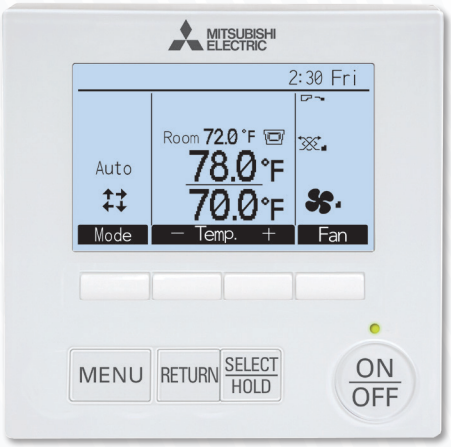

PAR-40MAAU

DELUXE MA

- Controls up to 16 zones
- Large easy-to-see backlit LCD with two display modes: Full or Basic
- Interlock and control Lossnay units
- Operation modes: Auto, Cool, Heat, Dry, Fan
- Fan speed settings
- Controls air direction (vane direction and ventilation)
- Dimensions: 4-3/4″ x 3/4″ x 4-3/4″
- Dual set point functionality
- Automatically adjust for Day Light Savings time
- Control i-see Sensor™ equipped cassettes indoor units

Easy-to-use remote for temperature and operation mode control

PAC-YT53CRAU

SIMPLE MA

- Controls up to 16 zones
- Backlit LCD
- Operation modes of Cool, Heat, Dry, Fan, Auto, Ventilation, Setback (depending on connected equipment)
- Fan speed settings
- Controls air direction (vane direction and ventilation)
- Dimensions: 2-3/4″ x 1-5/8″ x 4-3/4″
- Dual set point functionality

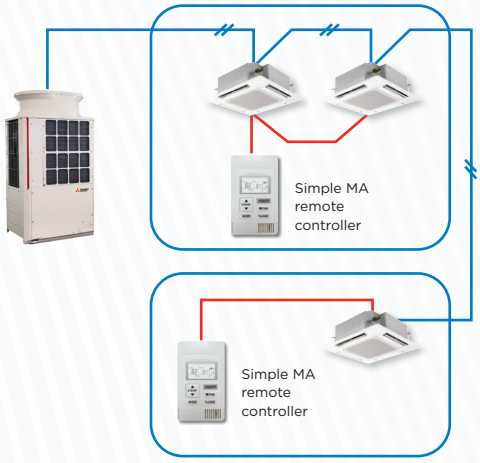

Easy-to-use hand-held remote for temperature and operation mode control for CITY MULTI® and P-Series systems

WIRELESS MA REMOTE CONTROLLER AND MA RECEIVER

PAR-FL32MA

- Hand-held wireless remote control of up to 16 indoor units
- Operation modes of Cool, Heat, Dry, Fan, Auto, Ventilation
- Fan speed, airflow direction settings
- Compatible with P-Series and CITY MULTI systems
- Requires PAR-FA32MA Wireless Receiver. (Built-in as standard on PKFY models)
- Dimensions — Remote: 2-5/16″ x 3/4″ x 5-1/4″
  Receiver: 2-3/4″ x 7/8″ x 4-12/16″

The CMCN supports integration with Building Management Systems (BMS) via LonWorks® and BACnet®

The Mitsubishi Electric LonWorks interface, LMAP04U, supports up to 50 indoor units with a variety of network variables on a per indoor unit basis. Input variables include, but are not limited to: On/Off, Operation Mode, Fan Speed, Prohibit Remote Controller, and Filter Sign Reset. Output variables include but are not limited to: Model Size, Alarm State, Error Code, and Error Address.

LonWorks

- Up to 50 units (CITY MULTI®, M-Series, P-Series and/or Lossnay) can be connected with one LonWorks interface
- Operation/Setting: Request On/Off, Set Point, Request Lossnay Mode, Request Fan Speed, Request Local Prohibit On/Off and Set Point, Request Forced Thermostat Off, Filter Sign Reset, Time Stamp, Request Limit Temperature Setting Range, Request Simplified Locking
- Features a built-in power supply (208/230 VAC)
- Dimensions: 13-7/16″ x 14-3/16″ x 2-3/8″

The AE-200A/AE-50A/EW-50A centralized controllers are BTL (BACnet Testing Laboratories) listed, demonstrating their compliance with ASHRAE standards and their compatibility with building management systems supporting the BACnet TCP/IP communication protocol.

BACnet® LICENSE

- Connect up to 50 indoor units per licensed centralized controller
- Supports the monitoring and operation of CITY MULTI indoor units, M- and P-Series indoor units (requires additional adapter), and Lossnay® ERV units
- BACnet TCP/IP Ethernet connection only

See page 64 for licensing centralized controllers

BUILDING CONNECT+

A cloud-based integration solution that seamlessly connects CITY MULTI® VRF and third-party equipment under one simple-to-use interface

Building Connect+ is a cloud based ready to use platform to monitor and control your CITY MULTI and third party equipment. Seamlessly connect up to 50 VRF indoor units, 5 BACnet devices and 8 other pieces of equipment using digital I/O. Remote connectivity allows you to view any number of Building Connect+ installations without the need for additional licenses or equipment.

This Contractor focused integration package reduces initial costs and commissioning time through the use of a pre-programmed local broker and web based portal. Standard user friendly features include user management, alarming, scheduling, trend builder and a cloud based data hub. Pre-programmed applications like auto-changeover make this turnkey solution the simple and easy way to monitor a complete HVAC system.

BUILDING
CONNECT+

FEATURES AND BENEFITS

- Connect up to 50 indoor units per licensed centralized controller
- Out-of-the-box cloud-based intergration solution for controlling and monitoring CITY MULTI® equipment and third-party devices
- Connect multiple installations and users across varied geographic locations
- Easy installation and commissioning because it does not require any special software or tools
- Full set of Mitsubishi Electric CITY MULTI maintenance tool data for monitoring, troubleshooting, and analytics.
- Multilevel user accounts to allow for different feature permissions and equipment access
- Weekly and Holiday scheduling of individual indoor units or the entire system for personal comfort and increased energy savings
- Data trending and downloading capabilities for system performance review and evaluation.
- Email notifications and display for all connected equipment.

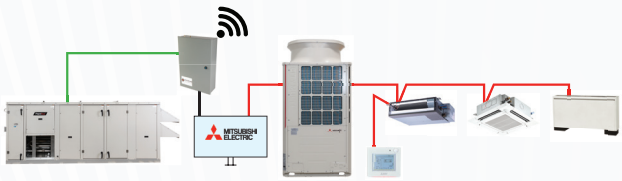

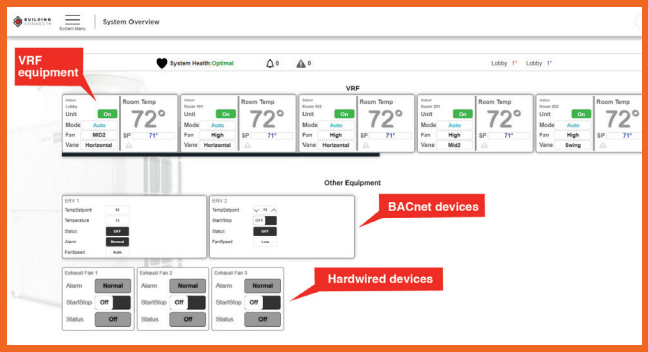

The configuration wizard auto-discovers the connected CITY MULTI® and BACnet® equipment. No programming is required. Configuration is through a simple built-in web portal for ease of use and expedited commissioning. No special software or licenses required

FEATURES AND BENEFITS (CONTINUED)

- Auto import functionality identifies and adds new units during startup and commissioning
- Auto Changeover application allows for users to enable and manage the settings.
- Local and remote user connectivity using computer, tablets, or mobile devices
- Global batch commands for streamlining operations
- Secure access with two-factor user authentication powered by Google Authenticator
- Intuitive graphical user interface for easy web connectivity and system configuration

DIAMOND CONTROLS™

A branded, bundled, and seamless building controls solution designed to extend the capabilities of your CITY MULTI® equipment.

Mitsubishi Electric's Diamond Controls is powered by the industry-leading Niagara Framework®, the industry's first software technology designed to integrate diverse building systems and devices into one seamless system. Niagara supports a wide range of protocols, including LonWorks®, BACnet®, Modbus®, oBIX and Internet standards. The Niagara Framework also includes integrated network management tools to support the design, configuration, installation and maintenance of interoperable networks.

DC-8000

The Mitsubishi Electric DC-8000 is an embedded controller/server platform that combines integrated control, supervision, data logging, alarming, scheduling and network management functions into a small, compact platform with network connectivity and web serving capabilities. The DC-8000 makes it possible to control and manage external devices over the network, presenting real-time information to users in web-based graphical views.

DCPro

The Mitsubishi Electric DCPro is a flexible network server for all connected DC-8000 stations. The DCPro provides efficient integration of standard open protocols. The DCPro creates a powerful network environment with comprehensive database management functionality, alarm management, and messaging services. DCPro can manage global control functions, support data passing over multiple networks, connect to enterprise-level software applications, and host multiple, simultaneous client workstations connected over a local network or the Internet.

CONTROLS SOLUTIONS

Controls Solutions is a group of industry experts located across the country who are ready to assist with every aspect of Mitsubishi Electric Cooling & Heating systems. By utilizing Controls Solutions, a building owner has peace of mind that the project will seamlessly move forward with minimal hiccups. With one company providing the equipment and the controls, project execution is much more efficient.

Controls Solutions offerings include:

- Project Supervision
- Owner Training
- System Start-up
- Project Training
- System Commissioning
- Design Support
- Retro-commissioning
- System Evaluation

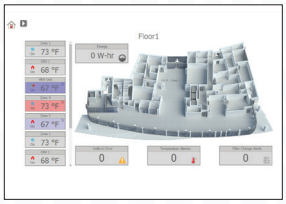

HIGH-RESOLUTION 3D GRAPHICS

Diamond Controls enables a new graphical user experience for variable refrigerant flow (VRF) zoning systems with the inclusion of high resolution three-dimensional floor plan graphics of your building.

DEMAND RESPONSE COMPLIANCE

Demand Response programs help utilities maintain grid reliability and enable customers to realize significant value. Diamond Controls provides Demand Response compliance to a building owner through OpenADR.

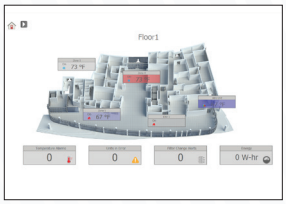

LIGHTING CONTROL

Diamond Controls can manage a building's lighting system through integration with third-party equipment. Lighting control provides a building manager the ability to set lighting schedules, which can be overridden by local switches if necessary.

CENTRAL PLANT CONTROL

Diamond Controls can monitor, control, and schedule a central plant to provide chilled or hot water for the building's needs without requiring additional third-party controls.

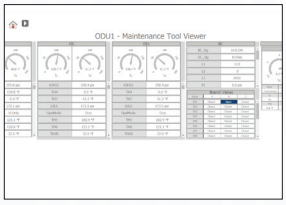

ADVANCED ALARMING

Diamond Controls advanced logic enables superior alarming capabilities for building awareness, as well as VRF zoning systems. The building owner can set up multiple alarm conditions ranging from simple out-of-range alarms to advanced condition alarms.

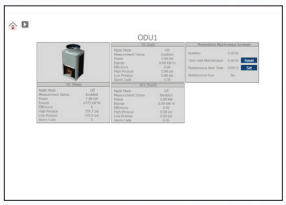

HVAC EQUIPMENT INTEGRATION

Diamond Controls can schedule, monitor, control, and integrate advanced logic within various HVAC manufacturers' equipment. Diamond Controls can also easily integrate into an existing building management system (BMS).

DIAMOND SYSTEM BUILDER™

Diamond System Builder is an interactive system layout tool providing a simple and efficient means of system design.

Diamond System Builder (DSB) helps users determine the cooling and heating output of selected equipment for project-specific conditions. The program has error indicators and built-in safeguards against exceeding limitations, assuring line lengths, maximum connected capacities, component selections, control schemes, etc. are within the system requirements.

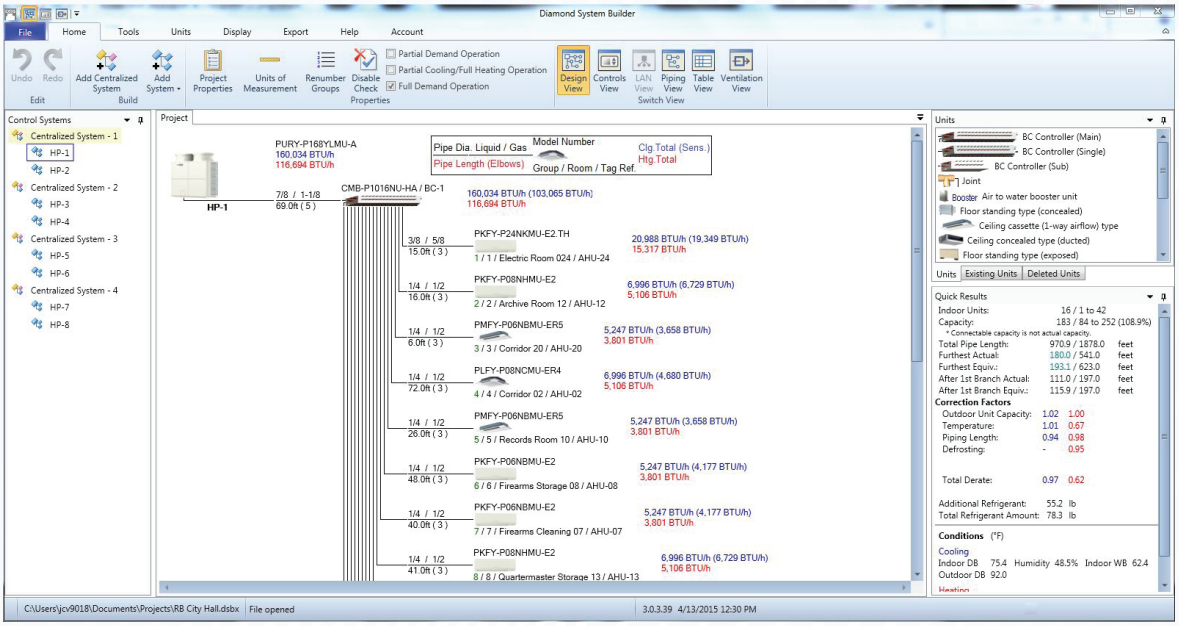

PROJECT PROPERTIES

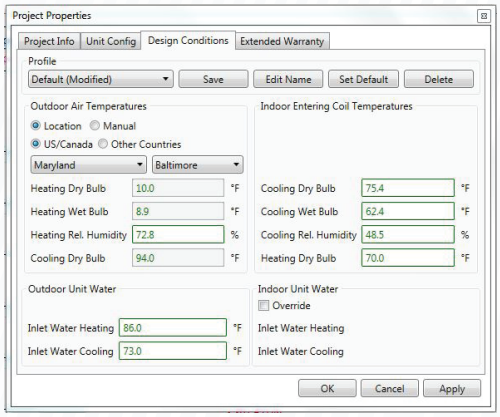

System design conditions, such as indoor and outdoor design conditions, are easily entered for both cooling and heating. Customer and project names can be entered to identify the job on the outputs.

DSB INTERFACE

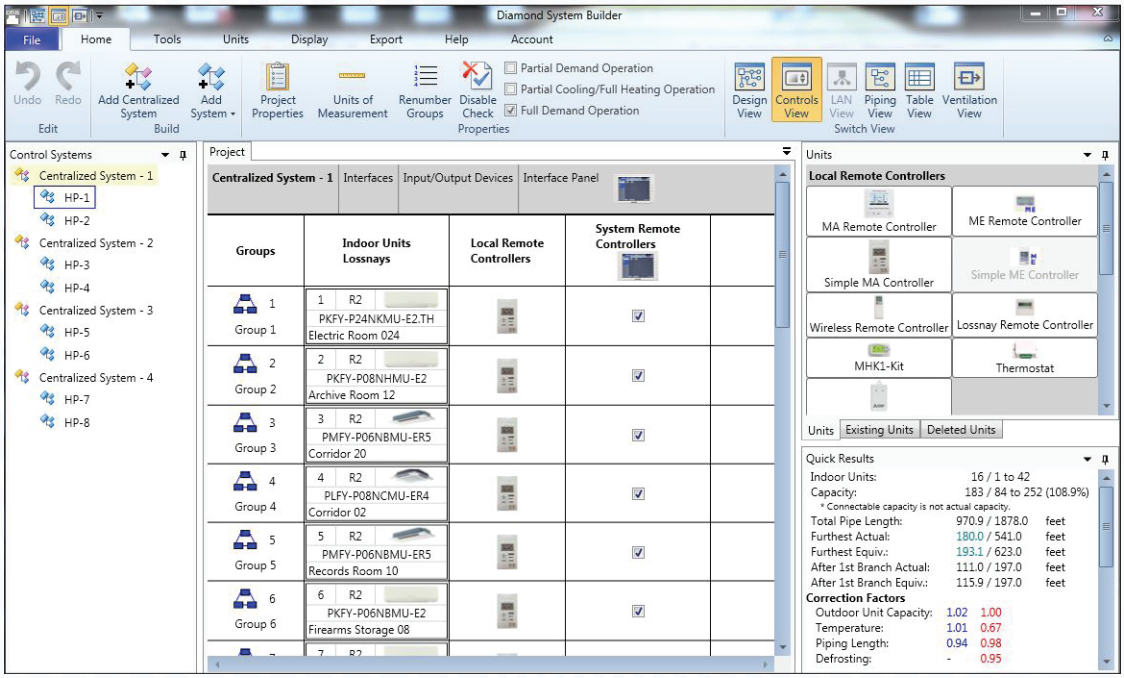

Optional functions to customize the system layout to your project are available, such as labeling groups with a room name, adding equipment tags to pieces of equipment, and giving each system a project-specific name. Other features, like a custom equipment schedule, submittal packages, and AutoCAD drawings are available once the system layout has been finalized.

REVIT AND AUTOCAD OUTPUTS

UNIVERSAL MAINTENANCE TOOL

Easy-to-use, Windows®-based Maintenance Tool software

The new Universal Maintenance Tool software is the fast and easy way to monitor operation of CITY MULTI®, M-Series and P-Series systems.* Upgrades to hardware and software allow for efficient access to system data, reducing time needed to determine operational status and troubleshoot system errors. Monitor temperature, pressure, Linear Expansion Valve (LEV) position, electrical data and much more. Information is updated every minute. View status of connected indoor units among many other capabilities.

Maintenance Tool also allows a user to record and save system data for trending and future error code analysis as well as extended warranty and troubleshooting purposes.

** separate cables required to access M- Series and P-Series data.*

PAC-USCMS-MN-1

MN CONVERTER

- MN-Converter features a sleek design that fits in the palm of your hand
- Efficiently pinpoint and troubleshoot system errors
- Easily access more system data in multiple ways
- Animated graphics-based system view enables easier on-site diagnosis and troubleshooting
- Directly connectable to a PC via USB cable
- Includes built-in SD CARD for capturing system operational data - after connecting to M-NET

Maintenance Tool data is automatically stored on the SD card, eliminating the need for a PC, until you want to review the data on the SD card.

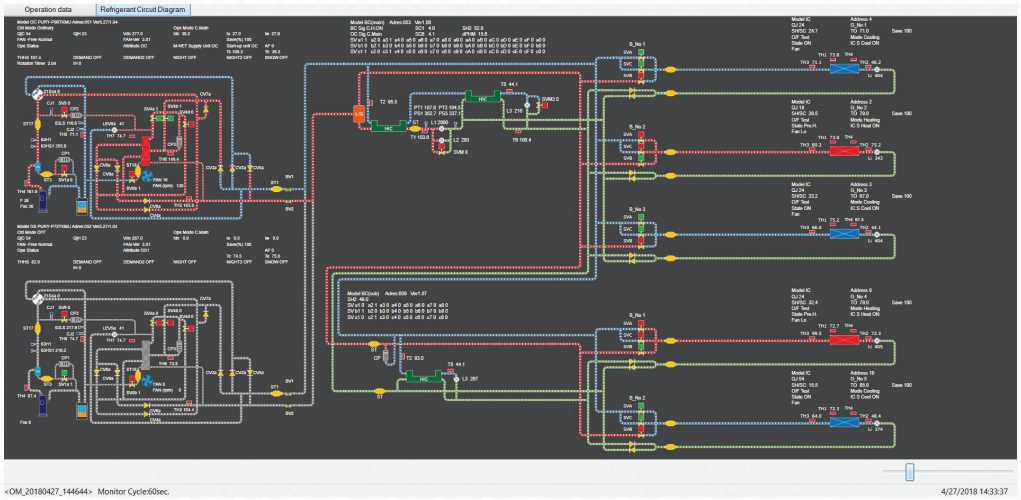

The Operation Status view displays the operational data for the connected system, including system pressures, temperatures, LEV position, compressor frequency, current operation mode, and more.

Uber Advanced Technologies Center
DELL
DELL

NOMAD HOTEL

LOS ANGELES, CA

SPECIFICATION TABLES OUTDOOR AND INDOOR

PURY-P** (T/Y) NU-A

SPECIFICATION			MODEL NAMES				
VOLTAGES		208V /230V	PURY-P72TNU-A (-BS)	PURY-P96TNU-A (-BS)	PURY-P120TNU-A (-BS)	PURY-P144TNU-A (-BS)	PURY-P168TNU-A (-BS)
		460V	PURY-P72YNU-A (-BS)	PURY-P96YNU-A (-BS)	PURY-P120YNU-A (-BS)	PURY-P144YNU-A (-BS)	PURY-P168YNU-A (-BS)
Power Source			3-phase 3-wire 208-230 V ±10% 60 Hz				
			3-phase 3-wire 460 V ±10% 60 Hz				
Capacity (Nominal)	Cooling	Btu/h	72,000	96,000	120,000	144,000	168,000
	Heating	Btu/h	80,000	108,000	135,000	160,000	188,000
Electrical Supply	MCA	A	24-22	33-30	43-40	52-48	61-57
			11	15	18	20	28
	MOP	A	40-35	50-45	70-60	80-70	100-90
			15	20	25	30	40
	SCCR	A	5				
	Recommended Fuse Size	A	30	40	50	60	70
			15	20	25	30	40
Fan	Type X Quantity		Propeller fan x 1	Propeller fan x 2	Propeller fan x 2	Propeller fan x 2	Propeller fan x 2
	Airflow Rate	CFM	6,000	7,400	8,300	9,550	14,850
	External Static Pressure		Selectable; 0, 0.12, 0.24, 0.32 in.WG; factory set to 0 in.WG				
Compressor	Type X Quantity		Inverter scroll hermetic compressor x 1				
	Operating Range		15% to 100%	15% to 100%	15% to 100%	15% to 100%	15% to 100%
	Lubricant		MEL32				
Refrigerant	Type		R410A				
External Finish			Pre-coated galvanized steel sheet (+powder coating for -BS type) <MUNSELL 5Y 8/1>				
Dimensions	Height	In.	71-5/8				
	Width		36-1/4	48-7/8	48-7/8	48-7/8	68-29/32
	Depth		29-5/32				
Net Weight		lbs.	483	576	598	646	739
			516	611	633	682	774
Sound Pressure Level (Measured in Anechoic Room)		dB(A)	56.5/58.0	58.5/60.0	60.0/62.0	65.0/65.5	62.5/66.5
Sound Pressure Level (Measured in Anechoic Room)		dB(A)	75.5/77.0	77.5/79.0	80.0/80.5	85.5/85.5	81.0/85.5
Protection Devices	High Pressure		High pressure sensor, High pressure switch at 4.15 MPa (601 psi)				
	Inverter Circuit (Compressor/Fan)		Over-heat protection, Over-current protection				
Refrigerant Pipe Dimensions	Liquid (High Pressure) Brazed)	In.	5/8 Brazed	3/4 Brazed	3/4 Brazed	7/8 Brazed	7/8 Brazed
	Gas (Low Pressure) (Brazed)		3/4 Brazed	7/8 Brazed	1-1/8 Brazed	1-1/8 Brazed	1-1/8 Brazed
Indoor Unit Connectable	Total capacity		50-150% of outdoor unit capacity				
	Model / Quantity		P05-P96/1-18	P05-P96/1-24	P05-P96/1-30	P05-P96/1-36	P05-P96/1-42
Guaranteed Operating Range *1	Cooling (Outdoor) *2		23-126°F (-5-52°C)				
	Heating (Outdoor) *3		-4-60°F (-20-15.5°C)				
Extended Operating Range *4	Heating (Outdoor)		-18-60°F (-28-15.5°C)				
Efficiency Ratings *5	EER (Ducted/Non-Ducted)		13.1 / 14.7	12.8 / 14.5	12.1 / 13.2	11.0 / 12.2	10.6 / 11.0
	IEER (Ducted/Non-Ducted)		23.8 / 29.2	25.5 / 31.9	23.3 / 28.8	23.1 / 28.7	21.3 / 25.8
	COP (Ducted/Non-Ducted)		3.76 / 4.09	3.88 / 4.14	3.61 / 4.01	3.43 / 3.84	3.30 / 3.80
	SCHE (Ducted/Non-Ducted)		25.9 / 25.5	23.5 / 28.3	25.3 / 29.1	24.8 / 27.7	24.7 / 28.3

NOTES:

Nominal cooling conditions (Test conditions are based on AHRI 1230) Indoor: 80°FD.B./67°FW.B. (26.7°CD.B./19.4°CW.B.), Outdoor: 95°FD.B. (35°CD.B.)

Nominal heating conditions (Test conditions are based on AHRI 1230) Indoor: 70°FD.B. (21.1°CD.B.), Outdoor: 47°FD.B./43°FW.B. (8.3°CD.B./6.1°CW.B.)

1. Harsh weather environments may demand performance enhancing equipment. Ask your Mitsubishi Electric representative for more details about your region.
2. For details on extended cooling operation range down to -10° F DB, see Low Ambient Kit Submittal.
3. When applying product below -4°F, consult your design engineer for cold climate application best practices, including the use of a backup source for heating.
4. Unit will continue to operate in extended operating range, but capacity is not guaranteed.
5. Efficiency ratings are based on AHRI 1230 test method

PURY-P** (T/Y) NU-A

SPECIFICATIONS			MODEL NAMES			
VOLTAGES		208V /230V	PURY-P192TSNU-A (-BS)	PURY-P216TSNU-A (-BS)	PURY-P240TSNU-A (-BS)	PURY-P264TSNU-A (-BS)
			With 2 PURY-P96TNU-A (-BS)	With 1 PURY-P120TNU-A (-BS) and 1 PURY-P96TNU-A (-BS)	With 2 PURY-P120TNU-A (-BS)	With 1 PURY-P144TNU-A (-BS) and 1 PURY-P120TNU-A (-BS)
		460V	PURY-P192YSNU-A (-BS)	PURY-P216YSNU-A (-BS)	PURY-P240YSNU-A (-BS)	PURY-P264YSNU-A (-BS)
			With 2 PURY-P96YNU-A (-BS)	With 1 PURY-P120YNU-A (-BS) and 1 PURY-P96YNU-A (-BS)	With 2 PURY-P120YNU-A (-BS)	With 1 PURY-P144YNU-A (-BS) and 1 PURY-P120YNU-A (-BS)
Power Source			3-phase 3-wire 208-230 V ±10% 60 Hz			
			3-phase 3-wire 460 V ±10% 60 Hz			
Capacity (Nominal)	Cooling	Btu/h	192,000	216,000	240,000	264,000
	Heating	Btu/h	215,000	243,000	270,000	295,000
Electrical Supply	MCA	A	Refer to: PURY-P96TNU-A (-BS)	Refer to: PURY-P120TNU-A (-BS) PURY-P96TNU-A (-BS)	Refer to: PURY-P120TNU-A (-BS)	Refer to: PURY-P144TNU-A (-BS) PURY-P120TNU-A (-BS)
	MOP	A				
	SCCR	A	PURY-P96YNU-A (-BS)	PURY-P120YNU-A (-BS) PURY-P96YNU-A (-BS)	PURY-P120YNU-A (-BS)	PURY-P144YNU-A (-BS) PURY-P120YNU-A (-BS)
	Recommended Fuse Size	A				
Fan	Type X Quantity					
	Airflow Rate	CFM				
	External Static Pressure					
Compressor	Type X Quantity					
	Operating Range		7.5% to 100%	7.5% to 100%	7.5% to 100%	7.5% to 100%
	Lubricant		Refer to: PURY-P96TNU-A (-BS)	Refer to: PURY-P120TNU-A (-BS) PURY-P96TNU-A (-BS)	Refer to: PURY-P120TNU-A (-BS)	Refer to: PURY-P144TNU-A (-BS) PURY-P120TNU-A (-BS)
Refrigerant	Type					
External Finish						
Dimensions	Height	In.				
	Width		PURY-P96YNU-A (-BS)	PURY-P120YNU-A (-BS) PURY-P96YNU-A (-BS)	PURY-P120YNU-A (-BS)	PURY-P144YNU-A (-BS) PURY-P120YNU-A (-BS)
	Depth					
Net Weight		lbs.				
Sound Pressure Level (Measured in Anechoic Room)		dB(A)	61.5/63.0	62.5/64.5	63.0/65.0	66.5/67.5
Sound Pressure Level (Measured in Anechoic Room)		dB(A)	80.5/82.0	82.0/83.0	83.0/83.5	87.0/87.0
Protection Devices	High Pressure		High pressure sensor, High pressure switch at 4.15 MPa (601 psi)			
	Inverter Circuit (Compressor/Fan)		Over-heat protection, Over-current protection			
Refrigerant Pipe Dimensions	Liquid (High Pressure) (Brazed)	In.	7/8 Brazed	7/8 Brazed (1-1/8 Brazed for the part that exceeds 65 m)	7/8 Brazed (1-1/8 Brazed for the part that exceeds 65 m)	1-1/8 Brazed
	Gas (Low Pressure) (Brazed)		1-1/8 Brazed	1-1/8 Brazed	1-3/8 Brazed	1-3/8 Brazed
Indoor Unit Connectable	Total capacity		50-150% of outdoor unit capacity			
	Model / Quantity		P05-P96/1-48			
Guaranteed Operating Range *1	Cooling (Outdoor) *2		23-126°F (-5-52°C)			
	Heating (Outdoor) *3		-4-60°F (-20-15.5°C)			
Extended Operating Range *4	Heating (Outdoor)		-18-60°F (-28-15.5°C)			
Efficiency Ratings *5	EER (Ducted/Non-Ducted)		11.9 / 13.5	11.6 / 13.0	11.2 / 11.7	10.7 / 11.3
	IEER (Ducted/Non-Ducted)		24.3 / 30.7	23.3 / 29.2	22.3 / 26.3	22.2 / 26.4
	COP (Ducted/Non-Ducted)		3.60 / 3.88	3.49 / 3.82	3.36 / 3.56	3.28 / 3.50
	SCHE (Ducted/Non-Ducted)		23.0 / 28.0	22.7 / 26.9	22.9 / 26.8	22.3 / 25.7

NOTES:

Nominal cooling conditions (Test conditions are based on AHRI 1230) Indoor: 80°FD.B./67°FW.B. (26.7°CD.B./19.4°CW.B.), Outdoor: 95°FD.B. (35°CD.B.)

Nominal heating conditions (Test conditions are based on AHRI 1230) Indoor: 70°FD.B. (21.1°CD.B.), Outdoor: 47°FD.B./43°FW.B. (8.3°CD.B./6.1°CW.B.)

Twinning kit is required for combining multiple individual outdoor units in the field for PURY-PT(Y)SNU combined systems.

1. Harsh weather environments may demand performance enhancing equipment. Ask your Mitsubishi Electric representative for more details about your region.
2. For details on extended cooling operation range down to -10° F DB, see Low Ambient Kit Submittal.
3. When applying product below -4°F, consult your design engineer for cold climate application best practices, including the use of a backup source for heating.
4. Unit will continue to operate in extended operating range, but capacity is not guaranteed.
5. Efficiency ratings are based on AHRI 1230 test method

PURY-P** (T/Y) NU-A

SPECIFICATIONS			MODEL NAMES		
VOLTAGES		208V /230V	PURY-P288TSNU-A (-BS)	PURY-P312TSNU-A (-BS)	PURY-P336TSNU-A (-BS)
			With 2 PURY-P144TNU-A (-BS)	With 1 PURY-P168TNU-A (-BS) and 1 PURY-P1 44TNU-A (-BS)	With 2 PURY-P168TNU-A (-BS)
		460V	PURY-P288YSNU-A (-BS)	PURY-P312YSNU-A (-BS)	PURY-P336YSNU-A (-BS)
			With 2 PURY-P144YNU-A (-BS)	With 1 PURY-P168YNU-A (-BS) and 1 PURY-P144YNU-A (-BS)	With 2 PURY-P168YNU-A (-BS)
Power Source			3-phase 3-wire 208-230 V ±10% 60 Hz		
			3-phase 3-wire 460 V ±10% 60 Hz		
Capacity (Nominal)	Cooling	Btu/h	288,000	312,000	336,000
	Heating	Btu/h	323,000	350,000	378,000
Electrical Supply	MCA	A	Refer to: PURY-P144TNU-A (-BS)	Refer to: PURY-P168TNU-A (-BS) PURY-P144TNU-A (-BS)	Refer to: PURY-P168TNU-A (-BS)
	MOP	A			
	SCCR	A	PURY-P144YNU-A (-BS)	PURY-P168YNU-A (-BS) PURY-P144YNU-A (-BS)	PURY-P168YNU-A (-BS)
	Recommended Fuse Size	A			
Fan	Type X Quantity				
	Airflow Rate	CFM			
	External Static Pressure				
Compressor	Type X Quantity				
	Operating Range		7.5% to 100%	7.5% to 100%	7.5% to 100%
	Lubricant		Refer to: PURY-P144TNU-A (-BS)	Refer to: PURY-P168TNU-A (-BS) PURY-P144TNU-A (-BS)	Refer to: PURY-P168TNU-A (-BS)
Refrigerant	Type				
External Finish					
Dimensions	Height	In.			
	Width		PURY-P144YNU-A (-BS)	PURY-P168YNU-A (-BS) PURY-P144YNU-A (-BS)	PURY-P168YNU-A (-BS)
	Depth				
Net Weight		lbs.			
Sound Pressure Level (Measured in Anechoic Room)		dB(A)	68.0/68.5	67.0/69.0	65.5/69.5
Sound Pressure Level (Measured in Anechoic Room)		dB(A)	88.5/88.5W	87.0/88.5	84.0/88.5
Protection Devices	High Pressure		High pressure sensor, High pressure switch at 4.15 MPa (601 psi)		
	Inverter Circuit (Compressor/Fan)		Over-heat protection, Over-current protection		
Refrigerant Pipe Dimensions	Liquid (High Pressure) (Brazed)	In.	1-1/8 Brazed		
	Gas (Low Pressure) (Brazed)		1-3/8 Brazed	1-5/8 Brazed	1-5/8 Brazed
Indoor Unit Connectable	Total capacity		50-150% of outdoor unit capacity		
	Model / Quantity		P05-P96/2-50		
Guaranteed Operating Range *1	Cooling (Outdoor) *2		23-126°F (-5-52°C)		
	Heating (Outdoor) *3		-4-60°F (-20-15.5°C)		
Extended Operating Range *4	Heating (Outdoor)		-18-60°F (-28-15.5°C)		
Efficiency Ratings *5	EER (Ducted/Non-Ducted)		10.2 / 10.9	10.1 / 10.2	9.9 / 9.5
	IEER (Ducted/Non-Ducted)		22.1 / 26.4	21.4 / 24.6	20.5 / 23
	COP (Ducted/Non-Ducted)		3.20 / 3.44	3.20 / 3.36	3.2 / 3.29
	SCHE (Ducted/Non-Ducted)		21.7 / 24.5	20.6 / 23.8	20.4 / 23.4

NOTES:

Nominal cooling conditions (Test conditions are based on AHRI 1230) Indoor: 80°FD.B./67°FW.B. (26.7°CD.B./19.4°CW.B.), Outdoor: 95°FD.B. (35°CD.B.)

Nominal heating conditions (Test conditions are based on AHRI 1230) Indoor: 70°FD.B. (21.1°CD.B.), Outdoor: 47°FD.B./43°FW.B. (8.3°CD.B./6.1°CW.B.)

Twinning kit is required for combining multiple individual outdoor units in the field for PURY-PT(Y)SNU combined systems.

1. Harsh weather environments may demand performance enhancing equipment. Ask your Mitsubishi Electric representative for more details about your region.
2. For details on extended cooling operation range down to -10° F DB, see Low Ambient Kit Submittal.
3. When applying product below -4°F, consult your design engineer for cold climate application best practices, including the use of a backup source for heating.
4. Unit will continue to operate in extended operating range, but capacity is not guaranteed.
5. Efficiency ratings are based on AHRI 1230 test method

PURY-EP** (T/Y) NU-A

SPECIFICATIONS			MODEL NAMES				
VOLTAGES		208V /230V	PURY-EP72TNU-A (-BS)	PURY-EP96TNU-A (-BS)	PURY-EP120TNU-A (-BS)	PURY-EP144TNU-A (-BS)	PURY-EP168TNU-A (-BS)
		460V	PURY-EP72YNU-A (-BS)	PURY-EP96YNU-A (-BS)	PURY-EP120YNU-A (-BS)	PURY-EP144YNU-A (-BS)	PURY-EP168YNU-A (-BS)
Power Source			3-phase 3-wire 208-230 V ±10% 60 Hz				
			3-phase 3-wire 460 V ±10% 60 Hz				
Capacity (Nominal)	Cooling	Btu/h	72,000	96,000	120,000	144,000	168,000
	Heating	Btu/h	80,000	108,000	135,000	160,000	188,000
Electrical Supply	MCA	A	23-21	31-29	41-38	49-45	57-53
			10	14	19	22	26
	MOP	A	35-30	45-45	60-60	80-70	90-80
			15	20	30	35	40
	SCCR	A	5	5	5	5	5
	Recommended Fuse Size	A	30	40	50	60	70
			15	20	25	30	40
Fan	Type X Quantity		Propeller fan x 1	Propeller fan x 2	Propeller fan x 2	Propeller fan x 2	Propeller fan x 2
	Airflow Rate	CFM	6,000	7,400	8,300	9,550	14,850
	External Static Pressure		Selectable; 0, 0.12, 0.24, 0.32 in.WG; factory set to 0 in.WG				
Compressor	Type X Quantity		Inverter scroll hermetic compressor x 1				
	Operating Range		15% to 100%	15% to 100%	15% to 100%	15% to 100%	15% to 100%
	Lubricant		MEL32				
Refrigerant	Type		R410A				
External Finish			Pre-coated galvanized steel sheet (+powder coating for -BS type) <MUNSELL 5Y 8/1>				
Dimensions	Height	In.	71-5/8				
	Width		36-1/4	48-7/8	48-7/8	48-7/8	68-29/32
	Depth		29-5/32				
Net Weight		lbs.	519	613	622	680	777
			552	649	657	715	807
Sound Pressure Level (Measured in Anechoic Room)		dB(A)	56.5/58.0	58.5/60.0	60.0/62.0	65.0/65.5	62.5/66.5
Sound Pressure Level (Measured in Anechoic Room)		dB(A)	75.5/77.0	77.5/79.0	80.0/80.5	85.5/85.5	81.0/85.5
Protection Devices	High Pressure		High pressure sensor, High pressure switch at 4.15 MPa (601 psi)				
	Inverter Circuit (Compressor/Fan)		Over-heat protection, Over-current protection				
Refrigerant Pipe Dimensions	Liquid (High Pressure) (Brazed)	In.	5/8 Brazed	3/4 Brazed	3/4 Brazed	7/8 Brazed	7/8 Brazed
	Gas (Low Pressure) (Brazed)		3/4 Brazed	7/8 Brazed	1-1/8 Brazed	1-1/8 Brazed	1-1/8 Brazed
Indoor Unit Connectable	Total capacity		50-150% of outdoor unit capacity				
	Model / Quantity		P05-P96/1-18	P05-P96/1-24	P05-P96/1-30	P05-P96/1-36	P05-P96/1-42
Guaranteed Operating Range *1	Cooling (Outdoor) *2		23-126°F (-5-52°C)				
	Heating (Outdoor) *3		-13F~60°F (-25-15.5°C)				
Extended Operating Range *4	Heating (Outdoor)		-25-60°F (-31.5-15.5°C)				
Efficiency Ratings *5	EER (Ducted/ Non-Ducted)		13.4 / 15.4	13.7 / 15.1	12.6 / 13.8	11.7 / 12.9	11.2 / 11.9
	IEER (Ducted/ Non-Ducted)		24.5 / 31.2	26.5 / 33.1	25.0 / 30.1	24.1 / 29.7	23.4 / 28.0
	COP (Ducted/ Non-Ducted)		3.81 / 4.37	3.94 / 4.26	3.71 / 4.04	3.49 / 3.86	3.30 / 3.80
	SCHE (Ducted/ Non-Ducted)		25.9 / 25.5	23.5 / 28.3	25.3 / 29.1	24.8 / 27.7	24.7 / 28.3

NOTES:

Nominal cooling conditions (Test conditions are based on AHRI 1230) Indoor: 80°FD.B./67°FW.B. (26.7°CD.B./19.4°CW.B.), Outdoor: 95°FD.B. (35°CD.B.)

Nominal heating conditions (Test conditions are based on AHRI 1230) Indoor: 70°FD.B. (21.1°CD.B.), Outdoor: 47°FD.B./43°FW.B. (8.3°CD.B./6.1°CW.B.)

1. Harsh weather environments may demand performance enhancing equipment. Ask your Mitsubishi Electric representative for more details about your region.

2. For details on extended cooling operation range down to -10° F DB, see Low Ambient Kit Submittal.

3. When applying product below -4°F, consult your design engineer for cold climate application best practices, including the use of a backup source for heating.

4. Unit will continue to operate in extended operating range, but capacity is not guaranteed.

5. Efficiency ratings are based on AHRI 1230 test method

PURY-EP** (T/Y) NU-A

SPECIFICATIONS			MODEL NAMES		
VOLTAGES		208V /230V	PURY-EP192TNU-A (-BS)	PURY-EP216TNU-A (-BS)	PURY-EP240TNU-A (-BS)
		460V	PURY-EP192YNU-A (-BS)	PURY-EP216YNU-A (-BS)	PURY-EP240YNU-A (-BS)
Power Source			3-phase 3-wire 208-230 V ±10% 60 Hz		
			3-phase 3-wire 460 V ±10% 60 Hz		
Capacity (Nominal)	Cooling	Btu/h	192,000	216,000	240,000
	Heating	Btu/h	215,000	243,000	250,000
Electrical Supply	MCA	A	66/60	73/67	82/75
			30	33	37
	MOP	A	110/100	125/110	125/125
			52	50	60
	SCCR	A	5		
	Recommended Fuse Size	A	80/80	100/90	100/90
			40	50	50
Fan	Type X Quantity		Propeller fan x 2Propeller fan x 2		
	Airflow Rate	CFM	13,050	14,100	14,500
	External Static Pressure		Selectable; 0, 0.12, 0.24, 0.32 in.WG; factory set to 0 in.WG		
Compressor	Type X Quantity		Inverter scroll hermetic compressor x 1	Inverter scroll hermetic compressor	Inverter scroll hermetic compressor x 1
	Operating Range		15% to 100%		
	Lubricant		MEL32		
Refrigerant	Type		R410A		
External Finish			Pre-coated galvanized steel sheet (+powder coating for -BS type)		
Dimensions	Height	In.	71-5/8		
	Width		68-15/16		
	Depth		29-3/16		
Net Weight		lbs.	887 (402)		
			918 (416)		
Sound Pressure Level (Measured in Anechoic Room)		dB(A)	64.5/66.0	66.5/67.5	67.5/68.0
Sound Pressure Level (Measured in Anechoic Room)		dB(A)	83.5/85.0	85.5/86.5	86.5/87.0
Protection Devices	High Pressure		High pressure sensor, High pressure switch at 4.15 MPa (601 psi)		
	Inverter Circuit (Compressor/Fan)		Over-heat protection, Over-current protection		
Refrigerant Pipe Dimensions	Liquid (High Pressure) (Brazed)	In.	7/8 (22.2) Brazed	7/8 (22.2) Brazed (1-1/8 (28.58) Brazed for the part that exceeds 65 m)	7/8 (22.2) Brazed (1-1/8 (28.58) Brazed for the part that exceeds 65 m)
	Gas (Low Pressure) (Brazed)		1-1/8 (28.58) Brazed	1-1/8 (28.58) Brazed	1-3/8 (34.93) Brazed
Indoor Unit Connectable	Total capacity		50-150% of outdoor unit capacity		
	Model / Quantity		P05-P96/2-50		
Guaranteed Operating Range *1	Cooling (Outdoor) *2		23-126°F (-5-52°C)		
	Heating (Outdoor) *3		-4-60°F (-20-15.5°C)		
Extended Operating Range *4	Heating (Outdoor)		-25-60°F (-31.5-15.5°C)		
Efficiency Ratings *5	EER (Ducted/Non-Ducted) IEER (Ducted/Non-Ducted) COP (Ducted/Non-Ducted) SCHE (Ducted/Non-Ducted)		11.3 / 12.2 20.0 / 26.5 3.34 / 3.76 24.7 / 28.3	10.9 / 11.4 19.7 / 24.9 3.23 / 3.62 23.8 / 27.8	10.5 / 10.5 19.6 / 22.8 3.2 / 3.42 23.6 / 26.3

NOTES:

Nominal cooling conditions (Test conditions are based on AHRI 1230) Indoor: 80°FD.B./67°FW.B. (26.7°CD.B./19.4°CW.B.), Outdoor: 95°FD.B. (35°CD.B.)

Nominal heating conditions (Test conditions are based on AHRI 1230) Indoor: 70°FD.B. (21.1°CD.B.), Outdoor: 47°FD.B./43°FW.B. (8.3°CD.B./6.1°CW.B.)

Twinning kit is required for combining multiple individual outdoor units in the field for PURY-PT(Y)SNU combined systems.

1. Harsh weather environments may demand performance enhancing equipment. Ask your Mitsubishi Electric representative for more details about your region.
2. For details on extended cooling operation range down to -10° F DB, see Low Ambient Kit Submittal.
3. When applying product below -4°F, consult your design engineer for cold climate application best practices, including the use of a backup source for heating.
4. Unit will continue to operate in extended operating range, but capacity is not guaranteed.
5. Efficiency ratings are based on AHRI 1230 test method

PURY-EP** (T/Y) NU-A

SPECIFICATIONS			MODEL NAMES			
VOLTAGES		208V /230V	PURY-EP192TSNU-A (-BS)	PURY-EP216TSNU-A (-BS)	PURY-EP240TSNU-A (-BS)	PURY-EP264TSNU-A (-BS)
			With 2 PURY-EP96TNU-A (-BS)	With 1 PURY-EP120TNU-A (-BS) and 1 PURY-EP96TNU-A (-BS)	With 2 PURY-EP120TNU-A (-BS)	With 1 PURY-EP144TNU-A (-BS) and 1 PURY-EP120TNU-A (-BS)
		460V	PURY-EP192YSNU-A (-BS)	PURY-EP216YSNU-A (-BS)	PURY-EP240YSNU-A (-BS)	PURY-EP264YSNU-A (-BS)
			With 2 PURY-EP96YNU-A (-BS)	With 1 PURY-EP120YNU-A (-BS) and 1 PURY-EP96YNU-A (-BS)	With 2 PURY-EP120YNU-A (-BS)	With 1 PURY-EP144YNU-A (-BS) and 1 PURY-EP120YNU-A (-BS)
Power Source			3-phase 3-wire 208-230 V ±10% 60 Hz			
			3-phase 3-wire 460 V ±10% 60 Hz			
Capacity (Nominal)	Cooling	Btu/h	192,000	216,000	240,000	264,000
	Heating	Btu/h	215,000	243,000	270,000	295,000
Electrical Supply	MCA	A	Refer to: PURY-EP96TNU-A (-BS)	Refer to: PURY-EP120TNU-A (-BS) PURY-EP96TNU-A (-BS)	Refer to: PURY-EP120TNU-A (-BS)	Refer to: PURY-EP144TNU-A (-BS) PURY-EP120TNU-A (-BS)
	MOP	A				
	SCCR	A	PURY-EP96YNU-A (-BS)	PURY-EP120YNU-A (-BS) PURY-EP96YNU-A (-BS)	PURY-EP120YNU-A (-BS)	PURY-EP144YNU-A (-BS) PURY-EP120YNU-A (-BS)
	Recommended Fuse Size	A				
Fan	Type X Quantity					
	Airflow Rate	CFM				
	External Static Pressure					
Compressor	Type X Quantity					
	Operating Range		15% to 100%	15% to 100%	15% to 100%	15% to 100%
	Lubricant		Refer to: PURY-EP96TNU-A (-BS)	Refer to: PURY-EP120TNU-A (-BS) PURY-EP96TNU-A (-BS)	Refer to: PURY-EP120TNU-A (-BS)	Refer to: PURY-EP144TNU-A (-BS) PURY-EP120TNU-A (-BS)
Refrigerant	Type					
External Finish						
Dimensions	Height	In.	PURY-EP96YNU-A (-BS)	PURY-EP120YNU-A (-BS) PURY-EP96YNU-A (-BS)	PURY-EP120YNU-A (-BS)	PURY-EP144YNU-A (-BS) PURY-EP120YNU-A (-BS)
	Width					
	Depth					
Net Weight		lbs.				
Sound Pressure Level (Measured in Anechoic Room)		dB(A)	61.5/63.0	62.5/64.5	63.0/65.0	66.5/67.5
Sound Pressure Level (Measured in Anechoic Room)		dB(A)	80.5/82.0	82.0/83.0	83.0/83.5	87.0/87.0
Protection Devices	High Pressure		High pressure sensor, High pressure switch at 4.15 MPa (601 psi)			
	Inverter Circuit (Compressor/ Fan)		Over-heat protection, Over-current protection			
Refrigerant Pipe Dimensions	Liquid (High Pressure) (Brazed)	In.	7/8 Brazed	7/8 Brazed (1-1/8 Brazed for the part that exceeds 65 m)	7/8 Brazed (1-1/8 Brazed for the part that exceeds 65 m)	1-1/8 Brazed
	Gas (Low Pressure) (Brazed)		1-1/8 Brazed	1-1/8 Brazed	1-3/8 Brazed	1-3/8 Brazed
Indoor Unit Connectable	Total capacity		50-150% of outdoor unit capacity			
	Model / Quantity		P05-P96/1-48	P05-P96/2-50	P05-P96/2-50	P05-P96/2-50
Guaranteed Operating Range *1	Cooling (Outdoor) *2		23-126°F (-5-52°C)			
	Heating (Outdoor) *3		-13F-60°F (-25-15.5°C)			
Extended Operating Range *4	Heating (Outdoor)		-25-60°F (-31.5-15.5°C)			
Efficiency Ratings *5	EER (Ducted/Non-Ducted)		12.7 / 14.1	12.2 / 13.5	11.7 / 12.2	11.3 / 11.9
	IEER (Ducted/Non-Ducted)		25.3 / 31.8	24.6 / 30.4	23.9 / 27.4	23.5 / 27.4
	COP (Ducted/Non-Ducted)		3.66 / 3.99	3.56 / 3.89	3.46 / 3.58	3.36 / 3.53
	SCHE (Ducted/Non-Ducted)		23.0 / 28.0	22.7 / 26.9	22.9 / 26.8	22.3 / 25.7

NOTES:

Nominal cooling conditions (Test conditions are based on AHRI 1230) Indoor: 80°FD.B./67°FW.B. (26.7°CD.B./19.4°CW.B.), Outdoor: 95°FD.B. (35°CD.B.)

Nominal heating conditions (Test conditions are based on AHRI 1230) Indoor: 70°FD.B. (21.1°CD.B.), Outdoor: 47°FD.B./43°FW.B. (8.3°CD.B./6.1°CW.B.)

Twinning kit is required for combining multiple individual outdoor units in the field for PURY-EPT(Y)SNU combined systems.

1. Harsh weather environments may demand performance enhancing equipment. Ask your Mitsubishi Electric representative for more details about your region.
2. For details on extended cooling operation range down to -10° F DB, see Low Ambient Kit Submittal.
3. When applying product below -4°F, consult your design engineer for cold climate application best practices, including the use of a backup source for heating.
4. Unit will continue to operate in extended operating range, but capacity is not guaranteed.
5. Efficiency ratings are based on AHRI 1230 test method

PURY-EP** (T/Y) NU-A

SPECIFICATIONS			MODEL NAMES		
VOLTAGES		208V /230V	PURY-EP288TSNU-A (-BS)	PURY-EP312TSNU-A (-BS)	PURY-EP336TSNU-A (-BS)
			With 2 PURY-EP144TNU-A (-BS)	With 1 PURY-EP168TNU-A (-BS) and 1 PURY-EP144TNU-A (-BS)	With 2 PURY-EP168TNU-A (-BS)
		460V	PURY-EP288YSNU-A (-BS)	PURY-EP312YSNU-A (-BS)	PURY-EP336YSNU-A (-BS)
			With 2 PURY-EP144YNU-A (-BS)	With 1 PURY-EP168YNU-A (-BS) and 1 PURY-EP144YNU-A (-BS)	With 2 PURY-EP168YNU-A (-BS)
Power Source			3-phase 3-wire 208-230 V ±10% 60 Hz		
			3-phase 3-wire 460 V ±10% 60 Hz		
Capacity (Nominal)	Cooling	Btu/h	288,000	312,000	336,000
	Heating	Btu/h	323,000	350,000	378,000
Electrical Supply	MCA	A	Refer to: PURY-EP144TNU-A (-BS)	Refer to: PURY-EP168TNU-A (-BS) PURY-EP144TNU-A (-BS)	Refer to: PURY-EP168TNU-A (-BS)
	MOP	A			
	SCCR	A	PURY-EP144YNU-A (-BS)	PURY-EP168YNU-A (-BS) PURY-EP144YNU-A (-BS)	PURY-EP168YNU-A (-BS)
	Recommended Fuse Size	A			
Fan	Type X Quantity				
	Airflow Rate	CFM			
	External Static Pressure				
Compressor	Type X Quantity				
	Operating Range		15% to 100%	15% to 100%	15% to 100%
	Lubricant		Refer to: PURY-EP144TNU-A (-BS)	Refer to: PURY-EP168TNU-A (-BS) PURY-EP144TNU-A (-BS)	Refer to: PURY-EP168TNU-A (-BS)
Refrigerant	Type				
External Finish					
Dimensions	Height	In.	PURY-EP144YNU-A (-BS)	PURY-EP168YNU-A (-BS) PURY-EP144YNU-A (-BS)	PURY-EP168YNU-A (-BS)
	Width				
	Depth				
Net Weight		lbs.			
Sound Pressure Level (Measured in Anechoic Room)		dB(A)	68.0/68.5	67.0/69.0	65.5/69.5
Sound Pressure Level (Measured in Anechoic Room)		dB(A)	88.5/88.5	87.0/88.5	84.0/88.5
Protection Devices	High Pressure		High pressure sensor, High pressure switch at 4.15 MPa (601 psi)		
	Inverter Circuit (Compressor/Fan)		Over-heat protection, Over-current protection		
Refrigerant Pipe Dimensions	Liquid (High Pressure) (Brazed)	In.	1-1/8 Brazed		
	Gas (Low Pressure) (Brazed)		1-3/8 Brazed	1-5/8 Brazed	1-5/8 Brazed
Indoor Unit Connectable	Total capacity		50-150% of outdoor unit capacity		
	Model / Quantity		P05-P96/2-50		
Guaranteed Operating Range *1	Cooling (Outdoor) *2		23-126°F (-5-52°C)		
	Heating (Outdoor) *3		-13F-60°F (-25-15.5°C)		
Extended Operating Range *4	Heating (Outdoor)		-25-60°F (-31.5-15.5°C)		
Efficiency Ratings *5	EER (Ducted/Non-Ducted)		10.9 / 11.5	10.7 / 10.9	10.5 / 10.3
	IEER (Ducted/Non-Ducted)		23.1 / 27.4	22.8 / 26.1	22.5 / 24.9
	COP (Ducted/Non-Ducted)		3.26 / 3.46	3.24 / 3.37	3.22 / 3.29
	SCHE (Ducted/Non-Ducted)		21.7 / 24.5	20.6 / 23.8	20.4 / 23.4

NOTES:

Nominal cooling conditions (Test conditions are based on AHRI 1230) Indoor: 80°FD.B./67°FW.B. (26.7°CD.B./19.4°CW.B.), Outdoor: 95°FD.B. (35°CD.B.)

Nominal heating conditions (Test conditions are based on AHRI 1230) Indoor: 70°FD.B. (21.1°CD.B.), Outdoor: 47°FD.B./43°FW.B. (8.3°CD.B./6.1°CW.B.)

Twinning kit is required for combining multiple individual outdoor units in the field for PURY-EPT(Y)SNU combined systems.

1. Harsh weather environments may demand performance enhancing equipment. Ask your Mitsubishi Electric representative for more details about your region.
2. For details on extended cooling operation range down to -10° F DB, see Low Ambient Kit Submittal.
3. When applying product below -4°F, consult your design engineer for cold climate application best practices, including the use of a backup source for heating.
4. Unit will continue to operate in extended operating range, but capacity is not guaranteed.
5. Efficiency ratings are based on AHRI 1230 test method

PURY-HP** (T/Y) NU-A

SPECIFICATION			MODEL NAMES	
VOLTAGES		208V /230V	PURY-EP384TSNU-A (-BS)	PURY-EP432TSNU-A (-BS)
			With 1 PURY-EP384TSNU-A (-BS) and 1 PURY-EP192TNU-A (-BS)	With 1 PURY-EP432TSNU-A (-BS) and 1 PURY-EP216TNU-A (-BS)
		460V	PURY-EP384YSNU-A (-BS)	PURY-EP432YSNU-A (-BS)
			With 1 PURY-EP384YSNU-A (-BS) and 1 PURY-EP192YNU-A (-BS)	With 1 PURY-EP432YSNU-A (-BS) and 1 PURY-EP216YNU-A (-BS)
Power Source			3-phase 3-wire 208-230 V ±10% 60 Hz	
			3-phase 3-wire 460 V ±10% 60 Hz	
Capacity (Nominal)	Cooling	Btu/h	384,000	432,000
	Heating	Btu/h	430,000	480,000
Electrical Supply	MCA	A	Refer to: PURY-EP384TSNU-A (-BS) PURY-EP192TNU-A (-BS)	Refer to: PURY-EP432TSNU-A (-BS) PURY-EP216TNU-A (-BS)
	MOP	A		
	SCCR	A	PURY-EP384YSNU-A (-BS)	PURY-EP432YSNU-A (-BS)
	Recommended Fuse Size	A	PURY-EP192YNU-A (-BS)	PURY-EP216YNU-A (-BS)
Fan	Type X Quantity			
	Airflow Rate	CFM		
	External Static Pressure			
Compressor	Type X Quantity			
	Operating Range		7.5% to 100%	7.5% to 100%
	Lubricant		Refer to: PURY-EP384TSNU-A (-BS) PURY-EP192TNU-A (-BS)	Refer to: PURY-EP432TSNU-A (-BS) PURY-EP216TNU-A (-BS)
Refrigerant	Type			
External Finish				
Dimensions	Height	In.		
	Width	In.	PURY-EP384YSNU-A (-BS)	PURY-EP432YSNU-A (-BS)
	Depth	In.	PURY-EP192YNU-A (-BS)	PURY-EP216YNU-A (-BS)
Net Weight		lbs.		
Sound Pressure Level (Measured in Anechoic Room)		dB(A)	67.5/69.0	69.5/70.0
Sound Pressure Level (Measured in Anechoic Room)		dB(A)	86.5/89.0	88.5/89.0
Protection Devices	High Pressure		High pressure sensor, High pressure switch at 4.15 MPa (601 psi)	
	Inverter Circuit (Compressor/ Fan)		Over-heat protection, Over-current protection	
Refrigerant Pipe Dimen-sions	Liquid (High Pressure) (Brazed)		1-1/8 (28.58) Brazed	
	Gas (Low Pressure) (Brazed)		1-5/8 (41.28) Brazed	
Indoor Unit Connectable	Total capacity		50~150% of outdoor unit capacity	
	Model / Quantity		P05-P96/2-50	
Guaranteed Operating Range *1	Cooling (Outdoor) *2		23~126°F (-5~52°C)	
	Heating (Outdoor) *3		-4~60°F (-20~15.5°C)	
Extended Operating Range *4	Heating (Outdoor)		-25~60°F (-31.5~15.5°C)	
Efficiency Ratings *5	EER (Ducted/Non-Ducted)		10.9 / 12.2	11.9 / 13.5
	IEER (Ducted/Non-Ducted)		19.7 / 24.5	18.9 / 25.6
	COP (Ducted/Non-Ducted)		3.45 / 3.82	3.6 / 3.88
	SCHE (Ducted/Non-Ducted)		24.8 / 27.7	23 / 28

NOTES:

Nominal cooling conditions (Test conditions are based on AHRI 1230) Indoor: 80°FD.B./67°FW.B. (26.7°CD.B./19.4°CW.B.), Outdoor: 95°FD.B. (35°CD.B.)

Nominal heating conditions (Test conditions are based on AHRI 1230) Indoor: 70°FD.B. (21.1°CD.B.), Outdoor: 47°FD.B./43°FW.B. (8.3°CD.B./6.1°CW.B.)

Twinning kit is required for combining multiple individual outdoor units in the field for PURY-EPT(Y)SNU combined systems.

1. Harsh weather environments may demand performance enhancing equipment. Ask your Mitsubishi Electric representative for more details about your region.
2. For details on extended cooling operation range down to -10° F DB, see Low Ambient Kit Submittal.
3. When applying product below -4°F, consult your design engineer for cold climate application best practices, including the use of a backup source for heating.
4. Unit will continue to operate in extended operating range, but capacity is not guaranteed.
5. Efficiency ratings are based on AHRI 1230 test method

PURY-HP** (T/Y) NU-A

SPECIFICATION			MODEL NAMES		
VOLTAGES		208V /230V	PURY-HP72TNU-A	PURY-HP96TNU-A	PURY-HP120TNU-A
		460V	PURY-HP72YNU-A	PURY-HP96YNU-A	PURY-HP120YNU-A
Power Source			3-phase 3-wire 208-230 V ±10% 60 Hz		
			3-phase 3-wire 460 V ±10% 60 Hz		
Capacity (Nominal)	Cooling	Btu/h	72,000	96,000	120,000
	Heating	Btu/h	80,000	108,000	135,000
Electrical Supply	MCA	A	38-35	44-40	47-44
			17	20	21
	MOP	A	60-50	70-60	70-60
			25	30	35
	SCCR	A	5	5	5
	Recommended Fuse Size	A	TBD		
			TBD		
Fan	Type X Quantity		Propeller fan x 2	Propeller fan x 2	Propeller fan x 2
	Airflow Rate	CFM	7,400	8,300	9,550
	External Static Pressure		Selectable; 0, 0.12, 0.24, 0.32 in.WG; factory set to 0 in.WG		
Compressor	Type X Quantity		Inverter scroll hermetic compressor x 1		
	Operating Range		15% to 100%	15% to 100%	15% to 100%
	Lubricant		MEL46		
Refrigerant	Type		R410A		
External Finish			Pre-coated galvanized steel sheet <MUNSELL 5Y 8/1>		
Dimensions	Height	In.	71-5/8		
	Width	In.	48-7/8		
	Depth	In.	29-3/16		
Net Weight		lbs.	609	662	662
			644	697	697
Sound Pressure Level (Measured in Anechoic Room)		dB(A)	56.5/58.0	58.5/60.0	64.0/65.0
Sound Pressure Level (Measured in Anechoic Room)		dB(A)	75.5/77.0	77.5/79.0	84.0/85.0
Protection Devices	High Pressure		Over-heat protection, Over-current protection		
	Inverter Circuit (Compressor/ Fan)		Over-current protection		
Refrigerant Pipe Dimensions	Liquid (High Pressure) (Brazed)		5/8 Brazed	3/4 Brazed	3/4 Brazed
	Gas (Low Pressure) (Brazed)		3/4 Brazed	7/8 Brazed	1-1/8 Brazed
Indoor Unit Connect-able	Total capacity		50~150% of outdoor unit capacity		
	Model / Quantity		P05-P96/1-18	P05-P96/1-24	P05-P96/1-30
Guaranteed Operating Range *1	Cooling (Outdoor) *2		23~126°F (-5~52°C)		
	Heating (Outdoor) *3		-22~60°F (-30~15.5°C)		
Extended Operating Range *4	Heating (Outdoor)		-31~60°F (-35~15.5°C)		
Efficiency Ratings *5	EER (Ducted/Non-Ducted)		11.9 / 13.1	12.8 / 14.5	12.1 / 13.2
	IEER (Ducted/Non-Ducted)		20.9 / 25.6	19.8 / 26.6	19.7 / 24.4
	COP (Ducted/Non-Ducted)		3.76 / 4.09	3.88 / 4.14	3.61 / 4.01
	SCHE (Ducted/Non-Ducted)		25.9 / 25.5	23.5 / 28.3	25.3 / 29.1

NOTES:

Nominal cooling conditions (Test conditions are based on AHRI 1230) Indoor: 80°FD.B./67°FW.B. (26.7°CD.B./19.4°CW.B.), Outdoor: 95°FD.B. (35°CD.B.)

Nominal heating conditions (Test conditions are based on AHRI 1230) Indoor: 70°FD.B. (21.1°CD.B.), Outdoor: 47°FD.B./43°FW.B. (8.3°CD.B./6.1°CW.B.)

Twinning kit is required for combining multiple individual outdoor units in the field for PURY-EPT(Y)SNU combined systems.

1. Harsh weather environments may demand performance enhancing equipment. Ask your Mitsubishi Electric representative for more details about your region.
2. For details on extended cooling operation range down to -10° F DB, see Low Ambient Kit Submittal.
3. When applying product below -4°F, consult your design engineer for cold climate application best practices, including the use of a backup source for heating.
4. Unit will continue to operate in extended operating range, but capacity is not guaranteed.
5. Efficiency ratings are based on AHRI 1230 test method

PURY-HP** (T/Y) NU-A

SPECIFICATION			MODEL NAMES		
VOLTAGES		208V /230V	PURY-HP144TSNU-A	PURY-HP192TSNU-A	PURY-HP240TSNU-A
			With 2 PURY-HP72TNU-A	With 2 PURY-HP96TNU-A	With 2 PURY-HP120TNU-A
		460V	PURY-HP144YSNU-A	PURY-HP192YSNU-A	PURY-HP240YSNU-A
			With 2 PURY-HP72YNU-A	With 2 PURY-HP96YNU-A	With 2 PURY-HP120YNU-A
Power Source			3-phase 3-wire 208-230 V ±10% 60 Hz		
			3-phase 3-wire 460 V ±10% 60 Hz		
Capacity (Nominal)	Cooling	Btu/h	144,000	192,000	240,000
	Heating	Btu/h	160,000	215,000	270,000
Electrical Supply	MCA	A	Refer to: PURY-HP72TNU-A	Refer to: PURY-HP96TNU-A	Refer to: PURY-HP120TNU-A
	MOP	A			
	SCCR	A	PURY-HP72YNU-A	PURY-HP96YNU-A	PURY-HP120YNU-A
	Recommended Fuse Size	A			
Fan	Type X Quantity				
	Airflow Rate	CFM			
	External Static Pressure				
Compressor	Type X Quantity				
	Operating Range		7.5% to 100%	7.5% to 100%	7.5% to 100%
	Lubricant		Refer to: PURY-HP72TNU-A	Refer to: PURY-HP96TNU-A	Refer to: PURY-HP120TNU-A
Refrigerant	Type				
External Finish					
Dimensions	Height	In.			
	Width	In.	PURY-HP72YNU-A	PURY-HP96YNU-A	PURY-HP120YNU-A
	Depth	In.			
Net Weight		lbs.			
Sound Pressure Level (Measured in Anechoic Room)		dB(A)	59.5/61.0	61.5/63.0	67.0/68.0
Sound Pressure Level (Measured in Anechoic Room)		dB(A)	78.5/80.0	80.5/82.0	87.0/88.0
Protection Devices	High Pressure		Over-heat protection, Over-current protection		
	Inverter Circuit (Compressor/ Fan)		Over-current protection		
Refrigerant Pipe Dimensions	Liquid (High Pressure) (Brazed)		7/8 Brazed	7/8 Brazed	7/8 Brazed (1-1/8 Brazed for the part that exceeds 65 m)
	Gas (Low Pressure) (Brazed)		1-1/8 Brazed	1-1/8 Brazed	1-3/8 Brazed
Indoor Unit Connectable	Total capacity		50~150% of outdoor unit capacity		
	Model / Quantity		P05-P96/1-36	P05-P96/1-48	P05-P96/2-50
Guaranteed Operating Range *1	Cooling (Outdoor) *2		23~126°F (-5~52°C)		
	Heating (Outdoor) *3		-22~60°F (-30~15.5°C)		
Extended Operating Range *4	Heating (Outdoor)		-31~60°F (-35~15.5°C)		
Efficiency Ratings *5	EER (Ducted/Non-Ducted)		10.9 / 12.2	11.9 / 13.5	11.2 / 11.7
	IEER (Ducted/Non-Ducted)		19.7 / 24.5	18.9 / 25.6	18.8 / 22.2
	COP (Ducted/Non-Ducted)		3.45 / 3.82	3.6 / 3.88	3.36 / 3.56
	SCHE (Ducted/Non-Ducted)		24.8 / 27.7	23 / 28	22.9 / 26.8

NOTES:

Nominal cooling conditions (Test conditions are based on AHRI 1230) Indoor: 80°FD.B./67°FW.B. (26.7°CD.B./19.4°CW.B.), Outdoor: 95°FD.B. (35°CD.B.)

Nominal heating conditions (Test conditions are based on AHRI 1230) Indoor: 70°FD.B. (21.1°CD.B.), Outdoor: 47°FD.B./43°FW.B. (8.3°CD.B./6.1°CW.B.)

Twinning kit is required for combining multiple individual outdoor units in the field for PURY-EPT(Y)SNU combined systems.

1. Harsh weather environments may demand performance enhancing equipment. Ask your Mitsubishi Electric representative for more details about your region.
2. For details on extended cooling operation range down to -10° F DB, see Low Ambient Kit Submittal.
3. When applying product below -4°F, consult your design engineer for cold climate application best practices, including the use of a backup source for heating.
4. Unit will continue to operate in extended operating range, but capacity is not guaranteed.
5. Efficiency ratings are based on AHRI 1230 test method

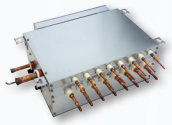

SPECIFICATIONS: BC CONTROLLER

CMB-P-NU-J1 (Single BC)

SPECIFICATIONS			MODEL NAMES				
			CMB-P104NU-J1	CMB-P106NU-J1	CMB-P108NU-J1	CMB-P1012NU-J1	CMB-P1016NU-J1
Number of Branches			4	6	8	12	16
Power Source			208 / 230V, 1 phase, 60Hz				
Power Input (208/230V)	Cooling	kW	0.061 / 0.078	0.091 / 0.118	0.122 / 0.157	0.182 / 0.235	0.243 / 0.314
	Heating	kW	0.030 / 0.039	0.046 / 0.059	0.061 / 0.078	0.091 / 0.118	0.122 / 0.157
Current (208/230V)	Cooling	A	0.30 / 0.35	0.44 / 0.52	0.59 / 0.69	0.88 / 1.03	1.17 / 1.37
	Heating	A	0.15 / 0.18	0.22 / 0.26	0.30 / 0.35	0.44 / 0.52	0.59 / 0.69
External Finish			Galvanized steel plate (Lower part drain pan: Pre-coated galvanized sheets + powder coating)				
Dimensions	Height	In.	9-7/8				
	Width		23-1/2	23-1/2	23-1/2	35-7/8	44-11/16
	Depth		15-11/16	15-11/16	15-11/16	21-1/2	21-1/2
Net Weight		Lbs.	58	64	73	109	131
Refrigerant Pipe Dimensions	To Indoor Unit	Liquid Pipe (In.)	3/8				
		Gas Pipe (In.)	5/8				
Connectable Outdoor/ Heat Source Unit Capacity		Btu/h	72,000 to 120,000				
Indoor unit Capacity Connectable to One Branch			54,000				
Drain Pipe			3/4 NPT				
Sound Power Level (Measured in Anechoic Room)		Rated Operation dB(A)	59				
		Defrost dB(A)	71				
Sound Pressure Level (Measured in Anechoic Room)		Rated Operation dB(A)	40				
		Defrost dB(A)	53				

Total Downstream Capacity (Nominal cooling) (Btu/h)	Liquid (High Pressure)	Gas (Low Pressure)	Liquid Pipe
Less than 72,000	5/8 (Brazed)	3/4 (Brazed)	3/8 (Brazed)
Between 73,000 and 108,000	3/4 (Brazed)	7/8 (Brazed)	3/8 (Brazed)
Between 109,000 and 126,000	3/4 (Brazed)	1-1/8 (Brazed)	1/2 (Brazed)
Between 127,000 and 144,000	7/8 (Brazed)	1-1/8 (Brazed)	1/2 (Brazed)
Between 145,000 and 216,000	7/8 (Brazed)	1-1/8 (Brazed)	5/8 (Brazed)
Between 217,000 and 234,000	1-1/8 (Brazed)	1-1/8 (Brazed)	5/8 (Brazed)
Between 235,000 and 288,000	1-1/8 (Brazed)	1-3/8 (Brazed)	3/4 (Brazed)
Between 289,000 and 360,000	1-1/8 (Brazed)	1-5/8 (Brazed)	3/4 (Brazed)
Greater than 361,000	1-3/8 (Brazed)	1-5/8 (Brazed)	3/4 (Brazed)

SPECIFICATIONS: BC CONTROLLER

CMB-P-NU-JA1/KA1 (Main BC)

SPECIFICATIONS			MODEL NAMES			
			CMB-P108NU-JA1	CMB-P1012NU-JA1	CMB-P1016NU-JA1	CMB-P1016NU-KA1
Number of Branches			8	12	16	16
Power Source			208 / 230V, 1 phase, 60Hz			
Power Input (208/230V)	Cooling	kW	0.137 / 0.176	0.198 / 0.255	0.258 / 0.333	0.258 / 0.333
	Heating	kW	0.076 / 0.098	0.106 / 0.137	0.137 / 0.176	0.137 / 0.176
Current (208/230V)	Cooling	A	0.66 / 0.77	0.95 / 0.11	1.25 / 1.45	1.25 / 1.45
	Heating	A	0.37 / 0.43	0.52 / 0.60	0.66 / 0.77	0.66 / 0.77
External Finish			Galvanized steel plate (Lower part drain pan: Pre-coated galvanized sheets + powder coating)			
Dimensions	Height	In.	9-7/8			
	Width	In.	35-7/8	44-11/16	44-11/16	44-11/16
	Depth	In.	21-1/2			
Net Weight		Lbs.	106	133	150	153
Refrigerant Pipe Dimensions	To Indoor Unit	Liquid Pipe (In.)	3/8			
		Gas Pipe (In.)	5/8			
Connectable Outdoor / Heat Source Unit Capacity		Btu/h	72,000 to 336,000			72,000 to 432,000
Max. Connected Capacity to Sub BC Controllers		Btu/h	126,000			
Indoor unit Capacity Connectable to One Branch		Btu/h	54,000			
Drain Pipe			3/4 NPT			
Sound Power Level (Measured in Anechoic Room)		Rated Operation dB(A)	68			66
		Defrost dB(A)	74			73
Sound Pressure Level (Measured in Anechoic Room)		Rated Operation dB(A)	50			48
		Defrost dB(A)	56			55

CMB-P-NU-KB1 (Sub BC)

SPECIFICATIONS			MODEL NAMES	
			CMB-P104NU-KB1	CMB-P108NU-KB1
Number of Branches			4	8
Power Source			208 / 230V, 1 phase, 60Hz	
Power Input (208/230V)	Cooling	kW	0.061 / 0.078	0.122 / 0.157
	Heating	kW	0.030 / 0.039	0.061 / 0.078
Current (208/230V)	Cooling	A	0.30 / 0.35	0.59 / 0.69
	Heating	A	0.15 / 0.18	0.30 / 0.35
External Finish			Galvanized steel plate (Lower part drain pan: Pre-coated galvanized sheets + powder coating)	
Dimensions	Height	In.	9-7/8	
	Width	In.	23-1/2	
	Depth	In.	15-11/16	
Net Weight		Lbs.	51	69
Refrigerant Pipe Dimensions	To Indoor Unit	Liquid Pipe (In.)	3/8	
		Gas Pipe (In.)	5/8	
Maximum Connectable Sub BC Controllers			11	
Max. Connected Capacity for All Branches		Btu/h	126,000	
Indoor unit Capacity Connectable to One Branch		Btu/h	54,000	
Drain Pipe			3/4 NPT	
Sound Power Level (Measured in Anechoic Room)		Rated Operation dB(A)	59	
		Defrost dB(A)	71	
Sound Pressure Level (Measured in Anechoic Room)		Rated Operation dB(A)	40	
		Defrost dB(A)	53	

SPECIFICATIONS:
Y-SERIES (STANDARD EFFICIENCY)

PUHY-P** (T/Y) NU-A

SPECIFICATIONS			MODEL NAME				
VOLTAGES		208V /230V	PUHY-P72TNU-A (-BS)	PUHY-P96TNU-A (-BS)	PUHY-P120TNU-A (-BS)	PUHY-P144TNU-A (-BS)	PUHY-P168TNU-A (-BS)
		460V	PUHY-P72YNU-A (-BS)	PUHY-P96YNU-A (-BS)	PUHY-P120YNU-A (-BS)	PUHY-P144YNU-A (-BS)	PUHY-P168YNU-A (-BS)
Power Source			3-phase 3-wire 208-230 V ±10% 60 Hz				
			3-phase 3-wire 460 V ±10% 60 Hz				
Capacity (Nominal)	Cooling	Btu/h	72,000	96,000	120,000	144,000	168,000
	Heating	Btu/h	80,000	108,000	135,000	160,000	188,000
Electrical Supply	MCA	A	24-22	33-31	41-38	49-45	59-54
			11	15	19	22	27
	MOP	A	40-35	50-45	60-60	80-70	90-90
			15	20	30	35	45
	SCCR	A	5	5	5	5	5
	Recommended Fuse Size	A	30	40	50	60	70
			15	20	25	30	40
Fan	Type X Quantity		Propeller fan x 1	Propeller fan x 2	Propeller fan x 2	Propeller fan x 2	Propeller fan x 2
	Airflow Rate	CFM	6,000	6,700	7,750	9,200	10,600
	External Static Pressure		Selectable; 0, 0.12, 0.24, 0.32 in.WG; factory set to 0 in.WG				
Compressor	Type X Quantity		Inverter scroll hermetic compressor x 1				
	Operating Range		15% to 100%	15% to 100%	15% to 100%	15% to 100%	15% to 100%
	Lubricant		MEL32				
Refrigerant	Type		R410A				
External Finish			Pre-coated galvanized steel sheet (+powder coating for -BS type) <MUNSELL 3Y 7.8/1.1 or similar>				
Dimensions	Height	In.	71-10/16				
	Width		36-4/16	48-14/16	48-14/16	48-14/16	68-15/16
	Depth		29-3/1	29-3/16	29-3/16	29-3/16	29-3/16
Net Weight		lbs.	479	569	594	640	713
			512	605	629	675	748
Sound Pressure Level (Measured in Anechoic Room)		dB(A)	55.0/57.5	56.5/58.5	60.0/62.0	62.5/65.0	60.5/64.5
Sound Pressure Level (Measured in Anechoic Room)		dB(A)	74.0/76.5	75.5/77.5	80.0/81.0	83.0/84.0	79.0/83.5
Protection Devices	High Pressure		High pressure sensor, High pressure switch at 4.15 MPa (601 psi)				
	Inverter Circuit (Compressor/Fan)		Over-current protection				
Refrigerant Pipe Dimensions	Liquid (High Pressure) (Brazed)	In.	3/8 Brazed	3/8 Brazed (1/2 Brazed, the farthest pipe length >= 90 m)	3/8 Brazed (1/2 Brazed, the farthest pipe length >= 40 m)	1/2 Brazed	5/8 Brazed
	Gas (Low Pressure) (Brazed)		7/8 Brazed	7/8 Brazed	1-1/8 Brazed	1-1/8 Brazed	1-1/8 Brazed
Indoor Unit Connectable	Total capacity		50-130% of outdoor unit capacity				
	Model / Quantity		P05-P72/1-15	P05-P96/1-20	P05-P96/1-26	P05-P96/1-31	P05-P96/1-36
Guaranteed Operating Range *1	Cooling (Outdoor) *2		23-126°F (-5-52°C)				
	Heating (Outdoor) *3		-4-60°F (-20-15.5°C)				
Extended Operating Range *4	Heating (Outdoor)		-18-60°F (-28-15.5°C)				
Efficiency Ratings *5	EER (Ducted/ Non-Ducted)		13.1 / 13.5	13.4 / 14.6	12.3 / 13.3	12.2 / 12.6	11.2 / 11.7
	IEER (Ducted/ Non-Ducted)		24.8 / 31.5	26.2 / 32.6	23.6 / 28.8	23.2 / 29.6	23.4 / 29.8
	COP (Ducted/ Non-Ducted)		3.97 / 4.34	3.98 / 4.34	3.70 / 4.05	3.57 / 3.90	3.59 / 4.02

NOTES:

Nominal cooling conditions (Test conditions are based on AHRI 1230) Indoor: 80°FD.B./67°FW.B. (26.7°CD.B./19.4°CW.B.), Outdoor: 95°FD.B. (35°CD.B.)

Nominal heating conditions (Test conditions are based on AHRI 1230) Indoor: 70°FD.B. (21.1°CD.B.), Outdoor: 47°FD.B./43°FW.B. (8.3°CD.B./6.1°CW.B.)

1. Harsh weather environments may demand performance enhancing equipment. Ask your Mitsubishi Electric representative for more details about your region.
2. For details on extended cooling operation range down to -10° F DB, see Low Ambient Kit Submittal.
3. When applying product below -4°F, consult your design engineer for cold climate application best practices, including the use of a backup source for heating.
4. Unit will continue to operate in extended operating range, but capacity is not guaranteed.
5. Efficiency ratings are based on AHRI 1230 test method

PUHY-P** (T/Y) NU-A

SPECIFICATIONS			MODEL NAMES				
VOLTAGES		208V /230V	PUHY-P192TSNU-A (-BS)	PUHY-P216TSNU-A (-BS)	PUHY-P240TSNU-A (-BS)	PUHY-P264TSNU-A (-BS)	PUHY-P288TSNU-A (-BS)
			With 2 PUHY-P96TNU-A (-BS)	With 1 PUHY-P120TNU-A (-BS) and 1 PUHY-P96TNU-A (-BS)	With 2 PUHY-P120TNU-A (-BS)	With 2 PUHY-P96TNU-A (-BS) and 1 PUHY-P72TNU-A (-BS)	With PUHY-P120TNU-A (-BS) and PUHY-P96TNU-A (-BS) and PUHY-P72TNU-A (-BS)
		460V	PUHY-P192YSNU-A (-BS)	PUHY-P216YSNU-A (-BS)	PUHY-P240YSNU-A (-BS)	PUHY-P264YSNU-A (-BS)	PUHY-P288YSNU-A (-BS)
			With 2 PUHY-P96YNU-A (-BS)	With 1 PUHY-P120YNU-A (-BS) and 1 PUHY-P96YNU-A (-BS)	With 2 PUHY-P120YNU-A (-BS)	With 2 PUHY-P96YNU-A (-BS) and 1 PUHY-P72YNU-A (-BS)	With PUHY-P120YNU-A (-BS) and PUHY-P96YNU-A (-BS) and PUHY-P72YNU-A (-BS)
Power Source			3-phase 3-wire 208-230 V ±10% 60 Hz				
			3-phase 3-wire 460 V ±10% 60 Hz				
Capacity (Nominal)	Cooling	Btu/h	192,000	216,000	240,000	264,000	288,000
	Heating	Btu/h	216,000	243,000	270,000	296,000	323,000
Electrical Supply	MCA	A	Refer to: PUHY-P96TNU-A (-BS)	Refer to: PUHY-P120TNU-A (-BS) PUHY-P96TNU-A (-BS)	Refer to: PUHY-P120TNU-A (-BS)	Refer to: PUHY-P96TNU-A (-BS) PUHY-P72TNU-A (-BS)	Refer to: PUHY-P120TNU-A (-BS) PUHY-P96TNU-A (-BS) PUHY-P72TNU-A (-BS)
	MOP	A					
	SCCR	A	PUHY-P96YNU-A (-BS)	PUHY-P120YNU-A (-BS) PUHY-P96YNU-A (-BS)	PUHY-P120YNU-A (-BS)	PUHY-P96YNU-A (-BS) PUHY-P72YNU-A (-BS)	PUHY-P120YNU-A (-BS) PUHY-P96YNU-A (-BS) PUHY-P72YNU-A (-BS)
	Recommended Fuse Size	A					
Fan	Type X Quantity						
	Airflow Rate	CFM					
	External Static Pressure						
Compressor	Type X Quantity						
	Operating Range		7.5% to 100%	7.5% to 100%	7.5% to 100%	5% to 100%	5% to 100%
	Lubricant		Refer to: PUHY-P96TNU-A (-BS)	Refer to: PUHY-P120TNU-A (-BS) PUHY-P96TNU-A (-BS)	Refer to: PUHY-P120TNU-A (-BS)	Refer to: PUHY-P96TNU-A (-BS) PUHY-P72TNU-A (-BS)	Refer to: PUHY-P120TNU-A (-BS) PUHY-P96TNU-A (-BS) PUHY-P72TNU-A (-BS)
Refrigerant	Type						
External Finish							
Dimensions	Height	In.	PUHY-P96YNU-A (-BS)	PUHY-P120YNU-A (-BS) PUHY-P96YNU-A (-BS)	PUHY-P120YNU-A (-BS)	PUHY-P96YNU-A (-BS) PUHY-P72YNU-A (-BS)	PUHY-P120YNU-A (-BS) PUHY-P96YNU-A (-BS) PUHY-P72YNU-A (-BS)
	Width						
	Depth						
Net Weight		lbs.					
Sound Pressure Level (Measured in Anechoic Room)		dB(A)	60.0/62.0	62.0/64.0	63.5/65.5	61.0/63.0	62.5/65.0
Sound Pressure Level (Measured in Anechoic Room)		dB(A)	79.0/81.0	81.5/83.0	83.5/84.5	80.0/82.0	82.5/84.0
Protection Devices	High Pressure		High pressure sensor, High pressure switch at 4.15 MPa (601 psi)				
	Inverter Circuit (Compressor/Fan)		Over-current protection				
Refrigerant Pipe Dimensions	Liquid (High Pressure) (Brazed)	In.	5/8 Brazed	5/8 Brazed	5/8 Brazed	3/4 Brazed	3/4 Brazed
	Gas (Low Pressure) (Brazed)		1-1/8 Brazed	1-1/8 Brazed	1-1/8 Brazed	1-3/8 Brazed	1-3/8 Brazed
Indoor Unit Connectable	Total capacity		50-130% of outdoor unit capacity				
	Model / Quantity		P05-P96/1-41	P05-P96/2-46	P05-P96/2-50	P05-P96/2-50	P05-P96/2-50
Guaranteed Operating Range *1	Cooling (Outdoor) *2		23-126°F (-5-52°C)				
	Heating (Outdoor) *3		-4-60°F (-20-15.5°C)				
Extended Operating Range *4	Heating (Outdoor)		-18-60°F (-28-15.5°C)				
Efficiency Ratings *5	EER (Ducted/ Non-Ducted)		12.4 / 13.6	11.9 / 13.0	11.4 / 11.8	12.2 / 12.6	11.9 / 12.2
	IEER (Ducted/ Non-Ducted)		25.0 / 31.3	23.8 / 29.5	22.6 / 26.3	24.3 / 29.3	23.5 / 28.3
	COP (Ducted/ Non-Ducted)		3.70/ 4.06	3.57 / 3.93	3.45 / 3.59	3.66 / 3.84	3.58 / 3.78

NOTES:

Nominal cooling conditions (Test conditions are based on AHRI 1230) Indoor: 80°FD.B./67°FW.B. (26.7°CD.B./19.4°CW.B.), Outdoor: 95°FD.B. (35°CD.B.)

Nominal heating conditions (Test conditions are based on AHRI 1230) Indoor: 70°FD.B. (21.1°CD.B.), Outdoor: 47°FD.B./43°FW.B. (8.3°CD.B./6.1°CW.B.)

Twinning kit is required for combining multiple individual outdoor units in the field for PUHY-PT(Y)SNU combined systems.

1. Harsh weather environments may demand performance enhancing equipment. Ask your Mitsubishi Electric representative for more details about your region.
2. For details on extended cooling operation range down to -10° F DB, see Low Ambient Kit Submittal.
3. When applying product below -4°F, consult your design engineer for cold climate application best practices, including the use of a backup source for heating.
4. Unit will continue to operate in extended operating range, but capacity is not guaranteed.
5. Efficiency ratings are based on AHRI 1230 test method

PUHY-P** (T/Y) NU-A

SPECIFICATIONS			MODEL NAMES		
VOLTAGES		208V /230V	PUHY-P312TSNU-A (-BS)	PUHY-P336TSNU-A (-BS)	PUHY-P360TSNU-A (-BS)
			With 2 PUHY-P120TNU-A (-BS) and 1 PUHY-P72TNU-A (-BS)	With 2 PUHY-P120TNU-A (-BS) and 1 PUHY-P96TNU-A (-BS)	With 3 PUHY-P120TNU-A (-BS)
		460V	PUHY-P312YSNU-A (-BS)	PUHY-P336YSNU-A (-BS)	PUHY-P360YSNU-A (-BS)
			With 2 PUHY-P120YNU-A (-BS) and 1 PUHY-P72YNU-A (-BS)	With 2 PUHY-P120YNU-A (-BS) and 1 PUHY-P96YNU-A (-BS)	With 3 PUHY-P120YNU-A (-BS)
Power Source			3-phase 3-wire 208-230 V ±10% 60 Hz		
			3-phase 3-wire 460 V ±10% 60 Hz		
Capacity (Nominal)	Cooling	Btu/h	312,000	336,000	360,000
	Heating	Btu/h	350,000	378,000	405,000
Electrical Supply	MCA	A	Refer to: PUHY-P120TNU-A (-BS) PUHY-P72TNU-A (-BS)	Refer to: PUHY-P120TNU-A (-BS) PUHY-P96TNU-A (-BS)	Refer to: PUHY-P120TNU-A (-BS)
	MOP	A			
	SCCR	A	PUHY-P120YNU-A (-BS) PUHY-P72YNU-A (-BS)	PUHY-P120YNU-A (-BS) PUHY-P96YNU-A (-BS)	PUHY-P120YNU-A (-BS)
	Recommended Fuse Size	A			
Fan	Type X Quantity				
	Airflow Rate	CFM			
	External Static Pressure				
Compressor	Type X Quantity				
	Operating Range		5% to 100%	5% to 100%	5% to 100%
	Lubricant		Refer to: PUHY-P120TNU-A (-BS) PUHY-P72TNU-A (-BS)	Refer to: PUHY-P120TNU-A (-BS) PUHY-P96TNU-A (-BS)	Refer to: PUHY-P120TNU-A (-BS)
Refrigerant	Type				
External Finish					
Dimensions	Height	In.			
	Width		PUHY-P120YNU-A (-BS) PUHY-P72YNU-A (-BS)	PUHY-P120YNU-A (-BS) PUHY-P96YNU-A (-BS)	PUHY-P120YNU-A (-BS)
	Depth				
Net Weight		lbs.			
Sound Pressure Level (Measured in Anechoic Room)		dB(A)	64.0/66.0	64.0/66.0	65.0/67.0
Sound Pressure Level (Measured in Anechoic Room)		dB(A)	84.0/85.0	84.0/85.0	85.0/86.0
Protection Devices	High Pressure		High pressure sensor, High pressure switch at 4.15 MPa (601 psi)		
	Inverter Circuit (Compressor/Fan)		Over-current protection		
Refrigerant Pipe Dimensions	Liquid (High Pressure) (Brazed)	In.	3/4 Brazed		
	Gas (Low Pressure) (Brazed)		1-3/8 Brazed	1-5/8 Brazed	1-5/8 Brazed
Indoor Unit Connectable	Total capacity		50-130% of outdoor unit capacity		
	Model / Quantity		P05-P96/2-50		
Guaranteed Operating Range *1	Cooling (Outdoor) *2		23-126°F (-5-52°C)		
	Heating (Outdoor) *3		-4-60°F (-20-15.5°C)		
Extended Operating Range *4	Heating (Outdoor)		-18-60°F (-28-15.5°C)		
Efficiency Ratings *5	EER (Ducted/Non-Ducted)		11.6 / 11.7	11.7 / 11.8	11.3 / 11.5
	IEER (Ducted/ Non-Ducted)		22.7 / 26.7	23.2 / 26.6	22.4 / 25.7
	COP (Ducted/ Non-Ducted)		3.50 / 3.63	3.50 / 3.57	3.42 / 3.51

NOTES:

Nominal cooling conditions (Test conditions are based on AHRI 1230) Indoor: 80°FD.B./67°FW.B. (26.7°CD.B./19.4°CW.B.), Outdoor: 95°FD.B. (35°CD.B.)

Nominal heating conditions (Test conditions are based on AHRI 1230) Indoor: 70°FD.B. (21.1°CD.B.), Outdoor: 47°FD.B./43°FW.B. (8.3°CD.B./6.1°CW.B.)

Twinning kit is required for combining multiple individual outdoor units in the field for PUHY-PT(Y)SNU combined systems.

1. Harsh weather environments may demand performance enhancing equipment. Ask your Mitsubishi Electric representative for more details about your region.
2. For details on extended cooling operation range down to -10° F DB, see Low Ambient Kit Submittal.
3. When applying product below -4°F, consult your design engineer for cold climate application best practices, including the use of a backup source for heating.
4. Unit will continue to operate in extended operating range, but capacity is not guaranteed.
5. Efficiency ratings are based on AHRI 1230 test method

PUHY-P** (T/Y) NU-A

SPECIFICATIONS			MODEL NAMES		
VOLTAGES		208V /230V	PUHY-P384TSNU-A (-BS)	PUHY-P408TSNU-A (-BS)	PUHY-P432TSNU-A (-BS)
			With 1 PUHY-P144TNU-A (-BS) and 2 PUHY-P120TNU-A (-BS)	With 2 PUHY-P144TNU-A (-BS) and 1 PUHY-P120TNU-A (-BS)	With 3 PUHY-P144TNU-A (-BS)
		460V	PUHY-P384YSNU-A (-BS)	PUHY-P408YSNU-A (-BS)	PUHY-P432YSNU-A (-BS)
			With 1 PUHY-P144YNU-A (-BS) and 2 PUHY-P120YNU-A (-BS)	With 2 PUHY-P144YNU-A (-BS) and 1 PUHY-P120YNU-A (-BS)	With 3 PUHY-P144YNU-A (-BS)
Power Source			3-phase 3-wire 208-230 V ±10% 60 Hz		
			3-phase 3-wire 460 V ±10% 60 Hz		
Capacity (Nominal)	Cooling	Btu/h	384,000	408,000	432,000
	Heating	Btu/h	430,000	455,000	480,000
Electrical Supply	MCA	A	Refer to: PUHY-P144TNU-A (-BS) PUHY-P120TNU-A (-BS)	Refer to: PUHY-P144TNU-A (-BS) PUHY-P120TNU-A (-BS)	Refer to: PUHY-P144TNU-A (-BS)
	MOP	A			
	SCCR	A	PUHY-P144YNU-A (-BS) PUHY-P120YNU-A (-BS)	PUHY-P144YNU-A (-BS) PUHY-P120YNU-A (-BS)	PUHY-P144YNU-A (-BS)
	Recommended Fuse Size	A			
Fan	Type X Quantity				
	Airflow Rate	CFM			
	External Static Pressure				
Compressor	Type X Quantity				
	Operating Range		5% to 100%	5% to 100%	5% to 100%
	Lubricant		Refer to: PUHY-P144TNU-A (-BS) PUHY-P120TNU-A (-BS)	Refer to: PUHY-P144TNU-A (-BS) PUHY-P120TNU-A (-BS)	Refer to: PUHY-P144TNU-A (-BS)
Refrigerant	Type				
External Finish					
Dimensions	Height	In.			
	Width		PUHY-P144YNU-A (-BS) PUHY-P120YNU-A (-BS)	PUHY-P144YNU-A (-BS) PUHY-P120YNU-A (-BS)	PUHY-P144YNU-A (-BS)
	Depth				
Net Weight		lbs.			
Sound Pressure Level (Measured in Anechoic Room)		dB(A)	66.0/68.5	67.0/69.0	67.5/70.0
Sound Pressure Level (Measured in Anechoic Room)		dB(A)	86.5/87.5	87.0/88.0	88.0/89.0
Protection Devices	High Pressure		High pressure sensor, High pressure switch at 4.15 MPa (601 psi)		
	Inverter Circuit (Compressor/Fan)		Over-current protection		
Refrigerant Pipe Dimensions	Liquid (High Pressure) (Brazed)	In.	3/4 Brazed		
	Gas (Low Pressure) (Brazed)		1-5/8 Brazed		
Indoor Unit Connectable	Total capacity		50-130% of outdoor unit capacity		
	Model / Quantity		P05-P96/2-50	P05-P96/3-50	P05-P96/3-50
Guaranteed Operating Range *1	Cooling (Outdoor) *2		23-126°F (-5-52°C)		
	Heating (Outdoor) *3		-4-60°F (-20-15.5°C)		
Extended Operating Range *4	Heating (Outdoor)		-18-60°F (-28-15.5°C)		
Efficiency Ratings *5	EER (Ducted/Non-Ducted)		11.3 / 11.2	11.3 / 10.9	11.3 / 10.7
	IEER (Ducted/Non-Ducted)		22.3 / 25.8	22.2 / 25.8	22.1 / 25.9
	COP (Ducted/Non-Ducted)		3.39 / 3.45	3.35 / 3.38	3.31 / 3.32

NOTES:

Nominal cooling conditions (Test conditions are based on AHRI 1230) Indoor: 80°FD.B./67°FW.B. (26.7°CD.B./19.4°CW.B.), Outdoor: 95°FD.B. (35°CD.B.)

Nominal heating conditions (Test conditions are based on AHRI 1230) Indoor: 70°FD.B. (21.1°CD.B.), Outdoor: 47°FD.B./43°FW.B. (8.3°CD.B./6.1°CW.B.)

Twinning kit is required for combining multiple individual outdoor units in the field for PUHY-PT(Y)SNU combined systems.

1. Harsh weather environments may demand performance enhancing equipment. Ask your Mitsubishi Electric representative for more details about your region.
2. For details on extended cooling operation range down to -10° F DB, see Low Ambient Kit Submittal.
3. When applying product below -4°F, consult your design engineer for cold climate application best practices, including the use of a backup source for heating.
4. Unit will continue to operate in extended operating range, but capacity is not guaranteed.
5. Efficiency ratings are based on AHRI 1230 test method

PUHY-EP** (T/Y) NU-A

SPECIFICATIONS			MODEL NAMES		
VOLTAGES		208V /230V	PUHY-EP72TNU-A (-BS)	PUHY-EP96TNU-A (-BS)	PUHY-EP120TNU-A (-BS)
		460V	PUHY-EP72YNU-A (-BS)	PUHY-EP96YNU-A (-BS)	PUHY-EP120YNU-A (-BS)
Power Source			3-phase 3-wire 208-230 V ±10% 60 Hz		
			3-phase 3-wire 460 V ±10% 60 Hz		
Capacity (Nominal)	Cooling	Btu/h	72,000	96,000	120,000
	Heating	Btu/h	80,000	108,000	135,000
Electrical Supply	MCA	A	23-21	31-29	40-37
			10	14	18
	MOP	A	35-30	45-40	60-50
			15	20	25
	SCCR	A	5	5	5
	Recommended Fuse Size	A	30	40	50
			15	20	25
Fan	Type X Quantity		Propeller fan x 1	Propeller fan x 2	Propeller fan x 2
	Airflow Rate	CFM	6,000	6,700	7,750
	External Static Pressure		Selectable; 0, 0.12, 0.24, 0.32 in.WG; factory set to 0 in.WG		
Compressor	Type X Quantity		Inverter scroll hermetic compressor x 1		
	Operating Range		15% to 100%	15% to 100%	15% to 100%
	Lubricant		MEL32		
Refrigerant	Type		R410A		
External Finish			Pre-coated galvanized steel sheet (+powder coating for -BS type) <MUNSELL 3Y 7.8/1.1 or similar>		
Dimensions	Height	In.	71-5/8		
	Width		36-1/4	48-7/8	48-7/8
	Depth		29-3/16		
Net Weight		lbs.	512	622	633
			545	657	668
Sound Pressure Level (Measured in Anechoic Room)		dB(A)	55.0/57.0	56.0/58.5	59.5/61.5
Sound Pressure Level (Measured in Anechoic Room)		dB(A)	74.0/76.0	75.0/77.5	79.5/80.5
Protection Devices	High Pressure		High pressure sensor, High pressure switch at 4.15 MPa (601 psi)		
	Inverter Circuit (Compressor/Fan)		Over-current protection		
Refrigerant Pipe Dimensions	Liquid (High Pressure) (Brazed)	In.	3/8 Brazed	3/8 Brazed (1/2 Brazed, the farthest pipe length >= 90 m)	3/8 Brazed (1/2 Brazed, the farthest pipe length >= 40 m)
	Gas (Low Pressure) (Brazed)		7/8 Brazed	7/8 Brazed	1-1/8 Brazed
Indoor Unit Connectable	Total capacity		50-130% of outdoor unit capacity		
	Model / Quantity		P05-P72/1-15	P05-P96/1-20	P05-P96/1-26
Guaranteed Operating Range *1	Cooling (Outdoor) *2		23-126°F (-5-52°C)		
	Heating (Outdoor) *3		-13F-60°F (-25-15.5°C)		
Extended Operating Range *4	Heating (Outdoor)		-25-60°F (-31.5-15.5°C)		
Efficiency Ratings *5	EER (Ducted/Non-Ducted)		13.5 / 15.5	14.1 / 15.3	13.3 / 14.3
	IEER (Ducted/Non-Ducted)		25.3 / 32.5	26.7 / 34.0	25.4 / 30.8
	COP (Ducted/Non-Ducted)		4.05 / 4.57	4.04 / 4.39	3.80 / 4.21

NOTES:

Nominal cooling conditions (Test conditions are based on AHRI 1230) Indoor: 80°FD.B./67°FW.B. (26.7°CD.B./19.4°CW.B.), Outdoor: 95°FD.B. (35°CD.B.)

Nominal heating conditions (Test conditions are based on AHRI 1230) Indoor: 70°FD.B. (21.1°CD.B.), Outdoor: 47°FD.B./43°FW.B. (8.3°CD.B./6.1°CW.B.)

1. Harsh weather environments may demand performance enhancing equipment. Ask your Mitsubishi Electric representative for more details about your region.
2. For details on extended cooling operation range down to -10° F DB, see Low Ambient Kit Submittal.
3. When applying product below -4°F, consult your design engineer for cold climate application best practices, including the use of a backup source for heating.
4. Unit will continue to operate in extended operating range, but capacity is not guaranteed.
5. Efficiency ratings are based on AHRI 1230 test method

PUHY-EP** (T/Y) NU-A

SPECIFICATIONS			MODEL NAMES		
VOLTAGES		208V /230V	PUHY-EP144TNU-A (-BS)	PUHY-EP168TNU-A (-BS)	PUHY-EP192TNU-A (-BS)
		460V	PUHY-EP144YNU-A (-BS)	PUHY-EP168YNU-A (-BS)	PUHY-EP192YNU-A (-BS)
Power Source			3-phase 3-wire 208-230 V ±10% 60 Hz		
			3-phase 3-wire 460 V ±10% 60 Hz		
Capacity (Nominal)	Cooling	Btu/h	144,000	168,000	192,000
	Heating	Btu/h	160,000	188,000	215,000
Electrical Supply	MCA	A	47-44	56-51	68-62
			21	25	31
	MOP	A	70-70	90-80	110-100
			35	40	40
	SCCR	A	5	5	5
	Recommended Fuse Size	A	60	70	70
			30	40	40
Fan	Type X Quantity		Propeller fan x 2		
	Airflow Rate	CFM	9,200	10,600	12,700
	External Static Pressure		Selectable; 0, 0.12, 0.24, 0.32 in.WG; factory set to 0 in.WG		
Compressor	Type X Quantity		Inverter scroll hermetic compressor x 1		
	Operating Range		15% to 100%	15% to 100%	15% to 100%
	Lubricant		MEL32		
Refrigerant	Type		R410A		
External Finish			Pre-coated galvanized steel sheet (+powder coating for -BS type) <MUNSELL 3Y 7.8/1.1 or similar>		
Dimensions	Height	In.	71-5/8		
	Width		48-7/8	68-15/16	68-15/16
	Depth		29-3/16		
Net Weight		lbs.	680	757	757
			715	788	788
Sound Pressure Level (Measured in Anechoic Room)		dB(A)	62.0/64.5	60.0/61.5	61.5/63.5
Sound Pressure Level (Measured in Anechoic Room)		dB(A)	82.5/83.5	78.5/80.5	80.0/82.5
Protection Devices	High Pressure		High pressure sensor, High pressure switch at 4.15 MPa (601 psi)		
	Inverter Circuit (Compressor/Fan)		Over-current protection		
Refrigerant Pipe Dimensions	Liquid (High Pressure) (Brazed)	In.	1/2 Brazed	5/8 Brazed	5/8 Brazed
	Gas (Low Pressure) (Brazed)		1-1/8 Brazed	1-1/8 Brazed	1-1/8 Brazed
Indoor Unit Connectable	Total capacity		50-130% of outdoor unit capacity		
	Model / Quantity		P05-P96/1-31	P05-P96/1-36	P05-P96/1-41
Guaranteed Operating Range *1	Cooling (Outdoor) *2		23-126°F (-5-52°C)		
	Heating (Outdoor) *3		-13F-60°F (-25-15.5°C)		
Extended Operating Range *4	Heating (Outdoor)		-25-60°F (-31.5-15.5°C)		
Efficiency Ratings *5	EER (Ducted/Non-Ducted)		12.4 / 13.4	11.7 / 12.4	10.7 / 11.7
	IEER (Ducted/Non-Ducted)		24.6 / 30.4	24.0 / 31.2	23.1 / 30.0
	COP (Ducted/Non-Ducted)		3.68 / 4.01	3.61 / 4.11	3.51 / 4.04

NOTES:

Nominal cooling conditions (Test conditions are based on AHRI 1230) Indoor: 80°FD.B./67°FW.B. (26.7°CD.B./19.4°CW.B.), Outdoor: 95°FD.B. (35°CD.B.)

Nominal heating conditions (Test conditions are based on AHRI 1230) Indoor: 70°FD.B. (21.1°CD.B.), Outdoor: 47°FD.B./43°FW.B. (8.3°CD.B./6.1°CW.B.)

1. Harsh weather environments may demand performance enhancing equipment. Ask your Mitsubishi Electric representative for more details about your region.
2. For details on extended cooling operation range down to -10° F DB, see Low Ambient Kit Submittal.
3. When applying product below -4°F, consult your design engineer for cold climate application best practices, including the use of a backup source for heating.
4. Unit will continue to operate in extended operating range, but capacity is not guaranteed.
5. Efficiency ratings are based on AHRI 1230 test method

PURY-EP** (T/Y) NU-A

SPECIFICATIONS			MODEL NAMES	
VOLTAGES		208V /230V	PUHY-EP216TNU-A (-BS)	PUHY-EP240TNU-A (-BS)
		460V	PUHY-EP216YNU-A (-BS)	PUHY-EP240YNU-A (-BS)
Power Source			3-phase 3-wire 208-230 V ±10% 60 Hz	
			3-phase 3-wire 460 V ±10% 60 Hz	
Capacity (Nominal)	Cooling	Btu/h	216,000	240,000
	Heating	Btu/h	243,000	250,000
Electrical Supply	MCA	A	71/65	79/73
			32	36
	MOP	A	110/110	125/110
			50	60
	SCCR	A	5	
	Recommended Fuse Size	A	80/80	90/90
			40	50
Fan	Type X Quantity		Propeller fan x 2	
	Airflow Rate	CFM	14,100	
	External Static Pressure		Selectable; 0, 0.12, 0.24, 0.32 in.WG; factory set to 0 in.WG	
Compressor	Type X Quantity		Inverter scroll hermetic compressor x 1	Inverter scroll hermetic compressor
	Operating Range		15% to 100%	15% to 100%
	Lubricant		MEL32	
Refrigerant	Type		R410A	
External Finish			"Pre-coated galvanized steel sheet (+powder coating for -BS type) <MUNSELL 5Y 8/1>"	
Dimensions	Height	In.	71-5/8	
	Width		68-15/16	
	Depth		29-3/16	
Net Weight		lbs.	874 (396)	
			904 (410)	
Sound Pressure Level (Measured in Anechoic Room)		dB(A)	66.5/67.5	67.5/68.0
Sound Pressure Level (Measured in Anechoic Room)		dB(A)	85.5/86.5	86.5/87.0
Protection Devices	High Pressure		High pressure sensor, High pressure switch at 4.15 MPa (601 psi)	
	Inverter Circuit (Compressor/Fan)		Over-heat protection, Over-current protection	
Refrigerant Pipe Dimensions	Liquid (High Pressure) (Brazed)	In.	5/8 (15.88) Brazed	
	Gas (Low Pressure) (Brazed)		1-1/8 (28.58) Brazed	
Indoor Unit Connectable	Total capacity		50-150% of outdoor unit capacity	
	Model / Quantity		P05-P96/2-46	P05-P96/2-50
Guaranteed Operating Range *1	Cooling (Outdoor) *2		23-126°F (-5-52°C)	
	Heating (Outdoor) *3		-4-60°F (-20-15.5°C)	
Extended Operating Range *4	Heating (Outdoor)		-25-60°F (-31.5-15.5°C)	
Efficiency Ratings *5	EER (Ducted/Non-Ducted)		11.0 / 11.9	10.6 / 10.6
	IEER (Ducted/Non-Ducted)		20.5 / 26.0	20.3 / 24.1
	COP (Ducted/Non-Ducted)		3.3 / 3.72	3.25 / 3.5

NOTES:

Nominal cooling conditions (Test conditions are based on AHRI 1230) Indoor: 80°FD.B./67°FW.B. (26.7°CD.B./19.4°CW.B.), Outdoor: 95°FD.B. (35°CD.B.)

Nominal heating conditions (Test conditions are based on AHRI 1230) Indoor: 70°FD.B. (21.1°CD.B.), Outdoor: 47°FD.B./43°FW.B. (8.3°CD.B./6.1°CW.B.)

1. Harsh weather environments may demand performance enhancing equipment. Ask your Mitsubishi Electric representative for more details about your region.
2. For details on extended cooling operation range down to -10° F DB, see Low Ambient Kit Submittal.
3. When applying product below -4°F, consult your design engineer for cold climate application best practices, including the use of a backup source for heating.
4. Unit will continue to operate in extended operating range, but capacity is not guaranteed.
5. Efficiency ratings are based on AHRI 1230 test method

PUHY-EP** (T/Y) NU-A

SPECIFICATIONS			MODEL NAMES			
VOLTAGES		208V /230V	PUHY-EP192TSNU-A (-BS)	PUHY-EP216TSNU-A (-BS)	PUHY-EP240TSNU-A (-BS)	PUHY-EP264TSNU-A (-BS)
			With 2 PUHY-EP96TNU-A (-BS)	With 1 PUHY-EP120TNU-A (-BS) and 1 PUHY-EP96TNU-A (-BS)	With 2 PUHY-EP120TNU-A (-BS)	With 2 PUHY-EP96TNU-A (-BS) and 1 PUHY-EP72TNU-A (-BS)
		460V	PUHY-EP192YSNU-A (-BS)	PUHY-EP216YSNU-A (-BS)	PUHY-EP240YSNU-A (-BS)	PUHY-EP264YSNU-A (-BS)
			With 2 PUHY-EP96YNU-A (-BS)	With 1 PUHY-EP120YNU-A (-BS) and 1 PUHY-EP96YNU-A (-BS)	With 2 PUHY-EP120YNU-A (-BS)	With 2 PUHY-EP96YNU-A (-BS) and 1 PUHY-EP72YNU-A (-BS)
Power Source			3-phase 3-wire 208-230 V ±10% 60 Hz			
			3-phase 3-wire 460 V ±10% 60 Hz			
Capacity (Nominal)	Cooling	Btu/h	192,000	216,000	240,000	264,000
	Heating	Btu/h	216,000	243,000	270,000	296,000
Electrical Supply	MCA	A	Refer to: PUHY-EP96TNU-A (-BS)	Refer to: PUHY-EP120TNU-A (-BS) PUHY-EP96TNU-A (-BS)	Refer to: PUHY-EP120TNU-A (-BS)	Refer to: PUHY-EP96TNU-A (-BS) PUHY-EP72TNU-A (-BS)
	MOP	A				
	SCCR	A	PUHY-EP96YNU-A (-BS)	PUHY-EP120YNU-A (-BS) PUHY-EP96YNU-A (-BS)	PUHY-EP120YNU-A (-BS)	PUHY-EP96YNU-A (-BS) PUHY-EP72YNU-A (-BS)
	Recommended Fuse Size	A				
Fan	Type X Quantity					
	Airflow Rate	CFM				
	External Static Pressure					
Compressor	Type X Quantity					
	Operating Range		7.5% to 100%	7.5% to 100%	7.5% to 100%	5% to 100%
	Lubricant		Refer to: PUHY-EP96TNU-A (-BS)	Refer to: PUHY-EP120TNU-A (-BS) PUHY-EP96TNU-A (-BS)	Refer to: PUHY-EP120TNU-A (-BS)	Refer to: PUHY-EP96TNU-A (-BS) PUHY-EP72TNU-A (-BS)
Refrigerant	Type					
External Finish						
Dimensions	Height	In.				
	Width					
	Depth		PUHY-EP96YNU-A (-BS)	PUHY-EP120YNU-A (-BS) PUHY-EP96YNU-A (-BS)	PUHY-EP120YNU-A (-BS)	PUHY-EP96YNU-A (-BS) PUHY-EP72YNU-A (-BS)
Net Weight		lbs.				
Sound Pressure Level (Measured in Anechoic Room)		dB(A)	59.5/62.0	61.5/63.5	63.0/65.0	60.5/63.0
Sound Pressure Level (Measured in Anechoic Room)		dB(A)	78.5/81.0	81.0/82.5	83.0/84.0	79.5/82.0
Protection Devices	High Pressure		High pressure sensor, High pressure switch at 4.15 MPa (601 psi)			
	Inverter Circuit (Compressor/Fan)		Over-current protection			
Refrigerant Pipe Dimensions	Liquid (High Pressure) (Brazed)	In.	5/8 Brazed	5/8 Brazed	5/8 Brazed	3/4 Brazed
	Gas (Low Pressure) (Brazed)		1-1/8 Brazed	1-1/8 Brazed	1-1/8 Brazed	1-3/8 Brazed
Indoor Unit Connectable	Total capacity		50~130% of outdoor unit capacity			
	Model / Quantity		P05~P96/1~41	P05~P96/2~46	P05~P96/2~50	P05~P96/2~50
Guaranteed Operating Range *1	Cooling (Outdoor) *2		23~126°F (-5~52°C)			
	Heating (Outdoor) *3		-13F~60°F (-25~15.5°C)			
Extended Operating Range *4	Heating (Outdoor)		-25~60°F (-31.5~15.5°C)			
Efficiency Ratings *5	EER (Ducted/Non-Ducted)		13.0 / 14.3	12.7 / 13.8	12.3 / 12.5	12.7 / 13.4
	IEER (Ducted/Non-Ducted)		25.3 / 32.6	24.8 / 31.1	24.2 / 27.7	24.6 / 30.0
	COP (Ducted/Non-Ducted)		3.75 / 4.11	3.65 / 4.03	3.54 / 3.73	3.72 / 3.94

NOTES:

Nominal cooling conditions (Test conditions are based on AHRI 1230) Indoor: 80°FD.B./67°FW.B. (26.7°CD.B./19.4°CW.B.), Outdoor: 95°FD.B. (35°CD.B.)

Nominal heating conditions (Test conditions are based on AHRI 1230) Indoor: 70°FD.B. (21.1°CD.B.), Outdoor: 47°FD.B./43°FW.B. (8.3°CD.B./6.1°CW.B.)

Twinning kit is required for combining multiple individual outdoor units in the field for
PUHY-EPT(Y)SNU combined systems.

1. Harsh weather environments may demand performance enhancing equipment. Ask your Mitsubishi Electric representative for more details about your region.
2. For details on extended cooling operation range down to -10° F DB, see Low Ambient Kit Submittal.
3. When applying product below -4°F, consult your design engineer for cold climate application best practices, including the use of a backup source for heating.
4. Unit will continue to operate in extended operating range, but capacity is not guaranteed.
5. Efficiency ratings are based on AHRI 1230 test method

PUHY-EP** (T/Y) NU-A

SPECIFICATIONS			MODEL NAMES			
VOLTAGES		208V /230V	PUHY-EP288TSNU-A (-BS)	PUHY-EP312TSNU-A (-BS)	PUHY-EP336TSNU-A (-BS)	PUHY-EP360TSNU-A (-BS)
			With PUHY-EP120TNU-A (-BS) and PUHY-EP96TNU-A (-BS) and PUHY-EP72TNU-A (-BS)	With 2 PUHY-EP120TNU-A (-BS) and 1 PUHY-EP72TNU-A (-BS)	With 2 PUHY-EP120TNU-A (-BS) and 1 PUHY-EP96TNU-A (-BS)	With 3 PUHY-EP120TNU-A (-BS)
		460V	PUHY-EP288YSNU-A (-BS)	PUHY-EP312YSNU-A (-BS)	PUHY-EP336YSNU-A (-BS)	PUHY-EP360YSNU-A (-BS)
			With PUHY-EP120YNU-A (-BS) and PUHY-EP96YNU-A (-BS) and PUHY-EP72YNU-A (-BS)	With 2 PUHY-EP120YNU-A (-BS) and 1 PUHY-EP72YNU-A (-BS)	With 2 PUHY-EP120YNU-A (-BS) and 1 PUHY-EP96YNU-A (-BS)	With 3 PUHY-EP120YNU-A (-BS)
Power Source			3-phase 3-wire 208-230 V ±10% 60 Hz			
			3-phase 3-wire 460 V ±10% 60 Hz			
Capacity (Nominal)	Cooling	Btu/h	288,000	312,000	336,000	360,000
	Heating	Btu/h	323,000	350,000	378,000	405,000
Electrical Supply	MCA	A	Refer to: PUHY-EP120TNU-A (-BS) PUHY-EP96TNU-A (-BS) PUHY-EP72TNU-A (-BS)	Refer to: PUHY-EP120TNU-A (-BS) PUHY-EP72TNU-A (-BS)	Refer to: PUHY-EP120TNU-A (-BS) PUHY-EP96TNU-A (-BS)	Refer to: PUHY-EP120TNU-A (-BS)
	MOP	A				
	SCCR	A	PUHY-EP120YNU-A (-BS) PUHY-EP96YNU-A (-BS) PUHY-EP72YNU-A (-BS)	PUHY-EP120YNU-A (-BS) PUHY-EP72YNU-A (-BS)	PUHY-EP120YNU-A (-BS) PUHY-EP96YNU-A (-BS)	PUHY-EP120YNU-A (-BS)
	Recommended Fuse Size	A				
Fan	Type X Quantity					
	Airflow Rate	CFM				
	External Static Pressure					
Compressor	Type X Quantity					
	Operating Range		5% to 100%	5% to 100%	5% to 100%	5% to 100%
	Lubricant		Refer to: PUHY-EP120TNU-A (-BS) PUHY-EP96TNU-A (-BS) PUHY-EP72TNU-A (-BS)	Refer to: PUHY-EP120TNU-A (-BS) PUHY-EP72TNU-A (-BS)	Refer to: PUHY-EP120TNU-A (-BS) PUHY-EP96TNU-A (-BS)	Refer to: PUHY-EP120TNU-A (-BS)
Refrigerant	Type					
External Finish						
Dimensions	Height	In.				
	Width		PUHY-EP120YNU-A (-BS) PUHY-EP96YNU-A (-BS) PUHY-EP72YNU-A (-BS)	PUHY-EP120YNU-A (-BS) PUHY-EP72YNU-A (-BS)	PUHY-EP120YNU-A (-BS) PUHY-EP96YNU-A (-BS)	PUHY-EP120YNU-A (-BS)
	Depth					
Net Weight		lbs.				
Sound Pressure Level (Measured in Anechoic Room)		dB(A)	62.5/64.5	63.5/65.5	63.5/65.5	64.5/66.5
Sound Pressure Level (Measured in Anechoic Room)		dB(A)	82.0/83.5	83.5/84.5	83.5/84.5	84.5/85.5
Protection Devices	High Pressure		High pressure sensor, High pressure switch at 4.15 MPa (601 psi)			
	Inverter Circuit (Compressor/Fan)		Over-current protection			
Refrigerant Pipe Dimensions	Liquid (High Pressure) (Brazed)	In.	3/4 Brazed			
	Gas (Low Pressure) (Brazed)		1-3/8 Brazed	1-3/8 Brazed	1-5/8 Brazed	1-5/8 Brazed
Indoor Unit Connectable	Total capacity		50-130% of outdoor unit capacity			
	Model / Quantity		P05-P96/2-50			
Guaranteed Operating Range *1	Cooling (Outdoor) *2		23-126°F (-5-52°C)			
	Heating (Outdoor) *3		-13F~60°F (-25-15.5°C)			
Extended Operating Range *4	Heating (Outdoor)		-25-60°F (-31.5-15.5°C)			
Efficiency Ratings *5	EER (Ducted/Non-Ducted)		12.4 / 13.2	12.2 / 12.6	12.4 / 12.3	12.2 / 12.1
	IEER (Ducted/Non-Ducted)		24.2 / 29.3	23.9 / 27.7	24.3 / 27.6	24.0 / 26.9
	COP (Ducted/Non-Ducted)		3.65 / 3.91	3.58 / 3.78	3.58 / 3.68	3.51 / 3.65

NOTES:

Nominal cooling conditions (Test conditions are based on AHRI 1230) Indoor: 80°FD.B./67°FW.B. (26.7°CD.B./19.4°CW.B.), Outdoor: 95°FD.B. (35°CD.B.)

Nominal heating conditions (Test conditions are based on AHRI 1230) Indoor: 70°FD.B. (21.1°CD.B.), Outdoor: 47°FD.B./43°FW.B. (8.3°CD.B./6.1°CW.B.)

Twinning kit is required for combining multiple individual outdoor units in the field for PUHY-EPT(Y)SNU combined systems.

1. Harsh weather environments may demand performance enhancing equipment. Ask your Mitsubishi Electric representative for more details about your region.
2. For details on extended cooling operation range down to -10° F DB, see Low Ambient Kit Submittal.
3. When applying product below -4°F, consult your design engineer for cold climate application best practices, including the use of a backup source for heating.
4. Unit will continue to operate in extended operating range, but capacity is not guaranteed.
5. Efficiency ratings are based on AHRI 1230 test method

PUHY-EP** (T/Y) NU-A

SPECIFICATIONS			MODEL NAMES		
VOLTAGES		208V /230V	PUHY-EP384TSNU-A (-BS)	PUHY-EP408TSNU-A (-BS)	PUHY-EP432TSNU-A(-BS)
			With 1 PUHY-EP144TNU-A (-BS) and 2 PUHY-EP120TNU-A (-BS)	With 2 PUHY-EP144TNU-A (-BS) and 1 PUHY-EP120TNU-A (-BS)	With 3 PUHY-EP144TNU-A (-BS)
		460V	PUHY-EP384YSNU-A (-BS)	PUHY-EP408YSNU-A (-BS)	PUHY-EP432YSNU-A (-BS)
			With 1 PUHY-EP144YNU-A (-BS) and 2 PUHY-EP120YNU-A (-BS)	With 2 PUHY-EP144YNU-A (-BS) and 1 PUHY-EP120YNU-A (-BS)	With 3 PUHY-EP144YNU-A (-BS)
Power Source			3-phase 3-wire 208-230 V ±10% 60 Hz		
			3-phase 3-wire 460 V ±10% 60 Hz		
Capacity (Nominal)	Cooling	Btu/h	384,000	408,000	432,000
	Heating	Btu/h	430,000	455,000	480,000
Electrical Supply	MCA	A	Refer to: PUHY-EP144TNU-A (-BS) PUHY-EP120TNU-A (-BS)	Refer to: PUHY-EP144TNU-A (-BS) PUHY-EP120TNU-A (-BS)	Refer to: PUHY-EP144TNU-A (-BS)
	MOP	A			
	SCCR	A	PUHY-EP144YNU-A (-BS) PUHY-EP120YNU-A (-BS)	PUHY-EP144YNU-A (-BS) PUHY-EP120YNU-A (-BS)	PUHY-EP144YNU-A (-BS)
	Recommended Fuse Size	A			
Fan	Type X Quantity				
	Airflow Rate	CFM			
	External Static Pressure				
Compressor	Type X Quantity				
	Operating Range		5% to 100%	5% to 100%	5% to 100%
	Lubricant		Refer to: PUHY-EP144TNU-A (-BS) PUHY-EP120TNU-A (-BS)	Refer to: PUHY-EP144TNU-A (-BS) PUHY-EP120TNU-A (-BS)	Refer to: PUHY-EP144TNU-A (-BS)
Refrigerant	Type				
External Finish					
Dimensions	Height	In.			
	Width		PUHY-EP144YNU-A (-BS) PUHY-EP120YNU-A (-BS)	PUHY-EP144YNU-A (-BS) PUHY-EP120YNU-A (-BS)	PUHY-EP144YNU-A (-BS)
	Depth				
Net Weight		lbs.			
Sound Pressure Level (Measured in Anechoic Room)		dB(A)	65.5/68.0	66.5/68.5	67.0/69.5
Sound Pressure Level (Measured in Anechoic Room)		dB(A)	86.0/87.0	86.5/87.5	87.5/88.5
Protection Devices	High Pressure		High pressure sensor, High pressure switch at 4.15 MPa (601 psi)		
	Inverter Circuit (Compressor/Fan)		Over-current protection		
Refrigerant Pipe Dimensions	Liquid (High Pressure) (Brazed)	In.	3/4 Brazed		
	Gas (Low Pressure) (Brazed)		1-5/8 Brazed		
Indoor Unit Connectable	Total capacity		50-130% of outdoor unit capacity		
	Model / Quantity		P05-P96/2-50	P05-P96/3-50	P05-P96/3-50
Guaranteed Operating Range *1	Cooling (Outdoor) *2		23-126°F (-5-52°C)		
	Heating (Outdoor) *3		-13F-60°F (-25-15.5°C)		
Extended Operating Range *4	Heating (Outdoor)		-25-60°F (-31.5-15.5°C)		
Efficiency Ratings *5	EER (Ducted/Non-Ducted)		11.9 / 11.8	11.7 / 11.4	11.4 / 11.1
	IEER (Ducted/Non-Ducted)		23.8 / 26.6	23.5 / 26.3	23.3 / 25.9
	COP (Ducted/Non-Ducted)		3.48 / 3.57	3.45 / 3.49	3.41 / 3.41

NOTES:

Nominal cooling conditions (Test conditions are based on AHRI 1230) Indoor: 80°FD.B./67°FW.B. (26.7°CD.B./19.4°CW.B.), Outdoor: 95°FD.B. (35°CD.B.)

Nominal heating conditions (Test conditions are based on AHRI 1230) Indoor: 70°FD.B. (21.1°CD.B.), Outdoor: 47°FD.B./43°FW.B. (8.3°CD.B./6.1°CW.B.)

Twinning kit is required for combining multiple individual outdoor units in the field for PUHY-EPT(Y)SNU combined systems.

1. Harsh weather environments may demand performance enhancing equipment. Ask your Mitsubishi Electric representative for more details about your region.
2. For details on extended cooling operation range down to -10° F DB, see Low Ambient Kit Submittal.
3. When applying product below -4°F, consult your design engineer for cold climate application best practices, including the use of a backup source for heating.
4. Unit will continue to operate in extended operating range, but capacity is not guaranteed.
5. Efficiency ratings are based on AHRI 1230 test method

PUHY-HP** (T/Y) NU-A

SPECIFICATION			MODEL NAMES		
VOLTAGES		208V /230V	PUHY-HP72TNU-A	PUHY-HP96TNU-A	PUHY-HP120TNU-A
		460V	PUHY-HP72YNU-A	PUHY-HP96YNU-A	PUHY-HP120YNU-A
Power Source			3-phase 3-wire 208-230 V ±10% 60 Hz		
			3-phase 3-wire 460 V ±10% 60 Hz		
Capacity (Nominal)	Cooling	Btu/h	72,000	96,000	120,000
	Heating	Btu/h	80,000	108,000	135,000
Electrical Supply	MCA	A	38-35	43-40	47-43
			17	20	21
	MOP	A	60-50	70-60	70-60
			25	30	35
	SCCR	A	5	5	5
	Recommended Fuse Size	A	55	70	70
			25	30	35
Fan	Type X Quantity		Propeller fan x 2	Propeller fan x 2	Propeller fan x 2
	Airflow Rate	CFM	6,700	7,400	7,750
	External Static Pressure		Selectable; 0, 0.12, 0.24, 0.32 in.WG; factory set to 0 in.WG		
Compressor	Type X Quantity		Inverter scroll hermetic compressor x 1		
	Operating Range		15% to 100%	15% to 100%	15% to 100%
	Lubricant		MEL46		
Refrigerant	Type		R410A		
External Finish			Pre-coated galvanized steel sheet <MUNSELL 3Y 7.8/1.1 or similar>		
Dimensions	Height	In.	71-5/8		
	Width	In.	48-7/8		
	Depth	In.	29-3/16		
Net Weight		lbs.	609	653	655
			644	688	691
Sound Pressure Level (Measured in Anechoic Room)		dB(A)	55.0/57.0	56.0/58.5	59.5/61.5
Sound Pressure Level (Measured in Anechoic Room)		dB(A)	74.0/76.0	75.0/77.5	79.5/80.5
Protection Devices	High Pressure		Over-current protection		
	Inverter Circuit (Compressor/ Fan)		Over-current protection		
Refrigerant Pipe Dimensions	Liquid (High Pressure) (Brazed)	In.	3/8 Brazed	3/8 Brazed (1/2 Brazed, the farthest pipe length >= 90 m)	3/8 Brazed (1/2 Brazed, the farthest pipe length >= 40 m)
	Gas (Low Pressure) (Brazed)	In.	7/8 Brazed	7/8 Brazed	1-1/8 Brazed
Indoor Unit Connectable	Total capacity		50-130% of outdoor unit capacity		
	Model / Quantity		P05-P72/1-15	P05-P96/1-20	P05-P96/1-26
Guaranteed Operating Range *1	Cooling (Outdoor) *2		23-126°F (-5-52°C)		
	Heating (Outdoor) *3		-22-60°F (-30-15.5°C)		
Extended Operating Range *4	Heating (Outdoor)		-31-60°F (-35-15.5°C)		
Efficiency Ratings *5	EER (Ducted/Non-Ducted)		11.9 / 13.1	13.8 / 15.1	12.5 / 14.1
	IEER (Ducted/Non-Ducted)		21.1 / 27.2	19.8 / 26.7	19.7 / 24.5
	COP (Ducted/Non-Ducted)		4.03 / 4.39	4 / 4.35	3.76 / 4.26

NOTES:

Nominal cooling conditions (Test conditions are based on AHRI 1230) Indoor: 80°FD.B./67°FW.B. (26.7°CD.B./19.4°CW.B.), Outdoor: 95°FD.B. (35°CD.B.)

Nominal heating conditions (Test conditions are based on AHRI 1230) Indoor: 70°FD.B. (21.1°CD.B.), Outdoor: 47°FD.B./43°FW.B. (8.3°CD.B./6.1°CW.B.)

Twinning kit is required for combining multiple individual outdoor units in the field for PUHY-EPT(Y)SNU combined systems.

1. Harsh weather environments may demand performance enhancing equipment. Ask your Mitsubishi Electric representative for more details about your region.
2. For details on extended cooling operation range down to -10° F DB, see Low Ambient Kit Submittal.
3. When applying product below -4°F, consult your design engineer for cold climate application best practices, including the use of a backup source for heating.
4. Unit will continue to operate in extended operating range, but capacity is not guaranteed.
5. Efficiency ratings are based on AHRI 1230 test method

PUHY-HP** (T/Y) NU-A

SPECIFICATION			MODEL NAMES		
VOLTAGES		208V /230V	PUHY-HP144TSNU-A	PUHY-HP192TSNU-A	PUHY-HP240TSNU-A
			With 2 PUHY-HP72TNU-A	With 2 PUHY-HP96TNU-A	With 2 PUHY-HP120TNU-A
		460V	PUHY-HP144YSNU-A	PUHY-HP192YSNU-A	PUHY-HP240YSNU-A
			With 2 PUHY-HP72YNU-A	With 2 PUHY-HP96YNU-A	With 2 PUHY-HP120YNU-A
Power Source			3-phase 3-wire 208-230 V ±10% 60 Hz		
			3-phase 3-wire 460 V ±10% 60 Hz		
Capacity (Nominal)	Cooling	Btu/h	144,000	192,000	240,000
	Heating	Btu/h	160,000	215,000	270,000
Electrical Supply	MCA	A	Refer to: PUHY-HP72TNU-A	Refer to: PUHY-HP96TNU-A	Refer to: PUHY-HP120TNU-A
	MOP	A			
	SCCR	A	PUHY-HP72YNU-A	PUHY-HP96YNU-A	PUHY-HP120YNU-A
	Recommended Fuse Size	A			
Fan	Type X Quantity				
	Airflow Rate	CFM			
	External Static Pressure				
Compressor	Type X Quantity				
	Operating Range		7.5% to 100%	7.5% to 100%	7.5% to 100%
	Lubricant		Refer to: PUHY-HP72TNU-A	Refer to: PUHY-HP96TNU-A	Refer to: PUHY-HP120TNU-A
Refrigerant	Type				
External Finish					
Dimensions	Height	In.			
	Width	In.	PUHY-HP72YNU-A	PUHY-HP96YNU-A	PUHY-HP120YNU-A
	Depth	In.			
Net Weight		lbs.			
Sound Pressure Level (Measured in Anechoic Room)		dB(A)	58.5/60.5	59.5/62.0	63.0/65.0
Sound Pressure Level (Measured in Anechoic Room)		dB(A)	77.5/79.5	78.5/81.0	83.0/84.0
Protection Devices	High Pressure		Over-current protection		
	Inverter Circuit (Compressor/Fan)		Over-current protection		
Refrigerant Pipe Dimensions	Liquid (High Pressure) (Brazed)	In.	1/2 Brazed	5/8 Brazed	5/8 Brazed
	Gas (Low Pressure) (Brazed)	In.	1-1/8 Brazed	1-1/8 Brazed	1-1/8 Brazed
Indoor Unit Connect-able	Total capacity		50-130% of outdoor unit capacity		
	Model / Quantity		P05-P96/1-31		
Guaranteed Operating Range *1	Cooling (Outdoor) *2		23-126°F (-5-52°C)		
	Heating (Outdoor) *3		-22-60°F (-30-15.5°C)		
Extended Operating Range *4	Heating (Outdoor)		-31-60°F (-35-15.5°C)		
Efficiency Ratings *5	EER (Ducted/Non-Ducted)		10.8 / 12.1	12.8 / 14.1	11.5 / 12.4
	IEER (Ducted/Non-Ducted)		19.7 / 25.9	18.8 / 25.6	18.7 / 22
	COP (Ducted/Non-Ducted)		3.69 / 4.1	3.71 / 4.07	3.5 / 3.78

NOTES:

Nominal cooling conditions (Test conditions are based on AHRI 1230) Indoor: 80°FD.B./67°FW.B. (26.7°CD.B./19.4°CW.B.), Outdoor: 95°FD.B. (35°CD.B.)

Nominal heating conditions (Test conditions are based on AHRI 1230) Indoor: 70°FD.B. (21.1°CD.B.), Outdoor: 47°FD.B./43°FW.B. (8.3°CD.B./6.1°CW.B.)

Twinning kit is required for combining multiple individual outdoor units in the field for PUHY-EPT(Y)SNU combined systems.

1. Harsh weather environments may demand performance enhancing equipment. Ask your Mitsubishi Electric representative for more details about your region.
2. For details on extended cooling operation range down to -10° F DB, see Low Ambient Kit Submittal.
3. When applying product below -4°F, consult your design engineer for cold climate application best practices, including the use of a backup source for heating.
4. Unit will continue to operate in extended operating range, but capacity is not guaranteed.
5. Efficiency ratings are based on AHRI 1230 test method

PUMY-P**NKMU2 and H2i®

SPECIFICATION			MODEL NAMES				
			PUMY-P36NKMU2(-BS)	PUMY-P48NKMU2(-BS)	PUMY-P60NKMU2(-BS)	PUMY-HP36NKMU	PUMY-HP48NKMU
Power Source			208/230V, 1-Phase, 60Hz				
Capacity *1	Cooling	Btu/h	36,000	48,000	60,000	36,000	48,000
	Heating	Btu/h	42,000	54,000	66,000	42,000	54,000
Electrical Supply	MCA	A	29		36	36	
	Maximum Overcurrent Protection (MOP)	A	44		45	44	
Recommended Fuse Size		A	30		40		
Short-circuit Current Rating (SCCR)		kA	5				
Fan	Type x Quantity		Propeller Fan x 2				
	Airflow Rate	CFM	3,885		4,879	3,885	
	Motor Output	kW	2.8	3.3	3.9	2.8	3.4
Compressor	Type		INVERTER-driven Scroll Hermetic				
	Operating Range	Cooling	29% to 100%	23% to 100%	28% to 100%	29% to 100%	23% to 100%
		Heating	24% to 100%	18% to 100%	18% to 100%	17% to 100%	16% to 100%
	Motor Output	kW	0.074 + 0.074 (two fan motors)		0.2 + 0.2 (two fan motors)	0.074 + 0.074 (two fan motors)	
	Lubricant		FV50S (2.3 liters)		FVC68D (2.3 liters)	FV50S (2.3 liters)	
Refrigerant			R410A				
External Finish			Galvanized Sheets (plus Powder Coating for -BS Model) Munsell 3Y 7.8/1.1				
Dimensions	Height	In.	52-11/16				
	Width	In.	41-11/32				
	Depth	In.	13 (+1)				
Net Weight		Pounds	267		295	267	
Sound Pressure Levels (As Measured in an Anechoic Room)		dB(A)	49/53	51/54	58/59	49/53	51/54
Protection Devices	High Pressure Protection		High Pressure Switch				
	Compressor		Discharge thermo protection, Over-current protection				
	Inverter Circuit		Over-heat protection, Over-current protection				
Refrigerant Pipe Dimensions	Liquid (High Pressure) (Flare)	In.	3/8				
	Gas (Low Pressure) (Flare)	In.	5/8		3/4	5/8	
Indoor Unit	Total Capacity		50 – 130% of Outdoor Unit Capacity				
	Quantity		P05-P36 / 1-9	P05-P54 / 1-12	P05-P72 / 1-12	P05-P36 / 1-9	P05-P54 / 1-12
Operating Temperature Range	Cooling		Outdoor: 5° to 115° F D.B. *3 *4				
	Heating		Outdoor: -13° to +59° F W.B.				
Efficiency Ratings *2							
EER (Ducted/Non-Ducted)			12.6 / 15.0	11.3 / 13.1	11.1 / 13.3	12.6 / 15.0	11.3 / 13.1
SEER (Ducted/Non-Ducted)			18.3 / 22.3	16.5 / 22.6	17.8 / 20.0	18.3 / 22.3	16.5 / 22.6
COP (Ducted/Non-Ducted)			3.7 / 4.0	3.3 / 4.0	3.7 / 4.1	3.7 / 4.0	3.3 / 4.0
HSPF (Ducted/Non-Ducted)			11.2 / 12.0	11.0 / 12.0	10.7 / 12.0	11.7 / 12.0	11.0 / 12.0

Notes:

*1 Rating Conditions:
Cooling | Indoor: 80° F (26.7° C) DB/67° F (19.4° C) WB; Outdoor: 95° F (35° C) DB.
Heating | Indoor: 70° F (21.1° C) DB; Outdoor: 47° F (8.3° C) DB/43° F (6.1° C) WB.

*2 Efficiencies values based in AHRI 210/240 test method.

*3 When using Wind Baffles [WB-PA3], the minimum operating range is 5° F.
Without Wind Baffles, the minimum operating range is 23° F.

*4 When connecting PKFY-P06NBMU/P08NHMU,PFFY-P06/08/12NEMU or PFFY-P06/08/12NRMU indoor units, the minimum operating range is 50° F.

-BS indicates Seacoast Protection option.

LIMITED WARRANTY | Seven-year warranty on compressor. One-year warranty on parts. See our website for details on specific additional application installation coverage.

Specifications are subject to change.

PQRY-P**T(Y)LMU-A1

SPECIFICATIONS			MODEL NAMES			
VOLTAGES		208/230V	PQRY-P72TLMU-A1	PQRY-P96TLMU-A1	PQRY-P120TLMU-A1	PQRY-P144TLMU-A1
		460V	PQRY-P72YLMU-A1	PQRY-P96YLMU-A1	PQRY-P120YLMU-A1	PQRY-P144YLMU-A1
Power Source			3-phase 3-wire 208-230 V ±10% 60 Hz			
			3-phase 3-wire 460 V ±10% 60 Hz			
Capacity (Nominal) *1	Cooling	Btu/h	72,000	96,000	120,000	144,000
	Heating	Btu/h	69,000	92,000	114,000	137,000
Electrical Supply	MCA	A	13/12	19/17	29/26	35/32
			6	9	13	16
	MOP	A	20/20	30/25	50/45	60/50
			15	15	20	25
Compressor	Type x Quantity		INVERTER-driven Scroll Hermetic x 1			
	Operating Range		24% to 100%	18% to 100%	14% to 100%	19% to 100%
	Lubricant		MEL32			
Circulating Water	Water Flow Rate	GPM	25.4	25.4	25.4	31.7
	Pressure Drop	Ft. (psi)	8 (3.48)	8 (3.48)	8 (3.48)	15 (6.38)
	Max Water Pressure	psi (MPa)	290 (2)			
Refrigerant	Type		R410A			
External Finish			Galvanized steel sheets			
Dimensions	Height	In.	43-5/16			57-1/8
	Width	In.	34-11/16			
	Depth	In.	21-11/16			
Net Weight		Pounds	382			481
			406			508
Sound Pressure Level (As Measured in an Anechoic Room)		dB(A)	46	48	54	
Protection Devices	High Pressure Protection		High pressure sensor, High pressure switch			
	Compressor		Over-heat protection, Over-current protection			
	Inverter		Over-heat protection			
Refrigerant Pipe Dimensions	Liquid (High Pressure) (Brazed)	In.	5/8	3/4		7/8
	Gas (Low` Pressure) (Brazed)	In.	3/4	7/8		1-1/8
Indoor Unit Connectable	Total Capacity		50 to 150% of water-source unit capacity			
	Model/Quantity		P06-P96/1-18	P06-P96/1-24	P06-P96/1-30	P06-P96/1-36
Operating Temperature Range	Cooling	W.B.	Indoor: 59 to 75° F			
	Heating	D.B.	Indoor: 50 to 113° F			
Inlet Water Temperature Range	Cooling		50 to 113° F			
	Heating		50 to 113° F			
Efficiency Ratings (Ducted/ Non-Ducted) *2	EER		16.7/20.1	15.2/18.7	13.4/15.6	12.1/15.4
	IEER		24.2/28.1	25.0/30.4	23.2/29.0	19.5/23.1
	COP		5.51/6.05	5.77/5.93	5.51/5.60	4.90/5.50

Notes:

*1 Rating Conditions:
Cooling | Indoor: 81° F (27° C) D.B./66° F (19° C) W.B.; Water Temperature: 86° F (30° C) Heating | Indoor:: 68° F (20° C) D.B.; Water Temperature: 68° F (20° C).

*2 Efficiency values based on AHRI 1230 test method.

Specifications are subject to change without notice.

LIMITED WARRANTY | Seven-year compressor and one year parts. See our website for details on specific additional application installation coverage.

PQRY-P**T(Y)LMU-A1

SPECIFICATIONS			MODEL NAMES			
VOLTAGE		208/230V	PQRY-P168TLMU-A1	PQRY-P192TLMU-A1	PQRY-P216TLMU-A1	PQRY-P240TLMU-A1
		460V	PQRY-P168YLMU-A1	PQRY-P192YLMU-A1	PQRY-P216YLMU-A1	PQRY-P240YLMU-A1
Power Source			3-phase 3-wire 208-230 V ±10% 60 Hz			
			3-phase 3-wire 460 V ±10% 60 Hz			
Capacity (Nominal) *1	Cooling	Btu/h	168,000	192,000	216,000	240,000
	Heating	Btu/h	161,000	183,000	206,000	228,000
Electrical Supply	MCA	A	44/39	54/49	69/63	79/71
			20	25	31	36
	MOP	A	70/70	90/80	110/110	125/125
			35	40	50	60
Compressor	Type x Quantity		INVERTER-driven Scroll Hermetic x 1			
	Operating Range		16% to 100%	14% to 100%	13% to 100%	12% to 100%
	Lubricant		MEL32			
Circulating Water	Water Flow Rate	GPM	31.7	31.7	50.7	50.7
	Pressure Drop	Ft. (psi)	15 (6.38)	15 (6.38)	15 (6.53)	15 (6.53)
	Max Water Pressure	psi (MPa)	290 (2)			
Refrigerant	Type		R410A			
External Finish			Galvanized steel sheets			
Dimensions	Height	In.	57-1/8			
	Width	In.	34-11/16			
	Depth	In.	21-11/16			
Net Weight		Pounds	481		558	
			508		574	
Sound Pressure Level (As Measured in an Anechoic Room)		dB(A)	56	58		
Protection Devices	High Pressure Protection		High pressure sensor, High pressure switch			
	Compressor		Over-heat protection, Over-current protection			
	Inverter		Over-heat protection			
Refrigerant Pipe Dimensions	Liquid (High Pressure) (Brazed)	In.	7/8		7/8 (1-1/8 for the part that exceeds 65 m)	
	Gas (Low Pressure) (Brazed)	In.	1-1/8			1-3/8
Indoor Unit Connectable	Total Capacity		50 to 150% of water-source unit capacity			
	Model/Quantity		P06-P96/1-42	P06-P96/1-48	P06-P96/2-50 (Connectable branch pipe number is max. 48.)	P06-P96/2-50 (Connectable branch pipe number is max. 48.)
Operating Temperature Range	Cooling	W.B.	Indoor: 59 to 75° F			
	Heating	D.B.	Indoor: 50 to 113° F			
Inlet Water Temperature Range	Cooling		50 to 113° F			
	Heating		50 to 113° F			
Efficiency Ratings (Ducted/ Non-Ducted) *2	EER		15.1/18.6	11.9/13.5	14.8/17.1	11.5/12.4
	IEER		22.5/26.1	18.0/21.8	23.6/25.8	18.4/21.7
	COP		5.29/5.94	4.73/5.39	5.57/5.67	4.60/5.15

Notes:

*1 Rating Conditions: Cooling | Indoor: 81° F (27° C) D.B./66° F (19° C) W.B.; Water Temperature: 86° F (30° C) Heating | Indoor:: 68° F (20° C) D.B.; Water Temperature: 68° F (20° C).

*2 Efficiency values based on AHRI 1230 test method.

Specifications are subject to change without notice.

LIMITED WARRANTY | Seven-year compressor and one year parts. See our website for details on specific additional application installation coverage.

PQRY-P**T(Y)SLMU-A1

SPECIFICATIONS			MODEL NAMES				
VOLTAGES		208 /230V	PQRY-P144TSLMU-A1 *2	PQRY-P168TSLMU-A1 *2	PQRY-P192TSLMU-A1 *2	PQRY-P216TSLMU-A1 *2	PQRY-P240TSLMU-A1 *2
			With 2 PQRY-P72TLMU-A1 *3	With 1 PQRY-P72TLMU-A1 and 1 PQRY-P96TLMU-A1 *3	With 2 PQRY-P96TLMU-A1 *3	With 1 PQRY-P96TLMU-A1 and 1 PQRY-P120TLMU-A1 *3	With 2 PQRY-P120TLMU-A1 *3
		460V	PQRY-P144YSLMU-A1 *2	PQRY-P168YSLMU-A1 *2	PQRY-P192YSLMU-A1 *2	PQRY-P216YSLMU-A1 *2	PQRY-P240YSLMU-A1 *2
			With 2 PQRY-P72YLMU-A1 *3	With 1 PQRY-P72YLMU-A1 and 1 PQRY-P96YLMU-A1 *3	With 2 PQRY-P96YLMU-A1 *3	With 1 PQRY-P96YLMU-A1 and 1 PQRY-P120YLMU-A1 *3	With 2 PQRY-P120YLMU-A1 *3
Power Source			208/230V, 3-Phase, 60Hz				
			460V, 3-Phase, 60Hz				
Capacity (Nominal) *1	Cooling	Btu/h	144,000	168,000	192,000	216,000	240,000
	Heating	Btu/h	160,000	188,000	215,000	243,000	270,000
Compressor	Operating Range		12% to 100%	10% to 100%	9% to 100%	8% to 100%	7% to 100%
	Type x Quantity		Refer to: PQRY-P72TLMU-A1	Refer to: PQRY-P72TLMU-A1 PQRY-P96TLMU-A1	Refer to: PQRY-P96TLMU-A1	Refer to: PQRY-P96TLMU-A1 PQRY-P120TLMU-A1	Refer to: PQRY-P120TLMU-A1
	Lubricant						
Circulating Water	Water Flow Rate	GPM (L/s)					
	Pressure Drop	Ft. (psi)					
	Max Water Pressure	psi (MPa)					
Refrigerant	Type		PQRY-P72YLMU-A1	PQRY-P72YLMU-A1 PQRY-P96YLMU-A1	PQRY-P96YLMU-A1	PQRY-P96YLMU-A1 PQRY-P120YLMU-A1	PQRY-P120YLMU-A1
External Finish							
Dimensions	Height	In.					
	Width	In.					
	Depth	In.					
Net Weight		Pounds					
Sound Pressure Level (As Measured in an Anechoic Room)		dB(A)	49	50	51	55	57
Protection Devices	High Pressure Protection		High pressure sensor, High pressure switch				
	Compressor/Fan		Overheat protection/Thermal switch				
	Inverter		Overheat and Overcurrent Protection				
Refrigerant Pipe Dimensions	Liquid (High Pressure) (Brazed)	In.	7/8			7/8 (1-1/8 for the part that exceeds 65 m)	
	Gas (Low Pressure) (Brazed)	In.	1-1/8				1-3/8
Indoor Unit Connectable	Total Capacity		50 to 150% of outdoor unit capacity				
	Model/Quantity		P06~P96/1-36	P06~P96/1-42	P06~P96/1-48	P06~P96/2-50 (Connectable branch pipe number is max. 48.)	P06~P96/2-50 (Connectable branch pipe number is max. 48.)
Inlet Water Temperature Range	Cooling		50 to 113° F				
	Heating		50 to 113° F				
Efficiency Ratings (Ducted/ Non-Ducted) *4	EER		14.4/16.2	11.2/10.9	13.5/14.9	10.8/11.0	12.5/13.8
	IEER		24.4/26.4	19.0/21.2	23.5/25.9	18.8/21.2	22.4/25.7
	COP		5.77/5.53	4.75/5.23	5.64/5.40	4.52/5.05	5.46/5.32

Notes:

*1 Rating Conditions:
Cooling | Indoor: 81° F (27° C) D.B./66° F (19° C) W.B.; Water Temperature: 86° F (30° C) Heating | Indoor: 68° F (20° C) D.B.; Water Temperature: 68° F (20° C).

*2 Twinning kit is required for combining two individual outdoor units in the field for PQRY-P-T(Y)SLMU-A1.

*3 Each individual outdoor unit requires a separate electrical connection. Reference electricaldata for each individual outdoor unit.

*4 Efficiency values based on AHRI 1230 test method.

Specifications are subject to change without notice.

LIMITED WARRANTY | Seven-year compressor and one year parts. See our website for details on specific additional application installation coverage.

PQRY-P**T(Y)SLMU-A1

SPECIFICATIONS			MODEL NAMES		
VOLTAGES		208/230V	PQRY-P288TSLMU-A1 *2	PQRY-P312TSLMU-A1 *2	PQRY-P336TSLMU-A1 *2
			With 2 PQRY-P144TLMU-A1 *3	With 1 PQRY-P168TLMU-A1 and 1 PQRY-P144TLMU-A1 *3	With 2 PQRY-P168TLMU-A1 *3
		460V	PQRY-P288YSLMU-A1 *2	PQRY-P312YSLMU-A1 *2	PQRY-P336YSLMU-A1 *2
			With 2 PQRY-P144YLMU-A1 *3	With 1 PQRY-P168YLMU-A1 and 1 PQRY-P144YLMU-A1 *3	With 2 PQRY-P168YLMU-A1 *3
Power Source			208/230V, 3-Phase, 60Hz		
			460V, 3-Phase, 60Hz		
Capacity (Nominal) *1	Cooling	Btu/h	288,000	312,000	336,000
	Heating	Btu/h	275,000	297,000	320,000
Compressor	Operating Range		9% to 100%	9% to 100%	8% to 100%
	Type x Quantity		Refer to: PQRY-P144TLMU-A1	Refer to: PQRY-P168TLMU-A1 PQRY-P144TLMU-A1	Refer to: PQRY-P168TLMU-A1
	Lubricant				
Circulating Water	Water Flow Rate	GPM (L/s)			
	Pressure Drop	Ft. (psi)			
	Max Water Pressure	psi (MPa)			
Refrigerant	Type		PQRY-P144YLMU-A1	PQRY-P168YLMU-A1 PQRY-P144YLMU-A1	PQRY-P168YLMU-A1
External Finish					
Dimensions	Height	In.			
	Width	In.			
	Depth	In.			
Net Weight		Pounds			
Sound Pressure Level (As Measured in an Anechoic Room)		dB(A)	57	58	59
Protection Devices	High Pressure Protection		High pressure sensor, High pressure switch		
	Compressor/Fan		Overheat protection/Thermal switch		
	Inverter		Overheat and Overcurrent Protection		
Refrigerant Pipe Dimensions	Liquid (High Pressure) (Brazed)	In.	1-1/8		
	Gas (Low Pressure) (Brazed)	In.	1-3/8		
Indoor Unit Connectable	Total Capacity		50 to 150% of outdoor unit capacity		
	Model/Quantity		P06-P96/2-50 (Connectable branch pipe number is max. 48.)	P06-P96/2-50 (Connectable branch pipe number is max. 48.)	P06-P96/2-50 (Connectable branch pipe number is max. 48.)
Inlet Water Temperature Range	Cooling		50 to 113° F		
	Heating		50 to 113° F		
Efficiency Ratings (Ducted/ Non-Ducted) *4	EER		11.4/13.7	11.2/13.0	11.1/12.3
	IEER		18.5/20.6	17.6/20.4	16.8/20.1
	COP		4.90/5.25	4.78/5.24	4.66/5.23

Notes:

*1 Rating Conditions:
Cooling | Indoor: 81° F (27° C) D.B./66° F (19° C) W.B.;
Water Temperature: 86° F (30° C)

Heating | Indoor: 68° F (20° C) D.B.; Water Temperature: 68° F (20° C).

*2 Twinning kit is required for combining two individual outdoor units in the field for PQRY-P-T(Y)SLMU-A1.

*3 Each individual outdoor unit requires a separate electrical connection. Reference electrical data for each individual outdoor unit.

*4 Efficiency values based on AHRI 1230 test method.

Specifications are subject to change without notice.

LIMITED WARRANTY | Seven-year compressor and one year parts. See our website for details on specific additional application installation coverage.

PQHY-P**T(Y)LMU-A1

SPECIFICATIONS			MODEL NAMES			
VOLTAGE		208/230V	PQHY-P72TLMU-A1	PQHY-P96TLMU-A1	PQHY-P120TLMU-A1	PQHY-P144TLMU-A1
		460V	PQHY-P72YLMU-A1	PQHY-P96YLMU-A1	PQHY-P120YLMU-A1	PQHY-P144YLMU-A1
Power Source			208/230V, 3-Phase, 60Hz			
			460V, 3-Phase, 60Hz			
Capacity (Nominal) *1	Cooling	Btu/h	72,000	96,000	120,000	144,000
	Heating	Btu/h	69,000	92,000	114,000	137,000
Electrical Supply	MCA	A	13/12	19/17	29/26	35/32
			6	9	13	16
	MOP	A	20/20	30/25	50/45	60/50
			15	15	20	25
Compressor	Type x Quantity		INVERTER-driven Scroll Hermetic x 1			
	Operating Range		24% to 100%	18% to 100%	14% to 100%	19% to 100%
	Lubricant		MEL32			
Circulating Water	Water Flow Rate	GPM (L/s)	25.4	25.4	25.4	31.7
	Pressure Drop	Ft. (psi)	8 (3.48)	8 (3.48)	8 (3.48)	15 (6.38)
	Max Water Pressure	psi (MPa)	290 (2)			
Refrigerant	Type		R410A			
External Finish			Galvanized steel sheets			
Dimensions	Height	In.	43-5/16			57-1/8
	Width	In.	34-11/16			
	Depth	In.	21-11/16			
Net Weight		Pounds	375			474
			400			501
Sound Pressure Level (As Measured in an Anechoic Room)		dB(A)	46	48	54	
Protection Devices	High Pressure Protection		High pressure sensor, High pressure switch			
	Compressor		Over-heat protection, Over-current protection			
	Inverter		Over-heat protection			
Refrigerant Pipe Dimensions	Liquid (High Pressure) (Brazed)	In.	3/8	3/8 (1/2, total length >= 90 m)		1/2
	Gas (Low Pressure) (Brazed)	In.	3/4	7/8		1-1/8
Indoor Unit Connectable	Total Capacity		50 to 150% of water-source unit capacity			
	Model/Quantity		P06-P96/1-15	P06-P96/1-20	P06-P96/1-26	P06-P96/1-31
Operating Temperature Range	Cooling	W.B.	Indoor: 59 to 75° F			
	Heating	D.B.	Indoor: 50 to 113° F			
Inlet Water Temperature Range	Cooling		50 to 113° F			
	Heating		50 to 113° F			
Efficiency Ratings (Ducted/ Non-Ducted) *2	EER		17.4/20.7	15.3/19.4	13.5/15.9	12.1/15.6
	IEER		24.2/28.1	25.0/30.4	23.2/29.0	19.5/23.1
	COP		5.62/6.15	5.80/6.02	5.55/5.66	4.92/5.56

Notes:

*1 Rating Conditions: Cooling | Indoor: 81° F (27° C) D.B./66° F (19° C) W.B.; Water Temperature: 86° F (30° C) Heating | Indoor: 68° F (20° C) D.B.; Water Temperature: 68° F (20° C).

*2 Efficiency values based on AHRI 1230 test method.

Specifications are subject to change without notice.

LIMITED WARRANTY | Seven-year compressor and one year parts. See our website for details on specific additional application installation coverage.

PQHY-P**T(Y)LMU-A1

SPECIFICATIONS			MODEL NAMES			
VOLTAGE		208/230V	PQHY-P168TLMU-A1	PQHY-P192TLMU-A1	PQHY-P216TLMU-A1	PQHY-P240TLMU-A1
		460V	PQHY-P168YLMU-A1	PQHY-P192YLMU-A1	PQHY-P216YLMU-A1	PQHY-P240YLMU-A1
Power Source			208/230V, 3-Phase, 60Hz			
			460V, 3-Phase, 60Hz			
Capacity (Nominal) *1	Cooling	Btu/h	168,000	192,000	216,000	240,000
	Heating	Btu/h	161,000	183,000	206,000	228,000
Electrical Supply	MCA	A	44/39	54/49	69/63	79/71
			20	25	31	36
	MOP	A	70/70	90/80	110/110	125/125
			35	40	50	60
Compressor	Type x Quantity		INVERTER-driven Scroll Hermetic x 1			
	Operating Range		16% to 100%	14% to 100%	13% to 100%	12% to 100%
	Lubricant		MEL32			
Circulating Water	Water Flow Rate	GPM (L/s)	31.7	31.7	50.7	50.7
	Pressure Drop	Ft. (psi)	15 (6.38)	15 (6.38)	15 (6.53)	15 (6.53)
	Max Water Pressure	psi (MPa)	290 (2)			
Refrigerant	Type		R410A			
External Finish			Galvanized steel sheets			
Dimensions	Height	In.	57-1/8			
	Width	In.	34-11/16			
	Depth	In.	21-11/16			
Net Weight		Pounds	474		552	
			501		567	
Sound Pressure Level (As Measured in an Anechoic Room)		dB(A)	56	58		
Protection Devices	High Pressure Protection		High pressure sensor, High pressure switch			
	Compressor		Over-heat protection, Over-current protection			
	Inverter		Over-heat protection			
Refrigerant Pipe Dimensions	Liquid (High Pressure) (Brazed)	In.	5/8			
	Gas (Low Pressure) (Brazed)	In.	1-1/8			
Indoor Unit Connectable	Total Capacity		50 to 150% of water-source unit capacity			
	Model/Quantity		P06-P96/1-36	P06-P96/1-41	P06-P96/2-46	P06-P96/2-50
Operating Temperature Range	Cooling	W.B.	Indoor: 59 to 75° F			
	Heating	D.B.	Indoor: 50 to 113° F			
Inlet Water Temperature Range	Cooling		50 to 113° F			
	Heating		50 to 113° F			
Efficiency Ratings (Ducted/ Non-Ducted) *2	EER		15.2/19.0	12.0/13.6	15.0/17.3	11.5/12.5
	IEER		22.5/26.1	18.0/21.8	23.6/25.8	18.4/21.7
	COP		5.32/6.01	4.76/5.43	5.61/5.72	4.62/5.19

Notes:

*1 Rating Conditions:
Cooling | Indoor: 81° F (27° C) D.B./66° F (19° C) W.B.; Water Temperature: 86° F (30° C) Heating | Indoor:: 68° F (20° C) D.B.; Water Temperature: 68° F (20° C).

*2 Efficiency values based on AHRI 1230 test method.

Specifications are subject to change without notice.

LIMITED WARRANTY | Seven-year compressor and one year parts. See our website for details on specific additional application installation coverage.

PQHY-P**T(Y)SLMU-A1

SPECIFICATIONS			MODEL NAMES				
VOLTAGE		208/230V	PQHY-P144TSLMU-A1 *2	PQHY-P168TSLMU-A1 *2	PQHY-P192TSLMU-A1 *2	PQHY-P216TSLMU-A1 *2	PQRY-P240TSLMU-A1 *2
			With 2 PQHY-P72TLMU-A1 *3	With 1 PQHY-P72TLMU-A1 and 1 PQHY-P96TLMU-A1 *3	With 2 PQHY-P96TLMU-A1 *3	With 1 PQHY-P96TLMU-A1 and 1 PQHY-P120TLMU-A1 *3	With 2 PQHY-P120TLMU-A1 *3
		460V	PQHY-P144YSLMU-A1 *2	PQHY-P168YSLMU-A1 *2	PQHY-P192YSLMU-A1 *2	PQHY-P216YSLMU-A1 *2	PQHY-P240YSLMU-A1 *2
			With 2 PQHY-P72YLMU-A1 *3	With 1 PQHY-P72YLMU-A1 and 1 PQHY-P96YLMU-A1 *3	With 2 PQHY-P96YLMU-A1 *3	With 1 PQHY-P96YLMU-A1 and 1 PQHY-P120YLMU-A1 *3	With 2 PQHY-P120YLMU-A1 *3
Power Source			208/230V, 3-Phase, 60Hz				
			460V, 3-Phase, 60Hz				
Capacity (Nominal) *1	Cooling	Btu/h	144,000	168,000	192,000	216,000	240,000
	Heating	Btu/h	160,000	188,000	215,000	243,000	270,000
Compressor	Operating Range		12% to 100%	10% to 100%	9% to 100%	8% to 100%	7% to 100%
	Type x Quantity		Refer to: PQHY-P72TLMU-A1	Refer to: PQHY-P72TLMU-A1 PQHY-P96TLMU-A1	Refer to: PQHY-P96TLMU-A1	Refer to: PQHY-P96TLMU-A1 PQHY-P120TLMU-A1	Refer to: PQHY-P120TLMU-A1
	Lubricant						
Circulating Water	Water Flow Rate	GPM (L/s)					
	Pressure Drop	Ft. (psi)					
	Max Water Pressure	psi (MPa)					
Refrigerant	Type		PQHY-P72YLMU-A1	PQHY-P72YLMU-A1 PQHY-P96YLMU-A1	PQHY-P96YLMU-A1	PQRY-P96YLMU-A1 PQRY-P120YLMU-A1	PQHY-P120YLMU-A1
External Finish							
Dimensions	Height	In.					
	Width	In.					
	Depth	In.					
Net Weight		Pounds					
Sound Pressure Level (As Measured in an Anechoic Room)		dB(A)	49	50	51	55	57
Protection Devices	High Pressure Protection		High pressure sensor, High pressure switch				
	Compressor/Fan		Overheat protection/Thermal switch				
	Inverter		Overheat and Overcurrent Protection				
Refrigerant Pipe Dimensions	Liquid (High Pressure) (Brazed)	In.	1/2	5/8			
	Gas (Low Pressure) (Brazed)	In.	1-1/8				
Indoor Unit Connectable	Total Capacity		50 to 150% of outdoor unit capacity				
	Model/Quantity		P06-P96/1-31	P06-P96/1-36	P06-P96/1-41	P06-P96/2-46	P06-P96/2-50
Inlet Water Temperature Range	Cooling		50 to 113° F				
	Heating		50 to 113° F				
Efficiency Ratings (Ducted/ Non-Ducted) *4	EER		14.5/16.4	11.3/10.9	13.6/15.0	10.8/11.0	12.5/13.9
	IEER		24.4/26.4	19.0/21.2	23.5/25.9	18.8/21.2	22.4/25.7
	COP		5.80/5.57	4.77/5.26	5.68/5.43	4.54/5.08	5.49/5.35

Notes:

*1 Rating Conditions:
Cooling | Indoor: 81° F (27° C) D.B./66° F (19° C) W.B.; Water Temperature: 86° F (30° C) Heating | Indoor: 68° F (20° C) D.B.; Water Temperature: 68° F (20° C).

*2 Twinning kit is required for combining two individual outdoor units in the field for PQRY-P-T(Y)SLMU-A1.

*3 Each individual outdoor unit requires a separate electrical connection. Reference electrical data for each individual outdoor unit.

*4 Efficiency values based on AHRI 1230 test method.

Specifications are subject to change without notice.

LIMITED WARRANTY | Seven-year compressor and one year parts. See our website for details on specific additional application installation coverage.

PQHY-P**T(Y)SLMU-A1

SPECIFICATIONS			MODEL NAMES			
VOLTAGES		208/230V	PQHY-P288TSLMU-A1 *2 With 2 PQHY-P144TLMU-A1 *3	PQHY-P312TSLMU-A1 *2 With 1 PQHY-P144TLMU-A1 and 1 PQHY-P168TLMU-A1 *3	PQHY-P336TSLMU-A1 *2 With 2 PQHY-P168TLMU-A1 *3	PQHY-P360TSLMU-A1 *2 With 1 PQHY-P168TLMU-A1 and 1 PQHY-P192TLMU-A1 *3
		460V	PQHY-P288YSLMU-A1 *2 With 2 PQHY-P144YLMU-A1 *3	PQHY-P312YSLMU-A1 *2 With 1 PQHY-P144YLMU-A1 and 1 PQHY-P168YLMU-A1 *3	PQHY-P336YSLMU-A1 *2 With 2 PQHY-P168YLMU-A1 *3	PQHY-P360YSLMU-A1 *2 With 1 PQHY-P168YLMU-A1 and 1 PQHY-P192YLMU-A1 *3
Power Source			208/230V, 3-Phase, 60Hz			
			460V, 3-Phase, 60Hz			
Capacity (Nominal) *1	Cooling	Btu/h	288,000	312,000	336,000	360,000
	Heating	Btu/h	323,000	350,000	378,000	405,000
Compressor	Operating Range		9% to 100%	9% to 100%	8% to 100%	8% to 100%
	Type x Quantity		Refer to: PQHY-P144TLMU-A1	Refer to: PQHY-P144TLMU-A1 PQHY-P168TLMU-A1	Refer to: PQHY-P168TLMU-A1	Refer to: PQHY-P168TLMU-A1 PQHY-P192TLMU-A1
	Lubricant					
Circulating Water	Water Flow Rate	GPM (L/s)				
	Pressure Drop	Ft. (psi)				
	Max Water Pressure	psi (MPa)				
Refrigerant	Type		PQHY-P144YLMU-A1	PQHY-P144YLMU-A1 PQHY-P168YLMU-A1	PQHY-P168YLMU-A1	PQRY-P168YLMU-A1 PQRY-P192YLMU-A1
External Finish						
Dimensions	Height	In.				
	Width	In.				
	Depth	In.				
Net Weight		Pounds				
Sound Pressure Level (As Measured in an Anechoic Room)		dB(A)	57	58	59	60
Protection Devices	High Pressure Protection		High pressure sensor, High pressure switch			
	Compressor/Fan		Overheat protection/Thermal switch			
	Inverter		Overheat and Overcurrent Protection			
Refrigerant Pipe Dimensions	Liquid (High Pressure) (Brazed)	In.	3/4			
	Gas (Low Pressure) (Brazed)	In.	1-3/8		1-5/8	
Indoor Unit Connectable	Total Capacity		50 to 150% of outdoor unit capacity			
	Model/Quantity		P06-P96/2-50	P06-P96/2-50	P06-P96/2-50	P06-P96/2-50
Inlet Water Temperature Range	Cooling		50 to 113° F			
	Heating		50 to 113° F			
Efficiency Ratings (Ducted/ Non-Ducted) *4	EER		11.4/13.8	11.2/13.0	11.1/12.3	11.2/12.1
	IEER		18.5/20.6	17.6/20.4	16.8/20.1	17.5/20.3
	COP		4.92/5.27	4.80/5.26	4.67/5.25	4.64/5.14

Notes:

*1 Rating Conditions:
Cooling | Indoor: 81° F (27° C) D.B./66° F (19° C) W.B.; Water Temperature: 86° F (30° C)
Heating | Indoor: 68° F (20° C) D.B.; Water Temperature: 68° F (20° C).

*2 Twinning kit is required for combining two individual outdoor units in the field for PQRY-P-T(Y)SLMU-A1.

*3 Each individual outdoor unit requires a separate electrical connection. Reference electrical data for each individual outdoor unit.

*4 Efficiency values based on AHRI 1230 test method.

Specifications are subject to change without notice.

LIMITED WARRANTY | Seven-year compressor and one year parts. See our website for details on specific additional application installation coverage.

PWFY-P**NMU-E(E2)-AU/BU

Model Name				PWFY-P36NMU-E2-AU	PWFY-P72NMU-E2-AU	PWFY-P36NMU-E-BU
Power Source				208/230V, 1-phase, 60Hz		
Cooling Capacity *1			Btu/h	36,200	72,000	-
Heating Capacity *1			Btu/h	39,900	79,800	39,900
Power Consumption	Cooling		kW	0.025 – 0.028		N/A
	Heating		kW	0.025 – 0.028		2.48
Current	Cooling		A	0.145 – 0.150		N/A
	Heating		A	0.145 – 0.150		12.30 /11.12
External Finish				Galvanized-steel Sheet		
Dimensions	Height		In.	31-1/2		
	Width		In.	17-3/4		
	Depth		In.	11-13/16		
Net Weight	Unit		Pounds	73	80	133
Operating Outdoor Temperature Range	Cooling			23° F to 115° F D.B. (PURY/PUHY/PURY-HP) 23° F to 109° F D.B. (PUHY-HP)		-
	Heating			-4 F to 90 F W.B. (PURY/PUHY) -13 F to 60 F W.B. (PURY-HP/PUHY-HP)		-4 ° F to 90° F W.B.
Circulating Water Operation Volume Range			GPM (L/m)	4.8 – 9.4 (18-36)	7.9 – 18.9 (30-72)	2.6 – 9.6 (10-36)
Circulating Water Design Pressure			MPa (psi)	1 (145)		
Water Piping Dimensions	Inlet		In.	3/4 FPT	1 FPT	3/4 FPT
	Outlet		In.	3/4 FPT	1 FPT	3/4 FPT
Refrigerant Pipe Dimensions	Liquid (High Pressure) (Brazed)		In.	3/8	3/8	3/8
	Gas (Low Pressure) (Brazed)		In.	5/8	3/4	5/8
Drainpipe Dimensions (O.D.)			In.	1-1/4		
Sound Pressure Levels			dB(A)	29		44
Connectable Outdoor Units				PURY-P72-288T/Y(S)KMU (-BS) PURY-HP72-192T/Y(S)KMU (-BS) PUHY-P72-360T/Y(S)KMU (-BS) PURY-P72-336T/Y(S)LMU-A (-BS) PQRY-P72-336T/Y(S)LMU-A1 (-BS) PUHY-P72-360T/Y(S)LMU-A (-BS) PQHY-P72-360T/Y(S)LMU-A1 (-BS)		PURY-P72-288T/Y(S)KMU (-BS) PURY-HP72-192T/Y(S)KMU (-BS) PURY-P72-336T/Y(S)LMU-A (-BS) PQRY-P72-336T/Y(S)LMU-A1 (-BS)

Notes:
*1 Nominal heating conditions (PWFY conditions are indicated in the parentheses).

(W-Series)
Outdoor Temp.: 47° F D.B./43° F W.B. (8.3° C D.B./6.1° C W.B.)
Pipe length: 25 ft (7.6 m)
Level difference: 0 ft (0 m)
(Inlet water Temp.: 149° F (65°C) Water flow rate: 9.4 gpm (2.15 m^3/h))

(WR2-Series)
Circulating water Temp.: 70° F (21.1° C)
Pipe length: 25 ft (7.6 m)
Level difference: 0 ft (0 m)
(Inlet water Temp.: 149° F (65° C) Water flow rate 9.2 gpm (2.15 m^3/h))

Note: Consult Application Note 2014—Designing with PWFY for additional design assistance.

Note: The design water pressure drop and flow. Note that the pressure drop doesn't include strainers.

Specifications are subject to change without notice.

LIMITED WARRANTY | Seven-year compressor and one year parts. Extended warranty of up to 10 years is available. See our website for details on specific additional application installation coverage.

PKFY-P**N(L,K)MU

Model Name			PK-FY-P04NLMU-E	PK-FY-P06NLMU-E	PK-FY-P08NLMU-E	PK-FY-P12NLMU-E	PK-FY-P15NLMU-E	PK-FY-P18NLMU-E	PKFY-P24NK-MU-E2.TH	PKFY-P30NK-MU-E2.TH
Power Source			208/230V, 1-Phase, 60Hz							
Cooling Capacity		Btu/h *1	4,000	6,000	8,000	12,000	15,000	18,000	24,000	30,000
Heating Capacity		Btu/h *2	4,500	6,700	9,000	13,500	17,000	20,000	27,000	34,000
Power Consumption	Cooling	kW	0.02		0.03	0.04		0.05	70	
	Heating	kW	0.01		0.02	0.03		0.04	70	
Current	Cooling	A	0.20		0.25	0.35		0.4	0.50	
	Heating	A	0.15		0.20	0.30		0.45	0.50	
External Finish	Munsell No.		Plastic, MUNSELL (0.7PB 9.2/0.4)						Plastic, MUNSELL (1.0Y 9.2/0.2)	
Dimensions	Height	In.	11-25/32						14-3/8	
	Width	In.	30-7/16				35-3/8		46-1/16	
	Depth	In.	9-11/32						11-5/8	
Net Weight	Unit	Pounds	23.6	24.5			28.4		46	
Heat Exchanger			Cross Fin (Aluminum Plate Fin and Copper Tube)							
Fan	Type x Quantity		Line Flow Fan x 1							
	Airflow Rate	CFM	117-124-134-148	141-155-173-191	141-162-191-237	152-191-244-297	222-261-304-353	240-293-360-438	570 – 920	710 – 920
	Motor Type		Direct-driven DC Motor							
Air Filter			Polypropylene Honeycomb							
Refrigerant Pipe Dimensions	Liquid (High Pressure) (Flare)	In.	1/4						3/8	
	Gas (Low Pressure) (Flare)	In.	1/2						5/8	
Drain Pipe Dimension (I.D.)		In.	5/8							
Sound Pressure Levels		dB(A)	22-24-26-28	22-26-29-31	22-27-31-35	24-31-37-41	29-34-37-40	31-36-41-46	39 – 49	43 – 49

Notes:

Cooling / Heating capacity indicated at the maximum value at operation under the following conditions:

*1. Cooling | Indoor: 80° F (27° C) DB / 67° F (19° C) WB, Outdoor 95° F (35° C) DB

*2 Heating | Indoor: 70° F (21° C) DB, Outdoor 47° F (8° C) DB / 43° F (6° C) WB

Specifications are subject to change without notice.

LIMITED WARRANTY | Seven-year compressor and one year parts. Extended warranty of up to 10 years is available. See our website for details on specific additional application installation coverage.

PLFY-EP**NEMU-E

Model Name			PLFY-EP06NEMU-E	PLFY-EP08NEMU-E	PLFY-EP12NEMU-E	PLFY-EP15NEMU-E	PLFY-EP18NEMU-E1
Power Source			208/230V, 1-Phase, 60Hz				
Cooling Capacity		Btu/h *1	6,000	8,000	12,000	15,000	18,000
Heating Capacity		Btu/h *1	6,700	9,000	13,500	17,000	20,000
Power Consumption	Cooling	W	20	30	30	30	40
	Heating	W	20	20	20	20	40
Current	Cooling	A	0.19	0.31	0.31	0.31	0.43
	Heating	A	0.14	0.26	0.26	0.26	0.38
External Finish Color (Munsell No.)			MUNSELL (6.4Y 8.9/0.4)				
Dimensions	Height	In.	10-3/16	10-3/16	10-3/16	10-3/16	11-3/4
	Width	In.	33-3/32				
	Depth	In.	33-3/32				
Net Weight *2	Unit/Panel	Pounds	46 / 11	46 / 11	46 / 11	46 / 11	55 / 11
Heat Exchanger			Cross Fin (Aluminum Plate Fin and Copper Tube)				
Fan	Type x Quantity		Turbo Fan x 1				
	Airflow Rate *3	CFM	300 - 424 - 459 - 494	494 - 530 - 565 - 600	494 - 530 - 565 - 600	530 - 547 - 565 - 600	636 - 671 - 742 - 812
	Motor Type		DC Motor				
	Motor Output	W	50	50	50	50	120
Air Filter			PP honeycomb (long life filter, anti-bacterial type)				
Refrigerant Pipe Dimensions	Liquid (High Pressure) (Flare)	In.	1/4				
	Gas (Low Pressure) (Flare)	In.	1/2				
Drain Pipe Dimension (O.D.)		In.	1-1/4				
Sound Pressure Levels (As Measured in an Anechoic Room)*3	Low-Mid1-Mid2-High	dB(A)	19 - 23 - 25 - 27	27 - 29 - 30 - 31	27 - 29 - 30 - 31	28 - 29 - 30 - 31	28 - 30 - 32 - 34

Model Name			PLFY-EP24NEMU-E	PLFY-EP30NEMU-E	PLFY-EP36NEMU-E	PLFY-EP48NEMU-E
Power Source			208/230V, 1-Phase, 60Hz			
Cooling Capacity		Btu/h *1	24,000	30,000	36,000	48,000
Heating Capacity		Btu/h *1	27,000	34,000	40,000	54,000
Power Consumption	Cooling	W	40	40	70	110
	Heating	W	40	40	70	110
Current	Cooling	A	0.43	0.45	0.73	1.01
	Heating	A	0.38	0.40	0.68	0.96
External Finish Color (Munsell No.)			MUNSELL (6.4Y 8.9/0.4)			
Dimensions	Height	In.	11-3/4			
	Width	In.	33-3/32			
	Depth	In.	33-3/32			
Net Weight *2	Unit/Panel	Pounds	55 / 11			
Heat Exchanger			Cross Fin (Aluminum Plate Fin and Copper Tube)			
Fan	Type x Quantity		Turbo Fan x 1			
	Airflow Rate *3	CFM	636 - 671 - 742 - 812	636 - 706 - 777 - 812	777 - 883 - 989 - 1,095	777 - 953 - 1,095 - 1,236
	Motor Type		DC Motor			
	Motor Output	W	120			
Air Filter			PP honeycomb (long life filter, anti-bacterial type)			
Refrigerant Pipe Dimensions	Liquid (High Pressure) (Flare)	In.	3/8			
	Gas (Low Pressure) (Flare)	In.	5/8			
Drain Pipe Dimension (O.D.)		In.	1-1/4			
Sound Pressure Levels (As Measured in an Anechoic Room)*3	Low-Mid1-Mid2-High	dB(A)	28 - 30 - 32 - 34	28 - 31 - 33 - 35	35 - 37 - 39 - 41	36 - 39 - 42 - 45

Notes:

*1 Cooling/Heating capacity indicates the maximum value at operation under the following conditions: Cooling | Indoor: 80˚ F (26.7˚ C) DB/67˚ F (19.4˚ C) WB; Outdoor: 95˚ F (35˚ C) DB. Heating | Indoor: 70˚ F (21˚ C) DB; Outdoor: 47˚ F (8˚ C) DB/43˚ F (6˚ C) WB.

*2 Net weight is shown for unit/grille.

*3 Airflow rate/sound pressure levels are at (Low-Mid1-Mid2-High).Ventilation Air: Providing sufficient ventilation air is an important part of every building design ASHRAE Standard 62 provides the minimum ventilation air requirements. Also check local codes.

LIMITED WARRANTY | Seven-year warranty on compressor. One-year warranty on parts. See our website for details on specific additional application installation coverage.

Specifications are subject to change.

PLFY-P**NFMU-E

Model Name			PLFY-P05NFMU-E	PLFY-P08NFMU	PLFY-P12NFMU	PLFY-P15NFMU	PLFY-P18NFMU-E
Power Source			208/230V, 1-phase, 60Hz				
Cooling Capacity		Btu/h *1	5,000	8,000	12,000	15,000	18,000
Heating Capacity		Btu/h *1	5,600	9,000	13,500	17,000	20,000
Power Consumption	Cooling	W	20	20	20	30	40
	Heating	W	20	20	20	30	40
Current	Cooling	A	0.19	0.22	0.23	0.28	0.40
	Heating	A	0.14	0.17	0.18	0.23	0.35
External Finish (Munsell No.)			Grille: White (6.4Y 8.9/0.4)				
Dimensions	Height	In.	8-3/16				
	Width	In.	22-7/16				
	Depth	In.	22-7/16				
Net Weight *2	Unit/Panel	Pounds	28.9/5.3	28.9/5.3	31.3/5.3		
Heat Exchanger			Cross Fin (Aluminum Plate Fin and Copper Tube)				
Fan	Type x Quantity		Turbo Fan x 1				
	Airflow Rate *3	CFM	230-265-280	230-280-315	245-280-335	265-315-390	315-390-460
	Motor Type		Single-phase Induction Motor				
Air Filter			Polypropylene Honeycomb				
Refrigerant Pipe Dimensions	Liquid (High Pressure) (Flare)	In.	1/4				
	Gas (Low Pressure) (Flare)	In.	1/2				
Condensate Lift Mechanism (Standard)		In.	19-11/16				
Drain Pipe Dimension (O.D.)		In.	1-1/4				
Sound Pressure Levels (As Measured in an Anechoic Room) *3	(Low-Mid-High)	dB(A)	26-28-30	26-30-33	26-30-34	28-33-39	33-39-43

Notes:

*1 Cooling/Heating capacity indicates the maximum value at operation under the following conditions: Cooling | Indoor: 80˚ F (27˚ C) D.B./67˚F (19˚ C) W.B.; Outdoor: 95˚F (35˚ C) D.B. Heating | Indoor: 70˚ F (21˚ C) D.B.; Outdoor: 47˚ F (8˚ C) D.B./43˚F (6˚ C) W.B.

*2 Net weight is shown for unit/grille.

*3 Airflow rate/sound pressure levels are at (Low-Mid-High).

Ventilation Air: Providing sufficient ventilation air is an important part of every building design. ASHRAE Standard 62 provides the minimum ventilation air requirements. Also check local codes.

Specifications are subject to change without notice.

LIMITED WARRANTY | Seven-year compressor and one year parts. Extended warranty of up to 10 years is available. See our website for details on specific additional application installation coverage.

SPECIFICATIONS: PMFY
CEILING CASSETTE INDOOR UNIT

PMFY-P**NBMU-ER5

Model Name			PMFY-P06NBMU-ER5	PMFY-P08NBMU-ER5	PMFY-P12NBMU-ER5	PMFY-P15NBMU-ER5
Power Source			208/230V, 1-phase, 60Hz			
Cooling Capacity		Btu/h *1	6,000	8,000	12,000	15,000
Heating Capacity		Btu/h *1	6,700	9,000	13,500	17,000
Power Consumption	Cooling	W	40			50
	Heating	W	40			50
Current	Cooling	A	0.20		0.21	0.26
	Heating	A	0.20		0.21	0.26
External Finish Color (Munsell No.)			Grille: 6.4Y 8.9/0.4			
Dimensions	Height	In.	9-1/16			
	Width	In.	31-31/32			
	Depth	In.	15-9/16			
Net Weight	Unit	Pounds	31			
Heat Exchanger			Cross Fin			
Fan	Type x Quantity		Line flow fan x 1			
	Airflow Rate *2	CFM	230 – 254 – 283 – 307	258 – 283 – 304 – 328	258 – 283 – 304 – 328	272 – 307 – 343 – 378
	Motor Type		DC Brushless Motor			
Air Filter			Polypropylene Honeycomb			
	Liquid (High Pressure) (Flare)	In.	1/4			
Refrigerant Pipe Dimensions	Gas (Low Pressure) (Flare)	In.	1/2			
Condensate Lift Mechanism (Standard)		In.	23-5/8			
Drain Pipe Dimension (O.D.)		In.	1			
Sound Pressure Levels (As Measured in an Anechoic Room) *2	(Low-Mid1-Mid2-High)	dB(A)	27 – 30 – 33 – 35	32 – 34 – 36 – 37	32 – 34 – 36 – 37	33 – 35 – 37 – 39

Notes:

*1 Cooling/Heating capacity indicates the maximum value at operation under the following conditions: Cooling | Indoor: 80° F (27° C) D.B./67° F (19° C) W.B.; Outdoor: 95° F (35° C) D.B. Heating | Indoor: 70° F (21° C) D.B.; Outdoor: 47° F (8° C) DB/43° F (6° C) W.B.

*2 Airflow rate/sound levels are at (Low-Mid1-Mid2-High).

Ventilation Air: Providing sufficient ventilation air is an important part of every building design. ASHRAE standard 62 provides the minimum ventilation air requirements. Also check local codes.

Specifications are subject to change without notice.

LIMITED WARRANTY | Seven-year compressor and one year parts. Extended warranty of up to 10 years is available. See our website for details on specific additional application installation coverage.

SPECIFICATIONS: PCFY
CEILING-SUSPENDED INDOOR UNIT

PCFY-P**NKMU-ER1

Model Name			PCFY-P15NKMU-ER1	PCFY-P24NKMU-ER1	PCFY-P30NKMU-ER1	PCFY-P36NKMU-ER1
Power Source			208/230V, 1 Phase, 60Hz			
Cooling Capacity		Btu/h *1	15,000	24,000	30,000	36,000
Heating Capacity		Btu/h *1	17,000	27,000	34,000	40,000
Power Consumption	Cooling	W	30	40	90	110
	Heating	W	30	40	90	110
Current	Cooling	A	0.35	0.41	0.83	0.97
	Heating	A	0.35	0.41	0.83	0.97
External Finish	Munsell No.		6.4Y 8.9/0.4			
Dimensions	Height	In.	9-1/16			
	Width	In.	37-13/16	50-3/8	63	
	Depth	In.	26-3/4			
Net Weight	Unit	Pounds	53	71	79	84
Heat Exchanger			Cross Fin (Aluminum Plate Fin and Copper Tube)			
Fan	Type x quantity		Sirocco Fan x 2	Sirocco Fan x 3	Sirocco Fan x 4	
	Airflow Rate *2	CFM	353 – 388 – 424 – 459	494 – 530 – 565 – 636	703 – 777 – 883 – 989	742 – 847 – 953 – 1,095
	Motor Type		Direct - driven DC Motor			
Air Filter			Polypropylene Honeycomb			
Refrigerant Pipe Dimensions	Liquid (High Pressure) (Flare)	In.	1/4	3/8		
	Gas (Low Pressure) (Flare)	In.	1/2	5/8		
Drain Pipe Dimension (O.D.)		In.	1			
Sound Pressure Levels *2	Lo-Mid1-Mid2-Hi	dB(A)	29 – 32 – 34 – 36	31 – 33 – 35 – 37	34 – 37 – 40 – 43	36 – 39 – 42 – 44

Note:

*1 Cooling/Heating Capacity indicates the maximum value at operation under the following conditions: Cooling | Indoor: 80° F (27° C) D.B./67° F (19° C) W.B.; Outdoor 95° F (35° C) D.B. Heating | Indoor: 70° F (21° C) D.B.; Outdoor: 45° F (7° C) D.B./43° F (6° C) W.B.

*2 Airflow rate/sound pressure levels are at Low-Mid1-Mid2-Hi.

Ventilation Air: Providing sufficient ventilation air is an important part of every building design ASHRAE Standard 62 provides the minimum air requirements. Also check local codes.

Specifications are subject to change without notice.

LIMITED WARRANTY | Seven-year compressor and one year parts. Extended warranty of up to 10 years is available. See our website for details on specific additional application installation coverage.

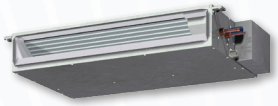

PEFY-P**NMSU-ER2

Model Name			PEFY-P06NM-SU-ER2* 1	PEFY-P08NM-SU-ER2	PEFY-P12NM-SU-ER2	PEFY-P15NM-SU-ER2	PEFY-P18NM-SU-ER2	PEFY-P24NM-SU-ER2
Power Source			208/230V, 1-phase, 60Hz					
Cooling Capacity *2		Btu/h	6,000	8,000	12,000	15,000	18,000	24,000
Heating Capacity *2		Btu/h	6,700	9,000	13,500	17,000	20,000	27,000
Power Consumption	Cooling	W	50/50	60/60	70/70		90/90	120/120
	Heating	W	30/30	40/40	50/50		70/70	100/100
Current	Cooling	A	0.42/0.41	0.51/0.49	0.56/0.53	0.57/0.55	0.74/0.70	0.98/0.93
	Heating	A	0.32/0.31	0.41/0.39	0.46/0.43	0.47/0.45	0.64/0.60	0.88/0.83
External Finish			Galvanized Steel Sheets					
Dimensions	Height	In.	7-7/8					
	Width	In.	31-1/8			39		46-7/8
	Depth	In.	27-9/16					
Net Weight	Unit	Pounds	42		46	54		62
Heat Exchanger			Cross Fin (Aluminum Plate Fin and Copper Tube)					
Fan	Type x Quantity		Sirocco Fan x 2			Sirocco Fan x 3		Sirocco Fan x 4
	Airflow Rate *3	CFM	176 – 212 – 247	194 – 247 – 317	211 – 282 – 370	282 – 335 – 388	353 – 441 – 529	423 – 565 – 706
	External Static Pressure *4	In. W.G.	0.02 – 0.06 – 0.14 – 0.20					
	Motor Type		DC Brushless Motor					
Air Filter			Polypropylene Honeycomb Fabric (washable)					
Refrigerant Pipe Dimensions	Liquid (High Pressure) (Brazed)	In.	1/4					3/8
	Gas (Low Pressure) (Brazed)	In.	1/2					5/8
Condensate Lift Mechanism (standard)		In.	21 – 4/16					
Drain Pipe Dimensions (O.D.)		In.	1 – 1/4					
Sound Pressure Levels *3	Low-Mid-High	dB(A)	22 – 24 – 28	23 – 26 – 30	23 – 28 – 35	28 – 30 – 33	30 – 34 – 37	30 – 35 – 40

Notes:

*1 Not compatible with PUHY/PURY-P-TGMU or PQHY/PQRY-P-TGMU units.

*2 Cooling/Heating capacity indicates the maximum value at operation under the following conditions: Cooling | Indoor: 80˚ F (27˚ C) D.B./67˚ F (19˚ C) W.B.; Outdoor: 95˚ F (35˚ C) D.B. Heating | Indoor: 70˚ F (21˚ C) D.B.; Outdoor: 47˚ F (8˚ C) D.B./43˚F (6˚ C) W.B.

*3 Airflow rate/sound pressure levels are at (Low-Mid-High).

*4 External static pressure is factory set to 0.06" W.G.

Ventilation Air: Providing sufficient ventilation air is an important part of every building design ASHRAE Standard 62 provides the minimum air requirements. Also check local codes.

Specifications are subject to change without notice.

LIMITED WARRANTY | Seven-year compressor and one year parts. Extended warranty of up to 10 years is available. See our website for details on specific additional application installation coverage.

PEFY-P**NMAU-E3

Model Name			PE-FY-P06NMAU-E3	PE-FY-P08NMAU-E3	PE-FY-P12NMAU-E3	PE-FY-P15NMAU-E3	PE-FY-P18NMAU-E3	PE-FY-P24NMAU-E3
Power Source			208/230V, 1-Phase, 60Hz					
Cooling Capacity		Btu/h *1	6,000	8,000	12,000	15,000	18,000	24,000
Heating Capacity		Btu/h *1	6,700	9,000	13,500	17,000	20,000	27,000
Power Consumption	Cooling	W	60		90		110	170
	Heating	W	40		70		90	150
Current	Cooling	A	0.56/0.52		0.66/0.62	0.67/0.63	0.77/0.73	1.31/1.27
	Heating	A	0.45/0.41		0.55/0.51	0.56/0.52	0.66/0.62	1.20/1.16
External Finish			Galvanized Steel Sheet					
Dimensions	Height	In.	9-7/8					
	Width	In.	27-9/16			35-7/16		43-5/16
	Depth	In.	28-7/8					
Net Weight	Unit	Pounds	49			58		67
Heat Exchanger			Cross Fin (Aluminum plate fin and copper tube)					
Fan	Type x Quantity		Sirocco Fan x 1					Sirocco Fan x 2
	Airflow Rate *2	CFM	212 – 265 – 300		265 – 318 – 371	353 – 424 – 494	424 – 512 – 600	618 – 742 – 883
	External Static Pressure	In. W.G.	0.14 – 0.20 – 0.28 – 0.40 – 0.60					
	Motor Type		Direct-driven DC Brushless Motor					
Air Filter			Polypropylene Honeycomb					
Refrigerant Pipe Dimensions	Liquid (High Pressure) (Brazed)	In.	1/4					3/8
	Gas (Low Pressure) (Brazed)	In.	1/2					5/8
Drain Pipe Dimension (O.D.)		In.	1-1/4"					
Sound Pressure Levels	Lo-Mid-Hi	dB(A)	26 – 28 – 29		28 – 30 – 34		26 – 28 – 29	

Model Name			PEFY-P27NMAU-E3	PEFY-P30NMAU-E3	PEFY-P36NMAU-E3	PEFY-P48NMAU-E3	PEFY-P54NMAU-E3
Power Source			208/230V, 1-Phase, 60Hz				
Cooling Capacity		Btu/h *1	27,000	30,000	36,000	48,000	54,000
Heating Capacity		Btu/h *1	30,000	34,000	40,000	54,000	60,000
Power Consumption	Cooling	W	170		240	340	360
	Heating	W	150		220	320	340
Current	Cooling	A	1.31/1.27		1.50/1.46	2.08/2.04	2.24/2.2
	Heating	A	1.20/1.16		1.39/1.35	1.97/1.93	2.13/2.09
External Finish			Galvanized Steel Sheet				
Dimensions	Height	In.	9-7/8				
	Width	In.	43-5/16		55-1/8		63
	Depth	In.	28-7/8				
Net Weight	Unit	Pounds	67		86		93
Heat Exchanger			Cross Fin (Aluminum plate fin and copper tube)				
Fan	Type x Quantity		Sirocco Fan x 2				
	Airflow Rate *2	CFM	618 – 742 – 883		812 – 989 – 1,165	989 – 1,201 – 1,412	1,042 – 1,254 – 1,483
	External Static Pressure	In. W.G.	0.14 – 0.20 – 0.28 – 0.40 – 0.60				
	Extended Static Motor Type		Direct-driven DC Brushless Motor				
Air Filter			Polypropylene Honeycomb				
Refrigerant Pipe Dimensions	Liquid (High Pressure) (Brazed)	In.	3/8				
	Gas (Low Pressure) (Brazed)	In.	5/8				
Drain Pipe Dimension (O.D.)		In.	1-1/4				
Sound Pressure Levels	Lo-Mid-Hi	dB(A)	28 – 30 – 34v		32 – 37 – 41	35 – 40 – 44	36 – 41 – 45

Notes:

*1 Cooling/Heating Capacity indicates the maximum value at operation under the following conditions: Cooling | Indoor: 80° F (27° C) D.B./67° F (19° C) W.B.; Outdoor 95° F (35° C) D.B. Heating | Indoor: 70° F (21° C) D.B.; Outdoor: 45° F (7° C) D.B./43° F (6° C) W.B.

*2 Airflow rate/sound pressure levels are at Low-Mid-Hi.

Ventilation Air: Providing sufficient ventilation air is an important part of very buildin design ASHRAE Standard 62 provides the minimum air requirements. Also check local codes.

Specifications are subject to change without notice.
LIMITED WARRANTY | Seven-year compressor and one year parts. Extended warranty of up to 10 years is available. See our website for details on specific additional application installation coverage.

PEFY-P**NMH(S)U-E(2)

Model Name			PEFY-P15NMHU-E2	PEFY-P18NMHU-E2	PEFY-P24NMHU-E2	PEFY-P27NMHU-E2	PEFY-P30NMHU-E2
Power Source			208/230V, 1-phase, 60Hz				
Cooling Capacity *1		Btu/h	15,000	18,000	24,000	27,000	30,000
Heating Capacity *1		Btu/h	17,000	20,000	27,000	30,000	34,000
Power Consumption	Cooling	W	270/280	270/280	330/320	390	450
	Heating	W	250/260	250/260	310/300	370	430
Current	Cooling	A	1.32/1.25	1.32/1.25	1.61/1.43	1.90/1.73	2.20/2.00
	Heating	A	1.21/1.14	1.21/1.14	1.50/1.32	1.79/1.62	2.09/1.89
External Finish			Unit: Galvanized Steel Plate				
Dimensions	Height	In.	15	15	15	15	15
	Width	In.	29-3/8	29-3/8	29-3/8	40-9/16	40-9/16
	Depth	In.	35-7/16	35-7/16	35-7/16	35-7/16	35-7/16
Net Weight	Unit	Pounds	98	98	100	124	124
Heat Exchanger			Cross Fin (Aluminum Plate Fin and Copper Tube)				
Fan	Type x Quantity		Sirocco Fan x 1	Sirocco Fan x 1	Sirocco Fan x 1	Sirocco Fan x 1	Sirocco Fan x 2
	Airflow Rate *2	CFM	353 – 494	353 – 494	477 – 671	547 – 777	636 – 883
	Ext. Static Pressure (208/230V)	In. W.G.	0.40 – 1.00/0.60 – 1.00				
	Motor Type		Single-phase Induction Motor				
Air Filter			Optional Part				
Refrigerant Pipe Dimensions	Liquid (High Pressure) (Flare)	In.	1/4	1/4	3/8	3/8	3/8
	Gas (Low Pressure) (Flare)	In.	1/2	1/2	5/8	5/8	5/8
Drain Pipe Dimension (O.D.)		In.	1 – 1/4	1 – 1/4	1 – 1/4	1 – 1/4	1 – 1/4
Sound Pressure Levels (Low-High) *2		dB(A) at 230V	39 – 45	39 – 45	40 – 46	38 – 44	38 – 43

Model Name			PEFY-P36NMHU-E2	PEFY-P48NMHU-E2	PEFY-P54NMHU-E2	PEFY-P72NMHSU-E	PEFY-P96NMHSU-E
Power Source			208/230V, 1-phase, 60Hz				
Cooling Capacity *1		Btu/h	36,000	48,000	54,000	72,000	96,000
Heating Capacity *1		Btu/h	40,000	54,000	60,000	80,000	108,000
Power Consumption	Cooling	W	620/610	620/610	630/620	63	82
	Heating	W	600/590	600/590	610/600	63	82
Current	Cooling	A	3.10/2.74	3.10/2.74	3.11/2.78	3.67/3.32	4.89/4.43
	Heating	A	2.99/2.63	2.99/2.63	3.00/2.67	3.67/3.32	4.89/4.43
External Finish			Unit: Galvanized Steel Plate				
Dimensions	Height	In.	15	15	15	18-9/16	
	Width	In.	47-1/16	47-1/16	47-1/16	49-1/4	
	Depth	In.	35-7/16	35-7/16	35-7/16	44-1/8	
Net Weight	Unit	Pounds	153	153	157	214	221
Heat Exchanger			Cross Fin (Aluminum Plate Fin and Copper Tube)				
Fan	Type x Quantity		Sirocco Fan x 2	Sirocco Fan x 2	Sirocco Fan x 2	Sirocco Fan x 2	Sirocco Fan x 2
	Airflow Rate *2	CFM	936 – 1,342	936 – 1,342	989 – 1,412	1,766 – 2,154 – 2,542	2,048 – 2,507 – 2,966
	Ext. Static Pressure (208/230V)	In. W.G.	0.40 – 1.00/0.60 – 1.00			0.20 – 0.40 – 0.60 – 0.80 – 1.00	
	Motor Type		Single-phase Induction Motor			DC Motor	
Air Filter			Optional Part				
Refrigerant Pipe Dimensions	Liquid (High Pressure)	In.	3/8 (Flare)	3/8 (Flare)	3/8 (Flare)	3/8 (Brazed)	3/8 (Brazed)
	Gas (Low Pressure)	In.	5/8 (Flare)	5/8 (Flare)	5/8 (Flare)	3/4 (Brazed)	7/8 (Brazed)
Drain Pipe Dimension (O.D.)		In.	1-1/4	1-1/4	1-1/4	1-1/4	1-1/4
Sound Levels *2 (Low-High or Low-Mid-High)		dB(A) at 230V	40 – 46	40 – 46	41 – 47	36 – 39 – 43	39 – 42 – 46

Notes:

*1 Cooling/Heating capacity indicates the maximum value at operation under the following conditions:
Cooling | Indoor: 80° F (27° C) D.B./67° F (19° C) W.B. ; Outdoor: 95° F (35° C) D.B.
Heating | Indoor: 70° F (21° C) D.B. ; Outdoor: 45° F (7° C) D.B./43° F (6° C) W.B.

*2 Airflow rate/sound levels are at (Low-High).

Ventilation Air: Providing sufficient ventilation air is an important part of every building design ASHRAE standard 62 provides the minimum ventilation air requirments. Also check local codes.

Specifications are subject to change without notice.

LIMITED WARRANTY | Seven-year compressor and one year parts. Extended warranty of up to 10 years is available. See our website for details on specific additional application installation coverage.

SPECIFICATIONS: PFFY-P-NEMU/NRMU
FLOOR-STANDING INDOOR UNIT

PFFY-P**N(E,R)MU-E

Model			PFFY-P06NEMU-E	PFFY-P08NEMU-E	PFFY-P12NEMU-E	PFFY-P15NEMU-E	PFFY-P18NEMU-E	PFFY-P24NEMU-E
Power Source			208/230V, 1 Phase, 60Hz					
Cooling Capacity		Btu/h *1	6,000	8,000	12,000	15,000	18,000	24,000
Heating Capacity		Btu/h *1	6,700	9,000	13,500	17,000	20,000	27,000
Power Consumption	Cooling	W	51/61	51/61	55/67	65/78	78/93	96/114
	Heating	W	51/61	51/61	55/67	65/78	78/93	96/114
Current	Cooling	A	0.25/0.27	0.25/0.27	0.27/0.30	0.32/0.35	0.38/0.42	0.47/0.51
	Heating	A	0.25/0.27	0.25/0.27	0.27/0.30	0.32/0.35	0.38/0.42	0.47/0.51
External Finish (Munsell No.)			Acrylic Painted (5Y 8/1)					
Dimensions	Height	In.	24-13/16	24-13/16	24-13/16	24-13/16	24-13/16	24-13/16
	Width	In.	41-11/32	41-11/32	46-3/32	46-3/32	55-17/32	55-17/32
	Depth	In.	8-11/16	8-11/16	8-11/16	8-11/16	8-11/16	8-11/16
Net Weight	Unit	Pounds	67	67	71	73	84	89
Heat Exchanger			Cross Fin (Aluminum Plate Fin and Copper Tube)					
Fan	Type x Quantity		Sirocco Fan x 1	Sirocco Fan x 1	Sirocco Fan x 2	Sirocco Fan x 2	Sirocco Fan x 2	Sirocco Fan x 2
	Airflow Rate *2	CFM	194 – 229	194 – 229	247 – 317	300 – 388	353 – 459	353 – 494
	Motor Type		Single Phase Induction Motor					
	Motor Output	W	15	15	18	30	35	63
Air Filter			Standard Filter					
Refrigerant Pipe Dimension	Liquid (High Pressure) (Flare)	In.	1/4	1/4	1/4	1/4	1/4	3/8
	Gas (Low Pressure) (Flare)	In.	1/2	1/2	1/2	1/2	1/2	5/8
Drain Pipe Dimension		In.	O.D. 1-3/32					
Sound Levels *2	(Low-High)	dB(A)	36 – 41	36 – 41	37 – 41	38 – 43	38 – 43	40 – 46

Notes:

*1 Cooling/Heating capacity indicates the maximum value at operation under the following conditions:
Cooling | Indoor: 80° F (27° C) D.B./67° F (19° C) W.B. ; Outdoor: 95° F (35° C) D.B.
Heating | Indoor: 70° F (21° C) D.B. ; Outdoor: 45° F (7° C) D.B./43° F (6° C) W.B.

*2 Airflow rate/sound levels are at (Low-High).

Ventilation Air: Providing sufficient ventilation air is an important part of every building design ASHRAE standard 62 provides the minimum ventilation air requirements. Also check local codes.

Specifications are subject to change without notice.

LIMITED WARRANTY | Seven-year compressor and one year parts. Extended warranty of up to 10 years is available. See our website for details on specific additional application installation coverage.

PFFY-P**N(E,R)MU-E

Model			PFFY-P06NRMU-E	PFFY-P08NRMU-E	PFFY-P12NRMU-E	PFFY-P15NRMU-E	PFFY-P18NRMU-E	PFFY-P24NRMU-E
Power Source			208/230V, 1 Phase, 60Hz					
Cooling Capacity		Btu/h *1	6,000	8,000	12,000	15,000	18,000	24,000
Heating Capacity		Btu/h *1	6,700	9,000	13,500	17,000	20,000	27,000
Power Consumption	Cooling	W	51/61	51/61	55/67	65/78	78/93	96/114
	Heating	W	51/61	51/61	55/67	65/78	78/93	96/114
Current	Cooling	A	0.25/0.27	0.25/0.27	0.27/0.30	0.32/0.35	0.38/0.42	0.47/0.51
	Heating	A	0.25/0.27	0.25/0.27	0.27/0.30	0.32/0.35	0.38/0.42	0.47/0.51
External Finish (Munsell No.)			Galvanized Sheet Metal					
Dimensions	Height	In.	25-3/16	25-3/16	25-3/16	25-3/16	25-3/16	25-3/16
	Width	In.	34-29/32	34-29/32	39-5/8	39-5/8	49-1/16	49-1/16
	Depth	In.	8-11/16	8-11/16	8-11/16	8-11/16	8-11/16	8-11/16
Net Weight	Unit	Pounds	51	51	58	60	69	71
Heat Exchanger			Cross Fin (Aluminum Plate Fin and Copper Tube)					
Fan	Type x Quantity		Sirocco Fan x 1	Sirocco Fan x 1	Sirocco Fan x 2	Sirocco Fan x 2	Sirocco Fan x 2	Sirocco Fan x 2
	Airflow Rate *2	CFM	194 – 229	194 – 229	247 – 317	300 – 388	353 – 459	353 – 494
	Motor Type		Single Phase Induction Motor					
	Motor Output	kW	0.015	0.015	0.018	0.030	0.035	0.063
Air Filter			Standard Filter					
Refrigerant Pipe Dimension	Liquid (High Pressure) (Flare)	In.	1/4	1/4	1/4	1/4	1/4	3/8
	Gas (Low Pressure) (Flare)	In.	1/2	1/2	1/2	1/2	1/2	5/8
Drain Pipe Dimension		In.	O.D. 1-3/32					
Sound Levels *2	(Low-High)	dB(A)	36 – 41	36 – 41	37 – 41	38 – 43	38 – 43	40 – 46

Notes:

*1 Cooling/Heating capacity indicates the maximum value at operation under the following conditions:
Cooling | Indoor: 80° F (27° C) D.B./67° F (19° C) W.B. ; Outdoor: 95° F (35° C) D.B.
Heating | Indoor: 70° F (21° C) D.B. ; Outdoor: 45° F (7° C) D.B./43° F (6° C) W.B.

*2 Airflow rate/sound levels are at (Low-High).

Ventilation Air: Providing sufficient ventilation air is an important part of every building design ASHRAE standard 62 provides the minimum ventilation air requirements. Also check local codes.

Specifications are subject to change without notice.

LIMITED WARRANTY | Seven-year compressor and one year parts. Extended warranty of up to 10 years is available. See our website for details on specific additional application installation coverage.

SPECIFICATIONS: PVFY
MULTI-POSITION AIR HANDLER

PVFY-P**NAMU-E1

Model Name			PVFY-P12NA-MU-E1	PVFY-P18NA-MU-E1	PVFY-P24NA-MU-E1	PVFY-P30NA-MU-E1	PVFY-P36NA-MU-E1	PVFY-P48NA-MU-E1	PVFY-P54NA-MU-E1
Power Source			208/230V, 1-phase, 60Hz						
Cooling Capacity		Btu/h *1	12,000	18,000	24,000	30,000	36,000	48,000	54,000
Heating Capacity		Btu/h *1	13,500	20,000	27,000	34,000	40,000	54,000	60,000
Dimensions	Height	In.	50-1/4			54-1/4		59-1/2	
	Width	In.	17			21		25	
	Depth	In.	21-5/8						
Net Weight	Unit	Pounds	113			141		172	
Heat Exchanger			Cross fin (Aluminum fin and copper tube)						
Fan	Type x Qty.		Sirocco fan x 1						
	Airflow Rate *2	CFM	280 – 340 – 400	410 – 497 – 585	515 – 625 – 735	613 – 744 – 875	767 – 931 – 1,095	980 – 1,190 – 1,400	1,040 – 1,262 – 1,485
	External Static Pressure	In. W.G.	0.30 – 0.50 – 0.80 (selectable)						
	Motor Type		DC motor						
Filter			Polypropylene Honeycomb						
Refrigerant Pipe Dimensions	Liquid (High Pressure) (Brazed)	In.	1/4		3/8				
	Gas (Low Pressure) (Brazed)	In.	1/2		5/8				
Drain Pipe Dimensions		In.	3/4 FPT						
Sound Pressure Levels (As Measured in an Anechoic Room) *2	Pressure	dB(A)	27 – 31 – 35	28 – 32 – 36	30 – 34 – 38	32 – 36 – 40	35 – 39 – 43	35 – 39 – 43	36 – 40 – 44

Notes:

*1 Cooling/Heating capacity indicates the maximum value at operation under the following conditions:
Cooling | Indoor: 80˚ F (27˚ C) D.B./67˚ F (19˚ C) W.B.; Outdoor: 95˚ F (35˚ C) D.B.
Heating | Indoor: 70˚ F (21˚ C) D.B.; Outdoor: 47˚F (8˚ C) D.B./43˚F (6˚ C) W.B.

*2 Airflow rate/sound pressure levels are at (Low-Med-High).

Ventilation Air: Providing sufficient ventilation air is an important part of every building design. ASHRAE standard 62 provides the minimum ventilation air requirements. Also check local codes.

Specifications are subject to change without notice.

LIMITED WARRANTY | Seven-year compressor and one year parts. Extended warranty of up to 10 years is available. See our website for details on specific additional application installation coverage

VENTILATION SPECIFICATIONS

Lossnay® Energy Recovery Ventilators (ERVs)/DOAS

UBER ADVANCED TECHNOLOGIES GROUP

PITTSBURGH, PA

SPECIFICATIONS: LOSSNAY®
ENERGY RECOVERY VENTILATOR (ERV)

LGH-F***RVX-E

Model Name			LGH-F300RVX-E	LGH-F470RVX-E	LGH-F600RVX-E	LGH-F1200RVX-E
Capacity		CFM (m3/h)	300 (510)	470 (799)	600 (1019)	1200 (2039)
Power Source			1-phase 208/230V 60Hz			
Power Consumption		kW	0.012 - 0.155	0.031 - 0.348	0.034 - 0.438	0.08 - 0.88
Current		A	0.22 - 1.17	0.39 - 2.15	0.28 - 2.70	0.60 - 5.40
Starting Current		A	6.1			12.2
Minimum Circuit Ampacity (MCA)		A	2.05	3.1	3.45	6.4
Maximum Overcurrent Protection (MOCP)		A	15			
Fan	Air Volume	CFM (m3/h)	75-150-225-300 (127-255-382-510)	118-235-353-470 (200-399-599-799)	150-300-450-600 (255-510-765-1019)	300-600-900-1200 (510-1019-1529-2039)
	External Static Pressure	In. W.G.	0.03-0.12-0.26-0.46	0.04-0.15-0.34-0.60	0.04-0.16-0.37-0.66	0.04-0.15-0.33-0.59
Exchange Efficiency	Temperature	%	83-76-70-65.5	84.5-77.5-73-69	81-76.5-73-67	
	Enthalpy Cooling	%	65-58-53.5-50	72-64-57-51	71-64.5-56.5-50	
	Enthalpy Heating	%	81.5-74-66.5-63	83-75-69-64	80-74.5-68.5-64	
External Finish			Galvanized Steel Sheet			
External Dimensions (H x W x D)		In.	13-1/32 x 41-7/8 x 41-3/16	15-29/32 x 41-3/8 x 51-5/16	15-29/32 x 50-5/16 x 51-5/16	31-13/16 x 50-1/8 x 51-5/16
		mm	331 x 1063 x 1046	404 x 1051 x 1302	404 x 1278 x 1302	808 x 1272 x 1302
Net Weight		lbs	75	110	123	251
		kg	34	50	56	114
Energy Transfer Mechanism			Lossnay® Core			
Heat Exchange Material			Partition, Spacing Plate-Cellulose Fiber Membrane			
Heat Exchange System			Air-To-Air Total Heat (Sensible Heat + Latent Heat) Exchange, No Moving Parts			
Blower Type			8-3/4 In. Diameter Centrifugal Fan	9-5/8 In. Diameter Centrifugal Fan		
Motor Type			EC Motor			
Filter			Non-Woven Fabric Filter, Washable Fiber			
Entering Air Temperature Operation Range			14° F To 104° F (-10° C To 40° C), Rh 80% Or Less			
Sound Pressure Level		dB(A)	18.0-22.0-28.0-34.0	18.0-23.0-30.0-34.5	18.0-23.0-31.0-37.0	19.5-28.0-36.0-41.0

Specifications are subject to change without notice.

LIMITED WARRANTY | Seven-year compressor and one year parts. Extended warranty of up to 10 years is available. See our website for details on specific additional application installation coverage

PEFY-AF

Model Name			PEFY-AF1200CFMR
Power Source			
Cooling Capacity		Btu/h *1	112,000
Heating Capacity		Btu/h *1	61,400
Reheat Capacity		Btu/h	24, 200
Power Consumption	Cooling	W	660/780
	Heating	W	660/780
Current	Cooling	A	3.19/3.45
	Heating	A	3.19/3.45
External Finish			Galvanized
Dimensions	Height	In.	18-9/16
	Width	In.	49-1/4
	Depth	In.	55-1/8
Net Weight	Unit	Pounds	309
Heat Exchanger			Cross Fin (Aluminum Plate Fin and Copper Tube)
Fan	Type x quantity		Sirocco Fan x 2
	Airflow Rate *2	CFM	1,200
	External Static Pressure	In. WG	0.28 – 0.48 – 0.80 (208V)
			0.52 – 0.72 – 0.96 (230V)
	Motor Type		Single-phase Induction Motor
Air Filter			Field Supply
Main Coil Refrigerant Pipe Dimensions	Liquid (High Pressure) (Flare)	In.	3/8
	Gas (Low Pressure) (Flare)	In.	7/8
Reheat Coil Refrigerant Pipe Dimensions	Liquid (High Pressure) (Flare)	In.	7/8
	Gas (Low Pressure) (Flare)	In.	3/8
Drain Pipe Dimension (O.D.)		In.	1-1/4 x 2
Sound Pressure Level *3	Low-Mid-High	dB(A)	36-38-41 (208V)
			39-41-43 (230V)
Operating Temperature Range	Cooling		50° F WB to 95° F WB (109° F DB) (10° C WB to 35° C WB [43° C DB])
	Heating		-4° F WB to +60° F WB (-20° C WB to +15.5° C WB)
Connectable Outdoor Unit			PURY-P120TLMU-A (-BS), PURY-P120YLMU-A (-BS) PURY-P120TKMU-A (-BS), PURY-P120YKMU-A (-BS)

Notes:

*1 Cooling/Heating Capacity indicates the maximum value at operation under the following conditions:
Cooling | Entering Indoor Unit: 87° F (31° C) D.B./80° F (27° C) W.B.
Cooling | Outdoor Unit: 87° F (31° C) D.B.
Heating | Entering Indoor Unit: 32° F (0° C) D.B.
Heating | Outdoor Unit: 32° F (0° C) D.B./28° F (-2° C) W.B.

Ventilation Air: Providing sufficient ventilation air is an important part of very building design ASHRAE Standard 62 provides the minimum air requirements. Also check local codes.

Specifications are subject to change without notice.

LIMITED WARRANTY | Seven-year compressor and one year parts. Extended warranty of up to 10 years is available. See our website for details on specific additional application installation coverage

SPECIFICATIONS: PEFY-OA

CEILING-CONCEALED INDOOR UNIT OUTSIDE AIR APPLICATIONS

PEFY-P**NMHU-E-OA

Model Name			PEFY-P36NMHU-E-OA	PEFY-P48NMHU-E-OA	PEFY-P72NMHU-E-OA	PEFY-P96NMHU-E-OA
Power Source			208/230V, 1-Phase, 60Hz			
Cooling Capacity		Btu/h *1	36,000	48,000	72,000	96,000
Heating Capacity		Btu/h *1	21,000	28,000	43,000	57,000
Power Consumption	Cooling	kW	0.130	0.180	0.220	0.320
	Heating	kW	0.140	0.200	0.240	0.330
Current	Cooling	A	1.25	1.59	1.86	2.56
	Heating	A	1.09	1.46	1.70	2.42
Temperature Range	Cooling *2	°F	63~118°F D.B.			
	Heating *3	°F	14~59°F D.B.			
External Finish			Galvanized steel sheet			
Dimensions	Height	In.	15	15	18-9/16	18-9/16
	Width	In.	47-1/16	47-1/16	49-1/4	49-1/4
	Depth	In.	35-7/16	35-7/16	44-1/8	44-1/8
Net Weight	Unit	Pounds	109	109	177	177
Heat Exchanger			Cross fin (Aluminum fin and copper tube)			
Fan	Type x Quantity		Sirocco fan x 1	Sirocco fan x 1	Sirocco fan x 2	Sirocco fan x 2
	Airflow Rate *4	CFM	350 - 400 - 450	500 - 550 - 600	700 - 800 - 900	1,000 - 1,100 - 1,200
	Motor Type		DC Motor			
	Motor Output	kW	0.244	0.244	0.375	0.375
Air Filter			Field Supply			
Refrigerant Pipe Dimensions	Liquid (High Pressure) (Brazed)	In.	3/8			
	Gas (Low Pressure) (Brazed)	In.	5/8	5/8	3/4	7/8
Drain Pipe Dimension (O.D.)		In.	O.D. 1-1/4 x2			
Sound Pressure Levels (As Measured in an Anechoic Room)*3	Low-Mid-High	dB(A)	35-38-40	38-40-41	34-38-42	39-41-44

NOTES

1. Capacity indicates the maximum value at operation under the following condition. Cooling: Indoor 91°F (32.7°C)DB/82°F (27.8°C)WB, Outdoor 91°F (32.7°C)DB. The set temperature of the remote controller is 63°F (17.2°C). Heating: Indoor 32°F (0°C)DB/27°F (-2.9°C)WB, Outdoor 32°F (0°C) DB/27°F (-2.9°C)WB. The set temperature of the remote controller is 77°F (25°C).
2. Thermo-off (FAN-mode) automatically starts if the outdoor temperature is lower than 63°F (17.2°C)D.B. The fan speed automaticall runs at a very low speed if the outdoor temperature is greater than 109°F (42.8°C)D.B.
3. Thermo-off (FAN-mode) automatically starts if the outdoor temperature is higher than 59°F (15.0°C)D.B.
4. If the airflow rate is over the usable range, dew drops can be caused from the air outlet and the air flow rate is changed automatically because of the output down by the fan motor control. If the air flow rate is less than the usable range, condensation from the unit surface may occur.

• The maximum connectable indoor units to 1 outdoor unit are 110% (100% in case of heating below 23°F (-5°C)).
• When fresh air intake type indoor units connect to an outdoor unit together with other types of indoor unit, the total capacity of fresh air intake type indoor units needs to be 30% or less of the connected outdoor unit capacity.
• Un-conditioned outdoor air such as humid air or cold air blows to the indoor during thermo off operation. Please be careful when positioning indoor unit air outlet grilles, ie take the necessary precautions for cold air, and also insulate rooms for dew condensation prevention as required.
• Fresh air intake type indoor units cannot be connected to PUMY and cannot be connected to an outdoor unit together with PWFY series.
• See data book and technical service manual for more details and system restrictions.

CITY MULTI
MITSUBISHI ELECTRIC
CITY MULTI
MITSUBISHI ELECTRIC
CITY MULTI

© 2020 Mitsubishi Electric Trane HVAC US. All rights reserved.

Mitsubishi Electric, Lossnay, and the three-diamond logo are trademarks of Mitsubishi Electric Corporation. CITY MULTI, kumo cloud and H2i are registered trademarks of Mitsubishi Electric US, Inc. Trane and American Standard are registered trademarks of Ingersoll-Rand plc. All other product names mentioned herein are trademarks or registered trademarks of their respective owners.

ENERGY STAR and the ENERGY STAR mark are registered trademarks owned by the United States Environmental Protection Agency.

Use of the AHRI Certified™ mark indicates a manufacturer's participation in the certification program. For verification of certification for individual products, go to www.ahridirectory.org.

Specifications shown in this brochure are subject to change without notice. See complete warranty for terms, conditions and limitations. A copy is available from Mitsubishi Electric Trane HVAC US LLC.

SKU: ME-CM-0788 | 07.2020 | Printed in the USA

Please Recycle.

For more information visit
Visit MitsubishiPro.com

MECHANICAL INSULATION

MICRO-LOK® *HP* ULTRA

HIGH-PERFORMANCE FIBERGLASS PIPE INSULATION

DATA SHEET

DESCRIPTION

Micro-Lok® *HP* Ultra fiberglass pipe insulation is a high-performance pipe insulation with a polypropylene-coated factory-applied vapor-barrier jacket. Micro-Lok *HP* Ultra is made from biosoluble glass fibers bonded with a thermosetting resin and produced in 36" (0.92 m) lengths and is used to insulate standard iron pipe, plastic pipe and copper tubing. The polypropylene-coated jacket includes a longitudinal, self-sealing closure lap and matching butt strip. The jacket system is adhered to each fiberglass section using a specially formulated adhesive to ensure jacket securement.

The factory-installed tape system permits installation at ambient temperatures down to 20°F (-7°C) and will not soften or separate when exposed to high ambient temperatures and humidity.

USES

Micro-Lok *HP* Ultra fiberglass pipe insulation is suitable for installation over hot, cold, concealed and exposed piping systems with operating temperatures up to 850°F (454°C). Weather-protective jacketing is required for outdoor applications. Pipe operating below ambient temperature requires all joints to be sealed with factory-applied, self-seal lap and butt strips. Micro-Lok *HP* Ultra is UL listed and labeled over plastic pipes for air plenum applications when used at 1.0" thickness or greater.

The jacketed insulation can also resist temporary exposure to small amounts of liquid water as long as the exposed fiberglass ends have been vapor-sealed. This may potentially allow contractors to install the insulation earlier on a jobsite – before the building envelope has been enclosed. Micro-Lok *HP* Ultra's jacket is cleanable by wiping it down using a soft, damp cloth. Micro-Lok *HP* Ultra is intended for indoor use. Outdoor use of Micro-Lok *HP* Ultra requires separate weather protection.

PHYSICAL PROPERTIES

Service Temp. Range (ASTM C411)	0°F to 850°F (-18°C to 454°C)
Moisture Sorption	<5% by weight
Corrosivity (ASTM C1617)	<5 ppm chloride standard
Shrinkage (ASTM C356)	None
Microbial Growth (ASTM C1338)	Does not promote microbial growth
Surface Burning Characteristics	Composite FHC 25/50 per ASTM E84, NFPA 255, CAN/ULC S102.2
Limited Combustibility	NFPA 90A and 90B
Jacketing (Poly ASJ)	ASTM C1136 (Type I, II, VII, & X)
Water Vapor Permeance (ASTM E96 – Procedure A)	0.01 perms max.
Bursting Strength (ASTM D774)	100 psi (8.7 kg/cm^2)
Tensile Strength (ASTM D828)	75 lbs./in. (13.1 N/mm) width min. (MD) 60 lbs./in. (10.5 N/mm) width min. (CD)

SPECIFICATION COMPLIANCE

- ASTM C547 Type I (Replaced HH-I-558B, Form D, Type III, Class 12, Class 13 up to 850°F (454°C))
- ASTM C585 – Dimension Standard for pipe ID only
- ASTM C1136 (Jacketing) (Replaces HH-B-100B, Type I & II)
- MIL-DTL-32585 Type 1, Form 4, Facing A (unjacketed only)
- MIL-I-22344D, MIL-PRF-22344E
- Coast Guard/IMO Approved 164.109/56/0 (plain, unjacketed only – excluding 7/8 x ½ [22 mm x 13 mm], ½ x ½ [13 mm x 13 mm])
- Bureau of Household Goods and Services CA-T1039 (CO)
- Firestop Assemblies: Meets requirement for jacketed fiberglass pipe insulation product at or above 3.5 pcf.
- ASTM E84, CAN/UL-S102.2 – 25/50 listed and labeled Intertek testing laboratories, listed and labeled Underwriter Laboratories
- ASTM D2863 – Limiting Oxygen Index (LOI) minimum 31
- NRC 1.36, ASTM C795, MIL-I-24244C, MIL-DTL-24244D*

*When ordering material to comply with ASTM C795, NRC 1.36 & MIL-I-24244 a statement of that fact must appear on the purchase order. Specific lot testing will be conducted and a certification of compliance can be provided.

THERMAL CONDUCTIVITY ("K") *

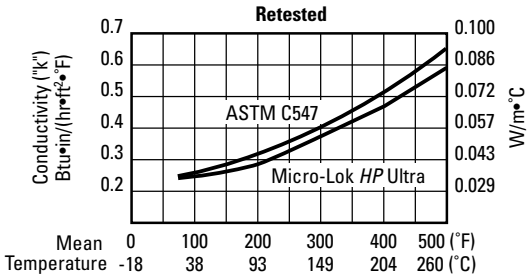

Mean Temperature	°F	75	100	200	300	400	500
	°C	24	38	93	149	204	260
Btu•in/(hr•ft²•°F)		0.23	0.24	0.28	0.34	0.44	0.55
W/m•°C		0.034	0.035	0.040	0.049	0.063	0.079

*Apparent thermal conductivity values are determined by applying procedures dictated per ASTM C1045 on test data obtained using ASTM Test Method C335. All values are based on nominal manufacturing and testing parameters, are subject to normal variation, and are not guaranteed for specification purposes or otherwise.

SUSTAINABLE BUILDING ATTRIBUTES

Manufacturing Location	Defiance, Ohio (43512)	
Recycled Content (glass only)	41%	
Recycled Content (total product)	28%	
Volatile Organic Compounds (ASTM D5116) (Analysis ASTM D6196 & ASTM D5197)	Total	0.15 g/l
Fiberglass Pipe Insulation	Formaldehyde Aldehydes	0.009 ppm 0.009 ppm
Volatile Organic Compounds (Calculated)	Total	<49 g/l
Self-Sealing Lap & Butt Strips		

SUSTAINABLE BUILDING CERTIFICATIONS

GREENGUARD® GREENGUARD® GOLD	Certified Certified
LEED® Credits LEED-NC	To see LEED info call technical support.

GREENGUARD PRODUCT CERTIFIED FOR LOW CHEMICAL EMISSIONS UL.COM/GG UL 2818 GOLD

CERTIFIED RECYCLED CONTENT SCS GLOBAL SERVICES AVERAGE 27% RECYCLED CONTENT POST-CONSUMER

ETL LISTED Intertek

CLASSIFIED UL Insulated Plastic Pipe Assemblies (BSMP)

MICRO-LOK® *HP* ULTRA

HIGH-PERFORMANCE FIBERGLASS PIPE INSULATION

DATA SHEET

SIZE AVAILABILITY

Insulation Thickness		Iron Pipe Size Range		Copper Tubing Size Range	
in.	mm	in.	mm	in.	mm
½	13	½–6	13–152	⅝–4⅛[§]	16–105
1	25	½–24	13–610	⅝–6⅛	16–156
1½	38	½–24	13–610	⅝–6⅛	16–156
2	51	½–24	13–610	1⅛–6⅛	29–156
2½	64	1–24	25–610	1⅜–6⅛	35–156
3	76	1–24	25–610	1⅜–6⅛	35–156
3½	89	1½–24[*]	38–610	–	–
4	102	3–24[**]	76–610	–	–
4½	114	3–24[†]	76–610	–	–
5	127	3–20[††]	76–508	–	–

Notes:

[*] *2½" and 23" IPS not available in this insulation thickness.*

[**] *22" and 23" IPS not available in this insulation thickness.*

[†] *21", 22" and 23" IPS not available in this insulation thickness.*

[††] *19" IPS not available in this insulation thickness.*

[§] *3⅝" CTS not available in this insulation thickness.*

ACOUSTIC - INSERTION LOSS

Insertion loss data for Johns Manville pipe insulation acoustic treatments tested per ASTM E1222

Frequency	1-in Micro-Lok HP Ultra	1-in Micro-Lok HP Ultra with Zeston PVC (20 mil)	1-in Micro-Lok HP Ultra with MLV (1 psf)	2-in Micro-Lok HP Ultra	2-in Micro-Lok HP Ultra with Zeston PVC (20 mil)	2-in Micro-Lok HP Ultra with MLV (1 psf)
Hz	dB	dB	dB	dB	dB	dB
315	2	1	10	1	0	12
400	2	4	13	0	8	17
500	3	5	14	1	10	19
630	5	11	21	6	14	21
800	7	13	20	8	15	22
1000	9	19	25	13	20	29
1250	10	20	28	14	22	31
1600	13	24	33	17	26	37
2000	15	27	35	20	29	39
2500	17	29	36	21	30	38
3150	19	30	36	23	32	40
4000	20	29	36	26	34	41
5000	22	30	36	29	34	38

ACOUSTIC - TRANSMISSION LOSS

Transmission loss data and sound transmission class (STC) for Johns Manville pipe insulation acoustic treatments tested per ASTM E90

Frequency	1-in Micro-Lok HP Ultra	1-in Micro-Lok HP Ultra with Zeston PVC (20 mil)	1-in Micro-Lok HP Ultra with MLV (1 psf)	2-in Micro-Lok HP Ultra	2-in Micro-Lok HP Ultra with Zeston PVC (20 mil)	2-in Micro-Lok HP Ultra with MLV (1 psf)
Hz	dB	dB	dB	dB	dB	dB
125	4	7	15	6	8	15
250	4	7	18	6	8	20
500	4	11	23	7	15	29
1000	7	19	32	12	25	38
2000	14	25	38	20	32	45
4000	21	29	44	30	38	51
STC	8	16	28	12	19	31

In lab tests Johns Manville Ultra jacketing performed similarly to ASJ jacketing.

MICRO-LOK® *HP* ULTRA

HIGH-PERFORMANCE FIBERGLASS PIPE INSULATION

DATA SHEET

QUALIFICATIONS FOR USE

A sufficient thickness of insulation must be used to keep the maximum surface temperature of Micro-Lok *HP* Ultra below 150°F (66°C). In addition, at operating temperatures above 500°F (260°C), Micro-Lok *HP* Ultra pipe insulation must be applied in a thickness ranging from 2" (51 mm) minimum to 6" (152 mm) maximum.

During initial heat-up to operating temperatures above 350°F (177°C), an acrid odor and some smoke may be given off as the organic binders used in the fiberglass pipe insulation begin to decompose. When this occurs, caution should be exercised to ventilate the area well. This loss of binder does not directly affect the thermal performance of the pipe insulation, but the compressive strength and resiliency of the product are reduced. For applications with excessive physical abuse or vibration at high temperatures, consult your local Insulation Systems Market Development Manager for alternate material recommendations.

CHILLED WATER SYSTEMS

For chilled water systems, see 3-Part Specification, Mech-261.

APPLICATION RECOMMENDATIONS*

Micro-Lok *HP* Ultra Pipe Insulation and Butt Strips

1. Do not apply Micro-Lok *HP* Ultra if air temperature is below 20°F (-7°C) or above 130°F (54°C) due to the effect of temperature on tape performance. We recommend stapling when application falls outside this temperature range.

   When stapling, we recommend mastic be applied over staples to prevent moisture penetration.

2. If stored below 20°F (-7°C) or above 130°F (54°C), insulation cartons should stand within the recommended temperature range for 24 hours prior to application.

3. Once release paper is removed, both adhesive and lap must be kept free of dirt and water, and the lap sealed immediately.

4. When adhered, the lap and butt strips must be pressurized by rubbing firmly with a plastic squeegee or the back of a knife blade to ensure positive closure.

5. Do not reseal the lap or butt strip once applied. This could compromise the quality of the sealed jacket system.

**For complete application recommendations and installation instructions, see MECH-261 InsulSpec Specifications.*

Johns Manville
717 17th St.
Denver, CO 80202
800-654-3103
www.JM.com

North American Sales Offices, Insulation Systems

Eastern Region and Canada
P.O. Box 158
Defiance, OH 43512
800-334-2399
Fax: 419-784-7866

Western Region
P.O. Box 5108
Denver, CO 80217
800-368-4431
Fax: 303-978-4661

Technical specifications as shown in this literature are intended to be used as general guidelines only. Please refer to the Safety Data Sheet and product label prior to using this product. The physical and chemical properties of Micro-Lok *HP* Ultra listed herein represent typical, average values obtained in accordance with accepted test methods and are subject to normal manufacturing variations. They are supplied as a technical service and are subject to change without notice. Any references to numerical flame spread or smoke developed ratings are not intended to reflect hazards presented by these or any other materials under actual fire conditions. Check with your customer service representative for current information.

All Johns Manville products are sold subject to Johns Manville's standard Terms and Conditions, which includes a Limited Warranty and Limitation of Remedy. For a copy of the Johns Manville standard Terms and Conditions or for information on other Johns Manville thermal insulation and systems, visit www.jm.com/terms-conditions or call (800) 654-3103.

© 2022 Johns Manville. All Rights Reserved.

CHESAPEAKE CONTROLS INC
CREATING INTELLIGENT BUILDINGS

niagara4

SCI Mercer

Factory Provided controllers

Trane UC600

The use of Siemens/Tridium product. All devices are open protocol BacNet – MSTP & IP, block programming with embedded toolsets which are owner owned. Shown is the integration of factory provide controllers.

Daikin/McQuay MicroTech II

Aaon Orion

Comprehensive Building Automation Product Portfolio:

Operator Workstations (B-OWS)

FIN Framework

Desigo

niagara4

Primary System Controls (B-BC)

I/O Expansion Modules

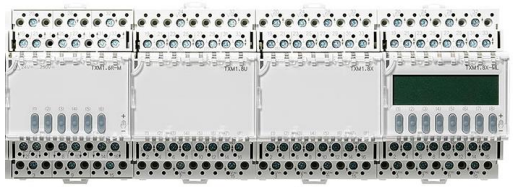

Zone & Room System Controls (B-AAC)

Local Plant & Room User Interface (B-OD)

System Tools

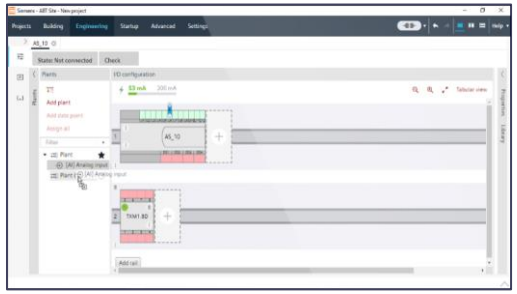

CHESAPEAKE CONTROLS INC
CREATING INTELLIGENT BUILDINGS

PXC Primary Automation

PXC7

For modular control of larger HVAC and centralized plants

PXC5

For system functions and integration

PXC4

For HVAC plant control (i.e., AHUs, boilers, chillers)

PXC Primary Automation Controllers

Model	PXC4.x16S	PXC4.x16	PXC5.E003	PXC7.E400S	PXC7.E400M	PXC7.E400L
Number of alarms	100	100	>500	>500	>500	>500
Number of trend blocks	40	40	200	200	400	600
Number of trend sample	20,000	20,000	100,000	100,000	200,000	300,000
Number of scheduler	5	5	20	20	40	60
Number of calendar	5	5	20	20	40	60
Number of BACnet objects	220	300	1,000	1,000	2,000	4,000
Supervisor (Life Check, Time Sync)	No	No	Yes	Yes	Yes	Yes
Time master RTC or NTP	Yes	Yes	Yes	Yes	Yes	Yes
BBMD (Broadcast Management Dev)	Yes	Yes	Yes	Yes	Yes	Yes
Web Interface (IP, WLAN, Cloud*)	Yes	Yes	Yes	Yes	Yes	Yes

Restricted | © Siemens 2022 | Building Products

TX-I/O Modules and Accessories

Universal Modules (UI/UO)

TXM1.8U:
8-point universal module

TXM1.8U-ML:
8-point universal module with LCD & HOA

Super Universal Modules (XI/XO)

TXM1.8X:
8-point super universal module

TXM1.8X-ML:
8-point super universal module with LCD & HOA

Digital Input Modules (DI)

TXM1.8D:
8-point DI module

TXM1.16D:
16-point DI module

Relay Modules (DO)

TXM1.6R:
6-point DO module w/ relay

TXM1.6R-M:
6-point DO module with relay & manual override

Digital Input & Relay (DI/DO)

TXM1.4D3R
4-point DI, 3-point DO module

Power Supply

TXS1.12F4:
24 VDC supply
1.2A, 4A fuse

Address Keys

- TXA1.K12: Two Sets of Address Key 1-12
- TXA1.K24: Address Key 1-24
- TXA1.K-48: Address Key 25-48
- TXA1.K-72: Address Key 49-72
- TXA.LLT-P100: 100 (sheets/pack) TX-I/O labels

DXR Controller Configurable Applications

	DXR2.E10PL	DXR2.E12P	DXR2.E18	DXR2.M10PL	DXR2.M11	DXR2.M12P	DXR2.M18
VAV	■	■		■		■	
VAV w/ FPB	■	■		■		■	
VAV Dual Duct	■	■		■		■	
CV	■	■		■		■	
Fan Coil Unit / Unit Vent			■		■		■
Heat Pump			■		■		■
Chilled Beam		■	■		■	■	■
Lights	■ **(PL-Link)**	■ **(PL-Link)**	■ **(PL-Link)**	■ **(PL-Link)**	■ **(PL-Link)**	■ **(PL-Link)**	■ **(PL-Link)**
Shades	■ **(PL-Link)**	■ **(PL-Link)**	■ **(PL-Link)**	■ **(PL-Link)**	■ **(PL-Link)**	■ **(PL-Link)**	■ **(PL-Link)**

CHESAPEAKE CONTROLS INC
CREATING INTELLIGENT BUILDINGS

Tridium block style programming is used in both Siemens Tridium Building Solution & Honeywell Tridium.

As shown here both products utilize worksheet - block Programming. Where all the programming tools reside on the JACE and SUPERVISOR Server or PC.

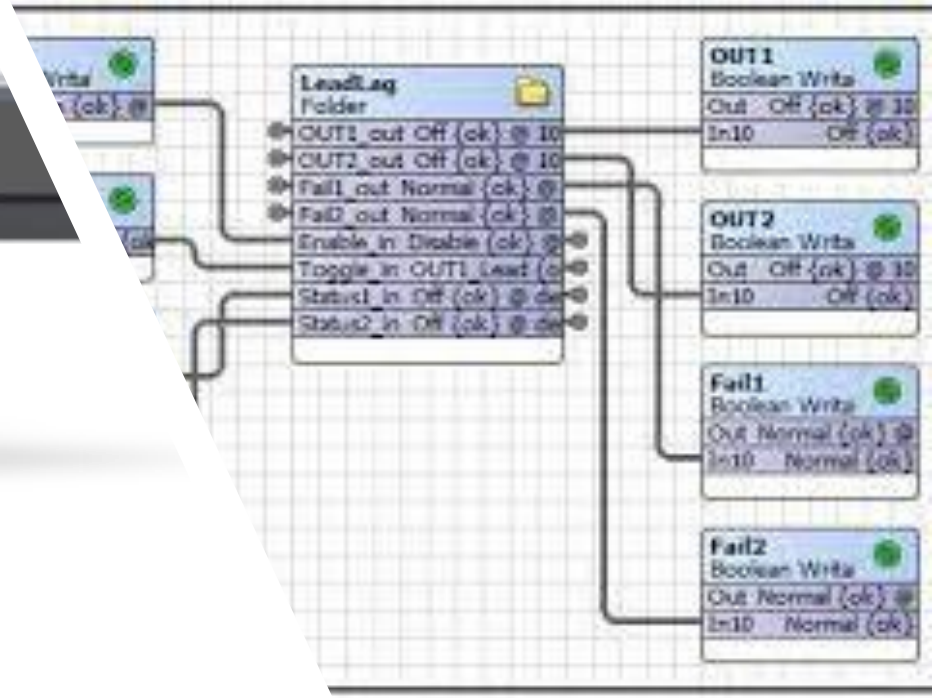

Workflow – Tridium Block Programming and Toolsets

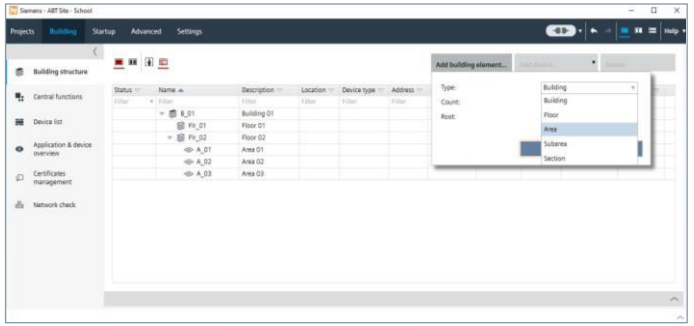

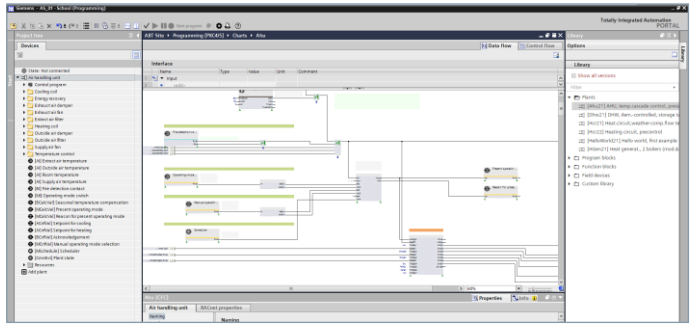

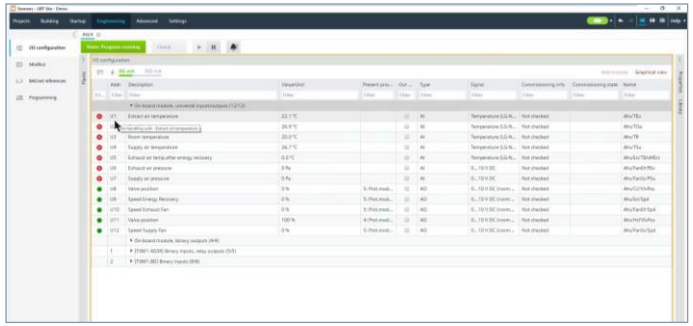

Setup project and data points

- Setup your project by creating the building structure and adding the devices
- Setup data points by adding and configuring I/Os and Modbus data points

Program and/or configure*

- Build your program with function blocks and proven application examples
- Configure devices

* Dependent on product type

Complete and download

- Download and commission the application
- Easily make changes when needed during commissioning and operation

ITEM NO. _____
PROJECT _____
LOCATION _____
DATE _____ QTY. _____

FINELINE™

Custom Walk-In Coolers & Freezers

Condensed Specifications For Architects & Consultants

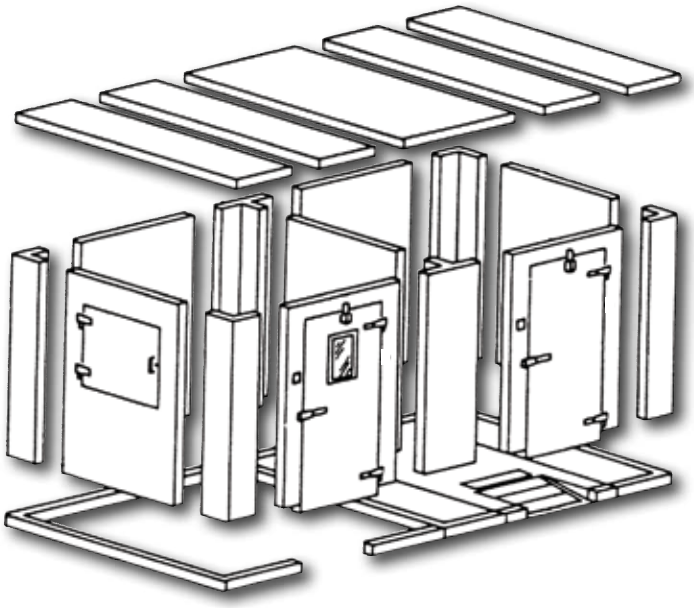

STANDARD FEATURES

- Coolers, freezers and combination cooler/freezers
- Modular panel construction for easy installation, expansion and relocation
- 26 gauge corrosion resistant stucco embossed coated steel
- .100 smooth aluminum interior floor (on models with floor)
- Floorless models provided with NSF approved vinyl sealers, foamed-in-place screeds or female bottom rails
- Full 4" or 5" thick panels foamed-in-place with HFO polyurethane insulation which is HFC free
- Zero ozone depletion
- Doors equipped with heavy duty polished chrome hardware
- Heavy duty, extruded, anodized aluminum load bearing door frame jamb
- Deadbolt locking handle with independent key/padlock feature and inside safety release
- High output low profile LED light positioned above the door to prevent interference with shelving or product
- Magnetic door gaskets and spring actuated door closer
- Heated pressure relief port on all freezers
- Indoor and outdoor roof and ceiling support systems
- Fifteen year panel warranty

OPTIONS & ACCESSORIES*

- ❑ Selection of interior and exterior surfaces and finishes
- ❑ Various door styles and sizes
- ❑ Wide range of computer sized and balanced refrigeration systems
- ❑ Indoor and outdoor roof and ceiling support systems
- ❑ Interior and exterior door kickplates
- ❑ Cooler and freezer door viewports
- ❑ Interior and exterior ramps
- ❑ Bumper rails, trim strips and closure panels
- ❑ Various security alarm systems
- ❑ Extra lights and special switches
- ❑ LED lighting
- ❑ Shelving (free-standing)
- ❑ Special floor underlayments and topside plating

APPROVALS

- NSF listed
- UL classified for flame spread
- UL electrical approved door section
- UL NCKL listed certifying compliant walk-ins are ignition protected
- City of Houston approved
- Oregon State approved
- State of Wisconsin Building Product approved
- USDA accepted
- Miami-Dade County, Florida Approval No. 19-0911.03, Exp. 05/10/2023 (Consult factory for requirements)
- State of Florida Product Approval File No. FL28473-R1 (Consult factory for requirements)

* Most options are available two weeks from receipt of order. Please contact us for specific questions.

891 County Road U • Hudson, WI 54016 • 800-955-5253 • norlake.com

SPECIFICATIONS

1.0 GENERAL:

1.1 Walk-in coolers and freezers to consist of precision constructed modular 4" or 5" thick rigid polyurethane foamed-in-place interchangeable panels. Panels are designed for easy installation, expansion and relocation.

1.2 Panels shall be prefabricated modular construction consisting of 100% foamed-in-place polyurethane insulation, bonded by an adhesive to the interior and the exterior metal pan skins and heat cured for life long stability.

1.3 Each wall panel skin is to be formed using a double 90° bend on each edge to add strength and rigidity. Panels are to be in 6 inch increments, with a minimum width of 12 inches.

1.4 All panels are to bear the UL and NSF label. The panels shall incorporate cam lock type fasteners with reverse wing structural support as joining devices for the adjacent tongue and groove panels. Each device is to consist of a cam action locking arm and a steel rod in adjoining panel so that by rotating the locking arm, the hook engages over the rod and the cam action draws the panel together. The resulting panel joints shall be sealed by a foamed-in-place, continuous one piece gasket.

1.5 Panel joints are to be precisely formed male and female tongue and groove shapes fabricated to force the male edge to contact the female edge, providing additional seal. The panel joint shall have a gasket which provides a positive seal that meets NSF standards. Gasket shall be “locked” to the skins and run in a continuous piece, completely around the panel with only one break to provide the optimal seal.

2.0 INSULATION

2.1 Insulation shall be a full 4 inches or 5 inches thick, UL Class 1 rigid foamed-in-place HFO polyurethane with a minimum 2.15 lbs/cubic foot density. Foam polyurethane shall be injected into the panels by means of a high output, high impingement mixer.

2.2 The R-values for 4" HFO panels are:

Cooler:	
Walls/Ceilings	R-value 25
Doors	R-value 25
Freezer:	
Walls/Ceilings	R-value 32
Doors	R-value 32
Floors	R-value 28

2.3 Insulation shall be 90% closed cell structure. Flame spread rating of the foam core according to ASTM E-84/UL 723 shall be 25 or less.

2.4 The use of an HFC as a blowing agent is specifically prohibited.

3.0 FLOOR STYLES:

3.1 Less floor 4" wall walk-ins shall be supplied with PVC extruded floor sealers with semi-flexible edges, which seal to floor without the use of exposed fasteners. Sealer shall encase the wall panel on both interior and exterior surfaces with a flexible rubber collar a minimum of 3" high from finished building floor. Sealer shall meet NSF requirements for floor cove molding. Additional less floor options include female bottom rail walls for 4" and 5" thick walk-ins and various height foam sealers for 4" thick walk-ins. Consult factory for detailed specifications.

3.2 With floor walk-ins shall be a full 4 inches thick with one piece foamed-in-place edge caps. Edge caps include metal formed adhesion edges which result in the edge caps being a foamed integrated member of the floor panels. Glued-in-place edge caps are not acceptable. Floor panels shall be designed to withstand uniformly distributed loads of 800 pounds per square foot. The joint between the floor and wall shall form a NSF approved 45° angle to allow for easy cleaning.

4.0 CEILING PANELS:

4.1 Ceiling panels shall be a full 4 inches or 5 inches thick with one piece foamed-in-place edge caps. Edge caps include metal formed adhesion edges which result in the edge caps being a foamed integrated member of the ceiling panels. Glued-in-place edge caps are not acceptable.

4.2 Metal face skins are to incorporate seams using a double 90° bend at a maximum width of two feet for additional strength. The joint between the ceiling and wall shall form a 45° angle to allow for easy cleaning.

5.0 FINISHES:

5.1 The interior and exterior walls and interior ceiling shall be supplied with 26 gauge corrosion resistant stucco embossed coated steel. The interior floor surface (when applicable) shall be .100 smooth aluminum. Other finisheds are available.

6.0 DOOR CONSTRUCTION:

6.1 Entrance door shall be in fitting, flush design. The door section shall provide a full 4 inches or 5 inches of polyurethane HFO insulation, construction and finish shall be the same as the adjoining wall panels.

6.2 The door shall be 4 inches thick, constructed to incorporate heavy duty, molded ABS breaker strip, which is permanently foamed-in-place. Bottom of door shall seal with double sweep gaskets, uniquely designed to provide complete seal between door, threshold, and door jamb.

6.3 Door jamb to be a fully coved, extruded, welded, structural anodized aluminum, rigid frame design for easy cleaning and maintenance.

6.4 Threshold plate provided shall be constructed of fiberglass reinforced plastic (FRP) or extruded aluminum for bearing strength. All doors shall have an anti-sweat heater wire around the entire perimeter of the door opening and under threshold.

6.5 The heater wire (standard in both coolers and freezers) shall provide enough heat to prevent condensation. All conduit for the inner-wiring of the door panel shall be totally concealed in the polyurethane foam panel, exposed conduit is not acceptable.

6.6 Door section to be field wired to surface mounted junction box on the interior door panel. The door size, location and swing to be as indicated in Specifications Drawings.

6.7 Door hardware shall be highly polished chromium plated steel. Hardware shall include a spring actuated door closer, field adjustable cam lift hinges, one spring hinge & deadbolt locking handle with independent key/padlock feature and inside safety release. All hardware shall be attached to extra large 1/2 inch thick, nonconducting synthetic tapping plates.

6.8 Digital thermometer calibrated to indicate interior walk-in temperature shall be provided with each entrance door.

6.9 High output low profile LED light with approximately twice the light output of a standard 60W incandescent or 13-15W CFL, guaranteed for 5 years or 35,000 hours. Light is positioned above the door to prevent interference with shelving or product. Locate light switch with pilot light adjacent to door, on exterior handle side of door section, with all inner wiring in conduit concealed inside the door section and terminated at a surface mounted junction box on the interior door frame. Fixture shall operate on 120 VAC.

7.0 INSTALLATION AND MAINTENANCE:

7.1 Included with each walk-in shipment is a complete set of installation instructions covering all phases of panel erection, accessories, and maintenance procedures.

8.0 APPROVALS:

8.1 Walk-in construction is approved by NSF International and shall have the NSF seal on the door section.

8.2 Walk-in panels shall have foam cores with a UL flame spread rating of 25.

8.3 The door section shall be UL approved as an electrically approved assembly.

8.4 City of Houston approved, Oregon State approved, State of Wisconsin Building Product approved, USDA accepted.

8.5 UL NCKL listed certifying compliant walk-ins are ignition protected.

9.0 WARRANTIES:

9.1 Manufacturer shall provide a written warranty to the owner stating the product is free from defects or workmanship under normal use and service. Warranty shall become effective following the acceptance date and cover the insulated panels for a period of fifteen years and parts for a period of 18 months.

10.0 QUALITY ASSURANCE:

10.1 To insure the finest quality in material and workmanship the above specifications shall be held in full compliance. Please specify the walk-in cooler or freezer is to be as manufactured by Norlake, Incorporated.

11.0 SITE CONDITIONS:

11.1: To assure proper operation, site conditions should be controlled. The walk-in product should be in a well ventilated location. Indoor ambient conditions should be controlled, relative humidity between 30%-60% and maintaining a dew point of 50°F (or less).

Dedicated medium temp condensing units meet the DOE requirement of a minimum AWEF rating of 5.61 (Btu/W-h) for indoor models and 7.6 for outdoor models.

NOTE: All specifications within this publication subject to change without notice.

©2022 Norlake, Inc. All rights reserved.

Appendix 6:
Inflation Reduction Act & Rebates

(included w/ Electronic Copy only)

Inflation Reduction Act

The Inflation Reduction Act of 2022 provides $369 billion investment to addressing climate change, out of which $270 billion will be delivered through tax incentives. Multiple credits will be offered to clean energy production and energy conservation projects. The benefits of the Inflation Reduction Act (IRA) includes a Base Credit of 6% and a series of potential adders. The combination of those Base Credits and Adders is noted below. For each project the IRA could provide a total credit anywhere from 6% to 70% for solar and small wind or 50% for all other applicable technologies.

A combination of the Base Credit and the "5x" Bonus for Prevailing Wages, ESG is targeting 30% for those credits. Based on the maps below, SCI Mercer should qualify for the Energy Community Bonus but not the Low-Income Bonus. ESG will work with our suppliers to determine eligibility for the Domestic Adder. Based on the above analysis the Investment Tax Credit for the solar and Geothermal options will be in the 40% range, possibly 50% based on the domestic adder. The IRA includes a 15% reduction in credit if the entity uses Tax-Exempt Bonds as part of the financing. If that is the chosen financing method any credit would be reduced accordingly.

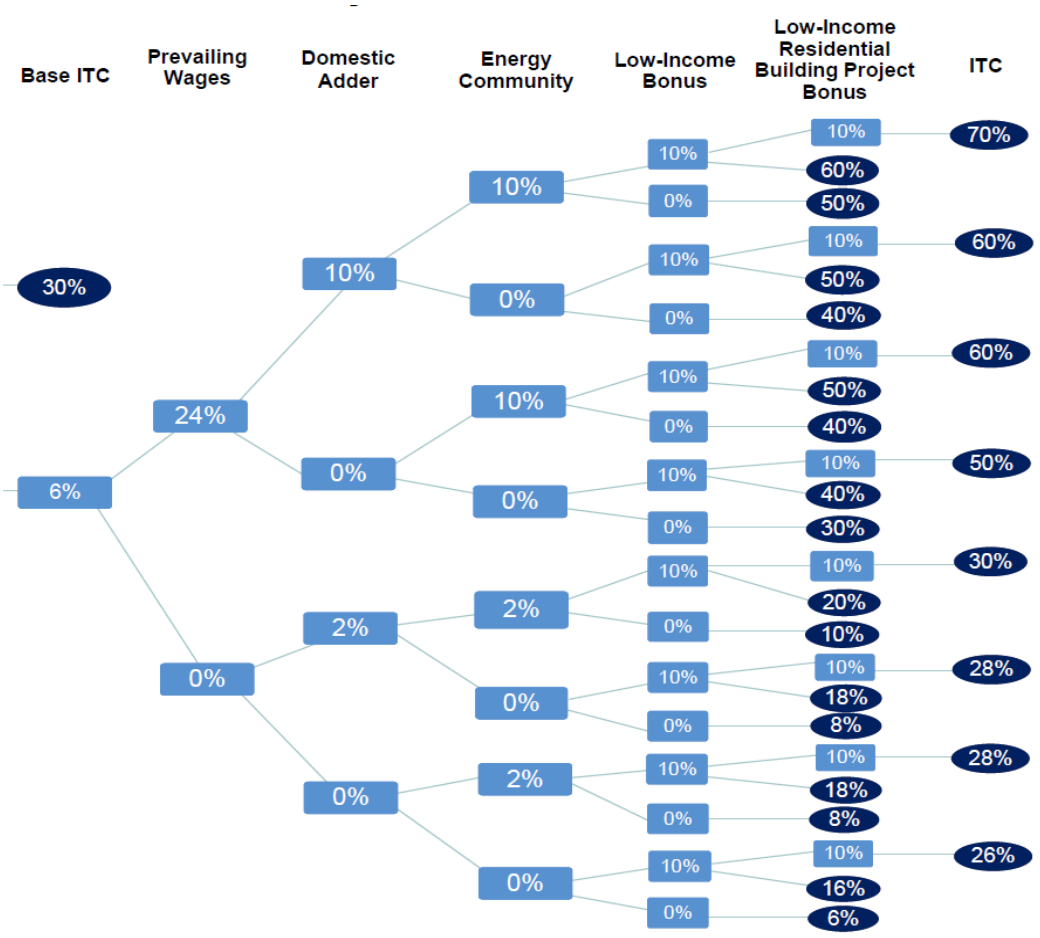

Technology	Base Credit	5x Bonus	Made in USA	Energy Community	Low Income	Range
Solar Technologies	6%	30%	2%/10%	2%/10%	10%/20%	6%-70%
Ground Source Heat Pump	6%	30%	2%/10%	2%/10%	0%	6%-50%
Microturbine	2%	10%	2%/10%	2%/10%	0%	2%-30%
CHP	6%	30%	2%/10%	2%/10%	0%	6%-50%
Microgrid Controller	6%	30%	2%/10%	2%/10%	0%	6%-50%
Standalone Energy StorageSystems	6%	30%	2%/10%	2%/10%	0%	6%-50%
Thermal Energy Storage Systems	6%	30%	2%/10%	2%/10%	0%	6%-50%

Energy Communities Map

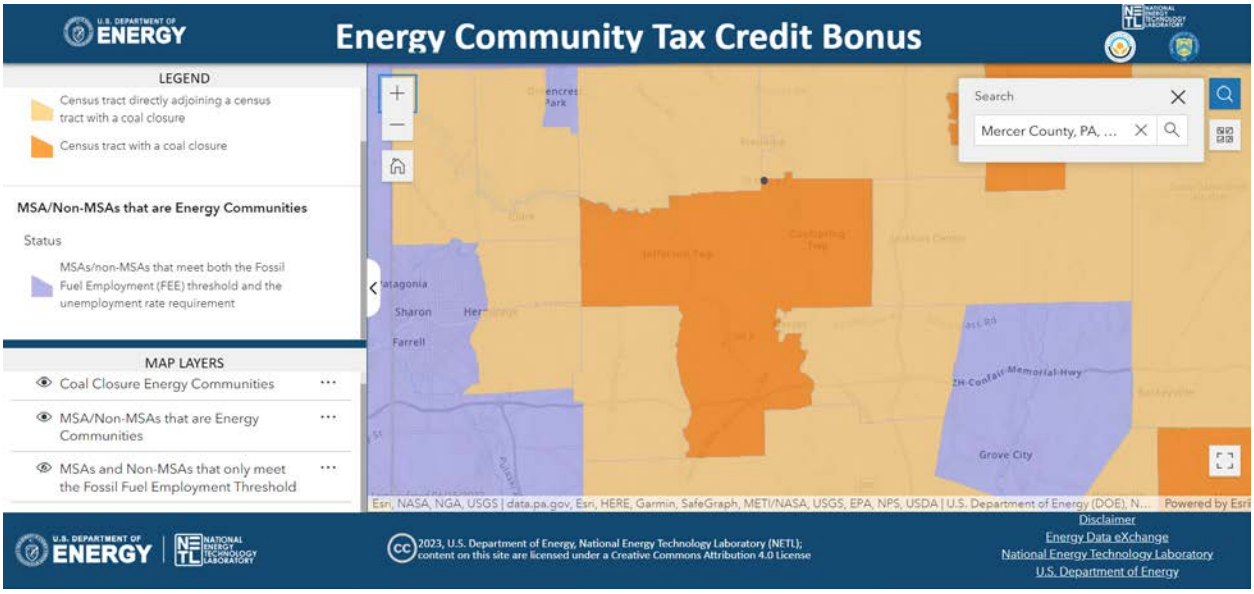

Low Income Communities Map

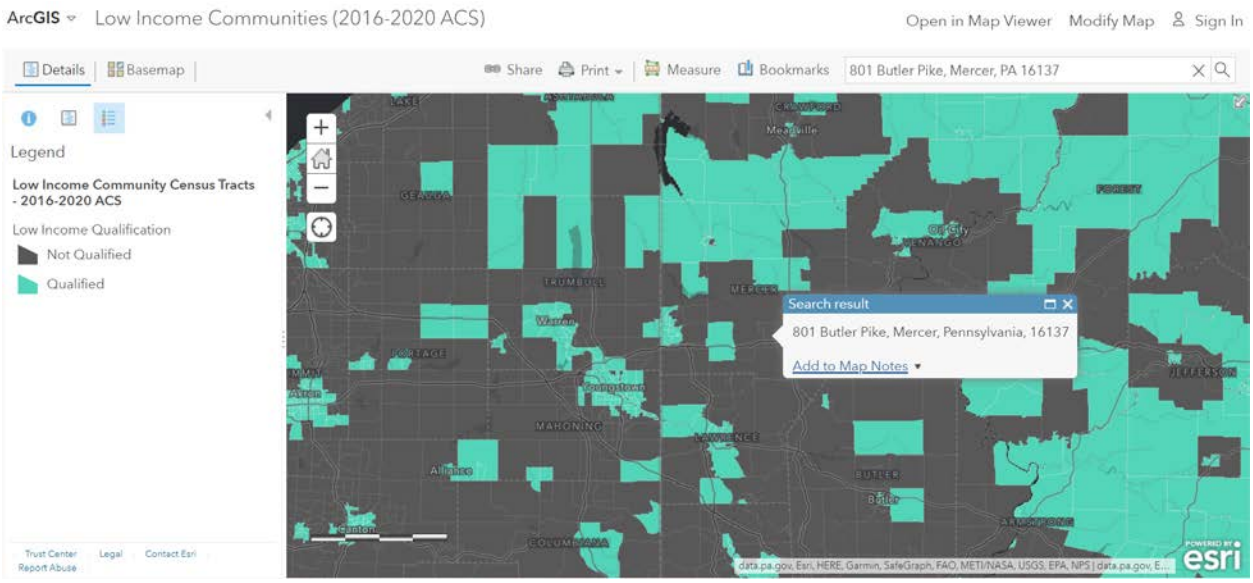

FirstEnergy PA Utilities
Building Tune-up
Program Ally Overview

Program Basics

Building Tune-up (BT) offers incentives to offset the upfront costs for energy efficiency improvements in existing commercial buildings through HVAC, refrigeration, lighting, and food service measures. In addition to reducing operational inefficiencies, these measures also provide non-energy benefits such as improved comfort, enhanced air quality, and reduced occupant complaints.

- **Building Tune-Up projects must be pre-approved.**
- **New Construction and major renovation projects are not eligible under this program but may be eligible under the Commercial New Construction and Commercial Building Improvement Assistance Programs.**
- **Program will accept singular end use measure category projects.**

Incentive Structure

Incentives are determined per Energy Conservation Measure category: Lighting, HVAC, and Refrigeration. **Measures in each category are incentivized at the specified $/kWh based on calculated energy savings. Each measure is also capped at a maximum percentage of total measure cost based on its category.** *For example, HVAC measures are incentivized at $1.85 per kWh saved but limited to 80% of the measure's total cost.*

Incentives are designed to encourage a comprehensive review and implementation of as many eligible improvements as possible. Therefore, lighting measures will be incentivized at the highest rate when paired with other measure categories.

Energy Conservation Measure Category	Incentive cannot exceed __% of measure cost*	Incentive
HVAC	80%	$1.85 per kWh
Refrigeration	80%	$0.80 per kWh
Food Service	80%	$0.80 per kWh
HVAC Tune-Up:		
- Combined with other measures	80%	$0.80 per kWh
- As the sole measure implemented	N/A	$175 single/ $250 multi-compressor
Lighting: *measures are incentivized on a sliding scale based on the % of overall kWh savings from lighting*		
- < = 75% of savings from lighting	80%	$0.35 per kWh
- 75% - 85% of savings from lighting	60%	$0.30 per kWh
- > = 85% of savings from lighting	50%	$0.25 per kWh
**Measure cost is all-in cost including equipment, installation, administration, etc.*		

Project Incentive Caps: The incentive caps per project is as follows:

- **SCI Customers (<400KW): $75,000 per project**
- **LCI Customers (>400KW): $125,000 per project**

Available Measures by End Use Category

The following measures are currently available. If you find that a successful measure is not listed, please inform program staff. Measures already within the Pennsylvania TRM can be added; others must get additional approval.

Measure	End Use Category
HVAC System Replacements:	HVAC
Air Source Air Conditioners	HVAC
Air Source Heat Pumps	HVAC
Ductless Mini-Split Heat Pump (DMSHP)	HVAC
Packaged Terminal Air Conditioner	HVAC
Packaged Terminal Heat Pump	HVAC
Water Cooled Air Conditioners	HVAC
Advanced Rooftop Controls – Demand Control Ventilation	HVAC
Duct Sealing & Insulation	HVAC
Economizer (Dual/Differential Enthalpy)	HVAC
Guest Room Occupancy Sensor	HVAC
Heat Pump Hot Water Heaters	HVAC
Premium Efficiency Motors	HVAC
Small C&I HVAC Refrigeration Charge Correction	HVAC
Smart Thermostats (Energy Star Certified, Connected)	HVAC
Switch Reluctance Motor (approval required)	HVAC
Variable Frequency Drive (VFD) Improvements	HVAC
VSD Air Compressor (<=40hp, retrofit or new install)	HVAC
VSD on Kitchen Exhaust Fan	HVAC
HVAC Tune-up	HVAC Tune-up
Lighting Improvements	Lighting
Lighting Controls	Lighting
LED Exit Signs	Lighting
LED Refrigeration Display Case Lighting	Lighting
Anti-Condensation Door Heater Controls	Refrigeration
Controls: Evaporator Fan Controller	Refrigeration
Door Closures	Refrigeration
EC Motors Retrofits	Refrigeration
Evaporator Coil Defrost Controls	Refrigeration
Floating Head Pressure Controls	Refrigeration
Gaskets	Refrigeration
Insulate Bare Suction Pipes – Cooler	Refrigeration
Night Covers	Refrigeration
Refrigerated Display Case Door Installation	Refrigeration
Strip Curtains	Refrigeration
Variable Speed Refrigeration Compressor	Refrigeration
Controls: Beverage Machine Controls	Food Service
Controls: Snack Machine Controls	Food Service

Measure Details

Lighting Measures

- **Limitations**
  - The ratio of kWh/KW savings must not exceed the following:
    - **SCI Customers (<400KW): 8700 hours**
    - **LCI Customers (>400KW): 4600 hours**
- **Lighting & Lighting Controls:**
  - Lighting measures should prioritize internal lighting systems. Outdoor lighting is allowed, but a substantial proportion of outdoor lighting may push the project kWh/KW ratio above the caps listed above. See program staff with questions.
  - Lighting Measures must be on the current Design Light Consortium (N), prior DLC listing (N-1)((https://www.designlights.org/qpl/), or ENERGY STAR rated (www.energystar.gov) to be eligible for participation
  - Lighting Controls
    - Occupancy controls may not have a manual "on" switch capable of overriding the automatic "off" switch.
    - New controls must replace a manual switched system.

  - ***Customers with annual average demand <= 80 kW:***
    - Lighting Upgrades are encouraged to include lighting controls and/or optimization schemes implemented as part of the project.
  - ***Customers with annual average demand > 80 kW:***
    - Lighting Upgrades shall include lighting controls and/or optimization schemes implemented as part of the project.
  - **Eligible Control Strategies may include, but not limited to**
    - Occupancy Sensing
    - Vacancy Sensing
    - Networked Controls
    - Dimming
    - Daylighting / Daylight Harvesting / Daylighting Controls
    - High-End Trim (incl. High-End Trimming, Lumen Maintenance)
    - Time Scheduling or Modification Controls Logic/Scheduling
    - Task Tuning
    - Multiple Tuning Types

HVAC Tune Up

- Air conditioners or heat pumps up to 20 tons nameplate capacity (Applications over 20 tons acceptable only after FirstEnergy review and approval)
- **Program incentives up to $175 and $250 for a single and multi-compressor HVAC system, respectively.**
- Savings will be deemed based on the savings table below.
- HVAC Tune-Up may include:

Tune-Up Component	Savings Factor
Condenser Cleaning	6.1%
Evaporator Cleaning	0.22%
Refrigerant Charge Correction (<=20% of refrigerant capacity)	0.68%
Refrigerant Charge Correction (>20% of refrigerant capacity)	8.44%
Combo: Condenser Cleaning, Evaporator Cleaning, Charge Correction (<=20%)	7.0%
Combo: Condenser Cleaning, Evaporator Cleaning, Charge Correction (>20%)	14.76%

- Eligible for a tune-up once during five (5) program timeline
- **Applications must include:**
    - Accurate listing of quantity, size, compressor(s), and efficiency of each unit type serviced
    - Component cleaning scope (see above)
    - Pictures showing that condenser/evaporator coil cleaning was performed
- Efficient Condition: Condenser coil cleaning is mandatory.

HVAC System Minimum & Baseline Efficiencies

The following are effective June 2023-May 2026.

Minimum efficiency requirements of HVAC equipment are set by federal regulation. A replacement system must meet all federal or local regulations and exceed the efficiency rating of the system being replaced. For the purposes of this program, HVAC systems have a measure life of 15 years.

To calculate incentives, early replacement projects will compare the replacement system to the existing system. Replace on Burnout projects (due either to system failure or an existing system life exceeding 15 years) will compare the replacement system to the applicable baseline efficiency below as determined by the Pennsylvania TRM.[1]

Air Source Air Conditioners and Heat Pumps

	Cooling Capacity		**Minimum Efficiency Requirements**		
	Btu/h	*Tons*	*IEER*	*EER*	*HSPF/COP*
AIR-SOURCE AIR CONDITIONERS ONLY *(Subtract 0.2 from IEER/EER for units with heating other than Electric-Resistance)*					
Split System	<65,000	<5.4	13 SEER	N/A	N/A
Single Package	<65,000	<5.4	14 SEER	N/A	N/A
Split System or Single Package	≥65,000 and <135,000	≥5.4 and <11.25	14.8	11.7	N/A
Split System or Single Package	≥135,000 and <240,000	≥11.25 and <20	14.2	11.4	N/A
Split System or Single Package	≥240,000 and <760,000	≥20 and <63.3	13.2	10.4	N/A
Split System or Single Package	≥760,000	≥63.3	11.2	9.7	N/A
AIR SOURCE HEAT PUMPS *(Subtract 0.2 from IEER/EER for units with heating other than Electric-Resistance)*					
Split System	<65,000	<5.4	14 SEER	N/A	8.2 HSPF
Single Package	<65,000	<5.4	14 SEER	N/A	8.0 HSPF
Split System or Single Package	≥65,000 and <135,000	≥5.4 and <11.25	14.1	12	3.4 COP
Split System or Single Package	≥135,000 and <240,000	≥11.25 and <20	13.5	10.7	3.3 COP
Split System or Single Package	≥240,000 and <760,000	≥20	12.5	9.9	3.2 COP
Split System or Single Package	≥760,000	≥63.3	12.5	9.5	3.2 COP

[1] Pennsylvania Technical Reference Manual. Volume 3: Commercial & Industrial Measures. Section 3.2.1 HVAC Systems Table 3-26. Gas baseline efficiencies adjusted by -0.2 per ADM.

Water Cooled Air Conditioners

	Cooling Capacity		Minimum Efficiency Requirements		
	Btu/h	*Tons*	*SEER/IEER*	*EER*	*HSPF/COP*
WATER COOLED AIR CONDITIONERS *(Subtract 0.2 from IEER/EER for units with Gas Heat)*					
Split System or Single Package	<65,000	<5.4	12.3[2]	12.1[3]	N/A
Split System or Single Package	≥65,000 and <135,000	≥5.4 and <11.25	13.9	12.1	N/A
Split System or Single Package	≥135,000 and <240,000	≥11.25 and <20	13.9	12.5	N/A
Split System or Single Package	≥240,000 and <760,000	≥20 and <63.3	13.6	12.4	N/A
Split System or Single Package	≥760,000	≥63.3	13.5	12.2	N/A

Packaged Terminal Air Conditioner and Heat Pump

	Cooling Capacity		Minimum Efficiency Requirements	
	Btu/h	*Tons*	*EER*	*COP*
Replacements *(Provided as a range – larger units have lower minimum)*				
PTAC	All	All	7.3-9.8	N/A
PTHP	All	All	7.2-9.7	2.5-2.9

Ductless Mini-Split Air Heat Pump (DMSHP)

	Cooling Capacity		Minimum Efficiency Requirements		
	Btu/h	**Tons**	*SEER/IEER*	*EER*	*HSPF/COP*
DUCTLESS, MINI-SPLIT AIR CONDITIONERS AND HEAT PUMPS					
Replacement/Upgrade	all	all	14 SEER	12.17	8.2/3.412 HSPF[4]
New Space/No Cooling	all	all	11.3 SEER	9.82	8.2/3.412 HSPF[5]

[2] No change for units with gas heat
[3] No change for units with gas heat
[4] 8.2 HSPF for heat pumps; 3.412 for electric resistance
[5] 8.2 HSPF for heat pumps; 3.412 for electric resistance