APPENDIX C

Quote Security (Bid Bond)

INSTRUCTIONS ON BID BOND

1. If a bid bond is used as Quote security, the Bid Bond MUST be submitted on the following GSBPSAS-147 (2009 Ed) form. If the principal is a corporation, the President or Vice President and the Secretary or Treasurer of the corporation must sign; if a partnership, the partners must sign; if a joint venture, the joint venture must sign.

2. The Surety must sign the Bid Bond.

3. The Surety MUST attach to the Bid Bond a Power-of-Attorney, which must be dated the same date as the Bid Bond, showing that the person signing the Bid Bond for the Surety has authority to do so.

4. All signatures by the Surety of the Bid Bond MUST be original and hand-scripted. Faxed or copied signatures are unacceptable.

COMMONWEALTH OF PENNSYLVANIA
DEPARTMENT OF GENERAL SERVICES
GSBPSAS-147 (2009 Ed.) Bond No. N/A - BID BOND

CONSTRUCTION BID BOND
(Please Complete All Blanks)

KNOW ALL MEN BY PRESENTS, that we, The Efficiency Network, Inc. (TEN) (hereinafter called the "Principal") as Principal and Great American Insurance Company a corporation duly organized under the laws of the State of Ohio (hereinafter called the "Surety") as Surety, are held and firmly bound unto The Department of General Services, Harrisburg, Pennsylvania (hereinafter called the "Obligee"), in the sum of Ten (10%) Percent of the ECM/Cost Submittal Amount for the payment of which sum, well and truly to be made, we, the said Principal, and the said Surety, bind ourselves, our heirs, our administrators, successors, and assigns, jointly and severally firmly by these presents.

Sealed with our seals and dated this 19 day of November A.D.

Two Thousand and Eighteen.

WHEREAS the Principal has submitted a bid upon Contract
No. GESA 2018-1
For SCI Houtzdale
Clearfield County, PA

NOW, THEREFORE, the conditions of these obligations are such that if the Principal shall not withdraw its bid prior to the expiration of the award period after the opening of the bids; and shall comply with all requirements set forth in the "Quote" and the "Instructions to Bidders;" and if the said contract be awarded to the Principal and the Principal shall, within such time as may be specified, enter into the contract in writing, and give bond, with Surety acceptable to the Obligee, covering the faithful performance of the said contract and payment of claims for labor, material, and equipment rental, all of which shall be supplied on the forms as specified by said Obligee; or if the Principal shall fail to do so, pay to the Obligee the lesser of the following amounts: 1) the amount of this bond as herein above set forth, or 2) the difference between the amount specified in the Principal's bid and such larger amount for which the Obligee may in good faith contract with another party to perform the work covered by said bid, then this obligation shall be void; otherwise to remain in full force and effect.

WITNESS (OR ATTEST IF A CORPORATION) **PRINCIPAL**

ROBERT G. CAMPBELL, PRESIDENT

(CORPORATE SEAL) **SURETY**

Karen Bachy, Attorney-in-Fact
Great American Insurance Company, SURETY

THE EFFICIENCY NETWORK, INC. CORPORATE SEAL 2012 DELAWARE

GREAT AMERICAN INSURANCE COMPANY®

Administrative Office: 301 E 4TH STREET • CINCINNATI, OHIO 45202 • 513-369-5000 • FAX 513-723-2740

The number of persons authorized by this power of attorney is not more than FOUR

No. 0 20954

POWER OF ATTORNEY

KNOW ALL MEN BY THESE PRESENTS: That the GREAT AMERICAN INSURANCE COMPANY, a corporation organized and existing under and by virtue of the laws of the State of Ohio, does hereby nominate, constitute and appoint the person or persons named below, each individually if more than one is named, its true and lawful attorney-in-fact, for it and in its name, place and stead to execute on behalf of the said Company, as surety, any and all bonds, undertakings and contracts of suretyship, or other written obligations in the nature thereof; provided that the liability of the said Company on any such bond, undertaking or contract of suretyship executed under this authority shall not exceed the limit stated below.

Name	Address	Limit of Power
ZACHARY L. MENDELSON KAREN BACHY KATHRYN J. FINDLAY JANICE S. ZEWE	ALL OF PITTSBURGH, PENNSYLVANIA	ALL $100,000,000

This Power of Attorney revokes all previous powers issued on behalf of the attorney(s)-in-fact named above.

IN WITNESS WHEREOF the GREAT AMERICAN INSURANCE COMPANY has caused these presents to be signed and attested by its appropriate officers and its corporate seal hereunto affixed this 23RD day of OCTOBER , 2017 .

Attest

GREAT AMERICAN INSURANCE COMPANY

Assistant Secretary

Divisional Senior Vice President

DAVID C. KITCHIN (877-377-2405)

STATE OF OHIO, COUNTY OF HAMILTON - ss:

On this 23RD day of OCTOBER , 2017 , before me personally appeared DAVID C. KITCHIN, to me known, being duly sworn, deposes and says that he resides in Cincinnati, Ohio, that he is a Divisional Senior Vice President of the Bond Division of Great American Insurance Company, the Company described in and which executed the above instrument; that he knows the seal of the said Company; that the seal affixed to the said instrument is such corporate seal; that it was so affixed by authority of his office under the By-Laws of said Company, and that he signed his name thereto by like authority.

Susan A. Kohorst
Notary Public, State of Ohio
My Commission Expires 05-18-2020

This Power of Attorney is granted by authority of the following resolutions adopted by the Board of Directors of Great American Insurance Company by unanimous written consent dated June 9, 2008.

RESOLVED: That the Divisional President, the several Divisional Senior Vice Presidents, Divisional Vice Presidents and Divisonal Assistant Vice Presidents, or any one of them, be and hereby is authorized, from time to time, to appoint one or more Attorneys-in-Fact to execute on behalf of the Company, as surety, any and all bonds, undertakings and contracts of suretyship, or other written obligations in the nature thereof; to prescribe their respective duties and the respective limits of their authority; and to revoke any such appointment at any time.

RESOLVED FURTHER: That the Company seal and the signature of any of the aforesaid officers and any Secretary or Assistant Secretary of the Company may be affixed by facsimile to any power of attorney or certificate of either given for the execution of any bond, undertaking, contract of suretyship, or other written obligation in the nature thereof, such signature and seal when so used being hereby adopted by the Company as the original signature of such officer and the original seal of the Company, to be valid and binding upon the Company with the same force and effect as though manually affixed.

CERTIFICATION

I, STEPHEN C. BERAHA, Assistant Secretary of Great American Insurance Company, do hereby certify that the foregoing Power of Attorney and the Resolutions of the Board of Directors of June 9, 2008 have not been revoked and are now in full force and effect.

Signed and sealed this 19 day of November , 2018.

Assistant Secretary

TEN
THE EFFICIENCY NETWORK

Response to Request for Quotes for a Guaranteed Energy Savings Project

SCI Houtzdale, Clearfield County, PA
Project No. GESA 2018-1
Contract No. GESA 2018-1.1
Volume II -ECM/Cost Submission

Commonwealth of Pennsylvania
Department of General Services (DGS)

November 20, 2018
2:00 p.m.

Submitted by:
The Efficiency Network (TEN)
1501 Reedsdale Street, Suite 401
Pittsburgh, PA 15233

Mr. David Robb
Vice President, Project Development
412-7229845
david.robb@tensaves.com

Contents

Energy Conservation Measures/Cost Submission (2.6) 1
ECM #1 LED Lighting Upgrade 7
ECM #2 Lighting Controls 9
ECM #3 Central Heating Plant Upgrades: 10
ECM #3a. Compressed Natural Gas Conversion 10
ECM 3b Hot Water Boiler Conversion, New Steam Plant Inside Fence 11
ECM #4 Replace Existing Buried Hot Water and Chilled Water Piping 15
ECM #5 Water Conservation 17
ECM 6 Central Chilled Water Plant Upgrades 19
ECM #7 Building Automation System Upgrade 22
ECM #8 Roof Replacement/Insulation 25
ECM #9 Solar Panel Array 26
Monitoring and Maintenance 27
Proposed Measurement and Verification Plan 29

Potential Additional ECMs for Consideration
Duct Cleaning
Demand Control Ventilation
ECM Kitchen Hood Controls

Energy Conservation Measures/Cost Submission (2.6)

TEN is pleased to submit the following Energy Conservation Measures (ECMs) for DOC consideration. This proposal was developed under the parameters identified in the RFQ inclusive of bulletins 1-8 received by TEN. The proposed project is self-funding with excess positive cash flow through guaranteed savings within 18 years (inclusive of construction).

Key features of the proposal include:

- Base Recommended Project includes all core Energy Conservation Measure (ECM) scopes, except ECM 4 – Replace HW & CHW Piping, ECM 8 – Roof Replacement and, ECM 9 – Solar Panel Array. As evidenced by their full economic analysis, the payback and magnitude of ECMs 4, 8 and 9 were too long/high to fit within either a fully self-funding project or one supported by substantial avoided capital expense.

- LED Lighting Upgrades will improve light levels, energy efficiency and reduce maintenance costs.
  - If allowed, the lighting ECM cost includes funds to potentially hire (2) additional corrections officers for escorts to help expedite the installation of either lighting or water conservation ECMs to help realize savings earlier during the construction period. It's anticipated that CO's who may be recently retired and already trained to work within SCI Houtzdale could potentially fulfil these needs.
  - Areas of focus include new LED high bay fixtures meeting NSF for food processing requirements will be installed in the three inmate dining halls and the staff dining hall as well as new LED high bay luminaires in the gymnasium, central plant and auto shop with diecast aluminum construction and tempered glass lens which are extremely durable and impact resistant and ideal for an athletic facility (as well as construction areas).

- Compressed natural gas (CNG) conversion for the site that includes HW conversion of the existing 800HP Clever Brooks boiler and installation of a new 700 HP HW boiler to provide N+1 HW capacity in the central plant. This ECM also includes upgrade of the HW piping in the central plant and removal of existing coal equipment. Two (2) new 250 HP steam boilers will be installed in building 5 to address the remaining steam load. The chillers will also be replaced.

- Significant savings will be generated through water conservation and the use of ICON plumbing controls which include a lockout on celled toilets. A key component of the base solution is replacement of 310 existing stainless steel (SS) combination fixtures with new ICON low consumption SS fixtures and an option to replace the existing 780 porcelain with stainless steel through the project's application of avoided capital expense savings.

- The potential to apply capital cost avoidance to the project will enable DOC to expand the scope significantly, however we believe it prudent to initially recommend a self-funding base project that does not require capital cost avoidance. The base project cash flow generates excess savings which will support at least $1.5 million of additional scope in today's dollars. Additional ECM's can be chosen from the tables on the following pages or spread among portions of the remaining core ECM scopes to address the most needed improvements in the facility.

Investment Grade Audit

TEN will continue its RFQ audit and design efforts during the investment grade audit which will require a focused effort by TEN, our Design Consultant (ENTECH Engineering) and DOC to deliver a report within 60 days. We are capable and commit to meeting this timeline but respectfully suggest a 90-day duration to allow for more careful evaluation, interaction with DOC personnel and in consideration of typical access constraints in correctional facilities. Our ability to deliver an effective focused audit within a short time period was recently demonstrated on the Capitol Complex GESA project which began under a similar timeline last year.

In essence, TEN's IGA effort has already begun. We have organized the information already collected during the proposal phase and limited site visits. While this has certainly given us the ability to deliver this quote within the tolerance of accuracy required, it also provides us with an understanding of those areas in which we will need to focus additionally to hone an optimal project for DOC. Our team will meet in advance to outline an agenda and identify additional information needed before the audit kickoff meeting so we can be well prepared from the start of the IGA period to use both DOC and the TEN team's time most efficiently.

TEN will perform the Investment Grade Audit with in-house engineers and our design consultant ENTECH who was an integral part of the successful SCI Dallas project. The IGA will include, but not be limited to, the following tasks:

- Analyze utility bills and establish utility baselines
- Physically audit and inspect mechanical and electrical systems to determine, sizing, loads, efficiency, operating conditions and hours of operation
- Analyze energy consumption for major equipment and systems
- Develop list of ECMs to review with Agency
- Develop scopes of work
- Perform energy calculations, methodology, assumptions
- Estimate incentives and rebates
- Estimate environmental costs or benefits (emissions reduction)
- Develop commissioning and M&V plans

Upon the IGA kickoff, we will continue with the activities identified above for the ECMs identified in this quote as well as other opportunities discovered through this process and submit a scope of work for the project to the Commonwealth in the form of an IGA report that will reduce DOC's energy and operating expenses. This will include additional on-site surveys of the facilities and further interviews with key stakeholders to better understand the operating characteristics of the facility. The report will include an executive summary which lists all proposed ECMs with the total implementation cost of each ECM, energy savings, energy cost savings, and useful life of the equipment analyses.

The IGA report will present a thorough analysis of the prison's main energy consuming systems and discuss the scope of proposed ECMs and solutions for SCI Houtzdale. This will summarize the findings and scope honed during bi-weekly meetings of joint DOC and TEN teams. The IGA report will also summarize existing conditions including calculation of baseline energy use and, descriptions of physical conditions, equipment counts, nameplate data, and control strategies prior to project implementation. This analysis will be based on generally accepted engineering practices and reconciled with historic usage. TEN's team of experienced engineers include IPMVP certified measurement and verification professionals (CMVP). Greg Lok and Nikhil Singh will ensure the performance of all proposed solutions can be effectively measured, verified and documented. This will include defining under what conditions the baseline may be adjusted for legitimate changes in weather, occupancy, number of users, and equipment usage.

For each ECM proposed, the IGA will include: 1. Total implementation costs for each measure; 2. Equipment counts; 3. Performance characteristics and efficiency levels of the equipment comprising the proposed measure; 4. Installation and maintenance cost; 5. Useful life; and 6. Energy and cost savings.

Projected energy savings calculations will account for on- and off-peak savings, demand savings, and the interaction between recommended measures. And, all maintenance and monitoring costs will be clearly identified and modeled in the cashflow. The IGA report will also clearly list the contractors and subcontractors who will work on the project and whose inclusion and qualification review will have already been discussed with DOC/DGS.

Project Team

The project team has been thoroughly discussed in the Technical Submission and will include key members from TEN and ENTECH including:

- David Robb – VP, Project Development,
- Greg Lok, PE, CEM, CMVP – VP, Engineering
- Dave Clark – VP, Construction
- Bill Bunton, CEM, CRM – Sr. Energy Engineer
- Nikhil Singh, CEM, CMVP, LEED – Project Eng.
- Mike Schneider, CPM, CLEP, LC – Mgr. Design
- Bryan Haag, PE – ENTECH Principal Energy Eng.
- John Divelbiss, PE – ENTECH Sr. Mech Eng.
- Shawn Deegan, PE – TEN Sr. Project Manager
- Joe Richards – TEN Project Manager (Altoona)
- Daric Holmes – Auditor / Project Designer
- Key sub-contactors

Recommended Project

ECM #	Base Recommended Project (No Avoided Capital Expense Required) Energy Conservation Measure Description	Install Cost	Annual Energy Savings ($)	Annual O&M Savings ($)	Simple Payback	Annual kWh Savings	Annual Nat Gas (MCF)	Annual Wtr/Swr (kGal) Savings	Annual Coal / Gas Savings (MMBTU)	Act-129 Incentive
1	LED Lighting Upgrade (Base)	$ 1,340,932	$ 153,707	$ 31,546	7.2	2,101,107	-423			$ 105,055
2	Lighting Controls	$ 34,534	$ 892		38.7	11,929				$ 596
3a	Compressed Natural Gas (CNG) Conversion	$ 530,618	$ 247,581	$ 113,000	1.5	304,965	-80,711		80,711	$ 15,248
3b	HW Conversion (800HP)+New(700HP)+Stm Inside	$ 4,175,057	$ 173,174		24.1	853,901	13,394			$ 42,695
4	Replace HW & CHW Piping (see below)									
5	Water Conservation (Base)	$ 3,945,373	$ 388,364		10.2		5,363	41,808		
5 Adds	Water Conservation Add Alternates (see below)									
6	Chilled Water Plant Upgrade	$ 2,858,547	$ 59,144		48.3	790,698				39,536
6 Add	Cooling Tower Upgrade (see below)									
7	Building Automation System (BAS) Upgrade	$ 1,319,257	$ 66,192		19.9	336,140	5,030			16,807
8	Roof Replacement w/ addl. Insulation (see below)									
9	Solar Panel Array (see below)									
	DOC Energy Consultant Fee (5%)	$ 710,000								
	Installation Total	**$ 14,914,318**	**$ 1,089,054**	**$ 144,546**	**12.1**	**4,398,740**	**-57,347**	**41,808**	**80,711**	**$ 219,937**

Act-129 Incentives	$ (219,937)
LESS Capital Cost Avoidance	
Net Financed Amount	**$ 14,694,381**

Excess Cummulative Cashflow:	$ 2,268,136
NPV of Cashflow:	**$ 1,503,955**

Potential Expanded Project (with avoided capital expense savings)

ECM #	Expanded Project Additional ECMs (Avoided Capital Expense Incl.) Energy Conservation Measure Description	Install Cost	Annual Energy Savings ($)	Annual O&M Savings ($)	Simple Payback	Annual kWh Savings	Annual Nat Gas (MCF)	Annual Wtr/Swr (kGal) Savings	Annual Coal / Gas Savings (MMBTU)	Act-129 Incentive
5-Add-3	Water Conservation - Add #3 (+ 780 porceain to SS)	$ 1,697,107	$ 19,370	$ 20,000	43.1			2,350		
6 Add	Cooling Tower Upgrade	$ 1,093,389			N/A					
	Additional DOC Energy Consultant Fee (5%)	$ 140,000								
	Expanded Project Installation Total	**$ 17,844,814**	**$ 1,108,424**	**$ 164,546**	**14.0**	**4,398,740**	**-57,347**	**44,158**	**80,711**	**$ 219,937**

Act-129 Incentives	$ (219,937)	
LESS Capital Cost Avoidance	$ (1,800,000)	= $300,000 x 6 ECMs (1,2,3,5,6,7)
Net Financed Amount	**$ 15,824,877**	

Excess Cummulative Cashflow:	$ 1,357,581
NPV of Cashflow:	**$ 850,217**

ECMs Evaluated But Not Included At This Time

ECM #	ECMs Evaluated But Not Included Energy Conservation Measure Description	Install Cost	Annual Energy Savings ($)	Annual O&M Savings ($)	Simple Payback	Annual kWh Savings	Annual Nat Gas (MCF)	Annual Wtr/Swr (kGal) Savings	Annual Coal / Gas Savings (MMBTU)	Act-129 Incentive
1-Add	LED Lighting - Add 913 New Fixtures vs Retrofit	$ 126,909	$ 2,430		52.2	32,947				
4	Replace HW & CHW Piping (above ground)	$ 9,450,383	$ 38,286		246.8		2,568	2,102		
5 Add1&2	Water Conservation -Add #1 & #2	$ 1,592,333			N/A					
8	Roof Replacement w/ addl. Insulation (R30)	$ 6,124,945	$ 27,233		224.9			3,337		
9	Solar Panel Array (100 kW)	$ 272,194	$ 9,971	$ 444	26.1	133,298				

ECM summary table notes: **I.** 3a savings are based on a fuel switch from a mix of coal and fuel oil to natural gas. The new equivalent natural gas baseline for the plant is 81,711 mcf; **II.** Simple payback is calculated before Act-129 incentives; **III.** Additional ECM pricing is based on an incremental add to the base recommended project; **IV.** Per bulletin #8, DOC could add $300,000 in capital cost avoidance for each of ECMs 4,8 and 9 but they would still present a long payback; **V.** Solar O&M savings are based on 5 years of RECs divided by 18 years.

The energy rates used to calculate savings are $0.0726 / kWh and $8.00 / MCF for natural gas and $6.46 / Kgal for water and $1.62 / kgal for sewer charges. Each has been escalated from the base year to the first year of savings. O&M savings are included in the cashflow, per bulletin #2, item 4.

Annual Financial Projections

The cash flow on the next page illustrates that the proposed project will pay for itself within 18 years (including construction) when modeled at a 4% interest rate. The net present value of the excess cash flow, over 18 years, is $1,502,779 based on a 4% discount rate. The columns in the cash flow represent the following:

A. Annual energy costs without improvements
B. Annual energy costs with improvements
C. Annual energy cost savings (A-B)
D. O&M Savings
E. Total Annual Savings
F. Payments for financing equipment
G. Payments for M&V services
H. Net annual benefit
I. Cumulative cash flow
J. Net Present Value of cash flow

Note: The payments in column F of the cash flow include the repayment of $588,656 in capitalized interest cost based on a twelve (12) month construction period. Construction period savings are also applied as an initial payment in month one (1) after construction is complete and are composed of those ECM's that can be completed in the early part of construction. PenElec Act 129 incentives in the amount of $219,937 will be paid directly to TEN and have been deducted from the financed project cost. TEN will prepare the necessary documentation for any potential incentives and present them to DOC for signature and submission. DOC will receive the full benefit for any incentives paid to TEN.

Project Cash flow

Year	Annual Energy Costs (Before) A	Annual Energy Costs (After) B	Annual Energy Savings C=A-B	O&M Savings D	Total Annual Savings E=C+D	Annual Financing Payments F	Other Payments (M&V) G	Net Annual Benefit H=E-F-G	Excess Cumulative Cashflow I
0	$ 3,488,526	$ 2,959,811	$ 528,715	$ -	$ 528,715	$ -	$ -	$ -	$ -
1	$ 3,523,411	$ 2,434,356	$ 1,089,055	$ 144,546	$ 1,233,602	$ 1,724,494	$ (22,000)	$ 59,822	$ 59,822
2	$ 3,558,645	$ 2,458,700	$ 1,099,946	$ 144,546	$ 1,244,492	$ 1,195,779	$ (22,000)	$ 70,713	$ 130,535
3	$ 3,594,232	$ 2,483,287	$ 1,110,945	$ 144,546	$ 1,255,492	$ 1,195,779	$ (22,000)	$ 81,712	$ 212,248
4	$ 3,630,174	$ 2,508,119	$ 1,122,055	$ 144,546	$ 1,266,601	$ 1,195,779	$ -	$ 70,822	$ 283,070
5	$ 3,666,476	$ 2,533,201	$ 1,133,275	$ 144,546	$ 1,277,822	$ 1,195,779	$ -	$ 82,042	$ 365,112
6	$ 3,703,141	$ 2,558,533	$ 1,144,608	$ 144,546	$ 1,289,154	$ 1,195,779	$ -	$ 93,375	$ 458,487
7	$ 3,740,172	$ 2,584,118	$ 1,156,054	$ 144,546	$ 1,300,600	$ 1,195,779	$ -	$ 104,821	$ 563,309
8	$ 3,777,574	$ 2,609,959	$ 1,167,615	$ 144,546	$ 1,312,161	$ 1,195,779	$ -	$ 116,382	$ 679,690
9	$ 3,815,350	$ 2,636,059	$ 1,179,291	$ 144,546	$ 1,323,837	$ 1,195,779	$ -	$ 128,058	$ 807,748
10	$ 3,853,503	$ 2,662,419	$ 1,191,084	$ 144,546	$ 1,335,630	$ 1,195,779	$ -	$ 139,851	$ 947,599
11	$ 3,892,038	$ 2,689,043	$ 1,202,995	$ 144,546	$ 1,347,541	$ 1,195,779	$ -	$ 151,762	$ 1,099,361
12	$ 3,930,958	$ 2,715,934	$ 1,215,025	$ 144,546	$ 1,359,571	$ 1,195,779	$ -	$ 163,792	$ 1,263,153
13	$ 3,970,268	$ 2,743,093	$ 1,227,175	$ 144,546	$ 1,371,721	$ 1,195,779	$ -	$ 175,942	$ 1,439,094
14	$ 4,009,971	$ 2,770,524	$ 1,239,447	$ 144,546	$ 1,383,993	$ 1,195,779	$ -	$ 188,214	$ 1,627,308
15	$ 4,050,070	$ 2,798,229	$ 1,251,841	$ 144,546	$ 1,396,387	$ 1,195,779	$ -	$ 200,608	$ 1,827,916
16	$ 4,090,571	$ 2,826,212	$ 1,264,359	$ 144,546	$ 1,408,906	$ 1,195,779	$ -	$ 213,127	$ 2,041,043
17	$ 4,131,477	$ 2,854,474	$ 1,277,003	$ 144,546	$ 1,421,549	$ 1,195,779	$ -	$ 225,770	$ 2,266,813

NPV of Cashflow (column H): $1,502,779

Energy Conservation Measure Descriptions
The following pages describe the technical feasibility, suitability, reasonableness, comprehensiveness and acceptability of the proposed ECMs. While we have not yet found a way to incorporate all the core ECMs in a self-funding project, we commit that TEN will continue to investigate all options to improve the overall project value for DOC. This continued due diligence has proven effective on our other projects successfully delivered to the Commonwealth.

Per Section 4.3 of the RFQ, the total energy savings projected in the final scope of work will be at least 95% of the savings projected in the Quote, the actual ECM costs shall be within 10% of the costs listed in the CEA, and the project will be self-funded over the financial term of the project (maximum term of 18 years).

Savings calculations and equipment cutsheets are placed in the appendices and tabbed with the ECM #.

Project Monitoring and Maintenance Services
The measurement and verification of the proposed ECMs is anticipated to be conducted according to the M&V plan identified on page 16 of the Technical Submission. Onsite measurements, field work and report generation will be prepared by Nikhil Singh, a Certified Measurement and Verification Professional (CMVP) and Certified Energy Manager (CEM), in conjunction with Greg Lok, his supervisor who is also a CMVP and PE. The proposed M&V plan includes IPMVP options A, B, C & D and is more specifically addressed on page 30 of this volume.

It is anticipated that DGS will incorporate the upgraded systems into their preventative maintenance routines which includes maintenance as a means of ensuring availability and maximizing revenues. TEN's project management team will be available to facilitate warranty claims or repair work as necessary. Project training is included in the installation cost of the project. TEN will provide O&M manuals for all installed or impacted equipment and systems.

Baseline Utility Data (per RFQ and Bulletins 1-8)
The tables following summarize utilities as provided in the request for quote and supplemented with additional information. This information was analyzed to aid in identifying areas for energy savings and to ensure we did not over-project savings in any one area. The total area and costs were derived from the utility usage reports provided. Utility rates used to quantify energy or water / sewer savings were adjusted to reflect the stipulated values stated in Bulletins 1-8. The resulting analysis also served as the starting point for bottom-up and top down savings calculations.

SCI Houtzdale - 2017 Baseline Utility Costs						
Area	Electric Cost	Water	Sewer	Fuel Oil	Coal	Total
Sq Ft.	$	$	$	$	$	$
800,000	$ 820,957	$ 1,105,194	$ 769,194	$ 793,181	$ 71,680	$ 3,488,526

Details of this analysis and all savings calculations can be found as an attachment to the proposal, placed there to ensure compliance with the page limitations of this section.

SCI Houtzdale - 2017 Baseline Utility Consumption						
Area	Electric	Water	Sewer	Fuel Oil	Coal	Total
Sq Ft.	MMBtu	kGal	kGal	MMBtu	MMBtu	MMBtu
800,000	38,580	115,113	116,485	62,853	17,712.00	119,145
Btu/Sq.Ft. Gal/Sq.	48,225	144	146	78,566	22,140	148,931

SCI Houtzdale - FY2017 Fuel Consumption and Steam Production Summary					
Coal Usage (Tons)	Steam from Coal (Lbs)	Oil Usage (Gal)	Steam from Oil (Lbs)	Total Steam (MLbs)	Fuel Input (mmBTUs)
738	15,129,741	453,188	48,031,928	63,162	80,565

The tables above determine the raw Energy Usage Index (EUI) for steam, fuel oil, coal and electricity, as well as annual gallons / sf for water / sewer. Steam is currently used at the central plant to produce hot water. Hot water from the central plant is used for heating and domestic hot water production. Direct users of steam are primarily the kitchen, laundry and the HVAC units serving these areas.

Electricity consumption for most of the facility is billed based on a single meter therefore, electricity consumption is not metered per building. The billing rate from Penelec is based on the terms and conditions of the General Service Primary PN-GPD rate tariff. The electric tariff includes charges for demand (kW), reactive power (rkVA) and energy (kWh). Electric commodity charges for energy only are provided by a separate supplier.

Major consumers of electricity at the facility include lighting, chilled water production and HVAC fans. All these areas are address in the core ECMs of this analysis.

Fuel oil and coal are used in steam production. The steam is metered at the central plan individual buildings or end uses are not metered. Propane is currently used at the facility in the kitchen and in Housing unit K. Propane use was not analyzed for this proposal.

The core ECM savings on the following pages are based on this analysis.

Water and sewer charges represent the biggest utility expense for SCI Houtzdale. However, due to the purchase agreements for the utilities, the savings potential is limited.

ECM #1 LED Lighting Upgrade

Existing Conditions
Existing Lighting Systems

The primary interior lighting consists of a wide range of fluorescent lighting technologies including first generation T8 linear lamps and electronic ballasts; T12 high output linear lamps and magnetic ballasts; incandescent and fluorescent screw-in medium based lamps; and plug-in fluorescent lamps. The exterior site lighting, building façades and high mast lighting, consists of multiple types of highly efficient LED luminaires and retrofit kits. The exterior luminaires located outside of the perimeter fence at the central plant consists of various wattages of HID (High Intensity Discharge) for shoe-box, wall-pack and flood type luminaires.

Proposed Solution
Exterior lighting solutions (Outside Perimeter; Exterior Central Plant)

TEN will replace the existing HID perimeter wall-packs and shoe-box style luminaires on the building façade with new highly efficient LED equivalents to match lumen output based on the existing wattage use. New LED wall-packs and shoe-box luminaires will come equipped with photocell sensors for automatic dusk to dawn operation for fixed hours of operation.

Interior lighting solutions (Inmate Housing Units; Education Center; Main Operations Building; Process Administration Building)

The three main general area types in-regards to the lighting scope are the inmate housing units (both open dorm style and individual cell units); administrative and operations; and interior central plant. Each of these buildings with specific lighting systems to these areas are as follows;

- Where existing linear fluorescent T8 lamps and luminaires are serviceable and in good working order, they will be retrofitted with a TYPE "C" TLED highly efficient 12w linear LED lamp with external driver lighting system.
- The classrooms located in the education center have 8' foot vapor tight fixtures with T12 linear lamps and standard magnetic ballasts. TEN will replace with a new LED vapor tight luminaire that carry a system life rating of 84,000 hours.
- The three inmate dining halls and the staff dining hall each have large cylinder HID luminaires that will be replaced with new IP66 waterproof rated LED high bay fixtures meeting the requirements for NSF for food processing requirements.
- The main gymnasium has 250-watt metal halide high bay fixtures. TEN will replace with a new LED high bay luminaire that has a lifespan rating of 100,000 hours. Its construction is diecast aluminum with a tempered glass lens which is extremely durable and impact resistant which is ideal for an athletic facility.
- The open area of the central plant and the auto shop have 400-watt metal halide high bay fixtures. TEN will use the same approach to replace the existing HID high bay fixtures but with a more traditional style LED high bay. The proposed LED high bay is a 200-watt with a polycarbonate refractor and bottom lens for improved lumen output.
- Supplemental lighting consists of incandescent and fluorescent plug-in lamp technology. TEN proposes to retrofit these with new highly efficient LED screw-in type lamps for all medium base applications and a direct plug and play LED lamp for all quad pin-based applications.

(Type C): Direct Wire - Separate Driver: The Driver is located separately from the LED tube, much like a fluorescent ballast. In this manner, the lamps are lighter, the driver and LEDs operate cooler with maximum efficiency and safety. Existing ballasts are eliminated as a potential future maintenance requirement. This is our approach to all linear retrofit applications.

Baseline Lighting Consumption and Proposed Savings

Building	Total kWh Savings	Total kW Savings	Existing Ltg kWh	Proposed Ltg kWh	Existing Ltg kW	Proposed Ltg kW	Addl. Clg. Sav. kWh	Addl. Clg. Sav. kW
SCI HOUTZDALE	1,925,387	300	2,756,069	922,037	495	186	91,355	14
SCI HOUTZDALE (OUTSIDE FENCE)	187,650	25	314,186	135,470	61	26	8,934	1
Total	**2,113,036**	**325**	**3,070,255**	**1,057,508**	**556**	**212**	**100,289**	**15**

Note: Total lighting kW savings have been reduced by a diversity factor of 85% applied to interior lighting.

Quantity Summary of Proposed Lighting Upgrades

Retrofit Type	Total Fixtures	Total Unit Qty
New Interior LED Luminaires	184	184
New Exterior LED Luminaires	45	45
High Efficient Electronic Instant Start LED Drivers	5245	5245
TLED Linear LED Lamps 2', 3', 4' (Includes T8 & T5 TLED Lamps)		13182
Screw-in & PL LED Lamps (some fixtures have multiple lamps)	65	93
LED COB (Chip On Board) 120/277v Screw-in Bypass Lamp	503	503
New Exit Sign Retrofit Kits	130	130
No Retrofit	87	87
TOTAL	**6259**	
No Retrofit	87	
Replacement/Retrofit	**6172**	

Basis of Savings Calculations

- kWh Savings = (existing fixture kW * burn hours) – (post fixture kW * burn hours)
- kW Savings = (existing fixture kW) – (post fixture kW), then reduced by a diversity factor to account for the fact that not all fixtures are 100% on at any given time or burned out.
- Additional savings are also applied for cooling and heating penalties as well as lighting controls.

The following table correlates the burn hours provided in the bulletin with the hour groups used in the line by line audit. TEN is confident this approach has yielded savings within the 95% accuracy required of the RFP.

Hour Groups	Hour Group Description	Hours
CELL	Individual Inmate / Open Dorm Holding	2912
CLASSROOM	Educational / Instructional	2600
COMMON AREA	Lobby Areas / Corridors / Vestibules	8760
CONFERENCE ROOM	Meeting Rooms/ Interview	1560
ELECTRICAL MECHANICAL	Electrical-High Voltage / Mechanical-Boiler Room	520
EMERG	24 Hour / 7 Days A Week	8760
EXTERIOR	Exterior Building Façade / Parking / Walkway	4380
JANITOR	Custodial / Housekeeping	1456
KITCHEN; LAUNDRY	Kitchen / Dining Areas; Laundry Services	5824
LOW USE STORAGE	Areas with minimal occupancy	200
OFFICE	Administrative Single Occupant / Open Area	3640
STAFF RESTROOM	Unisex Restroom / Single Occupant	1456
STORAGE	Areas with Medium Occupancy	520
INMATE RESTROOM	24 Hour / 7 Days A Week	8760
GYM; LOCKER ROOM	Athletic Facility; Locker Room Areas	5824

Maintenance Impact
Through the implementation of these upgrades, SCI Houtzdale will realize operation cost savings either through the extended warranties, reduced energy usage of proposed LED luminaires, lamps and drivers, as well as the increase of operating life of new equipment. Applicable Penelec rebates and PJM Energy Efficiency incentives will be maximized where applicable. Lighting material savings are calculated in the amount of $31,546 annually.

Training
Training will be provided to address warranty procedures. TEN will deliver to SCI Houtzdale comprehensive operations and maintenance manuals including as built documentation.

Measurement and Verification
IPMVP Option A is the industry standard for M&V for lighting upgrades and accomplished through pre-and post-measurements of luminaire power as it relates to a meaningful sampling of typical luminaire types and retrofit locations and their associated burn hour groups.

ECM #2 Lighting Controls

Proposed Solution
Occupancy sensors will be utilized in occupied areas to maximize savings by reducing hours of operation. Dual technology versions use ultrasonic and infrared to ensure power savings and occupancy detection. Self-adaptive, or self-learning technology, eliminates the need for manual range adjustments.

Maintenance Impact, Training and Measurement and Verification will be completed in the same manner as ECM #1 LED Lighting Upgrade.

Add Alternate #1
An additional option, TEN proposes to replace rather than retrofit (913) recessed linear fluorescent 2x4 troffers with new LED edge-lit panel luminaire. This provides a cleaner look with a solid construction flat panel design. This will eliminate all the difference lens type fixtures (prismatic, parabolic, and microcell) and standardize to one type lens and simplify the aesthetics. Flange and surface mount type 2x2 and 2x4 fixtures will be retrofitted with TLED lamps and external drivers.

ECM #3 Central Heating Plant Upgrades:
ECM #3a. Compressed Natural Gas Conversion

Existing Conditions
Steam is required to be available 24 hours per day 365 days per year at SCI Houtzdale. The Central Boiler Plant at SCI Houtzdale contains four (4) high pressure steam boilers. The boilers produce steam for heating, heating hot water, domestic hot water, kitchen and laundry uses. Two B&W steam boilers are coal-fired boilers, which can also be fired on #2 fuel oil. Additionally, there are two steam firetube boilers. Currently, these two boilers are operated on #2 fuel oil only but are equipped with dual fuel burners which can fire natural gas. However, there is no natural gas supplied to the facility. Fuel oil for all boilers is supplied from a single 20,000 gallon above ground fuel oil tank.

The Houtzdale's DEP Air Quality Permit only allows the use of coal for 90 days each year. The B&W boilers typically fire using coal during colder weather from late December to late March. When the B&W boilers are idle the two (2) firetube boilers are utilized using fuel oil.

Proposed Solution
This ECM provides for an alternate fuel source to #2 fuel oil at the Central Plant. Compressed natural gas (CNG) will be utilized as the alternate fuel.

TEN proposes to provide a truck unloading facility for the CNG fuel. The truck unloading area will be located near Stageing Road, in an existing grass area at the north end of the Prison property, separated from the other buildings on campus. The unloading facility location will be in excess of 200 feet north of the Pump House and 450 feet east of the Administration Building.

TEN will construct the CNG unloading facility for three tractor trailers complete with a surface of concrete pads, for truck areas and a small building, bituminous paving and rolled gravel. The use of a gravel base, around the concrete trailer pad foundations, could minimize requirements for drainage improvements. The facility will include concrete barriers, a security fence with gates, electrical grounding grid, electrical service panelboard, and site lighting. An underground HDPE gas line, one conduit for electrical power, and one conduit for data will extend approximately 700 feet from the decompression equipment to the Central Plant. Electrical and communications will be tied into sources within the Central Plant.

The CNG supplier will provide a constant stream of trucks of CNG, natural gas decompression equipment enclosed in a packaged skid, and piping between the trucks and the decompression equipment. The decompression equipment, trucks and fuel will all be provided under an annual compressed gas supply contract with the Prison. The decompression equipment will be capable of being monitored remotely via the Prison's Niagara Tridium system and at the CNG supplier's offices.

Gas will be regulated from a medium pressure (40 to 50 psig) to a lower pressure (5 to 20 psig) at the Central Plant exterior, and feed the boilers in the central plant, and/or for other ECM options using natural gas at the facility. This will maintain an alternate source of fueling for boilers which can maintain the entire prison under all weather conditions, while having a backup fuel available.

The 500 HP Kewanee boiler will be removed after the other boiler improvements have been installed to maintain full service capability to the prison.

Scope: (Option 1)
- Design ECM and furnish submittals for approval
- Construct the CNG unloading facility

- Install underground 4" HDPE natural gas piping, electrical and data from the CNG unloading facility to the Central Plant.
- Install a 4" natural gas piping main through the Central Plant to the Cleaver Brooks boiler. Install gas metering at the Cleaver Brooks boiler. Metering will be tracked by Niagara Tridium.
- Factory start-up the CNG decompression equipment, valve regulating stations and for firing the available gas fired boilers once a CGN supply contract is initiated.
- Commission the system. Provide as-built drawings, training, and warranty.

Maintenance Impact

- Grounds maintenance will increase slightly from this ECM. The prison will be required to remove snow accumulations from the truck unloading station.
- A reduction in the use of oil will allow a lower maintenance frequency for the dual-fuel burners and boilers.
- An annual O&M savings in the amount of $113,000 will be realized from elimination of rebuilding at least micronizer mill per year, reduced coal permitting, and reduced chemical treatment.

Training

Training will be provided for the operation of the CNG system.

Measurement and Verification

Measurement and verification will be accomplished by IPMVP Option A for the electric consuming coal equipment. For the fuel portion, the savings would be the Baseline Fuel Consumption multiplied by the difference in the fuel cost.

ECM 3b Hot Water Boiler Conversion, New Steam Plant Inside Fence

Existing Conditions

Steam is required to be available 24 hours per day 365 days per year at SCI Houtzdale. The Central Boiler Plant at SCI Houtzdale contains four (4) high pressure steam boilers. The boilers produce steam for heating, heating hot water, domestic hot water, kitchen and laundry uses. Two B&W steam boilers are coal-fired boilers, which can also be fired on #2 fuel oil. Additionally, there are two steam firetube boilers. Currently, these two boilers are operated on #2 fuel oil only but are equipped with dual fuel burners which can fire natural gas. However, there is no natural gas supplied to the facility. Fuel oil for all boilers is supplied from a single 20,000 gallon above ground fuel oil tank.

The Houtzdale's DEP Air Quality Permit only allows the use of coal for 90 days each year. The B&W boilers typically fire using coal during colder weather from late December to late March. The coal system is maintenance intensive and not energy efficient.

Significant amounts of energy are used to pulverize coal, operate the emissions, and ash collection systems required to operate the coal boilers. Micronizer mills, which pulverize the coal, need to be rebuilt at least every 2 years (essentially 1 per year). Additionally, the emissions systems require regular monitoring and maintenance.

To produce heating hot water and domestic hot water, steam is converted to 180°F to 190°F via three heat exchangers located in the Central Plant. This hot water is pumped to the various buildings on campus via an underground hot water piping network. The existing hot water pumping system uses primary, secondary, and tertiary pumps, some of which do not have variable frequency drives and operate at a constant speed.

Steam for the Laundry and Kitchen areas is distributed to the buildings via a separate underground/aboveground steam and condensate piping system.

Proposed Solution
ECM 3b is divided into two parts that anticipates a new, inside the fence, steam plant to be installed prior to the installation of a new hot water boiler and prior to the conversion of the existing hot water system to use only hot water boilers in the lieu of the heat exchangers. In summary the ECM 3b converts boiler #4 from steam to hot water, provides a new 700 HP (or smaller) hot water boiler, and provides a new smaller capacity steam plant in Building 5 to meet the related loads in Laundry and Kitchen facilities.

ECM 3b Part 1: Install New Steam Boilers inside fence in Building 5
TEN intends to provide the installation/startup of the new steam plant in Building 5 that will be needed prior to converting existing 800 HP Cleaver Brooks fire-tube steam boiler (manufactured in 2009) to a hot water boiler and the installation of a new variable primary pumping system. TEN proposes to install two new 250 HP steam boilers along with a new deaerator and new feedwater pumps. The new steam plant will eliminate the need for the existing steam and condensate piping between the plant and Building 5.

Scope:

- Design ECM for the new steam plant in Building 5 and furnish submittals for approval.
- Remove the hot and chilled water pumps located in the Main Pump Room inside the fence from service and bypass those pumps using piping. Disconnect and remove the electrical services to the pumps and the pump controls.
- Install two Cleaver Brooks CBEX Elite 250 HP dual-fuel gas/oil steam boilers on new concrete pads. Include a new 6" steam piping to connect to the existing piping in Building 5. Include stop-check valves and steam meters for each new steam boiler.
- Install a new package deaerator with two feedwater pumps on a new concrete pad. Include new 4" steam piping from the existing main with a pressure regulator and steam meter. Connect to a new chemical feed system in this new steam plant.
- Extend natural gas piping from the 4" gas main installed at the Central Plant under ECM-3a. Include regulators and gas meters for each boiler. Natural gas usage will be metered and tracked at each steam boiler by Niagara Tridium. Provide oil piping in containment underground between the Central plant and the new steam plant in Building 5.
- Extend fuel oil supply and return piping to each boiler from the existing oil transfer pumps. Include fuel oil metering, tracked by Niagara Tridium.
- Include new flues, feedwater valves and piping, blowdown piping, power and control to each boiler. Connect to a new blowdown separator in the new steam plant.
- Control the two boilers and feedwater pumps from Niagara Tridium. Include BACnet connections to each boiler.
- Water balance the feedwater system.
- Include factory start-up, commissioning, as-built drawings, training, and warranty.
- Following successful start-up, disconnect and remove the 500 HP Kewanee steam boiler and accessories and remove the boiler, controls and concrete pad after the hot water system in the Central plant is converted. Patch the roof/wall where the stacks were removed. If desired, we can consider an option to leave the existing Kewanee in place to serve as a backup for steam.
- TEN will complete a full steam trap study of the remaining steam traps in the system. Ultrasonic testing and thermal imaging will be used to identify steam traps that are not functioning properly. Steam traps that are found to be failed open, failed closed, blocked, or leaking will be repaired or replaced.

- During our audit of the buildings, we surveyed the visible portions of the steam distribution system and noted limited sections of pipe, valves, fittings, PRVs, and strainers where the existing insulation was either missing or damaged. It is a common occurrence for steam pipe insulation to become damaged or missing after steam system repair activities. TEN will install removable insulation blankets on steam valves, fittings, PRVs, and strainers with missing insulation. Straight pipe runs will be insulated with new rigid insulation of the appropriate thickness for the application.

ECM 3b Part 2: Convert Cleaver Brooks Boiler to Hot water and Upgrade Hot Water Piping and Pumps

Once the new steam boilers are installed and operating, TEN intends on converting the existing 800 HP CB boiler to hot water, and to provide a new 700 HP (or smaller) firetube hot water boiler. The 500 HP Kewanee steam boiler (installed 1994) will not be converted to hot water but will be removed after all other related items with ECM 3b(3) are completed.

Scope:

- Design ECM for new Hot Water system in Central plant and furnish submittals for approval.
- Install a new 700 HP (or smaller) Hot Water firetube boiler where two of the coal boilers were located.
- Contract with Cleaver Brooks for them to convert the boiler to hot water. Conversion will include:
    - Remove steam boiler outlet nozzle, feedwater piping connection, steam trim. and plug blowdown connections.
    - Weld new 12" flanged water inlet and outlet connections to the boiler and certify welds.
    - Replace the pressure relief valves.
    - Install new drain valves and air vents.
    - Provide new water level safety controls including automatic and manual low-water cutoffs.
    - Install temperature sensor to adjust burner firing rates.
- Install new 12" hot water piping and control valves from the Cleaver Brooks Boiler to the new (or existing) hot water distribution piping system contemplated under ECM-4.
- Install three new hot water pumps with variable frequency controls to replace the existing primary, secondary, and tertiary hot water pumping system.
- Provide a new air separator, make-up water and chemical feed systems. Reuse the existing hot water expansion tank.
- Control the hot water boiler and pumps from the Niagara Tridium controls system. Include BACnet connections to each pump VFD.
- Water balance the hot water pumps and boiler.
- Include factory start-up, commissioning, as-built drawings, training, and warranty.

Maintenance Impact

- The new hot water boiler system will reduce energy costs and the level of maintenance required in the Central Plant.
- Boilers, new piping and new variable primary pumps will be replaced with new and upgraded hot water boilers.
- Coal handling, coal pulverizing, emissions systems, ash handling, and ash removal requirements will all be eliminated.

Training

Training will be provided by TEN and major equipment suppliers. Training will cover any newly installed equipment and existing equipment where maintenance procedures have changes.

Measurement and Verification
Measurement and verification will be accomplished by comparing the consumption of compressed natural gas and fuel oil. Fuel meters at each boiler, steam meters, and hot water BTUH meter readings will be monitored and logged by Niagara Tridium. Electrical use can be monitored and logged via the BACnet connections to the hot water pump VFDs. These readings can be compared to existing logs. Logs can be saved over time and reviewed from month to month and year to year. IPMVP option C/B.

Energy Savings Analysis
Energy savings analysis are in Appendix 3 and include the following assumptions.
1) Convert central plant CB boiler to HW.
2) Operate central plant new steam boiler(s) for kitchen and Laundry
3) Operate new hot water boilers in the central plant.

Additional Options Evaluated

Hot water condensing boilers – While this would have offered additional savings, it also required the installation of new domestic water heat exchangers inside the mechanical rooms to operate on lower distribution hot water water temperatures. The combination of these factors and its high cost outweighed the benefit of the additional savings.

Decentralization – This solution included installation of a propane air mixing plant to serve as a secondary backup fuel that could be delivered through new natural gas distribution piping to each building along with new hot water boilers for each logical building or combination of buildings. Cooling would be addressed through air cooled chillers that are either roof or ground mounted depending on the security requirements for each area. The new steam boilers in building 5 remain a part of this solution. After the clarification in bulletin #8 that the $300,000 avoided capital expense was limited to each ECM, this option became less attractive. If desired by DOC, TEN could investigate a decentralization option further as it would eliminate the need to replace the existing underground distribution piping which is currently too expensive to fit in either a base recommended project or one that includes substantial avoided capital expense. Note - No labor savings were included in this analysis. TEN also appreciates that this is a less desirable solution as it would likely cause a reallocation of staff currently assigned to the central plant. Further, it is anticipated that decentralization may require another $2 - $3 million in capital funding to cashflow. This is substantially less, however, than the cost to replace the HW and CHW distribution system.

Maintain Steam in the plant – There may also be merit in re-evaluating maintaining steam in the central plant with a combination of appropriately updated and new boilers that can run on both natural gas and fuel oil. In this manner a larger portion of available savings can be focused on corrective piping/pumping in the plant along with upgrades to the distribution system.

ECM #4 Replace Existing Buried Hot Water and Chilled Water Piping

(Not in Base Recommended Project Due To Long Payback)

Existing Conditions

The Prison has underground hot water and underground chilled water distribution systems. Both of these distribution systems begin at the Central Plant and proceed underground to serve most of the buildings on campus. The hot water distribution system serves 16 buildings or groups of attached buildings and the chilled water distribution system serves 13 buildings or groups of attached buildings.

The distribution systems were originally designed as part of the overall prison design in 1993 and the hot water distribution loop was expanded in 1998 to include Blocks I and J. Hot water pumps were increased in horsepower over those originally design, possibly to account for the additional loads. The main branches include 8" hot and chilled water piping with smaller branches to serve Building One and Block H.

The underground piping distribution systems are approaching 25 years of age and have developed leaks that require repair. Based on make-up water meter readings, the hot water system constantly leaks approximately 3 gallons per minute (gpm) of heated/treated hot water used for heating buildings/DHW systems. The chilled water system leaks approximately 1 to 2 gpm of chilled water while operating. The facilities department has been unable to locate and repair all of the underground leaks. Extensive repairs and costs associated with these piping systems continue. Over time these leaks will continue to occur losing greater amounts of energy and treated water as the piping degrades.

There is also an underground steam and condensate piping that serves laundry and kitchen facilities. This piping system is far less extensive, going between only the central plant and Building 5. This underground steam and condensate piping have not been a concern for the prison and is considered to be in good shape if re-use is desired.

Proposed Solution

TEN proposes to replace the HW and CHW underground piping distribution systems with new overhead hot water and chilled water piping distribution systems. The new piping systems will serve all of the same buildings the existing piping systems serve, but via an overhead system. Some sections of the piping systems will continue to be routed underground in places such as under the perimeter and interior fencing. Other sections will be bridged higher over roadways and access pathways designated by the prison.

The piping mains which leave the Central Plant will be increased in size from 8" to 10" to account for the additional loads of Blocks H, I and J, which the current 8" mains were not sized for. This larger sizing will also reduce total pressure drop allowing both the hot and chilled water piping systems to pump using primary variable speed pumps in lieu of the primary, secondary, tertiary pumping system which currently exists. The new piping system will save on pumping costs and virtually eliminate any opportunity for underground piping leaks.

As stated, the majority of the hot and chilled water piping systems will run around the campus at approximately 5' above grade for easy access during construction, and with maintenance needs. Where needed the pipe will be raised and bridged to allow vehicles trucks to pass under them where access needs are identified.

Scope:

- Design ECM related HW and CHW piping systems and furnish submittals for approval.
- Locate all buried utilities via PA One-call and a private utility locating firm.
- Excavate under the perimeter fences for the 180-foot underground portion of the piping system. Install pre-insulated conduit systems for underground portions of the piping. Backfill and restore surfaces. Watering of seeded areas will be by the inmates.
- Provide above grade (5' typical) piping distribution systems of welded steel piping, insulated with mineral wool insulation and jacketed with aluminum. Piping to have 4 pipes: hot water supply, hot water return, chilled water supply and chilled water return. Provide bridge crossovers where needed.

- A separate aboveground set of pipes, located outside the perimeter fence, will be added to serve Administration Building 1, Warehouse Building 13, and Outside Labor Foreman Shop Building 25.
- Provide 5' high galvanized steel supports designed to support all 4 pipes. Each support will have a concrete base. Typical support spacing is on 20 foot centers but will be closer for smaller pipe spans. Pipe bridges will be provided as needed for vehicle access where identified.
- Provide expansion loops/joints in locations required to accommodate the expansion and contraction of piping.
- Provide butterfly isolation valves at each building connection.
- Connect into existing pipe risers of each building at approximately 5 feet above grade. Cut, patch and seal each building as needed for new pipe penetrations.
- Water balance the new hot and chilled water pumps and distribution systems. Pumps will be installed under ECM 3b and ECM 6.
- Abandon the existing underground piping systems. Provide welded caps where the abandoned underground systems extend above grade.
- BTUH meters will be provided at each building connected, by NRG under ECM 7.
- Include as-built drawings, training, and warranty.

Maintenance Impact
1. The above grade piping systems will eliminate the current leaks minimizing chemical treatment requirements.
2. Locating leaks in the future will be simplified due to the overhead piping system.
3. Future repairs, if needed, will be simplified due to the overhead piping system.

Training
Training will be provided by TEN.

Measurement and Verification
Measurement and verification of hot water energy savings will be accomplished by comparing the consumption of compressed natural gas and fuel oil. Fuel meters at each boiler and hot water BTUH meter readings will be monitored and logged by Niagara Tridium. Chilled water system energy savings will be accomplished through electrical power savings. Measurement and verification of electrical savings will be accomplished by comparing past electrical usage with future usage. Pumping electrical savings can be monitored and logged via the BACnet connections to the hot water and chilled water pump VFDs. These readings can be compared to existing logs. Logs can be saved over time and reviewed from month to month and year to year.

Measurement and verification of water savings will be accomplished by comparing past make-up water meter readings with future make-up water meter readings and by comparing past chemical treatment costs with future chemical treatment costs. This is best described as IPVP Option C / B.

Alternatives

Leak Detection Study & Repair – A portion of the net present value (NPV) of the excess cashflow currently valued at $1.5 million could be used to complete a comprehensive leak detection study to identify areas requiring repair or anticipating repair in the near future. This fund can be used to address key areas of the distribution system at a much lower cost than full replacement.

ECM #5 Water Conservation

Existing Conditions
Water pressures above 80 psi will void the warranty of most plumbing fixtures. Facility staff has replaced hundreds of porcelain fixtures due to vandalism, many existing porcelain water fixtures in the housing units are cracked, in need if replacement if not already done so, and are older, high-consumption fixtures. There are additional cell stainless steel combination fixtures that appear to be in working order but are high-consumption units. There are a few housing units with Sloan electronic flush controls, which are not preferred by the facility because they are costly to maintain and highly susceptible to water damage. The porcelain cell faucets are mostly mechanically activated, and these can be left running when "pegged". The shower valves are mostly rotary style and can be left running for extended periods of time. The single unit restroom fixtures for staff and inmates are mostly standard high consumption toilets and faucets.

Proposed Solution
The facility water pressure is recommended to be set between 50-60 psi at the median first floor level of the housing units to avoid violating manufacturers warranties.

Retrofit the inmate cell areas with I-CON electronic plumbing control systems. The base scope of work is to replace the existing stainless-steel combination fixtures with new, low consumption fixtures and I-CON electronic toilet and lavatory controls. Celled areas with separate fixtures will be receiving I-CON electronic toilet controls and the lavatory valving will remain. A lockout will be installed on celled toilets to reduce plumbing system abuse and ensure water is consumed conservatively. Celled areas with communal showers will receive I-CON electronic shower valves.

- Replace 310 existing stainless-steel combination fixtures with new I-CON low consumption combination fixtures with electronic toilet and lavatory valves in units H though J.
- Retrofit 780 existing toilet flush valves with I-CON electronic flush valves in units A through G.
- Retrofit 224 existing shower valves with I-CON electronic shower valves.
- All I-CON equipment to receive a solid stainless-steel activation button rated for penal use.

The second aspect of the domestic water fixture ECM is replacing the existing high consumption china fixtures with new more efficient systems in dorm and administration areas. Additionally, the faucets will receive new vandal resistant low consumption aerators.

- Replace 82 existing toilets and flush valves with new low consumption fixtures and valves.
- Replace 120 existing faucet aerators with new low consumption, vandal resistant faucet aerators.
- Replace 8 existing showerheads with new low consumption showerheads.

Additional Alternates

Add Alternate #1 (Not in Base Recommended Project Due To No Savings)
Replace 780 unsecure inmate dormitory faucet valves and activation buttons in housing units A through G with new I-CON electronic faucet valves.

Add Alternate #2 (Not in Base Recommended Project Due to No Savings)
Upgrade I-CON controllers which control water fixtures located in the housing cells to communicating and install 10 Envisage computers to control the I-CON equipment. Note that the base solution already includes a lockout installed on celled toilets.

Computer Monitoring and Control System (Envisage) – I-CON offers a customized computer, called Envisage®, which has the ability to access the customizable features of the I-CON plumbing controllers while utilizing a touchscreen computer interface via a Cat5 cable.

Add Alternate #3
(Not in Base Recommended Project but Included in Expanded Project with Avoided Capital Expense.)

Replace 780 existing porcelain toilets in housing units A through G with new low consumption stainless steel penal rated toilets. I-CON valves for these toilets already included in Base Project. **O&M Savings** - Add Alternate #3 includes a material savings by avoiding the estimated annual replacement of 50 porcelain units at $400 per unit.

Project Analysis and Pricing Summary

Water Conservation ECM - Options Table						
	Qty of I-CON Retrofit	Qty of Low Flow	Annual Water Savings (kGal)	Annual Savings (mmBTU)	Annual Savings ($)	Installation Duration (Weeks)
Base Project	1314	210	41,808	4,921	$353,471	32
Add #1	780	-	-	-	-	12
Add #2	10	-	-	-	-	2
Add #3	780	-	2,350	-	-	18

Maintenance Impact
Attic stock will be provided to the facility at the time of substantial completion, per ICS determined quantities, unless prior coordination of material quantities have been approved. The purpose of attic stock is to provide facility personnel instant onsite material to expedite their future repair of defective/end of life parts. This will assist to prevent a shutdown of an area due to delays caused by the procurement of replacement material. The facility is advised to replenish this stock as it is consumed. After substantial completion, the O & M documentation will provide quantities with specific part numbers per the as-built I-CON system. The useful life of water conservation equipment ranges from 10-25 years.

Training
As with any efficient system, an understanding of the operating mechanics is key to continuing the savings for years to come. Upon completion of the water fixture retrofit, the facility personnel and trustees (if applicable) will receive hands-on training of the I-CON system regarding inspection, troubleshooting, and operation. Additionally, general water conservation recommendations will be given based upon the project manager's findings at the facility during the retrofit.

Measurement and Verification
IPMVP Option A will be used for water, sewer, and thermal savings achieved for this ECM.

ECM 6 Central Chilled Water Plant Upgrades

Existing Conditions

Chiller water for comfort cooling at SCI Houtzdale is produced by three (3) 410-ton centrifugal chillers manufactured by Snyder General. This results in a total chiller plant capacity of 1,230 tons. Peak cooling load has been stated to be 780 tons per Bulletin 6. Therefore, one of the three new chillers will rotate out of service and serve as a spare, or for maintenance needs.

The chillers are in the central plant and typically operate six months per year from mid-April to mid-October. The three existing chillers are older units approaching 25 years old and are becoming maintenance intensive due to their age. Additionally, turndown on these units is limited to 4:1, and at 25% load the kW/ton is over 1.0, which is not energy efficient by today's standards.

The chilled water is pumped to the various buildings on campus via an underground chilled water piping network. The chilled water system uses a system of primary (chiller), secondary (from plant) and tertiary pumps (from inside fence). The existing cooling tower fans utilize two-speed fans and constant speed condenser water pumps.

Presently one condenser water pump and one primary chilled water pump are piped to their individual/dedicated cooling tower or chiller. With this existing piping arrangement, if any of the four components fail (chiller, chiller pump, cooling tower or condenser water pump) the chiller and the entire set of four components associated with it becomes unavailable for use. This existing piping arrangement limits flexibility when a piece of equipment is out of service. Future designs should utilize common headers and pumping.

Currently the chilled water plant has no refrigerant leak, alarm, and emergency exhaust system. Upgrades to the chiller plant will require the installation of these systems.

Proposed Solution

TEN proposes to replace the three (3) 410-ton centrifugal chiller with three (3) new 400-ton state of the art magnetic bearing centrifugal chillers which have variable speed compressors. During operational times, one chiller will continue to serve as a spare that can be rotated out for maintenance if needed.

TEN will replace the primary, secondary and tertiary chilled water pumping system with a system that utilized three (3) primary variable chilled water pumps to serve the building needs. Each pump will have variable frequency drive control and one of each set of pumps will serve as a spare, if desired. The piping configurations will also be modified so that any pump can operate with any chiller or cooling tower, allowing maximum flexibility when any piece of equipment is out of service.

The variable frequency drives on every major piece of equipment will allow the Niagara Tridium controls system to operate the chilled water plant in a very energy efficient manner.

Scope:

- Design ECM of Central CHW Plant Upgrades and furnish submittals for approval.
- Replace the three (3) existing chillers with three (3) state of the art centrifugal magnetic bearing chillers. One chiller will serve as a spare.
- Modify the 4160-volt power supplies serving each existing chiller to provide 480-volt power to the chiller VFD compressor drives. Provide a 225-kVA dry-type transformer for each chiller to reduce the voltage to 480V. Locate a new transformer on a separate concrete pad adjacent to each new chiller.

- Remove the seven (7) primary and secondary chilled water pumps and replace them with three (3) new primary variable chilled water pumps with VFDs. The design will have three pumps that utilize only two units at most, and on occasion only one pump during low loads, or during the winter to maintain a flow to minimize freezing potential. Modify the pump electrical sources and associated controls.
- Modify the chilled water piping arrangement in a header configuration so that any chilled water pump can supply any chiller. Replace all chilled water piping within the Central Plant with new welded steel piping and connect to the new outdoor chilled water distribution system being replaced under ECM 4. Insulate plant chilled water piping with 1-1/2" thick insulation.
- Remove the tertiary chilled water pumps, located in the Main Pump Room in Building 5, from service and by-pass those pumps with new piping. Remove the pump electrical supplies and controls.
- Remove the three (3) condenser water pumps and replace them with new condenser water pumps using VFDs. System sizing will be setup to utilize two pumps at a time with the third condenser water pump as a spare. Modify the pump electrical supplies and controls to accommodate the new setup.
- Provide new air separator, expansion tank, make-up water and chemical feed system for the chilled water piping. Chemically treat the entire chilled water system including the exterior distribution system provided under ECM 4. This includes the condenser water system with the treating cooling towers.
- Provide a new basket strainer and the chemical feed system for the cooling towers. Provide a new water quality controller with touch screen, and 55-gallon tanks with metering pumps. Chemically treat the cooling towers and the entire condenser water system. Refill the chemical tanks at final acceptance.
- Control the chillers, cooling towers, and pumps from the Niagara Tridium controls system. Include BACnet connections to each chiller and VFD. Program the system for equipment to operate at their most energy efficient levels.
- Install a refrigerant leak monitor, alarm and emergency exhaust system. Duct the emergency exhaust fan through the outside wall. Extend power and control wiring to the system and equipment. Monitor the refrigerant leak monitor via Niagara Tridium.
- Water balance both the chilled water and condenser water systems.
- Include factory start-up, commissioning, as-built drawings, training, and warranty.

Maintenance Impact

1. The new chilled water plant will significantly reduce the level of maintenance required due to the age and condition of the existing equipment. These newer systems/components should be more dependable.
2. Maintenance on the new emergency exhaust system will be minimal since it will virtually never run, except in the event of a test.

Training

Training will be provided by TEN, installation contractor and by the major equipment suppliers, and by NRG for the controls.

Measurement and Verification

IPMVP Option B provides a comprehensive confirmation of savings achieved for this ECM. Electrical use can be monitored and logged by the chillers and via the BACnet connections to the cooling tower and pump VFDs. These readings can be compared to existing logs. Logs can be saved over time and reviewed from month to month and year to year.

Energy Savings Analysis

SCI Houtzdale	ECM-6
Central Chilled Water Plant Upgrade	

Description	Estimated Annual Consumption	
Existing Chillers - Electricity	2,173,716	kWh
Proposed Chillers - Electricity	1,339,068	kWh

Description	Estimated Annual Energy Savings	
Proposed Savings - Electricity	834,648	kWh

Assumptions

1) Chillers Operate May through September and part of April and October

2) Peak design cooling load is estimated at 700 tons. Normal summer peak

3) Two chillers operate at one time, one is stand-by.

4) 20hp CT fan, 25hp pump, 50hp pump

Additional Option

Cooling Tower Upgrades
(Not in Base Recommended Project Due to Long Payback)
(Included in Expanded Project with Avoided Capital Expense Allocations)

Existing Condition
The three existing cooling towers are also approaching twenty-five (25) years old, which are at the end of their useful lives and require replacement. One of the cooling towers can be rotated out as a spare, and for maintenance reasons if desired.

Proposed Solution
In addition, TEN proposes to replace the three (3) cooling towers with three new cooling towers using VFD's. One cooling tower will serve as a spare, or all three cooling towers can be operated at lower speeds to further increase energy efficiency. Common pipe headers will be provided for both the chilled and condenser water systems that will allow for maximum flexibility between pumps, chillers, and cooling towers.

Additional Scope:

- Replace the existing BAC Series 3000 cooling towers with new BAC Series 3000 cooling towers or similar unit selection using VFD fan control. If possible, reuse the existing structural steel supports. Modify the electrical and controls for the VFDs. Basin heaters are not needed based on the 6-month operating schedule. Clean, prime and epoxy paint the existing steel tower supports for reuse.
- Modify the condenser water piping arrangement in header configurations so any condenser water pump can serve any chiller and any cooling tower. Replace all of the condenser water piping inside and outside of the Central Plant. All piping can be welded steel or HDPE piping, which maybe a better selection if the towers are laid up for 6 months, and the associated corrosion issues in empty steel pipes.

ECM #7 Building Automation System Upgrade

Existing Conditions

SCI Houtzdale is equipped with an extensive Facility-wide Niagara Tridium DDC Building Automation System (BAS) with JACE controllers overlaying existing DX1 and Solo/DX controllers by Auto-Matrix. JACE controllers limits the full capability functions of the original controllers.

Most of the existing DX1 and Solo/DX controllers and sequencing are over 20 years old. A general overview of the current sequences shows that there is an opportunity for improvement however, this opportunity would be limited to available memory on the existing controllers. Replacing the outdated controllers would allow for new sequences which would result in improved function and energy savings.

TEN reviewed the existing DDC system graphics for the facility buildings. The following observations were made after this review:

- The current BAS monitors and/or controls the chiller plant, pumping systems, AHUs, RTUs, H&V units, exhaust fans, VAV boxes, domestic hot water generators, and additional HVAC equipment.
- Facility maintenance personnel currently only have access to BAS via the workstation at the central plant. There is no way to access the BAS inside the fence due to communication issues between the buildings.
- AHUs and RTUs operate 24/7 is no scheduling or temperature setback being utilized.
- During our first site visit for controls the outdoor air temperature was approximately 70^0 F. The chiller plant was operating, and all the AHUs were in a cooling operating mode which fixed the Outside Air (OA) dampers at fifteen (15) percent. The observed discharge air temperatures were consistent with the design values.
- Calculations were performed to verify the OA percentages based on the return and mixed air temperatures. In a number of AHUs, the calculate OA varies from the set point fifteen (15) percent. Sensors need to be check for proper operation.
- During the second site visit outdoor temperatures were lower and AHUs in the same buildings were operating in different modes. Some of the units were attempting to use the economizer cycle, some units were in cooling mode, and other calling for heat. This is an indication that the control sequences need to be reviewed and tested to ensure proper function. Control sequences need to be evaluated to prevent units from operating heating of cooling during economizer operation.
- Variable Air Volume (AHUs) have inlet guide vanes for volume control of the supply and return air fans. Variable Frequency Drives (VFDs) are a more efficient way of varying the supply and return air flow.
- All bathroom, general, and kitchen exhaust fans are constant volume.
- Chillers and cooling towers are monitored by the BAS with the plant operators starting and stopping the chillers based on the cooling load.
- There are no CO2 sensors and demand control ventilation is not being used at the facility.

Proposed Solution

TEN proposes the following measures to enhance and expand the capabilities of the existing BAS system. This will consist of multiple projects. New controls will be installed for new central plant equipment (boilers, chillers, pumps, and meters). The existing DX controllers and fiber-optic cable will be replaced and the BACnet infrastructure will

be extended to individual buildings. Lastly, sequence and operation modifications will be implemented and new VFDs will be installed to generate additional energy savings.

New VFDs will be installed on the seven VAV air handling currently using inlet guide vanes us to generate fan savings. Additional savings will be generated by scheduling AHUs in non-housing areas and implementing discharge air temperature reset.

A more detailed scope of work is provided below.

1. Provide controls & automation required for new boiler plant (ECM-3):

a. Provide automation of two (2) boilers w/in-line pumps and associated secondary pumping systems.
b. Provide an interface to a new steam boilers w/BACnet controls for serving the kitchen and laundry.
c. Provide installation and wiring of master control panel and primary pump interlocks for the boilers. Boilers to be provided with packaged controls, master control panel for lead/lag and staging of the boilers, and BACnet interface.
d. Provide BACnet DDC control panel, controls and control wiring required for the three secondary pumps. New local pressure transmitter will be reset by existing pressure transmitters located in the buildings.

2. Provide controls & automation required for new chilled water plant (ECM-6):

a. Provide automation of the chilled water and condenser water systems, including control of three new chillers, three new cooling towers, and three variable-flow primary pumps.
    i. Control devices include the following. Device wiring and controls by NRG:
        1. Chilled Water Automatic Isolation Valves (3)
        2. Condenser Water Automatic Isolation Valves (3)
        3. Tower Isolation Valves (3)
        4. CHW System Bypass Valve
        5. Chilled Water System Flowmeter
        6. Local Differential Pressure Transmitter
        7. Chillers to be furnished with integral control panel w/BACnet interface for staging/automation and reset control by NRG.
        8. Towers to be furnished with integral VFDs and level controls. NRG to provide condenser water temperature control.

3. Provide metering of chilled water and hot water tonnage, at each building (ECM-4):

a. Provide and install metering of hot water and chilled water tonnage at each building. Note that the fieldhouse (1200sf) and the sally port (300sf) are NOT included. A total of thirty BTU meters shall be provided.
b. Each BTU meter to consist of a dual-turbine insertion flow meter, matched temperature sensors (supply and return), and a wall-mount BTU meter with display, I/O terminals and BACnet port (insertion flowmeter to be installed in the pipe by the MC).
c. Connect the meters into the existing BAS, or the BACnet infrastructure.
d. Provide setup of meters, programming and custom graphics.

4. Eliminate dependence on old-outdated fiber-optic network:

a. The existing BAS infrastructure is based on the original, old fiber-optic cabling installed between the buildings. This fiber is old, and segments are known to be unreliable, and in some instances, have failed.
b. BAS communication infrastructure by providing new fiber optic cabling between the buildings.
c. Provide rigid conduit, and fiberoptic optic cabling between the buildings, to replace existing fiberoptic. Fiber/RS485 media convertors at the buildings will be reused; however, the media convertors will be replaced with 100BASE-TX/100BASE-FX fiber/Ethernet switches.

5. Provide BACnet infrastructure, and extend to individual buildings:

Currently, there are no BACnet; nor LONworks communication capabilities in any of the buildings (except the Central Plant).

a. New Building Control Panels (BCP) will be installed at each building for managing the existing controller networks, while facilitating the use of BACnet and/or LONworks within the buildings.
b. Existing fiber/RS-485 media convertors will be replaced with 100BASE-TX/100BASE- FX fiber/Ethernet switches to facility BACnet IP throughout the complex.
c. CAT-6 cabling to be provided from the new switches to the new BCP panels in each building. BACnet MSTP will be installed in the buildings as required for any new BACnet controls installed under the project. Building Control Panels will support BACnet IP (over fiber) at the network level, BACnet IP & BACnet MSTP at the controller level, and American Auto matrix PUP communications for existing controls.

6. Update front-end software and graphics package from Tridium AX to Tridium N4:

a. Tridium has announced that support for NiagaraAX will expire in 2021; therefore, the front-end software package and graphics will be upgrades to the latest offered by Tridium (currently N4).
b. A new server will be installed at the Central Plant and update of the system databases, server software licenses and graphics to N4.

7. Replace aging & obsolete DX controllers in the buildings, while retaining terminal unit controls:

a. Remove and replace the DX controllers installed within the buildings. The proprietary DX controllers are old and obsolete, and their failures result in excessive down time and emergency repair costs.
b. Controllers will be replaced with BACnet DDC controls and tied into the BAS via the new Building Control Panels. Existing sensors, actuators and field devices will be recommissioned, and reused where possible.
c. Includes replacement of all DX controllers, reprogramming of the controllers, controller validation, and rebuild of the custom graphics on the Tridium Graphical User Interface. DX Controllers currently control AHUs, HVs, DHW Monitoring, Smoke Purge/EVAC, Exhaust Systems and miscellaneous monitoring.
d. In order to tie the new controls into the Tridium BAS, the BACnet Infrastructure Upgrade needs to be implemented.

8. Implement the sequence of operation modifications to optimize performance of the new and existing controls:

a. Reset Strategies, MAT & Economizer, Scheduling
b. Provide return air humidity sensors on forty-four (44) mixed-air-single-path AHUs throughout the facility and wire the sensors into the controls system (existing return air temperature sensors to be reused).
c. Provide enthalpy-based economizer programming in accordance with the TENs sequence of operation.
d. Provide optimal start, and scheduling modifications for AHU-26 through AHU- 38.
e. Provide BACnet network cabling and network switches required to tie the new VFDs into the BAS
f. Provide reset control of AHU parameters based on terminal unit demand (VAV AHUs).
g. Provide reset control of Central Plant parameters based on AHU & terminal equipment demand.
h. Provide database and BAS graphics updates as required.

Maintenance Impact

Implementation of the new BAS equipment and cabling will have a positive impact on facility operation. Obsolete and failing controllers will be replaced resulting in less downtime of equipment. Communications and cabling upgrades will allow facility personnel to access the BAS from more than one location.

The new VFDs will require periodic cleaning of the heat sinks, filter replacement (if equipped), and re-torque at each main lug. The VFD inherent soft start algorithm will extend the life of the motors. New motors are included with the VFD installations.

Training
Training will be provided to address warranty procedures. representatives from the control system manufacturer and will address interface procedures, general interrogation, temporary and permanent adjustments, etc. Training will also cover system components that differ from the configurations now in place throughout the facility. Warranty procedures will also be addressed. TEN will deliver to SCI Houtzdale comprehensive operations and maintenance manuals including an electronic video of the training provided.

Measurement and Verification
IPMVP Option B is well suited to quantifying savings from a particular ECM isolated.

Installation
Components of the building automation system installation may be coordinated and installed within the mechanical scopes of work.

ECM #8 Roof Replacement/Insulation

(Not in Base Recommended Project Due to Long Payback)

Existing Roof Conditions
The existing membrane roofs of the buildings at SCI Houtzdale were all installed as part of the original construction. Therefore, all the membrane roofs are over twenty years old and are no longer covered by a manufacturer's warranty.

During the site visit numerous areas of standing water were noted on each of the roofs surveyed. This is an indication of a failure in the roofing system. As shown in the photo the all the water ponding on the roof is away from the roof drain indicating that this area has steeled below the drain level which should be the lowest point of the roof.

Proposed Solution

TEN recommends the installation of a new fully adhered rubber roofing system over the existing roofs. The new roofing system will include 3.5 inches of ISO insulation, 0.060 E.P.D.M. membrane, flashing, pipe collars, metal coping, s.s. counterflashing, termination bar, fasteners, and adhesives. The new roofing system will come with a twenty-year manufacturer's warranty.

Maintenance Impact
The new roofing system will have the same maintenance requirements as the existing roofs. No new maintenance procedures will be required.

Training
No training will be required for this measure.

Measurement and Verification
IPMVP Option A provides a comprehensive confirmation of savings achieved for this ECM.

ECM #9 Solar Panel Array

(Not in Base Recommended Project Due to Long Payback)

Existing Conditions
All electricity used at the site except for backup generation is purchased from the electric utility. There is currently no solar generation installed at SCI Houtzdale. Open space available at the facility suitable for the installation of a solar array.

Proposed Solution
The installation of a PV solar array will provide onsite generation of renewable electric generation to offset purchased electricity used at the facility.

TEN proposed the installation of a one hundred (100) kW ground mounted photo voltaic solar array. We have identified two areas for the potential installation behind the parking lot of the Visitor's Center.

The ground mounted PV array will be held in place by racks and attached to a ground based mounting system.

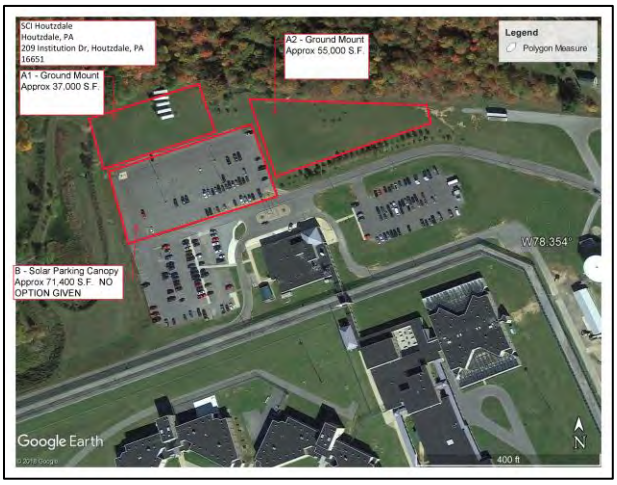

Maintenance Impact
The new PV solar array will require periodic cleaning to maintain the solar generating capacity at the design levels.

Training
Facility maintenance staff will be trained on the proper cleaning procedures for the PV solar panels.

Measurement and Verification
IPMVP Option A provides a comprehensive confirmation of savings achieved for this ECM.

Monitoring and Maintenance

TEN's ongoing monitoring and coordination of maintenance services is led by Nikhil Singh. Nikhil is a certified measurement and verification professional (CMVP) with regard to the industry standard International Performance Measurement & Verification Protocol (IPMVP). IPMVP was first established by the U.S. D.O.E., and has become the internationally recognized protocol for performance measurement and verification (M&V). The IPMVP guidelines provide a consistent, reliable approach to M&V around the world. Our M&V department is further supported and overseen by Greg Lok, TEN's VP, Engineering who also holds CMVP credentials and both regularly report project performance to our president and chief operating officer Rob Campbell.

Nikhil has already been engaged on the SCI Houtzdale project and the initial plan for M&V of proposed ECMs. If selected, Nikhil will be regularly engaging in developing a M&V plan for the project that will be reviewed with DOC to ensure it addresses its expectations. This includes a cost benefit analysis to determine where DOC would like to invest it's M&V budget. For example, it makes the most sense to complete the most robust and potentially more costly M&V approach on the ECMs that generate the largest magnitude of savings. This is described in greater detail on the following pages. We focus on M&V early in the IGA process because the M&V approach taken will dictate the pre-installation data required. If this step is delayed, a client and ESCO may limit their M&V options.

Maintenance

TEN does not require a maintenance agreement in conjunction with its guaranteed energy savings projects. More often, our clients prefer to incorporate the maintenance of their new equipment into their current maintenance routines or existing maintenance contracts with trusted vendors. We pay special attention to select equipment that has proven reliable with good access to parts and repair services in the region. TEN will provide training on all equipment installed under this GESA project. It will be coordinated by our project management team and include members of the TEN, subcontractors and factory representatives. We recommend videotaping this training whenever possible so that it can be included and organized with the project closeout information and available for future reference. All warranty work will be coordinated by our project management team including attic stock which may be provided to expedite repair while any equipment deficiencies are addressed. In instances, where a maintenance agreement is warranted/desired, TEN will coordinate the provision and payment of those services through the GESA project.

Measurement and Verification Approach (Method)

TEN has two Certified Measurement and Verification Professionals (CMVP) on staff to provide a guaranteed savings program based upon sound and proven engineering design principles that 1) isolate the energy efficiency criteria for which TEN is responsible, and 2) specify those other parameters which are beyond the TEN's control.

TEN's M&V is guided by the recommended core concepts and principles of the International Performance Measurement & Verification Protocol (IPMVP), the industry standard for development and implementation of M&V plans in energy savings projects. IPMVP provides four Options for determining savings (A, B, C and D) as summarized in the following table:

IPMVP Option	How Savings Are Calculated	Typical Applications
A. Retrofit Isolation: Key Parameter Measurement Savings are determined by field measurement of the key performance parameter(s) which define the energy use of the ECMs affected system(s) and/or the success of the project.	Engineering calculation of baseline and reporting period energy from: • Short-term or continuous measurements of key operating parameter(s); and • Estimated values.	A lighting retrofit where power draw is the key performance parameter that is measured periodically. Estimate operating hours of the lights based on building schedules and occupant behavior.
B. Retrofit Isolation: All Parameter Measurement Savings are determined by field measurement of the energy use of the ECM-affected system.	Short-term or continuous measurements of baseline and reporting period energy, and/or engineering computations using measurements of proxies of energy use.	Application of a variable speed drive and controls to a motor to adjust fan flow. In the baseline period the power logger is in place for a week to verify constant loading. The meter is in place throughout the reporting period to track variations in power use and count kWh.
C. Whole Facility Savings are determined by measuring energy use at the whole facility or sub-facility level.	Analysis of whole facility baseline and reporting period (utility) meter data. Routine adjustments as required, using techniques such as simple comparison or regression analysis.	Multifaceted energy management program affecting many systems in a facility. Measure energy use with the gas and electric utility meters for a twelve-month baseline period and throughout the reporting period.
D. Calibrated Simulation Savings are determined through simulation of the energy use of the whole facility, or of a sub-facility. Simulation routines are demonstrated to adequately model actual energy performance measured in the facility.	Energy use simulation, calibrated with hourly or monthly utility billing data. Energy end use metering may be used to help refine input data.	Multifaceted energy management program affecting many systems in a facility but where no meter existed in the baseline period. Energy use measurements, after installation of gas and electric meters, are used to calibrate a simulation.

The description below has been used to determine both pre-implementation (Baseline) and post-implementation (Reporting Period) energy use for the average weather year.

Energy Savings = Baseline Energy Use TMY – Reporting Period Energy Use TMY + Adjustments

The "Adjustments" term in this general equation brings energy use in the two-time periods to the same set of conditions. Adjustments can be put into two categories, Routine and Non-Routine. Routine Adjustments are factors that are expected to change such as weather, etc. Non-Routine Adjustments are factors that are not expected such as added equipment, occupancy schedules, large construction projects, change in space use, etc. Adjustments are derived from identifiable physical facts. Adjustments are commonly made to modify the Reporting Period conditions back to the Static Factors of the baseline; in most cases, these corrections are necessary to make a fair comparison. Such adjustment process yields savings, which are often described as "avoided energy use" of the post-retrofit period. The levels of such savings are dependent on post-retrofit period operating conditions. Adjustments may also be made to an agreed fixed set of conditions such as those of the baseline or some other period. The level of savings computed in this situation is unaffected by post-retrofit period conditions but reflects operation under a set of conditions which must be established in advance.

For Measurement and Verification purposes, consideration is given to predictability, measurability and the likely impact of all plausible factors for the following categories –

- Weather variations from TMY
- Occupancy level and schedule of operation
- Installed equipment intensity and schedule
- Change in space through addition or remodeling
- Occupant or user demand for services (e.g., temperature, plant output)
- Appropriate use of the ECM consistent with manufacturer & training guidelines
- Appropriate use of non-ECM equipment impacting ECM performance
- Equipment deterioration, both ECM-related equipment and non-ECM related
- Equipment life, both ECM and non-ECM related

TEN provides a 100% savings guarantee on our projects. Any savings shortfall, is corrected at TEN's expense, or paid directly to the DOC. If TEN is unable to reconcile missed savings during a reconciliation period then TEN will undertake, at its own expense, to bring that measure into compliance with the savings guarantee. If these efforts do not result in savings compliance, then TEN will pay the missed savings amount directly to DOC for each reconciliation period during the term of the contract providing a 100% savings guarantee.

Per the RFQ, TEN has included 3 years of measurement and verification in the cashflow, however we can provide these services for the full project term, if desired.

Proposed Measurement and Verification Plan

Explanation of Guaranteed Savings Measurement and Verification methodology

a. Explanation in terms of dollars, not percentage

TEN proposes to initially meet with DGS representatives to discuss the cost benefit analysis of each measurement and verification option for each measure and then determine the M&V plan. This discussion will include how the measurements will be taken and for how long (option B) or how the utility information will be obtained (option C) to determine the tasks required and the hours needed to perform the agreed upon plan. TEN then will review the plan, scope of work, the personnel that will be performing the work. TEN's team, including Nikhil Singh, and Greg Lok have extensive expertise in developing and performing measurement and verification plans; however, we, in conjunction with DOC/DGS, determine what tasks TEN will perform and the scope. We believe that this approach will not only provide DOC/DGS some control in arriving at M&V cost, but also will reflect the actual cost to perform the work vs. just a percentage of hard costs, since the cost of the project does not always correlate to the complexity and cost to measure and verify the results. At this juncture, we have estimated the annual M&V cost as $22,000.

b. Methodology Compliance with the DGS Design Manual, General Conditions and the IPMVP.

TEN follows the International Performance Measurement & Verification Protocol (IPMVP), the industry standard for development and implementation of M&V plans in energy savings projects. IPMVP provides four Options for determining savings (A, B, C and D). We will additionally review each ECM and M&V approach to ensure compliance with DGS's Design Manual and General Conditions prior to the final M&V selections and cost benefit analysis identified above.

c. Reasonableness and Transparency of the M&V Pricing Methodology

TEN will outline the tasks and time to complete tasks for the final selection of the M&V option for each ECM and apply our disclosed hourly rates, and then review with DOC/DGS. TEN will utilize their automation tools when possible to minimize time and cost of M&V services, if approved by DOC/DGS.

ECM #	ECM	IPMVP Option
1	LED Lighting Upgrade	A
2	Lighting Controls	A
3a	Compressed Natural Gas Conversion	A
3b	Hot Water Boiler Conversion	C / B
4	Replace Burried Hot Water and Chilled Water Piping	C / B
5	Water Conservation	A
6	Central Chilled Water Plant Upgrade	B
7	Building Automation System Upgrade	B
8	Roof Replacement	A
9	Solar Panel Array	A

Appendices:

Savings calculations and equipment cutsheets are placed in the appendices and tabbed with their corresponding ECM number.

Potential Additional ECMs for Consideration

The following potential ECMs were identified during the RFQ and warrant further investigation.

Duct Cleaning

During our facility audit of the building at SCI Houtzdale, we routinely inspected Air Handling Units (AHUs) to check the position and function of outside air and return air dampers. As a result of this process we noted the ductwork would benefit from cleaning. Additionally, the insulation lining the ductwork is breaking down and would benefit from sealing. Dirty ductwork reduces the ability of the AHU coil to transfer the heating or cooling energy to the air stream resulting in excessive run times to meet the heating and cooling loads. Additionally, the added resistance causes an increase in static pressure resulting in increased fan energy.

Proposed Solution

During the proposal stage there was not enough access or information to put together a credible cost estimate together for cleaning the ductwork at this facility. The observed conditions indicated excessive buildup and failing insulation in the return air ducts. The supply ducts were not accessible during the site visits. The extent of the cleaning required will take additional surveying to determine. In general, the heating and cooling coils were clean and air filters were being changed. Ductwork should be cleaned using a HEPA vacuum and include cleaning of the return and exhaust air dampers. The ductwork cleaning scope of work shall include cleaning of the return and exhaust air dampers

Demand Control Ventilation

By design most of the AHUs providing space conditioning at SCI Houtzdale have a high percentage of outside air. All the AHUs serving the housing units are constant volume and provide a fixed amount of outside air regardless of occupancy. AHUs serving the dining areas were designed for 100% outside air. By design the minimum outside air is based on the maximum occupancy. The result is having to condition more ventilation air than required for the space and wasted energy.

Proposed Solution

TEN Evaluated the installation of CO2 sensors in AHUs to implement demand-controlled ventilation based on occupancy. Demand control ventilation alters the amount of outside air based on CO2 levels. As CO2 levels increase the amount of outside air will be increased. The opposite will occur when CO2 levels decrease. This measure is not currently recommended due to observed outside air levels being much lower than the design levels. The lower amounts of outside air reduced the available savings from installation from this measure.

ECM Kitchen Hood Controls

Currently, the design of the kitchen exhaust makeup air is partially provided by transfer air from the dining areas. Due to the interactive nature of the dining areas and the kitchen exhaust air system the air handlers need to be included in the evaluation of variable flow of the kitchen exhaust fans. There was not sufficient information available at this time to perform a creditable analysis. This measure will be reconsidered in the IGA phase.

Savings Calculations

ECM #1 Facility-wide LED Lighting Upgrade - interior fixtures

and

ECM#2 Lighting Controls

SCI Houtzdale (TLED Type C Option)

Line #	Facility Area	Space	Pre Fixture Qty	Pre Watts/ Fixt	Pre Description	Post Fixture Qty	Post Watt/ Fixt	Post Description	Wallswitch Sensor	Ceiling Sensor	Hours of Operation	Base kW	Proposed kW	Base kWh	Proposed kWh
1	ALPHA UNIT COMMON	ENTRY VESTIBULE	1	53	4' Wraparound; Tamper-proof Surface Mounted Fluorescent, (2) 48", T-8 lamp, Instant Start Ballast, NLO (BF: .85-.95) Prismatic Acrylic Diffuser	1	24	Surface Mounted T8 LED Retrofit Lamp with External Driver LED 4' T8 Lamp (2) 12W Lamps			8760	0.05	0.02	466	208
2	ALPHA UNIT COMMON	ALPHA LOBBY	3	266	2'x2' Troffer; Tamper-proof Recessed Metal Halide, (1) 250W lamp Prismatic Acrylic Diffuser	3	49	Recessed Chip On Board (COB) Type Screw-in / Bypass Existing Ballast Light Emitting Diode Lamp, Screw-in, (1) 54W lamp - HIGH			8760	0.80	0.15	6,997	1,277
3	ALPHA UNIT COMMON	ALPHA LOBBY	1	19	Universal Face Exit Sign Surface Mounted EXIT Compact Fluorescent, (2) 7W lamp (No Diffuser)	1	9	Surface Mounted Upgrade EXIT Sign LED Light Fixture. (1) 9W			8760	0.02	0.01	166	78
4	ALPHA UNIT COMMON	MAINTENANCE ROOM	2	53	4' Wraparound; Tamper-proof Surface Mounted Fluorescent, (2) 48", T-8 lamp, Instant Start Ballast, NLO (BF: .85-.95) Prismatic Acrylic Diffuser	2	24	Surface Mounted T8 LED Retrofit Lamp with External Driver LED 4' T8 Lamp (2) 12W Lamps			520	0.11	0.05	55	25
5	ALPHA UNIT COMMON	OFFICE	1	53	4' Wraparound; Tamper-proof Surface Mounted Fluorescent, (2) 48", T-8 lamp, Instant Start Ballast, NLO (BF: .85-.95) Prismatic Acrylic Diffuser	1	24	Surface Mounted T8 LED Retrofit Lamp with External Driver LED 4' T8 Lamp (2) 12W Lamps			3640	0.05	0.02	194	86
6	ALPHA UNIT COMMON	STAFF RESTROOM	1	53	4' Wraparound; Tamper-proof Surface Mounted Fluorescent, (2) 48", T-8 lamp, Instant Start Ballast, NLO (BF: .85-.95) Prismatic Acrylic Diffuser	1	24	Surface Mounted T8 LED Retrofit Lamp with External Driver LED 4' T8 Lamp (2) 12W Lamps			1456	0.05	0.02	78	35
7	ALPHA UNIT COMMON	CUSTODIAL CLOSET	1	53	4' Wraparound; Tamper-proof Surface Mounted Fluorescent, (2) 48", T-8 lamp, Instant Start Ballast, NLO (BF: .85-.95) Prismatic Acrylic Diffuser	1	24	Surface Mounted T8 LED Retrofit Lamp with External Driver LED 4' T8 Lamp (2) 12W Lamps			1456	0.05	0.02	78	35
8	ALPHA UNIT COMMON	STAIRWELL / OPEN OFFICE	3	53	4' Wraparound; Tamper-proof Surface Mounted Fluorescent, (2) 48", T-8 lamp, Instant Start Ballast, NLO (BF: .85-.95) Prismatic Acrylic Diffuser	3	24	Surface Mounted T8 LED Retrofit Lamp with External Driver LED 4' T8 Lamp (2) 12W Lamps			8760	0.16	0.07	1,399	624
9	ALPHA UNIT COMMON	STAIRWELL / OPEN OFFICE	1	3	Universal Face Exit Sign Surface Mounted EXIT Light Emitting Diode, (1) 3W lamp, Single Sided (No Diffuser)	1	3	Existing luminaire to remain as is No Retrofit. To remain as is.			8760	0.00	0.00	25	25
10	ALPHA UNIT COMMON	STAIRWELL / OPEN OFFICE	1	19	Universal Face Exit Sign Surface Mounted EXIT Compact Fluorescent, (2) 7W lamp (No Diffuser)	1	9	Surface Mounted Upgrade EXIT Sign LED Light Fixture. (1) 9W			8760	0.02	0.01	166	78
11	ALPHA UNIT COMMON	OPEN OFFICE	12	80	2'x4' Troffer Recessed Flanged Fluorescent, (3) 48", T-8 lamp, Instant Start Ballast, NLO (BF: .85-.95) Deep Cell Parabolic Diffuser	12	36	Recessed Flanged T8 LED Retrofit Lamp with External Driver LED 4' T8 Lamp (3) 12W Lamps			8760	0.96	0.43	8,444	3,746
12	ALPHA UNIT COMMON	PIPE CHASE	1	53	4' Industrial Surface Mounted Fluorescent, (2) 48", T-8 lamp, Instant Start Ballast, NLO (BF: .85-.95) (No Diffuser)	1	24	Surface Mounted T8 LED Retrofit Lamp with External Driver LED 4' T8 Lamp (2) 12W Lamps			520	0.05	0.02	28	12
13	ALPHA UNIT COMMON	OFFICE	2	80	2'x4' Troffer Recessed Flanged Fluorescent, (3) 48", T-8 lamp, Instant Start Ballast, NLO (BF: .85-.95) Deep Cell Parabolic Diffuser	2	36	Recessed Flanged T8 LED Retrofit Lamp with External Driver LED 4' T8 Lamp (3) 12W Lamps			3640	0.16	0.07	585	259
14	ALPHA UNIT COMMON	OFFICE	4	80	2'x4' Troffer Recessed Flanged Fluorescent, (3) 48", T-8 lamp, Instant Start Ballast, NLO (BF: .85-.95) Prismatic Acrylic Diffuser	4	36	Recessed Flanged T8 LED Retrofit Lamp with External Driver LED 4' T8 Lamp (3) 12W Lamps			3640	0.32	0.14	1,169	519
15	ALPHA UNIT COMMON	OFFICE	2	80	2'x4' Troffer Recessed Flanged Fluorescent, (3) 48", T-8 lamp, Instant Start Ballast, NLO (BF: .85-.95) Prismatic Acrylic Diffuser	2	36	Recessed Flanged T8 LED Retrofit Lamp with External Driver LED 4' T8 Lamp (3) 12W Lamps			3640	0.16	0.07	585	259
16	ALPHA UNIT COMMON	STORAGE ROOM	1	80	2'x4' Troffer Recessed Flanged Fluorescent, (3) 48", T-8 lamp, Instant Start Ballast, NLO (BF: .85-.95) Prismatic Acrylic Diffuser	1	36	Recessed Flanged T8 LED Retrofit Lamp with External Driver LED 4' T8 Lamp (3) 12W Lamps			1560	0.08	0.04	125	56
17	ALPHA UNIT COMMON	PIPE CHASE	1	53	4' Industrial Surface Mounted Fluorescent, (2) 48", T-8 lamp, Instant Start Ballast, NLO (BF: .85-.95) (No Diffuser)	1	24	Surface Mounted T8 LED Retrofit Lamp with External Driver LED 4' T8 Lamp (2) 12W Lamps			520	0.05	0.02	28	12
18	ALPHA UNIT COMMON	BACK STAIRWELL	6	53	4' Wraparound; Tamper-proof Wall Mounted Fluorescent, (2) 48", T-8 lamp, Instant Start Ballast, NLO (BF: .85-.95) Prismatic Acrylic Diffuser	6	24	Wall Mounted T8 LED Retrofit Lamp with External Driver LED 4' T8 Lamp (2) 12W Lamps			8760	0.32	0.14	2,799	1,249
19	ALPHA UNIT COMMON	MECHANICAL ROOM	12	53	4' Industrial Surface Mounted Fluorescent, (2) 48", T-8 lamp, Instant Start Ballast, NLO (BF: .85-.95) (No Diffuser)	12	24	Surface Mounted T8 LED Retrofit Lamp with External Driver LED 4' T8 Lamp (2) 12W Lamps			520	0.64	0.29	332	148
20	ALPHA UNIT COMMON	MECHANICAL ROOM	3	19	Universal Face Exit Sign Surface Mounted EXIT Compact Fluorescent, (2) 7W lamp (No Diffuser)	3	9	Surface Mounted Upgrade EXIT Sign LED Light Fixture. (1) 9W			8760	0.06	0.03	498	234
21	ALPHA UNIT COMMON	EXTERIOR ELECTRICAL ROOM	3	53	4' Industrial Surface Mounted Fluorescent, (2) 48", T-8 lamp, Instant Start Ballast, NLO (BF: .85-.95) (No Diffuser)	3	24	Surface Mounted T8 LED Retrofit Lamp with External Driver LED 4' T8 Lamp (2) 12W Lamps			520	0.16	0.07	83	37
22	ALPHA UNIT COMMON	EXTERIOR SECURITY DATA ROOM	1	53	4' Wraparound; Tamper-proof Surface Mounted Fluorescent, (2) 48", T-8 lamp, Instant Start Ballast, NLO (BF: .85-.95) Prismatic Acrylic Diffuser	1	24	Surface Mounted T8 LED Retrofit Lamp with External Driver LED 4' T8 Lamp (2) 12W Lamps			520	0.05	0.02	28	12
23	ALPHA UNIT ALPHA SIDE	AA DAYROOM	22	266	2'x2' Troffer; Tamper-proof Recessed Metal Halide, (1) 250W lamp Prismatic Acrylic Diffuser	22	49	Recessed Chip On Board (COB) Type Screw-in / Bypass Existing Ballast Light Emitting Diode Lamp, Screw-in, (1) 54W lamp - HIGH			8760	5.86	1.07	51,309	9,366
24	ALPHA UNIT ALPHA SIDE	AA DAYROOM	7	53	4' Corner Vanity; Tamper-proof Wall Mounted Fluorescent, (2) 48", T-8 lamp, Instant Start Ballast, NLO (BF: .85-.95) Prismatic Acrylic Diffuser	7	24	Wall Mounted T8 LED Retrofit Lamp with External Driver LED 4' T8 Lamp (2) 12W Lamps			8760	0.37	0.17	3,265	1,457
25	ALPHA UNIT ALPHA SIDE	AA DAYROOM	1	53	4' Wraparound; Tamper-proof Surface Mounted Fluorescent, (2) 48", T-8 lamp, Instant Start Ballast, NLO (BF: .85-.95) Prismatic Acrylic Diffuser	1	24	Surface Mounted T8 LED Retrofit Lamp with External Driver LED 4' T8 Lamp (2) 12W Lamps			8760	0.05	0.02	466	208
26	ALPHA UNIT ALPHA SIDE	AA DAYROOM	1	53	4' Wraparound; Tamper-proof Wall Mounted Fluorescent, (2) 48", T-8 lamp, Instant Start Ballast, NLO (BF: .85-.95) Prismatic Acrylic Diffuser	1	24	Wall Mounted T8 LED Retrofit Lamp with External Driver LED 4' T8 Lamp (2) 12W Lamps			8760	0.05	0.02	466	208
27	ALPHA UNIT ALPHA SIDE	AA DAYROOM	3	98	8' Vapor Proof Surface Mounted Fluorescent, (2) 96", T-8 lamp, Instant Start Ballast, NLO (BF: .85-.95) Vapor Proof Gasketed Diffuser	3	98	Existing luminaire to remain as is No Retrofit. To remain as is.			0	0.30	0.30	-	-
28	ALPHA UNIT ALPHA SIDE	AA DAYROOM	3	19	Universal Face Exit Sign Surface Mounted EXIT Compact Fluorescent, (2) 7W lamp (No Diffuser)	3	9	Surface Mounted Upgrade EXIT Sign LED Light Fixture. (1) 9W			8760	0.06	0.03	498	234
29	ALPHA UNIT ALPHA SIDE	AA CELLS 1-64	64	80	4' Wraparound; Tamper-proof Surface Mounted Fluorescent, (3) 48", T-8 lamp, Instant Start Ballast, NLO (BF: .85-.95) Prismatic Acrylic Diffuser	64	36	Surface Mounted T8 LED Retrofit Lamp with External Driver LED 4' T8 Lamp (3) 12W Lamps			2912	5.14	2.28	14,970	6,642

Line #	Facility Area	Space	Pre Fixture Qty	Pre Watts/ Fixt	Pre Description	Post Fixture Qty	Post Watt/ Fixt	Post Description	Wallswitch Sensor	Ceiling Sensor	Hours of Operation	Base kW	Proposed kW	Base kWh	Proposed kWh
30	ALPHA UNIT ALPHA SIDE	DORM ONE	4	53	4' Wraparound; Tamper-proof Surface Mounted Fluorescent, (2) 48", T-8 lamp, Instant Start Ballast, NLO (BF: .85-.95) Prismatic Acrylic Diffuser	4	24	Surface Mounted T8 LED Retrofit Lamp with External Driver LED 4' T8 Lamp (2) 12W Lamps			2912	0.21	0.10	620	277
31	ALPHA UNIT ALPHA SIDE	DORM TWO	5	53	4' Wraparound; Tamper-proof Surface Mounted Fluorescent, (2) 48", T-8 lamp, Instant Start Ballast, NLO (BF: .85-.95) Prismatic Acrylic Diffuser	5	24	Surface Mounted T8 LED Retrofit Lamp with External Driver LED 4' T8 Lamp (2) 12W Lamps			2912	0.27	0.12	775	346
32	ALPHA UNIT ALPHA SIDE	STAFF RESTROOM	1	53	4' Wraparound; Tamper-proof Surface Mounted Fluorescent, (2) 48", T-8 lamp, Instant Start Ballast, NLO (BF: .85-.95) Prismatic Acrylic Diffuser	1	24	Surface Mounted T8 LED Retrofit Lamp with External Driver LED 4' T8 Lamp (2) 12W Lamps			1456	0.05	0.02	78	35
33	ALPHA UNIT ALPHA SIDE	LAUNDRY CART ROOM	2	53	4' Wraparound; Tamper-proof Surface Mounted Fluorescent, (2) 48", T-8 lamp, Instant Start Ballast, NLO (BF: .85-.95) Prismatic Acrylic Diffuser	2	24	Surface Mounted T8 LED Retrofit Lamp with External Driver LED 4' T8 Lamp (2) 12W Lamps			1456	0.11	0.05	155	69
34	ALPHA UNIT ALPHA SIDE	CUSTODIAL CLOSET	1	30	2' Wraparound; Tamper-proof Surface Mounted Fluorescent, (2) 24", T-8 lamp, Instant Start Ballast, NLO (BF: .85-.95) Prismatic Acrylic Diffuser	1	16	Surface Mounted T8 LED Retrofit Lamp with External Driver LED 2' T8 Lamp (2) 8W Lamps			1456	0.03	0.02	43	23
35	ALPHA UNIT ALPHA SIDE	CUSTODIAL SUPPLY	3	53	4' Industrial Surface Mounted Fluorescent, (2) 48", T-8 lamp, Instant Start Ballast, NLO (BF: .85-.95) (No Diffuser)	3	24	Surface Mounted T8 LED Retrofit Lamp with External Driver LED 4' T8 Lamp (2) 12W Lamps			1456	0.16	0.07	233	104
36	ALPHA UNIT ALPHA SIDE	PIPE CHASE	1	53	4' Industrial Surface Mounted Fluorescent, (2) 48", T-8 lamp, Instant Start Ballast, NLO (BF: .85-.95) (No Diffuser)	1	24	Surface Mounted T8 LED Retrofit Lamp with External Driver LED 4' T8 Lamp (2) 12W Lamps			200	0.05	0.02	11	5
37	ALPHA UNIT ALPHA SIDE	SHOWERS	8	30	2' Wraparound; Tamper-proof Surface Mounted Fluorescent, (2) 24", T-8 lamp, Instant Start Ballast, NLO (BF: .85-.95) Prismatic Acrylic Diffuser	8	16	Surface Mounted T8 LED Retrofit Lamp with External Driver LED 2' T8 Lamp (2) 8W Lamps			8760	0.24	0.13	2,087	1,110
38	ALPHA UNIT ALPHA SIDE	SHOWERS	3	80	4' Wraparound; Tamper-proof Surface Mounted Fluorescent, (3) 48", T-8 lamp, Instant Start Ballast, NLO (BF: .85-.95) Prismatic Acrylic Diffuser	3	36	Surface Mounted T8 LED Retrofit Lamp with External Driver LED 4' T8 Lamp (3) 12W Lamps			8760	0.24	0.11	2,111	937
39	ALPHA UNIT ALPHA SIDE	UPPER SHOWERS	5	30	2' Wraparound; Tamper-proof Surface Mounted Fluorescent, (2) 24", T-8 lamp, Instant Start Ballast, NLO (BF: .85-.95) Prismatic Acrylic Diffuser	5	16	Surface Mounted T8 LED Retrofit Lamp with External Driver LED 2' T8 Lamp (2) 8W Lamps			8760	0.15	0.08	1,304	694
40	ALPHA UNIT ALPHA SIDE	UPPER SHOWERS	1	53	4' Wraparound; Tamper-proof Surface Mounted Fluorescent, (2) 48", T-8 lamp, Instant Start Ballast, NLO (BF: .85-.95) Prismatic Acrylic Diffuser	1	24	Surface Mounted T8 LED Retrofit Lamp with External Driver LED 4' T8 Lamp (2) 12W Lamps			8760	0.05	0.02	466	208
41	ALPHA UNIT ALPHA SIDE	STORAGE ROOM	1	80	2'x4' Troffer Recessed Fluorescent, (3) 48", T-8 lamp, Instant Start Ballast, NLO (BF: .85-.95) Prismatic Acrylic Diffuser	1	36	Recessed T8 LED Retrofit Lamp with External Driver LED 4' T8 Lamp (3) 12W Lamps			520	0.08	0.04	42	19
42	ALPHA UNIT ALPHA SIDE	STAIRWELL	4	53	4' Wraparound; Tamper-proof Surface Mounted Fluorescent, (2) 48", T-8 lamp, Instant Start Ballast, NLO (BF: .85-.95) Prismatic Acrylic Diffuser	4	24	Surface Mounted T8 LED Retrofit Lamp with External Driver LED 4' T8 Lamp (2) 12W Lamps			8760	0.21	0.10	1,866	833
43	ALPHA UNIT ALPHA SIDE	STAIRWELL	1	19	Universal Face Exit Sign Surface Mounted EXIT Compact Fluorescent, (2) 7W lamp (No Diffuser)	1	9	Surface Mounted Upgrade EXIT Sign LED Light Fixture. (1) 9W			8760	0.02	0.01	166	78
44	ALPHA UNIT BRAVO SIDE	AB DAYROOM	22	266	2'x2' Troffer; Tamper-proof Recessed Metal Halide, (1) 250W lamp Prismatic Acrylic Diffuser	22	49	Recessed Chip On Board (COB) Type Screw-in / Bypass Existing Ballast Light Emitting Diode Lamp, Screw-in, (1) 54W lamp - HIGH			8760	5.86	1.07	51,309	9,366
45	ALPHA UNIT BRAVO SIDE	AB DAYROOM	7	53	4' Corner Vanity; Tamper-proof Wall Mounted Fluorescent, (2) 48", T-8 lamp, Instant Start Ballast, NLO (BF: .85-.95) Prismatic Acrylic Diffuser	7	24	Wall Mounted T8 LED Retrofit Lamp with External Driver LED 4' T8 Lamp (2) 12W Lamps			8760	0.37	0.17	3,265	1,457
46	ALPHA UNIT BRAVO SIDE	AB DAYROOM	1	53	4' Wraparound; Tamper-proof Surface Mounted Fluorescent, (2) 48", T-8 lamp, Instant Start Ballast, NLO (BF: .85-.95) Prismatic Acrylic Diffuser	1	24	Surface Mounted T8 LED Retrofit Lamp with External Driver LED 4' T8 Lamp (2) 12W Lamps			8760	0.05	0.02	466	208
47	ALPHA UNIT BRAVO SIDE	AB DAYROOM	1	53	4' Wraparound; Tamper-proof Wall Mounted Fluorescent, (2) 48", T-8 lamp, Instant Start Ballast, NLO (BF: .85-.95) Prismatic Acrylic Diffuser	1	24	Wall Mounted T8 LED Retrofit Lamp with External Driver LED 4' T8 Lamp (2) 12W Lamps			8760	0.05	0.02	466	208
48	ALPHA UNIT BRAVO SIDE	AB DAYROOM	3	98	8' Vapor Proof Surface Mounted Fluorescent, (2) 96", T-8 lamp, Instant Start Ballast, NLO (BF: .85-.95) Vapor Proof Gasketed Diffuser	3	98	Existing luminaire to remain as is No Retrofit. To remain as is.			0	0.30	0.30	-	-
49	ALPHA UNIT BRAVO SIDE	AB DAYROOM	3	19	Universal Face Exit Sign Surface Mounted EXIT Compact Fluorescent, (2) 7W lamp (No Diffuser)	3	9	Surface Mounted Upgrade EXIT Sign LED Light Fixture. (1) 9W			8760	0.06	0.03	498	234
50	ALPHA UNIT BRAVO SIDE	AB CELLS 1-64	64	80	4' Wraparound; Tamper-proof Surface Mounted Fluorescent, (3) 48", T-8 lamp, Instant Start Ballast, NLO (BF: .85-.95) Prismatic Acrylic Diffuser	64	36	Surface Mounted T8 LED Retrofit Lamp with External Driver LED 4' T8 Lamp (3) 12W Lamps			2912	5.14	2.28	14,970	6,642
51	ALPHA UNIT BRAVO SIDE	DORM ONE	4	53	4' Wraparound; Tamper-proof Surface Mounted Fluorescent, (2) 48", T-8 lamp, Instant Start Ballast, NLO (BF: .85-.95) Prismatic Acrylic Diffuser	4	24	Surface Mounted T8 LED Retrofit Lamp with External Driver LED 4' T8 Lamp (2) 12W Lamps			2912	0.21	0.10	620	277
52	ALPHA UNIT BRAVO SIDE	DORM TWO	5	53	4' Wraparound; Tamper-proof Surface Mounted Fluorescent, (2) 48", T-8 lamp, Instant Start Ballast, NLO (BF: .85-.95) Prismatic Acrylic Diffuser	5	24	Surface Mounted T8 LED Retrofit Lamp with External Driver LED 4' T8 Lamp (2) 12W Lamps			2912	0.27	0.12	775	346
53	ALPHA UNIT BRAVO SIDE	STAFF RESTROOM	1	53	4' Wraparound; Tamper-proof Surface Mounted Fluorescent, (2) 48", T-8 lamp, Instant Start Ballast, NLO (BF: .85-.95) Prismatic Acrylic Diffuser	1	24	Surface Mounted T8 LED Retrofit Lamp with External Driver LED 4' T8 Lamp (2) 12W Lamps			1456	0.05	0.02	78	35
54	ALPHA UNIT BRAVO SIDE	LAUNDRY CART ROOM	2	53	4' Wraparound; Tamper-proof Surface Mounted Fluorescent, (2) 48", T-8 lamp, Instant Start Ballast, NLO (BF: .85-.95) Prismatic Acrylic Diffuser	2	24	Surface Mounted T8 LED Retrofit Lamp with External Driver LED 4' T8 Lamp (2) 12W Lamps			1456	0.11	0.05	155	69
55	ALPHA UNIT BRAVO SIDE	CUSTODIAL CLOSET	1	30	2' Wraparound; Tamper-proof Surface Mounted Fluorescent, (2) 24", T-8 lamp, Instant Start Ballast, NLO (BF: .85-.95) Prismatic Acrylic Diffuser	1	16	Surface Mounted T8 LED Retrofit Lamp with External Driver LED 2' T8 Lamp (2) 8W Lamps			1456	0.03	0.02	43	23
56	ALPHA UNIT BRAVO SIDE	CUSTODIAL SUPPLY	3	53	4' Industrial Surface Mounted Fluorescent, (2) 48", T-8 lamp, Instant Start Ballast, NLO (BF: .85-.95) (No Diffuser)	3	24	Surface Mounted T8 LED Retrofit Lamp with External Driver LED 4' T8 Lamp (2) 12W Lamps			1456	0.16	0.07	233	104
57	ALPHA UNIT BRAVO SIDE	PIPE CHASE	1	53	4' Industrial Surface Mounted Fluorescent, (2) 48", T-8 lamp, Instant Start Ballast, NLO (BF: .85-.95) (No Diffuser)	1	24	Surface Mounted T8 LED Retrofit Lamp with External Driver LED 4' T8 Lamp (2) 12W Lamps			200	0.05	0.02	11	5
58	ALPHA UNIT BRAVO SIDE	SHOWERS	8	30	2' Wraparound; Tamper-proof Surface Mounted Fluorescent, (2) 24", T-8 lamp, Instant Start Ballast, NLO (BF: .85-.95) Prismatic Acrylic Diffuser	8	16	Surface Mounted T8 LED Retrofit Lamp with External Driver LED 2' T8 Lamp (2) 8W Lamps			8760	0.24	0.13	2,087	1,110
59	ALPHA UNIT BRAVO SIDE	SHOWERS	3	80	4' Wraparound; Tamper-proof Surface Mounted Fluorescent, (3) 48", T-8 lamp, Instant Start Ballast, NLO (BF: .85-.95) Prismatic Acrylic Diffuser	3	36	Surface Mounted T8 LED Retrofit Lamp with External Driver LED 4' T8 Lamp (3) 12W Lamps			8760	0.24	0.11	2,111	937

Line #	Facility Area	Space	Pre Fixture Qty	Pre Watts/ Fixt	Pre Description	Post Fixture Qty	Post Watt/ Fixt	Post Description	Wallswitch Sensor	Ceiling Sensor	Hours of Operation	Base kW	Proposed kW	Base kWh	Proposed kWh
60	ALPHA UNIT BRAVO SIDE	UPPER SHOWERS	5	30	2' Wraparound; Tamper-proof Surface Mounted Fluorescent, (2) 24", T-8 lamp, Instant Start Ballast, NLO (BF: .85-.95) Prismatic Acrylic Diffuser	5	16	Surface Mounted T8 LED Retrofit Lamp with External Driver LED 2' T8 Lamp (2) 8W Lamps			8760	0.15	0.08	1,304	694
61	ALPHA UNIT BRAVO SIDE	UPPER SHOWERS	1	53	4' Wraparound; Tamper-proof Surface Mounted Fluorescent, (2) 48", T-8 lamp, Instant Start Ballast, NLO (BF: .85-.95) Prismatic Acrylic Diffuser	1	24	Surface Mounted T8 LED Retrofit Lamp with External Driver LED 4' T8 Lamp (2) 12W Lamps			8760	0.05	0.02	466	208
62	ALPHA UNIT BRAVO SIDE	STORAGE ROOM	1	80	2'x4' Troffer Recessed Fluorescent, (3) 48", T-8 lamp, Instant Start Ballast, NLO (BF: .85-.95) Prismatic Acrylic Diffuser	1	36	Recessed T8 LED Retrofit Lamp with External Driver LED 4' T8 Lamp (3) 12W Lamps			520	0.08	0.04	42	19
63	ALPHA UNIT BRAVO SIDE	STAIRWELL	4	53	4' Wraparound; Tamper-proof Surface Mounted Fluorescent, (2) 48", T-8 lamp, Instant Start Ballast, NLO (BF: .85-.95) Prismatic Acrylic Diffuser	4	24	Surface Mounted T8 LED Retrofit Lamp with External Driver LED 4' T8 Lamp (2) 12W Lamps			8760	0.21	0.10	1,866	833
64	ALPHA UNIT BRAVO SIDE	STAIRWELL	1	19	Universal Face Exit Sign Surface Mounted EXIT Compact Fluorescent, (2) 7W lamp (No Diffuser)	1	9	Surface Mounted Upgrade EXIT Sign LED Light Fixture. (1) 9W			8760	0.02	0.01	166	78
65	BRAVO UNIT COMMON	ENTRY VESTIBULE	1	53	4' Wraparound; Tamper-proof Surface Mounted Fluorescent, (2) 48", T-8 lamp, Instant Start Ballast, NLO (BF: .85-.95) Prismatic Acrylic Diffuser	1	24	Surface Mounted T8 LED Retrofit Lamp with External Driver LED 4' T8 Lamp (2) 12W Lamps			8760	0.05	0.02	466	208
66	BRAVO UNIT COMMON	ALPHA LOBBY	3	266	2'x2' Troffer; Tamper-proof Recessed Metal Halide, (1) 250W lamp Prismatic Acrylic Diffuser	3	49	Recessed Chip On Board (COB) Type Screw-in / Bypass Existing Ballast Light Emitting Diode Lamp, Screw-in, (1) 54W lamp - HIGH			8760	0.80	0.15	6,997	1,277
67	BRAVO UNIT COMMON	ALPHA LOBBY	1	19	Universal Face Exit Sign Surface Mounted EXIT Compact Fluorescent, (2) 7W lamp (No Diffuser)	1	9	Surface Mounted Upgrade EXIT Sign LED Light Fixture. (1) 9W			8760	0.02	0.01	166	78
68	BRAVO UNIT COMMON	MAINTENANCE ROOM	2	53	4' Wraparound; Tamper-proof Surface Mounted Fluorescent, (2) 48", T-8 lamp, Instant Start Ballast, NLO (BF: .85-.95) Prismatic Acrylic Diffuser	2	24	Surface Mounted T8 LED Retrofit Lamp with External Driver LED 4' T8 Lamp (2) 12W Lamps			520	0.11	0.05	55	25
69	BRAVO UNIT COMMON	OFFICE	1	53	4' Wraparound; Tamper-proof Surface Mounted Fluorescent, (2) 48", T-8 lamp, Instant Start Ballast, NLO (BF: .85-.95) Prismatic Acrylic Diffuser	1	24	Surface Mounted T8 LED Retrofit Lamp with External Driver LED 4' T8 Lamp (2) 12W Lamps			3640	0.05	0.02	194	86
70	BRAVO UNIT COMMON	STAFF RESTROOM	1	53	4' Wraparound; Tamper-proof Surface Mounted Fluorescent, (2) 48", T-8 lamp, Instant Start Ballast, NLO (BF: .85-.95) Prismatic Acrylic Diffuser	1	24	Surface Mounted T8 LED Retrofit Lamp with External Driver LED 4' T8 Lamp (2) 12W Lamps			1456	0.05	0.02	78	35
71	BRAVO UNIT COMMON	CUSTODIAL CLOSET	1	53	4' Wraparound; Tamper-proof Surface Mounted Fluorescent, (2) 48", T-8 lamp, Instant Start Ballast, NLO (BF: .85-.95) Prismatic Acrylic Diffuser	1	24	Surface Mounted T8 LED Retrofit Lamp with External Driver LED 4' T8 Lamp (2) 12W Lamps			1456	0.05	0.02	78	35
72	BRAVO UNIT COMMON	STAIRWELL / OPEN OFFICE	3	53	4' Wraparound; Tamper-proof Surface Mounted Fluorescent, (2) 48", T-8 lamp, Instant Start Ballast, NLO (BF: .85-.95) Prismatic Acrylic Diffuser	3	24	Surface Mounted T8 LED Retrofit Lamp with External Driver LED 4' T8 Lamp (2) 12W Lamps			8760	0.16	0.07	1,399	624
73	BRAVO UNIT COMMON	STAIRWELL / OPEN OFFICE	1	3	Universal Face Exit Sign Surface Mounted EXIT Light Emitting Diode, (1) 3W lamp, Single Sided (No Diffuser)	1	3	Existing luminaire to remain as is No Retrofit. To remain as is.			8760	0.00	0.00	25	25
74	BRAVO UNIT COMMON	STAIRWELL / OPEN OFFICE	1	19	Universal Face Exit Sign Surface Mounted EXIT Compact Fluorescent, (2) 7W lamp (No Diffuser)	1	9	Surface Mounted Upgrade EXIT Sign LED Light Fixture. (1) 9W			8760	0.02	0.01	166	78
75	BRAVO UNIT COMMON	OPEN OFFICE	12	80	2'x4' Troffer Recessed Flanged Fluorescent, (3) 48", T-8 lamp, Instant Start Ballast, NLO (BF: .85-.95) Deep Cell Parabolic Diffuser	12	36	Recessed Flanged T8 LED Retrofit Lamp with External Driver LED 4' T8 Lamp (3) 12W Lamps			8760	0.96	0.43	8,444	3,746
76	BRAVO UNIT COMMON	PIPE CHASE	1	53	4' Industrial Surface Mounted Fluorescent, (2) 48", T-8 lamp, Instant Start Ballast, NLO (BF: .85-.95) (No Diffuser)	1	24	Surface Mounted T8 LED Retrofit Lamp with External Driver LED 4' T8 Lamp (2) 12W Lamps			520	0.05	0.02	28	12
77	BRAVO UNIT COMMON	OFFICE	2	80	2'x4' Troffer Recessed Flanged Fluorescent, (3) 48", T-8 lamp, Instant Start Ballast, NLO (BF: .85-.95) Deep Cell Parabolic Diffuser	2	36	Recessed Flanged T8 LED Retrofit Lamp with External Driver LED 4' T8 Lamp (3) 12W Lamps			3640	0.16	0.07	585	259
78	BRAVO UNIT COMMON	OFFICE	4	80	2'x4' Troffer Recessed Flanged Fluorescent, (3) 48", T-8 lamp, Instant Start Ballast, NLO (BF: .85-.95) Prismatic Acrylic Diffuser	4	36	Recessed Flanged T8 LED Retrofit Lamp with External Driver LED 4' T8 Lamp (3) 12W Lamps			3640	0.32	0.14	1,169	519
79	BRAVO UNIT COMMON	OFFICE	2	80	2'x4' Troffer Recessed Flanged Fluorescent, (3) 48", T-8 lamp, Instant Start Ballast, NLO (BF: .85-.95) Prismatic Acrylic Diffuser	2	36	Recessed Flanged T8 LED Retrofit Lamp with External Driver LED 4' T8 Lamp (3) 12W Lamps			3640	0.16	0.07	585	259
80	BRAVO UNIT COMMON	STORAGE ROOM	1	80	2'x4' Troffer Recessed Flanged Fluorescent, (3) 48", T-8 lamp, Instant Start Ballast, NLO (BF: .85-.95) Prismatic Acrylic Diffuser	1	36	Recessed Flanged T8 LED Retrofit Lamp with External Driver LED 4' T8 Lamp (3) 12W Lamps			1560	0.08	0.04	125	56
81	BRAVO UNIT COMMON	PIPE CHASE	1	53	4' Industrial Surface Mounted Fluorescent, (2) 48", T-8 lamp, Instant Start Ballast, NLO (BF: .85-.95) (No Diffuser)	1	24	Surface Mounted T8 LED Retrofit Lamp with External Driver LED 4' T8 Lamp (2) 12W Lamps			520	0.05	0.02	28	12
82	BRAVO UNIT COMMON	BACK STAIRWELL	6	53	4' Wraparound; Tamper-proof Wall Mounted Fluorescent, (2) 48", T-8 lamp, Instant Start Ballast, NLO (BF: .85-.95) Prismatic Acrylic Diffuser	6	24	Wall Mounted T8 LED Retrofit Lamp with External Driver LED 4' T8 Lamp (2) 12W Lamps			8760	0.32	0.14	2,799	1,249
83	BRAVO UNIT COMMON	MECHANICAL ROOM	12	53	4' Industrial Surface Mounted Fluorescent, (2) 48", T-8 lamp, Instant Start Ballast, NLO (BF: .85-.95) (No Diffuser)	12	24	Surface Mounted T8 LED Retrofit Lamp with External Driver LED 4' T8 Lamp (2) 12W Lamps			520	0.64	0.29	332	148
84	BRAVO UNIT COMMON	MECHANICAL ROOM	3	19	Universal Face Exit Sign Surface Mounted EXIT Compact Fluorescent, (2) 7W lamp (No Diffuser)	3	9	Surface Mounted Upgrade EXIT Sign LED Light Fixture. (1) 9W			8760	0.06	0.03	498	234
85	BRAVO UNIT COMMON	EXTERIOR ELECTRICAL ROOM	3	53	4' Industrial Surface Mounted Fluorescent, (2) 48", T-8 lamp, Instant Start Ballast, NLO (BF: .85-.95) (No Diffuser)	3	24	Surface Mounted T8 LED Retrofit Lamp with External Driver LED 4' T8 Lamp (2) 12W Lamps			520	0.16	0.07	83	37
86	BRAVO UNIT COMMON	EXTERIOR SECURITY DATA ROOM	1	53	4' Wraparound; Tamper-proof Surface Mounted Fluorescent, (2) 48", T-8 lamp, Instant Start Ballast, NLO (BF: .85-.95) Prismatic Acrylic Diffuser	1	24	Surface Mounted T8 LED Retrofit Lamp with External Driver LED 4' T8 Lamp (2) 12W Lamps			520	0.05	0.02	28	12
87	BRAVO UNIT ALPHA SIDE	BA DAYROOM	22	266	2'x2' Troffer; Tamper-proof Recessed Metal Halide, (1) 250W lamp Prismatic Acrylic Diffuser	22	49	Recessed Chip On Board (COB) Type Screw-in / Bypass Existing Ballast Light Emitting Diode Lamp, Screw-in, (1) 54W lamp - HIGH			8760	5.86	1.07	51,309	9,366
88	BRAVO UNIT ALPHA SIDE	BA DAYROOM	7	53	4' Corner Vanity; Tamper-proof Wall Mounted Fluorescent, (2) 48", T-8 lamp, Instant Start Ballast, NLO (BF: .85-.95) Prismatic Acrylic Diffuser	7	24	Wall Mounted T8 LED Retrofit Lamp with External Driver LED 4' T8 Lamp (2) 12W Lamps			8760	0.37	0.17	3,265	1,457
89	BRAVO UNIT ALPHA SIDE	BA DAYROOM	1	53	4' Wraparound; Tamper-proof Surface Mounted Fluorescent, (2) 48", T-8 lamp, Instant Start Ballast, NLO (BF: .85-.95) Prismatic Acrylic Diffuser	1	24	Surface Mounted T8 LED Retrofit Lamp with External Driver LED 4' T8 Lamp (2) 12W Lamps			8760	0.05	0.02	466	208

Line #	Facility Area	Space	Pre Fixture Qty	Pre Watts/ Fixt	Pre Description	Post Fixture Qty	Post Watt/ Fixt	Post Description	Wallswitch Sensor	Ceiling Sensor	Hours of Operation	Base kW	Proposed kW	Base kWh	Proposed kWh
90	BRAVO UNIT ALPHA SIDE	BA DAYROOM	1	53	4' Wraparound; Tamper-proof Wall Mounted Fluorescent, (2) 48", T-8 lamp, Instant Start Ballast, NLO (BF: .85-.95) Prismatic Acrylic Diffuser	1	24	Wall Mounted T8 LED Retrofit Lamp with External Driver LED 4' T8 Lamp (2) 12W Lamps			8760	0.05	0.02	466	208
91	BRAVO UNIT ALPHA SIDE	BA DAYROOM	3	98	8' Vapor Proof Surface Mounted Fluorescent, (2) 96", T-8 lamp, Instant Start Ballast, NLO (BF: .85-.95) Vapor Proof Gasketed Diffuser	3	98	Existing luminaire to remain as is No Retrofit. To remain as is.			0	0.30	0.30	-	-
92	BRAVO UNIT ALPHA SIDE	BA DAYROOM	3	19	Universal Face Exit Sign Surface Mounted EXIT Compact Fluorescent, (2) 7W lamp (No Diffuser)	3	9	Surface Mounted Upgrade EXIT Sign LED Light Fixture. (1) 9W			8760	0.06	0.03	498	234
93	BRAVO UNIT ALPHA SIDE	BA CELLS 1-64	64	80	4' Wraparound; Tamper-proof Surface Mounted Fluorescent, (3) 48", T-8 lamp, Instant Start Ballast, NLO (BF: .85-.95) Prismatic Acrylic Diffuser	64	36	Surface Mounted T8 LED Retrofit Lamp with External Driver LED 4' T8 Lamp (3) 12W Lamps			2912	5.14	2.28	14,970	6,642
94	BRAVO UNIT ALPHA SIDE	DORM ONE	4	53	4' Wraparound; Tamper-proof Surface Mounted Fluorescent, (2) 48", T-8 lamp, Instant Start Ballast, NLO (BF: .85-.95) Prismatic Acrylic Diffuser	4	24	Surface Mounted T8 LED Retrofit Lamp with External Driver LED 4' T8 Lamp (2) 12W Lamps			2912	0.21	0.10	620	277
95	BRAVO UNIT ALPHA SIDE	DORM TWO	5	53	4' Wraparound; Tamper-proof Surface Mounted Fluorescent, (2) 48", T-8 lamp, Instant Start Ballast, NLO (BF: .85-.95) Prismatic Acrylic Diffuser	5	24	Surface Mounted T8 LED Retrofit Lamp with External Driver LED 4' T8 Lamp (2) 12W Lamps			2912	0.27	0.12	775	346
96	BRAVO UNIT ALPHA SIDE	STAFF RESTROOM	1	53	4' Wraparound; Tamper-proof Surface Mounted Fluorescent, (2) 48", T-8 lamp, Instant Start Ballast, NLO (BF: .85-.95) Prismatic Acrylic Diffuser	1	24	Surface Mounted T8 LED Retrofit Lamp with External Driver LED 4' T8 Lamp (2) 12W Lamps			1456	0.05	0.02	78	35
97	BRAVO UNIT ALPHA SIDE	LAUNDRY CART ROOM	2	53	4' Wraparound; Tamper-proof Surface Mounted Fluorescent, (2) 48", T-8 lamp, Instant Start Ballast, NLO (BF: .85-.95) Prismatic Acrylic Diffuser	2	24	Surface Mounted T8 LED Retrofit Lamp with External Driver LED 4' T8 Lamp (2) 12W Lamps			1456	0.11	0.05	155	69
98	BRAVO UNIT ALPHA SIDE	CUSTODIAL CLOSET	1	30	2' Wraparound; Tamper-proof Surface Mounted Fluorescent, (2) 24", T-8 lamp, Instant Start Ballast, NLO (BF: .85-.95) Prismatic Acrylic Diffuser	1	16	Surface Mounted T8 LED Retrofit Lamp with External Driver LED 2' T8 Lamp (2) 8W Lamps			1456	0.03	0.02	43	23
99	BRAVO UNIT ALPHA SIDE	CUSTODIAL SUPPLY	3	53	4' Industrial Surface Mounted Fluorescent, (2) 48", T-8 lamp, Instant Start Ballast, NLO (BF: .85-.95) (No Diffuser)	3	24	Surface Mounted T8 LED Retrofit Lamp with External Driver LED 4' T8 Lamp (2) 12W Lamps			1456	0.16	0.07	233	104
100	BRAVO UNIT ALPHA SIDE	PIPE CHASE	1	53	4' Industrial Surface Mounted Fluorescent, (2) 48", T-8 lamp, Instant Start Ballast, NLO (BF: .85-.95) (No Diffuser)	1	24	Surface Mounted T8 LED Retrofit Lamp with External Driver LED 4' T8 Lamp (2) 12W Lamps			200	0.05	0.02	11	5
101	BRAVO UNIT ALPHA SIDE	SHOWERS	8	30	2' Wraparound; Tamper-proof Surface Mounted Fluorescent, (2) 24", T-8 lamp, Instant Start Ballast, NLO (BF: .85-.95) Prismatic Acrylic Diffuser	8	16	Surface Mounted T8 LED Retrofit Lamp with External Driver LED 2' T8 Lamp (2) 8W Lamps			8760	0.24	0.13	2,087	1,110
102	BRAVO UNIT ALPHA SIDE	SHOWERS	3	80	4' Wraparound; Tamper-proof Surface Mounted Fluorescent, (3) 48", T-8 lamp, Instant Start Ballast, NLO (BF: .85-.95) Prismatic Acrylic Diffuser	3	36	Surface Mounted T8 LED Retrofit Lamp with External Driver LED 4' T8 Lamp (3) 12W Lamps			8760	0.24	0.11	2,111	937
103	BRAVO UNIT ALPHA SIDE	UPPER SHOWERS	5	30	2' Wraparound; Tamper-proof Surface Mounted Fluorescent, (2) 24", T-8 lamp, Instant Start Ballast, NLO (BF: .85-.95) Prismatic Acrylic Diffuser	5	16	Surface Mounted T8 LED Retrofit Lamp with External Driver LED 2' T8 Lamp (2) 8W Lamps			8760	0.15	0.08	1,304	694
104	BRAVO UNIT ALPHA SIDE	UPPER SHOWERS	1	53	4' Wraparound; Tamper-proof Surface Mounted Fluorescent, (2) 48", T-8 lamp, Instant Start Ballast, NLO (BF: .85-.95) Prismatic Acrylic Diffuser	1	24	Surface Mounted T8 LED Retrofit Lamp with External Driver LED 4' T8 Lamp (2) 12W Lamps			8760	0.05	0.02	466	208
105	BRAVO UNIT ALPHA SIDE	STORAGE ROOM	1	80	2'x4' Troffer Recessed Fluorescent, (3) 48", T-8 lamp, Instant Start Ballast, NLO (BF: .85-.95) Prismatic Acrylic Diffuser	1	36	Recessed T8 LED Retrofit Lamp with External Driver LED 4' T8 Lamp (3) 12W Lamps			520	0.08	0.04	42	19
106	BRAVO UNIT ALPHA SIDE	STAIRWELL	4	53	4' Wraparound; Tamper-proof Surface Mounted Fluorescent, (2) 48", T-8 lamp, Instant Start Ballast, NLO (BF: .85-.95) Prismatic Acrylic Diffuser	4	24	Surface Mounted T8 LED Retrofit Lamp with External Driver LED 4' T8 Lamp (2) 12W Lamps			8760	0.21	0.10	1,866	833
107	BRAVO UNIT ALPHA SIDE	STAIRWELL	1	19	Universal Face Exit Sign Surface Mounted EXIT Compact Fluorescent, (2) 7W lamp (No Diffuser)	1	9	Surface Mounted Upgrade EXIT Sign LED Light Fixture. (1) 9W			8760	0.02	0.01	166	78
108	BRAVO UNIT BRAVO SIDE	BB DAYROOM	22	266	2'x2' Troffer; Tamper-proof Recessed Metal Halide, (1) 250W lamp Prismatic Acrylic Diffuser	22	49	Recessed Chip On Board (COB) Type Screw-in / Bypass Existing Ballast Light Emitting Diode Lamp, Screw-in, (1) 54W lamp - HIGH			8760	5.86	1.07	51,309	9,366
109	BRAVO UNIT BRAVO SIDE	BB DAYROOM	7	53	4' Corner Vanity; Tamper-proof Wall Mounted Fluorescent, (2) 48", T-8 lamp, Instant Start Ballast, NLO (BF: .85-.95) Prismatic Acrylic Diffuser	7	24	Wall Mounted T8 LED Retrofit Lamp with External Driver LED 4' T8 Lamp (2) 12W Lamps			8760	0.37	0.17	3,265	1,457
110	BRAVO UNIT BRAVO SIDE	BB DAYROOM	1	53	4' Wraparound; Tamper-proof Surface Mounted Fluorescent, (2) 48", T-8 lamp, Instant Start Ballast, NLO (BF: .85-.95) Prismatic Acrylic Diffuser	1	24	Surface Mounted T8 LED Retrofit Lamp with External Driver LED 4' T8 Lamp (2) 12W Lamps			8760	0.05	0.02	466	208
111	BRAVO UNIT BRAVO SIDE	BB DAYROOM	1	53	4' Wraparound; Tamper-proof Wall Mounted Fluorescent, (2) 48", T-8 lamp, Instant Start Ballast, NLO (BF: .85-.95) Prismatic Acrylic Diffuser	1	24	Wall Mounted T8 LED Retrofit Lamp with External Driver LED 4' T8 Lamp (2) 12W Lamps			8760	0.05	0.02	466	208
112	BRAVO UNIT BRAVO SIDE	BB DAYROOM	3	98	8' Vapor Proof Surface Mounted Fluorescent, (2) 96", T-8 lamp, Instant Start Ballast, NLO (BF: .85-.95) Vapor Proof Gasketed Diffuser	3	98	Existing luminaire to remain as is No Retrofit. To remain as is.			0	0.30	0.30	-	-
113	BRAVO UNIT BRAVO SIDE	BB DAYROOM	3	19	Universal Face Exit Sign Surface Mounted EXIT Compact Fluorescent, (2) 7W lamp (No Diffuser)	3	9	Surface Mounted Upgrade EXIT Sign LED Light Fixture. (1) 9W			8760	0.06	0.03	498	234
114	BRAVO UNIT BRAVO SIDE	BB CELLS 1-64	64	80	4' Wraparound; Tamper-proof Surface Mounted Fluorescent, (3) 48", T-8 lamp, Instant Start Ballast, NLO (BF: .85-.95) Prismatic Acrylic Diffuser	64	36	Surface Mounted T8 LED Retrofit Lamp with External Driver LED 4' T8 Lamp (3) 12W Lamps			2912	5.14	2.28	14,970	6,642
115	BRAVO UNIT BRAVO SIDE	DORM ONE	4	53	4' Wraparound; Tamper-proof Surface Mounted Fluorescent, (2) 48", T-8 lamp, Instant Start Ballast, NLO (BF: .85-.95) Prismatic Acrylic Diffuser	4	24	Surface Mounted T8 LED Retrofit Lamp with External Driver LED 4' T8 Lamp (2) 12W Lamps			2912	0.21	0.10	620	277
116	BRAVO UNIT BRAVO SIDE	DORM TWO	5	53	4' Wraparound; Tamper-proof Surface Mounted Fluorescent, (2) 48", T-8 lamp, Instant Start Ballast, NLO (BF: .85-.95) Prismatic Acrylic Diffuser	5	24	Surface Mounted T8 LED Retrofit Lamp with External Driver LED 4' T8 Lamp (2) 12W Lamps			2912	0.27	0.12	775	346
117	BRAVO UNIT BRAVO SIDE	STAFF RESTROOM	1	53	4' Wraparound; Tamper-proof Surface Mounted Fluorescent, (2) 48", T-8 lamp, Instant Start Ballast, NLO (BF: .85-.95) Prismatic Acrylic Diffuser	1	24	Surface Mounted T8 LED Retrofit Lamp with External Driver LED 4' T8 Lamp (2) 12W Lamps			1456	0.05	0.02	78	35
118	BRAVO UNIT BRAVO SIDE	LAUNDRY CART ROOM	2	53	4' Wraparound; Tamper-proof Surface Mounted Fluorescent, (2) 48", T-8 lamp, Instant Start Ballast, NLO (BF: .85-.95) Prismatic Acrylic Diffuser	2	24	Surface Mounted T8 LED Retrofit Lamp with External Driver LED 4' T8 Lamp (2) 12W Lamps			1456	0.11	0.05	155	69
119	BRAVO UNIT BRAVO SIDE	CUSTODIAL CLOSET	1	30	2' Wraparound; Tamper-proof Surface Mounted Fluorescent, (2) 24", T-8 lamp, Instant Start Ballast, NLO (BF: .85-.95) Prismatic Acrylic Diffuser	1	16	Surface Mounted T8 LED Retrofit Lamp with External Driver LED 2' T8 Lamp (2) 8W Lamps			1456	0.03	0.02	43	23

Line #	Facility Area	Space	Pre Fixture Qty	Pre Watts/ Fixt	Pre Description	Post Fixture Qty	Post Watt/ Fixt	Post Description	Wallswitch Sensor	Ceiling Sensor	Hours of Operation	Base kW	Proposed kW	Base kWh	Proposed kWh
120	BRAVO UNIT BRAVO SIDE	CUSTODIAL SUPPLY	3	53	4' Industrial Surface Mounted Fluorescent, (2) 48", T-8 lamp, Instant Start Ballast, NLO (BF: .85-.95) (No Diffuser)	3	24	Surface Mounted T8 LED Retrofit Lamp with External Driver LED 4' T8 Lamp (2) 12W Lamps			1456	0.16	0.07	233	104
121	BRAVO UNIT BRAVO SIDE	PIPE CHASE	1	53	4' Industrial Surface Mounted Fluorescent, (2) 48", T-8 lamp, Instant Start Ballast, NLO (BF: .85-.95) (No Diffuser)	1	24	Surface Mounted T8 LED Retrofit Lamp with External Driver LED 4' T8 Lamp (2) 12W Lamps			200	0.05	0.02	11	5
122	BRAVO UNIT BRAVO SIDE	SHOWERS	8	30	2' Wraparound; Tamper-proof Surface Mounted Fluorescent, (2) 24", T-8 lamp, Instant Start Ballast, NLO (BF: .85-.95) Prismatic Acrylic Diffuser	8	16	Surface Mounted T8 LED Retrofit Lamp with External Driver LED 2' T8 Lamp (2) 8W Lamps			8760	0.24	0.13	2,087	1,110
123	BRAVO UNIT BRAVO SIDE	SHOWERS	3	80	4' Wraparound; Tamper-proof Surface Mounted Fluorescent, (3) 48", T-8 lamp, Instant Start Ballast, NLO (BF: .85-.95) Prismatic Acrylic Diffuser	3	36	Surface Mounted T8 LED Retrofit Lamp with External Driver LED 4' T8 Lamp (3) 12W Lamps			8760	0.24	0.11	2,111	937
124	BRAVO UNIT BRAVO SIDE	UPPER SHOWERS	5	30	2' Wraparound; Tamper-proof Surface Mounted Fluorescent, (2) 24", T-8 lamp, Instant Start Ballast, NLO (BF: .85-.95) Prismatic Acrylic Diffuser	5	16	Surface Mounted T8 LED Retrofit Lamp with External Driver LED 2' T8 Lamp (2) 8W Lamps			8760	0.15	0.08	1,304	694
125	BRAVO UNIT BRAVO SIDE	UPPER SHOWERS	1	53	4' Wraparound; Tamper-proof Surface Mounted Fluorescent, (2) 48", T-8 lamp, Instant Start Ballast, NLO (BF: .85-.95) Prismatic Acrylic Diffuser	1	24	Surface Mounted T8 LED Retrofit Lamp with External Driver LED 4' T8 Lamp (2) 12W Lamps			8760	0.05	0.02	466	208
126	BRAVO UNIT BRAVO SIDE	STORAGE ROOM	1	80	2'x4' Troffer Recessed Fluorescent, (3) 48", T-8 lamp, Instant Start Ballast, NLO (BF: .85-.95) Prismatic Acrylic Diffuser	1	36	Recessed T8 LED Retrofit Lamp with External Driver LED 4' T8 Lamp (3) 12W Lamps			520	0.08	0.04	42	19
127	BRAVO UNIT BRAVO SIDE	STAIRWELL	4	53	4' Wraparound; Tamper-proof Surface Mounted Fluorescent, (2) 48", T-8 lamp, Instant Start Ballast, NLO (BF: .85-.95) Prismatic Acrylic Diffuser	4	24	Surface Mounted T8 LED Retrofit Lamp with External Driver LED 4' T8 Lamp (2) 12W Lamps			8760	0.21	0.10	1,866	833
128	BRAVO UNIT BRAVO SIDE	STAIRWELL	1	19	Universal Face Exit Sign Surface Mounted EXIT Compact Fluorescent, (2) 7W lamp (No Diffuser)	1	9	Surface Mounted Upgrade EXIT Sign LED Light Fixture. (1) 9W			8760	0.02	0.01	166	78
129	CHARLIE UNIT COMMON	ENTRY VESTIBULE	1	53	4' Wraparound; Tamper-proof Surface Mounted Fluorescent, (2) 48", T-8 lamp, Instant Start Ballast, NLO (BF: .85-.95) Prismatic Acrylic Diffuser	1	24	Surface Mounted T8 LED Retrofit Lamp with External Driver LED 4' T8 Lamp (2) 12W Lamps			8760	0.05	0.02	466	208
130	CHARLIE UNIT COMMON	ALPHA LOBBY	3	266	2'x2' Troffer; Tamper-proof Recessed Metal Halide, (1) 250W lamp Prismatic Acrylic Diffuser	3	49	Recessed Chip On Board (COB) Type Screw-in / Bypass Existing Ballast Light Emitting Diode Lamp, Screw-in, (1) 54W lamp - HIGH			8760	0.80	0.15	6,997	1,277
131	CHARLIE UNIT COMMON	ALPHA LOBBY	1	19	Universal Face Exit Sign Surface Mounted EXIT Compact Fluorescent, (2) 7W lamp (No Diffuser)	1	9	Surface Mounted Upgrade EXIT Sign LED Light Fixture. (1) 9W			8760	0.02	0.01	166	78
132	CHARLIE UNIT COMMON	MAINTENANCE ROOM	2	53	4' Wraparound; Tamper-proof Surface Mounted Fluorescent, (2) 48", T-8 lamp, Instant Start Ballast, NLO (BF: .85-.95) Prismatic Acrylic Diffuser	2	24	Surface Mounted T8 LED Retrofit Lamp with External Driver LED 4' T8 Lamp (2) 12W Lamps			520	0.11	0.05	55	25
133	CHARLIE UNIT COMMON	OFFICE	1	53	4' Wraparound; Tamper-proof Surface Mounted Fluorescent, (2) 48", T-8 lamp, Instant Start Ballast, NLO (BF: .85-.95) Prismatic Acrylic Diffuser	1	24	Surface Mounted T8 LED Retrofit Lamp with External Driver LED 4' T8 Lamp (2) 12W Lamps			3640	0.05	0.02	194	86
134	CHARLIE UNIT COMMON	STAFF RESTROOM	1	53	4' Wraparound; Tamper-proof Surface Mounted Fluorescent, (2) 48", T-8 lamp, Instant Start Ballast, NLO (BF: .85-.95) Prismatic Acrylic Diffuser	1	24	Surface Mounted T8 LED Retrofit Lamp with External Driver LED 4' T8 Lamp (2) 12W Lamps			1456	0.05	0.02	78	35
135	CHARLIE UNIT COMMON	CUSTODIAL CLOSET	1	53	4' Wraparound; Tamper-proof Surface Mounted Fluorescent, (2) 48", T-8 lamp, Instant Start Ballast, NLO (BF: .85-.95) Prismatic Acrylic Diffuser	1	24	Surface Mounted T8 LED Retrofit Lamp with External Driver LED 4' T8 Lamp (2) 12W Lamps			1456	0.05	0.02	78	35
136	CHARLIE UNIT COMMON	STAIRWELL / OPEN OFFICE	3	53	4' Wraparound; Tamper-proof Surface Mounted Fluorescent, (2) 48", T-8 lamp, Instant Start Ballast, NLO (BF: .85-.95) Prismatic Acrylic Diffuser	3	24	Surface Mounted T8 LED Retrofit Lamp with External Driver LED 4' T8 Lamp (2) 12W Lamps			8760	0.16	0.07	1,399	624
137	CHARLIE UNIT COMMON	STAIRWELL / OPEN OFFICE	1	3	Universal Face Exit Sign Surface Mounted EXIT Light Emitting Diode, (1) 3W lamp, Single Sided (No Diffuser)	1	3	Existing luminaire to remain as is No Retrofit. To remain as is.			8760	0.00	0.00	25	25
138	CHARLIE UNIT COMMON	STAIRWELL / OPEN OFFICE	1	19	Universal Face Exit Sign Surface Mounted EXIT Compact Fluorescent, (2) 7W lamp (No Diffuser)	1	9	Surface Mounted Upgrade EXIT Sign LED Light Fixture. (1) 9W			8760	0.02	0.01	166	78
139	CHARLIE UNIT COMMON	OPEN OFFICE	12	80	2'x4' Troffer Recessed Flanged Fluorescent, (3) 48", T-8 lamp, Instant Start Ballast, NLO (BF: .85-.95) Deep Cell Parabolic Diffuser	12	36	Recessed Flanged T8 LED Retrofit Lamp with External Driver LED 4' T8 Lamp (3) 12W Lamps			8760	0.96	0.43	8,444	3,746
140	CHARLIE UNIT COMMON	PIPE CHASE	1	53	4' Industrial Surface Mounted Fluorescent, (2) 48", T-8 lamp, Instant Start Ballast, NLO (BF: .85-.95) (No Diffuser)	1	24	Surface Mounted T8 LED Retrofit Lamp with External Driver LED 4' T8 Lamp (2) 12W Lamps			520	0.05	0.02	28	12
141	CHARLIE UNIT COMMON	OFFICE	2	80	2'x4' Troffer Recessed Flanged Fluorescent, (3) 48", T-8 lamp, Instant Start Ballast, NLO (BF: .85-.95) Deep Cell Parabolic Diffuser	2	36	Recessed Flanged T8 LED Retrofit Lamp with External Driver LED 4' T8 Lamp (3) 12W Lamps			3640	0.16	0.07	585	259
142	CHARLIE UNIT COMMON	OFFICE	4	80	2'x4' Troffer Recessed Flanged Fluorescent, (3) 48", T-8 lamp, Instant Start Ballast, NLO (BF: .85-.95) Prismatic Acrylic Diffuser	4	36	Recessed Flanged T8 LED Retrofit Lamp with External Driver LED 4' T8 Lamp (3) 12W Lamps			3640	0.32	0.14	1,169	519
143	CHARLIE UNIT COMMON	OFFICE	2	80	2'x4' Troffer Recessed Flanged Fluorescent, (3) 48", T-8 lamp, Instant Start Ballast, NLO (BF: .85-.95) Prismatic Acrylic Diffuser	2	36	Recessed Flanged T8 LED Retrofit Lamp with External Driver LED 4' T8 Lamp (3) 12W Lamps			3640	0.16	0.07	585	259
144	CHARLIE UNIT COMMON	STORAGE ROOM	1	80	2'x4' Troffer Recessed Flanged Fluorescent, (3) 48", T-8 lamp, Instant Start Ballast, NLO (BF: .85-.95) Prismatic Acrylic Diffuser	1	36	Recessed Flanged T8 LED Retrofit Lamp with External Driver LED 4' T8 Lamp (3) 12W Lamps			1560	0.08	0.04	125	56
145	CHARLIE UNIT COMMON	PIPE CHASE	1	53	4' Industrial Surface Mounted Fluorescent, (2) 48", T-8 lamp, Instant Start Ballast, NLO (BF: .85-.95) (No Diffuser)	1	24	Surface Mounted T8 LED Retrofit Lamp with External Driver LED 4' T8 Lamp (2) 12W Lamps			520	0.05	0.02	28	12
146	CHARLIE UNIT COMMON	BACK STAIRWELL	6	53	4' Wraparound; Tamper-proof Wall Mounted Fluorescent, (2) 48", T-8 lamp, Instant Start Ballast, NLO (BF: .85-.95) Prismatic Acrylic Diffuser	6	24	Wall Mounted T8 LED Retrofit Lamp with External Driver LED 4' T8 Lamp (2) 12W Lamps			8760	0.32	0.14	2,799	1,249
147	CHARLIE UNIT COMMON	MECHANICAL ROOM	12	53	4' Industrial Surface Mounted Fluorescent, (2) 48", T-8 lamp, Instant Start Ballast, NLO (BF: .85-.95) (No Diffuser)	12	24	Surface Mounted T8 LED Retrofit Lamp with External Driver LED 4' T8 Lamp (2) 12W Lamps			520	0.64	0.29	332	148
148	CHARLIE UNIT COMMON	MECHANICAL ROOM	3	19	Universal Face Exit Sign Surface Mounted EXIT Compact Fluorescent, (2) 7W lamp (No Diffuser)	3	9	Surface Mounted Upgrade EXIT Sign LED Light Fixture. (1) 9W			8760	0.06	0.03	498	234
149	CHARLIE UNIT COMMON	EXTERIOR ELECTRICAL ROOM	3	53	4' Industrial Surface Mounted Fluorescent, (2) 48", T-8 lamp, Instant Start Ballast, NLO (BF: .85-.95) (No Diffuser)	3	24	Surface Mounted T8 LED Retrofit Lamp with External Driver LED 4' T8 Lamp (2) 12W Lamps			520	0.16	0.07	83	37

Line #	Facility Area	Space	Pre Fixture Qty	Pre Watts/ Fixt	Pre Description	Post Fixture Qty	Post Watt/ Fixt	Post Description	Wallswitch Sensor	Ceiling Sensor	Hours of Operation	Base kW	Proposed kW	Base kWh	Proposed kWh
150	CHARLIE UNIT COMMON	EXTERIOR SECURITY DATA ROOM	1	53	4' Wraparound; Tamper-proof Surface Mounted Fluorescent, (2) 48", T-8 lamp, Instant Start Ballast, NLO (BF: .85-.95) Prismatic Acrylic Diffuser	1	24	Surface Mounted T8 LED Retrofit Lamp with External Driver LED 4' T8 Lamp (2) 12W Lamps			520	0.05	0.02	28	12
151	CHARLIE UNIT ALPHA SIDE	CA DAYROOM	22	266	2'x2' Troffer; Tamper-proof Recessed Metal Halide, (1) 250W lamp Prismatic Acrylic Diffuser	22	49	Recessed Chip On Board (COB) Type Screw-in / Bypass Existing Ballast Light Emitting Diode Lamp, Screw-in, (1) 54W lamp - HIGH			8760	5.86	1.07	51,309	9,366
152	CHARLIE UNIT ALPHA SIDE	CA DAYROOM	7	53	4' Corner Vanity; Tamper-proof Wall Mounted Fluorescent, (2) 48", T-8 lamp, Instant Start Ballast, NLO (BF: .85-.95) Prismatic Acrylic Diffuser	7	24	Wall Mounted T8 LED Retrofit Lamp with External Driver LED 4' T8 Lamp (2) 12W Lamps			8760	0.37	0.17	3,265	1,457
153	CHARLIE UNIT ALPHA SIDE	CA DAYROOM	1	53	4' Wraparound; Tamper-proof Surface Mounted Fluorescent, (2) 48", T-8 lamp, Instant Start Ballast, NLO (BF: .85-.95) Prismatic Acrylic Diffuser	1	24	Surface Mounted T8 LED Retrofit Lamp with External Driver LED 4' T8 Lamp (2) 12W Lamps			8760	0.05	0.02	466	208
154	CHARLIE UNIT ALPHA SIDE	CA DAYROOM	1	53	4' Wraparound; Tamper-proof Wall Mounted Fluorescent, (2) 48", T-8 lamp, Instant Start Ballast, NLO (BF: .85-.95) Prismatic Acrylic Diffuser	1	24	Wall Mounted T8 LED Retrofit Lamp with External Driver LED 4' T8 Lamp (2) 12W Lamps			8760	0.05	0.02	466	208
155	CHARLIE UNIT ALPHA SIDE	CA DAYROOM	3	98	8' Vapor Proof Surface Mounted Fluorescent, (2) 96", T-8 lamp, Instant Start Ballast, NLO (BF: .85-.95) Vapor Proof Gasketed Diffuser	3	98	Existing luminaire to remain as is No Retrofit. To remain as is.			0	0.30	0.30	-	-
156	CHARLIE UNIT ALPHA SIDE	CA DAYROOM	3	19	Universal Face Exit Sign Surface Mounted EXIT Compact Fluorescent, (2) 7W lamp (No Diffuser)	3	9	Surface Mounted Upgrade EXIT Sign LED Light Fixture. (1) 9W			8760	0.06	0.03	498	234
157	CHARLIE UNIT ALPHA SIDE	CA CELLS 1-64	64	80	4' Wraparound; Tamper-proof Surface Mounted Fluorescent, (3) 48", T-8 lamp, Instant Start Ballast, NLO (BF: .85-.95) Prismatic Acrylic Diffuser	64	36	Surface Mounted T8 LED Retrofit Lamp with External Driver LED 4' T8 Lamp (3) 12W Lamps			2912	5.14	2.28	14,970	6,642
158	CHARLIE UNIT ALPHA SIDE	DORM ONE	4	53	4' Wraparound; Tamper-proof Surface Mounted Fluorescent, (2) 48", T-8 lamp, Instant Start Ballast, NLO (BF: .85-.95) Prismatic Acrylic Diffuser	4	24	Surface Mounted T8 LED Retrofit Lamp with External Driver LED 4' T8 Lamp (2) 12W Lamps			2912	0.21	0.10	620	277
159	CHARLIE UNIT ALPHA SIDE	DORM TWO	5	53	4' Wraparound; Tamper-proof Surface Mounted Fluorescent, (2) 48", T-8 lamp, Instant Start Ballast, NLO (BF: .85-.95) Prismatic Acrylic Diffuser	5	24	Surface Mounted T8 LED Retrofit Lamp with External Driver LED 4' T8 Lamp (2) 12W Lamps			2912	0.27	0.12	775	346
160	CHARLIE UNIT ALPHA SIDE	STAFF RESTROOM	1	53	4' Wraparound; Tamper-proof Surface Mounted Fluorescent, (2) 48", T-8 lamp, Instant Start Ballast, NLO (BF: .85-.95) Prismatic Acrylic Diffuser	1	24	Surface Mounted T8 LED Retrofit Lamp with External Driver LED 4' T8 Lamp (2) 12W Lamps			1456	0.05	0.02	78	35
161	CHARLIE UNIT ALPHA SIDE	LAUNDRY CART ROOM	2	53	4' Wraparound; Tamper-proof Surface Mounted Fluorescent, (2) 48", T-8 lamp, Instant Start Ballast, NLO (BF: .85-.95) Prismatic Acrylic Diffuser	2	24	Surface Mounted T8 LED Retrofit Lamp with External Driver LED 4' T8 Lamp (2) 12W Lamps			1456	0.11	0.05	155	69
162	CHARLIE UNIT ALPHA SIDE	CUSTODIAL CLOSET	1	30	2' Wraparound; Tamper-proof Surface Mounted Fluorescent, (2) 24", T-8 lamp, Instant Start Ballast, NLO (BF: .85-.95) Prismatic Acrylic Diffuser	1	16	Surface Mounted T8 LED Retrofit Lamp with External Driver LED 2' T8 Lamp (2) 8W Lamps			1456	0.03	0.02	43	23
163	CHARLIE UNIT ALPHA SIDE	CUSTODIAL SUPPLY	3	53	4' Industrial Surface Mounted Fluorescent, (2) 48", T-8 lamp, Instant Start Ballast, NLO (BF: .85-.95) (No Diffuser)	3	24	Surface Mounted T8 LED Retrofit Lamp with External Driver LED 4' T8 Lamp (2) 12W Lamps			1456	0.16	0.07	233	104
164	CHARLIE UNIT ALPHA SIDE	PIPE CHASE	1	53	4' Industrial Surface Mounted Fluorescent, (2) 48", T-8 lamp, Instant Start Ballast, NLO (BF: .85-.95) (No Diffuser)	1	24	Surface Mounted T8 LED Retrofit Lamp with External Driver LED 4' T8 Lamp (2) 12W Lamps			200	0.05	0.02	11	5
165	CHARLIE UNIT ALPHA SIDE	SHOWERS	8	30	2' Wraparound; Tamper-proof Surface Mounted Fluorescent, (2) 24", T-8 lamp, Instant Start Ballast, NLO (BF: .85-.95) Prismatic Acrylic Diffuser	8	16	Surface Mounted T8 LED Retrofit Lamp with External Driver LED 2' T8 Lamp (2) 8W Lamps			8760	0.24	0.13	2,087	1,110
166	CHARLIE UNIT ALPHA SIDE	SHOWERS	3	80	4' Wraparound; Tamper-proof Surface Mounted Fluorescent, (3) 48", T-8 lamp, Instant Start Ballast, NLO (BF: .85-.95) Prismatic Acrylic Diffuser	3	36	Surface Mounted T8 LED Retrofit Lamp with External Driver LED 4' T8 Lamp (3) 12W Lamps			8760	0.24	0.11	2,111	937
167	CHARLIE UNIT ALPHA SIDE	UPPER SHOWERS	5	30	2' Wraparound; Tamper-proof Surface Mounted Fluorescent, (2) 24", T-8 lamp, Instant Start Ballast, NLO (BF: .85-.95) Prismatic Acrylic Diffuser	5	16	Surface Mounted T8 LED Retrofit Lamp with External Driver LED 2' T8 Lamp (2) 8W Lamps			8760	0.15	0.08	1,304	694
168	CHARLIE UNIT ALPHA SIDE	UPPER SHOWERS	1	53	4' Wraparound; Tamper-proof Surface Mounted Fluorescent, (2) 48", T-8 lamp, Instant Start Ballast, NLO (BF: .85-.95) Prismatic Acrylic Diffuser	1	24	Surface Mounted T8 LED Retrofit Lamp with External Driver LED 4' T8 Lamp (2) 12W Lamps			8760	0.05	0.02	466	208
169	CHARLIE UNIT ALPHA SIDE	STORAGE ROOM	1	80	2'x4' Troffer Recessed Fluorescent, (3) 48", T-8 lamp, Instant Start Ballast, NLO (BF: .85-.95) Prismatic Acrylic Diffuser	1	36	Recessed T8 LED Retrofit Lamp with External Driver LED 4' T8 Lamp (3) 12W Lamps			520	0.08	0.04	42	19
170	CHARLIE UNIT ALPHA SIDE	STAIRWELL	4	53	4' Wraparound; Tamper-proof Surface Mounted Fluorescent, (2) 48", T-8 lamp, Instant Start Ballast, NLO (BF: .85-.95) Prismatic Acrylic Diffuser	4	24	Surface Mounted T8 LED Retrofit Lamp with External Driver LED 4' T8 Lamp (2) 12W Lamps			8760	0.21	0.10	1,866	833
171	CHARLIE UNIT ALPHA SIDE	STAIRWELL	1	19	Universal Face Exit Sign Surface Mounted EXIT Compact Fluorescent, (2) 7W lamp (No Diffuser)	1	9	Surface Mounted Upgrade EXIT Sign LED Light Fixture. (1) 9W			8760	0.02	0.01	166	78
172	CHARLIE UNIT BRAVO SIDE	CB DAYROOM	16	266	2'x2' Troffer; Tamper-proof Recessed Metal Halide, (1) 250W lamp Prismatic Acrylic Diffuser	16	49	Recessed Chip On Board (COB) Type Screw-in / Bypass Existing Ballast Light Emitting Diode Lamp, Screw-in, (1) 54W lamp - HIGH			8760	4.26	0.78	37,316	6,812
173	CHARLIE UNIT BRAVO SIDE	CB DAYROOM	6	130	2'x2' Troffer Recessed Flanged Compact Fluorescent, Biax, (4) 40W lamp Prismatic Acrylic Diffuser	6	130	Existing luminaire to remain as is No Retrofit. To remain as is.			8760	0.78	0.78	6,831	6,831
174	CHARLIE UNIT BRAVO SIDE	CB DAYROOM	7	53	4' Corner Vanity; Tamper-proof Wall Mounted Fluorescent, (2) 48", T-8 lamp, Instant Start Ballast, NLO (BF: .85-.95) Prismatic Acrylic Diffuser	7	24	Wall Mounted T8 LED Retrofit Lamp with External Driver LED 4' T8 Lamp (2) 12W Lamps			8760	0.37	0.17	3,265	1,457
175	CHARLIE UNIT BRAVO SIDE	CB DAYROOM	1	53	4' Wraparound; Tamper-proof Surface Mounted Fluorescent, (2) 48", T-8 lamp, Instant Start Ballast, NLO (BF: .85-.95) Prismatic Acrylic Diffuser	1	24	Surface Mounted T8 LED Retrofit Lamp with External Driver LED 4' T8 Lamp (2) 12W Lamps			8760	0.05	0.02	466	208
176	CHARLIE UNIT BRAVO SIDE	CB DAYROOM	1	53	4' Wraparound; Tamper-proof Wall Mounted Fluorescent, (2) 48", T-8 lamp, Instant Start Ballast, NLO (BF: .85-.95) Prismatic Acrylic Diffuser	1	24	Wall Mounted T8 LED Retrofit Lamp with External Driver LED 4' T8 Lamp (2) 12W Lamps			8760	0.05	0.02	466	208
177	CHARLIE UNIT BRAVO SIDE	CB DAYROOM	3	98	8' Vapor Proof Surface Mounted Fluorescent, (2) 96", T-8 lamp, Instant Start Ballast, NLO (BF: .85-.95) Vapor Proof Gasketed Diffuser	3	98	Existing luminaire to remain as is No Retrofit. To remain as is.			0	0.30	0.30	-	-
178	CHARLIE UNIT BRAVO SIDE	CB DAYROOM	3	19	Universal Face Exit Sign Surface Mounted EXIT Compact Fluorescent, (2) 7W lamp (No Diffuser)	3	9	Surface Mounted Upgrade EXIT Sign LED Light Fixture. (1) 9W			8760	0.06	0.03	498	234
179	CHARLIE UNIT BRAVO SIDE	CB CELLS 1-64	64	80	4' Wraparound; Tamper-proof Surface Mounted Fluorescent, (3) 48", T-8 lamp, Instant Start Ballast, NLO (BF: .85-.95) Prismatic Acrylic Diffuser	64	36	Surface Mounted T8 LED Retrofit Lamp with External Driver LED 4' T8 Lamp (3) 12W Lamps			2912	5.14	2.28	14,970	6,642

Line #	Facility Area	Space	Pre Fixture Qty	Pre Watts/ Fixt	Pre Description	Post Fixture Qty	Post Watt/ Fixt	Post Description	Wallswitch Sensor	Ceiling Sensor	Hours of Operation	Base kW	Proposed kW	Base kWh	Proposed kWh
180	CHARLIE UNIT BRAVO SIDE	DORM ONE	4	53	4' Wraparound; Tamper-proof Surface Mounted Fluorescent, (2) 48", T-8 lamp, Instant Start Ballast, NLO (BF: .85-.95) Prismatic Acrylic Diffuser	4	24	Surface Mounted T8 LED Retrofit Lamp with External Driver LED 4' T8 Lamp (2) 12W Lamps			2912	0.21	0.10	620	277
181	CHARLIE UNIT BRAVO SIDE	DORM TWO	5	53	4' Wraparound; Tamper-proof Surface Mounted Fluorescent, (2) 48", T-8 lamp, Instant Start Ballast, NLO (BF: .85-.95) Prismatic Acrylic Diffuser	5	24	Surface Mounted T8 LED Retrofit Lamp with External Driver LED 4' T8 Lamp (2) 12W Lamps			2912	0.27	0.12	775	346
182	CHARLIE UNIT BRAVO SIDE	STAFF RESTROOM	1	53	4' Wraparound; Tamper-proof Surface Mounted Fluorescent, (2) 48", T-8 lamp, Instant Start Ballast, NLO (BF: .85-.95) Prismatic Acrylic Diffuser	1	24	Surface Mounted T8 LED Retrofit Lamp with External Driver LED 4' T8 Lamp (2) 12W Lamps			1456	0.05	0.02	78	35
183	CHARLIE UNIT BRAVO SIDE	LAUNDRY CART ROOM	2	53	4' Wraparound; Tamper-proof Surface Mounted Fluorescent, (2) 48", T-8 lamp, Instant Start Ballast, NLO (BF: .85-.95) Prismatic Acrylic Diffuser	2	24	Surface Mounted T8 LED Retrofit Lamp with External Driver LED 4' T8 Lamp (2) 12W Lamps			1456	0.11	0.05	155	69
184	CHARLIE UNIT BRAVO SIDE	CUSTODIAL CLOSET	1	30	2' Wraparound; Tamper-proof Surface Mounted Fluorescent, (2) 24", T-8 lamp, Instant Start Ballast, NLO (BF: .85-.95) Prismatic Acrylic Diffuser	1	16	Surface Mounted T8 LED Retrofit Lamp with External Driver LED 2' T8 Lamp (2) 8W Lamps			1456	0.03	0.02	43	23
185	CHARLIE UNIT BRAVO SIDE	CUSTODIAL SUPPLY	3	53	4' Industrial Surface Mounted Fluorescent, (2) 48", T-8 lamp, Instant Start Ballast, NLO (BF: .85-.95) (No Diffuser)	3	24	Surface Mounted T8 LED Retrofit Lamp with External Driver LED 4' T8 Lamp (2) 12W Lamps			1456	0.16	0.07	233	104
186	CHARLIE UNIT BRAVO SIDE	PIPE CHASE	1	53	4' Industrial Surface Mounted Fluorescent, (2) 48", T-8 lamp, Instant Start Ballast, NLO (BF: .85-.95) (No Diffuser)	1	24	Surface Mounted T8 LED Retrofit Lamp with External Driver LED 4' T8 Lamp (2) 12W Lamps			200	0.05	0.02	11	5
187	CHARLIE UNIT BRAVO SIDE	SHOWERS	8	30	2' Wraparound; Tamper-proof Surface Mounted Fluorescent, (2) 24", T-8 lamp, Instant Start Ballast, NLO (BF: .85-.95) Prismatic Acrylic Diffuser	8	16	Surface Mounted T8 LED Retrofit Lamp with External Driver LED 2' T8 Lamp (2) 8W Lamps			8760	0.24	0.13	2,087	1,110
188	CHARLIE UNIT BRAVO SIDE	SHOWERS	3	80	4' Wraparound; Tamper-proof Surface Mounted Fluorescent, (3) 48", T-8 lamp, Instant Start Ballast, NLO (BF: .85-.95) Prismatic Acrylic Diffuser	3	36	Surface Mounted T8 LED Retrofit Lamp with External Driver LED 4' T8 Lamp (3) 12W Lamps			8760	0.24	0.11	2,111	937
189	CHARLIE UNIT BRAVO SIDE	UPPER SHOWERS	5	30	2' Wraparound; Tamper-proof Surface Mounted Fluorescent, (2) 24", T-8 lamp, Instant Start Ballast, NLO (BF: .85-.95) Prismatic Acrylic Diffuser	5	16	Surface Mounted T8 LED Retrofit Lamp with External Driver LED 2' T8 Lamp (2) 8W Lamps			8760	0.15	0.08	1,304	694
190	CHARLIE UNIT BRAVO SIDE	UPPER SHOWERS	1	53	4' Wraparound; Tamper-proof Surface Mounted Fluorescent, (2) 48", T-8 lamp, Instant Start Ballast, NLO (BF: .85-.95) Prismatic Acrylic Diffuser	1	24	Surface Mounted T8 LED Retrofit Lamp with External Driver LED 4' T8 Lamp (2) 12W Lamps			8760	0.05	0.02	466	208
191	CHARLIE UNIT BRAVO SIDE	STORAGE ROOM	1	80	2'x4' Troffer Recessed Fluorescent, (3) 48", T-8 lamp, Instant Start Ballast, NLO (BF: .85-.95) Prismatic Acrylic Diffuser	1	36	Recessed T8 LED Retrofit Lamp with External Driver LED 4' T8 Lamp (3) 12W Lamps			520	0.08	0.04	42	19
192	CHARLIE UNIT BRAVO SIDE	STAIRWELL	4	53	4' Wraparound; Tamper-proof Surface Mounted Fluorescent, (2) 48", T-8 lamp, Instant Start Ballast, NLO (BF: .85-.95) Prismatic Acrylic Diffuser	4	24	Surface Mounted T8 LED Retrofit Lamp with External Driver LED 4' T8 Lamp (2) 12W Lamps			8760	0.21	0.10	1,866	833
193	CHARLIE UNIT BRAVO SIDE	STAIRWELL	1	19	Universal Face Exit Sign Surface Mounted EXIT Compact Fluorescent, (2) 7W lamp (No Diffuser)	1	9	Surface Mounted Upgrade EXIT Sign LED Light Fixture. (1) 9W			8760	0.02	0.01	166	78
194	DELTA UNIT COMMON	ENTRY VESTIBULE	1	53	4' Wraparound; Tamper-proof Surface Mounted Fluorescent, (2) 48", T-8 lamp, Instant Start Ballast, NLO (BF: .85-.95) Prismatic Acrylic Diffuser	1	24	Surface Mounted T8 LED Retrofit Lamp with External Driver LED 4' T8 Lamp (2) 12W Lamps			8760	0.05	0.02	466	208
195	DELTA UNIT COMMON	ALPHA LOBBY	3	266	2'x2' Troffer; Tamper-proof Recessed Metal Halide, (1) 250W lamp Prismatic Acrylic Diffuser	3	49	Recessed Chip On Board (COB) Type Screw-in / Bypass Existing Ballast Light Emitting Diode Lamp, Screw-in, (1) 54W lamp - HIGH			8760	0.80	0.15	6,997	1,277
196	DELTA UNIT COMMON	ALPHA LOBBY	1	19	Universal Face Exit Sign Surface Mounted EXIT Compact Fluorescent, (2) 7W lamp (No Diffuser)	1	9	Surface Mounted Upgrade EXIT Sign LED Light Fixture. (1) 9W			8760	0.02	0.01	166	78
197	DELTA UNIT COMMON	MAINTENANCE ROOM	2	53	4' Wraparound; Tamper-proof Surface Mounted Fluorescent, (2) 48", T-8 lamp, Instant Start Ballast, NLO (BF: .85-.95) Prismatic Acrylic Diffuser	2	24	Surface Mounted T8 LED Retrofit Lamp with External Driver LED 4' T8 Lamp (2) 12W Lamps			520	0.11	0.05	55	25
198	DELTA UNIT COMMON	OFFICE	1	53	4' Wraparound; Tamper-proof Surface Mounted Fluorescent, (2) 48", T-8 lamp, Instant Start Ballast, NLO (BF: .85-.95) Prismatic Acrylic Diffuser	1	24	Surface Mounted T8 LED Retrofit Lamp with External Driver LED 4' T8 Lamp (2) 12W Lamps			3640	0.05	0.02	194	86
199	DELTA UNIT COMMON	STAFF RESTROOM	1	53	4' Wraparound; Tamper-proof Surface Mounted Fluorescent, (2) 48", T-8 lamp, Instant Start Ballast, NLO (BF: .85-.95) Prismatic Acrylic Diffuser	1	24	Surface Mounted T8 LED Retrofit Lamp with External Driver LED 4' T8 Lamp (2) 12W Lamps			1456	0.05	0.02	78	35
200	DELTA UNIT COMMON	CUSTODIAL CLOSET	1	53	4' Wraparound; Tamper-proof Surface Mounted Fluorescent, (2) 48", T-8 lamp, Instant Start Ballast, NLO (BF: .85-.95) Prismatic Acrylic Diffuser	1	24	Surface Mounted T8 LED Retrofit Lamp with External Driver LED 4' T8 Lamp (2) 12W Lamps			1456	0.05	0.02	78	35
201	DELTA UNIT COMMON	STAIRWELL / OPEN OFFICE	3	53	4' Wraparound; Tamper-proof Surface Mounted Fluorescent, (2) 48", T-8 lamp, Instant Start Ballast, NLO (BF: .85-.95) Prismatic Acrylic Diffuser	3	24	Surface Mounted T8 LED Retrofit Lamp with External Driver LED 4' T8 Lamp (2) 12W Lamps			8760	0.16	0.07	1,399	624
202	DELTA UNIT COMMON	STAIRWELL / OPEN OFFICE	1	3	Universal Face Exit Sign Surface Mounted EXIT Light Emitting Diode, (1) 3W lamp, Single Sided (No Diffuser)	1	3	Existing luminaire to remain as is No Retrofit. To remain as is.			8760	0.00	0.00	25	25
203	DELTA UNIT COMMON	STAIRWELL / OPEN OFFICE	1	19	Universal Face Exit Sign Surface Mounted EXIT Compact Fluorescent, (2) 7W lamp (No Diffuser)	1	9	Surface Mounted Upgrade EXIT Sign LED Light Fixture. (1) 9W			8760	0.02	0.01	166	78
204	DELTA UNIT COMMON	OPEN OFFICE	12	80	2'x4' Troffer Recessed Flanged Fluorescent, (3) 48", T-8 lamp, Instant Start Ballast, NLO (BF: .85-.95) Deep Cell Parabolic Diffuser	12	36	Recessed Flanged T8 LED Retrofit Lamp with External Driver LED 4' T8 Lamp (3) 12W Lamps			8760	0.96	0.43	8,444	3,746
205	DELTA UNIT COMMON	PIPE CHASE	1	53	4' Industrial Surface Mounted Fluorescent, (2) 48", T-8 lamp, Instant Start Ballast, NLO (BF: .85-.95) (No Diffuser)	1	24	Surface Mounted T8 LED Retrofit Lamp with External Driver LED 4' T8 Lamp (2) 12W Lamps			520	0.05	0.02	28	12
206	DELTA UNIT COMMON	OFFICE	2	80	2'x4' Troffer Recessed Flanged Fluorescent, (3) 48", T-8 lamp, Instant Start Ballast, NLO (BF: .85-.95) Deep Cell Parabolic Diffuser	2	36	Recessed Flanged T8 LED Retrofit Lamp with External Driver LED 4' T8 Lamp (3) 12W Lamps			3640	0.16	0.07	585	259
207	DELTA UNIT COMMON	OFFICE	4	80	2'x4' Troffer Recessed Flanged Fluorescent, (3) 48", T-8 lamp, Instant Start Ballast, NLO (BF: .85-.95) Prismatic Acrylic Diffuser	4	36	Recessed Flanged T8 LED Retrofit Lamp with External Driver LED 4' T8 Lamp (3) 12W Lamps			3640	0.32	0.14	1,169	519
208	DELTA UNIT COMMON	OFFICE	2	80	2'x4' Troffer Recessed Flanged Fluorescent, (3) 48", T-8 lamp, Instant Start Ballast, NLO (BF: .85-.95) Prismatic Acrylic Diffuser	2	36	Recessed Flanged T8 LED Retrofit Lamp with External Driver LED 4' T8 Lamp (3) 12W Lamps			3640	0.16	0.07	585	259
209	DELTA UNIT COMMON	STORAGE ROOM	1	80	2'x4' Troffer Recessed Flanged Fluorescent, (3) 48", T-8 lamp, Instant Start Ballast, NLO (BF: .85-.95) Prismatic Acrylic Diffuser	1	36	Recessed Flanged T8 LED Retrofit Lamp with External Driver LED 4' T8 Lamp (3) 12W Lamps			1560	0.08	0.04	125	56

Line #	Facility Area	Space	Pre Fixture Qty	Pre Watts/ Fixt	Pre Description	Post Fixture Qty	Post Watt/ Fixt	Post Description	Wallswitch Sensor	Ceiling Sensor	Hours of Operation	Base kW	Proposed kW	Base kWh	Proposed kWh
210	DELTA UNIT COMMON	PIPE CHASE	1	53	4' Industrial Surface Mounted Fluorescent, (2) 48", T-8 lamp, Instant Start Ballast, NLO (BF: .85-.95) (No Diffuser)	1	24	Surface Mounted T8 LED Retrofit Lamp with External Driver LED 4' T8 Lamp (2) 12W Lamps			520	0.05	0.02	28	12
211	DELTA UNIT COMMON	BACK STAIRWELL	6	53	4' Wraparound; Tamper-proof Wall Mounted Fluorescent, (2) 48", T-8 lamp, Instant Start Ballast, NLO (BF: .85-.95) Prismatic Acrylic Diffuser	6	24	Wall Mounted T8 LED Retrofit Lamp with External Driver LED 4' T8 Lamp (2) 12W Lamps			8760	0.32	0.14	2,799	1,249
212	DELTA UNIT COMMON	MECHANICAL ROOM	12	53	4' Industrial Surface Mounted Fluorescent, (2) 48", T-8 lamp, Instant Start Ballast, NLO (BF: .85-.95) (No Diffuser)	12	24	Surface Mounted T8 LED Retrofit Lamp with External Driver LED 4' T8 Lamp (2) 12W Lamps			520	0.64	0.29	332	148
213	DELTA UNIT COMMON	MECHANICAL ROOM	3	19	Universal Face Exit Sign Surface Mounted EXIT Compact Fluorescent, (2) 7W lamp (No Diffuser)	3	9	Surface Mounted Upgrade EXIT Sign LED Light Fixture. (1) 9W			8760	0.06	0.03	498	234
214	DELTA UNIT COMMON	EXTERIOR ELECTRICAL ROOM	3	53	4' Industrial Surface Mounted Fluorescent, (2) 48", T-8 lamp, Instant Start Ballast, NLO (BF: .85-.95) (No Diffuser)	3	24	Surface Mounted T8 LED Retrofit Lamp with External Driver LED 4' T8 Lamp (2) 12W Lamps			520	0.16	0.07	83	37
215	DELTA UNIT COMMON	EXTERIOR SECURITY DATA ROOM	1	53	4' Wraparound; Tamper-proof Surface Mounted Fluorescent, (2) 48", T-8 lamp, Instant Start Ballast, NLO (BF: .85-.95) Prismatic Acrylic Diffuser	1	24	Surface Mounted T8 LED Retrofit Lamp with External Driver LED 4' T8 Lamp (2) 12W Lamps			520	0.05	0.02	28	12
216	DELTA UNIT ALPHA SIDE	DA DAYROOM	22	266	2'x2' Troffer; Tamper-proof Recessed Metal Halide, (1) 250W lamp Prismatic Acrylic Diffuser	22	49	Recessed Chip On Board (COB) Type Screw-in / Bypass Existing Ballast Light Emitting Diode Lamp, Screw-in, (1) 54W lamp - HIGH			8760	5.86	1.07	51,309	9,366
217	DELTA UNIT ALPHA SIDE	DA DAYROOM	7	53	4' Corner Vanity; Tamper-proof Wall Mounted Fluorescent, (2) 48", T-8 lamp, Instant Start Ballast, NLO (BF: .85-.95) Prismatic Acrylic Diffuser	7	24	Wall Mounted T8 LED Retrofit Lamp with External Driver LED 4' T8 Lamp (2) 12W Lamps			8760	0.37	0.17	3,265	1,457
218	DELTA UNIT ALPHA SIDE	DA DAYROOM	1	53	4' Wraparound; Tamper-proof Surface Mounted Fluorescent, (2) 48", T-8 lamp, Instant Start Ballast, NLO (BF: .85-.95) Prismatic Acrylic Diffuser	1	24	Surface Mounted T8 LED Retrofit Lamp with External Driver LED 4' T8 Lamp (2) 12W Lamps			8760	0.05	0.02	466	208
219	DELTA UNIT ALPHA SIDE	DA DAYROOM	1	53	4' Wraparound; Tamper-proof Wall Mounted Fluorescent, (2) 48", T-8 lamp, Instant Start Ballast, NLO (BF: .85-.95) Prismatic Acrylic Diffuser	1	24	Wall Mounted T8 LED Retrofit Lamp with External Driver LED 4' T8 Lamp (2) 12W Lamps			8760	0.05	0.02	466	208
220	DELTA UNIT ALPHA SIDE	DA DAYROOM	3	98	8' Vapor Proof Surface Mounted Fluorescent, (2) 96", T-8 lamp, Instant Start Ballast, NLO (BF: .85-.95) Vapor Proof Gasketed Diffuser	3	98	Existing luminaire to remain as is No Retrofit. To remain as is.			0	0.30	0.30	-	-
221	DELTA UNIT ALPHA SIDE	DA DAYROOM	3	19	Universal Face Exit Sign Surface Mounted EXIT Compact Fluorescent, (2) 7W lamp (No Diffuser)	3	9	Surface Mounted Upgrade EXIT Sign LED Light Fixture. (1) 9W			8760	0.06	0.03	498	234
222	DELTA UNIT ALPHA SIDE	DA CELLS 1-64	64	80	4' Wraparound; Tamper-proof Surface Mounted Fluorescent, (3) 48", T-8 lamp, Instant Start Ballast, NLO (BF: .85-.95) Prismatic Acrylic Diffuser	64	36	Surface Mounted T8 LED Retrofit Lamp with External Driver LED 4' T8 Lamp (3) 12W Lamps			2912	5.14	2.28	14,970	6,642
223	DELTA UNIT ALPHA SIDE	DORM ONE	4	53	4' Wraparound; Tamper-proof Surface Mounted Fluorescent, (2) 48", T-8 lamp, Instant Start Ballast, NLO (BF: .85-.95) Prismatic Acrylic Diffuser	4	24	Surface Mounted T8 LED Retrofit Lamp with External Driver LED 4' T8 Lamp (2) 12W Lamps			2912	0.21	0.10	620	277
224	DELTA UNIT ALPHA SIDE	DORM TWO	5	53	4' Wraparound; Tamper-proof Surface Mounted Fluorescent, (2) 48", T-8 lamp, Instant Start Ballast, NLO (BF: .85-.95) Prismatic Acrylic Diffuser	5	24	Surface Mounted T8 LED Retrofit Lamp with External Driver LED 4' T8 Lamp (2) 12W Lamps			2912	0.27	0.12	775	346
225	DELTA UNIT ALPHA SIDE	STAFF RESTROOM	1	53	4' Wraparound; Tamper-proof Surface Mounted Fluorescent, (2) 48", T-8 lamp, Instant Start Ballast, NLO (BF: .85-.95) Prismatic Acrylic Diffuser	1	24	Surface Mounted T8 LED Retrofit Lamp with External Driver LED 4' T8 Lamp (2) 12W Lamps			1456	0.05	0.02	78	35
226	DELTA UNIT ALPHA SIDE	LAUNDRY CART ROOM	2	53	4' Wraparound; Tamper-proof Surface Mounted Fluorescent, (2) 48", T-8 lamp, Instant Start Ballast, NLO (BF: .85-.95) Prismatic Acrylic Diffuser	2	24	Surface Mounted T8 LED Retrofit Lamp with External Driver LED 4' T8 Lamp (2) 12W Lamps			1456	0.11	0.05	155	69
227	DELTA UNIT ALPHA SIDE	CUSTODIAL CLOSET	1	30	2' Wraparound; Tamper-proof Surface Mounted Fluorescent, (2) 24", T-8 lamp, Instant Start Ballast, NLO (BF: .85-.95) Prismatic Acrylic Diffuser	1	16	Surface Mounted T8 LED Retrofit Lamp with External Driver LED 2' T8 Lamp (2) 8W Lamps			1456	0.03	0.02	43	23
228	DELTA UNIT ALPHA SIDE	CUSTODIAL SUPPLY	3	53	4' Industrial Surface Mounted Fluorescent, (2) 48", T-8 lamp, Instant Start Ballast, NLO (BF: .85-.95) (No Diffuser)	3	24	Surface Mounted T8 LED Retrofit Lamp with External Driver LED 4' T8 Lamp (2) 12W Lamps			1456	0.16	0.07	233	104
229	DELTA UNIT ALPHA SIDE	PIPE CHASE	1	53	4' Industrial Surface Mounted Fluorescent, (2) 48", T-8 lamp, Instant Start Ballast, NLO (BF: .85-.95) (No Diffuser)	1	24	Surface Mounted T8 LED Retrofit Lamp with External Driver LED 4' T8 Lamp (2) 12W Lamps			200	0.05	0.02	11	5
230	DELTA UNIT ALPHA SIDE	SHOWERS	8	30	2' Wraparound; Tamper-proof Surface Mounted Fluorescent, (2) 24", T-8 lamp, Instant Start Ballast, NLO (BF: .85-.95) Prismatic Acrylic Diffuser	8	16	Surface Mounted T8 LED Retrofit Lamp with External Driver LED 2' T8 Lamp (2) 8W Lamps			8760	0.24	0.13	2,087	1,110
231	DELTA UNIT ALPHA SIDE	SHOWERS	3	80	4' Wraparound; Tamper-proof Surface Mounted Fluorescent, (3) 48", T-8 lamp, Instant Start Ballast, NLO (BF: .85-.95) Prismatic Acrylic Diffuser	3	36	Surface Mounted T8 LED Retrofit Lamp with External Driver LED 4' T8 Lamp (3) 12W Lamps			8760	0.24	0.11	2,111	937
232	DELTA UNIT ALPHA SIDE	UPPER SHOWERS	5	30	2' Wraparound; Tamper-proof Surface Mounted Fluorescent, (2) 24", T-8 lamp, Instant Start Ballast, NLO (BF: .85-.95) Prismatic Acrylic Diffuser	5	16	Surface Mounted T8 LED Retrofit Lamp with External Driver LED 2' T8 Lamp (2) 8W Lamps			8760	0.15	0.08	1,304	694
233	DELTA UNIT ALPHA SIDE	UPPER SHOWERS	1	53	4' Wraparound; Tamper-proof Surface Mounted Fluorescent, (2) 48", T-8 lamp, Instant Start Ballast, NLO (BF: .85-.95) Prismatic Acrylic Diffuser	1	24	Surface Mounted T8 LED Retrofit Lamp with External Driver LED 4' T8 Lamp (2) 12W Lamps			8760	0.05	0.02	466	208
234	DELTA UNIT ALPHA SIDE	STORAGE ROOM	1	80	2'x4' Troffer Recessed Fluorescent, (3) 48", T-8 lamp, Instant Start Ballast, NLO (BF: .85-.95) Prismatic Acrylic Diffuser	1	36	Recessed T8 LED Retrofit Lamp with External Driver LED 4' T8 Lamp (3) 12W Lamps			520	0.08	0.04	42	19
235	DELTA UNIT ALPHA SIDE	STAIRWELL	4	53	4' Wraparound; Tamper-proof Surface Mounted Fluorescent, (2) 48", T-8 lamp, Instant Start Ballast, NLO (BF: .85-.95) Prismatic Acrylic Diffuser	4	24	Surface Mounted T8 LED Retrofit Lamp with External Driver LED 4' T8 Lamp (2) 12W Lamps			8760	0.21	0.10	1,866	833
236	DELTA UNIT ALPHA SIDE	STAIRWELL	1	19	Universal Face Exit Sign Surface Mounted EXIT Compact Fluorescent, (2) 7W lamp (No Diffuser)	1	9	Surface Mounted Upgrade EXIT Sign LED Light Fixture. (1) 9W			8760	0.02	0.01	166	78
237	DELTA UNIT BRAVO SIDE	DB DAYROOM	22	266	2'x2' Troffer; Tamper-proof Recessed Metal Halide, (1) 250W lamp Prismatic Acrylic Diffuser	22	49	Recessed Chip On Board (COB) Type Screw-in / Bypass Existing Ballast Light Emitting Diode Lamp, Screw-in, (1) 54W lamp - HIGH			8760	5.86	1.07	51,309	9,366
238	DELTA UNIT BRAVO SIDE	DB DAYROOM	7	53	4' Corner Vanity; Tamper-proof Wall Mounted Fluorescent, (2) 48", T-8 lamp, Instant Start Ballast, NLO (BF: .85-.95) Prismatic Acrylic Diffuser	7	24	Wall Mounted T8 LED Retrofit Lamp with External Driver LED 4' T8 Lamp (2) 12W Lamps			8760	0.37	0.17	3,265	1,457
239	DELTA UNIT BRAVO SIDE	DB DAYROOM	1	53	4' Wraparound; Tamper-proof Surface Mounted Fluorescent, (2) 48", T-8 lamp, Instant Start Ballast, NLO (BF: .85-.95) Prismatic Acrylic Diffuser	1	24	Surface Mounted T8 LED Retrofit Lamp with External Driver LED 4' T8 Lamp (2) 12W Lamps			8760	0.05	0.02	466	208

Line #	Facility Area	Space	Pre Fixture Qty	Pre Watts/ Fixt	Pre Description	Post Fixture Qty	Post Watt/ Fixt	Post Description	Wallswitch Sensor	Ceiling Sensor	Hours of Operation	Base kW	Proposed kW	Base kWh	Proposed kWh
240	DELTA UNIT BRAVO SIDE	DB DAYROOM	1	53	4' Wraparound; Tamper-proof Wall Mounted Fluorescent, (2) 48", T-8 lamp, Instant Start Ballast, NLO (BF: .85-.95) Prismatic Acrylic Diffuser	1	24	Wall Mounted T8 LED Retrofit Lamp with External Driver LED 4' T8 Lamp (2) 12W Lamps			8760	0.05	0.02	466	208
241	DELTA UNIT BRAVO SIDE	DB DAYROOM	3	98	8' Vapor Proof Surface Mounted Fluorescent, (2) 96", T-8 lamp, Instant Start Ballast, NLO (BF: .85-.95) Vapor Proof Gasketed Diffuser	3	98	Existing luminaire to remain as is No Retrofit. To remain as is.			0	0.30	0.30	-	-
242	DELTA UNIT BRAVO SIDE	DB DAYROOM	3	19	Universal Face Exit Sign Surface Mounted EXIT Compact Fluorescent, (2) 7W lamp (No Diffuser)	3	9	Surface Mounted Upgrade EXIT Sign LED Light Fixture. (1) 9W			8760	0.06	0.03	498	234
243	DELTA UNIT BRAVO SIDE	DB CELLS 1-64	64	80	4' Wraparound; Tamper-proof Surface Mounted Fluorescent, (3) 48", T-8 lamp, Instant Start Ballast, NLO (BF: .85-.95) Prismatic Acrylic Diffuser	64	36	Surface Mounted T8 LED Retrofit Lamp with External Driver LED 4' T8 Lamp (3) 12W Lamps			2912	5.14	2.28	14,970	6,642
244	DELTA UNIT BRAVO SIDE	DORM ONE	4	53	4' Wraparound; Tamper-proof Surface Mounted Fluorescent, (2) 48", T-8 lamp, Instant Start Ballast, NLO (BF: .85-.95) Prismatic Acrylic Diffuser	4	24	Surface Mounted T8 LED Retrofit Lamp with External Driver LED 4' T8 Lamp (2) 12W Lamps			2912	0.21	0.10	620	277
245	DELTA UNIT BRAVO SIDE	DORM TWO	5	53	4' Wraparound; Tamper-proof Surface Mounted Fluorescent, (2) 48", T-8 lamp, Instant Start Ballast, NLO (BF: .85-.95) Prismatic Acrylic Diffuser	5	24	Surface Mounted T8 LED Retrofit Lamp with External Driver LED 4' T8 Lamp (2) 12W Lamps			2912	0.27	0.12	775	346
246	DELTA UNIT BRAVO SIDE	STAFF RESTROOM	1	53	4' Wraparound; Tamper-proof Surface Mounted Fluorescent, (2) 48", T-8 lamp, Instant Start Ballast, NLO (BF: .85-.95) Prismatic Acrylic Diffuser	1	24	Surface Mounted T8 LED Retrofit Lamp with External Driver LED 4' T8 Lamp (2) 12W Lamps			1456	0.05	0.02	78	35
247	DELTA UNIT BRAVO SIDE	LAUNDRY CART ROOM	2	53	4' Wraparound; Tamper-proof Surface Mounted Fluorescent, (2) 48", T-8 lamp, Instant Start Ballast, NLO (BF: .85-.95) Prismatic Acrylic Diffuser	2	24	Surface Mounted T8 LED Retrofit Lamp with External Driver LED 4' T8 Lamp (2) 12W Lamps			1456	0.11	0.05	155	69
248	DELTA UNIT BRAVO SIDE	CUSTODIAL CLOSET	1	30	2' Wraparound; Tamper-proof Surface Mounted Fluorescent, (2) 24", T-8 lamp, Instant Start Ballast, NLO (BF: .85-.95) Prismatic Acrylic Diffuser	1	16	Surface Mounted T8 LED Retrofit Lamp with External Driver LED 2' T8 Lamp (2) 8W Lamps			1456	0.03	0.02	43	23
249	DELTA UNIT BRAVO SIDE	CUSTODIAL SUPPLY	3	53	4' Industrial Surface Mounted Fluorescent, (2) 48", T-8 lamp, Instant Start Ballast, NLO (BF: .85-.95) (No Diffuser)	3	24	Surface Mounted T8 LED Retrofit Lamp with External Driver LED 4' T8 Lamp (2) 12W Lamps			1456	0.16	0.07	233	104
250	DELTA UNIT BRAVO SIDE	PIPE CHASE	1	53	4' Industrial Surface Mounted Fluorescent, (2) 48", T-8 lamp, Instant Start Ballast, NLO (BF: .85-.95) (No Diffuser)	1	24	Surface Mounted T8 LED Retrofit Lamp with External Driver LED 4' T8 Lamp (2) 12W Lamps			200	0.05	0.02	11	5
251	DELTA UNIT BRAVO SIDE	SHOWERS	8	30	2' Wraparound; Tamper-proof Surface Mounted Fluorescent, (2) 24", T-8 lamp, Instant Start Ballast, NLO (BF: .85-.95) Prismatic Acrylic Diffuser	8	16	Surface Mounted T8 LED Retrofit Lamp with External Driver LED 2' T8 Lamp (2) 8W Lamps			8760	0.24	0.13	2,087	1,110
252	DELTA UNIT BRAVO SIDE	SHOWERS	3	80	4' Wraparound; Tamper-proof Surface Mounted Fluorescent, (3) 48", T-8 lamp, Instant Start Ballast, NLO (BF: .85-.95) Prismatic Acrylic Diffuser	3	36	Surface Mounted T8 LED Retrofit Lamp with External Driver LED 4' T8 Lamp (3) 12W Lamps			8760	0.24	0.11	2,111	937
253	DELTA UNIT BRAVO SIDE	UPPER SHOWERS	5	30	2' Wraparound; Tamper-proof Surface Mounted Fluorescent, (2) 24", T-8 lamp, Instant Start Ballast, NLO (BF: .85-.95) Prismatic Acrylic Diffuser	5	16	Surface Mounted T8 LED Retrofit Lamp with External Driver LED 2' T8 Lamp (2) 8W Lamps			8760	0.15	0.08	1,304	694
254	DELTA UNIT BRAVO SIDE	UPPER SHOWERS	1	53	4' Wraparound; Tamper-proof Surface Mounted Fluorescent, (2) 48", T-8 lamp, Instant Start Ballast, NLO (BF: .85-.95) Prismatic Acrylic Diffuser	1	24	Surface Mounted T8 LED Retrofit Lamp with External Driver LED 4' T8 Lamp (2) 12W Lamps			8760	0.05	0.02	466	208
255	DELTA UNIT BRAVO SIDE	STORAGE ROOM	1	80	2'x4' Troffer Recessed Fluorescent, (3) 48", T-8 lamp, Instant Start Ballast, NLO (BF: .85-.95) Prismatic Acrylic Diffuser	1	36	Recessed T8 LED Retrofit Lamp with External Driver LED 4' T8 Lamp (3) 12W Lamps			520	0.08	0.04	42	19
256	DELTA UNIT BRAVO SIDE	STAIRWELL	4	53	4' Wraparound; Tamper-proof Surface Mounted Fluorescent, (2) 48", T-8 lamp, Instant Start Ballast, NLO (BF: .85-.95) Prismatic Acrylic Diffuser	4	24	Surface Mounted T8 LED Retrofit Lamp with External Driver LED 4' T8 Lamp (2) 12W Lamps			8760	0.21	0.10	1,866	833
257	DELTA UNIT BRAVO SIDE	STAIRWELL	1	19	Universal Face Exit Sign Surface Mounted EXIT Compact Fluorescent, (2) 7W lamp (No Diffuser)	1	9	Surface Mounted Upgrade EXIT Sign LED Light Fixture. (1) 9W			8760	0.02	0.01	166	78
258	ECHO UNIT COMMON	ENTRY VESTIBULE	1	53	4' Wraparound; Tamper-proof Surface Mounted Fluorescent, (2) 48", T-8 lamp, Instant Start Ballast, NLO (BF: .85-.95) Prismatic Acrylic Diffuser	1	24	Surface Mounted T8 LED Retrofit Lamp with External Driver LED 4' T8 Lamp (2) 12W Lamps			8760	0.05	0.02	466	208
259	ECHO UNIT COMMON	ALPHA LOBBY	3	266	2'x2' Troffer; Tamper-proof Recessed Metal Halide, (1) 250W lamp Prismatic Acrylic Diffuser	3	49	Recessed Chip On Board (COB) Type Screw-in / Bypass Existing Ballast Light Emitting Diode Lamp, Screw-in, (1) 54W lamp - HIGH			8760	0.80	0.15	6,997	1,277
260	ECHO UNIT COMMON	ALPHA LOBBY	1	19	Universal Face Exit Sign Surface Mounted EXIT Compact Fluorescent, (2) 7W lamp (No Diffuser)	1	9	Surface Mounted Upgrade EXIT Sign LED Light Fixture. (1) 9W			8760	0.02	0.01	166	78
261	ECHO UNIT COMMON	MAINTENANCE ROOM	2	53	4' Wraparound; Tamper-proof Surface Mounted Fluorescent, (2) 48", T-8 lamp, Instant Start Ballast, NLO (BF: .85-.95) Prismatic Acrylic Diffuser	2	24	Surface Mounted T8 LED Retrofit Lamp with External Driver LED 4' T8 Lamp (2) 12W Lamps			520	0.11	0.05	55	25
262	ECHO UNIT COMMON	OFFICE	1	53	4' Wraparound; Tamper-proof Surface Mounted Fluorescent, (2) 48", T-8 lamp, Instant Start Ballast, NLO (BF: .85-.95) Prismatic Acrylic Diffuser	1	24	Surface Mounted T8 LED Retrofit Lamp with External Driver LED 4' T8 Lamp (2) 12W Lamps			3640	0.05	0.02	194	86
263	ECHO UNIT COMMON	STAFF RESTROOM	1	53	4' Wraparound; Tamper-proof Surface Mounted Fluorescent, (2) 48", T-8 lamp, Instant Start Ballast, NLO (BF: .85-.95) Prismatic Acrylic Diffuser	1	24	Surface Mounted T8 LED Retrofit Lamp with External Driver LED 4' T8 Lamp (2) 12W Lamps			1456	0.05	0.02	78	35
264	ECHO UNIT COMMON	CUSTODIAL CLOSET	1	53	4' Wraparound; Tamper-proof Surface Mounted Fluorescent, (2) 48", T-8 lamp, Instant Start Ballast, NLO (BF: .85-.95) Prismatic Acrylic Diffuser	1	24	Surface Mounted T8 LED Retrofit Lamp with External Driver LED 4' T8 Lamp (2) 12W Lamps			1456	0.05	0.02	78	35
265	ECHO UNIT COMMON	STAIRWELL / OPEN OFFICE	3	53	4' Wraparound; Tamper-proof Surface Mounted Fluorescent, (2) 48", T-8 lamp, Instant Start Ballast, NLO (BF: .85-.95) Prismatic Acrylic Diffuser	3	24	Surface Mounted T8 LED Retrofit Lamp with External Driver LED 4' T8 Lamp (2) 12W Lamps			8760	0.16	0.07	1,399	624
266	ECHO UNIT COMMON	STAIRWELL / OPEN OFFICE	1	3	Universal Face Exit Sign Surface Mounted EXIT Light Emitting Diode, (1) 3W lamp, Single Sided (No Diffuser)	1	3	Existing luminaire to remain as is No Retrofit. To remain as is.			8760	0.00	0.00	25	25
267	ECHO UNIT COMMON	STAIRWELL / OPEN OFFICE	1	19	Universal Face Exit Sign Surface Mounted EXIT Compact Fluorescent, (2) 7W lamp (No Diffuser)	1	9	Surface Mounted Upgrade EXIT Sign LED Light Fixture. (1) 9W			8760	0.02	0.01	166	78
268	ECHO UNIT COMMON	OPEN OFFICE	12	80	2'x4' Troffer Recessed Flanged Fluorescent, (3) 48", T-8 lamp, Instant Start Ballast, NLO (BF: .85-.95) Deep Cell Parabolic Diffuser	12	36	Recessed Flanged T8 LED Retrofit Lamp with External Driver LED 4' T8 Lamp (3) 12W Lamps			8760	0.96	0.43	8,444	3,746
269	ECHO UNIT COMMON	PIPE CHASE	1	53	4' Industrial Surface Mounted Fluorescent, (2) 48", T-8 lamp, Instant Start Ballast, NLO (BF: .85-.95) (No Diffuser)	1	24	Surface Mounted T8 LED Retrofit Lamp with External Driver LED 4' T8 Lamp (2) 12W Lamps			520	0.05	0.02	28	12

Line #	Facility Area	Space	Pre Fixture Qty	Pre Watts/ Fixt	Pre Description	Post Fixture Qty	Post Watt/ Fixt	Post Description	Wallswitch Sensor	Ceiling Sensor	Hours of Operation	Base kW	Proposed kW	Base kWh	Proposed kWh
270	ECHO UNIT COMMON	OFFICE	2	80	2'x4' Troffer Recessed Flanged Fluorescent, (3) 48", T-8 lamp, Instant Start Ballast, NLO (BF: .85-.95) Deep Cell Parabolic Diffuser	2	36	Recessed Flanged T8 LED Retrofit Lamp with External Driver LED 4' T8 Lamp (3) 12W Lamps			3640	0.16	0.07	585	259
271	ECHO UNIT COMMON	OFFICE	4	80	2'x4' Troffer Recessed Flanged Fluorescent, (3) 48", T-8 lamp, Instant Start Ballast, NLO (BF: .85-.95) Prismatic Acrylic Diffuser	4	36	Recessed Flanged T8 LED Retrofit Lamp with External Driver LED 4' T8 Lamp (3) 12W Lamps			3640	0.32	0.14	1,169	519
272	ECHO UNIT COMMON	OFFICE	2	80	2'x4' Troffer Recessed Flanged Fluorescent, (3) 48", T-8 lamp, Instant Start Ballast, NLO (BF: .85-.95) Prismatic Acrylic Diffuser	2	36	Recessed Flanged T8 LED Retrofit Lamp with External Driver LED 4' T8 Lamp (3) 12W Lamps			3640	0.16	0.07	585	259
273	ECHO UNIT COMMON	STORAGE ROOM	1	80	2'x4' Troffer Recessed Flanged Fluorescent, (3) 48", T-8 lamp, Instant Start Ballast, NLO (BF: .85-.95) Prismatic Acrylic Diffuser	1	36	Recessed Flanged T8 LED Retrofit Lamp with External Driver LED 4' T8 Lamp (3) 12W Lamps			1560	0.08	0.04	125	56
274	ECHO UNIT COMMON	PIPE CHASE	1	53	4' Industrial Surface Mounted Fluorescent, (2) 48", T-8 lamp, Instant Start Ballast, NLO (BF: .85-.95) (No Diffuser)	1	24	Surface Mounted T8 LED Retrofit Lamp with External Driver LED 4' T8 Lamp (2) 12W Lamps			520	0.05	0.02	28	12
275	ECHO UNIT COMMON	BACK STAIRWELL	6	53	4' Wraparound; Tamper-proof Wall Mounted Fluorescent, (2) 48", T-8 lamp, Instant Start Ballast, NLO (BF: .85-.95) Prismatic Acrylic Diffuser	6	24	Wall Mounted T8 LED Retrofit Lamp with External Driver LED 4' T8 Lamp (2) 12W Lamps			8760	0.32	0.14	2,799	1,249
276	ECHO UNIT COMMON	MECHANICAL ROOM	12	53	4' Industrial Surface Mounted Fluorescent, (2) 48", T-8 lamp, Instant Start Ballast, NLO (BF: .85-.95) (No Diffuser)	12	24	Surface Mounted T8 LED Retrofit Lamp with External Driver LED 4' T8 Lamp (2) 12W Lamps			520	0.64	0.29	332	148
277	ECHO UNIT COMMON	MECHANICAL ROOM	3	19	Universal Face Exit Sign Surface Mounted EXIT Compact Fluorescent, (2) 7W lamp (No Diffuser)	3	9	Surface Mounted Upgrade EXIT Sign LED Light Fixture. (1) 9W			8760	0.06	0.03	498	234
278	ECHO UNIT COMMON	EXTERIOR ELECTRICAL ROOM	3	53	4' Industrial Surface Mounted Fluorescent, (2) 48", T-8 lamp, Instant Start Ballast, NLO (BF: .85-.95) (No Diffuser)	3	24	Surface Mounted T8 LED Retrofit Lamp with External Driver LED 4' T8 Lamp (2) 12W Lamps			520	0.16	0.07	83	37
279	ECHO UNIT COMMON	EXTERIOR SECURITY DATA ROOM	1	53	4' Wraparound; Tamper-proof Surface Mounted Fluorescent, (2) 48", T-8 lamp, Instant Start Ballast, NLO (BF: .85-.95) Prismatic Acrylic Diffuser	1	24	Surface Mounted T8 LED Retrofit Lamp with External Driver LED 4' T8 Lamp (2) 12W Lamps			520	0.05	0.02	28	12
280	ECHO UNIT ALPHA SIDE	EA DAYROOM	22	266	2'x2' Troffer; Tamper-proof Recessed Metal Halide, (1) 250W lamp Prismatic Acrylic Diffuser	22	49	Recessed Chip On Board (COB) Type Screw-in / Bypass Existing Ballast Light Emitting Diode Lamp, Screw-in, (1) 54W lamp - HIGH			8760	5.86	1.07	51,309	9,366
281	ECHO UNIT ALPHA SIDE	EA DAYROOM	7	53	4' Corner Vanity; Tamper-proof Wall Mounted Fluorescent, (2) 48", T-8 lamp, Instant Start Ballast, NLO (BF: .85-.95) Prismatic Acrylic Diffuser	7	24	Wall Mounted T8 LED Retrofit Lamp with External Driver LED 4' T8 Lamp (2) 12W Lamps			8760	0.37	0.17	3,265	1,457
282	ECHO UNIT ALPHA SIDE	EA DAYROOM	1	53	4' Wraparound; Tamper-proof Surface Mounted Fluorescent, (2) 48", T-8 lamp, Instant Start Ballast, NLO (BF: .85-.95) Prismatic Acrylic Diffuser	1	24	Surface Mounted T8 LED Retrofit Lamp with External Driver LED 4' T8 Lamp (2) 12W Lamps			8760	0.05	0.02	466	208
283	ECHO UNIT ALPHA SIDE	EA DAYROOM	1	53	4' Wraparound; Tamper-proof Wall Mounted Fluorescent, (2) 48", T-8 lamp, Instant Start Ballast, NLO (BF: .85-.95) Prismatic Acrylic Diffuser	1	24	Wall Mounted T8 LED Retrofit Lamp with External Driver LED 4' T8 Lamp (2) 12W Lamps			8760	0.05	0.02	466	208
284	ECHO UNIT ALPHA SIDE	EA DAYROOM	3	98	8' Vapor Proof Surface Mounted Fluorescent, (2) 96", T-8 lamp, Instant Start Ballast, NLO (BF: .85-.95) Vapor Proof Gasketed Diffuser	3	98	Existing luminaire to remain as is No Retrofit. To remain as is.			0	0.30	0.30	-	-
285	ECHO UNIT ALPHA SIDE	EA DAYROOM	3	19	Universal Face Exit Sign Surface Mounted EXIT Compact Fluorescent, (2) 7W lamp (No Diffuser)	3	9	Surface Mounted Upgrade EXIT Sign LED Light Fixture. (1) 9W			8760	0.06	0.03	498	234
286	ECHO UNIT ALPHA SIDE	EA CELLS 1-64	64	80	4' Wraparound; Tamper-proof Surface Mounted Fluorescent, (3) 48", T-8 lamp, Instant Start Ballast, NLO (BF: .85-.95) Prismatic Acrylic Diffuser	64	36	Surface Mounted T8 LED Retrofit Lamp with External Driver LED 4' T8 Lamp (3) 12W Lamps			2912	5.14	2.28	14,970	6,642
287	ECHO UNIT ALPHA SIDE	DORM ONE	4	53	4' Wraparound; Tamper-proof Surface Mounted Fluorescent, (2) 48", T-8 lamp, Instant Start Ballast, NLO (BF: .85-.95) Prismatic Acrylic Diffuser	4	24	Surface Mounted T8 LED Retrofit Lamp with External Driver LED 4' T8 Lamp (2) 12W Lamps			2912	0.21	0.10	620	277
288	ECHO UNIT ALPHA SIDE	DORM TWO	5	53	4' Wraparound; Tamper-proof Surface Mounted Fluorescent, (2) 48", T-8 lamp, Instant Start Ballast, NLO (BF: .85-.95) Prismatic Acrylic Diffuser	5	24	Surface Mounted T8 LED Retrofit Lamp with External Driver LED 4' T8 Lamp (2) 12W Lamps			2912	0.27	0.12	775	346
289	ECHO UNIT ALPHA SIDE	STAFF RESTROOM	1	53	4' Wraparound; Tamper-proof Surface Mounted Fluorescent, (2) 48", T-8 lamp, Instant Start Ballast, NLO (BF: .85-.95) Prismatic Acrylic Diffuser	1	24	Surface Mounted T8 LED Retrofit Lamp with External Driver LED 4' T8 Lamp (2) 12W Lamps			1456	0.05	0.02	78	35
290	ECHO UNIT ALPHA SIDE	LAUNDRY CART ROOM	2	53	4' Wraparound; Tamper-proof Surface Mounted Fluorescent, (2) 48", T-8 lamp, Instant Start Ballast, NLO (BF: .85-.95) Prismatic Acrylic Diffuser	2	24	Surface Mounted T8 LED Retrofit Lamp with External Driver LED 4' T8 Lamp (2) 12W Lamps			1456	0.11	0.05	155	69
291	ECHO UNIT ALPHA SIDE	CUSTODIAL CLOSET	1	30	2' Wraparound; Tamper-proof Surface Mounted Fluorescent, (2) 24", T-8 lamp, Instant Start Ballast, NLO (BF: .85-.95) Prismatic Acrylic Diffuser	1	16	Surface Mounted T8 LED Retrofit Lamp with External Driver LED 2' T8 Lamp (2) 8W Lamps			1456	0.03	0.02	43	23
292	ECHO UNIT ALPHA SIDE	CUSTODIAL SUPPLY	3	53	4' Industrial Surface Mounted Fluorescent, (2) 48", T-8 lamp, Instant Start Ballast, NLO (BF: .85-.95) (No Diffuser)	3	24	Surface Mounted T8 LED Retrofit Lamp with External Driver LED 4' T8 Lamp (2) 12W Lamps			1456	0.16	0.07	233	104
293	ECHO UNIT ALPHA SIDE	PIPE CHASE	1	53	4' Industrial Surface Mounted Fluorescent, (2) 48", T-8 lamp, Instant Start Ballast, NLO (BF: .85-.95) (No Diffuser)	1	24	Surface Mounted T8 LED Retrofit Lamp with External Driver LED 4' T8 Lamp (2) 12W Lamps			200	0.05	0.02	11	5
294	ECHO UNIT ALPHA SIDE	SHOWERS	8	30	2' Wraparound; Tamper-proof Surface Mounted Fluorescent, (2) 24", T-8 lamp, Instant Start Ballast, NLO (BF: .85-.95) Prismatic Acrylic Diffuser	8	16	Surface Mounted T8 LED Retrofit Lamp with External Driver LED 2' T8 Lamp (2) 8W Lamps			8760	0.24	0.13	2,087	1,110
295	ECHO UNIT ALPHA SIDE	SHOWERS	3	80	4' Wraparound; Tamper-proof Surface Mounted Fluorescent, (3) 48", T-8 lamp, Instant Start Ballast, NLO (BF: .85-.95) Prismatic Acrylic Diffuser	3	36	Surface Mounted T8 LED Retrofit Lamp with External Driver LED 4' T8 Lamp (3) 12W Lamps			8760	0.24	0.11	2,111	937
296	ECHO UNIT ALPHA SIDE	UPPER SHOWERS	5	30	2' Wraparound; Tamper-proof Surface Mounted Fluorescent, (2) 24", T-8 lamp, Instant Start Ballast, NLO (BF: .85-.95) Prismatic Acrylic Diffuser	5	16	Surface Mounted T8 LED Retrofit Lamp with External Driver LED 2' T8 Lamp (2) 8W Lamps			8760	0.15	0.08	1,304	694
297	ECHO UNIT ALPHA SIDE	UPPER SHOWERS	1	53	4' Wraparound; Tamper-proof Surface Mounted Fluorescent, (2) 48", T-8 lamp, Instant Start Ballast, NLO (BF: .85-.95) Prismatic Acrylic Diffuser	1	24	Surface Mounted T8 LED Retrofit Lamp with External Driver LED 4' T8 Lamp (2) 12W Lamps			8760	0.05	0.02	466	208
298	ECHO UNIT ALPHA SIDE	STORAGE ROOM	1	80	2'x4' Troffer Recessed Fluorescent, (3) 48", T-8 lamp, Instant Start Ballast, NLO (BF: .85-.95) Prismatic Acrylic Diffuser	1	36	Recessed T8 LED Retrofit Lamp with External Driver LED 4' T8 Lamp (3) 12W Lamps			520	0.08	0.04	42	19
299	ECHO UNIT ALPHA SIDE	STAIRWELL	4	53	4' Wraparound; Tamper-proof Surface Mounted Fluorescent, (2) 48", T-8 lamp, Instant Start Ballast, NLO (BF: .85-.95) Prismatic Acrylic Diffuser	4	24	Surface Mounted T8 LED Retrofit Lamp with External Driver LED 4' T8 Lamp (2) 12W Lamps			8760	0.21	0.10	1,866	833

Line #	Facility Area	Space	Pre Fixture Qty	Pre Watts/ Fixt	Pre Description	Post Fixture Qty	Post Watt/ Fixt	Post Description	Wallswitch Sensor	Ceiling Sensor	Hours of Operation	Base kW	Proposed kW	Base kWh	Proposed kWh
300	ECHO UNIT ALPHA SIDE	STAIRWELL	1	19	Universal Face Exit Sign Surface Mounted EXIT Compact Fluorescent, (2) 7W lamp (No Diffuser)	1	9	Surface Mounted Upgrade EXIT Sign LED Light Fixture. (1) 9W			8760	0.02	0.01	166	78
301	ECHO UNIT BRAVO SIDE	EB DAYROOM	22	266	2'x2' Troffer; Tamper-proof Recessed Metal Halide, (1) 250W lamp Prismatic Acrylic Diffuser	22	49	Recessed Chip On Board (COB) Type Screw-in / Bypass Existing Ballast Light Emitting Diode Lamp, Screw-in, (1) 54W lamp - HIGH			8760	5.86	1.07	51,309	9,366
302	ECHO UNIT BRAVO SIDE	EB DAYROOM	7	53	4' Corner Vanity; Tamper-proof Wall Mounted Fluorescent, (2) 48", T-8 lamp, Instant Start Ballast, NLO (BF: .85-.95) Prismatic Acrylic Diffuser	7	24	Wall Mounted T8 LED Retrofit Lamp with External Driver LED 4' T8 Lamp (2) 12W Lamps			8760	0.37	0.17	3,265	1,457
303	ECHO UNIT BRAVO SIDE	EB DAYROOM	1	53	4' Wraparound; Tamper-proof Surface Mounted Fluorescent, (2) 48", T-8 lamp, Instant Start Ballast, NLO (BF: .85-.95) Prismatic Acrylic Diffuser	1	24	Surface Mounted T8 LED Retrofit Lamp with External Driver LED 4' T8 Lamp (2) 12W Lamps			8760	0.05	0.02	466	208
304	ECHO UNIT BRAVO SIDE	EB DAYROOM	1	53	4' Wraparound; Tamper-proof Wall Mounted Fluorescent, (2) 48", T-8 lamp, Instant Start Ballast, NLO (BF: .85-.95) Prismatic Acrylic Diffuser	1	24	Wall Mounted T8 LED Retrofit Lamp with External Driver LED 4' T8 Lamp (2) 12W Lamps			8760	0.05	0.02	466	208
305	ECHO UNIT BRAVO SIDE	EB DAYROOM	3	98	8' Vapor Proof Surface Mounted Fluorescent, (2) 96", T-8 lamp, Instant Start Ballast, NLO (BF: .85-.95) Vapor Proof Gasketed Diffuser	3	98	Existing luminaire to remain as is No Retrofit. To remain as is.			0	0.30	0.30	-	-
306	ECHO UNIT BRAVO SIDE	EB DAYROOM	3	19	Universal Face Exit Sign Surface Mounted EXIT Compact Fluorescent, (2) 7W lamp (No Diffuser)	3	9	Surface Mounted Upgrade EXIT Sign LED Light Fixture. (1) 9W			8760	0.06	0.03	498	234
307	ECHO UNIT BRAVO SIDE	EB CELLS 1-64	64	80	4' Wraparound; Tamper-proof Surface Mounted Fluorescent, (3) 48", T-8 lamp, Instant Start Ballast, NLO (BF: .85-.95) Prismatic Acrylic Diffuser	64	36	Surface Mounted T8 LED Retrofit Lamp with External Driver LED 4' T8 Lamp (3) 12W Lamps			2912	5.14	2.28	14,970	6,642
308	ECHO UNIT BRAVO SIDE	DORM ONE	4	53	4' Wraparound; Tamper-proof Surface Mounted Fluorescent, (2) 48", T-8 lamp, Instant Start Ballast, NLO (BF: .85-.95) Prismatic Acrylic Diffuser	4	24	Surface Mounted T8 LED Retrofit Lamp with External Driver LED 4' T8 Lamp (2) 12W Lamps			2912	0.21	0.10	620	277
309	ECHO UNIT BRAVO SIDE	DORM TWO	5	53	4' Wraparound; Tamper-proof Surface Mounted Fluorescent, (2) 48", T-8 lamp, Instant Start Ballast, NLO (BF: .85-.95) Prismatic Acrylic Diffuser	5	24	Surface Mounted T8 LED Retrofit Lamp with External Driver LED 4' T8 Lamp (2) 12W Lamps			2912	0.27	0.12	775	346
310	ECHO UNIT BRAVO SIDE	STAFF RESTROOM	1	53	4' Wraparound; Tamper-proof Surface Mounted Fluorescent, (2) 48", T-8 lamp, Instant Start Ballast, NLO (BF: .85-.95) Prismatic Acrylic Diffuser	1	24	Surface Mounted T8 LED Retrofit Lamp with External Driver LED 4' T8 Lamp (2) 12W Lamps			1456	0.05	0.02	78	35
311	ECHO UNIT BRAVO SIDE	LAUNDRY CART ROOM	2	53	4' Wraparound; Tamper-proof Surface Mounted Fluorescent, (2) 48", T-8 lamp, Instant Start Ballast, NLO (BF: .85-.95) Prismatic Acrylic Diffuser	2	24	Surface Mounted T8 LED Retrofit Lamp with External Driver LED 4' T8 Lamp (2) 12W Lamps			1456	0.11	0.05	155	69
312	ECHO UNIT BRAVO SIDE	CUSTODIAL CLOSET	1	30	2' Wraparound; Tamper-proof Surface Mounted Fluorescent, (2) 24", T-8 lamp, Instant Start Ballast, NLO (BF: .85-.95) Prismatic Acrylic Diffuser	1	16	Surface Mounted T8 LED Retrofit Lamp with External Driver LED 2' T8 Lamp (2) 8W Lamps			1456	0.03	0.02	43	23
313	ECHO UNIT BRAVO SIDE	CUSTODIAL SUPPLY	3	53	4' Industrial Surface Mounted Fluorescent, (2) 48", T-8 lamp, Instant Start Ballast, NLO (BF: .85-.95) (No Diffuser)	3	24	Surface Mounted T8 LED Retrofit Lamp with External Driver LED 4' T8 Lamp (2) 12W Lamps			1456	0.16	0.07	233	104
314	ECHO UNIT BRAVO SIDE	PIPE CHASE	1	53	4' Industrial Surface Mounted Fluorescent, (2) 48", T-8 lamp, Instant Start Ballast, NLO (BF: .85-.95) (No Diffuser)	1	24	Surface Mounted T8 LED Retrofit Lamp with External Driver LED 4' T8 Lamp (2) 12W Lamps			200	0.05	0.02	11	5
315	ECHO UNIT BRAVO SIDE	SHOWERS	8	30	2' Wraparound; Tamper-proof Surface Mounted Fluorescent, (2) 24", T-8 lamp, Instant Start Ballast, NLO (BF: .85-.95) Prismatic Acrylic Diffuser	8	16	Surface Mounted T8 LED Retrofit Lamp with External Driver LED 2' T8 Lamp (2) 8W Lamps			8760	0.24	0.13	2,087	1,110
316	ECHO UNIT BRAVO SIDE	SHOWERS	3	80	4' Wraparound; Tamper-proof Surface Mounted Fluorescent, (3) 48", T-8 lamp, Instant Start Ballast, NLO (BF: .85-.95) Prismatic Acrylic Diffuser	3	36	Surface Mounted T8 LED Retrofit Lamp with External Driver LED 4' T8 Lamp (3) 12W Lamps			8760	0.24	0.11	2,111	937
317	ECHO UNIT BRAVO SIDE	UPPER SHOWERS	5	30	2' Wraparound; Tamper-proof Surface Mounted Fluorescent, (2) 24", T-8 lamp, Instant Start Ballast, NLO (BF: .85-.95) Prismatic Acrylic Diffuser	5	16	Surface Mounted T8 LED Retrofit Lamp with External Driver LED 2' T8 Lamp (2) 8W Lamps			8760	0.15	0.08	1,304	694
318	ECHO UNIT BRAVO SIDE	UPPER SHOWERS	1	53	4' Wraparound; Tamper-proof Surface Mounted Fluorescent, (2) 48", T-8 lamp, Instant Start Ballast, NLO (BF: .85-.95) Prismatic Acrylic Diffuser	1	24	Surface Mounted T8 LED Retrofit Lamp with External Driver LED 4' T8 Lamp (2) 12W Lamps			8760	0.05	0.02	466	208
319	ECHO UNIT BRAVO SIDE	STORAGE ROOM	1	80	2'x4' Troffer Recessed Fluorescent, (3) 48", T-8 lamp, Instant Start Ballast, NLO (BF: .85-.95) Prismatic Acrylic Diffuser	1	36	Recessed T8 LED Retrofit Lamp with External Driver LED 4' T8 Lamp (3) 12W Lamps			520	0.08	0.04	42	19
320	ECHO UNIT BRAVO SIDE	STAIRWELL	4	53	4' Wraparound; Tamper-proof Surface Mounted Fluorescent, (2) 48", T-8 lamp, Instant Start Ballast, NLO (BF: .85-.95) Prismatic Acrylic Diffuser	4	24	Surface Mounted T8 LED Retrofit Lamp with External Driver LED 4' T8 Lamp (2) 12W Lamps			8760	0.21	0.10	1,866	833
321	ECHO UNIT BRAVO SIDE	STAIRWELL	1	19	Universal Face Exit Sign Surface Mounted EXIT Compact Fluorescent, (2) 7W lamp (No Diffuser)	1	9	Surface Mounted Upgrade EXIT Sign LED Light Fixture. (1) 9W			8760	0.02	0.01	166	78
322	FOXTROT UNIT COMMON	ENTRY VESTIBULE	1	53	4' Wraparound; Tamper-proof Surface Mounted Fluorescent, (2) 48", T-8 lamp, Instant Start Ballast, NLO (BF: .85-.95) Prismatic Acrylic Diffuser	1	24	Surface Mounted T8 LED Retrofit Lamp with External Driver LED 4' T8 Lamp (2) 12W Lamps			8760	0.05	0.02	466	208
323	FOXTROT UNIT COMMON	ALPHA LOBBY	3	266	2'x2' Troffer; Tamper-proof Recessed Metal Halide, (1) 250W lamp Prismatic Acrylic Diffuser	3	49	Recessed Chip On Board (COB) Type Screw-in / Bypass Existing Ballast Light Emitting Diode Lamp, Screw-in, (1) 54W lamp - HIGH			8760	0.80	0.15	6,997	1,277
324	FOXTROT UNIT COMMON	ALPHA LOBBY	1	19	Universal Face Exit Sign Surface Mounted EXIT Compact Fluorescent, (2) 7W lamp (No Diffuser)	1	9	Surface Mounted Upgrade EXIT Sign LED Light Fixture. (1) 9W			8760	0.02	0.01	166	78
325	FOXTROT UNIT COMMON	MAINTENANCE ROOM	2	53	4' Wraparound; Tamper-proof Surface Mounted Fluorescent, (2) 48", T-8 lamp, Instant Start Ballast, NLO (BF: .85-.95) Prismatic Acrylic Diffuser	2	24	Surface Mounted T8 LED Retrofit Lamp with External Driver LED 4' T8 Lamp (2) 12W Lamps			520	0.11	0.05	55	25
326	FOXTROT UNIT COMMON	OFFICE	1	53	4' Wraparound; Tamper-proof Surface Mounted Fluorescent, (2) 48", T-8 lamp, Instant Start Ballast, NLO (BF: .85-.95) Prismatic Acrylic Diffuser	1	24	Surface Mounted T8 LED Retrofit Lamp with External Driver LED 4' T8 Lamp (2) 12W Lamps			3640	0.05	0.02	194	86
327	FOXTROT UNIT COMMON	STAFF RESTROOM	1	53	4' Wraparound; Tamper-proof Surface Mounted Fluorescent, (2) 48", T-8 lamp, Instant Start Ballast, NLO (BF: .85-.95) Prismatic Acrylic Diffuser	1	24	Surface Mounted T8 LED Retrofit Lamp with External Driver LED 4' T8 Lamp (2) 12W Lamps			1456	0.05	0.02	78	35
328	FOXTROT UNIT COMMON	CUSTODIAL CLOSET	1	53	4' Wraparound; Tamper-proof Surface Mounted Fluorescent, (2) 48", T-8 lamp, Instant Start Ballast, NLO (BF: .85-.95) Prismatic Acrylic Diffuser	1	24	Surface Mounted T8 LED Retrofit Lamp with External Driver LED 4' T8 Lamp (2) 12W Lamps			1456	0.05	0.02	78	35
329	FOXTROT UNIT COMMON	STAIRWELL / OPEN OFFICE	3	53	4' Wraparound; Tamper-proof Surface Mounted Fluorescent, (2) 48", T-8 lamp, Instant Start Ballast, NLO (BF: .85-.95) Prismatic Acrylic Diffuser	3	24	Surface Mounted T8 LED Retrofit Lamp with External Driver LED 4' T8 Lamp (2) 12W Lamps			8760	0.16	0.07	1,399	624

Line #	Facility Area	Space	Pre Fixture Qty	Pre Watts/ Fixt	Pre Description	Post Fixture Qty	Post Watt/ Fixt	Post Description	Wallswitch Sensor	Ceiling Sensor	Hours of Operation	Base kW	Proposed kW	Base kWh	Proposed kWh
330	FOXTROT UNIT COMMON	STAIRWELL / OPEN OFFICE	1	3	Universal Face Exit Sign Surface Mounted EXIT Light Emitting Diode, (1) 3W lamp, Single Sided (No Diffuser)	1	3	Existing luminaire to remain as is No Retrofit. To remain as is.			8760	0.00	0.00	25	25
331	FOXTROT UNIT COMMON	STAIRWELL / OPEN OFFICE	1	19	Universal Face Exit Sign Surface Mounted EXIT Compact Fluorescent, (2) 7W lamp (No Diffuser)	1	9	Surface Mounted Upgrade EXIT Sign LED Light Fixture. (1) 9W			8760	0.02	0.01	166	78
332	FOXTROT UNIT COMMON	OPEN OFFICE	12	80	2'x4' Troffer Recessed Flanged Fluorescent, (3) 48", T-8 lamp, Instant Start Ballast, NLO (BF: .85-.95) Deep Cell Parabolic Diffuser	12	36	Recessed Flanged T8 LED Retrofit Lamp with External Driver LED 4' T8 Lamp (3) 12W Lamps			8760	0.96	0.43	8,444	3,746
333	FOXTROT UNIT COMMON	PIPE CHASE	1	53	4' Industrial Surface Mounted Fluorescent, (2) 48", T-8 lamp, Instant Start Ballast, NLO (BF: .85-.95) (No Diffuser)	1	24	Surface Mounted T8 LED Retrofit Lamp with External Driver LED 4' T8 Lamp (2) 12W Lamps			520	0.05	0.02	28	12
334	FOXTROT UNIT COMMON	OFFICE	2	80	2'x4' Troffer Recessed Flanged Fluorescent, (3) 48", T-8 lamp, Instant Start Ballast, NLO (BF: .85-.95) Deep Cell Parabolic Diffuser	2	36	Recessed Flanged T8 LED Retrofit Lamp with External Driver LED 4' T8 Lamp (3) 12W Lamps			3640	0.16	0.07	585	259
335	FOXTROT UNIT COMMON	OFFICE	4	80	2'x4' Troffer Recessed Flanged Fluorescent, (3) 48", T-8 lamp, Instant Start Ballast, NLO (BF: .85-.95) Prismatic Acrylic Diffuser	4	36	Recessed Flanged T8 LED Retrofit Lamp with External Driver LED 4' T8 Lamp (3) 12W Lamps			3640	0.32	0.14	1,169	519
336	FOXTROT UNIT COMMON	OFFICE	2	80	2'x4' Troffer Recessed Flanged Fluorescent, (3) 48", T-8 lamp, Instant Start Ballast, NLO (BF: .85-.95) Prismatic Acrylic Diffuser	2	36	Recessed Flanged T8 LED Retrofit Lamp with External Driver LED 4' T8 Lamp (3) 12W Lamps			3640	0.16	0.07	585	259
337	FOXTROT UNIT COMMON	STORAGE ROOM	1	80	2'x4' Troffer Recessed Flanged Fluorescent, (3) 48", T-8 lamp, Instant Start Ballast, NLO (BF: .85-.95) Prismatic Acrylic Diffuser	1	36	Recessed Flanged T8 LED Retrofit Lamp with External Driver LED 4' T8 Lamp (3) 12W Lamps			1560	0.08	0.04	125	56
338	FOXTROT UNIT COMMON	PIPE CHASE	1	53	4' Industrial Surface Mounted Fluorescent, (2) 48", T-8 lamp, Instant Start Ballast, NLO (BF: .85-.95) (No Diffuser)	1	24	Surface Mounted T8 LED Retrofit Lamp with External Driver LED 4' T8 Lamp (2) 12W Lamps			520	0.05	0.02	28	12
339	FOXTROT UNIT COMMON	BACK STAIRWELL	6	53	4' Wraparound; Tamper-proof Wall Mounted Fluorescent, (2) 48", T-8 lamp, Instant Start Ballast, NLO (BF: .85-.95) Prismatic Acrylic Diffuser	6	24	Wall Mounted T8 LED Retrofit Lamp with External Driver LED 4' T8 Lamp (2) 12W Lamps			8760	0.32	0.14	2,799	1,249
340	FOXTROT UNIT COMMON	MECHANICAL ROOM	12	53	4' Industrial Surface Mounted Fluorescent, (2) 48", T-8 lamp, Instant Start Ballast, NLO (BF: .85-.95) (No Diffuser)	12	24	Surface Mounted T8 LED Retrofit Lamp with External Driver LED 4' T8 Lamp (2) 12W Lamps			520	0.64	0.29	332	148
341	FOXTROT UNIT COMMON	MECHANICAL ROOM	3	19	Universal Face Exit Sign Surface Mounted EXIT Compact Fluorescent, (2) 7W lamp (No Diffuser)	3	9	Surface Mounted Upgrade EXIT Sign LED Light Fixture. (1) 9W			8760	0.06	0.03	498	234
342	FOXTROT UNIT COMMON	EXTERIOR ELECTRICAL ROOM	3	53	4' Industrial Surface Mounted Fluorescent, (2) 48", T-8 lamp, Instant Start Ballast, NLO (BF: .85-.95) (No Diffuser)	3	24	Surface Mounted T8 LED Retrofit Lamp with External Driver LED 4' T8 Lamp (2) 12W Lamps			520	0.16	0.07	83	37
343	FOXTROT UNIT COMMON	EXTERIOR SECURITY DATA ROOM	1	53	4' Wraparound; Tamper-proof Surface Mounted Fluorescent, (2) 48", T-8 lamp, Instant Start Ballast, NLO (BF: .85-.95) Prismatic Acrylic Diffuser	1	24	Surface Mounted T8 LED Retrofit Lamp with External Driver LED 4' T8 Lamp (2) 12W Lamps			520	0.05	0.02	28	12
344	FOXTROT UNIT ALPHA SIDE	FA DAYROOM	22	266	2'x2' Troffer; Tamper-proof Recessed Metal Halide, (1) 250W lamp Prismatic Acrylic Diffuser	22	49	Recessed Chip On Board (COB) Type Screw-in / Bypass Existing Ballast Light Emitting Diode Lamp, Screw-in, (1) 54W lamp - HIGH			8760	5.86	1.07	51,309	9,366
345	FOXTROT UNIT ALPHA SIDE	FA DAYROOM	7	53	4' Corner Vanity; Tamper-proof Wall Mounted Fluorescent, (2) 48", T-8 lamp, Instant Start Ballast, NLO (BF: .85-.95) Prismatic Acrylic Diffuser	7	24	Wall Mounted T8 LED Retrofit Lamp with External Driver LED 4' T8 Lamp (2) 12W Lamps			8760	0.37	0.17	3,265	1,457
346	FOXTROT UNIT ALPHA SIDE	FA DAYROOM	1	53	4' Wraparound; Tamper-proof Surface Mounted Fluorescent, (2) 48", T-8 lamp, Instant Start Ballast, NLO (BF: .85-.95) Prismatic Acrylic Diffuser	1	24	Surface Mounted T8 LED Retrofit Lamp with External Driver LED 4' T8 Lamp (2) 12W Lamps			8760	0.05	0.02	466	208
347	FOXTROT UNIT ALPHA SIDE	FA DAYROOM	1	53	4' Wraparound; Tamper-proof Wall Mounted Fluorescent, (2) 48", T-8 lamp, Instant Start Ballast, NLO (BF: .85-.95) Prismatic Acrylic Diffuser	1	24	Wall Mounted T8 LED Retrofit Lamp with External Driver LED 4' T8 Lamp (2) 12W Lamps			8760	0.05	0.02	466	208
348	FOXTROT UNIT ALPHA SIDE	FA DAYROOM	3	98	8' Vapor Proof Surface Mounted Fluorescent, (2) 96", T-8 lamp, Instant Start Ballast, NLO (BF: .85-.95) Vapor Proof Gasketed Diffuser	3	98	Existing luminaire to remain as is No Retrofit. To remain as is.			0	0.30	0.30	-	-
349	FOXTROT UNIT ALPHA SIDE	FA DAYROOM	3	19	Universal Face Exit Sign Surface Mounted EXIT Compact Fluorescent, (2) 7W lamp (No Diffuser)	3	9	Surface Mounted Upgrade EXIT Sign LED Light Fixture. (1) 9W			8760	0.06	0.03	498	234
350	FOXTROT UNIT ALPHA SIDE	FA CELLS 1-64	64	80	4' Wraparound; Tamper-proof Surface Mounted Fluorescent, (3) 48", T-8 lamp, Instant Start Ballast, NLO (BF: .85-.95) Prismatic Acrylic Diffuser	64	36	Surface Mounted T8 LED Retrofit Lamp with External Driver LED 4' T8 Lamp (3) 12W Lamps			2912	5.14	2.28	14,970	6,642
351	FOXTROT UNIT ALPHA SIDE	DORM ONE	4	53	4' Wraparound; Tamper-proof Surface Mounted Fluorescent, (2) 48", T-8 lamp, Instant Start Ballast, NLO (BF: .85-.95) Prismatic Acrylic Diffuser	4	24	Surface Mounted T8 LED Retrofit Lamp with External Driver LED 4' T8 Lamp (2) 12W Lamps			2912	0.21	0.10	620	277
352	FOXTROT UNIT ALPHA SIDE	DORM TWO	5	53	4' Wraparound; Tamper-proof Surface Mounted Fluorescent, (2) 48", T-8 lamp, Instant Start Ballast, NLO (BF: .85-.95) Prismatic Acrylic Diffuser	5	24	Surface Mounted T8 LED Retrofit Lamp with External Driver LED 4' T8 Lamp (2) 12W Lamps			2912	0.27	0.12	775	346
353	FOXTROT UNIT ALPHA SIDE	STAFF RESTROOM	1	53	4' Wraparound; Tamper-proof Surface Mounted Fluorescent, (2) 48", T-8 lamp, Instant Start Ballast, NLO (BF: .85-.95) Prismatic Acrylic Diffuser	1	24	Surface Mounted T8 LED Retrofit Lamp with External Driver LED 4' T8 Lamp (2) 12W Lamps			1456	0.05	0.02	78	35
354	FOXTROT UNIT ALPHA SIDE	LAUNDRY CART ROOM	2	53	4' Wraparound; Tamper-proof Surface Mounted Fluorescent, (2) 48", T-8 lamp, Instant Start Ballast, NLO (BF: .85-.95) Prismatic Acrylic Diffuser	2	24	Surface Mounted T8 LED Retrofit Lamp with External Driver LED 4' T8 Lamp (2) 12W Lamps			1456	0.11	0.05	155	69
355	FOXTROT UNIT ALPHA SIDE	CUSTODIAL CLOSET	1	30	2' Wraparound; Tamper-proof Surface Mounted Fluorescent, (2) 24", T-8 lamp, Instant Start Ballast, NLO (BF: .85-.95) Prismatic Acrylic Diffuser	1	16	Surface Mounted T8 LED Retrofit Lamp with External Driver LED 2' T8 Lamp (2) 8W Lamps			1456	0.03	0.02	43	23
356	FOXTROT UNIT ALPHA SIDE	CUSTODIAL SUPPLY	3	53	4' Industrial Surface Mounted Fluorescent, (2) 48", T-8 lamp, Instant Start Ballast, NLO (BF: .85-.95) (No Diffuser)	3	24	Surface Mounted T8 LED Retrofit Lamp with External Driver LED 4' T8 Lamp (2) 12W Lamps			1456	0.16	0.07	233	104
357	FOXTROT UNIT ALPHA SIDE	PIPE CHASE	1	53	4' Industrial Surface Mounted Fluorescent, (2) 48", T-8 lamp, Instant Start Ballast, NLO (BF: .85-.95) (No Diffuser)	1	24	Surface Mounted T8 LED Retrofit Lamp with External Driver LED 4' T8 Lamp (2) 12W Lamps			200	0.05	0.02	11	5
358	FOXTROT UNIT ALPHA SIDE	SHOWERS	8	30	2' Wraparound; Tamper-proof Surface Mounted Fluorescent, (2) 24", T-8 lamp, Instant Start Ballast, NLO (BF: .85-.95) Prismatic Acrylic Diffuser	8	16	Surface Mounted T8 LED Retrofit Lamp with External Driver LED 2' T8 Lamp (2) 8W Lamps			8760	0.24	0.13	2,087	1,110
359	FOXTROT UNIT ALPHA SIDE	SHOWERS	3	80	4' Wraparound; Tamper-proof Surface Mounted Fluorescent, (3) 48", T-8 lamp, Instant Start Ballast, NLO (BF: .85-.95) Prismatic Acrylic Diffuser	3	36	Surface Mounted T8 LED Retrofit Lamp with External Driver LED 4' T8 Lamp (3) 12W Lamps			8760	0.24	0.11	2,111	937

Line #	Facility Area	Space	Pre Fixture Qty	Pre Watts/ Fixt	Pre Description	Post Fixture Qty	Post Watt/ Fixt	Post Description	Wallswitch Sensor	Ceiling Sensor	Hours of Operation	Base kW	Proposed kW	Base kWh	Proposed kWh
360	FOXTROT UNIT ALPHA SIDE	UPPER SHOWERS	5	30	2' Wraparound; Tamper-proof Surface Mounted Fluorescent, (2) 24", T-8 lamp, Instant Start Ballast, NLO (BF: .85-.95) Prismatic Acrylic Diffuser	5	16	Surface Mounted T8 LED Retrofit Lamp with External Driver LED 2' T8 Lamp (2) 8W Lamps			8760	0.15	0.08	1,304	694
361	FOXTROT UNIT ALPHA SIDE	UPPER SHOWERS	1	53	4' Wraparound; Tamper-proof Surface Mounted Fluorescent, (2) 48", T-8 lamp, Instant Start Ballast, NLO (BF: .85-.95) Prismatic Acrylic Diffuser	1	24	Surface Mounted T8 LED Retrofit Lamp with External Driver LED 4' T8 Lamp (2) 12W Lamps			8760	0.05	0.02	466	208
362	FOXTROT UNIT ALPHA SIDE	STORAGE ROOM	1	80	2'x4' Troffer Recessed Fluorescent, (3) 48", T-8 lamp, Instant Start Ballast, NLO (BF: .85-.95) Prismatic Acrylic Diffuser	1	36	Recessed T8 LED Retrofit Lamp with External Driver LED 4' T8 Lamp (3) 12W Lamps			520	0.08	0.04	42	19
363	FOXTROT UNIT ALPHA SIDE	STAIRWELL	4	53	4' Wraparound; Tamper-proof Surface Mounted Fluorescent, (2) 48", T-8 lamp, Instant Start Ballast, NLO (BF: .85-.95) Prismatic Acrylic Diffuser	4	24	Surface Mounted T8 LED Retrofit Lamp with External Driver LED 4' T8 Lamp (2) 12W Lamps			8760	0.21	0.10	1,866	833
364	FOXTROT UNIT ALPHA SIDE	STAIRWELL	1	19	Universal Face Exit Sign Surface Mounted EXIT Compact Fluorescent, (2) 7W lamp (No Diffuser)	1	9	Surface Mounted Upgrade EXIT Sign LED Light Fixture. (1) 9W			8760	0.02	0.01	166	78
365	FOXTROT UNIT BRAVO SIDE	FB DAYROOM	22	266	2'x2' Troffer; Tamper-proof Recessed Metal Halide, (1) 250W lamp Prismatic Acrylic Diffuser	22	49	Recessed Chip On Board (COB) Type Screw-in / Bypass Existing Ballast Light Emitting Diode Lamp, Screw-in, (1) 54W lamp - HIGH			8760	5.86	1.07	51,309	9,366
366	FOXTROT UNIT BRAVO SIDE	FB DAYROOM	7	53	4' Corner Vanity; Tamper-proof Wall Mounted Fluorescent, (2) 48", T-8 lamp, Instant Start Ballast, NLO (BF: .85-.95) Prismatic Acrylic Diffuser	7	24	Wall Mounted T8 LED Retrofit Lamp with External Driver LED 4' T8 Lamp (2) 12W Lamps			8760	0.37	0.17	3,265	1,457
367	FOXTROT UNIT BRAVO SIDE	FB DAYROOM	1	53	4' Wraparound; Tamper-proof Surface Mounted Fluorescent, (2) 48", T-8 lamp, Instant Start Ballast, NLO (BF: .85-.95) Prismatic Acrylic Diffuser	1	24	Surface Mounted T8 LED Retrofit Lamp with External Driver LED 4' T8 Lamp (2) 12W Lamps			8760	0.05	0.02	466	208
368	FOXTROT UNIT BRAVO SIDE	FB DAYROOM	1	53	4' Wraparound; Tamper-proof Wall Mounted Fluorescent, (2) 48", T-8 lamp, Instant Start Ballast, NLO (BF: .85-.95) Prismatic Acrylic Diffuser	1	24	Wall Mounted T8 LED Retrofit Lamp with External Driver LED 4' T8 Lamp (2) 12W Lamps			8760	0.05	0.02	466	208
369	FOXTROT UNIT BRAVO SIDE	FB DAYROOM	3	98	8' Vapor Proof Surface Mounted Fluorescent, (2) 96", T-8 lamp, Instant Start Ballast, NLO (BF: .85-.95) Vapor Proof Gasketed Diffuser	3	98	Existing luminaire to remain as is No Retrofit. To remain as is.			0	0.30	0.30	-	-
370	FOXTROT UNIT BRAVO SIDE	FB DAYROOM	3	19	Universal Face Exit Sign Surface Mounted EXIT Compact Fluorescent, (2) 7W lamp (No Diffuser)	3	9	Surface Mounted Upgrade EXIT Sign LED Light Fixture. (1) 9W			8760	0.06	0.03	498	234
371	FOXTROT UNIT BRAVO SIDE	FB CELLS 1-64	64	80	4' Wraparound; Tamper-proof Surface Mounted Fluorescent, (3) 48", T-8 lamp, Instant Start Ballast, NLO (BF: .85-.95) Prismatic Acrylic Diffuser	64	36	Surface Mounted T8 LED Retrofit Lamp with External Driver LED 4' T8 Lamp (3) 12W Lamps			2912	5.14	2.28	14,970	6,642
372	FOXTROT UNIT BRAVO SIDE	DORM ONE	4	53	4' Wraparound; Tamper-proof Surface Mounted Fluorescent, (2) 48", T-8 lamp, Instant Start Ballast, NLO (BF: .85-.95) Prismatic Acrylic Diffuser	4	24	Surface Mounted T8 LED Retrofit Lamp with External Driver LED 4' T8 Lamp (2) 12W Lamps			2912	0.21	0.10	620	277
373	FOXTROT UNIT BRAVO SIDE	DORM TWO	5	53	4' Wraparound; Tamper-proof Surface Mounted Fluorescent, (2) 48", T-8 lamp, Instant Start Ballast, NLO (BF: .85-.95) Prismatic Acrylic Diffuser	5	24	Surface Mounted T8 LED Retrofit Lamp with External Driver LED 4' T8 Lamp (2) 12W Lamps			2912	0.27	0.12	775	346
374	FOXTROT UNIT BRAVO SIDE	STAFF RESTROOM	1	53	4' Wraparound; Tamper-proof Surface Mounted Fluorescent, (2) 48", T-8 lamp, Instant Start Ballast, NLO (BF: .85-.95) Prismatic Acrylic Diffuser	1	24	Surface Mounted T8 LED Retrofit Lamp with External Driver LED 4' T8 Lamp (2) 12W Lamps			1456	0.05	0.02	78	35
375	FOXTROT UNIT BRAVO SIDE	LAUNDRY CART ROOM	2	53	4' Wraparound; Tamper-proof Surface Mounted Fluorescent, (2) 48", T-8 lamp, Instant Start Ballast, NLO (BF: .85-.95) Prismatic Acrylic Diffuser	2	24	Surface Mounted T8 LED Retrofit Lamp with External Driver LED 4' T8 Lamp (2) 12W Lamps			1456	0.11	0.05	155	69
376	FOXTROT UNIT BRAVO SIDE	CUSTODIAL CLOSET	1	30	2' Wraparound; Tamper-proof Surface Mounted Fluorescent, (2) 24", T-8 lamp, Instant Start Ballast, NLO (BF: .85-.95) Prismatic Acrylic Diffuser	1	16	Surface Mounted T8 LED Retrofit Lamp with External Driver LED 2' T8 Lamp (2) 8W Lamps			1456	0.03	0.02	43	23
377	FOXTROT UNIT BRAVO SIDE	CUSTODIAL SUPPLY	3	53	4' Industrial Surface Mounted Fluorescent, (2) 48", T-8 lamp, Instant Start Ballast, NLO (BF: .85-.95) (No Diffuser)	3	24	Surface Mounted T8 LED Retrofit Lamp with External Driver LED 4' T8 Lamp (2) 12W Lamps			1456	0.16	0.07	233	104
378	FOXTROT UNIT BRAVO SIDE	PIPE CHASE	1	53	4' Industrial Surface Mounted Fluorescent, (2) 48", T-8 lamp, Instant Start Ballast, NLO (BF: .85-.95) (No Diffuser)	1	24	Surface Mounted T8 LED Retrofit Lamp with External Driver LED 4' T8 Lamp (2) 12W Lamps			200	0.05	0.02	11	5
379	FOXTROT UNIT BRAVO SIDE	SHOWERS	8	30	2' Wraparound; Tamper-proof Surface Mounted Fluorescent, (2) 24", T-8 lamp, Instant Start Ballast, NLO (BF: .85-.95) Prismatic Acrylic Diffuser	8	16	Surface Mounted T8 LED Retrofit Lamp with External Driver LED 2' T8 Lamp (2) 8W Lamps			8760	0.24	0.13	2,087	1,110
380	FOXTROT UNIT BRAVO SIDE	SHOWERS	3	80	4' Wraparound; Tamper-proof Surface Mounted Fluorescent, (3) 48", T-8 lamp, Instant Start Ballast, NLO (BF: .85-.95) Prismatic Acrylic Diffuser	3	36	Surface Mounted T8 LED Retrofit Lamp with External Driver LED 4' T8 Lamp (3) 12W Lamps			8760	0.24	0.11	2,111	937
381	FOXTROT UNIT BRAVO SIDE	UPPER SHOWERS	5	30	2' Wraparound; Tamper-proof Surface Mounted Fluorescent, (2) 24", T-8 lamp, Instant Start Ballast, NLO (BF: .85-.95) Prismatic Acrylic Diffuser	5	16	Surface Mounted T8 LED Retrofit Lamp with External Driver LED 2' T8 Lamp (2) 8W Lamps			8760	0.15	0.08	1,304	694
382	FOXTROT UNIT BRAVO SIDE	UPPER SHOWERS	1	53	4' Wraparound; Tamper-proof Surface Mounted Fluorescent, (2) 48", T-8 lamp, Instant Start Ballast, NLO (BF: .85-.95) Prismatic Acrylic Diffuser	1	24	Surface Mounted T8 LED Retrofit Lamp with External Driver LED 4' T8 Lamp (2) 12W Lamps			8760	0.05	0.02	466	208
383	FOXTROT UNIT BRAVO SIDE	STORAGE ROOM	1	80	2'x4' Troffer Recessed Fluorescent, (3) 48", T-8 lamp, Instant Start Ballast, NLO (BF: .85-.95) Prismatic Acrylic Diffuser	1	36	Recessed T8 LED Retrofit Lamp with External Driver LED 4' T8 Lamp (3) 12W Lamps			520	0.08	0.04	42	19
384	FOXTROT UNIT BRAVO SIDE	STAIRWELL	4	53	4' Wraparound; Tamper-proof Surface Mounted Fluorescent, (2) 48", T-8 lamp, Instant Start Ballast, NLO (BF: .85-.95) Prismatic Acrylic Diffuser	4	24	Surface Mounted T8 LED Retrofit Lamp with External Driver LED 4' T8 Lamp (2) 12W Lamps			8760	0.21	0.10	1,866	833
385	FOXTROT UNIT BRAVO SIDE	STAIRWELL	1	19	Universal Face Exit Sign Surface Mounted EXIT Compact Fluorescent, (2) 7W lamp (No Diffuser)	1	9	Surface Mounted Upgrade EXIT Sign LED Light Fixture. (1) 9W			8760	0.02	0.01	166	78
386	GOLF UNIT BRAVO SIDE	ENTRY VESTIBULE	1	53	4' Wraparound; Tamper-proof Surface Mounted Fluorescent, (2) 48", T-8 lamp, Instant Start Ballast, NLO (BF: .85-.95) Prismatic Acrylic Diffuser	1	24	Surface Mounted T8 LED Retrofit Lamp with External Driver LED 4' T8 Lamp (2) 12W Lamps			8760	0.05	0.02	466	208
387	GOLF UNIT BRAVO SIDE	BRAVO SIDE OPEN DAY ROOM	12	266	2'x2' Troffer; Tamper-proof Recessed Metal Halide, (1) 250W lamp Prismatic Acrylic Diffuser	12	49	Recessed Chip On Board (COB) Type Screw-in / Bypass Existing Ballast Light Emitting Diode Lamp, Screw-in, (1) 54W lamp			8760	3.19	0.58	27,987	5,109
388	GOLF UNIT BRAVO SIDE	BRAVO SIDE OPEN DAY ROOM	2	19	Universal Face Exit Sign Surface Mounted EXIT Compact Fluorescent, (2) 7W lamp (No Diffuser)	2	9	Surface Mounted Upgrade EXIT Sign LED Light Fixture. (1) 9W			8760	0.04	0.02	332	156
389	GOLF UNIT BRAVO SIDE	GB CELLS 1-25	25	80	4' Wraparound; Tamper-proof Surface Mounted Fluorescent, (3) 48", T-8 lamp, Instant Start Ballast, NLO (BF: .85-.95) Prismatic Acrylic Diffuser	25	36	Surface Mounted T8 LED Retrofit Lamp with External Driver LED 4' T8 Lamp (3) 12W Lamps			2912	2.01	0.89	5,847	2,595

Line #	Facility Area	Space	Pre Fixture Qty	Pre Watts/ Fixt	Pre Description	Post Fixture Qty	Post Watt/ Fixt	Post Description	Wallswitch Sensor	Ceiling Sensor	Hours of Operation	Base kW	Proposed kW	Base kWh	Proposed kWh
390	GOLF UNIT BRAVO SIDE	COUNSELOR ROOM	1	101	4' Wraparound; Tamper-proof Surface Mounted Fluorescent, (4) 48", T-8 lamp, Instant Start Ballast, NLO (BF: .85-.95) Prismatic Acrylic Diffuser	1	48	Surface Mounted T8 LED Retrofit Lamp with External Driver LED 4' T8 Lamp (4) 12W Lamps			3640	0.10	0.05	368	173
391	GOLF UNIT BRAVO SIDE	SHOWER ROOM	2	53	4' Wraparound; Tamper-proof Surface Mounted Fluorescent, (2) 48", T-8 lamp, Instant Start Ballast, NLO (BF: .85-.95) Prismatic Acrylic Diffuser	2	24	Surface Mounted T8 LED Retrofit Lamp with External Driver LED 4' T8 Lamp (2) 12W Lamps			8760	0.11	0.05	933	416
392	GOLF UNIT BRAVO SIDE	SHOWER ROOM	3	30	2' Wraparound; Tamper-proof Surface Mounted Fluorescent, (2) 24", T-8 lamp, Instant Start Ballast, NLO (BF: .85-.95) Prismatic Acrylic Diffuser	3	16	Surface Mounted T8 LED Retrofit Lamp with External Driver LED 2' T8 Lamp (2) 8W Lamps			8760	0.09	0.05	783	416
393	GOLF UNIT BRAVO SIDE	CUSTODIAL CLOSET	1	53	4' Wraparound; Tamper-proof Surface Mounted Fluorescent, (2) 48", T-8 lamp, Instant Start Ballast, NLO (BF: .85-.95) Prismatic Acrylic Diffuser	1	24	Surface Mounted T8 LED Retrofit Lamp with External Driver LED 4' T8 Lamp (2) 12W Lamps			1456	0.05	0.02	78	35
394	GOLF UNIT BRAVO SIDE	STAIRWELL	6	53	4' Wraparound; Tamper-proof Surface Mounted Fluorescent, (2) 48", T-8 lamp, Instant Start Ballast, NLO (BF: .85-.95) Prismatic Acrylic Diffuser	6	24	Surface Mounted T8 LED Retrofit Lamp with External Driver LED 4' T8 Lamp (2) 12W Lamps			8760	0.32	0.14	2,799	1,249
395	GOLF UNIT BRAVO SIDE	G.001 MECHANICAL ROOM	8	53	4' Industrial Surface Mounted Fluorescent, (2) 48", T-8 lamp, Instant Start Ballast, NLO (BF: .85-.95) (No Diffuser)	8	24	Surface Mounted T8 LED Retrofit Lamp with External Driver LED 4' T8 Lamp (2) 12W Lamps			520	0.43	0.19	222	99
396	GOLF UNIT BRAVO SIDE	G.001 MECHANICAL ROOM	2	19	Universal Face Exit Sign Surface Mounted EXIT Compact Fluorescent, (2) 7W lamp (No Diffuser)	2	9	Surface Mounted Upgrade EXIT Sign LED Light Fixture. (1) 9W			8760	0.04	0.02	332	156
397	GOLF UNIT BRAVO SIDE	G.002 ELECTRICAL ROOM	2	53	4' Industrial Surface Mounted Fluorescent, (2) 48", T-8 lamp, Instant Start Ballast, NLO (BF: .85-.95) (No Diffuser)	2	24	Surface Mounted T8 LED Retrofit Lamp with External Driver LED 4' T8 Lamp (2) 12W Lamps			520	0.11	0.05	55	25
398	GOLF UNIT BRAVO SIDE	G.003 SECURITY PANEL ROOM	1	53	4' Industrial Surface Mounted Fluorescent, (2) 48", T-8 lamp, Instant Start Ballast, NLO (BF: .85-.95) (No Diffuser)	1	24	Surface Mounted T8 LED Retrofit Lamp with External Driver LED 4' T8 Lamp (2) 12W Lamps			520	0.05	0.02	28	12
399	GOLF UNIT BRAVO SIDE	SHOWER ROOM	2	53	4' Wraparound; Tamper-proof Surface Mounted Fluorescent, (2) 48", T-8 lamp, Instant Start Ballast, NLO (BF: .85-.95) Prismatic Acrylic Diffuser	2	24	Surface Mounted T8 LED Retrofit Lamp with External Driver LED 4' T8 Lamp (2) 12W Lamps			8760	0.11	0.05	933	416
400	GOLF UNIT BRAVO SIDE	SHOWER ROOM	3	30	2' Wraparound; Tamper-proof Surface Mounted Fluorescent, (2) 24", T-8 lamp, Instant Start Ballast, NLO (BF: .85-.95) Prismatic Acrylic Diffuser	3	16	Surface Mounted T8 LED Retrofit Lamp with External Driver LED 2' T8 Lamp (2) 8W Lamps			8760	0.09	0.05	783	416
401	GOLF UNIT BRAVO SIDE	CUSTODIAL CLOSET	1	53	4' Wraparound; Tamper-proof Surface Mounted Fluorescent, (2) 48", T-8 lamp, Instant Start Ballast, NLO (BF: .85-.95) Prismatic Acrylic Diffuser	1	24	Surface Mounted T8 LED Retrofit Lamp with External Driver LED 4' T8 Lamp (2) 12W Lamps			1456	0.05	0.02	78	35
402	GOLF UNIT BRAVO SIDE	STORAGE ROOM	2	53	4' Wraparound; Tamper-proof Surface Mounted Fluorescent, (2) 48", T-8 lamp, Instant Start Ballast, NLO (BF: .85-.95) Prismatic Acrylic Diffuser	2	24	Surface Mounted T8 LED Retrofit Lamp with External Driver LED 4' T8 Lamp (2) 12W Lamps			520	0.11	0.05	55	25
403	GOLF UNIT COMMON	ADMIN OFFICE SUITE	5	80	2'x4' Troffer Recessed Flanged Fluorescent, (3) 48", T-8 lamp, Instant Start Ballast, NLO (BF: .85-.95) Prismatic Acrylic Diffuser	5	36	Recessed Flanged T8 LED Retrofit Lamp with External Driver LED 4' T8 Lamp (3) 12W Lamps			3640	0.40	0.18	1,462	649
404	GOLF UNIT COMMON	ADMIN OFFICE SUITE	1	53	4' Wraparound Surface Mounted Fluorescent, (2) 48", T-8 lamp, Instant Start Ballast, NLO (BF: .85-.95) Prismatic Acrylic Diffuser	1	24	Surface Mounted T8 LED Retrofit Lamp with External Driver LED 4' T8 Lamp (2) 12W Lamps			3640	0.05	0.02	194	86
405	GOLF UNIT COMMON	OFFICE	2	80	2'x4' Troffer Recessed Flanged Fluorescent, (3) 48", T-8 lamp, Instant Start Ballast, NLO (BF: .85-.95) Prismatic Acrylic Diffuser	2	36	Recessed Flanged T8 LED Retrofit Lamp with External Driver LED 4' T8 Lamp (3) 12W Lamps			3640	0.16	0.07	585	259
406	GOLF UNIT COMMON	STAFF RESTROOM	1	53	4' Wraparound Surface Mounted Fluorescent, (2) 48", T-8 lamp, Instant Start Ballast, NLO (BF: .85-.95) Prismatic Acrylic Diffuser	1	24	Surface Mounted T8 LED Retrofit Lamp with External Driver LED 4' T8 Lamp (2) 12W Lamps			1456	0.05	0.02	78	35
407	GOLF UNIT COMMON	CONTROL STATION	1	53	4' Wraparound Surface Mounted Fluorescent, (2) 48", T-8 lamp, Instant Start Ballast, NLO (BF: .85-.95) Prismatic Acrylic Diffuser	1	24	Surface Mounted T8 LED Retrofit Lamp with External Driver LED 4' T8 Lamp (2) 12W Lamps			1560	0.05	0.02	83	37
408	GOLF UNIT COMMON	CONTROL STATION	1	101	4' Wraparound Surface Mounted Fluorescent, (4) 48", T-8 lamp, Instant Start Ballast, NLO (BF: .85-.95) Prismatic Acrylic Diffuser	1	48	Surface Mounted T8 LED Retrofit Lamp with External Driver LED 4' T8 Lamp (4) 12W Lamps			1560	0.10	0.05	158	74
409	GOLF UNIT CHARLIE SIDE	CHARLIE SIDE OPEN DAY ROOM	11	266	2'x2' Troffer; Tamper-proof Recessed Metal Halide, (1) 250W lamp Prismatic Acrylic Diffuser	11	49	Recessed Chip On Board (COB) Type Screw-in / Bypass Existing Ballast Light Emitting Diode Lamp, Screw-in, (1) 54W lamp			8760	2.93	0.53	25,655	4,683
410	GOLF UNIT CHARLIE SIDE	CHARLIE SIDE OPEN DAY ROOM	3	101	4' Wraparound; Tamper-proof Surface Mounted Fluorescent, (4) 48", T-8 lamp, Instant Start Ballast, NLO (BF: .85-.95) Prismatic Acrylic Diffuser	3	48	Surface Mounted T8 LED Retrofit Lamp with External Driver LED 4' T8 Lamp (4) 12W Lamps			8760	0.30	0.14	2,656	1,249
411	GOLF UNIT CHARLIE SIDE	CHARLIE SIDE OPEN DAY ROOM	1	101	4' Wraparound; Tamper-proof Surface Mounted Fluorescent, (4) 48", T-8 lamp, Instant Start Ballast, NLO (BF: .85-.95) Prismatic Acrylic Diffuser	1	48	Surface Mounted T8 LED Retrofit Lamp with External Driver LED 4' T8 Lamp (4) 12W Lamps			8760	0.10	0.05	885	416
412	GOLF UNIT CHARLIE SIDE	CHARLIE SIDE OPEN DAY ROOM	2	53	4' Corner Vanity; Tamper-proof Surface Mounted Fluorescent, (2) 48", T-8 lamp, Instant Start Ballast, NLO (BF: .85-.95) Prismatic Acrylic Diffuser	2	24	Surface Mounted T8 LED Retrofit Lamp with External Driver LED 4' T8 Lamp (2) 12W Lamps			8760	0.11	0.05	933	416
413	GOLF UNIT CHARLIE SIDE	DOG WASH ROOM	2	101	4' Wraparound; Tamper-proof Surface Mounted Fluorescent, (4) 48", T-8 lamp, Instant Start Ballast, NLO (BF: .85-.95) Prismatic Acrylic Diffuser	2	48	Surface Mounted T8 LED Retrofit Lamp with External Driver LED 4' T8 Lamp (4) 12W Lamps			1560	0.20	0.10	315	148
414	GOLF UNIT CHARLIE SIDE	CLASSROOM / COMPUTER	3	53	4' Wraparound; Tamper-proof Surface Mounted Fluorescent, (2) 48", T-8 lamp, Instant Start Ballast, NLO (BF: .85-.95) Prismatic Acrylic Diffuser	3	24	Surface Mounted T8 LED Retrofit Lamp with External Driver LED 4' T8 Lamp (2) 12W Lamps			2600	0.16	0.07	415	185
415	GOLF UNIT CHARLIE SIDE	CLASSROOM / COMPUTER	1	205	8' Vapor Proof Surface Mounted Fluorescent, (2) 96", ES HO lamp Vapor Proof Gasketed Diffuser	1	64	Surface Mounted 8' Vapor Proof LED Light Fixture. (1) 65W			2600	0.20	0.06	533	167
416	GOLF UNIT CHARLIE SIDE	MULTIPURPOSE ROOM	3	53	4' Wraparound; Tamper-proof Surface Mounted Fluorescent, (2) 48", T-8 lamp, Instant Start Ballast, NLO (BF: .85-.95) Prismatic Acrylic Diffuser	3	24	Surface Mounted T8 LED Retrofit Lamp with External Driver LED 4' T8 Lamp (2) 12W Lamps			1560	0.16	0.07	249	111
417	GOLF UNIT CHARLIE SIDE	MULTIPURPOSE ROOM	1	101	4' Wraparound; Tamper-proof Surface Mounted Fluorescent, (4) 48", T-8 lamp, Instant Start Ballast, NLO (BF: .85-.95) Prismatic Acrylic Diffuser	1	48	Surface Mounted T8 LED Retrofit Lamp with External Driver LED 4' T8 Lamp (4) 12W Lamps			1560	0.10	0.05	158	74
418	GOLF UNIT CHARLIE SIDE	DORM ONE	12	101	4' Wraparound; Tamper-proof Surface Mounted Fluorescent, (4) 48", T-8 lamp, Instant Start Ballast, NLO (BF: .85-.95) Prismatic Acrylic Diffuser	12	48	Surface Mounted T8 LED Retrofit Lamp with External Driver LED 4' T8 Lamp (4) 12W Lamps			2912	1.21	0.57	3,532	1,661
419	GOLF UNIT CHARLIE SIDE	DORM ONE	2	19	Universal Face Exit Sign Surface Mounted EXIT Compact Fluorescent, (2) 7W lamp (No Diffuser)	2	9	Surface Mounted Upgrade EXIT Sign LED Light Fixture. (1) 9W			8760	0.04	0.02	332	156

Line #	Facility Area	Space	Pre Fixture Qty	Pre Watts/ Fixt	Pre Description	Post Fixture Qty	Post Watt/ Fixt	Post Description	Wallswitch Sensor	Ceiling Sensor	Hours of Operation	Base kW	Proposed kW	Base kWh	Proposed kWh
420	GOLF UNIT CHARLIE SIDE	SHOWER ROOM / RESTROOM	4	53	4' Corner Vanity; Tamper-proof Surface Mounted Fluorescent, (2) 48", T-8 lamp, Instant Start Ballast, NLO (BF: .85-.95) Prismatic Acrylic Diffuser	4	24	Surface Mounted T8 LED Retrofit Lamp with External Driver LED 4' T8 Lamp (2) 12W Lamps			8760	0.21	0.10	1,866	833
421	GOLF UNIT CHARLIE SIDE	DORM TWO	12	101	4' Wraparound; Tamper-proof Surface Mounted Fluorescent, (4) 48", T-8 lamp, Instant Start Ballast, NLO (BF: .85-.95) Prismatic Acrylic Diffuser	12	48	Surface Mounted T8 LED Retrofit Lamp with External Driver LED 4' T8 Lamp (4) 12W Lamps			2912	1.21	0.57	3,532	1,661
422	GOLF UNIT CHARLIE SIDE	DORM TWO	2	19	Universal Face Exit Sign Surface Mounted EXIT Compact Fluorescent, (2) 7W lamp (No Diffuser)	2	9	Surface Mounted Upgrade EXIT Sign LED Light Fixture. (1) 9W			8760	0.04	0.02	332	156
423	GOLF UNIT CHARLIE SIDE	DORM FOUR	12	101	4' Wraparound; Tamper-proof Surface Mounted Fluorescent, (4) 48", T-8 lamp, Instant Start Ballast, NLO (BF: .85-.95) Prismatic Acrylic Diffuser	12	48	Surface Mounted T8 LED Retrofit Lamp with External Driver LED 4' T8 Lamp (4) 12W Lamps			2912	1.21	0.57	3,532	1,661
424	GOLF UNIT CHARLIE SIDE	DORM FOUR	2	19	Universal Face Exit Sign Surface Mounted EXIT Compact Fluorescent, (2) 7W lamp (No Diffuser)	2	9	Surface Mounted Upgrade EXIT Sign LED Light Fixture. (1) 9W			8760	0.04	0.02	332	156
425	GOLF UNIT CHARLIE SIDE	SHOWER ROOM / RESTROOM	4	53	4' Corner Vanity; Tamper-proof Surface Mounted Fluorescent, (2) 48", T-8 lamp, Instant Start Ballast, NLO (BF: .85-.95) Prismatic Acrylic Diffuser	4	24	Surface Mounted T8 LED Retrofit Lamp with External Driver LED 4' T8 Lamp (2) 12W Lamps			8760	0.21	0.10	1,866	833
426	GOLF UNIT CHARLIE SIDE	DORM THREE	12	101	4' Wraparound; Tamper-proof Surface Mounted Fluorescent, (4) 48", T-8 lamp, Instant Start Ballast, NLO (BF: .85-.95) Prismatic Acrylic Diffuser	12	48	Surface Mounted T8 LED Retrofit Lamp with External Driver LED 4' T8 Lamp (4) 12W Lamps			2912	1.21	0.57	3,532	1,661
427	GOLF UNIT CHARLIE SIDE	DORM THREE	2	19	Universal Face Exit Sign Surface Mounted EXIT Compact Fluorescent, (2) 7W lamp (No Diffuser)	2	9	Surface Mounted Upgrade EXIT Sign LED Light Fixture. (1) 9W			8760	0.04	0.02	332	156
428	GOLF UNIT CHARLIE SIDE	CUSTODIAL CLOSET	2	53	4' Wraparound; Tamper-proof Surface Mounted Fluorescent, (2) 48", T-8 lamp, Instant Start Ballast, NLO (BF: .85-.95) Prismatic Acrylic Diffuser	2	24	Surface Mounted T8 LED Retrofit Lamp with External Driver LED 4' T8 Lamp (2) 12W Lamps			1456	0.11	0.05	155	69
429	GOLF UNIT ALPHA SIDE	ALPHA SIDE OPEN DAY ROOM	12	266	2'x2' Troffer; Tamper-proof Recessed Metal Halide, (1) 250W lamp Prismatic Acrylic Diffuser	12	49	Recessed Chip On Board (COB) Type Screw-in / Bypass Existing Ballast Light Emitting Diode Lamp, Screw-in, (1) 54W lamp			8760	3.19	0.58	27,987	5,109
430	GOLF UNIT ALPHA SIDE	GA CELLS 1-25	25	80	4' Wraparound; Tamper-proof Surface Mounted Fluorescent, (3) 48", T-8 lamp, Instant Start Ballast, NLO (BF: .85-.95) Prismatic Acrylic Diffuser	25	36	Surface Mounted T8 LED Retrofit Lamp with External Driver LED 4' T8 Lamp (3) 12W Lamps			2912	2.01	0.89	5,847	2,595
431	GOLF UNIT ALPHA SIDE	COUNSELOR ROOM	1	101	4' Wraparound; Tamper-proof Surface Mounted Fluorescent, (4) 48", T-8 lamp, Instant Start Ballast, NLO (BF: .85-.95) Prismatic Acrylic Diffuser	1	48	Surface Mounted T8 LED Retrofit Lamp with External Driver LED 4' T8 Lamp (4) 12W Lamps			520	0.10	0.05	53	25
432	GOLF UNIT ALPHA SIDE	SHOWER ROOM / RESTROOM	2	53	4' Wraparound; Tamper-proof Surface Mounted Fluorescent, (2) 48", T-8 lamp, Instant Start Ballast, NLO (BF: .85-.95) Prismatic Acrylic Diffuser	2	24	Surface Mounted T8 LED Retrofit Lamp with External Driver LED 4' T8 Lamp (2) 12W Lamps			8760	0.11	0.05	933	416
433	GOLF UNIT ALPHA SIDE	SHOWER ROOM / RESTROOM	3	30	2' Wraparound; Tamper-proof Surface Mounted Fluorescent, (2) 24", T-8 lamp, Instant Start Ballast, NLO (BF: .85-.95) Prismatic Acrylic Diffuser	3	16	Surface Mounted T8 LED Retrofit Lamp with External Driver LED 2' T8 Lamp (2) 8W Lamps			8760	0.09	0.05	783	416
434	GOLF UNIT ALPHA SIDE	CUSTODIAL CLOSET	1	53	4' Wraparound; Tamper-proof Surface Mounted Fluorescent, (2) 48", T-8 lamp, Instant Start Ballast, NLO (BF: .85-.95) Prismatic Acrylic Diffuser	1	24	Surface Mounted T8 LED Retrofit Lamp with External Driver LED 4' T8 Lamp (2) 12W Lamps			1456	0.05	0.02	78	35
435	GOLF UNIT ALPHA SIDE	STAIRWELL	6	53	4' Wraparound; Tamper-proof Surface Mounted Fluorescent, (2) 48", T-8 lamp, Instant Start Ballast, NLO (BF: .85-.95) Prismatic Acrylic Diffuser	6	24	Surface Mounted T8 LED Retrofit Lamp with External Driver LED 4' T8 Lamp (2) 12W Lamps			8760	0.32	0.14	2,799	1,249
436	GOLF UNIT ALPHA SIDE	G.004 MECHANICAL ROOM	10	53	4' Industrial Surface Mounted Fluorescent, (2) 48", T-8 lamp, Instant Start Ballast, NLO (BF: .85-.95) (No Diffuser)	10	24	Surface Mounted T8 LED Retrofit Lamp with External Driver LED 4' T8 Lamp (2) 12W Lamps			520	0.53	0.24	277	124
437	GOLF UNIT ALPHA SIDE	SHOWER ROOM / RESTROOM	2	53	4' Wraparound; Tamper-proof Surface Mounted Fluorescent, (2) 48", T-8 lamp, Instant Start Ballast, NLO (BF: .85-.95) Prismatic Acrylic Diffuser	2	24	Surface Mounted T8 LED Retrofit Lamp with External Driver LED 4' T8 Lamp (2) 12W Lamps			8760	0.11	0.05	933	416
438	GOLF UNIT ALPHA SIDE	SHOWER ROOM / RESTROOM	3	30	2' Wraparound; Tamper-proof Surface Mounted Fluorescent, (2) 24", T-8 lamp, Instant Start Ballast, NLO (BF: .85-.95) Prismatic Acrylic Diffuser	3	16	Surface Mounted T8 LED Retrofit Lamp with External Driver LED 2' T8 Lamp (2) 8W Lamps			8760	0.09	0.05	783	416
439	GOLF UNIT ALPHA SIDE	CUSTODIAL CLOSET	1	53	4' Wraparound; Tamper-proof Surface Mounted Fluorescent, (2) 48", T-8 lamp, Instant Start Ballast, NLO (BF: .85-.95) Prismatic Acrylic Diffuser	1	24	Surface Mounted T8 LED Retrofit Lamp with External Driver LED 4' T8 Lamp (2) 12W Lamps			1456	0.05	0.02	78	35
440	GOLF UNIT ALPHA SIDE	STORAGE ROOM	2	53	4' Wraparound; Tamper-proof Surface Mounted Fluorescent, (2) 48", T-8 lamp, Instant Start Ballast, NLO (BF: .85-.95) Prismatic Acrylic Diffuser	2	24	Surface Mounted T8 LED Retrofit Lamp with External Driver LED 4' T8 Lamp (2) 12W Lamps			520	0.11	0.05	55	25
441	INDIA UNIT COMMON	ENTRY VESTIBULE	1	80	1'x4' Troffer; Tamper-proof Recessed Flanged Fluorescent, (3) 48", T-8 lamp, Instant Start Ballast, NLO (BF: .85-.95) Prismatic Acrylic Diffuser	1	36	Recessed Flanged T8 LED Retrofit Lamp with External Driver LED 4' T8 Lamp (3) 12W Lamps			8760	0.08	0.04	704	312
442	INDIA UNIT ALPHA SIDE	ALPHA SIDE OPEN DAY ROOM	9	413	2'x2' Box Troffer Surface Mounted Metal Halide, (1) 400W lamp Prismatic Acrylic Diffuser	9	90	Surface Mounted Chip On Board (COB) Type Screw-in / Bypass Existing Ballast Light Emitting Diode Lamp, Screw-in, (1) 100W lamp			8760	3.72	0.81	32,588	7,096
443	INDIA UNIT ALPHA SIDE	ALPHA SIDE OPEN DAY ROOM	44	101	2'x4' Troffer; Tamper-proof Surface Mounted Fluorescent, (4) 48", T-8 lamp, Instant Start Ballast, NLO (BF: .85-.95) Prismatic Acrylic Diffuser	44	48	Surface Mounted T8 LED Retrofit Lamp with External Driver LED 4' T8 Lamp (4) 12W Lamps			8760	4.45	2.09	38,960	18,316
444	INDIA UNIT ALPHA SIDE	ALPHA SIDE OPEN DAY ROOM	2	3	Universal Face Exit Sign Surface Mounted EXIT Light Emitting Diode, (1) 3W lamp, Single Sided (No Diffuser)	2	3	Existing luminaire to remain as is No Retrofit. To remain as is.			8760	0.01	0.01	49	49
445	INDIA UNIT ALPHA SIDE	IA CELLS 1-64	64	53	4' Corner Vanity; Tamper-proof Surface Mounted Fluorescent, (2) 48", T-8 lamp, Instant Start Ballast, NLO (BF: .85-.95) Prismatic Acrylic Diffuser	64	24	Surface Mounted T8 LED Retrofit Lamp with External Driver LED 4' T8 Lamp (2) 12W Lamps			2912	3.41	1.52	9,924	4,428
446	INDIA UNIT ALPHA SIDE	STORAGE ROOM	1	30	2'x2' Troffer; Tamper-proof Surface Mounted Fluorescent, (2) 24", T-8 lamp, Instant Start Ballast, NLO (BF: .85-.95) Prismatic Acrylic Diffuser	1	16	Surface Mounted T8 LED Retrofit Lamp with External Driver LED 2' T8 Lamp (2) 8W Lamps			520	0.03	0.02	15	8
447	INDIA UNIT ALPHA SIDE	LAUNDRY CART ROOM	4	80	1'x4' Troffer; Tamper-proof Surface Mounted Fluorescent, (3) 48", T-8 lamp, Instant Start Ballast, NLO (BF: .85-.95) Prismatic Acrylic Diffuser	4	36	Surface Mounted T8 LED Retrofit Lamp with External Driver LED 4' T8 Lamp (3) 12W Lamps			1560	0.32	0.14	501	222
448	INDIA UNIT ALPHA SIDE	COUNSELOR OFFICE	4	80	1'x4' Troffer; Tamper-proof Recessed Flanged Fluorescent, (3) 48", T-8 lamp, Instant Start Ballast, NLO (BF: .85-.95) Prismatic Acrylic Diffuser	4	36	Recessed Flanged T8 LED Retrofit Lamp with External Driver LED 4' T8 Lamp (3) 12W Lamps			3640	0.32	0.14	1,169	519
449	INDIA UNIT ALPHA SIDE	COUNSELOR OFFICE	1	53	4' Wraparound; Tamper-proof Surface Mounted Fluorescent, (2) 48", T-8 lamp, Instant Start Ballast, NLO (BF: .85-.95) Prismatic Acrylic Diffuser	1	24	Surface Mounted T8 LED Retrofit Lamp with External Driver LED 4' T8 Lamp (2) 12W Lamps			3640	0.05	0.02	194	86

Line #	Facility Area	Space	Pre Fixture Qty	Pre Watts/ Fixt	Pre Description	Post Fixture Qty	Post Watt/ Fixt	Post Description	Wallswitch Sensor	Ceiling Sensor	Hours of Operation	Base kW	Proposed kW	Base kWh	Proposed kWh
450	INDIA UNIT ALPHA SIDE	UPPER STORAGE	1	60	1'x1' Square; Tamper-Proof Recessed Compact Fluorescent, quad, (2) 26W lamp Prismatic Acrylic Diffuser	1	14	Recessed Install LED Plug-in Lamp; Bypass Ballast Light Emitting Diode Lamp, Screw-in, (2) 8W lamp			520	0.06	0.01	31	7
451	INDIA UNIT ALPHA SIDE	UPPER SHOWERS	2	80	1'x4' Troffer; Tamper-proof Surface Mounted Fluorescent, (3) 48", T-8 lamp, Instant Start Ballast, NLO (BF: .85-.95) Prismatic Acrylic Diffuser	2	36	Surface Mounted T8 LED Retrofit Lamp with External Driver LED 4' T8 Lamp (3) 12W Lamps			8760	0.16	0.07	1,407	624
452	INDIA UNIT ALPHA SIDE	TRASH ROOM	1	60	1'x1' Square; Tamper-Proof Recessed Compact Fluorescent, quad, (2) 26W lamp Prismatic Acrylic Diffuser	1	14	Recessed Install LED Plug-in Lamp; Bypass Ballast Light Emitting Diode Lamp, Screw-in, (2) 8W lamp			1560	0.06	0.01	93	22
453	INDIA UNIT ALPHA SIDE	OFFICE	2	80	2'x4' Troffer; Tamper-proof Recessed Fluorescent, (3) 48", T-8 lamp, Instant Start Ballast, NLO (BF: .85-.95) Prismatic Acrylic Diffuser	2	36	Recessed T8 LED Retrofit Lamp with External Driver LED 4' T8 Lamp (3) 12W Lamps			3640	0.16	0.07	585	259
454	INDIA UNIT ALPHA SIDE	UPPER STORAGE	1	60	1'x1' Square; Tamper-Proof Recessed Compact Fluorescent, quad, (2) 26W lamp Prismatic Acrylic Diffuser	1	14	Recessed Install LED Plug-in Lamp; Bypass Ballast Light Emitting Diode Lamp, Screw-in, (2) 8W lamp			520	0.06	0.01	31	7
455	INDIA UNIT ALPHA SIDE	UPPER STORAGE	4	80	1'x4' Troffer; Tamper-proof Recessed Flanged Fluorescent, (3) 48", T-8 lamp, Instant Start Ballast, NLO (BF: .85-.95) Prismatic Acrylic Diffuser	4	36	Recessed Flanged T8 LED Retrofit Lamp with External Driver LED 4' T8 Lamp (3) 12W Lamps			520	0.32	0.14	167	74
456	INDIA UNIT BRAVO SIDE	ALPHA SIDE OPEN DAY ROOM	9	413	2'x2' Box Troffer Surface Mounted Metal Halide, (1) 400W lamp Prismatic Acrylic Diffuser	9	90	Surface Mounted Chip On Board (COB) Type Screw-in / Bypass Existing Ballast Light Emitting Diode Lamp, Screw-in, (1) 100W lamp			8760	3.72	0.81	32,588	7,096
457	INDIA UNIT BRAVO SIDE	ALPHA SIDE OPEN DAY ROOM	44	101	2'x4' Troffer; Tamper-proof Surface Mounted Fluorescent, (4) 48", T-8 lamp, Instant Start Ballast, NLO (BF: .85-.95) Prismatic Acrylic Diffuser	44	48	Surface Mounted T8 LED Retrofit Lamp with External Driver LED 4' T8 Lamp (4) 12W Lamps			8760	4.45	2.09	38,960	18,316
458	INDIA UNIT BRAVO SIDE	ALPHA SIDE OPEN DAY ROOM	2	3	Universal Face Exit Sign Surface Mounted EXIT Light Emitting Diode, (1) 3W lamp, Single Sided (No Diffuser)	2	3	Existing luminaire to remain as is No Retrofit. To remain as is.			8760	0.01	0.01	49	49
459	INDIA UNIT BRAVO SIDE	IA CELLS 1-64	64	53	4' Corner Vanity; Tamper-proof Surface Mounted Fluorescent, (2) 48", T-8 lamp, Instant Start Ballast, NLO (BF: .85-.95) Prismatic Acrylic Diffuser	64	24	Surface Mounted T8 LED Retrofit Lamp with External Driver LED 4' T8 Lamp (2) 12W Lamps			2912	3.41	1.52	9,924	4,428
460	INDIA UNIT BRAVO SIDE	STORAGE ROOM	1	30	2'x2' Troffer; Tamper-proof Surface Mounted Fluorescent, (2) 24", T-8 lamp, Instant Start Ballast, NLO (BF: .85-.95) Prismatic Acrylic Diffuser	1	16	Surface Mounted T8 LED Retrofit Lamp with External Driver LED 2' T8 Lamp (2) 8W Lamps			520	0.03	0.02	15	8
461	INDIA UNIT BRAVO SIDE	LAUNDRY CART ROOM	4	80	1'x4' Troffer; Tamper-proof Surface Mounted Fluorescent, (3) 48", T-8 lamp, Instant Start Ballast, NLO (BF: .85-.95) Prismatic Acrylic Diffuser	4	36	Surface Mounted T8 LED Retrofit Lamp with External Driver LED 4' T8 Lamp (3) 12W Lamps			1560	0.32	0.14	501	222
462	INDIA UNIT BRAVO SIDE	COUNSELOR OFFICE	4	80	1'x4' Troffer; Tamper-proof Recessed Flanged Fluorescent, (3) 48", T-8 lamp, Instant Start Ballast, NLO (BF: .85-.95) Prismatic Acrylic Diffuser	4	36	Recessed Flanged T8 LED Retrofit Lamp with External Driver LED 4' T8 Lamp (3) 12W Lamps			3640	0.32	0.14	1,169	519
463	INDIA UNIT BRAVO SIDE	COUNSELOR OFFICE	1	53	4' Wraparound; Tamper-proof Surface Mounted Fluorescent, (2) 48", T-8 lamp, Instant Start Ballast, NLO (BF: .85-.95) Prismatic Acrylic Diffuser	1	24	Surface Mounted T8 LED Retrofit Lamp with External Driver LED 4' T8 Lamp (2) 12W Lamps			3640	0.05	0.02	194	86
464	INDIA UNIT BRAVO SIDE	UPPER STORAGE	1	60	1'x1' Square; Tamper-Proof Recessed Compact Fluorescent, quad, (2) 26W lamp Prismatic Acrylic Diffuser	1	14	Recessed Install LED Plug-in Lamp; Bypass Ballast Light Emitting Diode Lamp, Screw-in, (2) 8W lamp			520	0.06	0.01	31	7
465	INDIA UNIT BRAVO SIDE	UPPER SHOWERS	2	80	1'x4' Troffer; Tamper-proof Surface Mounted Fluorescent, (3) 48", T-8 lamp, Instant Start Ballast, NLO (BF: .85-.95) Prismatic Acrylic Diffuser	2	36	Surface Mounted T8 LED Retrofit Lamp with External Driver LED 4' T8 Lamp (3) 12W Lamps			8760	0.16	0.07	1,407	624
466	INDIA UNIT BRAVO SIDE	TRASH ROOM	1	60	1'x1' Square; Tamper-Proof Recessed Compact Fluorescent, quad, (2) 26W lamp Prismatic Acrylic Diffuser	1	14	Recessed Install LED Plug-in Lamp; Bypass Ballast Light Emitting Diode Lamp, Screw-in, (2) 8W lamp			1560	0.06	0.01	93	22
467	INDIA UNIT BRAVO SIDE	OFFICE	2	80	2'x4' Troffer; Tamper-proof Recessed Fluorescent, (3) 48", T-8 lamp, Instant Start Ballast, NLO (BF: .85-.95) Prismatic Acrylic Diffuser	2	36	Recessed T8 LED Retrofit Lamp with External Driver LED 4' T8 Lamp (3) 12W Lamps			3640	0.16	0.07	585	259
468	INDIA UNIT BRAVO SIDE	UPPER STORAGE	1	60	1'x1' Square; Tamper-Proof Recessed Compact Fluorescent, quad, (2) 26W lamp Prismatic Acrylic Diffuser	1	14	Recessed Install LED Plug-in Lamp; Bypass Ballast Light Emitting Diode Lamp, Screw-in, (2) 8W lamp			520	0.06	0.01	31	7
469	INDIA UNIT BRAVO SIDE	UPPER STORAGE	4	80	1'x4' Troffer; Tamper-proof Recessed Flanged Fluorescent, (3) 48", T-8 lamp, Instant Start Ballast, NLO (BF: .85-.95) Prismatic Acrylic Diffuser	4	36	Recessed Flanged T8 LED Retrofit Lamp with External Driver LED 4' T8 Lamp (3) 12W Lamps			520	0.32	0.14	167	74
470	INDIA UNIT COMMON	CENTRAL CONTROL CORRIDOR	4	60	1'x1' Square; Tamper-Proof Recessed Flanged Compact Fluorescent, quad, (2) 26W lamp Prismatic Acrylic Diffuser	4	14	Recessed Flanged Install LED Plug-in Lamp; Bypass Ballast Light Emitting Diode Lamp, Screw-in, (2) 8W lamp			8760	0.24	0.06	2,087	505
471	INDIA UNIT COMMON	CENTRAL CONTROL ENTRY	1	60	1'x1' Square; Tamper-Proof Recessed Flanged Compact Fluorescent, quad, (2) 26W lamp Prismatic Acrylic Diffuser	1	14	Recessed Flanged Install LED Plug-in Lamp; Bypass Ballast Light Emitting Diode Lamp, Screw-in, (2) 8W lamp			200	0.06	0.01	12	3
472	INDIA UNIT COMMON	RESTROOM	1	60	1'x1' Square; Tamper-Proof Recessed Flanged Compact Fluorescent, quad, (2) 26W lamp Prismatic Acrylic Diffuser	1	14	Recessed Flanged Install LED Plug-in Lamp; Bypass Ballast Light Emitting Diode Lamp, Screw-in, (2) 8W lamp			1456	0.06	0.01	87	21
473	INDIA UNIT COMMON	CENTRAL CONTROL	3	101	2'x4' Troffer Recessed Fluorescent, (4) 48", T-8 lamp, Instant Start Ballast, NLO (BF: .85-.95) Prismatic Acrylic Diffuser	3	48	Recessed T8 LED Retrofit Lamp with External Driver LED 4' T8 Lamp (4) 12W Lamps			200	0.30	0.14	61	29
474	INDIA UNIT COMMON	CENTRAL CONTROL	2	60	1'x1' Square; Tamper-Proof Recessed Compact Fluorescent, quad, (2) 26W lamp Prismatic Acrylic Diffuser	2	14	Recessed Install LED Plug-in Lamp; Bypass Ballast Light Emitting Diode Lamp, Screw-in, (2) 8W lamp			200	0.12	0.03	24	6
475	INDIA UNIT COMMON	UPPER MECHANICAL ROOM	3	80	1'x4' Troffer; Tamper-proof Surface Mounted Fluorescent, (3) 48", T-8 lamp, Instant Start Ballast, NLO (BF: .85-.95) Prismatic Acrylic Diffuser	3	36	Surface Mounted T8 LED Retrofit Lamp with External Driver LED 4' T8 Lamp (3) 12W Lamps			520	0.24	0.11	125	56
476	INDIA UNIT COMMON	UPPER MECHANICAL ROOM	3	101	2'x4' Troffer; Tamper-proof Surface Mounted Fluorescent, (4) 48", T-8 lamp, Instant Start Ballast, NLO (BF: .85-.95) Prismatic Acrylic Diffuser	3	48	Surface Mounted T8 LED Retrofit Lamp with External Driver LED 4' T8 Lamp (4) 12W Lamps			520	0.30	0.14	158	74
477	INDIA UNIT COMMON	UPPER MECHANICAL ROOM	2	101	2'x4' Troffer; Tamper-proof Surface Mounted Fluorescent, (4) 48", T-8 lamp, Instant Start Ballast, NLO (BF: .85-.95) Prismatic Acrylic Diffuser	2	48	Surface Mounted T8 LED Retrofit Lamp with External Driver LED 4' T8 Lamp (4) 12W Lamps			520	0.20	0.10	105	49
478	INDIA UNIT COMMON	UPPER MECHANICAL ROOM	2	80	1'x4' Troffer; Tamper-proof Surface Mounted Fluorescent, (3) 48", T-8 lamp, Instant Start Ballast, NLO (BF: .85-.95) Prismatic Acrylic Diffuser	2	36	Surface Mounted T8 LED Retrofit Lamp with External Driver LED 4' T8 Lamp (3) 12W Lamps			520	0.16	0.07	84	37
479	INDIA UNIT COMMON	EXTERIOR PLUMBING CONTROL ROOM	4	53	4' Corner Vanity; Tamper-proof Surface Mounted Fluorescent, (2) 48", T-8 lamp, Instant Start Ballast, NLO (BF: .85-.95) Prismatic Acrylic Diffuser	4	24	Surface Mounted T8 LED Retrofit Lamp with External Driver LED 4' T8 Lamp (2) 12W Lamps			520	0.21	0.10	111	49

Line #	Facility Area	Space	Pre Fixture Qty	Pre Watts/ Fixt	Pre Description	Post Fixture Qty	Post Watt/ Fixt	Post Description	Wallswitch Sensor	Ceiling Sensor	Hours of Operation	Base kW	Proposed kW	Base kWh	Proposed kWh
480	INDIA UNIT COMMON	EXTERIOR PLUMBING CONTROL ROOM	4	80	1'x4' Troffer; Tamper-proof Surface Mounted Fluorescent, (3) 48", T-8 lamp, Instant Start Ballast, NLO (BF: .85-.95) Prismatic Acrylic Diffuser	4	36	Surface Mounted T8 LED Retrofit Lamp with External Driver LED 4' T8 Lamp (3) 12W Lamps			520	0.32	0.14	167	74
481	JULIET UNIT COMMON	ENTRY VESTIBULE	1	80	1'x4' Troffer; Tamper-proof Recessed Flanged Fluorescent, (3) 48", T-8 lamp, Instant Start Ballast, NLO (BF: .85-.95) Prismatic Acrylic Diffuser	1	36	Recessed Flanged T8 LED Retrofit Lamp with External Driver LED 4' T8 Lamp (3) 12W Lamps			8760	0.08	0.04	704	312
482	JULIET UNIT ALPHA SIDE	ALPHA SIDE OPEN DAY ROOM	9	413	2'x2' Box Troffer Surface Mounted Metal Halide, (1) 400W lamp Prismatic Acrylic Diffuser	9	90	Surface Mounted Chip On Board (COB) Type Screw-in / Bypass Existing Ballast Light Emitting Diode Lamp, Screw-in, (1) 100W lamp			8760	3.72	0.81	32,588	7,096
483	JULIET UNIT ALPHA SIDE	ALPHA SIDE OPEN DAY ROOM	44	101	2'x4' Troffer; Tamper-proof Surface Mounted Fluorescent, (4) 48", T-8 lamp, Instant Start Ballast, NLO (BF: .85-.95) Prismatic Acrylic Diffuser	44	48	Surface Mounted T8 LED Retrofit Lamp with External Driver LED 4' T8 Lamp (4) 12W Lamps			8760	4.45	2.09	38,960	18,316
484	JULIET UNIT ALPHA SIDE	ALPHA SIDE OPEN DAY ROOM	2	3	Universal Face Exit Sign Surface Mounted EXIT Light Emitting Diode, (1) 3W lamp, Single Sided (No Diffuser)	2	3	Existing luminaire to remain as is No Retrofit. To remain as is.			8760	0.01	0.01	49	49
485	JULIET UNIT ALPHA SIDE	IA CELLS 1-64	64	53	4' Corner Vanity; Tamper-proof Surface Mounted Fluorescent, (2) 48", T-8 lamp, Instant Start Ballast, NLO (BF: .85-.95) Prismatic Acrylic Diffuser	64	24	Surface Mounted T8 LED Retrofit Lamp with External Driver LED 4' T8 Lamp (2) 12W Lamps			2912	3.41	1.52	9,924	4,428
486	JULIET UNIT ALPHA SIDE	STORAGE ROOM	1	30	2'x2' Troffer; Tamper-proof Surface Mounted Fluorescent, (2) 24", T-8 lamp, Instant Start Ballast, NLO (BF: .85-.95) Prismatic Acrylic Diffuser	1	16	Surface Mounted T8 LED Retrofit Lamp with External Driver LED 2' T8 Lamp (2) 8W Lamps			520	0.03	0.02	15	8
487	JULIET UNIT ALPHA SIDE	LAUNDRY CART ROOM	4	80	1'x4' Troffer; Tamper-proof Surface Mounted Fluorescent, (3) 48", T-8 lamp, Instant Start Ballast, NLO (BF: .85-.95) Prismatic Acrylic Diffuser	4	36	Surface Mounted T8 LED Retrofit Lamp with External Driver LED 4' T8 Lamp (3) 12W Lamps			1560	0.32	0.14	501	222
488	JULIET UNIT ALPHA SIDE	COUNSELOR OFFICE	4	80	1'x4' Troffer; Tamper-proof Recessed Flanged Fluorescent, (3) 48", T-8 lamp, Instant Start Ballast, NLO (BF: .85-.95) Prismatic Acrylic Diffuser	4	36	Recessed Flanged T8 LED Retrofit Lamp with External Driver LED 4' T8 Lamp (3) 12W Lamps			3640	0.32	0.14	1,169	519
489	JULIET UNIT ALPHA SIDE	UPPER STORAGE	1	60	1'x1' Square; Tamper-Proof Recessed Compact Fluorescent, quad, (2) 26W lamp Prismatic Acrylic Diffuser	1	14	Recessed Install LED Plug-in Lamp; Bypass Ballast Light Emitting Diode Lamp, Screw-in, (2) 8W lamp			520	0.06	0.01	31	7
490	JULIET UNIT ALPHA SIDE	UPPER SHOWERS	2	80	1'x4' Troffer; Tamper-proof Surface Mounted Fluorescent, (3) 48", T-8 lamp, Instant Start Ballast, NLO (BF: .85-.95) Prismatic Acrylic Diffuser	2	36	Surface Mounted T8 LED Retrofit Lamp with External Driver LED 4' T8 Lamp (3) 12W Lamps			8760	0.16	0.07	1,407	624
491	JULIET UNIT ALPHA SIDE	TRASH ROOM	1	60	1'x1' Square; Tamper-Proof Recessed Compact Fluorescent, quad, (2) 26W lamp Prismatic Acrylic Diffuser	1	14	Recessed Install LED Plug-in Lamp; Bypass Ballast Light Emitting Diode Lamp, Screw-in, (2) 8W lamp			1560	0.06	0.01	93	22
492	JULIET UNIT ALPHA SIDE	OFFICE	2	80	2'x4' Troffer; Tamper-proof Recessed Fluorescent, (3) 48", T-8 lamp, Instant Start Ballast, NLO (BF: .85-.95) Prismatic Acrylic Diffuser	2	36	Recessed T8 LED Retrofit Lamp with External Driver LED 4' T8 Lamp (3) 12W Lamps			3640	0.16	0.07	585	259
493	JULIET UNIT ALPHA SIDE	UPPER STORAGE	1	60	1'x1' Square; Tamper-Proof Recessed Compact Fluorescent, quad, (2) 26W lamp Prismatic Acrylic Diffuser	1	14	Recessed Install LED Plug-in Lamp; Bypass Ballast Light Emitting Diode Lamp, Screw-in, (2) 8W lamp			520	0.06	0.01	31	7
494	JULIET UNIT ALPHA SIDE	UPPER STORAGE	4	80	1'x4' Troffer; Tamper-proof Recessed Flanged Fluorescent, (3) 48", T-8 lamp, Instant Start Ballast, NLO (BF: .85-.95) Prismatic Acrylic Diffuser	4	36	Recessed Flanged T8 LED Retrofit Lamp with External Driver LED 4' T8 Lamp (3) 12W Lamps			520	0.32	0.14	167	74
495	JULIET UNIT BRAVO SIDE	ALPHA SIDE OPEN DAY ROOM	9	413	2'x2' Box Troffer Surface Mounted Metal Halide, (1) 400W lamp Prismatic Acrylic Diffuser	9	90	Surface Mounted Chip On Board (COB) Type Screw-in / Bypass Existing Ballast Light Emitting Diode Lamp, Screw-in, (1) 100W lamp			8760	3.72	0.81	32,588	7,096
496	JULIET UNIT BRAVO SIDE	ALPHA SIDE OPEN DAY ROOM	44	101	2'x4' Troffer; Tamper-proof Surface Mounted Fluorescent, (4) 48", T-8 lamp, Instant Start Ballast, NLO (BF: .85-.95) Prismatic Acrylic Diffuser	44	48	Surface Mounted T8 LED Retrofit Lamp with External Driver LED 4' T8 Lamp (4) 12W Lamps			8760	4.45	2.09	38,960	18,316
497	JULIET UNIT BRAVO SIDE	ALPHA SIDE OPEN DAY ROOM	2	3	Universal Face Exit Sign Surface Mounted EXIT Light Emitting Diode, (1) 3W lamp, Single Sided (No Diffuser)	2	3	Existing luminaire to remain as is No Retrofit. To remain as is.			8760	0.01	0.01	49	49
498	JULIET UNIT BRAVO SIDE	IA CELLS 1-64	64	53	4' Corner Vanity; Tamper-proof Surface Mounted Fluorescent, (2) 48", T-8 lamp, Instant Start Ballast, NLO (BF: .85-.95) Prismatic Acrylic Diffuser	64	24	Surface Mounted T8 LED Retrofit Lamp with External Driver LED 4' T8 Lamp (2) 12W Lamps			2912	3.41	1.52	9,924	4,428
499	JULIET UNIT BRAVO SIDE	STORAGE ROOM	1	30	2'x2' Troffer; Tamper-proof Surface Mounted Fluorescent, (2) 24", T-8 lamp, Instant Start Ballast, NLO (BF: .85-.95) Prismatic Acrylic Diffuser	1	16	Surface Mounted T8 LED Retrofit Lamp with External Driver LED 2' T8 Lamp (2) 8W Lamps			520	0.03	0.02	15	8
500	JULIET UNIT BRAVO SIDE	LAUNDRY CART ROOM	4	80	1'x4' Troffer; Tamper-proof Surface Mounted Fluorescent, (3) 48", T-8 lamp, Instant Start Ballast, NLO (BF: .85-.95) Prismatic Acrylic Diffuser	4	36	Surface Mounted T8 LED Retrofit Lamp with External Driver LED 4' T8 Lamp (3) 12W Lamps			1560	0.32	0.14	501	222
501	JULIET UNIT BRAVO SIDE	COUNSELOR OFFICE	4	80	1'x4' Troffer; Tamper-proof Recessed Flanged Fluorescent, (3) 48", T-8 lamp, Instant Start Ballast, NLO (BF: .85-.95) Prismatic Acrylic Diffuser	4	36	Recessed Flanged T8 LED Retrofit Lamp with External Driver LED 4' T8 Lamp (3) 12W Lamps			3640	0.32	0.14	1,169	519
502	JULIET UNIT BRAVO SIDE	COUNSELOR OFFICE	1	53	4' Wraparound; Tamper-proof Surface Mounted Fluorescent, (2) 48", T-8 lamp, Instant Start Ballast, NLO (BF: .85-.95) Prismatic Acrylic Diffuser	1	24	Surface Mounted T8 LED Retrofit Lamp with External Driver LED 4' T8 Lamp (2) 12W Lamps			3640	0.05	0.02	194	86
503	JULIET UNIT BRAVO SIDE	UPPER STORAGE	1	60	1'x1' Square; Tamper-Proof Recessed Compact Fluorescent, quad, (2) 26W lamp Prismatic Acrylic Diffuser	1	14	Recessed Install LED Plug-in Lamp; Bypass Ballast Light Emitting Diode Lamp, Screw-in, (2) 8W lamp			520	0.06	0.01	31	7
504	JULIET UNIT BRAVO SIDE	UPPER SHOWERS	2	80	1'x4' Troffer; Tamper-proof Surface Mounted Fluorescent, (3) 48", T-8 lamp, Instant Start Ballast, NLO (BF: .85-.95) Prismatic Acrylic Diffuser	2	36	Surface Mounted T8 LED Retrofit Lamp with External Driver LED 4' T8 Lamp (3) 12W Lamps			8760	0.16	0.07	1,407	624
505	JULIET UNIT BRAVO SIDE	TRASH ROOM	1	60	1'x1' Square; Tamper-Proof Recessed Compact Fluorescent, quad, (2) 26W lamp Prismatic Acrylic Diffuser	1	14	Recessed Install LED Plug-in Lamp; Bypass Ballast Light Emitting Diode Lamp, Screw-in, (2) 8W lamp			1560	0.06	0.01	93	22
506	JULIET UNIT BRAVO SIDE	OFFICE	2	80	2'x4' Troffer; Tamper-proof Recessed Fluorescent, (3) 48", T-8 lamp, Instant Start Ballast, NLO (BF: .85-.95) Prismatic Acrylic Diffuser	2	36	Recessed T8 LED Retrofit Lamp with External Driver LED 4' T8 Lamp (3) 12W Lamps			3640	0.16	0.07	585	259
507	JULIET UNIT BRAVO SIDE	UPPER STORAGE	1	60	1'x1' Square; Tamper-Proof Recessed Compact Fluorescent, quad, (2) 26W lamp Prismatic Acrylic Diffuser	1	14	Recessed Install LED Plug-in Lamp; Bypass Ballast Light Emitting Diode Lamp, Screw-in, (2) 8W lamp			520	0.06	0.01	31	7
508	JULIET UNIT BRAVO SIDE	UPPER STORAGE	4	80	1'x4' Troffer; Tamper-proof Recessed Flanged Fluorescent, (3) 48", T-8 lamp, Instant Start Ballast, NLO (BF: .85-.95) Prismatic Acrylic Diffuser	4	36	Recessed Flanged T8 LED Retrofit Lamp with External Driver LED 4' T8 Lamp (3) 12W Lamps			520	0.32	0.14	167	74
509	JULIET UNIT COMMON	CENTRAL CONTROL CORRIDOR	4	60	1'x1' Square; Tamper-Proof Recessed Flanged Compact Fluorescent, quad, (2) 26W lamp Prismatic Acrylic Diffuser	4	14	Recessed Flanged Install LED Plug-in Lamp; Bypass Ballast Light Emitting Diode Lamp, Screw-in, (2) 8W lamp			8760	0.24	0.06	2,087	505

Line #	Facility Area	Space	Pre Fixture Qty	Pre Watts/ Fixt	Pre Description	Post Fixture Qty	Post Watt/ Fixt	Post Description	Wallswitch Sensor	Ceiling Sensor	Hours of Operation	Base kW	Proposed kW	Base kWh	Proposed kWh
510	JULIET UNIT COMMON	CENTRAL CONTROL ENTRY	1	60	1'x1' Square; Tamper-Proof Recessed Flanged Compact Fluorescent, quad, (2) 26W lamp Prismatic Acrylic Diffuser	1	14	Recessed Flanged Install LED Plug-in Lamp; Bypass Ballast Light Emitting Diode Lamp, Screw-in, (2) 8W lamp			200	0.06	0.01	12	3
511	JULIET UNIT COMMON	RESTROOM	1	60	1'x1' Square; Tamper-Proof Recessed Flanged Compact Fluorescent, quad, (2) 26W lamp Prismatic Acrylic Diffuser	1	14	Recessed Flanged Install LED Plug-in Lamp; Bypass Ballast Light Emitting Diode Lamp, Screw-in, (2) 8W lamp			1456	0.06	0.01	87	21
512	JULIET UNIT COMMON	CENTRAL CONTROL	3	101	2'x4' Troffer Recessed Fluorescent, (4) 48", T-8 lamp, Instant Start Ballast, NLO (BF: .85-.95) Prismatic Acrylic Diffuser	3	48	Recessed T8 LED Retrofit Lamp with External Driver LED 4' T8 Lamp (4) 12W Lamps			200	0.30	0.14	61	29
513	JULIET UNIT COMMON	CENTRAL CONTROL	2	60	1'x1' Square; Tamper-Proof Recessed Compact Fluorescent, quad, (2) 26W lamp Prismatic Acrylic Diffuser	2	14	Recessed Install LED Plug-in Lamp; Bypass Ballast Light Emitting Diode Lamp, Screw-in, (2) 8W lamp			200	0.12	0.03	24	6
514	JULIET UNIT COMMON	UPPER MECHANICAL ROOM	3	80	1'x4' Troffer; Tamper-proof Surface Mounted Fluorescent, (3) 48", T-8 lamp, Instant Start Ballast, NLO (BF: .85-.95) Prismatic Acrylic Diffuser	3	36	Surface Mounted T8 LED Retrofit Lamp with External Driver LED 4' T8 Lamp (3) 12W Lamps			520	0.24	0.11	125	56
515	JULIET UNIT COMMON	UPPER MECHANICAL ROOM	3	101	2'x4' Troffer; Tamper-proof Surface Mounted Fluorescent, (4) 48", T-8 lamp, Instant Start Ballast, NLO (BF: .85-.95) Prismatic Acrylic Diffuser	3	48	Surface Mounted T8 LED Retrofit Lamp with External Driver LED 4' T8 Lamp (4) 12W Lamps			520	0.30	0.14	158	74
516	JULIET UNIT COMMON	UPPER MECHANICAL ROOM	2	101	2'x4' Troffer; Tamper-proof Surface Mounted Fluorescent, (4) 48", T-8 lamp, Instant Start Ballast, NLO (BF: .85-.95) Prismatic Acrylic Diffuser	2	48	Surface Mounted T8 LED Retrofit Lamp with External Driver LED 4' T8 Lamp (4) 12W Lamps			520	0.20	0.10	105	49
517	JULIET UNIT COMMON	UPPER MECHANICAL ROOM	2	80	1'x4' Troffer; Tamper-proof Surface Mounted Fluorescent, (3) 48", T-8 lamp, Instant Start Ballast, NLO (BF: .85-.95) Prismatic Acrylic Diffuser	2	36	Surface Mounted T8 LED Retrofit Lamp with External Driver LED 4' T8 Lamp (3) 12W Lamps			520	0.16	0.07	84	37
518	JULIET UNIT COMMON	EXTERIOR PLUMBING CONTROL ROOM	4	53	4' Corner Vanity; Tamper-proof Surface Mounted Fluorescent, (2) 48", T-8 lamp, Instant Start Ballast, NLO (BF: .85-.95) Prismatic Acrylic Diffuser	4	24	Surface Mounted T8 LED Retrofit Lamp with External Driver LED 4' T8 Lamp (2) 12W Lamps			520	0.21	0.10	111	49
519	JULIET UNIT COMMON	EXTERIOR PLUMBING CONTROL ROOM	4	80	1'x4' Troffer; Tamper-proof Surface Mounted Fluorescent, (3) 48", T-8 lamp, Instant Start Ballast, NLO (BF: .85-.95) Prismatic Acrylic Diffuser	4	36	Surface Mounted T8 LED Retrofit Lamp with External Driver LED 4' T8 Lamp (3) 12W Lamps			520	0.32	0.14	167	74
520	KILO UNIT COMMON	K UNIT GUARD SHACK	2	53	4' Vapor Proof Surface Mounted Fluorescent, (2) 48", T-8 lamp, Instant Start Ballast, NLO (BF: .85-.95) Vapor Proof Gasketed Diffuser	2	24	Surface Mounted T8 LED Retrofit Lamp with External Driver LED 4' T8 Lamp (2) 12W Lamps			4380	0.11	0.05	466	208
521	KILO UNIT COMMON	KILO OPEN DAY ROOM	26	80	1'x4' Troffer; Tamper-proof Recessed Flanged Fluorescent, (3) 48", T-8 lamp, Instant Start Ballast, NLO (BF: .85-.95) Prismatic Acrylic Diffuser	26	36	Recessed Flanged T8 LED Retrofit Lamp with External Driver LED 4' T8 Lamp (3) 12W Lamps			8760	2.09	0.93	18,294	8,117
522	KILO UNIT COMMON	KILO OPEN DAY ROOM	2	3	Universal Face Exit Sign Surface Mounted EXIT Light Emitting Diode, (1) 3W lamp, Single Sided (No Diffuser)	2	3	Existing luminaire to remain as is No Retrofit. To remain as is.			8760	0.01	0.01	49	49
523	KILO UNIT COMMON	CENTRAL CONTROL	2	80	1'x4' Troffer; Tamper-proof Recessed Flanged Fluorescent, (3) 48", T-8 lamp, Instant Start Ballast, NLO (BF: .85-.95) Prismatic Acrylic Diffuser	2	36	Recessed Flanged T8 LED Retrofit Lamp with External Driver LED 4' T8 Lamp (3) 12W Lamps			3640	0.16	0.07	585	259
524	KILO UNIT COMMON	SUPPLY ROOM	2	80	1'x4' Troffer; Tamper-proof Recessed Flanged Fluorescent, (3) 48", T-8 lamp, Instant Start Ballast, NLO (BF: .85-.95) Prismatic Acrylic Diffuser	2	36	Recessed Flanged T8 LED Retrofit Lamp with External Driver LED 4' T8 Lamp (3) 12W Lamps			1456	0.16	0.07	234	104
525	KILO UNIT COMMON	COUNSELOR OFFICE	2	80	1'x4' Troffer; Tamper-proof Recessed Flanged Fluorescent, (3) 48", T-8 lamp, Instant Start Ballast, NLO (BF: .85-.95) Prismatic Acrylic Diffuser	2	36	Recessed Flanged T8 LED Retrofit Lamp with External Driver LED 4' T8 Lamp (3) 12W Lamps			3640	0.16	0.07	585	259
526	KILO UNIT COMMON	OFFICE	2	80	1'x4' Troffer; Tamper-proof Recessed Flanged Fluorescent, (3) 48", T-8 lamp, Instant Start Ballast, NLO (BF: .85-.95) Prismatic Acrylic Diffuser	2	36	Recessed Flanged T8 LED Retrofit Lamp with External Driver LED 4' T8 Lamp (3) 12W Lamps			3640	0.16	0.07	585	259
527	KILO UNIT COMMON	ELECTRICAL DATA ROOM	2	80	1'x4' Troffer; Tamper-proof Recessed Flanged Fluorescent, (3) 48", T-8 lamp, Instant Start Ballast, NLO (BF: .85-.95) Prismatic Acrylic Diffuser	2	36	Recessed Flanged T8 LED Retrofit Lamp with External Driver LED 4' T8 Lamp (3) 12W Lamps			520	0.16	0.07	84	37
528	KILO UNIT COMMON	STAFF RESTROOM	1	80	1'x4' Troffer; Tamper-proof Recessed Flanged Fluorescent, (3) 48", T-8 lamp, Instant Start Ballast, NLO (BF: .85-.95) Prismatic Acrylic Diffuser	1	36	Recessed Flanged T8 LED Retrofit Lamp with External Driver LED 4' T8 Lamp (3) 12W Lamps			1456	0.08	0.04	117	52
529	KILO UNIT COMMON	CUSTODIAL CLOSET	1	80	1'x4' Troffer; Tamper-proof Recessed Flanged Fluorescent, (3) 48", T-8 lamp, Instant Start Ballast, NLO (BF: .85-.95) Prismatic Acrylic Diffuser	1	36	Recessed Flanged T8 LED Retrofit Lamp with External Driver LED 4' T8 Lamp (3) 12W Lamps			1456	0.08	0.04	117	52
530	KILO UNIT ALPHA SIDE	ALPHA OPEN DORM	42	80	1'x4' Troffer; Tamper-proof Recessed Flanged Fluorescent, (3) 48", T-8 lamp, Instant Start Ballast, NLO (BF: .85-.95) Prismatic Acrylic Diffuser	42	36	Recessed Flanged T8 LED Retrofit Lamp with External Driver LED 4' T8 Lamp (3) 12W Lamps			2912	3.37	1.50	9,824	4,359
531	KILO UNIT ALPHA SIDE	ALPHA OPEN DORM	2	3	Universal Face Exit Sign Surface Mounted EXIT Light Emitting Diode, (1) 3W lamp, Single Sided (No Diffuser)	2	3	Existing luminaire to remain as is No Retrofit. To remain as is.			8760	0.01	0.01	49	49
532	KILO UNIT ALPHA SIDE	ALPHA STAFF RESTROOM	1	80	1'x4' Troffer; Tamper-proof Recessed Flanged Fluorescent, (3) 48", T-8 lamp, Instant Start Ballast, NLO (BF: .85-.95) Prismatic Acrylic Diffuser	1	36	Recessed Flanged T8 LED Retrofit Lamp with External Driver LED 4' T8 Lamp (3) 12W Lamps			1456	0.08	0.04	117	52
533	KILO UNIT ALPHA SIDE	ALPHA SHOWER ROOM	2	80	1'x4' Troffer; Tamper-proof Recessed Flanged Fluorescent, (3) 48", T-8 lamp, Instant Start Ballast, NLO (BF: .85-.95) Prismatic Acrylic Diffuser	2	36	Recessed Flanged T8 LED Retrofit Lamp with External Driver LED 4' T8 Lamp (3) 12W Lamps			8760	0.16	0.07	1,407	624
534	KILO UNIT BRAVO SIDE	BRAVO OPEN DORM	42	80	1'x4' Troffer; Tamper-proof Recessed Flanged Fluorescent, (3) 48", T-8 lamp, Instant Start Ballast, NLO (BF: .85-.95) Prismatic Acrylic Diffuser	42	36	Recessed Flanged T8 LED Retrofit Lamp with External Driver LED 4' T8 Lamp (3) 12W Lamps			2912	3.37	1.50	9,824	4,359
535	KILO UNIT BRAVO SIDE	BRAVO OPEN DORM	2	3	Universal Face Exit Sign Surface Mounted EXIT Light Emitting Diode, (1) 3W lamp, Single Sided (No Diffuser)	2	3	Existing luminaire to remain as is No Retrofit. To remain as is.			8760	0.01	0.01	49	49
536	KILO UNIT BRAVO SIDE	BRAVO STAFF RESTROOM	1	80	1'x4' Troffer; Tamper-proof Recessed Flanged Fluorescent, (3) 48", T-8 lamp, Instant Start Ballast, NLO (BF: .85-.95) Prismatic Acrylic Diffuser	1	36	Recessed Flanged T8 LED Retrofit Lamp with External Driver LED 4' T8 Lamp (3) 12W Lamps			1456	0.08	0.04	117	52
537	KILO UNIT BRAVO SIDE	BRAVO SHOWER ROOM	2	80	1'x4' Troffer; Tamper-proof Recessed Flanged Fluorescent, (3) 48", T-8 lamp, Instant Start Ballast, NLO (BF: .85-.95) Prismatic Acrylic Diffuser	2	36	Recessed Flanged T8 LED Retrofit Lamp with External Driver LED 4' T8 Lamp (3) 12W Lamps			8760	0.16	0.07	1,407	624
538	KILO UNIT COMMON	OUTSIDE MECHANICAL ROOM	2	80	1'x4' Troffer; Tamper-proof Recessed Flanged Fluorescent, (3) 48", T-8 lamp, Instant Start Ballast, NLO (BF: .85-.95) Prismatic Acrylic Diffuser	2	36	Recessed Flanged T8 LED Retrofit Lamp with External Driver LED 4' T8 Lamp (3) 12W Lamps			520	0.16	0.07	84	37
539	KILO UNIT COMMON	OUTSIDE MECHANICAL ROOM	2	80	1'x4' Troffer; Tamper-proof Recessed Flanged Fluorescent, (3) 48", T-8 lamp, Instant Start Ballast, NLO (BF: .85-.95) Prismatic Acrylic Diffuser	2	36	Recessed Flanged T8 LED Retrofit Lamp with External Driver LED 4' T8 Lamp (3) 12W Lamps			520	0.16	0.07	84	37

Line #	Facility Area	Space	Pre Fixture Qty	Pre Watts/ Fixt	Pre Description	Post Fixture Qty	Post Watt/ Fixt	Post Description	Wallswitch Sensor	Ceiling Sensor	Hours of Operation	Base kW	Proposed kW	Base kWh	Proposed kWh
540	HOTEL UNIT COMMON	H UNIT ENTRY	6	53	4' Wraparound; Tamper-proof Surface Mounted Fluorescent, (2) 48", T-8 lamp, Instant Start Ballast, NLO (BF: .85-.95) Prismatic Acrylic Diffuser	6	24	Surface Mounted T8 LED Retrofit Lamp with External Driver LED 4' T8 Lamp (2) 12W Lamps			8760	0.32	0.14	2,799	1,249
541	HOTEL UNIT COMMON	ISSUE ROOM	9	53	4' Wraparound; Tamper-proof Surface Mounted Fluorescent, (2) 48", T-8 lamp, Instant Start Ballast, NLO (BF: .85-.95) Prismatic Acrylic Diffuser	9	24	Surface Mounted T8 LED Retrofit Lamp with External Driver LED 4' T8 Lamp (2) 12W Lamps			3640	0.48	0.21	1,744	778
542	HOTEL UNIT COMMON	H404 SUPPLY ROOM	2	53	4' Wraparound; Tamper-proof Surface Mounted Fluorescent, (2) 48", T-8 lamp, Instant Start Ballast, NLO (BF: .85-.95) Prismatic Acrylic Diffuser	2	24	Surface Mounted T8 LED Retrofit Lamp with External Driver LED 4' T8 Lamp (2) 12W Lamps			1560	0.11	0.05	166	74
543	HOTEL UNIT COMMON	H UNIT CORRIDOR	18	53	4' Wraparound; Tamper-proof Surface Mounted Fluorescent, (2) 48", T-8 lamp, Instant Start Ballast, NLO (BF: .85-.95) Prismatic Acrylic Diffuser	18	24	Surface Mounted T8 LED Retrofit Lamp with External Driver LED 4' T8 Lamp (2) 12W Lamps			8760	0.96	0.43	8,396	3,746
544	HOTEL UNIT COMMON	H UNIT CORRIDOR	2	266	2'x2' Troffer Recessed Flanged Metal Halide, (1) 250W lamp Prismatic Acrylic Diffuser	2	49	Recessed Flanged Chip On Board (COB) Type Screw-in / Bypass Existing Ballast Light Emitting Diode Lamp, Screw-in, (1) 54W lamp			8760	0.53	0.10	4,664	851
545	HOTEL UNIT COMMON	H UNIT CORRIDOR	2	19	Universal Face Exit Sign Surface Mounted EXIT Compact Fluorescent, (2) 7W lamp (No Diffuser)	2	9	Surface Mounted Upgrade EXIT Sign LED Light Fixture. (1) 9W			8760	0.04	0.02	332	156
546	HOTEL UNIT COMMON	H406 MULTIPURPOSE ROOM	2	53	4' Wraparound; Tamper-proof Surface Mounted Fluorescent, (2) 48", T-8 lamp, Instant Start Ballast, NLO (BF: .85-.95) Prismatic Acrylic Diffuser	2	24	Surface Mounted T8 LED Retrofit Lamp with External Driver LED 4' T8 Lamp (2) 12W Lamps			3640	0.11	0.05	388	173
547	HOTEL UNIT COMMON	H405 STORAGE ROOM	2	53	4' Wraparound; Tamper-proof Surface Mounted Fluorescent, (2) 48", T-8 lamp, Instant Start Ballast, NLO (BF: .85-.95) Prismatic Acrylic Diffuser	2	24	Surface Mounted T8 LED Retrofit Lamp with External Driver LED 4' T8 Lamp (2) 12W Lamps			520	0.11	0.05	55	25
548	HOTEL UNIT COMMON	H407 INTERVIEW ROOM	2	101	4' Wraparound; Tamper-proof Surface Mounted Fluorescent, (4) 48", T-8 lamp, Instant Start Ballast, NLO (BF: .85-.95) Prismatic Acrylic Diffuser	2	48	Surface Mounted T8 LED Retrofit Lamp with External Driver LED 4' T8 Lamp (4) 12W Lamps			1560	0.20	0.10	315	148
549	HOTEL UNIT COMMON	STAFF RESTROOM	1	53	4' Wraparound; Tamper-proof Surface Mounted Fluorescent, (2) 48", T-8 lamp, Instant Start Ballast, NLO (BF: .85-.95) Prismatic Acrylic Diffuser	1	24	Surface Mounted T8 LED Retrofit Lamp with External Driver LED 4' T8 Lamp (2) 12W Lamps			1456	0.05	0.02	78	35
550	HOTEL UNIT COMMON	H410 TRIAGE ROOM	2	101	4' Wraparound; Tamper-proof Surface Mounted Fluorescent, (4) 48", T-8 lamp, Instant Start Ballast, NLO (BF: .85-.95) Prismatic Acrylic Diffuser	2	48	Surface Mounted T8 LED Retrofit Lamp with External Driver LED 4' T8 Lamp (4) 12W Lamps			3640	0.20	0.10	736	346
551	HOTEL UNIT COMMON	STORAGE ROOM	1	53	4' Wraparound; Tamper-proof Surface Mounted Fluorescent, (2) 48", T-8 lamp, Instant Start Ballast, NLO (BF: .85-.95) Prismatic Acrylic Diffuser	1	24	Surface Mounted T8 LED Retrofit Lamp with External Driver LED 4' T8 Lamp (2) 12W Lamps			520	0.05	0.02	28	12
552	HOTEL UNIT COMMON	SGT OFFICE	2	101	4' Wraparound; Tamper-proof Surface Mounted Fluorescent, (4) 48", T-8 lamp, Instant Start Ballast, NLO (BF: .85-.95) Prismatic Acrylic Diffuser	2	48	Surface Mounted T8 LED Retrofit Lamp with External Driver LED 4' T8 Lamp (4) 12W Lamps			3640	0.20	0.10	736	346
553	HOTEL UNIT COMMON	EQUIPMENT ROOM	2	101	4' Wraparound; Tamper-proof Surface Mounted Fluorescent, (4) 48", T-8 lamp, Instant Start Ballast, NLO (BF: .85-.95) Prismatic Acrylic Diffuser	2	48	Surface Mounted T8 LED Retrofit Lamp with External Driver LED 4' T8 Lamp (4) 12W Lamps			1560	0.20	0.10	315	148
554	HOTEL UNIT COMMON	H413 OFFICE	2	101	4' Wraparound; Tamper-proof Surface Mounted Fluorescent, (4) 48", T-8 lamp, Instant Start Ballast, NLO (BF: .85-.95) Prismatic Acrylic Diffuser	2	48	Surface Mounted T8 LED Retrofit Lamp with External Driver LED 4' T8 Lamp (4) 12W Lamps			3640	0.20	0.10	736	346
555	HOTEL UNIT COMMON	H414 OFFICE	2	101	4' Wraparound; Tamper-proof Surface Mounted Fluorescent, (4) 48", T-8 lamp, Instant Start Ballast, NLO (BF: .85-.95) Prismatic Acrylic Diffuser	2	48	Surface Mounted T8 LED Retrofit Lamp with External Driver LED 4' T8 Lamp (4) 12W Lamps			3640	0.20	0.10	736	346
556	HOTEL UNIT COMMON	H415 HEARING OFFICE	2	101	4' Wraparound; Tamper-proof Surface Mounted Fluorescent, (4) 48", T-8 lamp, Instant Start Ballast, NLO (BF: .85-.95) Prismatic Acrylic Diffuser	2	48	Surface Mounted T8 LED Retrofit Lamp with External Driver LED 4' T8 Lamp (4) 12W Lamps			3640	0.20	0.10	736	346
557	HOTEL UNIT COMMON	CUSTODIAL CLOSET (IN HALL)	1	53	4' Wraparound; Tamper-proof Surface Mounted Fluorescent, (2) 48", T-8 lamp, Instant Start Ballast, NLO (BF: .85-.95) Prismatic Acrylic Diffuser	1	24	Surface Mounted T8 LED Retrofit Lamp with External Driver LED 4' T8 Lamp (2) 12W Lamps			1456	0.05	0.02	78	35
558	HOTEL UNIT COMMON	H417 MINI LAW LIBRARY	3	101	4' Wraparound; Tamper-proof Surface Mounted Fluorescent, (4) 48", T-8 lamp, Instant Start Ballast, NLO (BF: .85-.95) Prismatic Acrylic Diffuser	3	48	Surface Mounted T8 LED Retrofit Lamp with External Driver LED 4' T8 Lamp (4) 12W Lamps			8760	0.30	0.14	2,656	1,249
559	HOTEL UNIT COMMON	CUSTODIAL SUPPLY	2	101	4' Wraparound; Tamper-proof Surface Mounted Fluorescent, (4) 48", T-8 lamp, Instant Start Ballast, NLO (BF: .85-.95) Prismatic Acrylic Diffuser	2	48	Surface Mounted T8 LED Retrofit Lamp with External Driver LED 4' T8 Lamp (4) 12W Lamps			1456	0.20	0.10	294	138
560	HOTEL UNIT COMMON	H313 CORRIDOR	16	53	4' Wraparound; Tamper-proof Surface Mounted Fluorescent, (2) 48", T-8 lamp, Instant Start Ballast, NLO (BF: .85-.95) Prismatic Acrylic Diffuser	16	24	Surface Mounted T8 LED Retrofit Lamp with External Driver LED 4' T8 Lamp (2) 12W Lamps			8760	0.85	0.38	7,463	3,330
561	HOTEL UNIT COMMON	H313 CORRIDOR	2	19	Universal Face Exit Sign Surface Mounted EXIT Compact Fluorescent, (2) 7W lamp (No Diffuser)	2	9	Surface Mounted Upgrade EXIT Sign LED Light Fixture. (1) 9W			8760	0.04	0.02	332	156
562	HOTEL UNIT COMMON	VISITOR CONTROL DESK	3	53	4' Wraparound; Tamper-proof Surface Mounted Fluorescent, (2) 48", T-8 lamp, Instant Start Ballast, NLO (BF: .85-.95) Prismatic Acrylic Diffuser	3	24	Surface Mounted T8 LED Retrofit Lamp with External Driver LED 4' T8 Lamp (2) 12W Lamps			8760	0.16	0.07	1,399	624
563	HOTEL UNIT COMMON	H312 INMATE RESTROOM	1	53	4' Wraparound; Tamper-proof Surface Mounted Fluorescent, (2) 48", T-8 lamp, Instant Start Ballast, NLO (BF: .85-.95) Prismatic Acrylic Diffuser	1	24	Surface Mounted T8 LED Retrofit Lamp with External Driver LED 4' T8 Lamp (2) 12W Lamps			1456	0.05	0.02	78	35
564	HOTEL UNIT COMMON	H313 OFFICE	4	53	4' Wraparound; Tamper-proof Surface Mounted Fluorescent, (2) 48", T-8 lamp, Instant Start Ballast, NLO (BF: .85-.95) Prismatic Acrylic Diffuser	4	24	Surface Mounted T8 LED Retrofit Lamp with External Driver LED 4' T8 Lamp (2) 12W Lamps			3640	0.21	0.10	775	346
565	HOTEL UNIT COMMON	H314 PROPERTY STORAGE	2	53	4' Wraparound; Tamper-proof Surface Mounted Fluorescent, (2) 48", T-8 lamp, Instant Start Ballast, NLO (BF: .85-.95) Prismatic Acrylic Diffuser	2	24	Surface Mounted T8 LED Retrofit Lamp with External Driver LED 4' T8 Lamp (2) 12W Lamps			520	0.11	0.05	55	25
566	HOTEL UNIT COMMON	ATION ROOM 3-7 (BOTH INMATE AND VISTOI	10	53	4' Wraparound; Tamper-proof Surface Mounted Fluorescent, (2) 48", T-8 lamp, Instant Start Ballast, NLO (BF: .85-.95) Prismatic Acrylic Diffuser	10	24	Surface Mounted T8 LED Retrofit Lamp with External Driver LED 4' T8 Lamp (2) 12W Lamps			8760	0.53	0.24	4,664	2,081
567	HOTEL UNIT COMMON	IRT ROOM	2	101	4' Wraparound; Tamper-proof Surface Mounted Fluorescent, (4) 48", T-8 lamp, Instant Start Ballast, NLO (BF: .85-.95) Prismatic Acrylic Diffuser	2	48	Surface Mounted T8 LED Retrofit Lamp with External Driver LED 4' T8 Lamp (4) 12W Lamps			1560	0.20	0.10	315	148
568	HOTEL UNIT COMMON	MENS VISITORS RESTROOM	1	53	4' Wraparound; Tamper-proof Surface Mounted Fluorescent, (2) 48", T-8 lamp, Instant Start Ballast, NLO (BF: .85-.95) Prismatic Acrylic Diffuser	1	24	Surface Mounted T8 LED Retrofit Lamp with External Driver LED 4' T8 Lamp (2) 12W Lamps			1456	0.05	0.02	78	35
569	HOTEL UNIT COMMON	WOMENS VISITORS RESTROOM	1	53	4' Wraparound; Tamper-proof Surface Mounted Fluorescent, (2) 48", T-8 lamp, Instant Start Ballast, NLO (BF: .85-.95) Prismatic Acrylic Diffuser	1	24	Surface Mounted T8 LED Retrofit Lamp with External Driver LED 4' T8 Lamp (2) 12W Lamps			1456	0.05	0.02	78	35

Line #	Facility Area	Space	Pre Fixture Qty	Pre Watts/ Fixt	Pre Description	Post Fixture Qty	Post Watt/ Fixt	Post Description	Wallswitch Sensor	Ceiling Sensor	Hours of Operation	Base kW	Proposed kW	Base kWh	Proposed kWh
570	HOTEL UNIT COMMON	H UNIT PENTHOUSE MECHANICAL	30	53	4' Industrial Surface Mounted Fluorescent, (2) 48", T-8 lamp, Instant Start Ballast, NLO (BF: .85-.95) (No Diffuser)	30	24	Surface Mounted T8 LED Retrofit Lamp with External Driver LED 4' T8 Lamp (2) 12W Lamps			520	1.60	0.71	831	371
571	HOTEL UNIT COMMON	H UNIT PENTHOUSE MECHANICAL	3	53	4' Vapor Proof Surface Mounted Fluorescent, (2) 48", T-8 lamp, Instant Start Ballast, NLO (BF: .85-.95) (No Diffuser)	3	24	Surface Mounted T8 LED Retrofit Lamp with External Driver LED 4' T8 Lamp (2) 12W Lamps			520	0.16	0.07	83	37
572	HOTEL UNIT COMMON	2.003 ELECTRICAL ROOM	6	53	4' Industrial Surface Mounted Fluorescent, (2) 48", T-8 lamp, Instant Start Ballast, NLO (BF: .85-.95) (No Diffuser)	6	24	Surface Mounted T8 LED Retrofit Lamp with External Driver LED 4' T8 Lamp (2) 12W Lamps			520	0.32	0.14	166	74
573	HOTEL UNIT ALPHA SIDE	ALPHA SIDE OPEN DAY ROOM	10	266	2'x2' Troffer Recessed Flanged Metal Halide, (1) 250W lamp Prismatic Acrylic Diffuser	10	49	Recessed Flanged Chip On Board (COB) Type Screw-in / Bypass Existing Ballast Light Emitting Diode Lamp, Screw-in, (1) 54W lamp			8760	2.66	0.49	23,322	4,257
574	HOTEL UNIT ALPHA SIDE	ALPHA SIDE OPEN DAY ROOM	3	19	Universal Face Exit Sign Surface Mounted EXIT Compact Fluorescent, (2) 7W lamp (No Diffuser)	3	9	Surface Mounted Upgrade EXIT Sign LED Light Fixture. (1) 9W			8760	0.06	0.03	498	234
575	HOTEL UNIT ALPHA SIDE	ALPHA SHOWER ROOM	2	30	2' Wraparound; Tamper-proof Surface Mounted Fluorescent, (2) 24", T-8 lamp, Instant Start Ballast, NLO (BF: .85-.95) Prismatic Acrylic Diffuser	2	16	Surface Mounted T8 LED Retrofit Lamp with External Driver LED 2' T8 Lamp (2) 8W Lamps			8760	0.06	0.03	522	278
576	HOTEL UNIT ALPHA SIDE	H103 STORAGE ROOM	3	53	4' Wraparound; Tamper-proof Surface Mounted Fluorescent, (2) 48", T-8 lamp, Instant Start Ballast, NLO (BF: .85-.95) Prismatic Acrylic Diffuser	3	24	Surface Mounted T8 LED Retrofit Lamp with External Driver LED 4' T8 Lamp (2) 12W Lamps			520	0.16	0.07	83	37
577	HOTEL UNIT ALPHA SIDE	H104 CUSTODIAL CLOSET	1	53	4' Wraparound; Tamper-proof Surface Mounted Fluorescent, (2) 48", T-8 lamp, Instant Start Ballast, NLO (BF: .85-.95) Prismatic Acrylic Diffuser	1	24	Surface Mounted T8 LED Retrofit Lamp with External Driver LED 4' T8 Lamp (2) 12W Lamps			1456	0.05	0.02	78	35
578	HOTEL UNIT ALPHA SIDE	STORAGE ROOM	1	53	4' Wraparound; Tamper-proof Surface Mounted Fluorescent, (2) 48", T-8 lamp, Instant Start Ballast, NLO (BF: .85-.95) Prismatic Acrylic Diffuser	1	24	Surface Mounted T8 LED Retrofit Lamp with External Driver LED 4' T8 Lamp (2) 12W Lamps			520	0.05	0.02	28	12
579	HOTEL UNIT ALPHA SIDE	HA CELLS 1-24	24	80	4' Wraparound; Tamper-proof Surface Mounted Fluorescent, (3) 48", T-8 lamp, Instant Start Ballast, NLO (BF: .85-.95) Prismatic Acrylic Diffuser	24	36	Surface Mounted T8 LED Retrofit Lamp with External Driver LED 4' T8 Lamp (3) 12W Lamps			2912	1.93	0.86	5,614	2,491
580	HOTEL UNIT ALPHA SIDE	H103 MULTIPURPOSE ROOM	2	101	4' Wraparound; Tamper-proof Surface Mounted Fluorescent, (4) 48", T-8 lamp, Instant Start Ballast, NLO (BF: .85-.95) Prismatic Acrylic Diffuser	2	48	Surface Mounted T8 LED Retrofit Lamp with External Driver LED 4' T8 Lamp (4) 12W Lamps			3640	0.20	0.10	736	346
581	HOTEL UNIT ALPHA SIDE	H214 UPPER CUSTODIAL CLOSET	1	53	4' Wraparound; Tamper-proof Surface Mounted Fluorescent, (2) 48", T-8 lamp, Instant Start Ballast, NLO (BF: .85-.95) Prismatic Acrylic Diffuser	1	24	Surface Mounted T8 LED Retrofit Lamp with External Driver LED 4' T8 Lamp (2) 12W Lamps			1456	0.05	0.02	78	35
582	HOTEL UNIT ALPHA SIDE	UPPER SHOWERS	2	30	2' Wraparound; Tamper-proof Surface Mounted Fluorescent, (2) 24", T-8 lamp, Instant Start Ballast, NLO (BF: .85-.95) Prismatic Acrylic Diffuser	2	16	Surface Mounted T8 LED Retrofit Lamp with External Driver LED 2' T8 Lamp (2) 8W Lamps			8760	0.06	0.03	522	278
583	HOTEL UNIT BRAVO SIDE	BRAVO SIDE OPEN DAY ROOM	10	266	2'x2' Troffer Recessed Flanged Metal Halide, (1) 250W lamp Prismatic Acrylic Diffuser	10	49	Recessed Flanged Chip On Board (COB) Type Screw-in / Bypass Existing Ballast Light Emitting Diode Lamp, Screw-in, (1) 54W lamp			8760	2.66	0.49	23,322	4,257
584	HOTEL UNIT BRAVO SIDE	BRAVO SIDE OPEN DAY ROOM	3	19	Universal Face Exit Sign Surface Mounted EXIT Compact Fluorescent, (2) 7W lamp (No Diffuser)	3	9	Surface Mounted Upgrade EXIT Sign LED Light Fixture. (1) 9W			8760	0.06	0.03	498	234
585	HOTEL UNIT BRAVO SIDE	BRAVO SHOWER ROOM	2	30	2' Wraparound; Tamper-proof Surface Mounted Fluorescent, (2) 24", T-8 lamp, Instant Start Ballast, NLO (BF: .85-.95) Prismatic Acrylic Diffuser	2	16	Surface Mounted T8 LED Retrofit Lamp with External Driver LED 2' T8 Lamp (2) 8W Lamps			8760	0.06	0.03	522	278
586	HOTEL UNIT BRAVO SIDE	H103 STORAGE ROOM	3	53	4' Wraparound; Tamper-proof Surface Mounted Fluorescent, (2) 48", T-8 lamp, Instant Start Ballast, NLO (BF: .85-.95) Prismatic Acrylic Diffuser	3	24	Surface Mounted T8 LED Retrofit Lamp with External Driver LED 4' T8 Lamp (2) 12W Lamps			520	0.16	0.07	83	37
587	HOTEL UNIT BRAVO SIDE	H104 CUSTODIAL CLOSET	1	53	4' Wraparound; Tamper-proof Surface Mounted Fluorescent, (2) 48", T-8 lamp, Instant Start Ballast, NLO (BF: .85-.95) Prismatic Acrylic Diffuser	1	24	Surface Mounted T8 LED Retrofit Lamp with External Driver LED 4' T8 Lamp (2) 12W Lamps			1456	0.05	0.02	78	35
588	HOTEL UNIT BRAVO SIDE	STORAGE ROOM	1	53	4' Wraparound; Tamper-proof Surface Mounted Fluorescent, (2) 48", T-8 lamp, Instant Start Ballast, NLO (BF: .85-.95) Prismatic Acrylic Diffuser	1	24	Surface Mounted T8 LED Retrofit Lamp with External Driver LED 4' T8 Lamp (2) 12W Lamps			520	0.05	0.02	28	12
589	HOTEL UNIT BRAVO SIDE	HB CELLS 1-24	24	80	4' Wraparound; Tamper-proof Surface Mounted Fluorescent, (3) 48", T-8 lamp, Instant Start Ballast, NLO (BF: .85-.95) Prismatic Acrylic Diffuser	24	36	Surface Mounted T8 LED Retrofit Lamp with External Driver LED 4' T8 Lamp (3) 12W Lamps			2912	1.93	0.86	5,614	2,491
590	HOTEL UNIT BRAVO SIDE	H103 MULTIPURPOSE ROOM	2	101	4' Wraparound; Tamper-proof Surface Mounted Fluorescent, (4) 48", T-8 lamp, Instant Start Ballast, NLO (BF: .85-.95) Prismatic Acrylic Diffuser	2	48	Surface Mounted T8 LED Retrofit Lamp with External Driver LED 4' T8 Lamp (4) 12W Lamps			1456	0.20	0.10	294	138
591	HOTEL UNIT BRAVO SIDE	H214 UPPER CUSTODIAL CLOSET	1	53	4' Wraparound; Tamper-proof Surface Mounted Fluorescent, (2) 48", T-8 lamp, Instant Start Ballast, NLO (BF: .85-.95) Prismatic Acrylic Diffuser	1	24	Surface Mounted T8 LED Retrofit Lamp with External Driver LED 4' T8 Lamp (2) 12W Lamps			1456	0.05	0.02	78	35
592	HOTEL UNIT BRAVO SIDE	UPPER SHOWERS	2	30	2' Wraparound; Tamper-proof Surface Mounted Fluorescent, (2) 24", T-8 lamp, Instant Start Ballast, NLO (BF: .85-.95) Prismatic Acrylic Diffuser	2	16	Surface Mounted T8 LED Retrofit Lamp with External Driver LED 2' T8 Lamp (2) 8W Lamps			8760	0.06	0.03	522	278
593	HOTEL UNIT CHARLIE SIDE	CHARLIE SIDE OPEN DAY ROOM	10	266	2'x2' Troffer Recessed Flanged Metal Halide, (1) 250W lamp Prismatic Acrylic Diffuser	10	49	Recessed Flanged Chip On Board (COB) Type Screw-in / Bypass Existing Ballast Light Emitting Diode Lamp, Screw-in, (1) 54W lamp			8760	2.66	0.49	23,322	4,257
594	HOTEL UNIT CHARLIE SIDE	CHARLIE SIDE OPEN DAY ROOM	3	19	Universal Face Exit Sign Surface Mounted EXIT Compact Fluorescent, (2) 7W lamp (No Diffuser)	3	9	Surface Mounted Upgrade EXIT Sign LED Light Fixture. (1) 9W			8760	0.06	0.03	498	234
595	HOTEL UNIT CHARLIE SIDE	CHARLIE SHOWER ROOM	2	30	2' Wraparound; Tamper-proof Surface Mounted Fluorescent, (2) 24", T-8 lamp, Instant Start Ballast, NLO (BF: .85-.95) Prismatic Acrylic Diffuser	2	16	Surface Mounted T8 LED Retrofit Lamp with External Driver LED 2' T8 Lamp (2) 8W Lamps			8760	0.06	0.03	522	278
596	HOTEL UNIT CHARLIE SIDE	H103 STORAGE ROOM	3	53	4' Wraparound; Tamper-proof Surface Mounted Fluorescent, (2) 48", T-8 lamp, Instant Start Ballast, NLO (BF: .85-.95) Prismatic Acrylic Diffuser	3	24	Surface Mounted T8 LED Retrofit Lamp with External Driver LED 4' T8 Lamp (2) 12W Lamps			520	0.16	0.07	83	37
597	HOTEL UNIT CHARLIE SIDE	H104 CUSTODIAL CLOSET	1	53	4' Wraparound; Tamper-proof Surface Mounted Fluorescent, (2) 48", T-8 lamp, Instant Start Ballast, NLO (BF: .85-.95) Prismatic Acrylic Diffuser	1	24	Surface Mounted T8 LED Retrofit Lamp with External Driver LED 4' T8 Lamp (2) 12W Lamps			1456	0.05	0.02	78	35
598	HOTEL UNIT CHARLIE SIDE	STORAGE ROOM	1	53	4' Wraparound; Tamper-proof Surface Mounted Fluorescent, (2) 48", T-8 lamp, Instant Start Ballast, NLO (BF: .85-.95) Prismatic Acrylic Diffuser	1	24	Surface Mounted T8 LED Retrofit Lamp with External Driver LED 4' T8 Lamp (2) 12W Lamps			520	0.05	0.02	28	12
599	HOTEL UNIT CHARLIE SIDE	HC CELLS 1-24	24	80	4' Wraparound; Tamper-proof Surface Mounted Fluorescent, (3) 48", T-8 lamp, Instant Start Ballast, NLO (BF: .85-.95) Prismatic Acrylic Diffuser	24	36	Surface Mounted T8 LED Retrofit Lamp with External Driver LED 4' T8 Lamp (3) 12W Lamps			2912	1.93	0.86	5,614	2,491

Line #	Facility Area	Space	Pre Fixture Qty	Pre Watts/ Fixt	Pre Description	Post Fixture Qty	Post Watt/ Fixt	Post Description	Wallswitch Sensor	Ceiling Sensor	Hours of Operation	Base kW	Proposed kW	Base kWh	Proposed kWh
600	HOTEL UNIT CHARLIE SIDE	H103 MULTIPURPOSE ROOM	2	101	4' Wraparound; Tamper-proof Surface Mounted Fluorescent, (4) 48", T-8 lamp, Instant Start Ballast, NLO (BF: .85-.95) Prismatic Acrylic Diffuser	2	48	Surface Mounted T8 LED Retrofit Lamp with External Driver LED 4' T8 Lamp (4) 12W Lamps			3640	0.20	0.10	736	346
601	HOTEL UNIT CHARLIE SIDE	H214 UPPER CUSTODIAL CLOSET	1	53	4' Wraparound; Tamper-proof Surface Mounted Fluorescent, (2) 48", T-8 lamp, Instant Start Ballast, NLO (BF: .85-.95) Prismatic Acrylic Diffuser	1	24	Surface Mounted T8 LED Retrofit Lamp with External Driver LED 4' T8 Lamp (2) 12W Lamps			1456	0.05	0.02	78	35
602	HOTEL UNIT CHARLIE SIDE	UPPER SHOWERS	2	30	2' Wraparound; Tamper-proof Surface Mounted Fluorescent, (2) 24", T-8 lamp, Instant Start Ballast, NLO (BF: .85-.95) Prismatic Acrylic Diffuser	2	16	Surface Mounted T8 LED Retrofit Lamp with External Driver LED 2' T8 Lamp (2) 8W Lamps			8760	0.06	0.03	522	278
603	HOTEL UNIT DELTA SIDE	DELTA SIDE OPEN DAY ROOM	10	266	2'x2' Troffer Recessed Flanged Metal Halide, (1) 250W lamp Prismatic Acrylic Diffuser	10	49	Recessed Flanged Chip On Board (COB) Type Screw-in / Bypass Existing Ballast Light Emitting Diode Lamp, Screw-in, (1) 54W lamp			8760	2.66	0.49	23,322	4,257
604	HOTEL UNIT DELTA SIDE	DELTA SIDE OPEN DAY ROOM	3	19	Universal Face Exit Sign Surface Mounted EXIT Compact Fluorescent, (2) 7W lamp (No Diffuser)	3	9	Surface Mounted Upgrade EXIT Sign LED Light Fixture. (1) 9W			8760	0.06	0.03	498	234
605	HOTEL UNIT DELTA SIDE	DELTA SHOWER ROOM	2	30	2' Wraparound; Tamper-proof Surface Mounted Fluorescent, (2) 24", T-8 lamp, Instant Start Ballast, NLO (BF: .85-.95) Prismatic Acrylic Diffuser	2	16	Surface Mounted T8 LED Retrofit Lamp with External Driver LED 2' T8 Lamp (2) 8W Lamps			8760	0.06	0.03	522	278
606	HOTEL UNIT DELTA SIDE	H103 STORAGE ROOM	3	53	4' Wraparound; Tamper-proof Surface Mounted Fluorescent, (2) 48", T-8 lamp, Instant Start Ballast, NLO (BF: .85-.95) Prismatic Acrylic Diffuser	3	24	Surface Mounted T8 LED Retrofit Lamp with External Driver LED 4' T8 Lamp (2) 12W Lamps			520	0.16	0.07	83	37
607	HOTEL UNIT DELTA SIDE	H104 CUSTODIAL CLOSET	1	53	4' Wraparound; Tamper-proof Surface Mounted Fluorescent, (2) 48", T-8 lamp, Instant Start Ballast, NLO (BF: .85-.95) Prismatic Acrylic Diffuser	1	24	Surface Mounted T8 LED Retrofit Lamp with External Driver LED 4' T8 Lamp (2) 12W Lamps			1456	0.05	0.02	78	35
608	HOTEL UNIT DELTA SIDE	STORAGE ROOM	1	53	4' Wraparound; Tamper-proof Surface Mounted Fluorescent, (2) 48", T-8 lamp, Instant Start Ballast, NLO (BF: .85-.95) Prismatic Acrylic Diffuser	1	24	Surface Mounted T8 LED Retrofit Lamp with External Driver LED 4' T8 Lamp (2) 12W Lamps			520	0.05	0.02	28	12
609	HOTEL UNIT DELTA SIDE	HD CELLS 1-24	24	80	4' Wraparound; Tamper-proof Surface Mounted Fluorescent, (3) 48", T-8 lamp, Instant Start Ballast, NLO (BF: .85-.95) Prismatic Acrylic Diffuser	24	36	Surface Mounted T8 LED Retrofit Lamp with External Driver LED 4' T8 Lamp (3) 12W Lamps			2912	1.93	0.86	5,614	2,491
610	HOTEL UNIT DELTA SIDE	H103 MULTIPURPOSE ROOM	2	101	4' Wraparound; Tamper-proof Surface Mounted Fluorescent, (4) 48", T-8 lamp, Instant Start Ballast, NLO (BF: .85-.95) Prismatic Acrylic Diffuser	2	48	Surface Mounted T8 LED Retrofit Lamp with External Driver LED 4' T8 Lamp (4) 12W Lamps			3640	0.20	0.10	736	346
611	HOTEL UNIT DELTA SIDE	H214 UPPER CUSTODIAL CLOSET	1	53	4' Wraparound; Tamper-proof Surface Mounted Fluorescent, (2) 48", T-8 lamp, Instant Start Ballast, NLO (BF: .85-.95) Prismatic Acrylic Diffuser	1	24	Surface Mounted T8 LED Retrofit Lamp with External Driver LED 4' T8 Lamp (2) 12W Lamps			1456	0.05	0.02	78	35
612	HOTEL UNIT DELTA SIDE	UPPER SHOWERS	2	30	2' Wraparound; Tamper-proof Surface Mounted Fluorescent, (2) 24", T-8 lamp, Instant Start Ballast, NLO (BF: .85-.95) Prismatic Acrylic Diffuser	2	16	Surface Mounted T8 LED Retrofit Lamp with External Driver LED 2' T8 Lamp (2) 8W Lamps			8760	0.06	0.03	522	278
613	EDUCATION BUILDING	MAIN ENTRY NORTH	1	80	2'x4' Troffer Recessed Fluorescent, (3) 48", T-8 lamp, Instant Start Ballast, NLO (BF: .85-.95) Prismatic Acrylic Diffuser	1	36	Recessed T8 LED Retrofit Lamp with External Driver LED 4' T8 Lamp (3) 12W Lamps			8760	0.08	0.04	704	312
614	EDUCATION BUILDING	MAIN CORRIDOR NORTH	6	53	2'x4' Troffer Recessed Fluorescent, (2) 48", T-8 lamp, Instant Start Ballast, NLO (BF: .85-.95) Prismatic Acrylic Diffuser	6	24	Recessed T8 LED Retrofit Lamp with External Driver LED 4' T8 Lamp (2) 12W Lamps			8760	0.32	0.14	2,799	1,249
615	EDUCATION BUILDING	MAIN CORRIDOR NORTH	7	80	2'x4' Troffer Recessed Fluorescent, (3) 48", T-8 lamp, Instant Start Ballast, NLO (BF: .85-.95) Prismatic Acrylic Diffuser	7	36	Recessed T8 LED Retrofit Lamp with External Driver LED 4' T8 Lamp (3) 12W Lamps			8760	0.56	0.25	4,925	2,185
616	EDUCATION BUILDING	MAIN CORRIDOR SOUTH	45	53	2'x4' Troffer Recessed Fluorescent, (2) 48", T-8 lamp, Instant Start Ballast, NLO (BF: .85-.95) Prismatic Acrylic Diffuser	45	24	Recessed T8 LED Retrofit Lamp with External Driver LED 4' T8 Lamp (2) 12W Lamps			8760	2.40	1.07	20,990	9,366
617	EDUCATION BUILDING	MAIN CORRIDOR SOUTH	1	80	2'x4' Troffer Recessed Fluorescent, (3) 48", T-8 lamp, Instant Start Ballast, NLO (BF: .85-.95) Prismatic Acrylic Diffuser	1	36	Recessed T8 LED Retrofit Lamp with External Driver LED 4' T8 Lamp (3) 12W Lamps			8760	0.08	0.04	704	312
618	EDUCATION BUILDING	MAIN CORRIDOR SOUTH	9	53	2'x4' Troffer Recessed Flanged Fluorescent, (2) 48", T-8 lamp, Instant Start Ballast, NLO (BF: .85-.95) Prismatic Acrylic Diffuser	9	24	Recessed Flanged T8 LED Retrofit Lamp with External Driver LED 4' T8 Lamp (2) 12W Lamps			8760	0.48	0.21	4,198	1,873
619	EDUCATION BUILDING	7.211 OPEN OFFICE	3	80	2'x4' Troffer Recessed Fluorescent, (3) 48", T-8 lamp, Instant Start Ballast, NLO (BF: .85-.95) Prismatic Acrylic Diffuser	3	36	Recessed T8 LED Retrofit Lamp with External Driver LED 4' T8 Lamp (3) 12W Lamps	1		6570	0.24	0.11	2,111	937
620	EDUCATION BUILDING	T05 OFFICE	2	80	2'x4' Troffer Recessed Fluorescent, (3) 48", T-8 lamp, Instant Start Ballast, NLO (BF: .85-.95) Prismatic Acrylic Diffuser	2	36	Recessed T8 LED Retrofit Lamp with External Driver LED 4' T8 Lamp (3) 12W Lamps	1		2730	0.16	0.07	585	259
621	EDUCATION BUILDING	T04 OFFICE	2	80	2'x4' Troffer Recessed Fluorescent, (3) 48", T-8 lamp, Instant Start Ballast, NLO (BF: .85-.95) Prismatic Acrylic Diffuser	2	36	Recessed T8 LED Retrofit Lamp with External Driver LED 4' T8 Lamp (3) 12W Lamps	1		2730	0.16	0.07	585	259
622	EDUCATION BUILDING	7.205 OFFICE	2	53	2'x2' Troffer Recessed Fluorescent, (2) U-Tube, T-8 lamp, Instant Start Ballast Prismatic Acrylic Diffuser	2	24	Recessed Install 2x2 3-Lamp White Reflector Kit	1		2730	0.11	0.05	388	173
623	EDUCATION BUILDING	T03 OFFICE	2	80	2'x4' Troffer Recessed Fluorescent, (3) 48", T-8 lamp, Instant Start Ballast, NLO (BF: .85-.95) Prismatic Acrylic Diffuser	2	36	Recessed T8 LED Retrofit Lamp with External Driver LED 4' T8 Lamp (3) 12W Lamps	1		2730	0.16	0.07	585	259
624	EDUCATION BUILDING	T02 OFFICE	2	80	2'x4' Troffer Recessed Fluorescent, (3) 48", T-8 lamp, Instant Start Ballast, NLO (BF: .85-.95) Prismatic Acrylic Diffuser	2	36	Recessed T8 LED Retrofit Lamp with External Driver LED 4' T8 Lamp (3) 12W Lamps	1		2730	0.16	0.07	585	259
625	EDUCATION BUILDING	7.206 OFFICE	2	80	2'x4' Troffer Recessed Fluorescent, (3) 48", T-8 lamp, Instant Start Ballast, NLO (BF: .85-.95) Prismatic Acrylic Diffuser	2	36	Recessed T8 LED Retrofit Lamp with External Driver LED 4' T8 Lamp (3) 12W Lamps	1		2730	0.16	0.07	585	259
626	EDUCATION BUILDING	7.333 COUNSELING ROOM	4	80	2'x4' Troffer Recessed Fluorescent, (3) 48", T-8 lamp, Instant Start Ballast, NLO (BF: .85-.95) Prismatic Acrylic Diffuser	4	36	Recessed T8 LED Retrofit Lamp with External Driver LED 4' T8 Lamp (3) 12W Lamps			3640	0.32	0.14	1,169	519
627	EDUCATION BUILDING	T06 CHAPEL ROOM	12	61	Chandelier Chain Mounted Compact Fluorescent, spiral, (1) 68W lamp Prismatic Acrylic Diffuser	12	41	Chain Mounted Chip On Board (COB) Type Screw-in / Bypass Existing Ballast Light Emitting Diode Lamp, Screw-in, (1) 45W lamp			3640	0.74	0.49	2,681	1,769
628	EDUCATION BUILDING	COPY ROOM	4	80	2'x4' Troffer Recessed Fluorescent, (3) 48", T-8 lamp, Instant Start Ballast, NLO (BF: .85-.95) Prismatic Acrylic Diffuser	4	36	Recessed T8 LED Retrofit Lamp with External Driver LED 4' T8 Lamp (3) 12W Lamps			3640	0.32	0.14	1,169	519
629	EDUCATION BUILDING	OFFICE	2	80	2'x4' Troffer Recessed Fluorescent, (3) 48", T-8 lamp, Instant Start Ballast, NLO (BF: .85-.95) Prismatic Acrylic Diffuser	2	36	Recessed T8 LED Retrofit Lamp with External Driver LED 4' T8 Lamp (3) 12W Lamps	1		2730	0.16	0.07	585	259

Line #	Facility Area	Space	Pre Fixture Qty	Pre Watts/ Fixt	Pre Description	Post Fixture Qty	Post Watt/ Fixt	Post Description	Wallswitch Sensor	Ceiling Sensor	Hours of Operation	Base kW	Proposed kW	Base kWh	Proposed kWh
630	EDUCATION BUILDING	7.330 RESTROOM	1	53	4' Wraparound; Tamper-proof Surface Mounted Fluorescent, (2) 48", T-8 lamp, Instant Start Ballast, NLO (BF: .85-.95) Prismatic Acrylic Diffuser	1	24	Surface Mounted T8 LED Retrofit Lamp with External Driver LED 4' T8 Lamp (2) 12W Lamps	1		1092	0.05	0.02	78	35
631	EDUCATION BUILDING	7.329 RESTROOM	1	53	4' Wraparound; Tamper-proof Surface Mounted Fluorescent, (2) 48", T-8 lamp, Instant Start Ballast, NLO (BF: .85-.95) Prismatic Acrylic Diffuser	1	24	Surface Mounted T8 LED Retrofit Lamp with External Driver LED 4' T8 Lamp (2) 12W Lamps	1		1092	0.05	0.02	78	35
632	EDUCATION BUILDING	7.309 CORRIDOR	6	53	2'x4' Troffer Recessed Fluorescent, (2) 48", T-8 lamp, Instant Start Ballast, NLO (BF: .85-.95) Prismatic Acrylic Diffuser	6	24	Recessed T8 LED Retrofit Lamp with External Driver LED 4' T8 Lamp (2) 12W Lamps			8760	0.32	0.14	2,799	1,249
633	EDUCATION BUILDING	7.309 CORRIDOR	1	80	2'x4' Troffer Recessed Fluorescent, (3) 48", T-8 lamp, Instant Start Ballast, NLO (BF: .85-.95) Prismatic Acrylic Diffuser	1	36	Recessed T8 LED Retrofit Lamp with External Driver LED 4' T8 Lamp (3) 12W Lamps			8760	0.08	0.04	704	312
634	EDUCATION BUILDING	T07 OFFICE	2	53	2'x4' Troffer Recessed Fluorescent, (2) 48", T-8 lamp, Instant Start Ballast, NLO (BF: .85-.95) Prismatic Acrylic Diffuser	2	24	Recessed T8 LED Retrofit Lamp with External Driver LED 4' T8 Lamp (2) 12W Lamps	1		2730	0.11	0.05	388	173
635	EDUCATION BUILDING	T08 OFFICE	2	53	2'x4' Troffer Recessed Fluorescent, (2) 48", T-8 lamp, Instant Start Ballast, NLO (BF: .85-.95) Prismatic Acrylic Diffuser	2	24	Recessed T8 LED Retrofit Lamp with External Driver LED 4' T8 Lamp (2) 12W Lamps	1		2730	0.11	0.05	388	173
636	EDUCATION BUILDING	T18 OFFICE	2	53	2'x4' Troffer Recessed Fluorescent, (2) 48", T-8 lamp, Instant Start Ballast, NLO (BF: .85-.95) Prismatic Acrylic Diffuser	2	24	Recessed T8 LED Retrofit Lamp with External Driver LED 4' T8 Lamp (2) 12W Lamps	1		2730	0.11	0.05	388	173
637	EDUCATION BUILDING	T17 OFFICE	2	53	2'x4' Troffer Recessed Fluorescent, (2) 48", T-8 lamp, Instant Start Ballast, NLO (BF: .85-.95) Prismatic Acrylic Diffuser	2	24	Recessed T8 LED Retrofit Lamp with External Driver LED 4' T8 Lamp (2) 12W Lamps	1		2730	0.11	0.05	388	173
638	EDUCATION BUILDING	T10 OFFICE	2	53	2'x4' Troffer Recessed Fluorescent, (2) 48", T-8 lamp, Instant Start Ballast, NLO (BF: .85-.95) Prismatic Acrylic Diffuser	2	24	Recessed T8 LED Retrofit Lamp with External Driver LED 4' T8 Lamp (2) 12W Lamps	1		2730	0.11	0.05	388	173
639	EDUCATION BUILDING	T11 OFFICE	2	53	2'x4' Troffer Recessed Fluorescent, (2) 48", T-8 lamp, Instant Start Ballast, NLO (BF: .85-.95) Prismatic Acrylic Diffuser	2	24	Recessed T8 LED Retrofit Lamp with External Driver LED 4' T8 Lamp (2) 12W Lamps	1		2730	0.11	0.05	388	173
640	EDUCATION BUILDING	T16 OFFICE	2	53	2'x4' Troffer Recessed Fluorescent, (2) 48", T-8 lamp, Instant Start Ballast, NLO (BF: .85-.95) Prismatic Acrylic Diffuser	2	24	Recessed T8 LED Retrofit Lamp with External Driver LED 4' T8 Lamp (2) 12W Lamps	1		2730	0.11	0.05	388	173
641	EDUCATION BUILDING	T15 OFFICE	2	53	2'x4' Troffer Recessed Fluorescent, (2) 48", T-8 lamp, Instant Start Ballast, NLO (BF: .85-.95) Prismatic Acrylic Diffuser	2	24	Recessed T8 LED Retrofit Lamp with External Driver LED 4' T8 Lamp (2) 12W Lamps	1		2730	0.11	0.05	388	173
642	EDUCATION BUILDING	T12 OFFICE	2	53	2'x4' Troffer Recessed Fluorescent, (2) 48", T-8 lamp, Instant Start Ballast, NLO (BF: .85-.95) Prismatic Acrylic Diffuser	2	24	Recessed T8 LED Retrofit Lamp with External Driver LED 4' T8 Lamp (2) 12W Lamps	1		2730	0.11	0.05	388	173
643	EDUCATION BUILDING	T13 OFFICE	2	53	2'x4' Troffer Recessed Fluorescent, (2) 48", T-8 lamp, Instant Start Ballast, NLO (BF: .85-.95) Prismatic Acrylic Diffuser	2	24	Recessed T8 LED Retrofit Lamp with External Driver LED 4' T8 Lamp (2) 12W Lamps	1		2730	0.11	0.05	388	173
644	EDUCATION BUILDING	T14 OFFICE	2	53	2'x4' Troffer Recessed Fluorescent, (2) 48", T-8 lamp, Instant Start Ballast, NLO (BF: .85-.95) Prismatic Acrylic Diffuser	2	24	Recessed T8 LED Retrofit Lamp with External Driver LED 4' T8 Lamp (2) 12W Lamps	1		2730	0.11	0.05	388	173
645	EDUCATION BUILDING	T24 OFFICE	2	53	2'x4' Troffer Recessed Fluorescent, (2) 48", T-8 lamp, Instant Start Ballast, NLO (BF: .85-.95) Prismatic Acrylic Diffuser	2	24	Recessed T8 LED Retrofit Lamp with External Driver LED 4' T8 Lamp (2) 12W Lamps	1		2730	0.11	0.05	388	173
646	EDUCATION BUILDING	T25 OFFICE	2	53	2'x4' Troffer Recessed Fluorescent, (2) 48", T-8 lamp, Instant Start Ballast, NLO (BF: .85-.95) Prismatic Acrylic Diffuser	2	24	Recessed T8 LED Retrofit Lamp with External Driver LED 4' T8 Lamp (2) 12W Lamps	1		2730	0.11	0.05	388	173
647	EDUCATION BUILDING	T26 OFFICE	2	53	2'x4' Troffer Recessed Fluorescent, (2) 48", T-8 lamp, Instant Start Ballast, NLO (BF: .85-.95) Prismatic Acrylic Diffuser	2	24	Recessed T8 LED Retrofit Lamp with External Driver LED 4' T8 Lamp (2) 12W Lamps	1		2730	0.11	0.05	388	173
648	EDUCATION BUILDING	T19 OPEN OFFICE	12	80	2'x4' Troffer Recessed Fluorescent, (3) 48", T-8 lamp, Instant Start Ballast, NLO (BF: .85-.95) Prismatic Acrylic Diffuser	12	36	Recessed T8 LED Retrofit Lamp with External Driver LED 4' T8 Lamp (3) 12W Lamps		1	6570	0.96	0.43	8,444	3,746
649	EDUCATION BUILDING	T23 COPY ROOM	4	53	2'x4' Troffer Recessed Fluorescent, (2) 48", T-8 lamp, Instant Start Ballast, NLO (BF: .85-.95) Prismatic Acrylic Diffuser	4	24	Recessed T8 LED Retrofit Lamp with External Driver LED 4' T8 Lamp (2) 12W Lamps			3640	0.21	0.10	775	346
650	EDUCATION BUILDING	T22 OFFICE	2	53	2'x4' Troffer Recessed Fluorescent, (2) 48", T-8 lamp, Instant Start Ballast, NLO (BF: .85-.95) Prismatic Acrylic Diffuser	2	24	Recessed T8 LED Retrofit Lamp with External Driver LED 4' T8 Lamp (2) 12W Lamps	1		2730	0.11	0.05	388	173
651	EDUCATION BUILDING	T21 OFFICE	2	53	2'x4' Troffer Recessed Fluorescent, (2) 48", T-8 lamp, Instant Start Ballast, NLO (BF: .85-.95) Prismatic Acrylic Diffuser	2	24	Recessed T8 LED Retrofit Lamp with External Driver LED 4' T8 Lamp (2) 12W Lamps	1		2730	0.11	0.05	388	173
652	EDUCATION BUILDING	T20 OFFICE	2	53	2'x4' Troffer Recessed Fluorescent, (2) 48", T-8 lamp, Instant Start Ballast, NLO (BF: .85-.95) Prismatic Acrylic Diffuser	2	24	Recessed T8 LED Retrofit Lamp with External Driver LED 4' T8 Lamp (2) 12W Lamps	1		2730	0.11	0.05	388	173
653	EDUCATION BUILDING	E01 CLASSROOM	10	80	2'x4' Troffer Recessed Fluorescent, (3) 48", T-8 lamp, Instant Start Ballast, NLO (BF: .85-.95) Prismatic Acrylic Diffuser	10	36	Recessed T8 LED Retrofit Lamp with External Driver LED 4' T8 Lamp (3) 12W Lamps		1	1950	0.80	0.36	2,088	927
654	EDUCATION BUILDING	E19 OFFICE	2	80	2'x4' Troffer Recessed Fluorescent, (3) 48", T-8 lamp, Instant Start Ballast, NLO (BF: .85-.95) Prismatic Acrylic Diffuser	2	36	Recessed T8 LED Retrofit Lamp with External Driver LED 4' T8 Lamp (3) 12W Lamps	1		2730	0.16	0.07	585	259
655	EDUCATION BUILDING	E20 OFFICE	2	80	2'x4' Troffer Recessed Fluorescent, (3) 48", T-8 lamp, Instant Start Ballast, NLO (BF: .85-.95) Prismatic Acrylic Diffuser	2	36	Recessed T8 LED Retrofit Lamp with External Driver LED 4' T8 Lamp (3) 12W Lamps	1		2730	0.16	0.07	585	259
656	EDUCATION BUILDING	STAFF MENS RESTROOM	1	53	4' Wraparound Surface Mounted Fluorescent, (2) 48", T-8 lamp, Instant Start Ballast, NLO (BF: .85-.95) Prismatic Acrylic Diffuser	1	24	Surface Mounted T8 LED Retrofit Lamp with External Driver LED 4' T8 Lamp (2) 12W Lamps	1		1092	0.05	0.02	78	35
657	EDUCATION BUILDING	STAFF WOMENS RESTROOM	1	53	4' Wraparound Surface Mounted Fluorescent, (2) 48", T-8 lamp, Instant Start Ballast, NLO (BF: .85-.95) Prismatic Acrylic Diffuser	1	24	Surface Mounted T8 LED Retrofit Lamp with External Driver LED 4' T8 Lamp (2) 12W Lamps	1		1092	0.05	0.02	78	35
658	EDUCATION BUILDING	E18 OFFICE	2	53	2'x4' Troffer Recessed Fluorescent, (2) 48", T-8 lamp, Instant Start Ballast, NLO (BF: .85-.95) Prismatic Acrylic Diffuser	2	24	Recessed T8 LED Retrofit Lamp with External Driver LED 4' T8 Lamp (2) 12W Lamps	1		2730	0.11	0.05	388	173
659	EDUCATION BUILDING	E17 OFFICE	2	53	2'x4' Troffer Recessed Fluorescent, (2) 48", T-8 lamp, Instant Start Ballast, NLO (BF: .85-.95) Prismatic Acrylic Diffuser	2	24	Recessed T8 LED Retrofit Lamp with External Driver LED 4' T8 Lamp (2) 12W Lamps	1		2730	0.11	0.05	388	173

Line #	Facility Area	Space	Pre Fixture Qty	Pre Watts/ Fixt	Pre Description	Post Fixture Qty	Post Watt/ Fixt	Post Description	Wallswitch Sensor	Ceiling Sensor	Hours of Operation	Base kW	Proposed kW	Base kWh	Proposed kWh
660	EDUCATION BUILDING	E02 CLASSROOM	10	80	2'x4' Troffer Recessed Fluorescent, (3) 48", T-8 lamp, Instant Start Ballast, NLO (BF: .85-.95) Prismatic Acrylic Diffuser	10	36	Recessed T8 LED Retrofit Lamp with External Driver LED 4' T8 Lamp (3) 12W Lamps		1	1950	0.80	0.36	2,088	927
661	EDUCATION BUILDING	E03 CLASSROOM	10	80	2'x4' Troffer Recessed Fluorescent, (3) 48", T-8 lamp, Instant Start Ballast, NLO (BF: .85-.95) Prismatic Acrylic Diffuser	10	36	Recessed T8 LED Retrofit Lamp with External Driver LED 4' T8 Lamp (3) 12W Lamps		1	1950	0.80	0.36	2,088	927
662	EDUCATION BUILDING	E16 OFFICE	2	80	2'x4' Troffer Recessed Fluorescent, (3) 48", T-8 lamp, Instant Start Ballast, NLO (BF: .85-.95) Prismatic Acrylic Diffuser	2	36	Recessed T8 LED Retrofit Lamp with External Driver LED 4' T8 Lamp (3) 12W Lamps	1		2730	0.16	0.07	585	259
663	EDUCATION BUILDING	E15 OFFICE	2	80	2'x4' Troffer Recessed Fluorescent, (3) 48", T-8 lamp, Instant Start Ballast, NLO (BF: .85-.95) Prismatic Acrylic Diffuser	2	36	Recessed T8 LED Retrofit Lamp with External Driver LED 4' T8 Lamp (3) 12W Lamps	1		2730	0.16	0.07	585	259
664	EDUCATION BUILDING	E18/14 CLASSROOM	7	156	8' Vapor Proof Chain Mounted Fluorescent, (2) 96", STD lamp Vapor Proof Gasketed Diffuser	7	64	Chain Mounted 8' Vapor Proof LED Light Fixture. (1) 65W			2600	1.09	0.45	2,842	1,171
665	EDUCATION BUILDING	E04/05 CLASSROOM	20	80	2'x4' Troffer Recessed Fluorescent, (3) 48", T-8 lamp, Instant Start Ballast, NLO (BF: .85-.95) Prismatic Acrylic Diffuser	20	36	Recessed T8 LED Retrofit Lamp with External Driver LED 4' T8 Lamp (3) 12W Lamps		1	1950	1.61	0.71	4,177	1,853
666	EDUCATION BUILDING	E13 CLASSROOM	4	156	8' Vapor Proof Chain Mounted Fluorescent, (2) 96", STD lamp Vapor Proof Gasketed Diffuser	4	64	Chain Mounted 8' Vapor Proof LED Light Fixture. (1) 65W			2600	0.62	0.26	1,624	669
667	EDUCATION BUILDING	E06 CLASSROOM	10	80	2'x4' Troffer Recessed Fluorescent, (3) 48", T-8 lamp, Instant Start Ballast, NLO (BF: .85-.95) Prismatic Acrylic Diffuser	10	36	Recessed T8 LED Retrofit Lamp with External Driver LED 4' T8 Lamp (3) 12W Lamps		1	1950	0.80	0.36	2,088	927
668	EDUCATION BUILDING	E07 CLASSROOM	10	80	2'x4' Troffer Recessed Fluorescent, (3) 48", T-8 lamp, Instant Start Ballast, NLO (BF: .85-.95) Prismatic Acrylic Diffuser	10	36	Recessed T8 LED Retrofit Lamp with External Driver LED 4' T8 Lamp (3) 12W Lamps		1	1950	0.80	0.36	2,088	927
669	EDUCATION BUILDING	E12 CLASSROOM	4	156	8' Vapor Proof Chain Mounted Fluorescent, (2) 96", STD lamp Vapor Proof Gasketed Diffuser	4	64	Chain Mounted 8' Vapor Proof LED Light Fixture. (1) 65W			2600	0.62	0.26	1,624	669
670	EDUCATION BUILDING	E08 CLASSROOM	10	80	2'x4' Troffer Recessed Fluorescent, (3) 48", T-8 lamp, Instant Start Ballast, NLO (BF: .85-.95) Prismatic Acrylic Diffuser	10	36	Recessed T8 LED Retrofit Lamp with External Driver LED 4' T8 Lamp (3) 12W Lamps		1	1950	0.80	0.36	2,088	927
671	EDUCATION BUILDING	E11 CLASSROOM	6	156	8' Vapor Proof Chain Mounted Fluorescent, (2) 96", STD lamp Vapor Proof Gasketed Diffuser	6	64	Chain Mounted 8' Vapor Proof LED Light Fixture. (1) 65W			2600	0.94	0.39	2,436	1,004
672	EDUCATION BUILDING	E11 CLASSROOM	1	101	2'x4' Troffer Recessed Fluorescent, (4) 48", T-8 lamp, Instant Start Ballast, NLO (BF: .85-.95) Prismatic Acrylic Diffuser	1	48	Recessed T8 LED Retrofit Lamp with External Driver LED 4' T8 Lamp (4) 12W Lamps			2600	0.10	0.05	263	124
673	EDUCATION BUILDING	E09 CLASSROOM	12	80	2'x4' Troffer Recessed Fluorescent, (3) 48", T-8 lamp, Instant Start Ballast, NLO (BF: .85-.95) Prismatic Acrylic Diffuser	12	36	Recessed T8 LED Retrofit Lamp with External Driver LED 4' T8 Lamp (3) 12W Lamps		1	1950	0.96	0.43	2,506	1,112
674	EDUCATION BUILDING	E32 STAFF CONFERENCE ROOM	6	80	2'x4' Troffer Recessed Fluorescent, (3) 48", T-8 lamp, Instant Start Ballast, NLO (BF: .85-.95) Prismatic Acrylic Diffuser	6	36	Recessed T8 LED Retrofit Lamp with External Driver LED 4' T8 Lamp (3) 12W Lamps			1560	0.48	0.21	752	334
675	EDUCATION BUILDING	E21 LIBRARY	22	80	2'x4' Troffer Recessed Fluorescent, (3) 48", T-8 lamp, Instant Start Ballast, NLO (BF: .85-.95) Prismatic Acrylic Diffuser	22	36	Recessed T8 LED Retrofit Lamp with External Driver LED 4' T8 Lamp (3) 12W Lamps			8760	1.77	0.78	15,480	6,869
676	EDUCATION BUILDING	8.504 LIBRARY OFFICE	2	80	2'x4' Troffer Recessed Fluorescent, (3) 48", T-8 lamp, Instant Start Ballast, NLO (BF: .85-.95) Prismatic Acrylic Diffuser	2	36	Recessed T8 LED Retrofit Lamp with External Driver LED 4' T8 Lamp (3) 12W Lamps	1		2730	0.16	0.07	585	259
677	EDUCATION BUILDING	8.505 LIBRARY OFFICE	2	80	2'x4' Troffer Recessed Fluorescent, (3) 48", T-8 lamp, Instant Start Ballast, NLO (BF: .85-.95) Prismatic Acrylic Diffuser	2	36	Recessed T8 LED Retrofit Lamp with External Driver LED 4' T8 Lamp (3) 12W Lamps	1		2730	0.16	0.07	585	259
678	EDUCATION BUILDING	8.503 OFFICE	3	80	2'x4' Troffer Recessed Fluorescent, (3) 48", T-8 lamp, Instant Start Ballast, NLO (BF: .85-.95) Prismatic Acrylic Diffuser	3	36	Recessed T8 LED Retrofit Lamp with External Driver LED 4' T8 Lamp (3) 12W Lamps	1		2730	0.24	0.11	877	389
679	EDUCATION BUILDING	8.506 STORAGE ROOM	2	53	2'x4' Troffer Recessed Fluorescent, (2) 48", T-8 lamp, Instant Start Ballast, NLO (BF: .85-.95) Prismatic Acrylic Diffuser	2	24	Recessed T8 LED Retrofit Lamp with External Driver LED 4' T8 Lamp (2) 12W Lamps			520	0.11	0.05	55	25
680	EDUCATION BUILDING	E22 COMPUTER ROOM	3	80	2'x4' Troffer Recessed Fluorescent, (3) 48", T-8 lamp, Instant Start Ballast, NLO (BF: .85-.95) Prismatic Acrylic Diffuser	3	36	Recessed T8 LED Retrofit Lamp with External Driver LED 4' T8 Lamp (3) 12W Lamps			2600	0.24	0.11	627	278
681	EDUCATION BUILDING	E31 SHOP CLASSROOM	6	156	8' Vapor Proof Chain Mounted Fluorescent, (2) 96", STD lamp Vapor Proof Gasketed Diffuser	6	64	Chain Mounted 8' Vapor Proof LED Light Fixture. (1) 65W			2600	0.94	0.39	2,436	1,004
682	EDUCATION BUILDING	E31 SHOP CLASSROOM	4	53	4' Industrial Surface Mounted Fluorescent, (2) 48", T-8 lamp, Instant Start Ballast, NLO (BF: .85-.95) (No Diffuser)	4	24	Surface Mounted T8 LED Retrofit Lamp with External Driver LED 4' T8 Lamp (2) 12W Lamps			2600	0.21	0.10	554	247
683	EDUCATION BUILDING	E31 SHOP CLASSROOM	3	266	2'x2' Troffer Recessed Metal Halide, (1) 250W lamp Prismatic Acrylic Diffuser	3	49	Recessed Chip On Board (COB) Type Screw-in / Bypass Existing Ballast Light Emitting Diode Lamp, Screw-in, (1) 54W lamp			2600	0.80	0.15	2,077	379
684	EDUCATION BUILDING	E23 CLASSROOM	10	80	2'x4' Troffer Recessed Fluorescent, (3) 48", T-8 lamp, Instant Start Ballast, NLO (BF: .85-.95) Prismatic Acrylic Diffuser	10	36	Recessed T8 LED Retrofit Lamp with External Driver LED 4' T8 Lamp (3) 12W Lamps		1	1950	0.80	0.36	2,088	927
685	EDUCATION BUILDING	E24 CLASSROOM	10	80	2'x4' Troffer Recessed Fluorescent, (3) 48", T-8 lamp, Instant Start Ballast, NLO (BF: .85-.95) Prismatic Acrylic Diffuser	10	36	Recessed T8 LED Retrofit Lamp with External Driver LED 4' T8 Lamp (3) 12W Lamps		1	1950	0.80	0.36	2,088	927
686	EDUCATION BUILDING	E31 CLASSROOM	4	156	8' Vapor Proof Chain Mounted Fluorescent, (2) 96", STD lamp Vapor Proof Gasketed Diffuser	4	64	Chain Mounted 8' Vapor Proof LED Light Fixture. (1) 65W			2600	0.62	0.26	1,624	669
687	EDUCATION BUILDING	E25 CLASSROOM	10	80	2'x4' Troffer Recessed Fluorescent, (3) 48", T-8 lamp, Instant Start Ballast, NLO (BF: .85-.95) Prismatic Acrylic Diffuser	10	36	Recessed T8 LED Retrofit Lamp with External Driver LED 4' T8 Lamp (3) 12W Lamps		1	1950	0.80	0.36	2,088	927
688	EDUCATION BUILDING	E30 CLASSROOM	10	156	8' Vapor Proof Chain Mounted Fluorescent, (2) 96", STD lamp Vapor Proof Gasketed Diffuser	10	64	Chain Mounted 8' Vapor Proof LED Light Fixture. (1) 65W			2600	1.56	0.64	4,059	1,673
689	EDUCATION BUILDING	E26 CLASSROOM	10	80	2'x4' Troffer Recessed Fluorescent, (3) 48", T-8 lamp, Instant Start Ballast, NLO (BF: .85-.95) Prismatic Acrylic Diffuser	10	36	Recessed T8 LED Retrofit Lamp with External Driver LED 4' T8 Lamp (3) 12W Lamps		1	1950	0.80	0.36	2,088	927

Line #	Facility Area	Space	Pre Fixture Qty	Pre Watts/ Fixt	Pre Description	Post Fixture Qty	Post Watt/ Fixt	Post Description	Wallswitch Sensor	Ceiling Sensor	Hours of Operation	Base kW	Proposed kW	Base kWh	Proposed kWh
690	EDUCATION BUILDING	E27/28 ELECTRICAL CLASSROOM	22	80	2'x4' Troffer Recessed Fluorescent, (3) 48", T-8 lamp, Instant Start Ballast, NLO (BF: .85-.95) Prismatic Acrylic Diffuser	22	36	Recessed T8 LED Retrofit Lamp with External Driver LED 4' T8 Lamp (3) 12W Lamps		1	1950	1.77	0.78	4,594	2,039
691	EDUCATION BUILDING	E30 CLASSROOM	7	156	8' Vapor Proof Chain Mounted Fluorescent, (2) 96", STD lamp Vapor Proof Gasketed Diffuser	7	64	Chain Mounted 8' Vapor Proof LED Light Fixture. (1) 65W			2600	1.09	0.45	2,842	1,171
692	EDUCATION BUILDING	E30 CLASSROOM	1	53	4' Wraparound; Tamper-proof Surface Mounted Fluorescent, (2) 48", T-8 lamp, Instant Start Ballast, NLO (BF: .85-.95) Prismatic Acrylic Diffuser	1	24	Surface Mounted T8 LED Retrofit Lamp with External Driver LED 4' T8 Lamp (2) 12W Lamps			2600	0.05	0.02	138	62
693	EDUCATION BUILDING	MUSIC ROOM OFFICE	2	80	2'x4' Troffer Recessed Fluorescent, (3) 48", T-8 lamp, Instant Start Ballast, NLO (BF: .85-.95) Prismatic Acrylic Diffuser	2	36	Recessed T8 LED Retrofit Lamp with External Driver LED 4' T8 Lamp (3) 12W Lamps	1		2730	0.16	0.07	585	259
694	EDUCATION BUILDING	CLASSROOM	9	80	2'x4' Troffer Recessed Flanged Fluorescent, (3) 48", T-8 lamp, Instant Start Ballast, NLO (BF: .85-.95) Prismatic Acrylic Diffuser	9	36	Recessed Flanged T8 LED Retrofit Lamp with External Driver LED 4' T8 Lamp (3) 12W Lamps			2600	0.72	0.32	1,880	834
695	EDUCATION BUILDING	9.702 OFFICE	4	80	2'x4' Troffer Recessed Flanged Fluorescent, (3) 48", T-8 lamp, Instant Start Ballast, NLO (BF: .85-.95) Prismatic Acrylic Diffuser	4	36	Recessed Flanged T8 LED Retrofit Lamp with External Driver LED 4' T8 Lamp (3) 12W Lamps	1		2730	0.32	0.14	1,169	519
696	EDUCATION BUILDING	3.11 ICE CREAM STORAGE	6	80	2'x4' Troffer Recessed Fluorescent, (3) 48", T-8 lamp, Instant Start Ballast, NLO (BF: .85-.95) Prismatic Acrylic Diffuser	6	36	Recessed T8 LED Retrofit Lamp with External Driver LED 4' T8 Lamp (3) 12W Lamps			520	0.48	0.21	251	111
697	EDUCATION BUILDING	3.102 WEIGHT ROOM	16	80	2'x4' Troffer Recessed Fluorescent, (3) 48", T-8 lamp, Instant Start Ballast, NLO (BF: .85-.95) Prismatic Acrylic Diffuser	16	36	Recessed T8 LED Retrofit Lamp with External Driver LED 4' T8 Lamp (3) 12W Lamps			5824	1.29	0.57	7,485	3,321
698	EDUCATION BUILDING	6.308 JFC OFFICE	6	80	2'x4' Troffer Recessed Fluorescent, (3) 48", T-8 lamp, Instant Start Ballast, NLO (BF: .85-.95) Prismatic Acrylic Diffuser	6	36	Recessed T8 LED Retrofit Lamp with External Driver LED 4' T8 Lamp (3) 12W Lamps		1	2730	0.48	0.21	1,754	778
699	EDUCATION BUILDING	6.312 MUSIC OFFICE ENTRY	1	53	2'x4' Troffer Recessed Fluorescent, (2) 48", T-8 lamp, Instant Start Ballast, NLO (BF: .85-.95) Prismatic Acrylic Diffuser	1	24	Recessed T8 LED Retrofit Lamp with External Driver LED 4' T8 Lamp (2) 12W Lamps	1		2730	0.05	0.02	194	86
700	EDUCATION BUILDING	MUSIC ROOM 2	6	80	2'x4' Troffer Recessed Fluorescent, (3) 48", T-8 lamp, Instant Start Ballast, NLO (BF: .85-.95) Prismatic Acrylic Diffuser	6	36	Recessed T8 LED Retrofit Lamp with External Driver LED 4' T8 Lamp (3) 12W Lamps			3640	0.48	0.21	1,754	778
701	EDUCATION BUILDING	MUSIC ROOM 1	6	80	2'x4' Troffer Recessed Fluorescent, (3) 48", T-8 lamp, Instant Start Ballast, NLO (BF: .85-.95) Prismatic Acrylic Diffuser	6	36	Recessed T8 LED Retrofit Lamp with External Driver LED 4' T8 Lamp (3) 12W Lamps			3640	0.48	0.21	1,754	778
702	EDUCATION BUILDING	MUSIC OFFICE	2	80	2'x4' Troffer Recessed Fluorescent, (3) 48", T-8 lamp, Instant Start Ballast, NLO (BF: .85-.95) Prismatic Acrylic Diffuser	2	36	Recessed T8 LED Retrofit Lamp with External Driver LED 4' T8 Lamp (3) 12W Lamps	1		2730	0.16	0.07	585	259
703	EDUCATION BUILDING	6.304 STAFF RESTROOM	1	53	4' Wraparound Surface Mounted Fluorescent, (2) 48", T-8 lamp, Instant Start Ballast, NLO (BF: .85-.95) Prismatic Acrylic Diffuser	1	24	Surface Mounted T8 LED Retrofit Lamp with External Driver LED 4' T8 Lamp (2) 12W Lamps	1		1092	0.05	0.02	78	35
704	EDUCATION BUILDING	6.310 INMATE RESTROOM	1	53	4' Wraparound Surface Mounted Fluorescent, (2) 48", T-8 lamp, Instant Start Ballast, NLO (BF: .85-.95) Prismatic Acrylic Diffuser	1	24	Surface Mounted T8 LED Retrofit Lamp with External Driver LED 4' T8 Lamp (2) 12W Lamps	1		1092	0.05	0.02	78	35
705	EDUCATION BUILDING	CUSTODIAL CLOSET	1	53	4' Wraparound Surface Mounted Fluorescent, (2) 48", T-8 lamp, Instant Start Ballast, NLO (BF: .85-.95) Prismatic Acrylic Diffuser	1	24	Surface Mounted T8 LED Retrofit Lamp with External Driver LED 4' T8 Lamp (2) 12W Lamps			1456	0.05	0.02	78	35
706	EDUCATION BUILDING	3.101 GYM	2	80	2'x4' Troffer Recessed Fluorescent, (3) 48", T-8 lamp, Instant Start Ballast, NLO (BF: .85-.95) Prismatic Acrylic Diffuser	2	36	Recessed T8 LED Retrofit Lamp with External Driver LED 4' T8 Lamp (3) 12W Lamps			5824	0.16	0.07	936	415
707	EDUCATION BUILDING	3.101 GYM	28	266	High-Bay Hook/Cord/Plug Metal Halide, (1) 250W lamp Prismatic Acrylic Diffuser	28	77	Hook/Cord/Plug High-Bay LED Light Fixture. (1) 78W - HIGH			5824	7.45	2.16	43,416	12,592
708	EDUCATION BUILDING	10.950 RESTROOM	2	53	4' Wraparound; Tamper-proof Surface Mounted Fluorescent, (2) 48", T-8 lamp, Instant Start Ballast, NLO (BF: .85-.95) Prismatic Acrylic Diffuser	2	24	Surface Mounted T8 LED Retrofit Lamp with External Driver LED 4' T8 Lamp (2) 12W Lamps	1		1092	0.11	0.05	155	69
709	EDUCATION BUILDING	10.950 RESTROOM	1	30	2' Wraparound; Tamper-proof Surface Mounted Fluorescent, (2) 24", T-8 lamp, Instant Start Ballast, NLO (BF: .85-.95) Prismatic Acrylic Diffuser	1	16	Surface Mounted T8 LED Retrofit Lamp with External Driver LED 2' T8 Lamp (2) 8W Lamps	1		1092	0.03	0.02	43	23
710	EDUCATION BUILDING	LAUNDRY ROOM	1	53	4' Wraparound; Tamper-proof Surface Mounted Fluorescent, (2) 48", T-8 lamp, Instant Start Ballast, NLO (BF: .85-.95) Prismatic Acrylic Diffuser	1	24	Surface Mounted T8 LED Retrofit Lamp with External Driver LED 4' T8 Lamp (2) 12W Lamps			8760	0.05	0.02	466	208
711	EDUCATION BUILDING	10.907 CUSTODIAL SUPPLY	4	53	4' Wraparound; Tamper-proof Surface Mounted Fluorescent, (2) 48", T-8 lamp, Instant Start Ballast, NLO (BF: .85-.95) Prismatic Acrylic Diffuser	4	24	Surface Mounted T8 LED Retrofit Lamp with External Driver LED 4' T8 Lamp (2) 12W Lamps			1456	0.21	0.10	310	138
712	EDUCATION BUILDING	10.907 CUSTODIAL SUPPLY	2	30	2' Wraparound; Tamper-proof Surface Mounted Fluorescent, (2) 24", T-8 lamp, Instant Start Ballast, NLO (BF: .85-.95) Prismatic Acrylic Diffuser	2	16	Surface Mounted T8 LED Retrofit Lamp with External Driver LED 2' T8 Lamp (2) 8W Lamps			1456	0.06	0.03	87	46
713	EDUCATION BUILDING	10.908 RESTROOM	1	53	4' Wraparound; Tamper-proof Surface Mounted Fluorescent, (2) 48", T-8 lamp, Instant Start Ballast, NLO (BF: .85-.95) Prismatic Acrylic Diffuser	1	24	Surface Mounted T8 LED Retrofit Lamp with External Driver LED 4' T8 Lamp (2) 12W Lamps	1		1092	0.05	0.02	78	35
714	EDUCATION BUILDING	STORAGE ROOM / LAUNDRY	1	53	4' Wraparound; Tamper-proof Surface Mounted Fluorescent, (2) 48", T-8 lamp, Instant Start Ballast, NLO (BF: .85-.95) Prismatic Acrylic Diffuser	1	24	Surface Mounted T8 LED Retrofit Lamp with External Driver LED 4' T8 Lamp (2) 12W Lamps			520	0.05	0.02	28	12
715	EDUCATION BUILDING	STORAGE ROOM	1	53	4' Wraparound; Tamper-proof Surface Mounted Fluorescent, (2) 48", T-8 lamp, Instant Start Ballast, NLO (BF: .85-.95) Prismatic Acrylic Diffuser	1	24	Surface Mounted T8 LED Retrofit Lamp with External Driver LED 4' T8 Lamp (2) 12W Lamps			520	0.05	0.02	28	12
716	EDUCATION BUILDING	3.107 OFFICE	4	80	2'x4' Troffer Recessed Fluorescent, (3) 48", T-8 lamp, Instant Start Ballast, NLO (BF: .85-.95) Prismatic Acrylic Diffuser	4	36	Recessed T8 LED Retrofit Lamp with External Driver LED 4' T8 Lamp (3) 12W Lamps	1		2730	0.32	0.14	1,169	519
717	EDUCATION BUILDING	3.104 WEIGHT ROOM	16	80	2'x4' Troffer Recessed Flanged Fluorescent, (3) 48", T-8 lamp, Instant Start Ballast, NLO (BF: .85-.95) Prismatic Acrylic Diffuser	16	36	Recessed Flanged T8 LED Retrofit Lamp with External Driver LED 4' T8 Lamp (3) 12W Lamps			5824	1.29	0.57	7,485	3,321
718	EDUCATION BUILDING	BARBER SHOP	16	80	2'x4' Troffer Recessed Flanged Fluorescent, (3) 48", T-8 lamp, Instant Start Ballast, NLO (BF: .85-.95) Prismatic Acrylic Diffuser	16	36	Recessed Flanged T8 LED Retrofit Lamp with External Driver LED 4' T8 Lamp (3) 12W Lamps			3640	1.29	0.57	4,678	2,076
719	EDUCATION BUILDING	BARBER SHOP	13	53	4' Vapor Proof Surface Mounted Fluorescent, (2) 48", T-8 lamp, Instant Start Ballast, NLO (BF: .85-.95) Vapor Proof Gasketed Diffuser	13	24	Surface Mounted T8 LED Retrofit Lamp with External Driver LED 4' T8 Lamp (2) 12W Lamps			3640	0.69	0.31	2,520	1,124

Line #	Facility Area	Space	Pre Fixture Qty	Pre Watts/ Fixt	Pre Description	Post Fixture Qty	Post Watt/ Fixt	Post Description	Wallswitch Sensor	Ceiling Sensor	Hours of Operation	Base kW	Proposed kW	Base kWh	Proposed kWh
720	EDUCATION BUILDING	BARBER SHOP OFFICE	2	53	2'x4' Troffer Recessed Flanged Fluorescent, (2) 48", T-8 lamp, Instant Start Ballast, NLO (BF: .85-.95) Prismatic Acrylic Diffuser	2	24	Recessed Flanged T8 LED Retrofit Lamp with External Driver LED 4' T8 Lamp (2) 12W Lamps	1		2730	0.11	0.05	388	173
721	EDUCATION BUILDING	BARBER SHOP OFFICE	1	80	2'x4' Troffer Recessed Flanged Fluorescent, (3) 48", T-8 lamp, Instant Start Ballast, NLO (BF: .85-.95) Prismatic Acrylic Diffuser	1	36	Recessed Flanged T8 LED Retrofit Lamp with External Driver LED 4' T8 Lamp (3) 12W Lamps	1		2730	0.08	0.04	292	130
722	EDUCATION BUILDING	9.810 CUSTODIAL CLOSET	2	53	4' Wraparound; Tamper-proof Surface Mounted Fluorescent, (2) 48", T-8 lamp, Instant Start Ballast, NLO (BF: .85-.95) Prismatic Acrylic Diffuser	2	24	Surface Mounted T8 LED Retrofit Lamp with External Driver LED 4' T8 Lamp (2) 12W Lamps			1456	0.11	0.05	155	69
723	EDUCATION BUILDING	9.807 BARBER SHOP RESTROOM	1	53	4' Wraparound; Tamper-proof Surface Mounted Fluorescent, (2) 48", T-8 lamp, Instant Start Ballast, NLO (BF: .85-.95) Prismatic Acrylic Diffuser	1	24	Surface Mounted T8 LED Retrofit Lamp with External Driver LED 4' T8 Lamp (2) 12W Lamps	1		1092	0.05	0.02	78	35
724	EDUCATION BUILDING	PENTHOUSE MECHANICAL ROOM	1	53	4' Strip Surface Mounted Fluorescent, (2) 48", T-8 lamp, Instant Start Ballast, NLO (BF: .85-.95) (No Diffuser)	1	24	Surface Mounted T8 LED Retrofit Lamp with External Driver LED 4' T8 Lamp (2) 12W Lamps			520	0.05	0.02	28	12
725	EDUCATION BUILDING	PENTHOUSE MECHANICAL ROOM	34	53	4' Industrial Surface Mounted Fluorescent, (2) 48", T-8 lamp, Instant Start Ballast, NLO (BF: .85-.95) (No Diffuser)	34	24	Surface Mounted T8 LED Retrofit Lamp with External Driver LED 4' T8 Lamp (2) 12W Lamps			520	1.81	0.81	941	420
726	EDUCATION BUILDING	ELECTRICIANS SHOP	24	53	4' Industrial Surface Mounted Fluorescent, (2) 48", T-8 lamp, Instant Start Ballast, NLO (BF: .85-.95) (No Diffuser)	24	24	Surface Mounted T8 LED Retrofit Lamp with External Driver LED 4' T8 Lamp (2) 12W Lamps			520	1.28	0.57	665	297
727	EDUCATION BUILDING	PENTHOUSE MECHANICAL ROOM	68	53	4' Industrial Surface Mounted Fluorescent, (2) 48", T-8 lamp, Instant Start Ballast, NLO (BF: .85-.95) (No Diffuser)	68	24	Surface Mounted T8 LED Retrofit Lamp with External Driver LED 4' T8 Lamp (2) 12W Lamps			520	3.62	1.62	1,883	840
728	MAIN BUILDING	CORRECTIONAL INDUSTRIES ENTRY	4	80	2'x4' Troffer Recessed Fluorescent, (3) 48", T-8 lamp, Instant Start Ballast, NLO (BF: .85-.95) Prismatic Acrylic Diffuser	4	36	Recessed T8 LED Retrofit Lamp with External Driver LED 4' T8 Lamp (3) 12W Lamps			8760	0.32	0.14	2,815	1,249
729	MAIN BUILDING	C&I VESTIBULE	1	80	2'x4' Troffer Recessed Fluorescent, (3) 48", T-8 lamp, Instant Start Ballast, NLO (BF: .85-.95) Prismatic Acrylic Diffuser	1	36	Recessed T8 LED Retrofit Lamp with External Driver LED 4' T8 Lamp (3) 12W Lamps			8760	0.08	0.04	704	312
730	MAIN BUILDING	6.107 RESTROOM	1	53	4' Wraparound Surface Mounted Fluorescent, (2) 48", T-8 lamp, Instant Start Ballast, NLO (BF: .85-.95) Prismatic Acrylic Diffuser	1	24	Surface Mounted T8 LED Retrofit Lamp with External Driver LED 4' T8 Lamp (2) 12W Lamps	1		1092	0.05	0.02	78	35
731	MAIN BUILDING	CORRIDOR	8	53	2'x4' Troffer Recessed Fluorescent, (2) 48", T-8 lamp, Instant Start Ballast, NLO (BF: .85-.95) Prismatic Acrylic Diffuser	8	24	Recessed T8 LED Retrofit Lamp with External Driver LED 4' T8 Lamp (2) 12W Lamps			8760	0.43	0.19	3,732	1,665
732	MAIN BUILDING	CORRIDOR	2	80	2'x4' Troffer Recessed Fluorescent, (3) 48", T-8 lamp, Instant Start Ballast, NLO (BF: .85-.95) Prismatic Acrylic Diffuser	2	36	Recessed T8 LED Retrofit Lamp with External Driver LED 4' T8 Lamp (3) 12W Lamps			8760	0.16	0.07	1,407	624
733	MAIN BUILDING	CORRIDOR	5	53	4' Industrial Chain Mounted Fluorescent, (2) 48", T-8 lamp, Instant Start Ballast, NLO (BF: .85-.95) (No Diffuser)	5	24	Chain Mounted T8 LED Retrofit Lamp with External Driver LED 4' T8 Lamp (2) 12W Lamps			8760	0.27	0.12	2,332	1,041
734	MAIN BUILDING	CORRIDOR	2	3	Universal Face Exit Sign Surface Mounted EXIT Light Emitting Diode, (1) 3W lamp, Single Sided (No Diffuser)	2	3	Existing luminaire to remain as is No Retrofit. To remain as is.			8760	0.01	0.01	49	49
735	MAIN BUILDING	STRIP SEARCH ROOM	5	53	4' Industrial Chain Mounted Fluorescent, (2) 48", T-8 lamp, Instant Start Ballast, NLO (BF: .85-.95) (No Diffuser)	5	24	Chain Mounted T8 LED Retrofit Lamp with External Driver LED 4' T8 Lamp (2) 12W Lamps			3640	0.27	0.12	969	432
736	MAIN BUILDING	6.108 JANITOR CLOSET	1	53	4' Wraparound Surface Mounted Fluorescent, (2) 48", T-8 lamp, Instant Start Ballast, NLO (BF: .85-.95) Prismatic Acrylic Diffuser	1	24	Surface Mounted T8 LED Retrofit Lamp with External Driver LED 4' T8 Lamp (2) 12W Lamps			1456	0.05	0.02	78	35
737	MAIN BUILDING	6.103 OFFICE	6	80	2'x4' Troffer Recessed Fluorescent, (3) 48", T-8 lamp, Instant Start Ballast, NLO (BF: .85-.95) Microcell Diffuser	6	36	Recessed T8 LED Retrofit Lamp with External Driver LED 4' T8 Lamp (3) 12W Lamps		1	2730	0.48	0.21	1,754	778
738	MAIN BUILDING	STORAGE ROOM	2	53	4' Industrial Chain Mounted Fluorescent, (2) 48", T-8 lamp, Instant Start Ballast, NLO (BF: .85-.95) (No Diffuser)	2	24	Chain Mounted T8 LED Retrofit Lamp with External Driver LED 4' T8 Lamp (2) 12W Lamps			520	0.11	0.05	55	25
739	MAIN BUILDING	6.113 SECURITY PANEL CLOSET	1	53	4' Wraparound Surface Mounted Fluorescent, (2) 48", T-8 lamp, Instant Start Ballast, NLO (BF: .85-.95) Prismatic Acrylic Diffuser	1	24	Surface Mounted T8 LED Retrofit Lamp with External Driver LED 4' T8 Lamp (2) 12W Lamps			520	0.05	0.02	28	12
740	MAIN BUILDING	C&I OVERFLOW WAREHOUSE	17	53	4' Industrial Chain Mounted Fluorescent, (2) 48", T-8 lamp, Instant Start Ballast, NLO (BF: .85-.95) (No Diffuser)	17	24	Chain Mounted T8 LED Retrofit Lamp with External Driver LED 4' T8 Lamp (2) 12W Lamps - HIGH			8760	0.91	0.40	7,930	3,538
741	MAIN BUILDING	C&I MAIN WAREHOUSE	152	53	4' Industrial Chain Mounted Fluorescent, (2) 48", T-8 lamp, Instant Start Ballast, NLO (BF: .85-.95) (No Diffuser)	152	24	Chain Mounted T8 LED Retrofit Lamp with External Driver LED 4' T8 Lamp (2) 12W Lamps - HIGH			8760	8.09	3.61	70,900	31,637
742	MAIN BUILDING	6.204 INMATE RESTROOM	3	53	4' Wraparound Surface Mounted Fluorescent, (2) 48", T-8 lamp, Instant Start Ballast, NLO (BF: .85-.95) Prismatic Acrylic Diffuser	3	24	Surface Mounted T8 LED Retrofit Lamp with External Driver LED 4' T8 Lamp (2) 12W Lamps			8760	0.16	0.07	1,399	624
743	MAIN BUILDING	6.205 OFFICE	2	80	2'x4' Troffer Recessed Fluorescent, (3) 48", T-8 lamp, Instant Start Ballast, NLO (BF: .85-.95) Prismatic Acrylic Diffuser	2	36	Recessed T8 LED Retrofit Lamp with External Driver LED 4' T8 Lamp (3) 12W Lamps	1		2730	0.16	0.07	585	259
744	MAIN BUILDING	& I BACK OVER FLOW STORAGE WAREHOUS	18	53	4' Industrial Chain Mounted Fluorescent, (2) 48", T-8 lamp, Instant Start Ballast, NLO (BF: .85-.95) (No Diffuser)	18	24	Chain Mounted T8 LED Retrofit Lamp with External Driver LED 4' T8 Lamp (2) 12W Lamps - HIGH			8760	0.96	0.43	8,396	3,746
745	MAIN BUILDING	RECEIVING DOCK	6	170	1'x1' Square Recessed High Pressure Sodium, (1) 150W lamp Prismatic Acrylic Diffuser	6	32	Recessed Chip On Board (COB) Type Screw-in / Bypass Existing Ballast Light Emitting Diode Lamp, Screw-in, (1) 36W lamp			8760	1.02	0.19	8,918	1,703
746	MAIN BUILDING	MAINTENANCE C&I SIDE	52	53	4' Industrial Chain Mounted Fluorescent, (2) 48", T-8 lamp, Instant Start Ballast, NLO (BF: .85-.95) (No Diffuser)	52	24	Chain Mounted T8 LED Retrofit Lamp with External Driver LED 4' T8 Lamp (2) 12W Lamps - HIGH			8760	2.77	1.24	24,255	10,823
747	MAIN BUILDING	MAINTENANCE C&I SIDE	2	101	4' Wraparound Chain Mounted Fluorescent, (4) 48", T-8 lamp, Instant Start Ballast, NLO (BF: .85-.95) Prismatic Acrylic Diffuser	2	48	Chain Mounted T8 LED Retrofit Lamp with External Driver LED 4' T8 Lamp (4) 12W Lamps			8760	0.20	0.10	1,771	833
748	MAIN BUILDING	MAINTENANCE C&I SIDE	2	19	Universal Face Exit Sign Surface Mounted EXIT Compact Fluorescent, (2) 7W lamp (No Diffuser)	2	9	Surface Mounted Upgrade EXIT Sign LED Light Fixture. (1) 9W			8760	0.04	0.02	332	156
749	MAIN BUILDING	JANITOR CLOSET	1	53	4' Wraparound Surface Mounted Fluorescent, (2) 48", T-8 lamp, Instant Start Ballast, NLO (BF: .85-.95) Prismatic Acrylic Diffuser	1	24	Surface Mounted T8 LED Retrofit Lamp with External Driver LED 4' T8 Lamp (2) 12W Lamps			1456	0.05	0.02	78	35

Line #	Facility Area	Space	Pre Fixture Qty	Pre Watts/ Fixt	Pre Description	Post Fixture Qty	Post Watt/ Fixt	Post Description	Wallswitch Sensor	Ceiling Sensor	Hours of Operation	Base kW	Proposed kW	Base kWh	Proposed kWh
750	MAIN BUILDING	OFFICE	2	80	2'x4' Troffer Recessed Fluorescent, (3) 48", T-8 lamp, Instant Start Ballast, NLO (BF: .85-.95) Prismatic Acrylic Diffuser	2	36	Recessed T8 LED Retrofit Lamp with External Driver LED 4' T8 Lamp (3) 12W Lamps	1		2730	0.16	0.07	585	259
751	MAIN BUILDING	STAFF RESTROOM	1	53	4' Wraparound Surface Mounted Fluorescent, (2) 48", T-8 lamp, Instant Start Ballast, NLO (BF: .85-.95) Prismatic Acrylic Diffuser	1	24	Surface Mounted T8 LED Retrofit Lamp with External Driver LED 4' T8 Lamp (2) 12W Lamps	1		1092	0.05	0.02	78	35
752	MAIN BUILDING	INMATE RESTROOM	1	53	4' Wraparound Surface Mounted Fluorescent, (2) 48", T-8 lamp, Instant Start Ballast, NLO (BF: .85-.95) Prismatic Acrylic Diffuser	1	24	Surface Mounted T8 LED Retrofit Lamp with External Driver LED 4' T8 Lamp (2) 12W Lamps	1		1092	0.05	0.02	78	35
753	MAIN BUILDING	FIRE SAFETY	2	53	4' Wraparound Surface Mounted Fluorescent, (2) 48", T-8 lamp, Instant Start Ballast, NLO (BF: .85-.95) Prismatic Acrylic Diffuser	2	24	Surface Mounted T8 LED Retrofit Lamp with External Driver LED 4' T8 Lamp (2) 12W Lamps			1560	0.11	0.05	166	74
754	MAIN BUILDING	MAINTENANCE OFFICE	4	80	2'x4' Troffer Recessed Fluorescent, (3) 48", T-8 lamp, Instant Start Ballast, NLO (BF: .85-.95) Microcell Diffuser	4	36	Recessed T8 LED Retrofit Lamp with External Driver LED 4' T8 Lamp (3) 12W Lamps	1		2730	0.32	0.14	1,169	519
755	MAIN BUILDING	MAINTENANCE OFFICE ENTRY	2	80	2'x4' Troffer Recessed Fluorescent, (3) 48", T-8 lamp, Instant Start Ballast, NLO (BF: .85-.95) Microcell Diffuser	2	36	Recessed T8 LED Retrofit Lamp with External Driver LED 4' T8 Lamp (3) 12W Lamps	1		2730	0.16	0.07	585	259
756	MAIN BUILDING	MAINTENANCE OFFICE ENTRY	1	80	2'x4' Troffer Recessed Fluorescent, (3) 48", T-8 lamp, Instant Start Ballast, NLO (BF: .85-.95) Prismatic Acrylic Diffuser	1	36	Recessed T8 LED Retrofit Lamp with External Driver LED 4' T8 Lamp (3) 12W Lamps	1		2730	0.08	0.04	292	130
757	MAIN BUILDING	STAFF RESTROOM	1	53	4' Wraparound Surface Mounted Fluorescent, (2) 48", T-8 lamp, Instant Start Ballast, NLO (BF: .85-.95) Prismatic Acrylic Diffuser	1	24	Surface Mounted T8 LED Retrofit Lamp with External Driver LED 4' T8 Lamp (2) 12W Lamps	1		1092	0.05	0.02	78	35
758	MAIN BUILDING	FACILITY MAINTENANCE MANAGERS OFFICE	2	80	2'x4' Troffer Recessed Fluorescent, (3) 48", T-8 lamp, Instant Start Ballast, NLO (BF: .85-.95) Microcell Diffuser	2	36	Recessed T8 LED Retrofit Lamp with External Driver LED 4' T8 Lamp (3) 12W Lamps	1		2730	0.16	0.07	585	259
759	MAIN BUILDING	MAINTENANCE OFFICE	3	80	2'x4' Troffer Recessed Fluorescent, (3) 48", T-8 lamp, Instant Start Ballast, NLO (BF: .85-.95) Microcell Diffuser	3	36	Recessed T8 LED Retrofit Lamp with External Driver LED 4' T8 Lamp (3) 12W Lamps	1		2730	0.24	0.11	877	389
760	MAIN BUILDING	MAINTENANCE SHOP CORRIDOR	7	53	4' Industrial Chain Mounted Fluorescent, (2) 48", T-8 lamp, Instant Start Ballast, NLO (BF: .85-.95) (No Diffuser)	7	24	Chain Mounted T8 LED Retrofit Lamp with External Driver LED 4' T8 Lamp (2) 12W Lamps			8760	0.37	0.17	3,265	1,457
761	MAIN BUILDING	PENTHOUSE MECHANICAL ROOM	26	53	4' Industrial Chain Mounted Fluorescent, (2) 48", T-8 lamp, Instant Start Ballast, NLO (BF: .85-.95) (No Diffuser)	26	24	Chain Mounted T8 LED Retrofit Lamp with External Driver LED 4' T8 Lamp (2) 12W Lamps			520	1.38	0.62	720	321
762	MAIN BUILDING	SHOP DEPARTMENT CAGES	47	53	4' Industrial Chain Mounted Fluorescent, (2) 48", T-8 lamp, Instant Start Ballast, NLO (BF: .85-.95) (No Diffuser)	47	24	Chain Mounted T8 LED Retrofit Lamp with External Driver LED 4' T8 Lamp (2) 12W Lamps			3640	2.50	1.12	9,110	4,065
763	MAIN BUILDING	SHOP DEPARTMENT CAGES	1	53	4' Strip Chain Mounted Fluorescent, (2) 48", T-8 lamp, Instant Start Ballast, NLO (BF: .85-.95) (No Diffuser)	1	24	Chain Mounted T8 LED Retrofit Lamp with External Driver LED 4' T8 Lamp (2) 12W Lamps			3640	0.05	0.02	194	86
764	MAIN BUILDING	INMATE RESTROOM	1	53	4' Wraparound Surface Mounted Fluorescent, (2) 48", T-8 lamp, Instant Start Ballast, NLO (BF: .85-.95) Prismatic Acrylic Diffuser	1	24	Surface Mounted T8 LED Retrofit Lamp with External Driver LED 4' T8 Lamp (2) 12W Lamps	1		1092	0.05	0.02	78	35
765	MAIN BUILDING	STAFF RESTROOM	1	53	4' Wraparound Surface Mounted Fluorescent, (2) 48", T-8 lamp, Instant Start Ballast, NLO (BF: .85-.95) Prismatic Acrylic Diffuser	1	24	Surface Mounted T8 LED Retrofit Lamp with External Driver LED 4' T8 Lamp (2) 12W Lamps	1		1092	0.05	0.02	78	35
766	MAIN BUILDING	JANITOR CLOSET	2	53	4' Wraparound Surface Mounted Fluorescent, (2) 48", T-8 lamp, Instant Start Ballast, NLO (BF: .85-.95) Prismatic Acrylic Diffuser	2	24	Surface Mounted T8 LED Retrofit Lamp with External Driver LED 4' T8 Lamp (2) 12W Lamps			1456	0.11	0.05	155	69
767	MAIN BUILDING	MAINTENANCE VESTIBULE	2	262	Recessed Can 10" Recessed Mercury Vapor, (1) 250W lamp Prismatic Acrylic Diffuser	2	49	Recessed Chip On Board (COB) Type Screw-in / Bypass Existing Ballast Light Emitting Diode Lamp, Screw-in, (1) 54W lamp			8760	0.52	0.10	4,585	851
768	MAIN BUILDING	MAINTENANCE VESTIBULE	1	19	Universal Face Exit Sign Surface Mounted EXIT Compact Fluorescent, (2) 7W lamp (No Diffuser)	1	9	Surface Mounted Upgrade EXIT Sign LED Light Fixture. (1) 9W			8760	0.02	0.01	166	78
769	MAIN BUILDING	COMMISSARY LOBBY	4	262	Recessed Can 10" Recessed Mercury Vapor, (1) 250W lamp Prismatic Acrylic Diffuser	4	49	Recessed Chip On Board (COB) Type Screw-in / Bypass Existing Ballast Light Emitting Diode Lamp, Screw-in, (1) 54W lamp			8760	1.05	0.19	9,171	1,703
770	MAIN BUILDING	COMMISSARY LOBBY	1	101	2'x4' Troffer Recessed Fluorescent, (4) 48", T-8 lamp, Instant Start Ballast, NLO (BF: .85-.95) Prismatic Acrylic Diffuser	1	48	Recessed T8 LED Retrofit Lamp with External Driver LED 4' T8 Lamp (4) 12W Lamps			8760	0.10	0.05	885	416
771	MAIN BUILDING	COMMISSARY LOBBY	2	3	Universal Face Exit Sign Surface Mounted EXIT Light Emitting Diode, (1) 3W lamp, Single Sided (No Diffuser)	2	3	Existing luminaire to remain as is No Retrofit. To remain as is.			8760	0.01	0.01	49	49
772	MAIN BUILDING	COMMISSARY WAREHOUSE	3	80	2'x4' Troffer Recessed Flanged Fluorescent, (3) 48", T-8 lamp, Instant Start Ballast, NLO (BF: .85-.95) Deep Cell Parabolic Diffuser	3	36	Recessed Flanged T8 LED Retrofit Lamp with External Driver LED 4' T8 Lamp (3) 12W Lamps			8760	0.24	0.11	2,111	937
773	MAIN BUILDING	COMMISSARY WAREHOUSE	1	53	4' Vapor Proof Surface Mounted Fluorescent, (2) 48", T-8 lamp, Instant Start Ballast, NLO (BF: .85-.95) Vapor Proof Gasketed Diffuser	1	24	Surface Mounted T8 LED Retrofit Lamp with External Driver LED 4' T8 Lamp (2) 12W Lamps			8760	0.05	0.02	466	208
774	MAIN BUILDING	COMMISSARY WAREHOUSE	21	53	4' Industrial Chain Mounted Fluorescent, (2) 48", T-8 lamp, Instant Start Ballast, NLO (BF: .85-.95) (No Diffuser)	21	24	Chain Mounted T8 LED Retrofit Lamp with External Driver LED 4' T8 Lamp (2) 12W Lamps - HIGH			8760	1.12	0.50	9,795	4,371
775	MAIN BUILDING	COMMISSARY OFFICE	2	80	2'x4' Troffer Recessed Fluorescent, (3) 48", T-8 lamp, Instant Start Ballast, NLO (BF: .85-.95) Prismatic Acrylic Diffuser	2	36	Recessed T8 LED Retrofit Lamp with External Driver LED 4' T8 Lamp (3) 12W Lamps	1		2730	0.16	0.07	585	259
776	MAIN BUILDING	5.109 INMATE RESTROOM	1	53	4' Wraparound Surface Mounted Fluorescent, (2) 48", T-8 lamp, Instant Start Ballast, NLO (BF: .85-.95) Prismatic Acrylic Diffuser	1	24	Surface Mounted T8 LED Retrofit Lamp with External Driver LED 4' T8 Lamp (2) 12W Lamps	1		1092	0.05	0.02	78	35
777	MAIN BUILDING	5.107 STAFF RESTROOM	1	53	4' Wraparound Surface Mounted Fluorescent, (2) 48", T-8 lamp, Instant Start Ballast, NLO (BF: .85-.95) Prismatic Acrylic Diffuser	1	24	Surface Mounted T8 LED Retrofit Lamp with External Driver LED 4' T8 Lamp (2) 12W Lamps	1		1092	0.05	0.02	78	35
778	MAIN BUILDING	COMMISSARY BACK VESTIBULE	2	53	4' Industrial Chain Mounted Fluorescent, (2) 48", T-8 lamp, Instant Start Ballast, NLO (BF: .85-.95) (No Diffuser)	2	24	Chain Mounted T8 LED Retrofit Lamp with External Driver LED 4' T8 Lamp (2) 12W Lamps			8760	0.11	0.05	933	416
779	MAIN BUILDING	LAUNDRY INMATE VESTIBULE	1	53	2'x4' Troffer Recessed Flanged Fluorescent, (2) 48", T-8 lamp, Instant Start Ballast, NLO (BF: .85-.95) Prismatic Acrylic Diffuser	1	24	Recessed Flanged T8 LED Retrofit Lamp with External Driver LED 4' T8 Lamp (2) 12W Lamps			8760	0.05	0.02	466	208

Line #	Facility Area	Space	Pre Fixture Qty	Pre Watts/ Fixt	Pre Description	Post Fixture Qty	Post Watt/ Fixt	Post Description	Wallswitch Sensor	Ceiling Sensor	Hours of Operation	Base kW	Proposed kW	Base kWh	Proposed kWh
780	MAIN BUILDING	LAUNDRY INMATE VESTIBULE	1	3	Universal Face Exit Sign Surface Mounted EXIT Light Emitting Diode, (1) 3W lamp, Single Sided (No Diffuser)	1	3	Existing luminaire to remain as is No Retrofit. To remain as is.			8760	0.00	0.00	25	25
781	MAIN BUILDING	LAUNDRY OPEN AREA	32	53	4' Industrial Chain Mounted Fluorescent, (2) 48", T-8 lamp, Instant Start Ballast, NLO (BF: .85-.95) (No Diffuser)	32	24	Chain Mounted T8 LED Retrofit Lamp with External Driver LED 4' T8 Lamp (2) 12W Lamps - HIGH			8760	1.70	0.76	14,926	6,660
782	MAIN BUILDING	LAUNDRY OPEN AREA	2	53	4' Wraparound Surface Mounted Fluorescent, (2) 48", T-8 lamp, Instant Start Ballast, NLO (BF: .85-.95) Prismatic Acrylic Diffuser	2	24	Surface Mounted T8 LED Retrofit Lamp with External Driver LED 4' T8 Lamp (2) 12W Lamps			8760	0.11	0.05	933	416
783	MAIN BUILDING	5.206 INMATE RESTROOM	1	53	4' Wraparound Surface Mounted Fluorescent, (2) 48", T-8 lamp, Instant Start Ballast, NLO (BF: .85-.95) Prismatic Acrylic Diffuser	1	24	Surface Mounted T8 LED Retrofit Lamp with External Driver LED 4' T8 Lamp (2) 12W Lamps	1		1092	0.05	0.02	78	35
784	MAIN BUILDING	5.205 INMATE RESTROOM	1	53	4' Wraparound Surface Mounted Fluorescent, (2) 48", T-8 lamp, Instant Start Ballast, NLO (BF: .85-.95) Prismatic Acrylic Diffuser	1	24	Surface Mounted T8 LED Retrofit Lamp with External Driver LED 4' T8 Lamp (2) 12W Lamps	1		1092	0.05	0.02	78	35
785	MAIN BUILDING	LAUNDRY OFFICE	2	80	2'x4' Troffer Recessed Fluorescent, (3) 48", T-8 lamp, Instant Start Ballast, NLO (BF: .85-.95) Prismatic Acrylic Diffuser	2	36	Recessed T8 LED Retrofit Lamp with External Driver LED 4' T8 Lamp (3) 12W Lamps	1		2730	0.16	0.07	585	259
786	MAIN BUILDING	TOOL ROOM	2	53	4' Wraparound Surface Mounted Fluorescent, (2) 48", T-8 lamp, Instant Start Ballast, NLO (BF: .85-.95) Prismatic Acrylic Diffuser	2	24	Surface Mounted T8 LED Retrofit Lamp with External Driver LED 4' T8 Lamp (2) 12W Lamps			3640	0.11	0.05	388	173
787	MAIN BUILDING	5.207 CHEMICAL STORAGE	2	53	4' Wraparound Surface Mounted Fluorescent, (2) 48", T-8 lamp, Instant Start Ballast, NLO (BF: .85-.95) Prismatic Acrylic Diffuser	2	24	Surface Mounted T8 LED Retrofit Lamp with External Driver LED 4' T8 Lamp (2) 12W Lamps			520	0.11	0.05	55	25
788	MAIN BUILDING	INMATE DINING #1	9	266	Cylinder Fixture Pendant Mounted Metal Halide, (1) 250W lamp Flat Glass Lens	9	99	Pendant Mounted Metal Alloy High-Bay LED Light Fixture. (1) 100W - HIGH			5824	2.40	0.89	13,955	5,189
789	MAIN BUILDING	INMATE DINING #1	24	53	4' Strip Cove Mounted Fluorescent, (2) 48", T-8 lamp, Instant Start Ballast, NLO (BF: .85-.95) (No Diffuser)	24	24	Cove Mounted T8 LED Retrofit Lamp with External Driver LED 4' T8 Lamp (2) 12W Lamps			5824	1.28	0.57	7,443	3,321
790	MAIN BUILDING	INMATE DINING #1	21	262	Recessed Can 10" Recessed Mercury Vapor, (1) 250W lamp Prismatic Acrylic Diffuser	21	49	Recessed Chip On Board (COB) Type Screw-in / Bypass Existing Ballast Light Emitting Diode Lamp, Screw-in, (1) 54W lamp			5824	5.50	1.02	32,010	5,944
791	MAIN BUILDING	SERVING LINE #1	6	80	2'x4' Troffer Recessed Flanged Fluorescent, (3) 48", T-8 lamp, Instant Start Ballast, NLO (BF: .85-.95) Prismatic Acrylic Diffuser	6	36	Recessed Flanged T8 LED Retrofit Lamp with External Driver LED 4' T8 Lamp (3) 12W Lamps			5824	0.48	0.21	2,807	1,245
792	MAIN BUILDING	SH ROOM (SERVES #1 DINING AND ODR DINI	7	65	4' Vapor Proof Surface Mounted Fluorescent, (2) 48", ES lamp Vapor Proof Gasketed Diffuser	7	24	Surface Mounted T8 LED Retrofit Lamp with External Driver LED 4' T8 Lamp (2) 12W Lamps			5824	0.45	0.17	2,649	969
793	MAIN BUILDING	INMATE DINING #2	9	266	Cylinder Fixture Pendant Mounted Metal Halide, (1) 250W lamp Flat Glass Lens	9	99	Pendant Mounted Metal Alloy High-Bay LED Light Fixture. (1) 100W - HIGH			5824	2.40	0.89	13,955	5,189
794	MAIN BUILDING	INMATE DINING #2	24	53	4' Strip Cove Mounted Fluorescent, (2) 48", T-8 lamp, Instant Start Ballast, NLO (BF: .85-.95) (No Diffuser)	24	24	Cove Mounted T8 LED Retrofit Lamp with External Driver LED 4' T8 Lamp (2) 12W Lamps			5824	1.28	0.57	7,443	3,321
795	MAIN BUILDING	INMATE DINING #2	21	262	Recessed Can 10" Recessed Mercury Vapor, (1) 250W lamp Prismatic Acrylic Diffuser	21	49	Recessed Chip On Board (COB) Type Screw-in / Bypass Existing Ballast Light Emitting Diode Lamp, Screw-in, (1) 54W lamp			5824	5.50	1.02	32,010	5,944
796	MAIN BUILDING	SERVING LINE #2	6	80	2'x4' Troffer Recessed Flanged Fluorescent, (3) 48", T-8 lamp, Instant Start Ballast, NLO (BF: .85-.95) Prismatic Acrylic Diffuser	6	36	Recessed Flanged T8 LED Retrofit Lamp with External Driver LED 4' T8 Lamp (3) 12W Lamps			5824	0.48	0.21	2,807	1,245
797	MAIN BUILDING	ASH ROOM (SERVES #2 DINING AND #3 DINI	7	65	4' Vapor Proof Surface Mounted Fluorescent, (2) 48", ES lamp Vapor Proof Gasketed Diffuser	7	24	Surface Mounted T8 LED Retrofit Lamp with External Driver LED 4' T8 Lamp (2) 12W Lamps			5824	0.45	0.17	2,649	969
798	MAIN BUILDING	INMATE DINING #3	9	266	Cylinder Fixture Pendant Mounted Metal Halide, (1) 250W lamp Flat Glass Lens	9	99	Pendant Mounted Metal Alloy High-Bay LED Light Fixture. (1) 100W - HIGH			5824	2.40	0.89	13,955	5,189
799	MAIN BUILDING	INMATE DINING #3	24	53	4' Strip Cove Mounted Fluorescent, (2) 48", T-8 lamp, Instant Start Ballast, NLO (BF: .85-.95) (No Diffuser)	24	24	Cove Mounted T8 LED Retrofit Lamp with External Driver LED 4' T8 Lamp (2) 12W Lamps			5824	1.28	0.57	7,443	3,321
800	MAIN BUILDING	INMATE DINING #3	21	262	Recessed Can 10" Recessed Mercury Vapor, (1) 250W lamp Prismatic Acrylic Diffuser	21	49	Recessed Chip On Board (COB) Type Screw-in / Bypass Existing Ballast Light Emitting Diode Lamp, Screw-in, (1) 54W lamp			5824	5.50	1.02	32,010	5,944
801	MAIN BUILDING	SERVING LINE #3	6	80	2'x4' Troffer Recessed Flanged Fluorescent, (3) 48", T-8 lamp, Instant Start Ballast, NLO (BF: .85-.95) Prismatic Acrylic Diffuser	6	36	Recessed Flanged T8 LED Retrofit Lamp with External Driver LED 4' T8 Lamp (3) 12W Lamps			5824	0.48	0.21	2,807	1,245
802	MAIN BUILDING	DETERGENT STORAGE	1	53	4' Wraparound Surface Mounted Fluorescent, (2) 48", T-8 lamp, Instant Start Ballast, NLO (BF: .85-.95) Prismatic Acrylic Diffuser	1	24	Surface Mounted T8 LED Retrofit Lamp with External Driver LED 4' T8 Lamp (2) 12W Lamps			1560	0.05	0.02	83	37
803	MAIN BUILDING	JANITOR CLOSET	1	53	4' Wraparound Surface Mounted Fluorescent, (2) 48", T-8 lamp, Instant Start Ballast, NLO (BF: .85-.95) Prismatic Acrylic Diffuser	1	24	Surface Mounted T8 LED Retrofit Lamp with External Driver LED 4' T8 Lamp (2) 12W Lamps			1456	0.05	0.02	78	35
804	MAIN BUILDING	DIET KITCHEN	5	80	2'x4' Troffer Recessed Fluorescent, (3) 48", T-8 lamp, Instant Start Ballast, NLO (BF: .85-.95) Prismatic Acrylic Diffuser	5	36	Recessed T8 LED Retrofit Lamp with External Driver LED 4' T8 Lamp (3) 12W Lamps			5824	0.40	0.18	2,339	1,038
805	MAIN BUILDING	KITCHEN HOODS	4	53	1'x4' Troffer Recessed Flanged Fluorescent, (2) 48", T-8 lamp, Instant Start Ballast, NLO (BF: .85-.95) Prismatic Acrylic Diffuser	4	24	Recessed Flanged T8 LED Retrofit Lamp with External Driver LED 4' T8 Lamp (2) 12W Lamps			5824	0.21	0.10	1,240	554
806	MAIN BUILDING	ICE ROOM	2	65	4' Vapor Proof Surface Mounted Fluorescent, (2) 48", ES lamp Vapor Proof Gasketed Diffuser	2	24	Surface Mounted T8 LED Retrofit Lamp with External Driver LED 4' T8 Lamp (2) 12W Lamps			5824	0.13	0.05	757	277
807	MAIN BUILDING	DETERGENT STORAGE	1	53	4' Wraparound Surface Mounted Fluorescent, (2) 48", T-8 lamp, Instant Start Ballast, NLO (BF: .85-.95) Prismatic Acrylic Diffuser	1	24	Surface Mounted T8 LED Retrofit Lamp with External Driver LED 4' T8 Lamp (2) 12W Lamps			1560	0.05	0.02	83	37
808	MAIN BUILDING	JANITOR CLOSET	2	53	4' Wraparound Surface Mounted Fluorescent, (2) 48", T-8 lamp, Instant Start Ballast, NLO (BF: .85-.95) Prismatic Acrylic Diffuser	2	24	Surface Mounted T8 LED Retrofit Lamp with External Driver LED 4' T8 Lamp (2) 12W Lamps			1456	0.11	0.05	155	69
809	MAIN BUILDING	MAIN KITCHEN	82	65	4' Vapor Proof Surface Mounted Fluorescent, (2) 48", ES lamp Vapor Proof Gasketed Diffuser	82	24	Surface Mounted T8 LED Retrofit Lamp with External Driver LED 4' T8 Lamp (2) 12W Lamps			5824	5.33	1.95	31,032	11,347

Line #	Facility Area	Space	Pre Fixture Qty	Pre Watts/ Fixt	Pre Description	Post Fixture Qty	Post Watt/ Fixt	Post Description	Wallswitch Sensor	Ceiling Sensor	Hours of Operation	Base kW	Proposed kW	Base kWh	Proposed kWh
810	MAIN BUILDING	MAIN KITCHEN	4	19	Universal Face Exit Sign Surface Mounted EXIT Compact Fluorescent, (2) 7W lamp (No Diffuser)	4	9	Surface Mounted Upgrade EXIT Sign LED Light Fixture. (1) 9W			8760	0.08	0.04	664	312
811	MAIN BUILDING	KITCHEN HOODS	20	53	1'x4' Troffer Recessed Flanged Fluorescent, (2) 48", T-8 lamp, Instant Start Ballast, NLO (BF: .85-.95) Prismatic Acrylic Diffuser	20	24	Recessed Flanged T8 LED Retrofit Lamp with External Driver LED 4' T8 Lamp (2) 12W Lamps			5824	1.06	0.48	6,202	2,768
812	MAIN BUILDING	KITCHEN MANAGERS OFFICE	6	80	2'x4' Troffer Recessed Fluorescent, (3) 48", T-8 lamp, Instant Start Ballast, NLO (BF: .85-.95) Prismatic Acrylic Diffuser	6	36	Recessed T8 LED Retrofit Lamp with External Driver LED 4' T8 Lamp (3) 12W Lamps		1	2730	0.48	0.21	1,754	778
813	MAIN BUILDING	OFFICE	2	80	2'x4' Troffer Recessed Fluorescent, (3) 48", T-8 lamp, Instant Start Ballast, NLO (BF: .85-.95) Prismatic Acrylic Diffuser	2	36	Recessed T8 LED Retrofit Lamp with External Driver LED 4' T8 Lamp (3) 12W Lamps	1		2730	0.16	0.07	585	259
814	MAIN BUILDING	RHU VESTIBULE	4	65	4' Vapor Proof Surface Mounted Fluorescent, (2) 48", ES lamp Vapor Proof Gasketed Diffuser	4	24	Surface Mounted T8 LED Retrofit Lamp with External Driver LED 4' T8 Lamp (2) 12W Lamps			8760	0.26	0.10	2,277	833
815	MAIN BUILDING	STAFF LOCKER ENTRY	1	101	4' Wraparound Surface Mounted Fluorescent, (4) 48", T-8 lamp, Instant Start Ballast, NLO (BF: .85-.95) Prismatic Acrylic Diffuser	1	48	Surface Mounted T8 LED Retrofit Lamp with External Driver LED 4' T8 Lamp (4) 12W Lamps			5824	0.10	0.05	589	277
816	MAIN BUILDING	STAFF LOCKER ROOM	2	53	4' Wraparound Surface Mounted Fluorescent, (2) 48", T-8 lamp, Instant Start Ballast, NLO (BF: .85-.95) Prismatic Acrylic Diffuser	2	24	Surface Mounted T8 LED Retrofit Lamp with External Driver LED 4' T8 Lamp (2) 12W Lamps			5824	0.11	0.05	620	277
817	MAIN BUILDING	5.123 STAFF RESTROOM	1	53	4' Wraparound Surface Mounted Fluorescent, (2) 48", T-8 lamp, Instant Start Ballast, NLO (BF: .85-.95) Prismatic Acrylic Diffuser	1	24	Surface Mounted T8 LED Retrofit Lamp with External Driver LED 4' T8 Lamp (2) 12W Lamps	1		1092	0.05	0.02	78	35
818	MAIN BUILDING	INMATE RESTROOM	1	53	4' Wraparound Surface Mounted Fluorescent, (2) 48", T-8 lamp, Instant Start Ballast, NLO (BF: .85-.95) Prismatic Acrylic Diffuser	1	24	Surface Mounted T8 LED Retrofit Lamp with External Driver LED 4' T8 Lamp (2) 12W Lamps	1		1092	0.05	0.02	78	35
819	MAIN BUILDING	FOOD PREP CORRIDOR	7	65	4' Vapor Proof Surface Mounted Fluorescent, (2) 48", ES lamp Vapor Proof Gasketed Diffuser	7	24	Surface Mounted T8 LED Retrofit Lamp with External Driver LED 4' T8 Lamp (2) 12W Lamps			8760	0.45	0.17	3,985	1,457
820	MAIN BUILDING	FOOD PREP CORRIDOR	1	19	Universal Face Exit Sign Surface Mounted EXIT Compact Fluorescent, (2) 7W lamp (No Diffuser)	1	9	Surface Mounted Upgrade EXIT Sign LED Light Fixture. (1) 9W			8760	0.02	0.01	166	78
821	MAIN BUILDING	MEAT PREP ROOM	8	65	4' Vapor Proof Surface Mounted Fluorescent, (2) 48", ES lamp Vapor Proof Gasketed Diffuser	8	24	Surface Mounted T8 LED Retrofit Lamp with External Driver LED 4' T8 Lamp (2) 12W Lamps			5824	0.52	0.19	3,028	1,107
822	MAIN BUILDING	WALK IN COOLER	6	8	Jelly Jar Surface Mounted Light Emitting Diode Lamp, Screw-in, (1) 9W lamp Glass Jelly Jar	6	8	Surface Mounted Install LED Screw-in A-Style Lamp Light Emitting Diode Lamp, Screw-in, (1) 9W lamp			5824	0.05	0.05	269	283
823	MAIN BUILDING	VEGETABLE PREP ROOM	8	65	4' Vapor Proof Surface Mounted Fluorescent, (2) 48", ES lamp Vapor Proof Gasketed Diffuser	8	24	Surface Mounted T8 LED Retrofit Lamp with External Driver LED 4' T8 Lamp (2) 12W Lamps			5824	0.52	0.19	3,028	1,107
824	MAIN BUILDING	WALK IN COOLER	4	57	Jelly Jar Surface Mounted Incandescent, (1) 60W lamp Glass Jelly Jar	4	8	Surface Mounted Install LED Screw-in A-Style Lamp Light Emitting Diode Lamp, Screw-in, (1) 9W lamp			5824	0.23	0.03	1,328	189
825	MAIN BUILDING	WALK IN COOLER	6	57	Jelly Jar Surface Mounted Incandescent, (1) 60W lamp Glass Jelly Jar	6	8	Surface Mounted Install LED Screw-in A-Style Lamp Light Emitting Diode Lamp, Screw-in, (1) 9W lamp			5824	0.34	0.05	1,992	283
826	MAIN BUILDING	KITCHEN CUSTODIAL ROOM	4	65	4' Vapor Proof Surface Mounted Fluorescent, (2) 48", ES lamp Vapor Proof Gasketed Diffuser	4	24	Surface Mounted T8 LED Retrofit Lamp with External Driver LED 4' T8 Lamp (2) 12W Lamps			5824	0.26	0.10	1,514	554
827	MAIN BUILDING	5.103 PAPER PRODUCTS	3	65	4' Vapor Proof Surface Mounted Fluorescent, (2) 48", ES lamp Vapor Proof Gasketed Diffuser	3	24	Surface Mounted T8 LED Retrofit Lamp with External Driver LED 4' T8 Lamp (2) 12W Lamps			3640	0.19	0.07	710	259
828	MAIN BUILDING	5.102 DRY STORAGE	9	65	4' Vapor Proof Surface Mounted Fluorescent, (2) 48", ES lamp Vapor Proof Gasketed Diffuser	9	24	Surface Mounted T8 LED Retrofit Lamp with External Driver LED 4' T8 Lamp (2) 12W Lamps			3640	0.58	0.21	2,129	778
829	MAIN BUILDING	KITCHEN DOCK RECEIVING	9	53	4' Wraparound Surface Mounted Fluorescent, (2) 48", T-8 lamp, Instant Start Ballast, NLO (BF: .85-.95) (No Diffuser)	9	24	Surface Mounted T8 LED Retrofit Lamp with External Driver LED 4' T8 Lamp (2) 12W Lamps			5824	0.48	0.21	2,791	1,245
830	MAIN BUILDING	BAKERY	13	65	4' Vapor Proof Surface Mounted Fluorescent, (2) 48", ES lamp Vapor Proof Gasketed Diffuser	13	24	Surface Mounted T8 LED Retrofit Lamp with External Driver LED 4' T8 Lamp (2) 12W Lamps			5824	0.84	0.31	4,920	1,799
831	MAIN BUILDING	BAKERY	2	53	1'x4' Troffer Recessed Flanged Fluorescent, (2) 48", T-8 lamp, Instant Start Ballast, NLO (BF: .85-.95) Prismatic Acrylic Diffuser	2	24	Recessed Flanged T8 LED Retrofit Lamp with External Driver LED 4' T8 Lamp (2) 12W Lamps			5824	0.11	0.05	620	277
832	MAIN BUILDING	BAKERY DRY STORAGE	2	65	4' Vapor Proof Surface Mounted Fluorescent, (2) 48", ES lamp Vapor Proof Gasketed Diffuser	2	24	Surface Mounted T8 LED Retrofit Lamp with External Driver LED 4' T8 Lamp (2) 12W Lamps			3640	0.13	0.05	473	173
833	MAIN BUILDING	EQUIPMENT ROOM	2	65	4' Vapor Proof Surface Mounted Fluorescent, (2) 48", ES lamp Vapor Proof Gasketed Diffuser	2	24	Surface Mounted T8 LED Retrofit Lamp with External Driver LED 4' T8 Lamp (2) 12W Lamps			3640	0.13	0.05	473	173
834	MAIN BUILDING	ODR DINING HALL	5	80	2'x4' Troffer Recessed Flanged Fluorescent, (3) 48", T-8 lamp, Instant Start Ballast, NLO (BF: .85-.95) Prismatic Acrylic Diffuser	5	36	Recessed Flanged T8 LED Retrofit Lamp with External Driver LED 4' T8 Lamp (3) 12W Lamps			5824	0.40	0.18	2,339	1,038
835	MAIN BUILDING	ODR DINING HALL	12	262	Recessed Can 10" Recessed Mercury Vapor, (1) 250W lamp Prismatic Acrylic Diffuser	12	49	Recessed Chip On Board (COB) Type Screw-in / Bypass Existing Ballast Light Emitting Diode Lamp, Screw-in, (1) 54W lamp			5824	3.14	0.58	18,291	3,397
836	MAIN BUILDING	ODR DINING HALL	6	266	Cylinder Fixture Pendant Mounted Metal Halide, (1) 250W lamp Flat Glass Lens	6	99	Pendant Mounted Metal Alloy High-Bay LED Light Fixture. (1) 100W - HIGH			5824	1.60	0.59	9,303	3,459
837	MAIN BUILDING	ODR DINING HALL	12	53	4' Strip Cove Mounted Fluorescent, (2) 48", T-8 lamp, Instant Start Ballast, NLO (BF: .85-.95) (No Diffuser)	12	24	Cove Mounted T8 LED Retrofit Lamp with External Driver LED 4' T8 Lamp (2) 12W Lamps			5824	0.64	0.29	3,721	1,661
838	MAIN BUILDING	4.304 MENS STAFF RESTROOM	1	53	4' Wraparound Surface Mounted Fluorescent, (2) 48", T-8 lamp, Instant Start Ballast, NLO (BF: .85-.95) Prismatic Acrylic Diffuser	1	24	Surface Mounted T8 LED Retrofit Lamp with External Driver LED 4' T8 Lamp (2) 12W Lamps	1		1092	0.05	0.02	78	35
839	MAIN BUILDING	4.303 WOMENS STAFF RESTROOM	1	53	4' Wraparound Surface Mounted Fluorescent, (2) 48", T-8 lamp, Instant Start Ballast, NLO (BF: .85-.95) Prismatic Acrylic Diffuser	1	24	Surface Mounted T8 LED Retrofit Lamp with External Driver LED 4' T8 Lamp (2) 12W Lamps	1		1092	0.05	0.02	78	35

Line #	Facility Area	Space	Pre Fixture Qty	Pre Watts/ Fixt	Pre Description	Post Fixture Qty	Post Watt/ Fixt	Post Description	Wallswitch Sensor	Ceiling Sensor	Hours of Operation	Base kW	Proposed kW	Base kWh	Proposed kWh
840	MAIN BUILDING	MAIN MEDICAL / R&D / VISITATION LOBBY	4	266	2'x2' Troffer Recessed Metal Halide, (1) 250W lamp Prismatic Acrylic Diffuser	4	49	Recessed Chip On Board (COB) Type Screw-in / Bypass Existing Ballast Light Emitting Diode Lamp, Screw-in, (1) 54W lamp			8760	1.06	0.19	9,329	1,703
841	MAIN BUILDING	MAIN MEDICAL / R&D / VISITATION LOBBY	2	101	2'x4' Troffer Recessed Fluorescent, (4) 48", T-8 lamp, Instant Start Ballast, NLO (BF: .85-.95) Prismatic Acrylic Diffuser	2	48	Recessed T8 LED Retrofit Lamp with External Driver LED 4' T8 Lamp (4) 12W Lamps			8760	0.20	0.10	1,771	833
842	MAIN BUILDING	MAIN MEDICAL / R&D / VISITATION LOBBY	1	19	Universal Face Exit Sign Surface Mounted EXIT Compact Fluorescent, (2) 7W lamp (No Diffuser)	1	9	Surface Mounted Upgrade EXIT Sign LED Light Fixture. (1) 9W			8760	0.02	0.01	166	78
843	MAIN BUILDING	MEDICAL WAITING ROOM	8	101	4' Wraparound Surface Mounted Fluorescent, (4) 48", T-8 lamp, Instant Start Ballast, NLO (BF: .85-.95) Prismatic Acrylic Diffuser	8	48	Surface Mounted T8 LED Retrofit Lamp with External Driver LED 4' T8 Lamp (4) 12W Lamps			3640	0.81	0.38	2,943	1,384
844	MAIN BUILDING	MEDICAL WAITING ROOM	2	19	Universal Face Exit Sign Surface Mounted EXIT Compact Fluorescent, (2) 7W lamp (No Diffuser)	2	9	Surface Mounted Upgrade EXIT Sign LED Light Fixture. (1) 9W			8760	0.04	0.02	332	156
845	MAIN BUILDING	CLINIC CORRIDOR	15	53	2'x4' Troffer Recessed Fluorescent, (2) 48", T-8 lamp, Instant Start Ballast, NLO (BF: .85-.95) Prismatic Acrylic Diffuser	15	24	Recessed T8 LED Retrofit Lamp with External Driver LED 4' T8 Lamp (2) 12W Lamps			8760	0.80	0.36	6,997	3,122
846	MAIN BUILDING	CLINIC CORRIDOR	1	101	2'x4' Troffer Recessed Fluorescent, (4) 48", T-8 lamp, Instant Start Ballast, NLO (BF: .85-.95) Prismatic Acrylic Diffuser	1	48	Recessed T8 LED Retrofit Lamp with External Driver LED 4' T8 Lamp (4) 12W Lamps			8760	0.10	0.05	885	416
847	MAIN BUILDING	CLINIC CORRIDOR	2	3	Universal Face Exit Sign Surface Mounted EXIT Light Emitting Diode, (1) 3W lamp, Single Sided (No Diffuser)	2	3	Existing luminaire to remain as is No Retrofit. To remain as is.			8760	0.01	0.01	49	49
848	MAIN BUILDING	CLINIC CORRIDOR	1	19	Universal Face Exit Sign Surface Mounted EXIT Compact Fluorescent, (2) 7W lamp (No Diffuser)	1	9	Surface Mounted Upgrade EXIT Sign LED Light Fixture. (1) 9W			8760	0.02	0.01	166	78
849	MAIN BUILDING	3.214 DARK ROOM	3	80	2'x4' Troffer Recessed Fluorescent, (3) 48", T-8 lamp, Instant Start Ballast, NLO (BF: .85-.95) Prismatic Acrylic Diffuser	3	36	Recessed T8 LED Retrofit Lamp with External Driver LED 4' T8 Lamp (3) 12W Lamps			1560	0.24	0.11	376	167
850	MAIN BUILDING	2.215 X-RAY OFFICE	3	80	2'x4' Troffer Recessed Fluorescent, (3) 48", T-8 lamp, Instant Start Ballast, NLO (BF: .85-.95) Prismatic Acrylic Diffuser	3	36	Recessed T8 LED Retrofit Lamp with External Driver LED 4' T8 Lamp (3) 12W Lamps	1		2730	0.24	0.11	877	389
851	MAIN BUILDING	3.223 ELECTRICAL CLOSET	1	53	4' Wraparound Surface Mounted Fluorescent, (2) 48", T-8 lamp, Instant Start Ballast, NLO (BF: .85-.95) Prismatic Acrylic Diffuser	1	24	Surface Mounted T8 LED Retrofit Lamp with External Driver LED 4' T8 Lamp (2) 12W Lamps			520	0.05	0.02	28	12
852	MAIN BUILDING	3.213 X-RAY LAB	1	101	4' Wraparound Surface Mounted Fluorescent, (4) 48", T-8 lamp, Instant Start Ballast, NLO (BF: .85-.95) Prismatic Acrylic Diffuser	1	48	Surface Mounted T8 LED Retrofit Lamp with External Driver LED 4' T8 Lamp (4) 12W Lamps			3640	0.10	0.05	368	173
853	MAIN BUILDING	3.213 X-RAY LAB	2	57	Recessed Can 8" Recessed Incandescent, (1) 60W lamp Frosted Glass Lens	2	9	Recessed Install LED Screw-in BR30 Lamp Light Emitting Diode Lamp, Screw-in, (1) 10W lamp			3640	0.11	0.02	415	66
854	MAIN BUILDING	3.110 OFFICE CORRIDOR	3	53	2'x4' Troffer Recessed Fluorescent, (2) 48", T-8 lamp, Instant Start Ballast, NLO (BF: .85-.95) Prismatic Acrylic Diffuser	3	24	Recessed T8 LED Retrofit Lamp with External Driver LED 4' T8 Lamp (2) 12W Lamps	1		2730	0.16	0.07	581	259
855	MAIN BUILDING	3.110 OFFICE CORRIDOR	2	80	2'x4' Troffer Recessed Fluorescent, (3) 48", T-8 lamp, Instant Start Ballast, NLO (BF: .85-.95) Prismatic Acrylic Diffuser	2	36	Recessed T8 LED Retrofit Lamp with External Driver LED 4' T8 Lamp (3) 12W Lamps	1		2730	0.16	0.07	585	259
856	MAIN BUILDING	3.108 OFFICE	3	80	2'x4' Troffer Recessed Fluorescent, (3) 48", T-8 lamp, Instant Start Ballast, NLO (BF: .85-.95) Prismatic Acrylic Diffuser	3	36	Recessed T8 LED Retrofit Lamp with External Driver LED 4' T8 Lamp (3) 12W Lamps	1		2730	0.24	0.11	877	389
857	MAIN BUILDING	3.101 OFFICE	3	80	2'x4' Troffer Recessed Fluorescent, (3) 48", T-8 lamp, Instant Start Ballast, NLO (BF: .85-.95) Prismatic Acrylic Diffuser	3	36	Recessed T8 LED Retrofit Lamp with External Driver LED 4' T8 Lamp (3) 12W Lamps	1		2730	0.24	0.11	877	389
858	MAIN BUILDING	3.109 OFFICE	2	80	2'x4' Troffer Recessed Fluorescent, (3) 48", T-8 lamp, Instant Start Ballast, NLO (BF: .85-.95) Prismatic Acrylic Diffuser	2	36	Recessed T8 LED Retrofit Lamp with External Driver LED 4' T8 Lamp (3) 12W Lamps	1		2730	0.16	0.07	585	259
859	MAIN BUILDING	3.107 STAFF WOMENS RESTROOM	1	53	4' Wraparound Surface Mounted Fluorescent, (2) 48", T-8 lamp, Instant Start Ballast, NLO (BF: .85-.95) Prismatic Acrylic Diffuser	1	24	Surface Mounted T8 LED Retrofit Lamp with External Driver LED 4' T8 Lamp (2) 12W Lamps	1		1092	0.05	0.02	78	35
860	MAIN BUILDING	3.112 STAFF MENS RESTROOM	1	53	4' Wraparound Surface Mounted Fluorescent, (2) 48", T-8 lamp, Instant Start Ballast, NLO (BF: .85-.95) Prismatic Acrylic Diffuser	1	24	Surface Mounted T8 LED Retrofit Lamp with External Driver LED 4' T8 Lamp (2) 12W Lamps	1		1092	0.05	0.02	78	35
861	MAIN BUILDING	3.111 OFFICE	2	80	2'x4' Troffer Recessed Fluorescent, (3) 48", T-8 lamp, Instant Start Ballast, NLO (BF: .85-.95) Prismatic Acrylic Diffuser	2	36	Recessed T8 LED Retrofit Lamp with External Driver LED 4' T8 Lamp (3) 12W Lamps	1		2730	0.16	0.07	585	259
862	MAIN BUILDING	3.104 OFFICE	2	80	2'x4' Troffer Recessed Fluorescent, (3) 48", T-8 lamp, Instant Start Ballast, NLO (BF: .85-.95) Prismatic Acrylic Diffuser	2	36	Recessed T8 LED Retrofit Lamp with External Driver LED 4' T8 Lamp (3) 12W Lamps	1		2730	0.16	0.07	585	259
863	MAIN BUILDING	3.102 OFFICE	2	80	2'x4' Troffer Recessed Fluorescent, (3) 48", T-8 lamp, Instant Start Ballast, NLO (BF: .85-.95) Prismatic Acrylic Diffuser	2	36	Recessed T8 LED Retrofit Lamp with External Driver LED 4' T8 Lamp (3) 12W Lamps	1		2730	0.16	0.07	585	259
864	MAIN BUILDING	3.105 OFFICE	2	80	2'x4' Troffer Recessed Fluorescent, (3) 48", T-8 lamp, Instant Start Ballast, NLO (BF: .85-.95) Prismatic Acrylic Diffuser	2	36	Recessed T8 LED Retrofit Lamp with External Driver LED 4' T8 Lamp (3) 12W Lamps	1		2730	0.16	0.07	585	259
865	MAIN BUILDING	3.206 EXAM ROOM	4	53	2'x4' Troffer Recessed Fluorescent, (2) 48", T-8 lamp, Instant Start Ballast, NLO (BF: .85-.95) Prismatic Acrylic Diffuser	4	24	Recessed T8 LED Retrofit Lamp with External Driver LED 4' T8 Lamp (2) 12W Lamps			3640	0.21	0.10	775	346
866	MAIN BUILDING	EXAM ROOM RESTROOM (SHARED)	1	53	4' Wraparound Surface Mounted Fluorescent, (2) 48", T-8 lamp, Instant Start Ballast, NLO (BF: .85-.95) Prismatic Acrylic Diffuser	1	24	Surface Mounted T8 LED Retrofit Lamp with External Driver LED 4' T8 Lamp (2) 12W Lamps	1		1092	0.05	0.02	78	35
867	MAIN BUILDING	3.204 EXAM ROOM	4	53	4' Wraparound Surface Mounted Fluorescent, (2) 48", T-8 lamp, Instant Start Ballast, NLO (BF: .85-.95) Prismatic Acrylic Diffuser	4	24	Surface Mounted T8 LED Retrofit Lamp with External Driver LED 4' T8 Lamp (2) 12W Lamps			3640	0.21	0.10	775	346
868	MAIN BUILDING	3.205 EXAM ROOM	4	53	4' Wraparound Surface Mounted Fluorescent, (2) 48", T-8 lamp, Instant Start Ballast, NLO (BF: .85-.95) Prismatic Acrylic Diffuser	4	24	Surface Mounted T8 LED Retrofit Lamp with External Driver LED 4' T8 Lamp (2) 12W Lamps			3640	0.21	0.10	775	346
869	MAIN BUILDING	3.218 INMATE RESTROOM	1	53	4' Wraparound Surface Mounted Fluorescent, (2) 48", T-8 lamp, Instant Start Ballast, NLO (BF: .85-.95) Prismatic Acrylic Diffuser	1	24	Surface Mounted T8 LED Retrofit Lamp with External Driver LED 4' T8 Lamp (2) 12W Lamps	1		1092	0.05	0.02	78	35

Line #	Facility Area	Space	Pre Fixture Qty	Pre Watts/ Fixt	Pre Description	Post Fixture Qty	Post Watt/ Fixt	Post Description	Wallswitch Sensor	Ceiling Sensor	Hours of Operation	Base kW	Proposed kW	Base kWh	Proposed kWh
870	MAIN BUILDING	3.207 LAB WORKROOM	2	80	2'x4' Troffer Recessed Fluorescent, (3) 48", T-8 lamp, Instant Start Ballast, NLO (BF: .85-.95) Prismatic Acrylic Diffuser	2	36	Recessed T8 LED Retrofit Lamp with External Driver LED 4' T8 Lamp (3) 12W Lamps			3640	0.16	0.07	585	259
871	MAIN BUILDING	3.507 DENTAL SERVICES SUITE	3	53	2'x4' Troffer Recessed Fluorescent, (2) 48", T-8 lamp, Instant Start Ballast, NLO (BF: .85-.95) Prismatic Acrylic Diffuser	3	24	Recessed T8 LED Retrofit Lamp with External Driver LED 4' T8 Lamp (2) 12W Lamps			3640	0.16	0.07	581	259
872	MAIN BUILDING	3.507 DENTAL SERVICES SUITE	8	80	2'x4' Troffer Recessed Fluorescent, (3) 48", T-8 lamp, Instant Start Ballast, NLO (BF: .85-.95) Prismatic Acrylic Diffuser	8	36	Recessed T8 LED Retrofit Lamp with External Driver LED 4' T8 Lamp (3) 12W Lamps			3640	0.64	0.29	2,339	1,038
873	MAIN BUILDING	3.504 DENTAL LAB	3	80	2'x4' Troffer Recessed Flanged Fluorescent, (3) 48", T-8 lamp, Instant Start Ballast, NLO (BF: .85-.95) Prismatic Acrylic Diffuser	3	36	Recessed Flanged T8 LED Retrofit Lamp with External Driver LED 4' T8 Lamp (3) 12W Lamps			3640	0.24	0.11	877	389
874	MAIN BUILDING	3.501 DENTAL OFFICE	2	80	2'x4' Troffer Recessed Fluorescent, (3) 48", T-8 lamp, Instant Start Ballast, NLO (BF: .85-.95) Prismatic Acrylic Diffuser	2	36	Recessed T8 LED Retrofit Lamp with External Driver LED 4' T8 Lamp (3) 12W Lamps	1		2730	0.16	0.07	585	259
875	MAIN BUILDING	PSYCHIATRY OFFICE	1	80	2'x4' Troffer Recessed Flanged Fluorescent, (3) 48", T-8 lamp, Instant Start Ballast, NLO (BF: .85-.95) Prismatic Acrylic Diffuser	1	36	Recessed Flanged T8 LED Retrofit Lamp with External Driver LED 4' T8 Lamp (3) 12W Lamps	1		2730	0.08	0.04	292	130
876	MAIN BUILDING	3.210 TREATMENT ROOM	3	80	2'x4' Troffer Recessed Fluorescent, (3) 48", T-8 lamp, Instant Start Ballast, NLO (BF: .85-.95) Prismatic Acrylic Diffuser	3	36	Recessed T8 LED Retrofit Lamp with External Driver LED 4' T8 Lamp (3) 12W Lamps			3640	0.24	0.11	877	389
877	MAIN BUILDING	3.210 TREATMENT ROOM	2	53	4' Wraparound Surface Mounted Fluorescent, (2) 48", T-8 lamp, Instant Start Ballast, NLO (BF: .85-.95) Prismatic Acrylic Diffuser	2	24	Surface Mounted T8 LED Retrofit Lamp with External Driver LED 4' T8 Lamp (2) 12W Lamps			3640	0.11	0.05	388	173
878	MAIN BUILDING	AMBULANCE CART STORAGE GARAGE	2	53	4' Wraparound Surface Mounted Fluorescent, (2) 48", T-8 lamp, Instant Start Ballast, NLO (BF: .85-.95) Prismatic Acrylic Diffuser	2	24	Surface Mounted T8 LED Retrofit Lamp with External Driver LED 4' T8 Lamp (2) 12W Lamps			520	0.11	0.05	55	25
879	MAIN BUILDING	3.209 TB TREATMENT	2	80	2'x4' Troffer Recessed Fluorescent, (3) 48", T-8 lamp, Instant Start Ballast, NLO (BF: .85-.95) Prismatic Acrylic Diffuser	2	36	Recessed T8 LED Retrofit Lamp with External Driver LED 4' T8 Lamp (3) 12W Lamps			3640	0.16	0.07	585	259
880	MAIN BUILDING	MEDICAL RECORDS	9	80	2'x4' Troffer Recessed Fluorescent, (3) 48", T-8 lamp, Instant Start Ballast, NLO (BF: .85-.95) Prismatic Acrylic Diffuser	9	36	Recessed T8 LED Retrofit Lamp with External Driver LED 4' T8 Lamp (3) 12W Lamps			3640	0.72	0.32	2,631	1,168
881	MAIN BUILDING	MEDICAL RECORDS	2	53	4' Wraparound Surface Mounted Fluorescent, (2) 48", T-8 lamp, Instant Start Ballast, NLO (BF: .85-.95) Prismatic Acrylic Diffuser	2	24	Surface Mounted T8 LED Retrofit Lamp with External Driver LED 4' T8 Lamp (2) 12W Lamps			3640	0.11	0.05	388	173
882	MAIN BUILDING	VESTIBULE CORRIDOR	2	53	2'x4' Troffer Recessed Fluorescent, (2) 48", T-8 lamp, Instant Start Ballast, NLO (BF: .85-.95) Prismatic Acrylic Diffuser	2	24	Recessed T8 LED Retrofit Lamp with External Driver LED 4' T8 Lamp (2) 12W Lamps			8760	0.11	0.05	933	416
883	MAIN BUILDING	3.209 MEDICAL PROCEDURE ROOM	2	80	2'x4' Troffer Recessed Fluorescent, (3) 48", T-8 lamp, Instant Start Ballast, NLO (BF: .85-.95) Prismatic Acrylic Diffuser	2	36	Recessed T8 LED Retrofit Lamp with External Driver LED 4' T8 Lamp (3) 12W Lamps			3640	0.16	0.07	585	259
884	MAIN BUILDING	ATTORNEY INTERVIEW ROOM	2	80	2'x4' Troffer Recessed Fluorescent, (3) 48", T-8 lamp, Instant Start Ballast, NLO (BF: .85-.95) Prismatic Acrylic Diffuser	2	36	Recessed T8 LED Retrofit Lamp with External Driver LED 4' T8 Lamp (3) 12W Lamps			1560	0.16	0.07	251	111
885	MAIN BUILDING	ATTORNEY INTERVIEW ROOM	2	80	2'x4' Troffer Recessed Fluorescent, (3) 48", T-8 lamp, Instant Start Ballast, NLO (BF: .85-.95) Deep Cell Parabolic Diffuser	2	36	Recessed T8 LED Retrofit Lamp with External Driver LED 4' T8 Lamp (3) 12W Lamps			1560	0.16	0.07	251	111
886	MAIN BUILDING	3.330 MEDICAL RECORDS STORAGE	2	53	4' Wraparound Surface Mounted Fluorescent, (2) 48", T-8 lamp, Instant Start Ballast, NLO (BF: .85-.95) Prismatic Acrylic Diffuser	2	24	Surface Mounted T8 LED Retrofit Lamp with External Driver LED 4' T8 Lamp (2) 12W Lamps			520	0.11	0.05	55	25
887	MAIN BUILDING	3.329 JANITOR SUPPLY	1	80	2'x4' Troffer Recessed Flanged Fluorescent, (3) 48", T-8 lamp, Instant Start Ballast, NLO (BF: .85-.95) Prismatic Acrylic Diffuser	1	36	Recessed Flanged T8 LED Retrofit Lamp with External Driver LED 4' T8 Lamp (3) 12W Lamps			1456	0.08	0.04	117	52
888	MAIN BUILDING	RESTRICTED CORRIDOR	2	53	2'x4' Troffer Recessed Fluorescent, (2) 48", T-8 lamp, Instant Start Ballast, NLO (BF: .85-.95) Prismatic Acrylic Diffuser	2	24	Recessed T8 LED Retrofit Lamp with External Driver LED 4' T8 Lamp (2) 12W Lamps			8760	0.11	0.05	933	416
889	MAIN BUILDING	RESTRICTED CORRIDOR	1	19	Universal Face Exit Sign Surface Mounted EXIT Compact Fluorescent, (2) 7W lamp (No Diffuser)	1	9	Surface Mounted Upgrade EXIT Sign LED Light Fixture. (1) 9W			8760	0.02	0.01	166	78
890	MAIN BUILDING	3.702 MEDICAL RECORDS OVERFLOW	3	80	2'x4' Troffer Recessed Flanged Fluorescent, (3) 48", T-8 lamp, Instant Start Ballast, NLO (BF: .85-.95) Prismatic Acrylic Diffuser	3	36	Recessed Flanged T8 LED Retrofit Lamp with External Driver LED 4' T8 Lamp (3) 12W Lamps			1560	0.24	0.11	376	167
891	MAIN BUILDING	3.704 MEDICAL SUPPLY	3	53	2'x4' Troffer Recessed Fluorescent, (2) 48", T-8 lamp, Instant Start Ballast, NLO (BF: .85-.95) Prismatic Acrylic Diffuser	3	24	Recessed T8 LED Retrofit Lamp with External Driver LED 4' T8 Lamp (2) 12W Lamps			3640	0.16	0.07	581	259
892	MAIN BUILDING	3.706 WASTE DISPOSAL	1	53	4' Wraparound Surface Mounted Fluorescent, (2) 48", T-8 lamp, Instant Start Ballast, NLO (BF: .85-.95) Prismatic Acrylic Diffuser	1	24	Surface Mounted T8 LED Retrofit Lamp with External Driver LED 4' T8 Lamp (2) 12W Lamps			520	0.05	0.02	28	12
893	MAIN BUILDING	3.705 INFECTIOUS WASTE	1	53	4' Wraparound Surface Mounted Fluorescent, (2) 48", T-8 lamp, Instant Start Ballast, NLO (BF: .85-.95) Prismatic Acrylic Diffuser	1	24	Surface Mounted T8 LED Retrofit Lamp with External Driver LED 4' T8 Lamp (2) 12W Lamps			520	0.05	0.02	28	12
894	MAIN BUILDING	3.401 PHARMACY	2	53	2'x4' Troffer Recessed Fluorescent, (2) 48", T-8 lamp, Instant Start Ballast, NLO (BF: .85-.95) Prismatic Acrylic Diffuser	2	24	Recessed T8 LED Retrofit Lamp with External Driver LED 4' T8 Lamp (2) 12W Lamps			1560	0.11	0.05	166	74
895	MAIN BUILDING	INFIRMARY CORRIDOR	13	53	2'x4' Troffer Recessed Fluorescent, (2) 48", T-8 lamp, Instant Start Ballast, NLO (BF: .85-.95) Prismatic Acrylic Diffuser	13	24	Recessed T8 LED Retrofit Lamp with External Driver LED 4' T8 Lamp (2) 12W Lamps			8760	0.69	0.31	6,064	2,706
896	MAIN BUILDING	INFIRMARY CORRIDOR	2	80	2'x4' Troffer Recessed Fluorescent, (3) 48", T-8 lamp, Instant Start Ballast, NLO (BF: .85-.95) Prismatic Acrylic Diffuser	2	36	Recessed T8 LED Retrofit Lamp with External Driver LED 4' T8 Lamp (3) 12W Lamps			8760	0.16	0.07	1,407	624
897	MAIN BUILDING	SECURITY BUBBLE	2	80	2'x4' Troffer Recessed Flanged Fluorescent, (3) 48", T-8 lamp, Instant Start Ballast, NLO (BF: .85-.95) Deep Cell Parabolic Diffuser	2	36	Recessed Flanged T8 LED Retrofit Lamp with External Driver LED 4' T8 Lamp (3) 12W Lamps			3640	0.16	0.07	585	259
898	MAIN BUILDING	ISOLATION CELLS 1-4	4	80	4' Wraparound; Tamper-proof Surface Mounted Fluorescent, (3) 48", T-8 lamp, Instant Start Ballast, NLO (BF: .85-.95) Prismatic Acrylic Diffuser	4	36	Surface Mounted T8 LED Retrofit Lamp with External Driver LED 4' T8 Lamp (3) 12W Lamps			2912	0.32	0.14	936	415
899	MAIN BUILDING	3.703 SHOWER ROOM	1	53	4' Wraparound; Tamper-proof Wall Mounted Fluorescent, (2) 48", T-8 lamp, Instant Start Ballast, NLO (BF: .85-.95) Prismatic Acrylic Diffuser	1	24	Wall Mounted T8 LED Retrofit Lamp with External Driver LED 4' T8 Lamp (2) 12W Lamps			2912	0.05	0.02	155	69

Line #	Facility Area	Space	Pre Fixture Qty	Pre Watts/ Fixt	Pre Description	Post Fixture Qty	Post Watt/ Fixt	Post Description	Wallswitch Sensor	Ceiling Sensor	Hours of Operation	Base kW	Proposed kW	Base kWh	Proposed kWh
900	MAIN BUILDING	STORAGE ROOM	1	53	4' Wraparound Surface Mounted Fluorescent, (2) 48", T-8 lamp, Instant Start Ballast, NLO (BF: .85-.95) Prismatic Acrylic Diffuser	1	24	Surface Mounted T8 LED Retrofit Lamp with External Driver LED 4' T8 Lamp (2) 12W Lamps			520	0.05	0.02	28	12
901	MAIN BUILDING	ISOLATION CELL 8 ENTRY	1	53	4' Wraparound; Tamper-proof Surface Mounted Fluorescent, (2) 48", T-8 lamp, Instant Start Ballast, NLO (BF: .85-.95) Prismatic Acrylic Diffuser	1	24	Surface Mounted T8 LED Retrofit Lamp with External Driver LED 4' T8 Lamp (2) 12W Lamps			8760	0.05	0.02	466	208
902	MAIN BUILDING	ISOLATION CELL 8	2	101	4' Wraparound; Tamper-proof Surface Mounted Fluorescent, (4) 48", T-8 lamp, Instant Start Ballast, NLO (BF: .85-.95) Prismatic Acrylic Diffuser	2	48	Surface Mounted T8 LED Retrofit Lamp with External Driver LED 4' T8 Lamp (4) 12W Lamps			2912	0.20	0.10	589	277
903	MAIN BUILDING	3.319 ELECTRICAL CLOSET	1	53	4' Wraparound Surface Mounted Fluorescent, (2) 48", T-8 lamp, Instant Start Ballast, NLO (BF: .85-.95) Prismatic Acrylic Diffuser	1	24	Surface Mounted T8 LED Retrofit Lamp with External Driver LED 4' T8 Lamp (2) 12W Lamps			520	0.05	0.02	28	12
904	MAIN BUILDING	ISOLATION CELL 7 ENTRY	1	53	4' Wraparound; Tamper-proof Surface Mounted Fluorescent, (2) 48", T-8 lamp, Instant Start Ballast, NLO (BF: .85-.95) Prismatic Acrylic Diffuser	1	24	Surface Mounted T8 LED Retrofit Lamp with External Driver LED 4' T8 Lamp (2) 12W Lamps			8760	0.05	0.02	466	208
905	MAIN BUILDING	ISOLATION CELL 7	2	101	4' Wraparound; Tamper-proof Surface Mounted Fluorescent, (4) 48", T-8 lamp, Instant Start Ballast, NLO (BF: .85-.95) Prismatic Acrylic Diffuser	2	48	Surface Mounted T8 LED Retrofit Lamp with External Driver LED 4' T8 Lamp (4) 12W Lamps			2912	0.20	0.10	589	277
906	MAIN BUILDING	NURSES STATION	7	80	2'x4' Troffer Recessed Fluorescent, (3) 48", T-8 lamp, Instant Start Ballast, NLO (BF: .85-.95) Prismatic Acrylic Diffuser	7	36	Recessed T8 LED Retrofit Lamp with External Driver LED 4' T8 Lamp (3) 12W Lamps			3640	0.56	0.25	2,047	908
907	MAIN BUILDING	3.304 STAFF MENS RESTROOM	1	53	4' Wraparound Surface Mounted Fluorescent, (2) 48", T-8 lamp, Instant Start Ballast, NLO (BF: .85-.95) Prismatic Acrylic Diffuser	1	24	Surface Mounted T8 LED Retrofit Lamp with External Driver LED 4' T8 Lamp (2) 12W Lamps	1		1092	0.05	0.02	78	35
908	MAIN BUILDING	3.303 STAFF WOMENS RESTROOM	1	53	4' Wraparound Surface Mounted Fluorescent, (2) 48", T-8 lamp, Instant Start Ballast, NLO (BF: .85-.95) Prismatic Acrylic Diffuser	1	24	Surface Mounted T8 LED Retrofit Lamp with External Driver LED 4' T8 Lamp (2) 12W Lamps	1		1092	0.05	0.02	78	35
909	MAIN BUILDING	3.217 NURSE PREP ROOM	2	80	2'x4' Troffer Recessed Flanged Fluorescent, (3) 48", T-8 lamp, Instant Start Ballast, NLO (BF: .85-.95) Prismatic Acrylic Diffuser	2	36	Recessed Flanged T8 LED Retrofit Lamp with External Driver LED 4' T8 Lamp (3) 12W Lamps			3640	0.16	0.07	585	259
910	MAIN BUILDING	ISOLATION CELL 6	2	101	4' Wraparound; Tamper-proof Surface Mounted Fluorescent, (4) 48", T-8 lamp, Instant Start Ballast, NLO (BF: .85-.95) Prismatic Acrylic Diffuser	2	48	Surface Mounted T8 LED Retrofit Lamp with External Driver LED 4' T8 Lamp (4) 12W Lamps			2912	0.20	0.10	589	277
911	MAIN BUILDING	TV LOUNGE AREA	9	53	4' Vanity Wall Mounted Fluorescent, (2) 48", T-8 lamp, Instant Start Ballast, NLO (BF: .85-.95) Deep Cell Parabolic Diffuser	9	24	Wall Mounted T8 LED Retrofit Lamp with External Driver LED 4' T8 Lamp (2) 12W Lamps			8760	0.48	0.21	4,198	1,873
912	MAIN BUILDING	ISOLATION CELL 5	2	101	4' Wraparound; Tamper-proof Surface Mounted Fluorescent, (4) 48", T-8 lamp, Instant Start Ballast, NLO (BF: .85-.95) Prismatic Acrylic Diffuser	2	48	Surface Mounted T8 LED Retrofit Lamp with External Driver LED 4' T8 Lamp (4) 12W Lamps			2912	0.20	0.10	589	277
913	MAIN BUILDING	ISOLATION CELL 4	2	101	4' Wraparound; Tamper-proof Surface Mounted Fluorescent, (4) 48", T-8 lamp, Instant Start Ballast, NLO (BF: .85-.95) Prismatic Acrylic Diffuser	2	48	Surface Mounted T8 LED Retrofit Lamp with External Driver LED 4' T8 Lamp (4) 12W Lamps			2912	0.20	0.10	589	277
914	MAIN BUILDING	ISOLATION CELL 3	2	101	4' Wraparound; Tamper-proof Surface Mounted Fluorescent, (4) 48", T-8 lamp, Instant Start Ballast, NLO (BF: .85-.95) Prismatic Acrylic Diffuser	2	48	Surface Mounted T8 LED Retrofit Lamp with External Driver LED 4' T8 Lamp (4) 12W Lamps			2912	0.20	0.10	589	277
915	MAIN BUILDING	ISOLATION CELL 2	2	101	4' Wraparound; Tamper-proof Surface Mounted Fluorescent, (4) 48", T-8 lamp, Instant Start Ballast, NLO (BF: .85-.95) Prismatic Acrylic Diffuser	2	48	Surface Mounted T8 LED Retrofit Lamp with External Driver LED 4' T8 Lamp (4) 12W Lamps			2912	0.20	0.10	589	277
916	MAIN BUILDING	ISOLATION CELL 1	2	101	4' Wraparound; Tamper-proof Surface Mounted Fluorescent, (4) 48", T-8 lamp, Instant Start Ballast, NLO (BF: .85-.95) Prismatic Acrylic Diffuser	2	48	Surface Mounted T8 LED Retrofit Lamp with External Driver LED 4' T8 Lamp (4) 12W Lamps			2912	0.20	0.10	589	277
917	MAIN BUILDING	3.302 KITCHENETTE	2	53	4' Wraparound; Tamper-proof Surface Mounted Fluorescent, (2) 48", T-8 lamp, Instant Start Ballast, NLO (BF: .85-.95) Prismatic Acrylic Diffuser	2	24	Surface Mounted T8 LED Retrofit Lamp with External Driver LED 4' T8 Lamp (2) 12W Lamps			3640	0.11	0.05	388	173
918	MAIN BUILDING	3.307 TUB ROOM	1	101	4' Wraparound; Tamper-proof Surface Mounted Fluorescent, (4) 48", T-8 lamp, Instant Start Ballast, NLO (BF: .85-.95) Prismatic Acrylic Diffuser	1	48	Surface Mounted T8 LED Retrofit Lamp with External Driver LED 4' T8 Lamp (4) 12W Lamps			1560	0.10	0.05	158	74
919	MAIN BUILDING	INMATE PROPERTY	1	101	4' Wraparound; Tamper-proof Surface Mounted Fluorescent, (4) 48", T-8 lamp, Instant Start Ballast, NLO (BF: .85-.95) Prismatic Acrylic Diffuser	1	48	Surface Mounted T8 LED Retrofit Lamp with External Driver LED 4' T8 Lamp (4) 12W Lamps			3640	0.10	0.05	368	173
920	MAIN BUILDING	3.309 INMATE RESTROOM	1	53	4' Wraparound; Tamper-proof Surface Mounted Fluorescent, (2) 48", T-8 lamp, Instant Start Ballast, NLO (BF: .85-.95) Prismatic Acrylic Diffuser	1	24	Surface Mounted T8 LED Retrofit Lamp with External Driver LED 4' T8 Lamp (2) 12W Lamps	1		1092	0.05	0.02	78	35
921	MAIN BUILDING	R&D RHU CORRIDOR	5	53	2'x4' Troffer Recessed Fluorescent, (2) 48", T-8 lamp, Instant Start Ballast, NLO (BF: .85-.95) Prismatic Acrylic Diffuser	5	24	Recessed T8 LED Retrofit Lamp with External Driver LED 4' T8 Lamp (2) 12W Lamps			8760	0.27	0.12	2,332	1,041
922	MAIN BUILDING	R&D RHU CORRIDOR	1	19	Universal Face Exit Sign Surface Mounted EXIT Compact Fluorescent, (2) 7W lamp (No Diffuser)	1	9	Surface Mounted Upgrade EXIT Sign LED Light Fixture. (1) 9W			8760	0.02	0.01	166	78
923	MAIN BUILDING	R&D OPEN AREA	17	80	2'x4' Troffer Recessed Fluorescent, (3) 48", T-8 lamp, Instant Start Ballast, NLO (BF: .85-.95) Prismatic Acrylic Diffuser	17	36	Recessed T8 LED Retrofit Lamp with External Driver LED 4' T8 Lamp (3) 12W Lamps			8760	1.37	0.61	11,962	5,308
924	MAIN BUILDING	R&D OPEN AREA	1	19	Universal Face Exit Sign Surface Mounted EXIT Compact Fluorescent, (2) 7W lamp (No Diffuser)	1	9	Surface Mounted Upgrade EXIT Sign LED Light Fixture. (1) 9W			8760	0.02	0.01	166	78
925	MAIN BUILDING	2.302 GROUP HOLDING CELL	2	80	4' Wraparound; Tamper-proof Surface Mounted Fluorescent, (3) 48", T-8 lamp, Instant Start Ballast, NLO (BF: .85-.95) Prismatic Acrylic Diffuser	2	36	Surface Mounted T8 LED Retrofit Lamp with External Driver LED 4' T8 Lamp (3) 12W Lamps			2912	0.16	0.07	468	208
926	MAIN BUILDING	2.304 INMATE HEARING ROOM	2	80	4' Wraparound; Tamper-proof Surface Mounted Fluorescent, (3) 48", T-8 lamp, Instant Start Ballast, NLO (BF: .85-.95) Prismatic Acrylic Diffuser	2	36	Surface Mounted T8 LED Retrofit Lamp with External Driver LED 4' T8 Lamp (3) 12W Lamps			1560	0.16	0.07	251	111
927	MAIN BUILDING	2.305 HOLDING CELL 3	1	80	4' Wraparound; Tamper-proof Surface Mounted Fluorescent, (3) 48", T-8 lamp, Instant Start Ballast, NLO (BF: .85-.95) Prismatic Acrylic Diffuser	1	36	Surface Mounted T8 LED Retrofit Lamp with External Driver LED 4' T8 Lamp (3) 12W Lamps			2912	0.08	0.04	234	104
928	MAIN BUILDING	2.306 HOLDING CELL 4	1	80	4' Wraparound; Tamper-proof Surface Mounted Fluorescent, (3) 48", T-8 lamp, Instant Start Ballast, NLO (BF: .85-.95) Prismatic Acrylic Diffuser	1	36	Surface Mounted T8 LED Retrofit Lamp with External Driver LED 4' T8 Lamp (3) 12W Lamps			2912	0.08	0.04	234	104
929	MAIN BUILDING	HOLDING CELL 5	1	80	4' Wraparound; Tamper-proof Surface Mounted Fluorescent, (3) 48", T-8 lamp, Instant Start Ballast, NLO (BF: .85-.95) Prismatic Acrylic Diffuser	1	36	Surface Mounted T8 LED Retrofit Lamp with External Driver LED 4' T8 Lamp (3) 12W Lamps			2912	0.08	0.04	234	104

Line #	Facility Area	Space	Pre Fixture Qty	Pre Watts/ Fixt	Pre Description	Post Fixture Qty	Post Watt/ Fixt	Post Description	Wallswitch Sensor	Ceiling Sensor	Hours of Operation	Base kW	Proposed kW	Base kWh	Proposed kWh
930	MAIN BUILDING	HOLDING CELL 6	1	80	4' Wraparound; Tamper-proof Surface Mounted Fluorescent, (3) 48", T-8 lamp, Instant Start Ballast, NLO (BF: .85-.95) Prismatic Acrylic Diffuser	1	36	Surface Mounted T8 LED Retrofit Lamp with External Driver LED 4' T8 Lamp (3) 12W Lamps			2912	0.08	0.04	234	104
931	MAIN BUILDING	FINGERPRINTING	2	80	2'x4' Troffer Recessed Fluorescent, (3) 48", T-8 lamp, Instant Start Ballast, NLO (BF: .85-.95) Prismatic Acrylic Diffuser	2	36	Recessed T8 LED Retrofit Lamp with External Driver LED 4' T8 Lamp (3) 12W Lamps			3640	0.16	0.07	585	259
932	MAIN BUILDING	FINGERPRINTING	1	80	2'x4' Troffer Surface Mounted Fluorescent, (3) 48", T-8 lamp, Instant Start Ballast, NLO (BF: .85-.95) Prismatic Acrylic Diffuser	1	36	Surface Mounted T8 LED Retrofit Lamp with External Driver LED 4' T8 Lamp (3) 12W Lamps			3640	0.08	0.04	292	130
933	MAIN BUILDING	2.310 OFFICE	2	80	2'x4' Troffer Recessed Fluorescent, (3) 48", T-8 lamp, Instant Start Ballast, NLO (BF: .85-.95) Prismatic Acrylic Diffuser	2	36	Recessed T8 LED Retrofit Lamp with External Driver LED 4' T8 Lamp (3) 12W Lamps	1		2730	0.16	0.07	585	259
934	MAIN BUILDING	2.311 OFFICE	2	80	2'x4' Troffer Recessed Fluorescent, (3) 48", T-8 lamp, Instant Start Ballast, NLO (BF: .85-.95) Prismatic Acrylic Diffuser	2	36	Recessed T8 LED Retrofit Lamp with External Driver LED 4' T8 Lamp (3) 12W Lamps	1		2730	0.16	0.07	585	259
935	MAIN BUILDING	2.312 INMATE RESTROOM	1	53	4' Wraparound Surface Mounted Fluorescent, (2) 48", T-8 lamp, Instant Start Ballast, NLO (BF: .85-.95) Prismatic Acrylic Diffuser	1	24	Surface Mounted T8 LED Retrofit Lamp with External Driver LED 4' T8 Lamp (2) 12W Lamps	1		1092	0.05	0.02	78	35
936	MAIN BUILDING	2.313 STAFF RESTROOM	1	53	4' Wraparound Surface Mounted Fluorescent, (2) 48", T-8 lamp, Instant Start Ballast, NLO (BF: .85-.95) Prismatic Acrylic Diffuser	1	24	Surface Mounted T8 LED Retrofit Lamp with External Driver LED 4' T8 Lamp (2) 12W Lamps	1		1092	0.05	0.02	78	35
937	MAIN BUILDING	R&D STORAGE WAREHOUSE	16	53	4' Wraparound Chain Mounted Fluorescent, (2) 48", T-8 lamp, Instant Start Ballast, NLO (BF: .85-.95) Prismatic Acrylic Diffuser	16	24	Chain Mounted T8 LED Retrofit Lamp with External Driver LED 4' T8 Lamp (2) 12W Lamps			8760	0.85	0.38	7,463	3,330
938	MAIN BUILDING	JANITOR CLOSET	1	53	4' Wraparound Surface Mounted Fluorescent, (2) 48", T-8 lamp, Instant Start Ballast, NLO (BF: .85-.95) Prismatic Acrylic Diffuser	1	24	Surface Mounted T8 LED Retrofit Lamp with External Driver LED 4' T8 Lamp (2) 12W Lamps			1456	0.05	0.02	78	35
939	MAIN BUILDING	2.316 INMATE SHOWER	1	53	4' Wraparound Surface Mounted Fluorescent, (2) 48", T-8 lamp, Instant Start Ballast, NLO (BF: .85-.95) Prismatic Acrylic Diffuser	1	24	Surface Mounted T8 LED Retrofit Lamp with External Driver LED 4' T8 Lamp (2) 12W Lamps			2912	0.05	0.02	155	69
940	MAIN BUILDING	IRC WORKROOM	2	80	2'x4' Troffer Recessed Fluorescent, (3) 48", T-8 lamp, Instant Start Ballast, NLO (BF: .85-.95) Prismatic Acrylic Diffuser	2	36	Recessed T8 LED Retrofit Lamp with External Driver LED 4' T8 Lamp (3) 12W Lamps			3640	0.16	0.07	585	259
941	MAIN BUILDING	MEDICAL DEPT VESTIBULE	2	80	2'x4' Troffer Recessed Fluorescent, (3) 48", T-8 lamp, Instant Start Ballast, NLO (BF: .85-.95) Prismatic Acrylic Diffuser	2	36	Recessed T8 LED Retrofit Lamp with External Driver LED 4' T8 Lamp (3) 12W Lamps			8760	0.16	0.07	1,407	624
942	MAIN BUILDING	R&D RHU VESTIBULE	2	80	2'x4' Troffer Recessed Fluorescent, (3) 48", T-8 lamp, Instant Start Ballast, NLO (BF: .85-.95) Prismatic Acrylic Diffuser	2	36	Recessed T8 LED Retrofit Lamp with External Driver LED 4' T8 Lamp (3) 12W Lamps			8760	0.16	0.07	1,407	624
943	MAIN BUILDING	R&D RHU VESTIBULE	1	3	Universal Face Exit Sign Surface Mounted EXIT Light Emitting Diode, (1) 3W lamp, Single Sided (No Diffuser)	1	3	Existing luminaire to remain as is No Retrofit. To remain as is.			8760	0.00	0.00	25	25
944	MAIN BUILDING	INMATE VISIT PROCESSING	16	80	2'x4' Troffer Recessed Fluorescent, (3) 48", T-8 lamp, Instant Start Ballast, NLO (BF: .85-.95) Prismatic Acrylic Diffuser	16	36	Recessed T8 LED Retrofit Lamp with External Driver LED 4' T8 Lamp (3) 12W Lamps			3640	1.29	0.57	4,678	2,076
945	MAIN BUILDING	INMATE VISIT PROCESSING	1	53	4' Wraparound Surface Mounted Fluorescent, (2) 48", T-8 lamp, Instant Start Ballast, NLO (BF: .85-.95) Prismatic Acrylic Diffuser	1	24	Surface Mounted T8 LED Retrofit Lamp with External Driver LED 4' T8 Lamp (2) 12W Lamps			3640	0.05	0.02	194	86
946	MAIN BUILDING	INMATE VISIT PROCESSING	2	19	Universal Face Exit Sign Surface Mounted EXIT Compact Fluorescent, (2) 7W lamp (No Diffuser)	2	9	Surface Mounted Upgrade EXIT Sign LED Light Fixture. (1) 9W			8760	0.04	0.02	332	156
947	MAIN BUILDING	2.5 SEARCH ROOM	2	53	4' Wraparound Surface Mounted Fluorescent, (2) 48", T-8 lamp, Instant Start Ballast, NLO (BF: .85-.95) Prismatic Acrylic Diffuser	2	24	Surface Mounted T8 LED Retrofit Lamp with External Driver LED 4' T8 Lamp (2) 12W Lamps			3640	0.11	0.05	388	173
948	MAIN BUILDING	SECURITY OFFICE	3	80	2'x4' Troffer Recessed Fluorescent, (3) 48", T-8 lamp, Instant Start Ballast, NLO (BF: .85-.95) Prismatic Acrylic Diffuser	3	36	Recessed T8 LED Retrofit Lamp with External Driver LED 4' T8 Lamp (3) 12W Lamps	1		2730	0.24	0.11	877	389
949	MAIN BUILDING	SECURITY OFFICE	5	80	2'x4' Troffer Recessed Fluorescent, (3) 48", T-8 lamp, Instant Start Ballast, NLO (BF: .85-.95) Prismatic Acrylic Diffuser	5	36	Recessed T8 LED Retrofit Lamp with External Driver LED 4' T8 Lamp (3) 12W Lamps		1	2730	0.40	0.18	1,462	649
950	MAIN BUILDING	SECURITY OFFICE	7	80	2'x4' Troffer Recessed Fluorescent, (3) 48", T-8 lamp, Instant Start Ballast, NLO (BF: .85-.95) Prismatic Acrylic Diffuser	7	36	Recessed T8 LED Retrofit Lamp with External Driver LED 4' T8 Lamp (3) 12W Lamps		1	2730	0.56	0.25	2,047	908
951	MAIN BUILDING	2.10 EVIDENCE ROOM	2	53	4' Wraparound Surface Mounted Fluorescent, (2) 48", T-8 lamp, Instant Start Ballast, NLO (BF: .85-.95) Prismatic Acrylic Diffuser	2	24	Surface Mounted T8 LED Retrofit Lamp with External Driver LED 4' T8 Lamp (2) 12W Lamps			520	0.11	0.05	55	25
952	MAIN BUILDING	2.521 PAROLE HEARING ROOM	6	80	2'x4' Troffer Recessed Fluorescent, (3) 48", T-8 lamp, Instant Start Ballast, NLO (BF: .85-.95) Prismatic Acrylic Diffuser	6	36	Recessed T8 LED Retrofit Lamp with External Driver LED 4' T8 Lamp (3) 12W Lamps			1560	0.48	0.21	752	334
953	MAIN BUILDING	NON CONTACT VISITING ROOM 1	1	53	4' Wraparound Surface Mounted Fluorescent, (2) 48", T-8 lamp, Instant Start Ballast, NLO (BF: .85-.95) Prismatic Acrylic Diffuser	1	24	Surface Mounted T8 LED Retrofit Lamp with External Driver LED 4' T8 Lamp (2) 12W Lamps			1560	0.05	0.02	83	37
954	MAIN BUILDING	NON CONTACT VISITING ROOM 2	1	53	4' Wraparound Surface Mounted Fluorescent, (2) 48", T-8 lamp, Instant Start Ballast, NLO (BF: .85-.95) Prismatic Acrylic Diffuser	1	24	Surface Mounted T8 LED Retrofit Lamp with External Driver LED 4' T8 Lamp (2) 12W Lamps			1560	0.05	0.02	83	37
955	MAIN BUILDING	2.504 OFFICIAL VISIT	2	80	2'x4' Troffer Recessed Fluorescent, (3) 48", T-8 lamp, Instant Start Ballast, NLO (BF: .85-.95) Prismatic Acrylic Diffuser	2	36	Recessed T8 LED Retrofit Lamp with External Driver LED 4' T8 Lamp (3) 12W Lamps			3640	0.16	0.07	585	259
956	MAIN BUILDING	2.504 OFFICIAL VISIT	3	80	2'x4' Troffer Recessed Fluorescent, (3) 48", T-8 lamp, Instant Start Ballast, NLO (BF: .85-.95) Prismatic Acrylic Diffuser	3	36	Recessed T8 LED Retrofit Lamp with External Driver LED 4' T8 Lamp (3) 12W Lamps			3640	0.24	0.11	877	389
957	MAIN BUILDING	2.519 SECURITY PANEL ROOM	1	53	4' Wraparound Surface Mounted Fluorescent, (2) 48", T-8 lamp, Instant Start Ballast, NLO (BF: .85-.95) Prismatic Acrylic Diffuser	1	24	Surface Mounted T8 LED Retrofit Lamp with External Driver LED 4' T8 Lamp (2) 12W Lamps			520	0.05	0.02	28	12
958	MAIN BUILDING	OPEN VISITATION ROOM	54	53	2'x4' Troffer Recessed Fluorescent, (2) 48", T-8 lamp, Instant Start Ballast, NLO (BF: .85-.95) Prismatic Acrylic Diffuser	54	24	Recessed T8 LED Retrofit Lamp with External Driver LED 4' T8 Lamp (2) 12W Lamps			8760	2.88	1.28	25,188	11,239
959	MAIN BUILDING	OPEN VISITATION ROOM	4	80	2'x4' Troffer Recessed Fluorescent, (3) 48", T-8 lamp, Instant Start Ballast, NLO (BF: .85-.95) Prismatic Acrylic Diffuser	4	36	Recessed T8 LED Retrofit Lamp with External Driver LED 4' T8 Lamp (3) 12W Lamps			8760	0.32	0.14	2,815	1,249

Line #	Facility Area	Space	Pre Fixture Qty	Pre Watts/ Fixt	Pre Description	Post Fixture Qty	Post Watt/ Fixt	Post Description	Wallswitch Sensor	Ceiling Sensor	Hours of Operation	Base kW	Proposed kW	Base kWh	Proposed kWh
960	MAIN BUILDING	OPEN VISITATION ROOM	2	19	Universal Face Exit Sign Surface Mounted EXIT Compact Fluorescent, (2) 7W lamp (No Diffuser)	2	9	Surface Mounted Upgrade EXIT Sign LED Light Fixture. (1) 9W			8760	0.04	0.02	332	156
961	MAIN BUILDING	CHILDRENS VISIT ROOM	8	80	2'x4' Troffer Recessed Fluorescent, (3) 48", T-8 lamp, Instant Start Ballast, NLO (BF: .85-.95) Prismatic Acrylic Diffuser	8	36	Recessed T8 LED Retrofit Lamp with External Driver LED 4' T8 Lamp (3) 12W Lamps			8760	0.64	0.29	5,629	2,498
962	MAIN BUILDING	NON CONTACT 1 (VISITOR SIDE)	1	53	4' Wraparound Surface Mounted Fluorescent, (2) 48", T-8 lamp, Instant Start Ballast, NLO (BF: .85-.95) Prismatic Acrylic Diffuser	1	24	Surface Mounted T8 LED Retrofit Lamp with External Driver LED 4' T8 Lamp (2) 12W Lamps			1560	0.05	0.02	83	37
963	MAIN BUILDING	NON CONTACT 2 (VISITOR SIDE)	1	53	4' Wraparound Surface Mounted Fluorescent, (2) 48", T-8 lamp, Instant Start Ballast, NLO (BF: .85-.95) Prismatic Acrylic Diffuser	1	24	Surface Mounted T8 LED Retrofit Lamp with External Driver LED 4' T8 Lamp (2) 12W Lamps			1560	0.05	0.02	83	37
964	MAIN BUILDING	STAFF RESTROOM	1	53	4' Wraparound Surface Mounted Fluorescent, (2) 48", T-8 lamp, Instant Start Ballast, NLO (BF: .85-.95) Prismatic Acrylic Diffuser	1	24	Surface Mounted T8 LED Retrofit Lamp with External Driver LED 4' T8 Lamp (2) 12W Lamps	1		1092	0.05	0.02	78	35
965	MAIN BUILDING	VISIT CONFERENCE ROOM	2	53	2'x4' Troffer Recessed Fluorescent, (2) 48", T-8 lamp, Instant Start Ballast, NLO (BF: .85-.95) Prismatic Acrylic Diffuser	2	24	Recessed T8 LED Retrofit Lamp with External Driver LED 4' T8 Lamp (2) 12W Lamps			1560	0.11	0.05	166	74
966	MAIN BUILDING	2.514 VISIT MENS RESTROOM	1	53	4' Wraparound Surface Mounted Fluorescent, (2) 48", T-8 lamp, Instant Start Ballast, NLO (BF: .85-.95) Prismatic Acrylic Diffuser	1	24	Surface Mounted T8 LED Retrofit Lamp with External Driver LED 4' T8 Lamp (2) 12W Lamps	1		1092	0.05	0.02	78	35
967	MAIN BUILDING	2.512 VISIT WOMENS RESTROOM	1	53	4' Wraparound Surface Mounted Fluorescent, (2) 48", T-8 lamp, Instant Start Ballast, NLO (BF: .85-.95) Prismatic Acrylic Diffuser	1	24	Surface Mounted T8 LED Retrofit Lamp with External Driver LED 4' T8 Lamp (2) 12W Lamps	1		1092	0.05	0.02	78	35
968	MAIN BUILDING	2.204 CONTROL VESTIBULE	1	80	2'x4' Troffer Recessed Flanged Fluorescent, (3) 48", T-8 lamp, Instant Start Ballast, NLO (BF: .85-.95) Prismatic Acrylic Diffuser	1	36	Recessed Flanged T8 LED Retrofit Lamp with External Driver LED 4' T8 Lamp (3) 12W Lamps			8760	0.08	0.04	704	312
969	MAIN BUILDING	2.205 CONTROL ROOM	11	80	2'x4' Troffer Recessed Fluorescent, (3) 48", T-8 lamp, Instant Start Ballast, NLO (BF: .85-.95) Deep Cell Parabolic Diffuser	11	36	Recessed T8 LED Retrofit Lamp with External Driver LED 4' T8 Lamp (3) 12W Lamps			520	0.88	0.39	459	204
970	MAIN BUILDING	SHIFT COMMANDER OFFICE	2	80	2'x4' Troffer Recessed Fluorescent, (3) 48", T-8 lamp, Instant Start Ballast, NLO (BF: .85-.95) Deep Cell Parabolic Diffuser	2	36	Recessed T8 LED Retrofit Lamp with External Driver LED 4' T8 Lamp (3) 12W Lamps	1		2730	0.16	0.07	585	259
971	MAIN BUILDING	DATA CLOSET	1	53	4' Wraparound Surface Mounted Fluorescent, (2) 48", T-8 lamp, Instant Start Ballast, NLO (BF: .85-.95) Prismatic Acrylic Diffuser	1	24	Surface Mounted T8 LED Retrofit Lamp with External Driver LED 4' T8 Lamp (2) 12W Lamps			520	0.05	0.02	28	12
972	MAIN BUILDING	CONTROL RESTROOM	1	53	4' Wraparound Surface Mounted Fluorescent, (2) 48", T-8 lamp, Instant Start Ballast, NLO (BF: .85-.95) Prismatic Acrylic Diffuser	1	24	Surface Mounted T8 LED Retrofit Lamp with External Driver LED 4' T8 Lamp (2) 12W Lamps	1		1092	0.05	0.02	78	35
973	MAIN BUILDING	DATA CLOSET	1	53	4' Wraparound Surface Mounted Fluorescent, (2) 48", T-8 lamp, Instant Start Ballast, NLO (BF: .85-.95) Prismatic Acrylic Diffuser	1	24	Surface Mounted T8 LED Retrofit Lamp with External Driver LED 4' T8 Lamp (2) 12W Lamps			520	0.05	0.02	28	12
974	ADMINISTRATION BUILDING	MAIN BREEZEWAY CORRIDOR	21	53	2'x4' Troffer Recessed Fluorescent, (2) 48", T-8 lamp, Instant Start Ballast, NLO (BF: .85-.95) Prismatic Acrylic Diffuser	21	24	Recessed T8 LED Retrofit Lamp with External Driver LED 4' T8 Lamp (2) 12W Lamps			8760	1.12	0.50	9,795	4,371
975	ADMINISTRATION BUILDING	MAIN BREEZEWAY CORRIDOR	1	3	Universal Face Exit Sign Surface Mounted EXIT Light Emitting Diode, (1) 3W lamp, Single Sided (No Diffuser)	1	3	Existing luminaire to remain as is No Retrofit. To remain as is.			8760	0.00	0.00	25	25
976	ADMINISTRATION BUILDING	PROCESS OPEN AREA	8	80	2'x4' Troffer Recessed Fluorescent, (3) 48", T-8 lamp, Instant Start Ballast, NLO (BF: .85-.95) Prismatic Acrylic Diffuser	8	36	Recessed T8 LED Retrofit Lamp with External Driver LED 4' T8 Lamp (3) 12W Lamps			8760	0.64	0.29	5,629	2,498
977	ADMINISTRATION BUILDING	1.07 JANITOR CLOSET	1	53	4' Wraparound Surface Mounted Fluorescent, (2) 48", T-8 lamp, Instant Start Ballast, NLO (BF: .85-.95) Prismatic Acrylic Diffuser	1	24	Surface Mounted T8 LED Retrofit Lamp with External Driver LED 4' T8 Lamp (2) 12W Lamps			1456	0.05	0.02	78	35
978	ADMINISTRATION BUILDING	STAFF RESTROOM	1	53	4' Wraparound Surface Mounted Fluorescent, (2) 48", T-8 lamp, Instant Start Ballast, NLO (BF: .85-.95) Prismatic Acrylic Diffuser	1	24	Surface Mounted T8 LED Retrofit Lamp with External Driver LED 4' T8 Lamp (2) 12W Lamps	1		1092	0.05	0.02	78	35
979	ADMINISTRATION BUILDING	ADMIN MAIN CORRIDOR	11	53	2'x4' Troffer Recessed Fluorescent, (2) 48", T-8 lamp, Instant Start Ballast, NLO (BF: .85-.95) Prismatic Acrylic Diffuser	11	24	Recessed T8 LED Retrofit Lamp with External Driver LED 4' T8 Lamp (2) 12W Lamps			8760	0.59	0.26	5,131	2,290
980	ADMINISTRATION BUILDING	ADMIN MAIN CORRIDOR	3	19	Universal Face Exit Sign Surface Mounted EXIT Compact Fluorescent, (2) 7W lamp Prismatic Acrylic Diffuser	3	9	Surface Mounted Upgrade EXIT Sign LED Light Fixture. (1) 9W			8760	0.06	0.03	498	234
981	ADMINISTRATION BUILDING	1.413 ARMORY / LOCKSMITH OFFICES	8	53	2'x4' Troffer Recessed Fluorescent, (2) 48", T-8 lamp, Instant Start Ballast, NLO (BF: .85-.95) Prismatic Acrylic Diffuser	8	24	Recessed T8 LED Retrofit Lamp with External Driver LED 4' T8 Lamp (2) 12W Lamps		1	2730	0.43	0.19	1,551	692
982	ADMINISTRATION BUILDING	1.411 STAFF WEIGHT ROOM	8	80	2'x4' Troffer Recessed Fluorescent, (3) 48", T-8 lamp, Instant Start Ballast, NLO (BF: .85-.95) Prismatic Acrylic Diffuser	8	36	Recessed T8 LED Retrofit Lamp with External Driver LED 4' T8 Lamp (3) 12W Lamps			3640	0.64	0.29	2,339	1,038
983	ADMINISTRATION BUILDING	1.410 WOMENS LOCKER ROOM	1	80	2'x4' Troffer Recessed Fluorescent, (3) 48", T-8 lamp, Instant Start Ballast, NLO (BF: .85-.95) Prismatic Acrylic Diffuser	1	36	Recessed T8 LED Retrofit Lamp with External Driver LED 4' T8 Lamp (3) 12W Lamps			5824	0.08	0.04	468	208
984	ADMINISTRATION BUILDING	1.410 WOMENS LOCKER ROOM	3	53	4' Wraparound Surface Mounted Fluorescent, (2) 48", T-8 lamp, Instant Start Ballast, NLO (BF: .85-.95) Prismatic Acrylic Diffuser	3	24	Surface Mounted T8 LED Retrofit Lamp with External Driver LED 4' T8 Lamp (2) 12W Lamps			5824	0.16	0.07	930	415
985	ADMINISTRATION BUILDING	1.410 WOMENS LOCKER ROOM	2	53	4' Vapor Proof Surface Mounted Fluorescent, (2) 48", T-8 lamp, Instant Start Ballast, NLO (BF: .85-.95) Prismatic Acrylic Diffuser	2	24	Surface Mounted T8 LED Retrofit Lamp with External Driver LED 4' T8 Lamp (2) 12W Lamps			5824	0.11	0.05	620	277
986	ADMINISTRATION BUILDING	1.410 WOMENS LOCKER ROOM	6	30	Recessed Can 6" Recessed Compact Fluorescent, quad, (1) 26W lamp Prismatic Acrylic Diffuser	6	8	Recessed Recessed Can 6" LED Light Fixture. (1) 8W			5824	0.18	0.05	1,041	277
987	ADMINISTRATION BUILDING	1.405 INMATE RECORDS OPEN AREA	7	101	2'x4' Troffer Recessed Fluorescent, (4) 48", T-8 lamp, Instant Start Ballast, NLO (BF: .85-.95) Prismatic Acrylic Diffuser	7	48	Recessed T8 LED Retrofit Lamp with External Driver LED 4' T8 Lamp (4) 12W Lamps			3640	0.71	0.33	2,576	1,211
988	ADMINISTRATION BUILDING	1.405 INMATE RECORDS OPEN AREA	9	80	2'x4' Troffer Recessed Fluorescent, (3) 48", T-8 lamp, Instant Start Ballast, NLO (BF: .85-.95) Prismatic Acrylic Diffuser	9	36	Recessed T8 LED Retrofit Lamp with External Driver LED 4' T8 Lamp (3) 12W Lamps			3640	0.72	0.32	2,631	1,168
989	ADMINISTRATION BUILDING	1.405 INMATE RECORDS OPEN AREA	2	53	4' Wraparound Surface Mounted Fluorescent, (2) 48", T-8 lamp, Instant Start Ballast, NLO (BF: .85-.95) Prismatic Acrylic Diffuser	2	24	Surface Mounted T8 LED Retrofit Lamp with External Driver LED 4' T8 Lamp (2) 12W Lamps			3640	0.11	0.05	388	173

Line #	Facility Area	Space	Pre Fixture Qty	Pre Watts/ Fixt	Pre Description	Post Fixture Qty	Post Watt/ Fixt	Post Description	Wallswitch Sensor	Ceiling Sensor	Hours of Operation	Base kW	Proposed kW	Base kWh	Proposed kWh
990	ADMINISTRATION BUILDING	1.404 TRAINING ROOM	4	80	2'x4' Troffer Recessed Fluorescent, (3) 48", T-8 lamp, Instant Start Ballast, NLO (BF: .85-.95) Prismatic Acrylic Diffuser	4	36	Recessed T8 LED Retrofit Lamp with External Driver LED 4' T8 Lamp (3) 12W Lamps			3640	0.32	0.14	1,169	519
991	ADMINISTRATION BUILDING	1.404 TRAINING ROOM	2	101	4' Wraparound Surface Mounted Fluorescent, (4) 48", T-8 lamp, Instant Start Ballast, NLO (BF: .85-.95) Prismatic Acrylic Diffuser	2	48	Surface Mounted T8 LED Retrofit Lamp with External Driver LED 4' T8 Lamp (4) 12W Lamps			3640	0.20	0.10	736	346
992	ADMINISTRATION BUILDING	1.409 MENS LOCKER ROOM	1	80	2'x4' Troffer Recessed Fluorescent, (3) 48", T-8 lamp, Instant Start Ballast, NLO (BF: .85-.95) Prismatic Acrylic Diffuser	1	36	Recessed T8 LED Retrofit Lamp with External Driver LED 4' T8 Lamp (3) 12W Lamps			5824	0.08	0.04	468	208
993	ADMINISTRATION BUILDING	1.409 MENS LOCKER ROOM	3	53	4' Wraparound Surface Mounted Fluorescent, (2) 48", T-8 lamp, Instant Start Ballast, NLO (BF: .85-.95) Prismatic Acrylic Diffuser	3	24	Surface Mounted T8 LED Retrofit Lamp with External Driver LED 4' T8 Lamp (2) 12W Lamps			5824	0.16	0.07	930	415
994	ADMINISTRATION BUILDING	1.409 MENS LOCKER ROOM	2	53	4' Vapor Proof Surface Mounted Fluorescent, (2) 48", T-8 lamp, Instant Start Ballast, NLO (BF: .85-.95) Prismatic Acrylic Diffuser	2	24	Surface Mounted T8 LED Retrofit Lamp with External Driver LED 4' T8 Lamp (2) 12W Lamps			5824	0.11	0.05	620	277
995	ADMINISTRATION BUILDING	1.409 MENS LOCKER ROOM	6	30	Recessed Can 6" Recessed Compact Fluorescent, quad, (1) 26W lamp Prismatic Acrylic Diffuser	6	8	Recessed Recessed Can 6" LED Light Fixture. (1) 8W			5824	0.18	0.05	1,041	277
996	ADMINISTRATION BUILDING	TRAINING OFFICE	2	80	2'x4' Troffer Recessed Fluorescent, (3) 48", T-8 lamp, Instant Start Ballast, NLO (BF: .85-.95) Prismatic Acrylic Diffuser	2	36	Recessed T8 LED Retrofit Lamp with External Driver LED 4' T8 Lamp (3) 12W Lamps	1		2730	0.16	0.07	585	259
997	ADMINISTRATION BUILDING	TRAINING OFFICE	2	53	4' Wraparound Surface Mounted Fluorescent, (2) 48", T-8 lamp, Instant Start Ballast, NLO (BF: .85-.95) Prismatic Acrylic Diffuser	2	24	Surface Mounted T8 LED Retrofit Lamp with External Driver LED 4' T8 Lamp (2) 12W Lamps	1		2730	0.11	0.05	388	173
998	ADMINISTRATION BUILDING	1.412 CRITICAL INCIDENT MANAGER	1	80	2'x4' Troffer Recessed Fluorescent, (3) 48", T-8 lamp, Instant Start Ballast, NLO (BF: .85-.95) Prismatic Acrylic Diffuser	1	36	Recessed T8 LED Retrofit Lamp with External Driver LED 4' T8 Lamp (3) 12W Lamps			3640	0.08	0.04	292	130
999	ADMINISTRATION BUILDING	STAFF BREAK ROOM	5	80	2'x4' Troffer Recessed Fluorescent, (3) 48", T-8 lamp, Instant Start Ballast, NLO (BF: .85-.95) Prismatic Acrylic Diffuser	5	36	Recessed T8 LED Retrofit Lamp with External Driver LED 4' T8 Lamp (3) 12W Lamps			3640	0.40	0.18	1,462	649
1000	ADMINISTRATION BUILDING	MAIL ROOM	8	80	2'x4' Troffer Recessed Fluorescent, (3) 48", T-8 lamp, Instant Start Ballast, NLO (BF: .85-.95) Prismatic Acrylic Diffuser	8	36	Recessed T8 LED Retrofit Lamp with External Driver LED 4' T8 Lamp (3) 12W Lamps			3640	0.64	0.29	2,339	1,038
1001	ADMINISTRATION BUILDING	MAIL ROOM VESTIBULE	1	0	Add Luminaire Recessed This pre-fixture code should be used as a placeholder when adding new additional fixtures. (No Diffuser)	1	8	Recessed Recessed Can 6" LED Light Fixture. (1) 8W			3640	0.00	0.01	-	29
1002	ADMINISTRATION BUILDING	MECHANICAL CLOSET	1	53	4' Wraparound Surface Mounted Fluorescent, (2) 48", T-8 lamp, Instant Start Ballast, NLO (BF: .85-.95) Prismatic Acrylic Diffuser	1	24	Surface Mounted T8 LED Retrofit Lamp with External Driver LED 4' T8 Lamp (2) 12W Lamps			520	0.05	0.02	28	12
1003	ADMINISTRATION BUILDING	SECURITY CLOSET	1	53	4' Wraparound Surface Mounted Fluorescent, (2) 48", T-8 lamp, Instant Start Ballast, NLO (BF: .85-.95) Prismatic Acrylic Diffuser	1	24	Surface Mounted T8 LED Retrofit Lamp with External Driver LED 4' T8 Lamp (2) 12W Lamps			520	0.05	0.02	28	12
1004	ADMINISTRATION BUILDING	OPEN ADMIN AREA	16	80	2'x4' Troffer Recessed Fluorescent, (3) 48", T-8 lamp, Instant Start Ballast, NLO (BF: .85-.95) Microcell Diffuser	16	36	Recessed T8 LED Retrofit Lamp with External Driver LED 4' T8 Lamp (3) 12W Lamps			3640	1.29	0.57	4,678	2,076
1005	ADMINISTRATION BUILDING	OPEN ADMIN AREA	1	53	2'x4' Troffer Recessed Fluorescent, (2) 48", T-8 lamp, Instant Start Ballast, NLO (BF: .85-.95) Microcell Diffuser	1	24	Recessed T8 LED Retrofit Lamp with External Driver LED 4' T8 Lamp (2) 12W Lamps			3640	0.05	0.02	194	86
1006	ADMINISTRATION BUILDING	OPEN ADMIN AREA	6	53	2'x4' Troffer Recessed Fluorescent, (2) 48", T-8 lamp, Instant Start Ballast, NLO (BF: .85-.95) Prismatic Acrylic Diffuser	6	24	Recessed T8 LED Retrofit Lamp with External Driver LED 4' T8 Lamp (2) 12W Lamps			3640	0.32	0.14	1,163	519
1007	ADMINISTRATION BUILDING	OPEN ADMIN AREA	3	80	2'x4' Troffer Recessed Fluorescent, (3) 48", T-8 lamp, Instant Start Ballast, NLO (BF: .85-.95) Prismatic Acrylic Diffuser	3	36	Recessed T8 LED Retrofit Lamp with External Driver LED 4' T8 Lamp (3) 12W Lamps			3640	0.24	0.11	877	389
1008	ADMINISTRATION BUILDING	OPEN ADMIN AREA	2	19	Universal Face Exit Sign Surface Mounted EXIT Compact Fluorescent, (2) 7W lamp (No Diffuser)	2	9	Surface Mounted Upgrade EXIT Sign LED Light Fixture. (1) 9W			8760	0.04	0.02	332	156
1009	ADMINISTRATION BUILDING	1.515 COPY ROOM	1	53	2'x4' Troffer Recessed Fluorescent, (2) 48", T-8 lamp, Instant Start Ballast, NLO (BF: .85-.95) Prismatic Acrylic Diffuser	1	24	Recessed T8 LED Retrofit Lamp with External Driver LED 4' T8 Lamp (2) 12W Lamps			3640	0.05	0.02	194	86
1010	ADMINISTRATION BUILDING	1.511 OFFICE	2	80	2'x4' Troffer Recessed Fluorescent, (3) 48", T-8 lamp, Instant Start Ballast, NLO (BF: .85-.95) Microcell Diffuser	2	36	Recessed T8 LED Retrofit Lamp with External Driver LED 4' T8 Lamp (3) 12W Lamps	1		2730	0.16	0.07	585	259
1011	ADMINISTRATION BUILDING	OFFICE	2	80	2'x4' Troffer Recessed Fluorescent, (3) 48", T-8 lamp, Instant Start Ballast, NLO (BF: .85-.95) Microcell Diffuser	2	36	Recessed T8 LED Retrofit Lamp with External Driver LED 4' T8 Lamp (3) 12W Lamps	1		2730	0.16	0.07	585	259
1012	ADMINISTRATION BUILDING	1.507 OFFICE	2	80	2'x4' Troffer Recessed Fluorescent, (3) 48", T-8 lamp, Instant Start Ballast, NLO (BF: .85-.95) Microcell Diffuser	2	36	Recessed T8 LED Retrofit Lamp with External Driver LED 4' T8 Lamp (3) 12W Lamps	1		2730	0.16	0.07	585	259
1013	ADMINISTRATION BUILDING	1.508 OFFICE	2	80	2'x4' Troffer Recessed Fluorescent, (3) 48", T-8 lamp, Instant Start Ballast, NLO (BF: .85-.95) Microcell Diffuser	2	36	Recessed T8 LED Retrofit Lamp with External Driver LED 4' T8 Lamp (3) 12W Lamps	1		2730	0.16	0.07	585	259
1014	ADMINISTRATION BUILDING	1.507 CONFERENCE ROOM	6	80	2'x4' Troffer Recessed Fluorescent, (3) 48", T-8 lamp, Instant Start Ballast, NLO (BF: .85-.95) Microcell Diffuser	6	36	Recessed T8 LED Retrofit Lamp with External Driver LED 4' T8 Lamp (3) 12W Lamps			1560	0.48	0.21	752	334
1015	ADMINISTRATION BUILDING	1.505 OFFICE	2	80	2'x4' Troffer Recessed Fluorescent, (3) 48", T-8 lamp, Instant Start Ballast, NLO (BF: .85-.95) Microcell Diffuser	2	36	Recessed T8 LED Retrofit Lamp with External Driver LED 4' T8 Lamp (3) 12W Lamps	1		2730	0.16	0.07	585	259
1016	ADMINISTRATION BUILDING	1.506 OFFICE	2	80	2'x4' Troffer Recessed Fluorescent, (3) 48", T-8 lamp, Instant Start Ballast, NLO (BF: .85-.95) Microcell Diffuser	2	36	Recessed T8 LED Retrofit Lamp with External Driver LED 4' T8 Lamp (3) 12W Lamps	1		2730	0.16	0.07	585	259
1017	ADMINISTRATION BUILDING	1.516 OFFICE	2	80	2'x4' Troffer Recessed Fluorescent, (3) 48", T-8 lamp, Instant Start Ballast, NLO (BF: .85-.95) Microcell Diffuser	2	36	Recessed T8 LED Retrofit Lamp with External Driver LED 4' T8 Lamp (3) 12W Lamps	1		2730	0.16	0.07	585	259
1018	ADMINISTRATION BUILDING	OFFICE	4	80	2'x4' Troffer Recessed Fluorescent, (3) 48", T-8 lamp, Instant Start Ballast, NLO (BF: .85-.95) Microcell Diffuser	4	36	Recessed T8 LED Retrofit Lamp with External Driver LED 4' T8 Lamp (3) 12W Lamps	1		2730	0.32	0.14	1,169	519
1019	ADMINISTRATION BUILDING	1.502 OFFICE	2	80	2'x4' Troffer Recessed Fluorescent, (3) 48", T-8 lamp, Instant Start Ballast, NLO (BF: .85-.95) Microcell Diffuser	2	36	Recessed T8 LED Retrofit Lamp with External Driver LED 4' T8 Lamp (3) 12W Lamps	1		2730	0.16	0.07	585	259

Line #	Facility Area	Space	Pre Fixture Qty	Pre Watts/ Fixt	Pre Description	Post Fixture Qty	Post Watt/ Fixt	Post Description	Wallswitch Sensor	Ceiling Sensor	Hours of Operation	Base kW	Proposed kW	Base kWh	Proposed kWh
1020	ADMINISTRATION BUILDING	OFFICE	2	80	2'x4' Troffer Recessed Fluorescent, (3) 48", T-8 lamp, Instant Start Ballast, NLO (BF: .85-.95) Microcell Diffuser	2	36	Recessed T8 LED Retrofit Lamp with External Driver LED 4' T8 Lamp (3) 12W Lamps	1		2730	0.16	0.07	585	259
1021	ADMINISTRATION BUILDING	1.509 / 1.306 HR CONFERENCE ROOM	7	80	2'x4' Troffer Recessed Fluorescent, (3) 48", T-8 lamp, Instant Start Ballast, NLO (BF: .85-.95) Prismatic Acrylic Diffuser	7	36	Recessed T8 LED Retrofit Lamp with External Driver LED 4' T8 Lamp (3) 12W Lamps			1560	0.56	0.25	877	389
1022	ADMINISTRATION BUILDING	1.523 STAFF MENS RESTROOM	1	53	4' Wraparound Surface Mounted Fluorescent, (2) 48", T-8 lamp, Instant Start Ballast, NLO (BF: .85-.95) Prismatic Acrylic Diffuser	1	24	Surface Mounted T8 LED Retrofit Lamp with External Driver LED 4' T8 Lamp (2) 12W Lamps	1		1092	0.05	0.02	78	35
1023	ADMINISTRATION BUILDING	1.522 STAFF WOMENS RESTROOM	1	53	4' Wraparound Surface Mounted Fluorescent, (2) 48", T-8 lamp, Instant Start Ballast, NLO (BF: .85-.95) Prismatic Acrylic Diffuser	1	24	Surface Mounted T8 LED Retrofit Lamp with External Driver LED 4' T8 Lamp (2) 12W Lamps	1		1092	0.05	0.02	78	35
1024	ADMINISTRATION BUILDING	HUMAN RESOURCES OFFICE	2	80	2'x4' Troffer Recessed Fluorescent, (3) 48", T-8 lamp, Instant Start Ballast, NLO (BF: .85-.95) Prismatic Acrylic Diffuser	2	36	Recessed T8 LED Retrofit Lamp with External Driver LED 4' T8 Lamp (3) 12W Lamps	1		2730	0.16	0.07	585	259
1025	ADMINISTRATION BUILDING	HUMAN RESOURCES OPEN OFFICE	2	80	2'x4' Troffer Recessed Fluorescent, (3) 48", T-8 lamp, Instant Start Ballast, NLO (BF: .85-.95) Prismatic Acrylic Diffuser	2	36	Recessed T8 LED Retrofit Lamp with External Driver LED 4' T8 Lamp (3) 12W Lamps	1		2730	0.16	0.07	585	259
1026	ADMINISTRATION BUILDING	HUMAN RESOURCES OPEN OFFICE	4	53	2'x4' Troffer Recessed Fluorescent, (2) 48", T-8 lamp, Instant Start Ballast, NLO (BF: .85-.95) Prismatic Acrylic Diffuser	4	24	Recessed T8 LED Retrofit Lamp with External Driver LED 4' T8 Lamp (2) 12W Lamps	1		2730	0.21	0.10	775	346
1027	ADMINISTRATION BUILDING	HR OFFICE	2	53	2'x4' Troffer Recessed Fluorescent, (2) 48", T-8 lamp, Instant Start Ballast, NLO (BF: .85-.95) Prismatic Acrylic Diffuser	2	24	Recessed T8 LED Retrofit Lamp with External Driver LED 4' T8 Lamp (2) 12W Lamps	1		2730	0.11	0.05	388	173
1028	ADMINISTRATION BUILDING	1.305 OFFICE	2	80	2'x4' Troffer Recessed Fluorescent, (3) 48", T-8 lamp, Instant Start Ballast, NLO (BF: .85-.95) Prismatic Acrylic Diffuser	2	36	Recessed T8 LED Retrofit Lamp with External Driver LED 4' T8 Lamp (3) 12W Lamps	1		2730	0.16	0.07	585	259
1029	ADMINISTRATION BUILDING	OFFICE	2	80	2'x4' Troffer Recessed Fluorescent, (3) 48", T-8 lamp, Instant Start Ballast, NLO (BF: .85-.95) Microcell Diffuser	2	36	Recessed T8 LED Retrofit Lamp with External Driver LED 4' T8 Lamp (3) 12W Lamps	1		2730	0.16	0.07	585	259
1030	ADMINISTRATION BUILDING	1.303 SUPERINTENDENT OFFICE	4	80	2'x4' Troffer Recessed Fluorescent, (3) 48", T-8 lamp, Instant Start Ballast, NLO (BF: .85-.95) Deep Cell Parabolic Diffuser	4	36	Recessed T8 LED Retrofit Lamp with External Driver LED 4' T8 Lamp (3) 12W Lamps	1		2730	0.32	0.14	1,169	519
1031	ADMINISTRATION BUILDING	OFFICE RESTROOM	1	53	4' Wraparound Surface Mounted Fluorescent, (2) 48", T-8 lamp, Instant Start Ballast, NLO (BF: .85-.95) Prismatic Acrylic Diffuser	1	24	Surface Mounted T8 LED Retrofit Lamp with External Driver LED 4' T8 Lamp (2) 12W Lamps	1		1092	0.05	0.02	78	35
1032	ADMINISTRATION BUILDING	MAIN ENTRY LOBBY	8	266	Recessed Can 12" Recessed Metal Halide, (1) 250W lamp Prismatic Acrylic Diffuser	8	49	Recessed Chip On Board (COB) Type Screw-in / Bypass Existing Ballast Light Emitting Diode Lamp, Screw-in, (1) 54W lamp			8760	2.13	0.39	18,658	3,406
1033	ADMINISTRATION BUILDING	MAIN ENTRY LOBBY (VESTIBULE)	1	53	2'x4' Troffer Recessed Flanged Fluorescent, (2) 48", T-8 lamp, Instant Start Ballast, NLO (BF: .85-.95) Prismatic Acrylic Diffuser	1	24	Recessed Flanged T8 LED Retrofit Lamp with External Driver LED 4' T8 Lamp (2) 12W Lamps			8760	0.05	0.02	466	208
1034	ADMINISTRATION BUILDING	MAIN ENTRY LOBBY	1	80	2'x4' Troffer Recessed Fluorescent, (3) 48", T-8 lamp, Instant Start Ballast, NLO (BF: .85-.95) Prismatic Acrylic Diffuser	1	36	Recessed T8 LED Retrofit Lamp with External Driver LED 4' T8 Lamp (3) 12W Lamps			8760	0.08	0.04	704	312
1035	ADMINISTRATION BUILDING	MAIN ENTRY LOBBY	1	53	2'x4' Troffer Recessed Fluorescent, (2) 48", T-8 lamp, Instant Start Ballast, NLO (BF: .85-.95) Prismatic Acrylic Diffuser	1	24	Recessed T8 LED Retrofit Lamp with External Driver LED 4' T8 Lamp (2) 12W Lamps			8760	0.05	0.02	466	208
1036	ADMINISTRATION BUILDING	MAIN ENTRY LOBBY	1	3	Universal Face Exit Sign Surface Mounted EXIT Light Emitting Diode, (1) 3W lamp, Single Sided (No Diffuser)	1	3	Existing luminaire to remain as is No Retrofit. To remain as is.			8760	0.00	0.00	25	25
1037	ADMINISTRATION BUILDING	1.104 MENS PUBLIC RESTROOM	1	53	2'x4' Troffer Recessed Flanged Fluorescent, (2) 48", T-8 lamp, Instant Start Ballast, NLO (BF: .85-.95) Prismatic Acrylic Diffuser	1	24	Recessed Flanged T8 LED Retrofit Lamp with External Driver LED 4' T8 Lamp (2) 12W Lamps			8760	0.05	0.02	466	208
1038	ADMINISTRATION BUILDING	1.105 WOMENS PUBLIC RESTROOM	1	53	2'x4' Troffer Recessed Flanged Fluorescent, (2) 48", T-8 lamp, Instant Start Ballast, NLO (BF: .85-.95) Prismatic Acrylic Diffuser	1	24	Recessed Flanged T8 LED Retrofit Lamp with External Driver LED 4' T8 Lamp (2) 12W Lamps			8760	0.05	0.02	466	208
1039	ADMINISTRATION BUILDING	1.110 ADA RESTROOM	1	53	4' Wraparound Surface Mounted Fluorescent, (2) 48", T-8 lamp, Instant Start Ballast, NLO (BF: .85-.95) Prismatic Acrylic Diffuser	1	24	Surface Mounted T8 LED Retrofit Lamp with External Driver LED 4' T8 Lamp (2) 12W Lamps	1		1092	0.05	0.02	78	35
1040	ADMINISTRATION BUILDING	STORAGE ROOM	1	53	4' Wraparound Surface Mounted Fluorescent, (2) 48", T-8 lamp, Instant Start Ballast, NLO (BF: .85-.95) Prismatic Acrylic Diffuser	1	24	Surface Mounted T8 LED Retrofit Lamp with External Driver LED 4' T8 Lamp (2) 12W Lamps			520	0.05	0.02	28	12
1041	ADMINISTRATION BUILDING	LOCKER AREA	2	53	2'x4' Troffer Recessed Fluorescent, (2) 48", T-8 lamp, Instant Start Ballast, NLO (BF: .85-.95) Deep Cell Parabolic Diffuser	2	24	Recessed T8 LED Retrofit Lamp with External Driver LED 4' T8 Lamp (2) 12W Lamps			8760	0.11	0.05	933	416
1042	Domestic Water Pump House	Interior-pump house	5	53	4' Strip Surface Mounted Fluorescent, (2) 48", T-8 lamp, Instant Start Ballast, NLO (BF: .85-.95) (No Diffuser)	5	24	Surface Mounted T8 LED Retrofit Lamp with External Driver LED 4' T8 Lamp (2) 12W Lamps			520	0.27	0.12	138	62
1043	Domestic Water Pump House	Building Exterior	3	86	Wall-Pack Wall Mounted High Pressure Sodium, (1) 70W lamp Prismatic Acrylic Diffuser	3	12	Wall Mounted Tall Wall-Pack LED Light Fixture. (1) 12W			4380	0.26	0.04	1,127	156
1044	Outdoor Maintenance Department Building	Open Area	3	53	4' Strip Surface Mounted Fluorescent, (2) 48", T-8 lamp, Instant Start Ballast, NLO (BF: .85-.95) (No Diffuser)	3	24	Surface Mounted T8 LED Retrofit Lamp with External Driver LED 4' T8 Lamp (2) 12W Lamps			8760	0.16	0.07	1,399	624
1045	Outdoor Maintenance Department Building	Open Area	12	53	1'x4' Troffer Wall Mounted Fluorescent, (2) 48", T-8 lamp, Instant Start Ballast, NLO (BF: .85-.95) Flat Glass Lens	12	24	Wall Mounted T8 LED Retrofit Lamp with External Driver LED 4' T8 Lamp (2) 12W Lamps			8760	0.64	0.29	5,597	2,498
1046	Outdoor Maintenance Department Building	Tool Crib	1	53	4' Strip Surface Mounted Fluorescent, (2) 48", T-8 lamp, Instant Start Ballast, NLO (BF: .85-.95) (No Diffuser)	1	24	Surface Mounted T8 LED Retrofit Lamp with External Driver LED 4' T8 Lamp (2) 12W Lamps			3640	0.05	0.02	194	86
1047	Outdoor Maintenance Department Building	Staff Restroom	1	53	4' Industrial Surface Mounted Fluorescent, (2) 48", T-8 lamp, Instant Start Ballast, NLO (BF: .85-.95) (No Diffuser)	1	24	Surface Mounted T8 LED Retrofit Lamp with External Driver LED 4' T8 Lamp (2) 12W Lamps			1456	0.05	0.02	78	35
1048	Outdoor Maintenance Department Building	Staff Restroom	1	21	Ceiling Fan Recessed Compact Fluorescent, spiral, (1) 23W lamp Frosted Glass Lens	1	8	Recessed Install LED Screw-in A-Style Lamp Light Emitting Diode Lamp, Screw-in, (1) 9W lamp			1456	0.02	0.01	30	12
1049	Outdoor Maintenance Department Building	Inmate Restroom	1	53	4' Industrial Surface Mounted Fluorescent, (2) 48", T-8 lamp, Instant Start Ballast, NLO (BF: .85-.95) (No Diffuser)	1	24	Surface Mounted T8 LED Retrofit Lamp with External Driver LED 4' T8 Lamp (2) 12W Lamps			1456	0.05	0.02	78	35

Line #	Facility Area	Space	Pre Fixture Qty	Pre Watts/ Fixt	Pre Description	Post Fixture Qty	Post Watt/ Fixt	Post Description	Wallswitch Sensor	Ceiling Sensor	Hours of Operation	Base kW	Proposed kW	Base kWh	Proposed kWh
1050	Outdoor Maintenance Department Building	Inmate Restroom	1	21	Ceiling Fan Recessed Compact Fluorescent, spiral, (1) 23W lamp Frosted Glass Lens	1	8	Recessed Install LED Screw-in A-Style Lamp Light Emitting Diode Lamp, Screw-in, (1) 9W lamp			1456	0.02	0.01	30	12
1051	Outdoor Maintenance Department Building	Office	2	53	4' Industrial Surface Mounted Fluorescent, (2) 48", T-8 lamp, Instant Start Ballast, NLO (BF: .85-.95) (No Diffuser)	2	24	Surface Mounted T8 LED Retrofit Lamp with External Driver LED 4' T8 Lamp (2) 12W Lamps			3640	0.11	0.05	388	173
1052	Outdoor Maintenance Department Building	Building Exterior	2	266	Wall-Pack Wall Mounted High Pressure Sodium, (1) 250W lamp Prismatic Acrylic Diffuser	2	51	Wall Mounted Wall-Pack LED Light Fixture. (1) 52W			4380	0.53	0.10	2,332	451
1053	Records/Storage Garage	Records-EST No Access	6	53	4' Strip Surface Mounted Fluorescent, (2) 48", T-8 lamp, Instant Start Ballast, NLO (BF: .85-.95) (No Diffuser)	6	24	Surface Mounted T8 LED Retrofit Lamp with External Driver LED 4' T8 Lamp (2) 12W Lamps			520	0.32	0.14	166	74
1054	Records/Storage Garage	Garage	1	0	No Existing Fixture Existing luminaire to remain as is To remain as is. (No Diffuser)	1	0	Existing luminaire to remain as is No Retrofit. To remain as is.			0	0.00	0.00	-	-
1055	Records/Storage Garage	Exterior Flood	1	975	Flood Light Slipfitter Metal Halide, (1) 1000W lamp Flat Glass Lens	1	297	Slipfitter Flood Light LED Light Fixture. (1) 300W			200	0.97	0.30	195	59
1056	Central Plant	Plant Open Area	27	420	High-Bay Hook/Cord/Plug High Pressure Sodium, (1) 400W lamp Prismatic Acrylic Diffuser	27	198	Hook/Cord/Plug High-Bay LED Light Fixture. (1) 200W - HIGH			8760	11.33	5.35	99,259	46,831
1057	Central Plant	Plant Open Area	1	53	4' Industrial Surface Mounted Fluorescent, (2) 48", T-8 lamp, Instant Start Ballast, NLO (BF: .85-.95) (No Diffuser)	1	24	Surface Mounted T8 LED Retrofit Lamp with External Driver LED 4' T8 Lamp (2) 12W Lamps			8760	0.05	0.02	466	208
1058	Central Plant	Plant Open Area	3	3	Universal Face Exit Sign Surface Mounted EXIT Light Emitting Diode, (1) 3W lamp, Single Sided (No Diffuser)	3	3	Existing luminaire to remain as is No Retrofit. To remain as is.			8760	0.01	0.01	74	74
1059	Central Plant	Mezzanine/Storage	3	156	8' Vapor Proof Surface Mounted Fluorescent, (2) 96", STD lamp (No Diffuser)	3	64	Surface Mounted 8' Vapor Proof LED Light Fixture. (1) 65W			8760	0.47	0.19	4,103	1,691
1060	Central Plant	14.306 Staff Restroom	1	53	4' Wraparound Surface Mounted Fluorescent, (2) 48", T-8 lamp, Instant Start Ballast, NLO (BF: .85-.95) (No Diffuser)	1	24	Surface Mounted T8 LED Retrofit Lamp with External Driver LED 4' T8 Lamp (2) 12W Lamps			1456	0.05	0.02	78	35
1061	Central Plant	14.307 Inmate Toilet	1	53	4' Wraparound Surface Mounted Fluorescent, (2) 48", T-8 lamp, Instant Start Ballast, NLO (BF: .85-.95) (No Diffuser)	1	24	Surface Mounted T8 LED Retrofit Lamp with External Driver LED 4' T8 Lamp (2) 12W Lamps			1456	0.05	0.02	78	35
1062	Central Plant	14.308 Tool Storage	2	53	4' Wraparound Surface Mounted Fluorescent, (2) 48", T-8 lamp, Instant Start Ballast, NLO (BF: .85-.95) (No Diffuser)	2	24	Surface Mounted T8 LED Retrofit Lamp with External Driver LED 4' T8 Lamp (2) 12W Lamps			520	0.11	0.05	55	25
1063	Central Plant	Jims Office	3	53	4' Industrial Surface Mounted Fluorescent, (2) 48", T-8 lamp, Instant Start Ballast, NLO (BF: .85-.95) (No Diffuser)	3	24	Surface Mounted T8 LED Retrofit Lamp with External Driver LED 4' T8 Lamp (2) 12W Lamps			3640	0.16	0.07	581	259
1064	Central Plant	Generator Room	11	53	4' Industrial Surface Mounted Fluorescent, (2) 48", T-8 lamp, Instant Start Ballast, NLO (BF: .85-.95) (No Diffuser)	11	24	Surface Mounted T8 LED Retrofit Lamp with External Driver LED 4' T8 Lamp (2) 12W Lamps - HIGH			520	0.59	0.26	305	136
1065	Central Plant	Generator Room	3	3	Universal Face Exit Sign Surface Mounted EXIT Light Emitting Diode, (1) 3W lamp, Single Sided (No Diffuser)	3	3	Existing luminaire to remain as is No Retrofit. To remain as is.			8760	0.01	0.01	74	74
1066	Central Plant	Electrical Room	17	53	4' Industrial Surface Mounted Fluorescent, (2) 48", T-8 lamp, Instant Start Ballast, NLO (BF: .85-.95) (No Diffuser)	17	24	Surface Mounted T8 LED Retrofit Lamp with External Driver LED 4' T8 Lamp (2) 12W Lamps - HIGH			520	0.91	0.40	471	210
1067	Central Plant	Electrical Room	2	3	Universal Face Exit Sign Surface Mounted EXIT Light Emitting Diode, (1) 3W lamp, Single Sided (No Diffuser)	2	3	Existing luminaire to remain as is No Retrofit. To remain as is.			8760	0.01	0.01	49	49
1068	Central Plant	Operator Office	3	53	4' Strip Surface Mounted Fluorescent, (2) 48", T-8 lamp, Instant Start Ballast, NLO (BF: .85-.95) (No Diffuser)	3	24	Surface Mounted T8 LED Retrofit Lamp with External Driver LED 4' T8 Lamp (2) 12W Lamps			8760	0.16	0.07	1,399	624
1069	Central Plant	Coal Storage	9	413	High-Bay Hook/Cord/Plug Metal Halide, (1) 400W lamp Prismatic Acrylic Diffuser	9	198	Hook/Cord/Plug High-Bay LED Light Fixture. (1) 200W - HIGH			8760	3.72	1.78	32,588	15,610
1070	Central Plant	Coal Storage	5	53	4' Vapor Proof Surface Mounted Fluorescent, (2) 48", T-8 lamp, Instant Start Ballast, NLO (BF: .85-.95) (No Diffuser)	5	24	Surface Mounted T8 LED Retrofit Lamp with External Driver LED 4' T8 Lamp (2) 12W Lamps			8760	0.27	0.12	2,332	1,041
1071	Central Plant	Coal Storage Stairwell	3	266	Wall-Pack Wall Mounted High Pressure Sodium, (1) 250W lamp Prismatic Acrylic Diffuser	3	51	Wall Mounted Wall-Pack LED Light Fixture. (1) 52W			8760	0.80	0.15	6,997	1,353
1072	Central Plant	Basement Coal Area Difficult Access	5	413	High-Bay Hook/Cord/Plug Metal Halide, (1) 400W lamp Prismatic Acrylic Diffuser	5	198	Hook/Cord/Plug High-Bay LED Light Fixture. (1) 200W - HIGH			8760	2.07	0.99	18,105	8,672
1073	Central Plant	Building Exterior	9	266	Wall-Pack Wall Mounted High Pressure Sodium, (1) 250W lamp Prismatic Acrylic Diffuser	9	51	Wall Mounted Wall-Pack LED Light Fixture. (1) 52W			4380	2.40	0.46	10,495	2,029
1074	Central Plant	Building Exterior	10	420	Shoebox Fixture Wall Mounted High Pressure Sodium, (1) 400W lamp Flat Glass Lens	10	149	Wall Mounted Shoebox Fixture LED Light Fixture. (1) 150W - HIGH			4380	4.20	1.49	18,381	6,504
1075	Auto Weld Sheet Metal Shop	Auto Shop	23	53	4' Industrial Surface Mounted Fluorescent, (2) 48", T-8 lamp, Instant Start Ballast, NLO (BF: .85-.95) (No Diffuser)	23	24	Surface Mounted T8 LED Retrofit Lamp with External Driver LED 4' T8 Lamp (2) 12W Lamps - HIGH			3640	1.22	0.55	4,458	1,989
1076	Auto Weld Sheet Metal Shop	Auto Shop	10	413	High-Bay Hook/Cord/Plug Metal Halide, (1) 400W lamp Prismatic Acrylic Diffuser	10	198	Hook/Cord/Plug High-Bay LED Light Fixture. (1) 200W - HIGH			3640	4.13	1.98	15,046	7,207
1077	Auto Weld Sheet Metal Shop	Auto Shop	2	3	Universal Face Exit Sign Surface Mounted EXIT Light Emitting Diode, (1) 3W lamp, Single Sided (No Diffuser)	2	3	Existing luminaire to remain as is No Retrofit. To remain as is.			8760	0.01	0.01	49	49
1078	Auto Weld Sheet Metal Shop	Office	2	80	2'x4' Troffer Recessed Fluorescent, (3) 48", T-8 lamp, Instant Start Ballast, NLO (BF: .85-.95) Prismatic Acrylic Diffuser	2	36	Recessed T8 LED Retrofit Lamp with External Driver LED 4' T8 Lamp (3) 12W Lamps	1		2730	0.16	0.07	585	259
1079	Auto Weld Sheet Metal Shop	Parts Cage	2	156	8' Vapor Proof Surface Mounted Fluorescent, (2) 96", STD lamp (No Diffuser)	2	64	Surface Mounted 8' Vapor Proof LED Light Fixture. (1) 65W			3640	0.31	0.13	1,137	468

Line #	Facility Area	Space	Pre Fixture Qty	Pre Watts/ Fixt	Pre Description	Post Fixture Qty	Post Watt/ Fixt	Post Description	Wallswitch Sensor	Ceiling Sensor	Hours of Operation	Base kW	Proposed kW	Base kWh	Proposed kWh
1080	Auto Weld Sheet Metal Shop	Tool Crib	10	53	4' Industrial Surface Mounted Fluorescent, (2) 48", T-8 lamp, Instant Start Ballast, NLO (BF: .85-.95) (No Diffuser)	10	24	Surface Mounted T8 LED Retrofit Lamp with External Driver LED 4' T8 Lamp (2) 12W Lamps - HIGH			3640	0.53	0.24	1,938	865
1081	Auto Weld Sheet Metal Shop	Weld Shop	10	53	4' Industrial Surface Mounted Fluorescent, (2) 48", T-8 lamp, Instant Start Ballast, NLO (BF: .85-.95) (No Diffuser)	10	24	Surface Mounted T8 LED Retrofit Lamp with External Driver LED 4' T8 Lamp (2) 12W Lamps - HIGH			3640	0.53	0.24	1,938	865
1082	Auto Weld Sheet Metal Shop	Weld Shop	1	53	1'x4' Troffer Wall Mounted Fluorescent, (2) 48", T-8 lamp, Instant Start Ballast, NLO (BF: .85-.95) Flat Glass Lens	1	24	Wall Mounted T8 LED Retrofit Lamp with External Driver LED 4' T8 Lamp (2) 12W Lamps			3640	0.05	0.02	194	86
1083	Auto Weld Sheet Metal Shop	Weld Shop	3	413	High-Bay Hook/Cord/Plug Metal Halide, (1) 400W lamp Prismatic Acrylic Diffuser	3	198	Hook/Cord/Plug High-Bay LED Light Fixture. (1) 200W - HIGH			3640	1.24	0.59	4,514	2,162
1084	Auto Weld Sheet Metal Shop	Tool Crib	1	53	4' Industrial Surface Mounted Fluorescent, (2) 48", T-8 lamp, Instant Start Ballast, NLO (BF: .85-.95) (No Diffuser)	1	24	Surface Mounted T8 LED Retrofit Lamp with External Driver LED 4' T8 Lamp (2) 12W Lamps			3640	0.05	0.02	194	86
1085	Auto Weld Sheet Metal Shop	Tool Crib	1	80	2'x4' Troffer Surface Mounted Fluorescent, (3) 48", T-8 lamp, Instant Start Ballast, NLO (BF: .85-.95) Deep Cell Parabolic Diffuser	1	36	Surface Mounted T8 LED Retrofit Lamp with External Driver LED 4' T8 Lamp (3) 12W Lamps			3640	0.08	0.04	292	130
1086	Auto Weld Sheet Metal Shop	Metal Storage	4	238	Flood Light Knuckle fitter 1/2" NPT Halogen Incandescent, (1) 250W lamp Flat Glass Lens	4	79	Knuckle fitter 1/2" NPT Flood Light LED Light Fixture. (1) 80W			200	0.95	0.32	190	63
1087	Auto Weld Sheet Metal Shop	Metal Storage	1	53	4' Vapor Proof Surface Mounted Fluorescent, (2) 48", T-8 lamp, Instant Start Ballast, NLO (BF: .85-.95) Vapor Proof Gasketed Diffuser	1	24	Surface Mounted T8 LED Retrofit Lamp with External Driver LED 4' T8 Lamp (2) 12W Lamps			200	0.05	0.02	11	5
1088	Auto Weld Sheet Metal Shop	Metal Storage	2	413	High-Bay Hook/Cord/Plug Metal Halide, (1) 400W lamp Prismatic Acrylic Diffuser	2	198	Hook/Cord/Plug High-Bay LED Light Fixture. (1) 200W			200	0.83	0.40	165	79
1089	Auto Weld Sheet Metal Shop	Sheet Metal Shop ESTIMATE	16	53	4' Industrial Surface Mounted Fluorescent, (2) 48", T-8 lamp, Instant Start Ballast, NLO (BF: .85-.95) (No Diffuser)	16	24	Surface Mounted T8 LED Retrofit Lamp with External Driver LED 4' T8 Lamp (2) 12W Lamps - HIGH			3640	0.85	0.38	3,101	1,384
1090	Auto Weld Sheet Metal Shop	Sheet Metal Shop Office ESTIMATE	4	53	4' Industrial Surface Mounted Fluorescent, (2) 48", T-8 lamp, Instant Start Ballast, NLO (BF: .85-.95) (No Diffuser)	4	24	Surface Mounted T8 LED Retrofit Lamp with External Driver LED 4' T8 Lamp (2) 12W Lamps			3640	0.21	0.10	775	346
1091	Warehouse	Building Exterior	10	420	Shoebox Fixture Wall Mounted High Pressure Sodium, (1) 400W lamp Flat Glass Lens	10	149	Wall Mounted Shoebox Fixture LED Light Fixture. (1) 150W - HIGH			4380	4.20	1.49	18,381	6,504
1092	Warehouse	Building Exterior	3	266	Wall-Pack Wall Mounted High Pressure Sodium, (1) 250W lamp Prismatic Acrylic Diffuser	3	51	Wall Mounted Wall-Pack LED Light Fixture. (1) 52W			4380	0.80	0.15	3,498	676
1093	Warehouse	Walk in Cooler	14	8	Jelly Jar Surface Mounted Light Emitting Diode Lamp, Screw-in, (1) 9W lamp Glass Jelly Jar	14	8	Surface Mounted Install LED Screw-in A-Style Lamp Light Emitting Diode Lamp, Screw-in, (1) 9W lamp			3640	0.11	0.11	392	413
1094	Warehouse	Walk in Freezer	4	19	Flood Light Surface Mounted LED Light Fixture. (1) 20W Flat Glass Lens	4	19	Existing luminaire to remain as is No Retrofit. To remain as is.			3640	0.08	0.08	274	274
1095	Warehouse	Uniform Locker	12	53	4' Strip Surface Mounted Fluorescent, (2) 48", T-8 lamp, Instant Start Ballast, NLO (BF: .85-.95) (No Diffuser)	12	24	Surface Mounted T8 LED Retrofit Lamp with External Driver LED 4' T8 Lamp (2) 12W Lamps			3640	0.64	0.29	2,326	1,038
1096	Warehouse	Warehouse Storage	208	53	4' Industrial Surface Mounted Fluorescent, (2) 48", T-8 lamp, Instant Start Ballast, NLO (BF: .85-.95) (No Diffuser)	208	24	Surface Mounted T8 LED Retrofit Lamp with External Driver LED 4' T8 Lamp (2) 12W Lamps - HIGH			3640	11.08	4.94	40,315	17,989
1097	Warehouse	Staff Restroom	1	53	4' Wraparound Surface Mounted Fluorescent, (2) 48", T-8 lamp, Instant Start Ballast, NLO (BF: .85-.95) Prismatic Acrylic Diffuser	1	24	Surface Mounted T8 LED Retrofit Lamp with External Driver LED 4' T8 Lamp (2) 12W Lamps			1456	0.05	0.02	78	35
1098	Warehouse	Janitor Closet	1	53	4' Wraparound Surface Mounted Fluorescent, (2) 48", T-8 lamp, Instant Start Ballast, NLO (BF: .85-.95) Prismatic Acrylic Diffuser	1	24	Surface Mounted T8 LED Retrofit Lamp with External Driver LED 4' T8 Lamp (2) 12W Lamps			1456	0.05	0.02	78	35
1099	Warehouse	Inmate Restroom	1	53	4' Wraparound Surface Mounted Fluorescent, (2) 48", T-8 lamp, Instant Start Ballast, NLO (BF: .85-.95) Prismatic Acrylic Diffuser	1	24	Surface Mounted T8 LED Retrofit Lamp with External Driver LED 4' T8 Lamp (2) 12W Lamps			1456	0.05	0.02	78	35
1100	Warehouse	Short Term Storage	6	53	4' Industrial Surface Mounted Fluorescent, (2) 48", T-8 lamp, Instant Start Ballast, NLO (BF: .85-.95) (No Diffuser)	6	24	Surface Mounted T8 LED Retrofit Lamp with External Driver LED 4' T8 Lamp (2) 12W Lamps			3640	0.32	0.14	1,163	519
1101	Warehouse	Storage Mezzanine	6	53	4' Industrial Surface Mounted Fluorescent, (2) 48", T-8 lamp, Instant Start Ballast, NLO (BF: .85-.95) (No Diffuser)	6	24	Surface Mounted T8 LED Retrofit Lamp with External Driver LED 4' T8 Lamp (2) 12W Lamps			3640	0.32	0.14	1,163	519
1102	Warehouse	Restricted Tool Room ESTIMATE	3	53	4' Industrial Surface Mounted Fluorescent, (2) 48", T-8 lamp, Instant Start Ballast, NLO (BF: .85-.95) (No Diffuser)	3	24	Surface Mounted T8 LED Retrofit Lamp with External Driver LED 4' T8 Lamp (2) 12W Lamps			3640	0.16	0.07	581	259
1103	Warehouse	Office	2	80	2'x4' Troffer Recessed Fluorescent, (3) 48", T-8 lamp, Instant Start Ballast, NLO (BF: .85-.95) Prismatic Acrylic Diffuser	2	36	Recessed T8 LED Retrofit Lamp with External Driver LED 4' T8 Lamp (3) 12W Lamps	1		2730	0.16	0.07	585	259
1104	Warehouse	Office	2	80	2'x4' Troffer Recessed Fluorescent, (3) 48", T-8 lamp, Instant Start Ballast, NLO (BF: .85-.95) Prismatic Acrylic Diffuser	2	36	Recessed T8 LED Retrofit Lamp with External Driver LED 4' T8 Lamp (3) 12W Lamps	1		2730	0.16	0.07	585	259
1105	Warehouse	Office	2	80	2'x4' Troffer Recessed Fluorescent, (3) 48", T-8 lamp, Instant Start Ballast, NLO (BF: .85-.95) Prismatic Acrylic Diffuser	2	36	Recessed T8 LED Retrofit Lamp with External Driver LED 4' T8 Lamp (3) 12W Lamps	1		2730	0.16	0.07	585	259
1106	Warehouse	Mezzanine Office Area (combined)	5	101	4' Wraparound Surface Mounted Fluorescent, (4) 48", T-8 lamp, Instant Start Ballast, NLO (BF: .85-.95) Prismatic Acrylic Diffuser	5	48	Surface Mounted T8 LED Retrofit Lamp with External Driver LED 4' T8 Lamp (4) 12W Lamps			3640	0.51	0.24	1,840	865
1107	Warehouse	Dock Lights	3	62	Dock Light Wall Mounted Incandescent, (1) 65W lamp (No Diffuser)	3	13	Wall Mounted Install LED Screw-in PAR38 Lamp Light Emitting Diode Lamp, Screw-in, (1) 14W lamp			200	0.19	0.04	37	8

Equipment Specifications Sheets

ECM #1 Facility-wide LED Lighting Upgrade - interior fixtures

and

ECM#2 Lighting Controls

SubstiTUBE® IPS LED T8

Compatible glass LED T8 for use with instant start and select programmed rapid start electronic T8 ballasts

SubstiTUBE IPS LED T8 lamps are an energy saving alternative, designed to replace traditional fluorescent T8 lamps. These LED T8 lamps contain no mercury, provide instant light and a uniform light distribution.

Engineered to operate on existing instant start and select programmed rapid start electronic T8 ballasts, these lamps minimize labor and recycling costs. Because the SubstiTUBE IPS LED T8 is not affected by switching cycles, the use of occupancy or vacancy sensors can be installed with the existing instant start ballasts for optimal energy savings.

Install a new QHE instant start ballast with the SubstiTUBE IPS LED T8 lamp for optimal performance and to take advantage of the QUICK 72SUB+ system warranty. (See website for details.)

Key Features & Benefits

- Optimized glass optics available in:
  - Dimmable on 0-10V 4ft/15.5W
  - Non-dimmable 4ft/12W, 3ft/12W, 2ft/8.5W
- Optimized plastics optics available in:
  - Non-dimmable 4ft/15.5W
- CCT: 3000K, 3500K, 4100K, 5000K
- Beam angle: 220°
- Compatible with instant start and select programmed rapid start electronic T8 ballasts with input voltage of 120-277V and 347V
- THD <20%, power factor >0.90
- G13 medium bi-pin base
- Long life: 50,000 hour life (L_{70})
- 6 year limited system warranty with purchase of new QHE IS ballast (16/7 operation)
- 5 year limited lamp warranty (24/7 operation)
- No warm-up time, instant-on with full light output and stable lamp to lamp color
- No UV emission
- Suitable for dry and damp locations (cannot come in direct contact with water)
- Maximize energy savings with occupancy sensors
- Suitable for open and enclosed fixtures

Product Offering

Length	Color Temperature	CRI
48in.	3000K, 3500K, 4100K, 5000K	82
36in.	3000K, 3500K, 4100K, 5000K	82
24in.	3000K, 3500K, 4100K, 5000K	82

Application Information

Applications

- Cove lighting
- Display case
- General illumination
- Parking garage
- Tunnels

Specifications and Certifications

RoHS compliant

SYLVANIA

Specification Data

Catalog #	Type
Project	
Comments	
Prepared by	

Specifications

Energy Data

Ambient Operating Temperature: -4°F to 122°F (-20°C to 50°C)
EMI/RFI: FCC Title 47 CFR, Part 18, Non-Consumer
Max Case Temperature: LED15T8/L48 = 158°F (70°C), LED12T8/L48 = 149°F (65°C)

Lighting Data

Lumen Output: See specification table (output is dependent on operating ballast)
Lumens per Watt: Up to 122
Correlated Color Temperature (CCT): 3000K, 3500K, 4100K, 5000K
Color Rendering Index (CRI): 82
R9: Up to 14

Ordering Information

Item Number	Ordering Abbreviation	Length	Lamp Power (W)[1]	Lamp Lumens (lm)[1]	Color Temp.	CRI	Beam Angle (°)	Package Quantity	DLC (Y/N)
Glass									
75286	LED15T8/L48/DIM/830/SUB/G6	4ft	15.5	2100	3000K	82	220	10	Y
75287	LED15T8/L48/DIM/835/SUB/G6	4ft	15.5	2100	3500K	82	220	10	Y
75288	LED15T8/L48/DIM/841/SUB/G6	4ft	15.5	2200	4100K	82	220	10	Y
75297	LED15T8/L48/DIM/850/SUB/G6	4ft	15.5	2200	5000K	82	220	10	Y
79526	LED12T8/L48/FG/830/SUB/G6	4ft	12	1650	3000K	82	220	10	Y
79527	LED12T8/L48/FG/835/SUB/G6	4ft	12	1650	3500K	82	220	10	Y
79528	LED12T8/L48/FG/841/SUB/G6	4ft	12	1650	4100K	82	220	10	Y
79529	LED12T8/L48/FG/850/SUB/G6	4ft	12	1650	5000K	82	220	10	Y
75128	LED12T8/L36/FG/830/SUB/G6	3ft	12.5	1650	3000K	82	220	10	N/A
75129	LED12T8/L36/FG/835/SUB/G6	3ft	12.5	1650	3500K	82	220	10	N/A
75130	LED12T8/L36/FG/841/SUB/G6	3ft	12.5	1650	4100K	82	220	10	N/A
75131	LED12T8/L36/FG/850/SUB/G6	3ft	12.5	1650	5000K	82	220	10	N/A
75064	LED8T8/L24/FG/830/SUB/G6	2ft	8.5	1100	3000K	82	220	10	N
75065	LED8T8/L24/FG/835/SUB/G6	2ft	8.5	1100	3500K	82	220	10	N
75066	LED8T8/L24/FG/841/SUB/G6	2ft	8.5	1100	4100K	82	220	10	N
75070	LED8T8/L24/FG/850/SUB/G6	2ft	8.5	1100	5000K	82	220	10	N
Plastic									
75132	LED15T8/L48/FP/830/SUB/G6	4ft	15.5	2100	3000K	82	150	10	Y
75133	LED15T8/L48/FP/835/SUB/G6	4ft	15.5	2100	3500K	82	150	10	Y
75134	LED15T8/L48/FP/841/SUB/G6	4ft	15.5	2200	4100K	82	150	10	Y
75135	LED15T8/L48/FP/850/SUB/G6	4ft	15.5	2200	5000K	82	150	10	Y

1. Average Lamp Power and Average Lamp Lumens rated on QHE2x32T8/UNV ISN.

Ordering Guide

LED	15	T8	/	L	48	/	DIM	/	8	41	/	SUB	/	G6
LED	Wattage (ISN ballast)	Lamp Type		Length	48 Inches		DIM = frosted glass dimmable FG = frosted glass non-dimmable FP = frosted plastic non-dimmable		CRI = 82	Color Temperature 41 = 4100K 30 = 3000K 35 = 3500K 50 = 5000K		SubstiTUBE® IPS (Compatible LED T8 for use with instant start and select programmed rapid start T8 electronic ballasts)		Generation

Application Information

Application Notes

1. Due to numerous ballast designs and topologies, this lamp should be tested on existing ballasts before mass quantities are installed.
2. Not intended for use with older dedicated voltage (120V or 277V) ballasts. These ballasts have electronic components that degrade over time and may become unsuitable for the new LED T8 lamp.
3. All installation, inspection, and maintenance of lighting fixtures should be done with the power to the fixture turned off. Lamps should be installed and operated in compliance with the National Electrical Code (NEC), Underwriters Laboratories Inc. (UL) requirements, and all applicable codes and regulations.
4. Insert and align tubes properly in lamp holders. Partial insertion results in a poor or intermittent electrical contact that can result in short lamp life and arcing. Arcing at the lamp holder can result in localized overheating.
5. For instant start ballasts, use lamp holders with an internal shunt or ensure that lamp holders are wired in a shunt configuration.
6. For Programmed Rapid Start ballasts, use rapid-start lamp holders (non-shunted lamp holders).
7. De-lamp is not allowed for ISH ballasts. For approved ISN and ISL ballasts, de-lamp is allowed for only 1 lamp so long as the ballast factor remains below 1.20 (for example, 4 lamp ballast can de-lamp to 3 lamps).

Application Notes (continued)

8. Operating temperature range between -4°F and 122°F (-20°C and 50°C).
9. Suitable for use in dry and damp environments.
10. Maximum mounting distance between tube and ballast is 20 feet.
11. Please read all installation instructions before attempting installation.
12. For detailed warranty information, please see www.sylvania.com.

Specifications & Lighting Data

Lamp	Ballast	Current (AMPS)	System Power (W)	System Lumens (lm)	System Efficacy (lm/W)	No. of Lamps
LED15T8/L48	QHE2X32T8/UNV ISN	0.33 / 0.14	36.0	4400	122	2
LED12T8/L48	QHE2x32T8/UNV ISN	0.27 / 0.12	29.0	3300	114	2
LED12T8/L36	QHE2x32T8/UNV ISN	0.24/0.11	28.0	3300	117	2
LED8T8/L24	QHE2x32T8/UNV ISN	0.17/0.08	20.0	2200	110	2

Note: For complete system information refer to LED495 – SubstiTUBE System Information.

Assembly Diagram

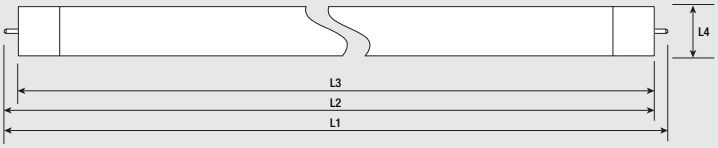

Product Description	L1 End of Base Pin to End of Opposite Pin End	L2 Base Face to End of Opposite Base Pin	L3 Base Face to Base Face	L4 Bulb Outside Diameter
LED15T8/L48/DIM (4ft)	47.725" ± 0.055" (1212.2mm ± 1.4mm)	47.45" ± 0.05" (1205.25mm ± 1.25mm)	max 47.22" (1199.4mm)	1.02" ± 0.08" (25.9mm ± 2.0mm)
LED12T8L36 (3ft)	35.72" ± 0.055" (907.4mm ± 1.4mm)	35.45" ± 0.05" (900.45mm ± 1.25mm)	max 35.22" (894.6mm)	1.02" ± 0.08" (25.9mm ± 2.0mm)
LED08T8L24 (2ft)	23.72" ± 0.055" (602.6mm ± 1.4mm)	23.45" ± 0.05" (595.65mm ± 1.25mm)	max 23.22" (589.8mm)	1.02" ± 0.08" (25.9mm ± 2.0mm)

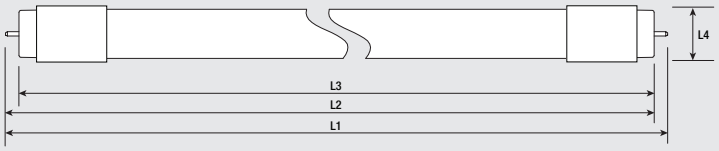

Product Description	L1 End of Base Pin to End of Opposite Pin End	L2 Base Face to End of Opposite Base Pin	L3 Base Face to Base Face	L4 Bulb Outside Diameter
LED15T8/L48 (4ft)	47.725" ± 0.055" (1212.2mm ± 1.4mm)	47.45" ± 0.05" (1205.25mm ± 1.25mm)	max 47.22" (1199.4mm)	1.08" ± 0.08" (27.5mm ± 2.0mm)
LED12T8/L48 (4ft)	47.725" ± 0.055" (1212.2mm ± 1.4mm)	47.45" ± 0.05" (1205.25mm ± 1.25mm)	max 47.22" (1199.4mm)	1.09" ± 0.08" (27.9mm ± 2.0mm)

Warranty

SubstiTUBE® IPS LED T8 lamps are covered by the LED T8 Lamp Limited Warranty and the QUICK 72SUB+ System Warranty, a comprehensive system warranty. For additional details, please visit www.sylvania.com/warranty.

LEDVANCE LLC
200 Ballardvale Street
Wilmington, MA 01887 USA
Phone 1-800-LIGHTBULB (1-800-544-4828)
www.sylvania.com

SYLVANIA and LEDVANCE are registered trademarks.
All other trademarks are those of their respective owners.
Licensee of product trademark SYLVANIA in general lighting.
Specifications subject to change without notice.

/sylvania /sylvania

SYLVANIA

© 2017 LEDVANCE LLC

Light is OSRAM

OSRAM

QUICKTRONIC® QHE LED T8

Universal Voltage Systems

Low Power LED System

LED T8 / Electronic Control Gear Guide

SubstiTUBE® IPS LED T8 Lamps
1-lamp QHE 1xLEDT8/UNV-ISL-SC
2-lamp QHE 2xLEDT8/UNV-ISL-SC
3-lamp QHE 3xLEDT8/UNV-ISL-SC
4-lamp QHE 4xLEDT8/UNV-ISL-SC

Key System Features

- Up to 133 LPW (lumens/watt) with SubstiTUBE LED T8
- Lowest power LED T8 Systems
- Universal voltage (120-277)
- Small Can enclosure size
- Up to 63% energy savings compared to T12 magnetic systems
- Ambient Starting Temp: -4°F to 122°F (-20°C to 50°C)
- <20% THD
- RoHS compliant
- Lead-free solder and manufacturing process

Application Information

OSRAM QUICKTRONIC QHE LED T8 are ideally suited for:

- Any applications where the lowest power T8 systems are needed for maximum energy savings
- Commercial & Retail
- Energy Management
- Energy Retrofits
- Hospitality & Institutional
- New Construction

OSRAM QUICKTRONIC High Efficiency LED T8 (QHE LED) Electronic Control Gears (ECG) offer several advantages:

1. **Optimized design for SubstiTUBE LED T8**
   - Up to 44% in energy savings compared to standard T8 Fluorescent systems
   - Maximum energy savings when compared to F34T12 magnetically ballasted systems
2. **Parallel Circuitry:** keeps remaining LED T8 lit if one or more go out.
3. **Banded Packaging**
   - Distributor-friendly for easy stocking and individual sales
   - ESCO friendly for fast installation
   - Reduced waste
   - Easy removable bands
   - No tangled wires

These ECGs are also RoHS compliant and feature lead-free solder and manufacturing process.

OSRAM QUICKTRONIC High Efficiency LED T8 (QHE LED) systems are covered up to 8 years by the SubstiTRONIC™ warranty, the most comprehensive LED system warranty in the industry.

System Information

OSRAM QUICKTRONIC QHE LED T8 System advantages:

- Operate from 120V through 277V
- Eliminates "wrong voltage" errors
- Highest System Efficacy

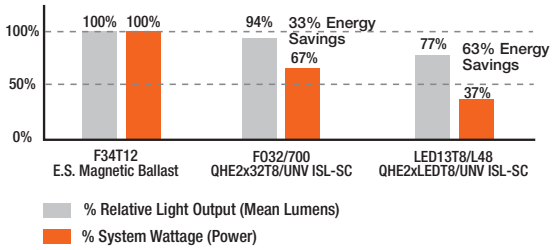

System Description	Input Power (W)	Initial System Lumens	System Efficacy LPW	Relative Initial Light Output	Energy Savings
F34T12 – E.S. Magnetic Ballast	72	4660	65	Baseline	Baseline
FO32/700 – QHE2x32T8/UNV ISL-SC	48	4370	91	94%	33%
LED13T8/L48 – QHE2XLEDT8/UNV ISL-SC	27	3600	133	77%	63%

High Efficiency Universal Voltage (120-277V) Low Power LED Systems

Item Number	Electronic Control Gear (ECG)	Input Current (AMPS)	SubstiTUBE LED T8	No. of LED T8	System Lumens (lm)	Input Power (W)	System Efficacy (lm/W)
75307	QHE1XLEDT8/UNV ISL-SC	0.09/0.04	LED10T8/L48/FG/SUB/G7	1	1400	11	127
		0.10/0.05	LED13T8/L48/DIM/G8	1	1800	14	129
		0.13/0.06	LED15T8/L48/DIM/G7	1	1850	15.5	119
75308	QHE2XLEDT8/UNV ISL-SC	0.18/0.08	LED10T8/L48/FG/SUB/G7	2	2800	22	127
		0.18/0.08	LED13T8/L48/DIM/G8	2	3600	27	133
		0.26/0.11	LED15T8/L48/DIM/G7	2	3700	31	119
75309	QHE3XLEDT8/UNV ISL-SC	0.28/0.12	LED10T8/L48/FG/SUB/G7	3	4200	33	127
		0.27/0.12	LED13T8/L48/DIM/G8	3	5300	40	132
		0.38/0.17	LED15T8/L48/DIM/G7	3	5800	46	126
75310	QHE4XLEDT8/UNV ISL-SC	0.37/0.16	LED10T8/L48/FG/SUB/G7	4	5600	45	124
		0.38/0.17	LED13T8/L48/DIM/G8	4	7000	53	132
		0.53/0.23	LED15T8/L48/DIM/G7	4	7750	64	121

Use only with SubstiTUBE IPS LED T8*

Item No.	LED T8 Description	Length
79544	LED10T8/L48/FG/830/SUB/G7	4ft
79545	LED10T8/L48/FG/835/SUB/G7	4ft
79546	LED10T8/L48/FG/841/SUB/G7	4ft
79547	LED10T8/L48/FG/850/SUB/G7	4ft

Item No.	LED T8 Description	Length
75508	LED13T8/L48/DIM/830/SUB/G8	4ft
75509	LED13T8/L48/DIM/835/SUB/G8	4ft
75510	LED13T8/L48/DIM/841/SUB/G8	4ft
75511	LED13T8/L48/DIM/850/SUB/G8	4ft

Item No.	LED T8 Description	Length
75339	LED15T8/L48/DIM/830/SUB/G7	4ft
75340	LED15T8/L48/DIM/835/SUB/G7	4ft
75341	LED15T8/L48/DIM/841/SUB/G7	4ft
75342	LED15T8/L48/DIM/850/SUB/G7	4ft

*For additional SubstiTUBE LED T8 details, please refer to LED465.

Wiring Diagrams

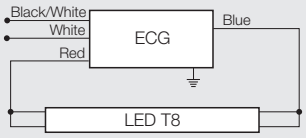

QHE LED 1 x T8

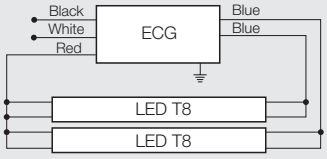

QHE LED 2 x T8

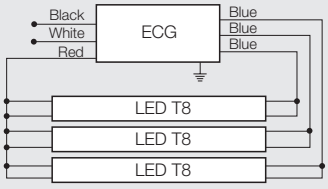

QHE LED 3 x T8

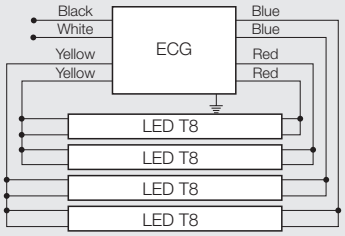

QHE LED 4 x T8

No delamping is permitted on any SubstiTRONIC LED T8 System.
In order to prevent premature ECG and lamp failures "do not hot re-lamp". Electrical power to the fixture must be turned off when installing or replacing LED T8 lamps.
Use lamp holders with an internal shunt or ensure that lamp holders are wired in a shunt configuration.

Dimensions:
Overall: 9.5" L x 1.68" W x 1.18" H
Mounting: 8.90"

Product Weight:
14 oz each (approx.)

Wiring:
Leads only
(no connectors provided)

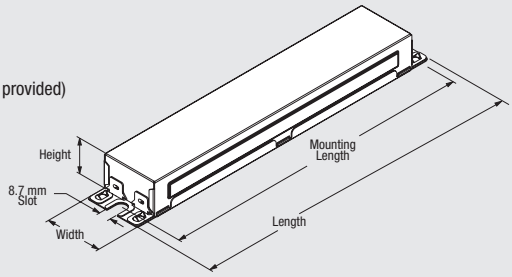

Ordering Guide

Item Number	**75307 QHE 1 x LEDT8 / UNV ISL - SC**	Case Size
QUICKTRONIC High Efficiency		Low Power System
Number of LED T8		Line Voltage
		SubstiTUBE LEDT8

Specification Data

Type	
Catalog #	
Project	
Comments	
Prepared by	

Performance Guide

Data based upon SubstiTUBE® LED T8 shown.

Specifications

System Output: Low Power
Circuit Type: Parallel
Ambient Operating Temperature:
-4°F to 122°F (-20°C to 50°C)
Input Frequency: 50/60 Hz
Low THD: <20%
Power Factor: >90%
Voltage Range: ±10% of 120-277V rated line (108-305V)

cETLus Listed Class P, Type 1 Outdoor
70°C Max Case Temperature
FCC 47CFR Part 18 Non-Consumer
Class A Sound Rating
RoHS Compliant[1]
ANSI C62.41 Cat. A Transient Protection
Remote Mounting (Max. wire length from case to lampholder): 20 ft

1 Complies with European Union Restriction of Hazardous Substances (Directive EC 2002/95)

System Life / Warranty

QUICKTRONIC High Efficiency QHE LED products are covered up to 8 years by the SubstiTRONIC™ warranty, the most comprehensive LED system warranty in the industry. For additional warranty details, please refer to the warranty section of www.osram.us/warranty.

Products distributed by LEDVANCE LLC.
Call 1-800-LIGHTBULB for Customer Service

SYLVANIA is a registered trademark of OSRAM SYLVANIA Inc.
SUBSTITRONIC is a trademark of OSRAM SYLVANIA Inc.
OSRAM and QUICKTRONIC are registered trademarks of OSRAM GmbH.
SUBSTITUBE is a registered trademark of LEDVANCE GmbH.
All other trademarks are those of their respective owners.

Specifications subject to change without notice.

© 2018 OSRAM SYLVANIA Inc. All rights reserved.

OSRAM

41

Product Family Overview

Edge-Lit Panel

Optional LED Flat Panel Upgrade. This applies to Education and Main Building recessed Luminaires.

Ordering Abbreviation

PANELF1A/032UNVD835/14G/WH/E

LEDVANCE

Specifications

1x4, 2x2 Wattage: **2x4 Wattage:**	32W 32W, 40W	**Sizes:**	1x4, 2x2, 2x4
Lumens:	Up to 4,200 lm	**CCT:**	3500K, 4000K, 5000K
Efficacy:	Up to 114 LPW	**Lifetime:**	≥50,000 h (L_{70})
Dimming:	0-10V	**Options:**	Emergency Battery Backup
Voltage:	120-277V	**Warranty:**	5 years

Key Features and Benefits:

- High quality assembly and post painted frame results in a seamless finish
- Low glare and uniform illumination for user comfort
- 15/16" and 9/16" T-Grid ceilings (recessed)
- Slim design suitable for low plenum access
- Available in 1x4, 2x2, 2x4
- Replaces fluorescent luminaires for energy savings up to 47%

Applications: Office, Retail, Education and Hospitality

Accessories

Surface Mount Kit (1x4, 2x2, 2x4)

70132	SMKITA14GWH	Surface Mount Kit 1x4
70380	SMKITA22GWH	Surface Mount Kit 2x2
70381	SMKITA24GWH	Surface Mount Kit 2x4
	Flange Kit	Flange Kit 1x4
	Flange Kit	Flange Kit 2x4

*DLC pending on Emergency Versions

SYLVANIA

LEDVANCE

SYLVANIA Edge Lit Panels (Line Extension)

Item Number	Ordering Description	Size	Watts	CRI	CCT	Lumens	LPW	Voltage
60331	PANELF2A/032UNVD835/14G/WH	1x4	32	80	3500K		125	120-277
60332	PANELF2A/032UNVD840/14G/WH	1x4	32	80	4000K		125	120-277
60333	PANELF2A/032UNVD850/14G/WH	1x4	32	80	5000K		125	120-277
60325	PANELF2A/032UNVD835/22G/WH	2x2	32	80	3500K		125	120-277
60326	PANELF2A/032UNVD840/22G/WH	2x2	32	80	4000K		125	120-277
60327	PANELF2A/032UNVD850/22G/WH	2x2	32	80	5000K		125	120-277
60337	PANELF2A/032UNVD835/24G/WH	2x4	32	80	3500K		125	120-277
60338	PANELF2A/032UNVD840/24G/WH	2x4	32	80	4000K		125	120-277
60339	PANELF2A/032UNVD850/24G/WH	2x4	32	80	5000K		125	120-277
	PANELF2A/040UNVD835/24G/WH	2x4	40	80	3500K		125	120-277
	PANELF2A/040UNVD840/24G/WH	2x4	40	80	4000K		125	120-277
	PANELF2A/040UNVD850/24G/WH	2x4	40	80	5000K		125	120-277
60301	PANELF2B/020UNVD835/14G/WH	1x4	20	80	3500K		100	120-277
60302	PANELF2B/020UNVD840/14G/WH	1x4	20	80	4000K		100	120-277
60303	PANELF2B/020UNVD850/14G/WH	1x4	20	80	5000K		100	120-277
60301	PANELF2B/026UNVD835/14G/WH	1x4	26	80	3500K		100	120-277

SYLVANIA

LEDVANCE

SYLVANIA Edge Lit Panels (Line Extension)

Item Number	Ordering Description	Size	Watts	CRI	CCT	Lumens	LPW	Voltage
60334	PANELF2A/032UNVD835/14G/WH/E	1x4	32	80	3500K		125	120-277
60335	PANELF2A/032UNVD840/14G/WH/E	1x4	32	80	4000K		125	120-277
60336	PANELF2A/032UNVD850/14G/WH/E	1x4	32	80	5000K		125	120-277
60328	PANELF2A/032UNVD835/22G/WH/E	2x2	32	80	3500K		125	120-277
60329	PANELF2A/032UNVD840/22G/WH/E	2x2	32	80	4000K		125	120-277
60330	PANELF2A/032UNVD850/22G/WH/E	2x2	32	80	5000K		125	120-277
60340	PANELF2A/032UNVD835/24G/WH/E	2x4	32	80	3500K		125	120-277
60341	PANELF2A/032UNVD840/24G/WH/E	2x4	32	80	4000K		125	120-277
60342	PANELF2A/032UNVD850/24G/WH/E	2x4	32	80	5000K		125	120-277
	PANELF2A/040UNVD835/24G/WH/E	2x4	40	80	3500K		125	120-277
	PANELF2A/040UNVD840/24G/WH/E	2x4	40	80	4000K		125	120-277
	PANELF2A/040UNVD850/24G/WH/E	2x4	40	80	5000K		125	120-277
60304	PANELF2B/020UNVD835/14G/WH/E	1x4	20	80	3500K		100	120-277
60305	PANELF2B/020UNVD840/14G/WH/E	1x4	20	80	4000K		100	120-277
60306	PANELF2B/020UNVD850/14G/WH/E	1x4	20	80	5000K		100	120-277
60310	PANELF2B/026UNVD835/14G/WH/E	1x4	26	80	3500K		100	120-277

SYLVANIA

LEDVANCE

SYLVANIA Edge Lit Panels (Line Extension, Emergency Versions)

Item Number	Ordering Description	Size	Watts	CRI	CCT	Lumens	LPW	Voltage	Options
60311	PANELF2B/026UNVD840/14G/WH/E	1x4	26	80	4000K		100	120-277	Emergency Battery Back up
60312	PANELF2B/026UNVD850/14G/WH/E	1x4	26	80	5000K		100	120-277	Emergency Battery Back up
60352	PANELF2B/020UNVD835/22G/WH/E	2x2	20	80	3500K		100	120-277	Emergency Battery Back up
60353	PANELF2B/020UNVD840/22G/WH/E	2x2	20	80	4000K		100	120-277	Emergency Battery Back up
60354	PANELF2B/020UNVD850/22G/WH/E	2x2	20	80	5000K		100	120-277	Emergency Battery Back up
60322	PANELF2B/026UNVD835/22G/WH/E	2x2	26	80	3500K		100	120-277	Emergency Battery Back up
60323	PANELF2B/026UNVD840/22G/WH/E	2x2	26	80	4000K		100	120-277	Emergency Battery Back up
60324	PANELF2B/026UNVD850/22G/WH/E	2x2	26	80	5000K		100	120-277	Emergency Battery Back up
60322	PANELF2B/026UNVD835/24G/WH/E	2x4	26	80	3500K		100	120-277	Emergency Battery Back up
60323	PANELF2B/026UNVD840/24G/WH/E	2x4	26	80	4000K		100	120-277	Emergency Battery Back up
60324	PANELF2B/026UNVD850/24G/WH/E	2x4	26	80	5000K		100	120-277	Emergency Battery Back up
60298	PANELF2B/032UNVD835/24G/WH/E	2x4	32	80	3500K		100	120-277	Emergency Battery Back up
60299	PANELF2B/032UNVD840/24G/WH/E	2x4	32	80	4000K		100	120-277	Emergency Battery Back up
60300	PANELF2B/032UNVD850/24G/WH/E	2x4	32	80	5000K		100	120-277	Emergency Battery Back up
60343	PANELF2B/050UNVD835/24G/WH/E	2x4	50	80	3500K		100	120-277	Emergency Battery Back up
60347	PANELF2B/050UNVD840/24G/WH/E	2x4	50	80	4000K		100	120-277	Emergency Battery Back up

SYLVANIA

LEDVANCE

SYLVANIA Edge Lit Panels (Line Extension, Extended Voltage Options)

Item Number	Ordering Description	Size	Watts	CRI	CCT	Lumens	LPW	Voltage	Options
60274	PANELF2B/020UNHD835/14G/WH	1x4	20	80	3500K		100	120-347	Emergency Battery Back up
60275	PANELF2B/020UNHD840/14G/WH	1x4	20	80	4000K		100	120-347	Emergency Battery Back up
60276	PANELF2B/020UNHD850/14G/WH	1x4	20	80	5000K		100	120-347	Emergency Battery Back up
60268	PANELF2B/026UNHD835/14G/WH	1x4	26	80	3500K		100	120-347	Emergency Battery Back up
60269	PANELF2B/026UNHD840/14G/WH	1x4	26	80	4000K		100	120-347	Emergency Battery Back up
60270	PANELF2B/026UNHD850/14G/WH	1x4	26	80	5000K		100	120-347	Emergency Battery Back up
60291	PANELF2B/020UNHD835/22G/WH	2x2	20	80	3500K		100	120-347	Emergency Battery Back up
60292	PANELF2B/020UNHD840/22G/WH	2x2	20	80	4000K		100	120-347	Emergency Battery Back up
60293	PANELF2B/020UNHD850/22G/WH	2x2	20	80	5000K		100	120-347	Emergency Battery Back up
60277	PANELF2B/026UNHD835/22G/WH	2x2	26	80	3500K		100	120-347	Emergency Battery Back up
60278	PANELF2B/026UNHD840/22G/WH	2x2	26	80	4000K		100	120-347	Emergency Battery Back up
60279	PANELF2B/026UNHD850/22G/WH	2x2	26	80	5000K		100	120-347	Emergency Battery Back up
60288	PANELF2B/026UNHD835/24G/WH	2x4	26	80	3500K		100	120-347	Emergency Battery Back up
60289	PANELF2B/026UNHD840/24G/WH	2x4	26	80	4000K		100	120-347	Emergency Battery Back up
60290	PANELF2B/026UNHD850/24G/WH	2x4	26	80	5000K		100	120-347	Emergency Battery Back up
60271	PANELF2B/032UNHD835/24G/WH	2x4	32	80	3500K		100	120-347	Emergency Battery Back up

SYLVANIA

LEDVANCE

Sylvania Edge-Lit Panels Ordering Logic

PANELF	XX/	XX	XXX	D	8	XX/	XX	G/	WH/	X
Product Name	Generation	Wattage	Input Voltage	Dimming	CRI	Color Temp (CCT)	Dimension	Mounting	Color/Finish	Option
PANELF	2A	32W (1x4,2x2) 40W (2x4)	UNV = 120-277 UNH = 120-347	D = 0-10V	≥80	3500K 4000K 5000K	14 = 1x4 22 = 2x2 24 = 2x4	G = Grid	WH = White	Blank = None E = Emergency battery backup
	3A	20 (1x4, 2x2) 26 (1x4, 2x2,2x4) 32 (2x4) 50 (2x4)								

SYLVANIA

ULTRA LED™ RT5/6 HO

Recessed Downlight Kit

SYLVANIA ULTRA RT5/6 HO is a universal input voltage 5" and 6" compatible LED recessed downlight kit that creates high performing white light and is optimized for new construction and retrofit applications utilizing pin based compact fluorescent lamps. Installation is done quickly and easily in most standard six-inch frames.

The RT5/6 HO downlight is offered in 650 lumen, 700 lumen, 900 lumen and 1500 lumen options and achieves up to 88 lumens per watt.

The RT5/6 HO is designed to deliver light output comparable to traditional 1x13W, 1x18W, 1x26W and 2x26W pin based compact fluorescent luminaires.

Application Information

Application Notes

1. Operating temperature range between -4°F and +104°F (-20°C and +40°C).
2. Suitable for dry, damp or wet indoor or outdoor locations.
3. Compatible with Philips Bodine ELI-S-20 Emergency Lighting Micro Inverter.
4. Designed to install in standard 6" CFL mounting frame. For a list of compatible housings, please refer to www.sylvania.com/RT6.
5. For detailed warranty information, please see www.sylvania.com/RT6.
6. The RT5/6HO 650 and 700 lumen is compatible with 120V Phase cut dimmers and 277V Leviton Dimmer model IPX06-70Z .
7. The RT5/6 HO 900 and 1500 lumen are compatible with Leviton 0-10V dimmer model IP710-DL.
8. For installation in non-insulated ceilings: If insulation is present, it may be placed around the retrofit kit as long as a three-inch space is maintained around the kit.
9. Installation performed as a stand-alone kit (without frame) is recommended for hard ceiling. Installation of a recessed incandescent frame is recommended for tiled ceiling application for proper support of the retrofit kit.

Key Features & Benefits

- Three input voltages:
  - 120V
  - 120-277V Universal
  - 347V
- Lumen package:
  - 650 lumens @ 8 watts (line voltage dimmable)
  - 700 lumens @ 8 watts (line voltage dimmable)
  - 900 lumens @ 13 watts (0-10V Dimmable)
  - 1500 lumens @ 17 watts (0-10V Dimmable)
- Replacement for 13W, 18W, 26W and 32W CFL pin based lamps
- Fits in standard 5" and 6" CFL mounting frame
- CCT: 2700K, 3000K, 3500K & 4000K
- CRI of >80 and >90
- 35,000 and 50,000 hour life (L_{70})
- Suitable for dry, damp and wet indoor or outdoor locations (650lm Indoor only)
- UL1598 Listed and Classified for stand-alone and retrofit applications
- Reduces energy consumption up to 34%
- Lasts up to 4 times longer than compact fluorescent lamps
- No warm-up time, instant-on with full light output and stable lamp to lamp color
- Integrated white trim and metal conduit adaptor (included) for direct replacement
- Suitable for use in 8" applications using optional trim extender accessory

Product Offering

Ordering Abbreviation	Wattage	CCT
LED/RT5/6/HO/650	8	3000K, 4000K
LED/RT5/6/HO/700	8	2700K, 3000K, 3500K, 4000K
LED/RT5/6/HO/900	13	2700K, 3000K, 3500K, 4000K
LED/RT5/6/HO/1500	17	3000K, 3500K, 4000K

Specifications and Certifications

SYLVANIA

Specification Data

Catalog #	Type
Project	
Comments	
Prepared by	

Specifications

Energy Data

Minimum Starting Temp: -20°C (-4°F)

EMI/RFI: RT6/HO 1500 lumen: FCC Title 47 CFR, Part 15, Class B
RT6/HO 900 lumen: FCC Title 47 CFR, Part 15, Class A

Sound Rating: <24dBA

Input Voltage: 120-277V

Power Factor: >0.90

Input Frequency: 60Hz

THD: <20%

Maximum Ambient Operating Temperature (Non-Insulated Ceiling): 40°C (104°F)

Lighting Data

Lumen Output: 650, 700, 900 and 1500

Color

Color Rendering Index (CRI): >80 and >90

Ordering Information

Item Number	Ordering Abbreviation	Recessed Housing	Replaced CFL Wattage	Nominal Wattage (W)	Delivered Light Output (lm)	Input Voltage	LPW	Color Temperature	Avg. Rated Life (hrs)*	Packaging Configuration	Dimmable
75331	LED/RT5/6/650/930	5" and 6"	13W	8	650	120V	72	3000K	35,000	2/case	YES (Phase Cut)
75332	LED/RT5/6/650/940	5" and 6"	13W	8	650	120V	72	4000K	35,000	2/case	YES (Phase Cut)
75228	LED/RT/5/6/HO/700/827	5" and 6"	13W	8	700	120-277V	87	2700K	50,000	4/case	YES (Phase Cut)
75229	LED/RT/5/6/HO/700/830	5" and 6"	13W	8	700	120-277V	87	3000K	50,000	4/case	YES (Phase Cut)
75230	LED/RT/5/6/HO/700/835	5" and 6"	13W	8	700	120-277V	87	3500K	50,000	4/case	YES (Phase Cut)
75231	LED/RT/5/6/HO/700/840	5" and 6"	13W	8	700	120-277V	87	4000K	50,000	4/case	YES (Phase Cut)
75137	LED/RT5/6/HO/900/827	5" and 6"	18W	13	900	120-277V	69	2700K	50,000	4/case	YES (0-10V Low Voltage)
75138	LED/RT5/6/HO/900/830	5" and 6"	18W	13	900	120-277V	69	3000K	50,000	4/case	YES (0-10V Low Voltage)
75140	LED/RT5/6/HO/900/835	5" and 6"	18W	13	900	120-277V	69	3500K	50,000	4/case	YES (0-10V Low Voltage)
75139	LED/RT5/6/HO/900/840	5" and 6"	18W	13	900	120-277V	69	4000K	50,000	4/case	YES (0-10V Low Voltage)
75327	LED/RT5/6/HO/900/840/347V	5" and 6"	18W	13	900	347V	69	4000K	50,000	4/Case	NO
72528	LED/RT5/6/1500/HO/830	5" and 6"	26W & 32W	17	1500	120-277V	88	3000K	50,000	4/case	YES (0-10V Low Voltage)
72529	LED/RT5/6/1500/HO/835	5" and 6"	26W & 32W	17	1500	120-277V	88	3500K	50,000	4/case	YES (0-10V Low Voltage)
72530	LED/RT5/6/1500/HO/840	5" and 6"	26W & 32W	17	1500	120-277V	88	4000K	50,000	4/case	YES (0-10V Low Voltage)
75328	LED/RT5/6/HO/1500/840/347V	5" and 6"	26W & 32W	17	1500	347V	88	4000K	50,000	4/case	NO

*LED lamp life is defined as the number of hours when 50% of an average group of identical lamps reached 70% of its initial lumens.

Ordering Guide

LED	/	RT5/6	/	1500	/	HO	/	8	30
LED		Product Name RT5/6 5/6 = fits 5" and 6" frames		Light Output 1500lm, 900lm, 700lm, 650lm		High Output		CRI >80	Color Temperature 2700K, 3000K, 3500K, 4000K

Energy Savings

Basic Product Description	LED Lumens	LED Life	Traditional Lamp Types	Lumens	Life	Watts Saved With RT6	RT6 Energy Savings*	RT6 Life Benefit
RT5/6 HO 8W	700	50,000	13W CFL DD, DT	800	16,000	5	$27	3X
RT5/6 HO 13W	900	50,000	18W CFL DD, DT	1200	16,000	5	$27	3X
RT5/6/HO 17W	1500	50,000	26W CFL DD, DT	1800	16,000	9	$49	3X
RT5/6/HO 17W	1500	50,000	32W CFL DD, DT	2400	16,000	15	$82	3X

* Based on $0.11/kWh over 50,000 hours life.

Accessories

RT5/6 Retrofit Trim	
75095	RT/5/6/TRIM/DKBZ
75097	RT/5/6/TRIM/BLK
75098	RT/5/6/TRIM/ORBZ
75099	RT/5/9/TRIM/SN
Trim Ring Extender	
75082	RT6/8/TRIMEXT
Rough In Frame	
71708	LED/RT6HO/FRAME

75097

75098

75099

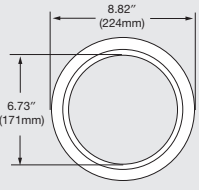

75082

71708

Assembly Diagram

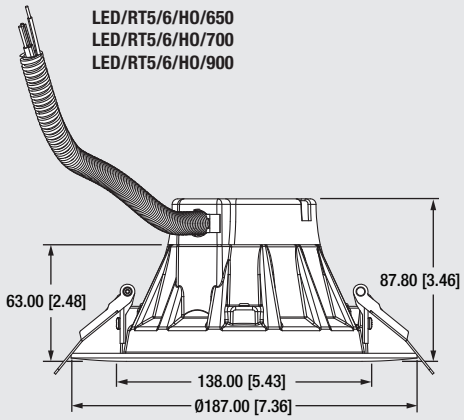

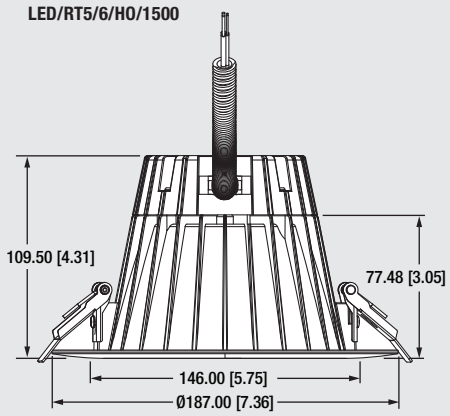

Dimensions are in mm [in]

Photometric Information

Luminous Intensity Distribution Diagram

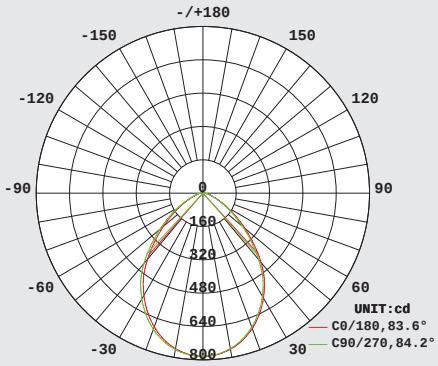

Illuminance at Distance

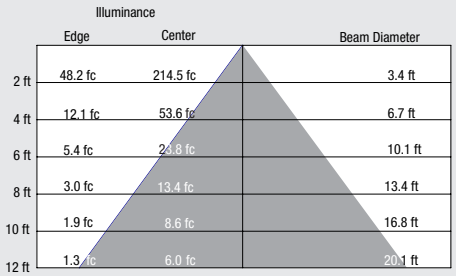

RT5/6 HO 1500 lumen

Illuminance at Distance

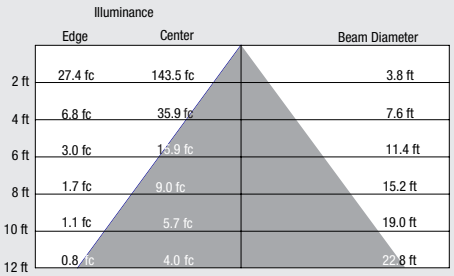

RT5/6 900 lumen

Illuminance at Distance

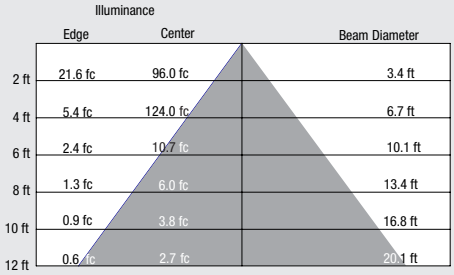

RT5/6 700 lumen

LEDVANCE LLC
200 Ballardvale Street
Wilmington, MA 01887 USA
Phone 1-800-LIGHTBULB (1-800-544-4828)
www.sylvania.com

SYLVANIA and LEDVANCE are registered trademarks.
All other trademarks are those of their respective owners.
Licensee of product trademark SYLVANIA in general lighting.
Specifications subject to change without notice.

/sylvania /sylvania

© 2017 LEDVANCE LLC

SYLVANIA Luminaires

Vapor Tight

Catalog #	Type
Project	
Notes	
Date	
Prepared by	

Dimensions

	L	W	H
2 ft 25W	24.9" (632mm)	4.0" (102mm)	3.3" (85mm)
4 ft 20W	48.5" (1232mm)	3.3" (85mm)	3.3" (85mm)
4 ft 40/50W	48.5" (1232mm)	4.0" (102mm)	3.3" (85mm)
4 ft IP66	49.1" (1247mm)	4.7" (120mm)	3.3" (85mm)
8ft 65W	96" (2438mm)	4.0" (102mm)	3.3" (85mm)

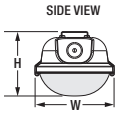

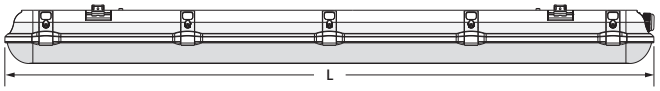

Product Features

- Corrosion resistant housing with captive stainless steel mounting accessories and included waterproof compression fitting
- IP65 or IP66 rated, ETL sanitation listed for NSF splash zones, and a wide operating temperature of -40°C to 50°C
- Optional integrated microwave (daylight/motion) sensor for additional energy savings

Wattage Comparison Chart

Vapor Tight

Traditional Source	Traditional System Wattage	LED System Wattage	Energy Savings
2 F17 T8	33	20/25	39%/24%
1 F32 T8	27	20/25	26%/7%
35W HPS	45	20/25	56%/44%
50W HPS	62	20/25	68%/60%
70W HPS	92	25	73%
2 F28 T8	50	40/50	20%/0%
2 F32 T8	54	40/50	26%/7%
1 F96 T12	86	40/50	53%/42%
70 W HPS	91	40/50	56%/45%
4 F32 T8	108	65	39%
S F96 T12	172	65	62%
150W HPS	170	65	61%
150W MH	188	65	65%
175W MH	210	65	69%
250W HPS	295	65	78%
250W MH	290	65	77%

Specifications

Weight: 2 ft: 2.5 lbs (1.2 kg) 4 ft: 5.8 lbs (2.6 kg) 8 ft: 12.5 lbs (5.7 kg)

Construction: One-piece polycarbonate housing with one-piece polycarbonate lens and stainless steel clips. The standard color is gray.

LED System: LED system with a life rating of ≥84,000 hours (HUV) L_{70} @25°C. Luminaire efficacy up to 140 LPW.

Electrical: Offered in 20, 25, 40, 50 and 65 Watts, the luminaire is designed to operate through the 120V-277VAC universal voltage and 347-480VAC high universal voltage range. The LED driver has a 2.5kV inherent surge suppression and is a constant current device, meeting UL1310 and UL48 Class 2 with built-in over temperature protection. The power factor is ≥90% and THD is ≤20%.

Dimming: The driver is 0-10V dimmable (down to 6%). Please reference the dimmer compatibility document (LEDLUM012).

Color Characteristics: CRI>80; CCT of 4000K or 5000K.

Optics: Type V distribution with a clear etched polycarbonate lens or optional diffuse lens (sold separately).

Installation: Luminaire mounts to recessed outlet box or can be surface or chain mounted (chain not included). Connector available for tandem wiring. External controls can be added through existing knockouts.

Operating Temperature: -40°F to +122°F (-40°C to +50°C);
EM: +14°F to +122°F (-10°C to +50°C).

Listings: cULus listed to UL1598 standards for wet locations, IP65 or IP66 rated, and ETL Sanitation listed for NSF splash zones.

Warranty: Standard 5-year luminaire warranty (LEDLUM001).

Note: Specifications subject to change without notice. IES files available online.

*Please see pages 2 and 3 for DLC listings.

Ordering Guide

Item Number:

VAPOR	XX	/	XXX	XXX	D	8	XX	/	XX	XX	/	GR	/	XX
Product Name	Generation		Wattage	Voltage	Dimming	CRI	Color Temp (CCT)		Size	Optics		Color/Finish		Options
VAPOR	1A		020 = 20 Watts	UNV = 120-277V	D = 0-10V	8≥80	40 = 4000K		24 = 24" long	EC = Etched Lens		GR = Gray		Blank = No Option
	1B		025 = 25 Watts	HUV = 347-480V*			50 = 5000K		48 = 48" long	Type V Distribution				D = Motion/Daylighting Sensor
	2B		040 = 40 Watts						96 = 96" long					E = Emergency
			050 = 50 Watts											
			065 = 65 Watts											

*HUV version only available in 50W

Photometric Data

2 ft VAPOR1A/025UNVD840
Isofootcandle Lines at 15' Mounting Height

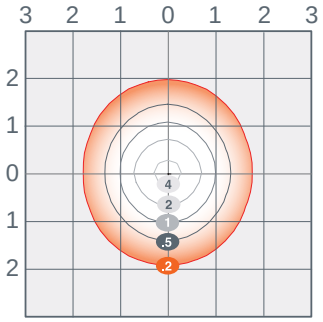

For other mounting heights apply the following multipliers:

Mounting Height	10'	12'	15'	18'	20'
Multiplier	2.25	1.56	1.00	0.44	0.36

4 ft VAPOR1B/040UNVD840
Isofootcandle Lines at 12' Mounting Height

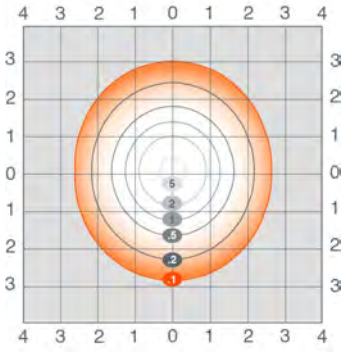

8 ft VAPOR1B/040UNVD840
Isofootcandle Lines at 12' Mounting Height

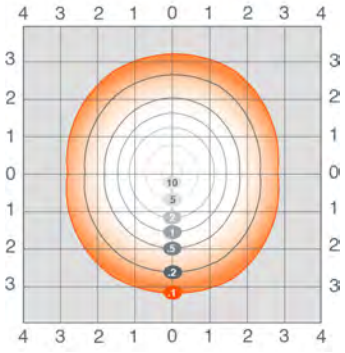

For other mounting heights apply the following multipliers:

Mounting Height	8'	10'	12'	15'	16'	18'
Multiplier	2.25	1.44	1.00	0.73	0.56	0.44

*For 20W use 0.5 multiplier

Fixture Spacing Chart

	VAPOR1A/025UNVD840/24EC/GR			VAPOR1B/040UNVD840/48EC/GR		
	On Center Fixture Spacing			On Center Fixture Spacing		
	8'x10'	10'x10'	10'x12'	8'x10'	10'x10'	10'x12'
8'	39	29	23.2	65.6	51.2	40.2
10'	37.9	28.1	22.5	63.6	49.9	39.2
12'	35.2	27.3	21.9	63.4	48.3	38.1
14'	34.2	26.6	21.3	61.7	47.3	37.2
16'	33.2	25.6	20.7	55.5	46.3	36.2
18'	32.3	24.9	20.1	53.9	44.7	35.3

Average Illuminance (fc) at 0" AFF.
80/50/20 reflectances.

Options Information

Sensor: Motion and Daylight sensors are both available.
Motion Sensor (Default Setting):

Motion	100% lumen output
≥5min with no motion	30% lumen output
≥60min with no motion	Off

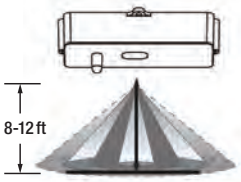

Height of Installation: 8-12 ft

Detection Range
Height of installation: 8ft

Daylight (Default Setting): 5fc/24H

For customized settings: Purchase remote control separately and refer to the Vapor Tight Remote document LEDLUM015 for further instructions.

Emergency Battery Backup:
Activates when normal power supply to the fixture fails, providing a minimum of 500 lumens for at least 90 minutes.

Ordering Information

Item Number	Ordering Abbreviation	Ingress Protection	Power (W)	Input Voltage	Color Temp (CCT)	Total Fixture Lumens Clear Lens	Total Fixture Lumens Diffuse Lens	LPW* Clear Lens	LPW* Diffuse Lens	DLC** Clear Lens	DLC** Diffuse Lens	Options
2ft Vapor Tight												
74530	VAPOR1A/025UNVD840/24EC/GR	IP65	25	120-277	4000K	3100	2800	135	121	Prm	Std	–
74531	VAPOR1A/025UNVD850/24EC/GR	IP65	25	120-277	5000K	3100	2800	137	123	Prm	Std	–
74532	VAPOR1B/025UNVD840/24EC/GR/D	IP65	25	120-277	4000K	3100	2800	135	121	Prm	–	Sensor
74533	VAPOR1B/025UNVD850/24EC/GR/D	IP65	25	120-277	5000K	3100	2800	137	123	Prm	–	Sensor
60074	VAPOR1B/025UNVD840/24EC/GR/E	IP65	25	120-277	4000K	3100	2800	135	121	Prm	–	Emergency
60075	VAPOR1B/025UNVD850/24EC/GR/E	IP65	25	120-277	5000K	3100	2800	137	123	Prm	–	Emergency
4ft Vapor Tight												
74534	VAPOR1B/020UNVD840/48EC/GR	IP65	20	120-277	4000K	2500	2300	130	114	Prm	–	–
74535	VAPOR1B/020UNVD850/48EC/GR	IP65	20	120-277	5000K	2500	2300	130	115	Prm	–	–
74536	VAPOR1B/020UNVD840/48EC/GR/D	IP65	20	120-277	4000K	2500	2300	130	114	Prm	–	Sensor
74537	VAPOR1B/020UNVD850/48EC/GR/D	IP65	20	120-277	5000K	2500	2300	130	115	Std	–	Sensor
60043	VAPOR1B/020UNVD840/48EC/GR/E	IP65	20	120-277	4000K	2500	2300	130	114	Prm	–	Emergency
60044	VAPOR1B/020UNVD850/48EC/GR/E	IP65	20	120-277	5000K	2500	2300	130	115	Prm	–	Emergency
60045	VAPOR1B/020UNVD840/48EC/GR/DE	IP65	20	120-277	4000K	2500	2300	130	114	Prm	–	Sensor, Emergency
60046	VAPOR1B/020UNVD850/48EC/GR/DE	IP65	20	120-277	5000K	2500	2300	130	115	Prm	–	Sensor, Emergency
74376	VAPOR1B/040UNVD840/48EC/GR	IP65	40	120-277	4000K	5300	4600	139	120	Prm	Std	–
74377	VAPOR1B/040UNVD850/48EC/GR	IP65	40	120-277	5000K	5300	4700	137	122	Prm	Std	–
74378	VAPOR1B/040UNVD840/48EC/GR/D	IP65	40	120-277	4000K	5400	4500	140	116	Prm	Std	Sensor
74379	VAPOR1B/040UNVD850/48EC/GR/D	IP65	40	120-277	5000K	5400	4600	137	119	Prm	Std	Sensor
74554	VAPOR1B/040UNVD840/48EC/GR/E	IP65	40	120-277	4000K	5300	4600	139	120	Prm	Std	Emergency
74555	VAPOR1B/040UNVD850/48EC/GR/E	IP65	40	120-277	5000K	5300	4700	137	122	Prm	Std	Emergency
74556	VAPOR1B/040UNVD840/48EC/GR/DE	IP65	40	120-277	4000K	5400	4500	140	116	Prm	Std	Sensor, Emergency
74557	VAPOR1B/040UNVD850/48EC/GR/DE	IP65	40	120-277	5000K	5400	4600	137	119	Prm	Std	Sensor, Emergency
74552	VAPOR1A/050HUVD840/48EC/GR	IP65	50	347-480	4000K	5700	–	111	–	Std	–	–
74553	VAPOR1A/050HUVD850/48EC/GR	IP65	50	347-480	5000K	5700	–	111	–	Std	–	–
60047	VAPOR2B/040UNVD840/48EC/GR	IP66	40	120-277	4000K	5300	4600	139	120	Prm	–	–
60048	VAPOR2B/040UNVD850/48EC/GR	IP66	40	120-277	5000K	5300	4700	137	122	Prm	–	–
60049	VAPOR2B/040UNVD840/48EC/GR/D	IP66	40	120-277	4000K	5300	4600	139	120	Prm	–	Sensor
60050	VAPOR2B/040UNVD850/48EC/GR/D	IP66	40	120-277	5000K	5300	4700	137	122	Prm	–	Sensor
8ft Vapor Tight												
60355	VAPOR1B/065UNVD840/96EC/GR	IP65	65	120-277	4000K	8625	–	130	–	Prm	–	–
60356	VAPOR1B/065UNVD850/96EC/GR	IP65	65	120-277	5000K	8625	–	130	–	Prm	–	–
60357	VAPOR1B/065UNVD840/96EC/GR/D	IP65	65	120-277	4000K	8625	–	130	–	Prm	–	Sensor
60358	VAPOR1B/065UNVD850/96EC/GR/D	IP65	65	120-277	5000K	8625	–	130	–	Prm	–	Sensor
60359	VAPOR1B/065UNVD840/96EC/GR/E	IP65	65	120-277	4000K	8625	–	130	–	Prm	–	Emergency
60360	VAPOR1B/065UNVD850/96EC/GR/E	IP65	65	120-277	5000K	8625	–	130	–	Prm	–	Emergency
60361	VAPOR1B/065UNVD840/96EC/GR/DE	IP65	65	120-277	4000K	8625	–	130	–	Prm	–	Sensor, Emergency
60362	VAPOR1B/065UNVD850/96EC/GR/DE	IP65	65	120-277	5000K	8625	–	130	–	Prm	–	Sensor, Emergency

*LPW per LM79 Report
**Std for DLC Standard, Prm for DLC Premium

Accessories and Replacement Parts

Item Number	Ordering Abbreviation	Item Description
74310	VAPOR1A/REMOTE	Vapor Tight Sensor Remote compatible with VAPOR1A
74541	VAPOR1B/REMOTE	Vapor Tight Sensor Remote compatible with VAPOR1B and VAPOR2B
74744	VAPOR1X/LENS/24D5	2ft Diffused Lens
74538	VAPOR1X/LENS/48D5	4ft Diffused Lens
74448	VAPOR1A/LENS/48EC	4ft Replacement Lens
74920	VAPOR1A/CONN/BL	Tandem Wiring Connector

DLC Listings

Item Number	Ordering Abbreviation	Linear Ambient Diffuse Lens	Clear Lens	Stairwell / Passageway Clear Lens	Low-Bay Clear Lens
2ft Vapor Tight					
74530	VAPOR1A/025UNVD840/24EC/GR	PQSP91E8	PSN1FP79		
74531	VAPOR1A/025UNVD850/24EC/GR	P9UFMJP1	PPUEJ3FK		
74532	VAPOR1B/025UNVD840/24EC/GR/D		PLBOXGMOBHHJ	PLZSC43CSRQF	
74533	VAPOR1B/025UNVD850/24EC/GR/D		PL8DCUUOY1VL	PLWHK8GPPC0R	
60074	VAPOR1B/025UNVD840/24EC/GR/E		PLBOXGMOBHHJ		
60075	VAPOR1B/025UNVD850/24EC/GR/E		PL8DCUUOY1VL		
4ft Vapor Tight					
74534	VAPOR1B/020UNVD840/48EC/GR		PL5DXDVCKDJH		
74535	VAPOR1B/020UNVD850/48EC/GR		PLYZ34VCFSSD		
74536	VAPOR1B/020UNVD840/48EC/GR/D		PL5DXDVCKDJH	PL5HDWS27PWW	
74537	VAPOR1B/020UNVD850/48EC/GR/D		PLYZ34VCFSSD	PLZ8CGRK3SA9	
60043	VAPOR1B/020UNVD840/48EC/GR/E		PL5DXDVCKDJH		
60044	VAPOR1B/020UNVD850/48EC/GR/E		PLYZ34VCFSSD		
60045	VAPOR1B/020UNVD840/48EC/GR/DE		PL5DXDVCKDJH	PL5HDWS27PWW	
60046	VAPOR1B/020UNVD850/48EC/GR/DE		PLYZ34VCFSSD	PLZ8CGRK3SA9	
74376	VAPOR1B/040UNVD840/48EC/GR	PTNPGMPP	PVYCF6UR		PL265J2ZG4BX
74377	VAPOR1B/040UNVD850/48EC/GR	P39VVY2Z	PC3PTT8W		PLGMT90DHZ8X
74378	VAPOR1B/040UNVD840/48EC/GR/D	PTNPGMPP	PVYCF6UR	PL400DXSACYY	PLQA58KMPQMB
74379	VAPOR1B/040UNVD850/48EC/GR/D	P39VVY2Z	PC3PTT8W	PLULT610E924	PLIBALW4B8DL
74554	VAPOR1B/040UNVD840/48EC/GR/E	PTNPGMPP	PVYCF6UR		PLV9L811KFZM
74555	VAPOR1B/040UNVD850/48EC/GR/E	P39VVY2Z	PC3PTT8W		PLRJST3769ZE
74556	VAPOR1B/040UNVD840/48EC/GR/DE	PTNPGMPP	PVYCF6UR	PL400DXSACYY	PLFBW1Q0WD8P
74557	VAPOR1B/040UNVD850/48EC/GR/DE	P39VVY2Z	PC3PTT8W	PLULT610E924	PLT0KXPJYIOU
74552	VAPOR1A/050HUVD840/48EC/GR	PTNPGMPP	PBA4FDDB		
74553	VAPOR1A/050HUVD850/48EC/GR	P39VVY2Z	PQGF9FAQ		
60047	VAPOR2B/040UNVD840/48EC/GR		PLM0UBQCY36H		PLGY7W2TNJYI
60048	VAPOR2B/040UNVD850/48EC/GR		PLUL4LZWX42N		PLZDL7D8MYI8
60049	VAPOR2B/040UNVD840/48EC/GR/D		PLM0UBQCY36H	PL4PJB186SR2	PLYGHMU3R7OF
60050	VAPOR2B/040UNVD850/48EC/GR/D		PLUL4LZWX42N	PLI1BBN5V4JD	PLUTO7OLBDID
8ft Vapor Tight					
60355	VAPOR1B/065UNVD840/96EC/GR		PLIIQO3MOQOU		
60356	VAPOR1B/065UNVD850/96EC/GR		PLKH42XGYH09		
60357	VAPOR1B/065UNVD840/96EC/GR/D		PLIIQO3MOQOU		
60358	VAPOR1B/065UNVD850/96EC/GR/D		PLKH42XGYH09		
60359	VAPOR1B/065UNVD840/96EC/GR/E		PLIIQO3MOQOU		
60360	VAPOR1B/065UNVD850/96EC/GR/E		PLKH42XGYH09		
60361	VAPOR1B/065UNVD840/96EC/GR/DE		PLIIQO3MOQOU		
60362	VAPOR1B/065UNVD850/96EC/GR/DE		PLKH42XGYH09		

*LPW per LM79 Report
**Std for DLC Standard, Prm for DLC Premium

LEDVANCE LLC
200 Ballardvale Street
Wilmington, MA 01887 USA
Phone 1-800-LIGHTBULB (1-800-544-4828)
www.sylvania.com

SYLVANIA and LEDVANCE are registered trademarks.
All other trademarks are those of their respective owners.
Licensee of product trademark SYLVANIA in general lighting.
Specifications subject to change without notice.

/sylvania /sylvania

© 2018 LEDVANCE LLC

SYLVANIA Luminaires

High Bay

Catalog #	Type
Project	
Notes	
Date	
Prepared by	

Dimensions

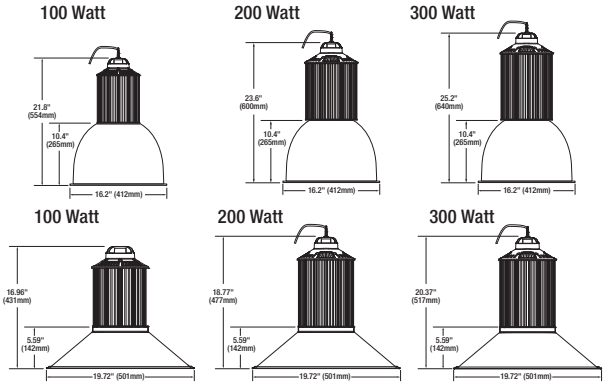

Dimensions are in inches (mm).

Product Features

- Lightweight, impact resistant fixture is designed for easy and safe installation
- Traditional design with multiple optic choices that enhance lumen output
- 1 for 1 replacement up to 1000W MH/HPS fixture and wide operating temperature

Wattage Comparison Chart

Traditional Source	Traditional System Wattage	LED System Wattage	Energy Savings
250W MH	290	100	66%
250W HPS	295	100	66%
320W MH	370	200	46%
400W HPS	460	200	57%
400W MH	450	200	56%
750W MH	820	300	63%
750W HPS	840	300	64%
1000W MH	1080	300	72%
1000W HPS	1100	300	73%

Specifications

Weight: **100W:** UNV: 9.5lbs (4.3kg) HUV: 10.3lbs (4.7kg)
200W: UNV: 12.5lbs (5.7kg) HUV: 13lbs (5.9kg)
300W: UNV: 15.5lbs (7kg) HUV: 16lbs (7.3kg)

Construction: Two-piece cast, low copper (<0.4% Cu) aluminum alloy with powder coat paint and IK08 UV stabilized polycarbonate refractor or aluminum reflector. The standard color is gray.

LED System: LED system with a life rating of ≥63,000 hours (100W and 347V versions), ≥73,000 hours (300W versions), or ≥150,000 hours (200W and HUV versions) at L_{70} @25°C. Luminaire efficacy up to 125 LPW.

Electrical: Offered in 100, 200 and 300 Watts, the luminaire is designed to operate through 120-277, 347 or 347-480 VAC voltage. The LED driver has a 4kV inherent surge suppression and is a constant current device, meeting UL1310 and UL48 Class 1 with built-in over temperature protection. The power factor is ≥90% and THD is ≤20%.

Dimming: The driver is 0-10V dimmable (down to 16%). Please reference the dimmer compatibility document (LEDLUM012).

Color Characteristics: CRI>80; CCT of 3500K, 4000K or 5000K.

Optics: Type V distribution with a 16 inch polycarbonate open refractor. (Bottom lens accessory available.) Type V distribution with a 20 inch aluminum reflector.

Installation: Luminaire mounts via hook with 6-foot flying lead cable (included).

Operating Temperature: 100W/200W (UNV/HUV): -40°F to +122°F (-40°C to +50°C).
300W: -40°F to +104°F (-40°C to +40°C).

Listings: cULus listed to UL1598 standards for damp locations.

Warranty: Standard 5-year luminaire warranty (LEDLUM001).

Note: Specifications subject to change without notice. IES files available online.

c UL us LISTED RoHS compliant FC DLC *

* See page 2 for DLC listings.

Ordering Guide

Item Number:

HIBAY	1A	/	XXX	XXX	D	8	XX	/	GR	/	X
Product Name	Generation		Wattage	Voltage	Dimming	CRI	Color Temp (CCT)		Color/Finish		Options
HIBAY	1A		100 = 100 Watts 200 = 200 Watts 300 = 300 Watts	UNV = 120-277V HUV = 347-480V	D = 0-10V	8 = >80	35 = 3500K* 40 = 4000K 50 = 5000K		GR = Gray		Blank = No Options E = Emergency**

*Available for 100 and 200W only
**Available for 200W only

Photometric Data (UNV/347V/HUV)

HIBAY1A/100UNVD850
Isofootcandle Lines at 20' Mounting Height

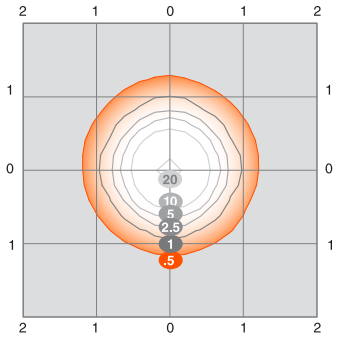

HIBAY1A/200UNVD850
Isofootcandle Lines at 20' Mounting Height

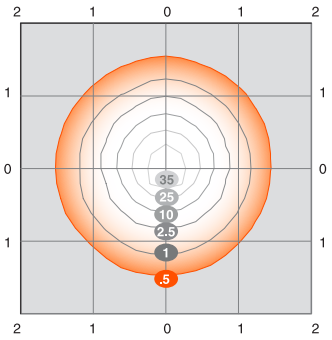

HIBAY1A/300UNVD850
Isofootcandle Lines at 30' Mounting Height

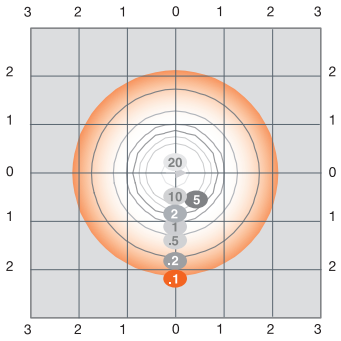

For other mounting heights apply the following multipliers:

Mounting Height	18'	20'	22'	25'	30'
Multiplier	1.23	1.00	0.83	0.64	0.44

Mounting Height	18'	20'	22'	25'	30'
Multiplier	1.23	1.00	0.83	0.64	0.44

Mounting Height	22'	25'	30'	32'	35'
Multiplier	1.86	1.44	1.00	0.88	0.73

*Photometric data based on housing with refractor.

Ordering Information

Housing (A)

Item Number	Ordering Abbreviation	Power (W)	Input Voltage	Dimming	CRI	Color Temp (CCT)	Total Fixture Lumens Refractor	Total Fixture Lumens Reflector	LPW* Refractor	LPW* Reflector	DLC** Refractor	DLC** Reflector	Options
60101	HIBAY1A/100UNVD835/GR(MTO)†	100	120-277V	0-10V	>80	3500K	11,300	11,200	120	119	Std	Std	–
74230	HIBAY1A/100UNVD840/GR	100	120-277V	0-10V	>80	4000K	10,800	11,000	108	108	Std	Std	–
74231	HIBAY1A/100UNVD850/GR	100	120-277V	0-10V	>80	5000K	10,800	10,800	108	108	Std	Std	–
60102	HIBAY1A/200UNVD835/GR(MTO)†	200	120-277V	0-10V	>80	3500K	21,900	21,900	111	111	Std	Std	–
74232	HIBAY1A/200UNVD840/GR	200	120-277V	0-10V	>80	4000K	22,200	22,500	114	116	Std	Std	–
74233	HIBAY1A/200UNVD850/GR	200	120-277V	0-10V	>80	5000K	22,500	22,900	115	116	Std	Std	–
74515	HIBAY1A/200UNVD840/GR/E	200	120-277V	0-10V	>80	4000K	22,200	22,500	114	116	Std	Std	Emergency
74516	HIBAY1A/200UNVD850/GR/E	200	120-277V	0-10V	>80	5000K	22,500	22,900	115	116	Std	Std	Emergency
71731	HIBAY1A/300UNVD840/GR	300	120-277V	0-10V	>80	4000K	33,300	34,200	109	112	Std	Std	–
71732	HIBAY1A/300UNVD850/GR	300	120-277V	0-10V	>80	5000K	33,700	34,800	110	113	Std	Std	–
74509	HIBAY1A/100HUVD840/GR	100	347-480V	0-10V	>80	4000K	10,800	10,500	108	109	Std	Std	–
74510	HIBAY1A/100HUVD850/GR	100	347-480V	0-10V	>80	5000K	10,800	10,900	108	114	Std	Std	–
74511	HIBAY1A/200HUVD840/GR	200	347-480V	0-10V	>80	4000K	23,300	23,700	123	125	Std	Std	–
74512	HIBAY1A/200HUVD850/GR	200	347-480V	0-10V	>80	5000K	23,100	23,400	122	124	Std	Std	–
60147	HIBAY1A/300HUVD840/GR	300	347-480V	0-10V	>80	4000K	33,000	34,000	110	110	Std	Std	–
60148	HIBAY1A/300HUVD850/GR	300	347-480V	0-10V	>80	5000K	33,000	34,000	110	110	Std	Std	–

*LPW per LM79 report.
**Std for DLC Standard.
†Made to Order, contact Sales rep for details.

Optics (B or C)

Item Number	Ordering Abbreviation	Item Description	Optic
74234	HIBAY1A/16H5	16 inch Polycarbonate Refractor (IK08)	B
74395	HIBAY1A/20AL5	20 inch Aluminum Reflector	C

Housing (A) + Optics (B or C) =

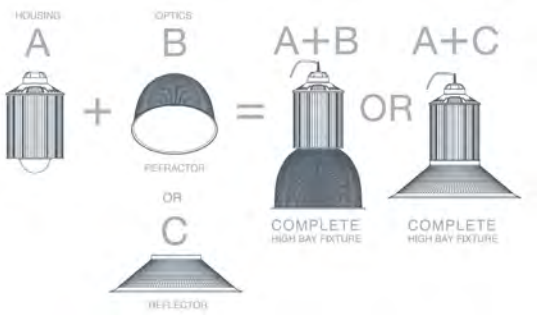

Accessories and Replacement Parts

Item Number	Ordering Abbreviation	Item Description
74449	HIBAY1A/BOTTOMLENS/16H5	Refractor Bottom Lens

LEDVANCE LLC
200 Ballardvale Street
Wilmington, MA 01887 USA
Phone 1-800-LIGHTBULB (1-800-544-4828)
www.sylvania.com

SYLVANIA and LEDVANCE are registered trademarks.
All other trademarks are those of their respective owners.
Licensee of product trademark SYLVANIA in general lighting.
Specifications subject to change without notice.

/sylvania /sylvania

© 2018 LEDVANCE LLC

ULTRA LED™ Glass PAR Lamps

Glass Housing Design

The new aesthetically pleasing design of the ULTRA LED Glass PAR lamps make halogen retrofits easier to spot relamp to a more energy efficient lamp. Replacements for 50, 75, 100, 120 watt halogen lamps providing up to 87% energy savings and longer life up to 25,000 hours (L_{70}). These lamps can be used in many applications and are wet location rated and perfect for outdoor applications. All lamps are RoHS compliant, contain no mercury and emit no UV or IR radiation.

Key Features & Benefits

- Up to 83 LPW
- Dimmable*
- Long life up to 25,000 hours (L_{70})
- Color temperature available in 2700K, 3000K, 4000K and 5000K
- CRI >80
- Energy savings up to 87%
- Longer life than traditional halogen lamps
- No warm-up time, instant on with full light output and stable color
- Ideal for re-lamping when halogen lamps reach end of life
- Glass body with full optics – similar to halogen PAR lamps
- UL Wet rated
- Rated for use in enclosed fixtures
- ETL Food Safe Listed

* Performance may vary depending on dimmer used in application. Please refer to Dimmer Compatibility List (RETRO-DIM) for a list of compatible dimmers or visit www.SYLVANIA.com/LEDRetrofit

c UL us LISTED · Intertek · RoHS compliant · Hg · ENERGY STAR

Product Offering

Ordering Abbreviation	Wattage	Beam Angle	Color Temperature	CRI
LED PAR20	7	25° & 40°	2700K, 3000K, 4000K & 5000K	82*
LED PAR30	10	25° & 40°	3000K	82
LED PAR30LN	10**	25° & 40°	2700K, 3000K, 4000K & 5000K	82
LED PAR38	14***	12°, 25° & 40°	2700K, 3000K, 4000K & 5000K	82
LED PAR38	16	25° & 40°	3000K & 5000K	82

*81 CRI for 5000K
**11W for 5000K
***13W for 5000K

Application Information

Applications

- General lighting
- Recessed downlights
- Track lighting
- Wall washer

Market Segments

- Hospitality
- Offices
- Property management
- Residential
- Restaurants
- Retail
- Schools

Application Notes

1. Operating temperature -20°C to +45°C (-4°F to 113°F).
2. Not for use with emergency light fixtures or exit lights.
3. Suitable for wet locations.
4. Rated for use in enclosed fixtures.

This device complies with part 15 of the FCC Rules. Operation is subject to the following two conditions: (1) This device may not cause harmful interference, and (2) this device must accept any interference received, including interference that may cause undesired operation. For FCC Part 15 user information, please see www.sylvania.com/fcc15b.

SYLVANIA

Specification Data

Catalog #	Type
Project	
Comments	
Prepared by	

Ordering Information

Item Number	Ordering Abbreviation	Wattage (W)	Base Type	Replaces	Input Voltage (V)	Beam Angle	CBCP	Average Rated Life (hrs.)[1]	CCT[2]	CRI[3]	Typical Lumens (lm)[4]	Power Factor	ENERGY STAR®
78349	LED7PAR20/DIM/827/NFL25/22Y/GL3/W/RP	7	Medium	50W	120V	25	1700	25,000	2700K	82	525	0.95	Yes
78350	LED7PAR20/DIM/827/FL40/22YGL3/W/RP	7	Medium	50W	120V	40	1200	25,000	2700K	82	525	0.95	Yes
78347	LED7PAR20/DIM/830/NFL25/22Y/GL3/W/RP	7	Medium	50W	120V	25	1700	25,000	3000K	82	525	0.95	Yes
78348	LED7PAR20/DIM/830/FL40/22Y/GL3/W/RP	7	Medium	50W	120V	40	1200	25,000	3000K	82	525	0.95	Yes
78346	LED7PAR20/DIM/840/FL40/22Y/GL3/W/RP	7	Medium	50W	120V	40	1200	25,000	4000K	82	525	0.95	Yes
74777	LED7PAR20/DIM/850/FL40/13Y/GL/W/RP	7	Medium	50W	120V	40	700	15,000	5000K	81	550	0.95	Yes
79784	LED10PAR30/DIM/830/FL40/22Y/GL3/W/RP	10	Medium	75W	120V	40	1500	25,000	3000K	82	825	0.95	Yes
79783	LED10PAR30/DIM/830/NFL25/22Y/GL3/W/RP	10	Medium	75W	120V	25	3200	25,000	3000K	82	825	0.95	Yes
78251	LED10PAR30LN/DIM/827/NFL25/22Y/GL3/W/RP	10	Medium	75W	120V	25	3200	25,000	2700K	82	825	0.95	Yes
78252	LED10PAR30LN/DIM/827/FL40/22Y/GL3/W/RP	10	Medium	75W	120V	40	1500	25,000	2700K	82	825	0.95	Yes
78249	LED10PAR30LN/DIM/830/NFL25/22Y/GL3/W/RP	10	Medium	75W	120V	25	3200	25,000	3000K	82	825	0.95	Yes
78250	LED10PAR30LN/DIM/830/FL40/22Y/GL3/W/RP	10	Medium	75W	120V	40	1500	25,000	3000K	82	825	0.95	Yes
78248	LED10PAR30LN/DIM/840/FL40/22Y/GL3/W/RP	10	Medium	75W	120V	40	1500	25,000	4000K	82	825	0.95	Yes
74603	LED11PAR30LN/DIM/850/FL40/13Y/GL/W/RP	11	Medium	75W	120V	40	1375	15,000	5000K	82	850	0.95	Yes
74944	LED14PAR38/DIM/827/NFL25/22Y/GL3/W/RP	14	Medium	100W	120V	25	5500	25,000	2700K	82	1050	0.95	Yes
74945	LED14PAR38/DIM/827/FL40/22Y/GL3/W/RP	14	Medium	100W	120V	40	2400	25,000	2700K	82	1050	0.95	Yes
74036	LED14PAR38/DIM/830/SP12/GL1/W/RP	14	Medium	100W	120V	12	14,000	25,000	3000K	82	1050	0.95	Yes
74942	LED14PAR38/DIM/830/NFL25/22Y/GL3/W/RP	14	Medium	100W	120V	25	5500	25,000	3000K	82	1050	0.95	Yes
74943	LED14PAR38/DIM/830/FL40/22Y/GL3/W/RP	14	Medium	100W	120V	40	2400	25,000	3000K	82	1050	0.95	Yes
74946	LED14PAR38/DIM/840/FL40/22Y/GL3/W/RP	14	Medium	100W	120V	40	2400	25,000	4000K	82	1050	0.95	Yes
74948	LED13PAR38/DIM/850/FL40/13Y/GL/W/RP	13	Medium	100W	120V	40	1800	15,000	5000K	82	1050	0.95	Yes
74940	LED16PAR38/DIM/830/NFL25/22Y/GL3/W/RP	16	Medium	120W	120V	25	6500	25,000	3000K	82	1300	0.95	Yes
74941	LED16PAR38/DIM/830/FL40/22Y/GL3/W/RP	16	Medium	120W	120V	40	3200	25,000	3000K	82	1300	0.95	Yes
74950	LED16PAR38/DIM/850/FL40/13Y/GL/W/RP	16	Medium	120W	120V	40	2300	15,000	5000K	82	1300	0.95	Yes

1. Hours lifetime with 70% lumen maintenance 2. Thermally stable typical CCT (±10%) 3. CRI – Color Rendering Index (typical) 4. Thermally stable typical lumens (±10%)

Note: 78349 replaces 78982, 78350 replaces 78983, 78347 replaces 78980, 78348 replaces 78981, 78346 replaces 78978, 74777 replaces 74053, 79784 replaces 79273, 79783 replaces 79373, 78251 replaces 78229, 78252 replaces 78230, 78249 replaces 78227, 78250 replaces 78228, 78248 replaces 78224, 74603 replaces 74059, 74944 replaces 74035, 74945 replaces 74037, 74942 replaces 74032, 74943 replaces 74043, 74946 replaces 74088, 74948 replaces 74064, 74940 replaces 74052, 74941 replaces 74070, 74950 replaces 74068.

Ordering Guide

LED	14	PAR38	/	DIM	/	8	30	/	FL	40	/	22Y	/	GL3	/	W
LED Lamps and Retrofits	Wattage: 7, 10, 14, 16	Lamp Type: PAR38 PAR30LN PAR30 PAR20		Dimmable		CRI = 80+	Color Temperature 2700K, 3000K 4000K, 5000K		Flood	Beam Angle 12°, 25° 40°		25,000 hours life		Glass Lamps		Wet Rated

Energy Savings

Basic Product Description	LED Life (hrs.)	Similar Halogen	Halogen Life (hrs.)	Watts Saved	Energy Savings*	LED Life vs. Incandescent
LED 7W PAR20	25,000	50W	2,500	43	$118.25	10X
LED 10W PAR30	25,000	75W	2,500	65	$178.75	10X
LED 10W PAR30LN	25,000	75W	2,500	65	$178.75	10X
LED 14W PAR38	25,000	100W	2,500	76	$236.50	10X
LED 16W PAR38	25,000	120W	2,500	104	$286.00	10X

* Energy savings over the life of the lamp calculated at $0.11/kWh

Lamp Dimensions

	(A) MOL inches	(B) Diameter inches
LED PAR20	3.27 in	2.51 in
LED PAR30	3.34 in	3.74 in
LED PAR30LN	4.44 in	3.74 in
LED PAR38	5.11 in	4.80 in

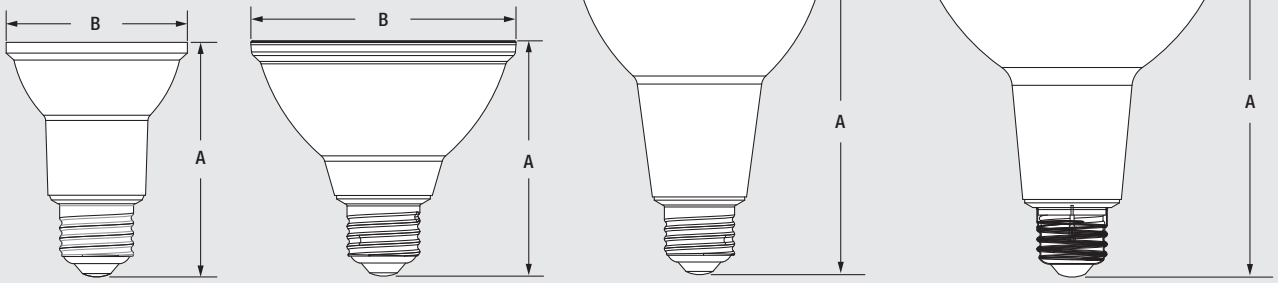

LEDVANCE LLC
200 Ballardvale Street
Wilmington, MA 01887 USA
Phone 1-800-LIGHTBULB (1-800-544-4828)
www.sylvania.com

SYLVANIA and LEDVANCE are registered trademarks.
All other trademarks are those of their respective owners.
Licensee of product trademark SYLVANIA in general lighting.
Specifications subject to change without notice.

/sylvania /sylvania

© 2018 LEDVANCE LLC

ULTRA LED™ Premium Dimmable Reflector Lamps

Changes from white to soothing candlelight

SYLVANIA ULTRA LED Premium Dimmable Reflector lamps allow control of energy usage, light output and color temperature. These lamps offer dimming characteristics similar to incandescent lamps with color temperature shifting from 3000K to 2000K as the lamp dims. The warmer color temperature at lower light levels allows you to create a comfortable, relaxing environment ideal for hospitality applications. Premium Dimmable LED lamps are dimmable down to 10% on compatible phase-cut dimmers and the perfect lamps when you need to change the environment from a bright white light to warm and cozy.

Key Features & Benefits

- Reduction in color temperature from 3000K to 2000K as lamp dims
- Dimmable down to 10%*
- Long life: up to 25,000 hours (L_{70})
- Power factor >.95
- UV and IR free
- Mercury and lead free
- Good color consistency within a 4-step MacAdam ellipse
- Suitable for damp locations
- Reduction in energy consumption up to 86%
- Lasts up to 12.5 times longer than halogen and incandescent lamps
- No warm-up time, instant-on with full light and stable color

* Performance may vary depending on dimmer used in application. Please refer to Dimmer Compatibility List (RETRO-DIM) for a list of compatible dimmers or visit www.SYLVANIA.com/LEDRetrofit

Product Offering

Product Description	Wattage	Color Temperature
LEDR20	6.5	3000K
LEDBR30	10	3000K
LEDBR40	13	3000K

Application Information

Applications

- Recessed downlighting
- Track lighting
- Wall washing

Market Segments

- Art galleries and museums
- Healthcare
- Hospitality
- Offices
- Residential
- Restaurants
- Retail

Application Notes

1. Operating temperatures -4°F and 104°F (-20°C and 40°C)
2. Suitable for outdoor use when used in a UL rated fixture where protected from the weather
3. Use in a fixture that supports a 2 lb. lamp
4. Not for use with emergency lighting
5. Use in open fixtures

This device complies with part 15 of the FCC Rules. Operation is subject to the following two conditions: (1) This device may not cause harmful interference, and (2) this device must accept any interference received, including interference that may cause undesired operation. For FCC Part 15 user information, please see www.sylvania.com/fcc15b.

Specification Data

Catalog #	Type
Project	
Comments	
Prepared by	

Ordering Information

Item Number	Ordering Abbreviation	Wattage (W)	Base Type	Replaces	Input Voltage (VAC)	Average Rated Life (hrs.)	CCT	Typical Lumens (lm)	CRI	Power Factor	ENERGY STAR®
79618	LED6.5R20DIMSE830G5RP	6.5	Medium	50W Incan.	120	25,000	3000K	525	80	.96	Yes
79619	LED10BR30DIMSE830G5RP	10	Medium	65W Incan.	120	25,000	3000K	800	80	.97	Yes
79620	LED13BR40DIMSE830G5RP	13	Medium	85W Incan.	120	25,000	3000K	1100	80	.97	Yes

Ordering Guide

LED	6.5	R20	/	DIM	/	SE	/	8	30	/	G5
LED Lamps	Wattage 6.5, 10, 13	Lamp Type R20, BR30, BR40		Dimmable		Sunset Effects		CRI >80	Color Temperature 3000K		5th Generation

Energy Savings

Basic Product Description	LED Life (hrs.)	Similar Halogen/Incan.	Halogen/Incan. Life (hrs.)	Watts Saved	Energy Savings*	LED Life vs. Halogen Life
LED6.5R20SE	25,000	50WR20	2,000	43.5	$119.62	12.5x
LED10BR30SE	25,000	65WBR30	2,000	55	$151.25	12.5x
LED13BR40SE	25,000	85WBR40	2,000	72	$198.00	12.5x

*Energy savings over life of lamp calculated at $0.11/kWh

Lamp Dimensions

	(A) MOL (inches)	(B) Diameter (inches)
LEDR20	3.67	2.34
LEDBR30	5.00	3.74
LEDBR40	5.82	4.65

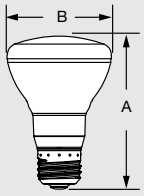

7R20

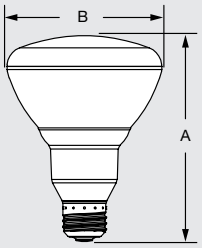

11BR30

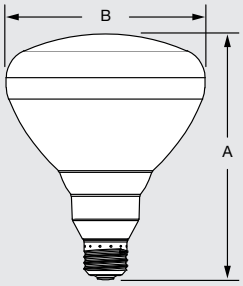

15BR40

LEDVANCE LLC
200 Ballardvale Street
Wilmington, MA 01887 USA
Phone 1-800-LIGHTBULB (1-800-544-4828)
www.sylvania.com

SYLVANIA and LEDVANCE are registered trademarks.
All other trademarks are those of their respective owners.
Licensee of product trademark SYLVANIA in general lighting.
Specifications subject to change without notice.

/sylvania /sylvania

© 2017 LEDVANCE LLC

ULTRA LED™ A-line Lamps

Omnidirectional

A19 | 16W A21 | 23W A21

Rated up to 15,000 hours at 70% lumen maintenance, SYLVANIA ULTRA LED A-line omnidirectional lamps offer years of service and reduce energy and maintenance costs. SYLVANIA ULTRA LED lamps are environmentally preferred products. They are RoHS compliant and contain no mercury, lead or other hazardous materials. They emit no UV or IR radiation. A CRI of 80 ensures good color definition and 2700K, 3000K, 3500K and 5000K color temperatures, these lamps can be used in many applications in both homes and businesses.

Key Features & Benefits

- Dimmable down to 10%*
- Long life: up to 15,000 hours (L_{70})
- UV and IR free
- Mercury and lead free
- RoHS compliant
- Available in 2700K, 3000K, 3500K and 5000K color temperatures
- Suitable for indoor/outdoor environments
- Reduces energy consumption up to 85%
- Last up to 20 times longer than incandescent lamps
- No warm-up time, instant-on with full light output and stable color

* Performance may vary depending on dimmer used in application. Please refer to Dimmer Compatibility List (RETRO-DIM) for a list of compatible dimmers or visit www.SYLVANIA.com/LEDRetrofit

Product Offering

Ordering Abbreviation	Wattage	Color Temperature	Typical Lumens
LED5.5W A19	5.5	2700K, 3000K & 5000K	450
LED9W A19	9	2700K, 3000K, 3500K & 5000K	800
LED12W A19	12	2700K, 3000K, 3500K & 5000K	1100
LED16W A21	16	2700K, 3500K & 5000K	1600
LED23W A21	23	2700K, 3000K & 5000K	2600

Application Information

Applications

- Downlights
- Pendant fixtures
- Table lamps
- Wall sconces

Market Segments

- Healthcare
- Hospitality
- Residential
- Retail

Application Notes

1. Operating temperature range between -20°C and +45°C (-4°F and + 113°F)
2. Not for use with emergency light fixtures or exit lights
3. 5.5W, 9W and 12W lamps are approved for totally enclosed fixtures. All other lamps are not for use in totally enclosed fixtures.
4. Suitable for damp locations

This device complies with part 15 of the FCC Rules. Operation is subject to the following two conditions: (1) This device may not cause harmful interference, and (2) this device must accept any interference received, including interference that may cause undesired operation. For FCC Part 15 user information, please see www.sylvania.com/fcc15b.

Specification Data

Catalog #	Type
Project	
Comments	
Prepared by	

Ordering Information

Item Number	Ordering Abbreviation	Wattage (W)	Base Type	Replaces	Input Voltage (V)	Average Rated Life (hrs.)	CCT	Typical Lumens (lm)	CRI	Bulb Finish	ENERGY STAR®
74688	LED5.5A19/DIM/O/827/U/B	5.5	Medium	40W	120	15,000	2700K	450	80	Frosted	Yes
74398	LED5.5A19/DIM/O/830/U	5.5	Medium	40W	120	15,000	3000K	450	80	Frosted	Yes
78068	LED5.5A19/DIM/O/850/U/B	5.5	Medium	40W	120	15,000	5000K	450	80	Frosted	Yes
74687	LED9A19/DIM/O/827/U/B	9	Medium	60W	120	15,000	2700K	800	80	Frosted	Yes
74399	LED9A19/DIM/O/830/U	9	Medium	60W	120	15,000	3000K	800	80	Frosted	Yes
78037	LED9A19/DIM/O/835/U/RP	9	Medium	60W	120	15,000	3500K	800	80	Frosted	Yes
78038	LED9A19/DIM/O/835/U/RP4	9	Medium	60W	120	15,000	3500K	800	80	Frosted	Yes
78066	LED9A19/DIM/O/850/U/B	9	Medium	60W	120	15,000	5000K	800	80	Frosted	Yes
74685	LED12A19/DIM/O/827/U/B	12	Medium	75W	120	15,000	2700K	1100	80	Frosted	Yes
40044	LED12A19/DIM/O/830/U/B	12	Medium	75W	120	15,000	3000K	1100	80	Frosted	Yes
71190	LED12A19/DIM/O835/U/B	12	Medium	75W	120	15,000	3500K	1100	80	Frosted	Yes
74426	LED12A19/DIM/O/835/U/RP	12	Medium	75W	120	15,000	3500K	1100	80	Frosted	Yes
74427	LED12A19/DIM/O/835/U/RP4	12	Medium	75W	120	15,000	3500K	1100	80	Frosted	Yes
74428	LED12A19/DIM/O/850/U/RP	12	Medium	75W	120	15,000	5000K	1100	80	Frosted	Yes
74689	LED16A21/DIM/O/827/U/B	16	Medium	100W	120	15,000	2700K	1600	80	Frosted	Yes
71194	LED16A21/DIM/O/835/U/RP	16	Medium	100W	120	15,000	3500K	1600	80	Frosted	Yes
73190	LED16A21/DIM/O/835/U/RP4	16	Medium	100W	120	15,000	3500K	1600	80	Frosted	Yes
74691	LED16A21/DIM/O/850/U/B	16	Medium	100W	120	15,000	5000K	1600	80	Frosted	Yes
79714	LED23A21/DIM/O/827/U/B	23	Medium	150W	120	15,000	2700K	2600	80	Frosted	Yes
79734	LED23A21/DIM/O/830/U/B	23	Medium	150W	120	15,000	3000K	2600	80	Frosted	Yes
79735	LED23A21/DIM/O/850/U/B	23	Medium	150W	120	15,000	5000K	2600	80	Frosted	Yes

Ordering Guide

LED	5.5	A19	/	DIM	/	O	/	8	27	/	U	/	RP
LED Lamps	Wattage	Lamp Type A19		Dimmable		Omnidirectional		CRI 8 = 80+	CCT 27 = 2700K 30 = 3000K 35 = 3500K 50 = 5000K		ULTRA		Retail Pack

Energy Savings

Basic Product Description	LED Life (hrs.)	LED Lumens	Similar Incandescent	Incandescent Life (hrs.)	Incandescent Lumens	Watts Saved	Energy Savings*	LED Life vs. Incandescent
LED5.5A19	15,000	450	40W A19	1500	465	34.5	$56	10x
LED9A19	15,000	800	60W A19	1000	850	51	$84	15x
LED12A19	15,000	1100	75W A19	750	1170	63	$103	20x
LED16A21	15,000	1600	100W A19	750	1600	84	$138	20x
LED23A21	15,000	2600	150W A21	750	2670	125	$209	20x

*Energy savings over life of lamp calculated at $0.11/kWh

Lamp Dimensions

	(A) MOL (inches)	(B) Diameter (inches)
LED5.5 & LED9	4.17	2.36
LED12A19	4.42	2.36
LED16A21	5.15	2.75
LED23A21	5.45	2.93

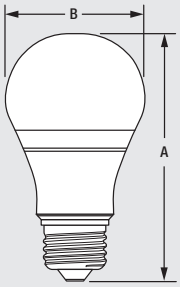

LED5.5 & LED9

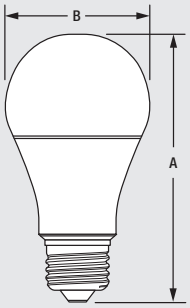

LED12A19

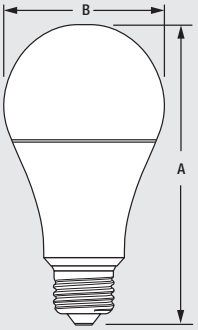

LED16A21
LED23A21

LEDVANCE LLC
200 Ballardvale Street
Wilmington, MA 01887 USA
Phone 1-800-LIGHTBULB (1-800-544-4828)
www.sylvania.com

SYLVANIA and LEDVANCE are registered trademarks.
All other trademarks are those of their respective owners.
Licensee of product trademark SYLVANIA in general lighting.
Specifications subject to change without notice.

/sylvania /sylvania

© 2018 LEDVANCE LLC

WPTLED12N/D10/PC2

RAB Outdoor

High performance LED tallpack. Covers footprint of most HID Tallpacks. Vandal resistant lens. Precision die-cast aluminum. 0-10V dimmable driver with 120-277V photocell.

Color: Bronze

Weight: 6.5 lbs

Project:	Type:
Prepared By:	Date:

Driver Info

Type:	Constant Current
120V:	0.108A
208V:	0.068A
240V:	0.059A
277V:	0.053A
Input Watts:	14W
Efficiency:	89%

LED Info

Watts:	12W
Color Temp:	4000K (Neutral)
Color Accuracy:	73 CRI
L70 Lifespan:	100,000
Lumens:	1,374
Efficacy:	102 LPW

Technical Specifications

Listings

UL Listing:

Suitable for wet locations. Wall mount only.

IESNA LM-79 & LM-80 Testing:

RAB LED luminaires and LED components have been tested by an independent laboratory in accordance with IESNA LM-79 and LM-80.

Electrical

THD:

11.3% at 120V, 12.5% at 277V

Power Factor:

99.0% at 120V, 92.0% at 277V

Drivers:

Constant Current, Class 2, 300mA, 100-277V, 50-60Hz, 120V: 0.108A, 208V: 0.068A, 240V: 0.059A, 277V: 0.053A, Surge Protection: 6kV

Dimming Driver:

0-10V dimming driver standard for ultimate flexibility. Use as on/off or utilize the 0-10V DC dimming circuit for controls.

Photocell:

Photocell is rated for 120V thru 277V. To disable, simply use the provide silicone rubber cap and cover.

LED Characteristics

Lifespan:

100,000-hour LED lifespan based on IES LM-80 results and TM-21 calculations

LEDs:

Long-life, high-efficacy surface mount LEDs

Color Stability:

LED color temperature is warrantied to shift no more than 200K in CCT over a 5 year period

Color Uniformity:

RAB's range of CCT (Correlated Color Temperature) follows the guidelines of the American National Standard for Specifications for the Chromaticity of Solid State Lighting (SSL) Products, ANSI C78.377-2017.

Optical

BUG Rating:

B0 U3 G2

Construction

Ambient Temperature:

Suitable for -40°C (-40°F) to 40°C (104°F)

Cold Weather Starting:

Minimum starting temperature is -40°C (-40°F)

Thermal Management:

Superior thermal management with die-cast aluminum heatsink

Housing:

Precision die-cast aluminum

Refractor Lens:

High-impact, diffuse, UV-stabilized polycarbonate

Mounting:

Three (3) 1/2" NPS conduit entry points (2 sides for through-feed, and bottom), and drilling template for easy wall box mounting

Reflector:

High-gloss white aluminum

Gaskets:

High-temperature silicone gaskets

Finish:

Formulated for high-durability and long lasting color

Green Technology:

Mercury and UV-free. RoHS compliant components.

Other

Warranty:

RAB warrants that our LED products will be free from defects in materials and workmanship for a period of five (5) years from the date of delivery to the end user, including coverage of light output, color stability, driver performance and fixture finish. RAB's warranty is subject to all terms and conditions found at

Patents:

The design of WPTLED is protected by patents pending in US, Canada, China, Taiwan and Mexico

Equivalency:

Equivalent to 50W Metal Halide/35W HPS

Buy American Act Compliance:

RAB values USA manufacturing! Upon request, RAB may be able to manufacture this product to be compliant with the Buy American Act (BAA). Please contact customer service to request a quote for the product to be made BAA compliant.

Copyright © 2018 RAB Lighting Inc. All Rights Reserved Note: Specifications are subject to change at any time without notice

WPTLED12N/D10/PC2

RAB Outdoor

Dimensions

Features

- Covers footprints of most HID tallpacks
- 0-10V dimmable driver & 120 - 277V photocell
- Vandal-resistant lens
- 100,000-Hour LED lifespan

Ordering Matrix

Family	Wattage	Color Temp	Finish	Dimming	Photocell	Lightcloud	Other Options
WPTLED	12	N	^	/D10	/PC2	^	^
	12 = 12W **25** = 25W **40** = 40W	**Blank** = 5000K (Cool) **Y** = 3000K (Warm) **N** = 4000K (Neutral)	**Blank** = Bronze **W** = White	**/D10** = Dimmable	**/PC2** = 120-277V Photocell	**Blank** = No Lightcloud **/LC** = Lightcloud Controller	**Blank** = Standard **USA** = BAA Compliant

Copyright © 2018 RAB Lighting Inc. All Rights Reserved Note: Specifications are subject to change at any time without notice

WPLED52N/PCS2

RAB Outdoor

LED 52W Wallpacks. 3 cutoff options. Patent Pending thermal management system. 100,000 hour L70 lifespan. 5-year, no-compromise warranty.

Color: Bronze

Weight: 18.4 lbs

Project:	Type:
Prepared By:	Date:

Driver Info		LED Info	
Type:	Constant Current	Watts:	52W
120V:	N/A	Color Temp:	4000K (Neutral)
208V:	0.33A	Color Accuracy:	72 CRI
240V:	0.29A	L70 Lifespan:	100,000
277V:	0.24A	Lumens:	7,236
Input Watts:	58W	Efficacy:	124 LPW
Efficiency:	89%		

Technical Specifications

Electrical

Photocell:

277V Swivel Photocell Included. Photocell is compatible with 208V-277V.

THD:

6.5% at 120V, 7.8% at 277V

Power Factor:

99.3% at 120V, 97.2% at 277V

Driver:

Constant Current, 720mA, Class 2, 100 - 277V, 50 - 60 Hz, 100 - 277VAC .8 Amps.

Surge Protection:

6kV

Listings

UL Listing:

Suitable for wet locations

DLC Listed:

This product is on the Design Lights Consortium (DLC) Qualified Products List and is eligible for rebates from DLC Member Utilities.
DLC Product Code: P00001742

IESNA LM-79 & IESNA LM-80 Testing:

RAB LED luminaires and LED components have been tested by an independent laboratory in accordance with IESNA LM-79 and LM-80.

LED Characteristics

Lifespan:

100,000-hour LED lifespan based on IES LM-80 results and TM-21 calculations

LEDs:

Two (2) multi-chip, high-output, long-life LEDs

Color Consistency:

3-step MacAdam Ellipse binning to achieve consistent fixture-to-fixture color

Color Stability:

LED color temperature is warrantied to shift no more than 200K in CCT over a 5 year period

Color Uniformity:

RAB's range of CCT (Correlated Color Temperature) follows the guidelines of the American National Standard for Specifications for the Chromaticity of Solid State Lighting (SSL) Products, ANSI C78.377-2017.

Construction

Ambient Temperature:

Suitable For use in 40°C (104°F)

Cold Weather Starting:

Minimum starting temperature is -40°C (-40°F)

Housing:

Precision die cast aluminum housing, lens frame

Mounting:

Die-cast aluminum wall bracket with (5) 1/2" conduit openings with plugs. Two-piece bracket with tether for ease of installation and wiring.

Arm:

Die-cast aluminum with wiring access plate

Cutoff:

Standard (15°)

Reflector:

Specular vacuum-metallized polycarbonate

Gaskets:

High temperature silicone

Lens:

Tempered glass

Finish:

Formulated for high-durability and long lasting color

Green Technology:

Mercury and UV-free. RoHS compliant components.

Other

Warranty:

RAB warrants that our LED products will be free from defects in materials and workmanship for a period of five (5) years from the date of delivery to the end user, including coverage of light output, color stability, driver performance and fixture finish. RAB's warranty is subject to all terms and conditions found at

Patents:

The WPLED design is protected by patents in the U.S. Pat D653,377, Canada Pat. 142252, China Pat. ZL201130356930.8, and Mexico Pat. 36921 and pending patent in TW.

Copyright © 2018 RAB Lighting Inc. All Rights Reserved Note: Specifications are subject to change at any time without notice

Technical Specifications (continued)

Other

Replacement:

Replaces 250W HID

Buy American Act Compliance:

RAB values USA manufacturing! Upon request, RAB may be able to manufacture this product to be compliant with the Buy American Act (BAA). Please contact customer service to request a quote for the product to be made BAA compliant.

Optical

BUG Rating:

B0 U2 G3

Dimensions

Features

- High performance LED light engine
- Maintains 70% of initial lumens at 100,000 hours
- Weatherproof high temperature silicone gaskets
- Superior heat sinking with die cast aluminum housing and external fins
- Replaces 250W MH
- Traditional wallpack look from the front
- 3 cutoff options
- 5-Year, No-Compromise Warranty

Ordering Matrix

Family	Cutoff	Wattage	Color Temp	Finish	Driver Options	Options	Other Options
WPLED	^	52	N	^	^	/PCS2	^
	Blank = Standard (15 degrees) **C** = Cutoff (7.5 degrees) **FC** = Full Cutoff (0 degrees)	**52** = 52W **80** = 80W	**Blank** = 5000K (Cool) **N** = 4000K (Neutral) **Y** = 3000K (Warm)	**Blank** = Bronze **W** = White	**Blank** = 120-277V **/480** = 480V **/BL** = Bi-Level **/D10** = 0-10V Dimming	**Blank** = No Option **/PCS** = 120V Swivel Photocell **/PCS2** = 277V Swivel Photocell **/PCS4** = 480V Swivel Photocell **/LC** = Lightcloud	**Blank** = Standard **USA** = BAA Compliant

Copyright © 2018 RAB Lighting Inc. All Rights Reserved Note: Specifications are subject to change at any time without notice

WPLED3T150N/PCT

RAB Outdoor

Color: Bronze

Weight: 34.8 lbs

Project:	Type:
Prepared By:	Date:

Driver Info

Type:	Constant Current
120V:	1.31A
208V:	0.80A
240V:	0.69A
277V:	0.60A
Input Watts:	153W
Efficiency:	98%

LED Info

Watts:	150W
Color Temp:	4000K (Neutral)
Color Accuracy:	71 CRI
L70 Lifespan:	100,000
Lumens:	16,253
Efficacy:	106 LPW

Technical Specifications

Electrical

Photocell:

120-277V twistlock photocell included. Photocell is compatible with 120-277V.

THD:

7.7% at 120V

Driver:

One Driver, Constant Current, Class 2, 2100mA 100-277V, 50-60Hz, Power Factor 99%

Listings

DLC Listed:

This product is on the Design Lights Consortium (DLC) Qualified Products List and is eligible for rebates from DLC Member Utilities.
DLC Product Code: PKSHHN4F

UL Listing:

Suitable for wet locations

IESNA LM-79 & LM-80 Testing:

RAB LED luminaires and LED components have been tested by an independent laboratory in accordance with IESNA LM-79 and LM-80.

LED Characteristics

Lifespan:

100,000-hour LED lifespan based on IES LM-80 results and TM-21 calculations

LEDs:

Multi-chip, high-output, long-life LEDs

Color Consistency:

3-step MacAdam Ellipse binning to achieve consistent fixture-to-fixture color

Color Stability:

LED color temperature is warrantied to shift no more than 200K in CCT over a 5 year period

Color Uniformity:

RAB's range of CCT (Correlated Color Temperature) follows the guidelines of the American National Standard for Specifications for the Chromaticity of Solid State Lighting (SSL) Products, ANSI C78.377-2017.

Construction

IES Classification:

The Type III distribution is ideal for roadway, general parking and other area lighting applications where a larger pool of lighting is required. It is intended to be located near the side of the area, allowing the light to project outward and fill the area.

IP Rating:

Ingress Protection rating of IP66 for dust and water

Maximum Ambient Temperature:

Suitable for use in 40°C (104°F)

Cold Weather Starting:

Minimum starting temperature is -40°C (-40°F)

Thermal Management:

Superior thermal management with external "Air-Flow" fins

Housing:

Die-cast aluminum housing, lens frame and mounting arm

Mounting:

Heavy-duty mounting arm with "O" ring seal & stainless steel screws

Reflector:

Specular vacuum-metallized polycarbonate

Gaskets:

High-temperature silicone gaskets

Finish:

Formulated for high-durability and long lasting color

Green Technology:

Mercury and UV-free. RoHS compliant components.

Other

Warranty:

RAB warrants that our LED products will be free from defects in materials and workmanship for a period of five (5) years from the date of delivery to the end user, including coverage of light output, color stability, driver performance and fixture finish. RAB's warranty is subject to all terms and conditions found at

Patents:

The design of WPLED150 is protected by patents pending in US, Canada, China, Taiwan and Mexico

Buy American Act Compliance:

RAB values USA manufacturing! Upon request, RAB may be able to manufacture this product to be compliant with the Buy American Act (BAA). Please contact customer service to request a quote for the product to be made BAA compliant.

Optical

BUG Rating:

B1 U0 G2

Copyright © 2018 RAB Lighting Inc. All Rights Reserved Note: Specifications are subject to change at any time without notice

WPLED3T150N/PCT

RAB Outdoor

Dimensions

Features

- High performance LED light engine
- Maintains 70% of initial lumens at 100,000 hours
- Weatherproof high temperature silicone gaskets
- Superior heat sinking with die cast aluminum housing and external fins
- Replaces 400W MH
- 100 up to 277 Volts
- 5-year warranty

Ordering Matrix

Family	Optics	Wattage	Color Temp	Mounting	Finish	Driver Options	Photocell Options
WPLED	3T	150	N	^	^	^	/PCT
	4T = Type IV **3T** = Type III **2T** = Type II	**50** = 50W **78** = 78W **105** = 105W **125** = 125W **150** = 150W	**Blank** = 5000K (Cool) **N** = 4000K (Neutral) **Y** = 3000K (Warm)	**Blank** = Arm **FX** = No Arm	**Blank** = Bronze **W** = White	**Blank** = Standard **/480** = 480V **/BL** = Bi-Level **/D10** = 0-10V Dimming	**Blank** = Standard **/PC** = 120V Photocell **/PC2** = 277V Photocell **/PCT** = 120-277V Twistlock Photocell **/PCT4** = 480V Twistlock Photocell **/PCS** = 120V Swivel Photocell **/PCS2** = 277V Swivel Photocell **/PCS4** = 480V Swivel Photocell **/WS2** = Multi-Level Motion Sensor (20 ft. mt. ht.) **/WS4** = Multi-Level Motion Sensor (40 ft. mt. ht.)

Copyright © 2018 RAB Lighting Inc. All Rights Reserved Note: Specifications are subject to change at any time without notice

FXLED300SFN/PCT

RAB Outdoor

Ultra high output, high efficiency LED floodlight with NEMA Types: 7H x 6V, 6H x 4V, 4H x 6V, 5H x 5V and 3H x 3V. Patent Pending airflow technology ensures long LED and driver lifespan. Use for general and security lighting for large areas, building facades, signs and landscapes.

Color: Bronze

Weight: 66.1 lbs

Project:	Type:
Prepared By:	Date:

Driver Info		LED Info	
Type:	Constant Current	Watts:	300W
120V:	2.65A	Color Temp:	4000K (Neutral)
208V:	1.59A	Color Accuracy:	82 CRI
240V:	1.38A	L70 Lifespan:	100,000
277V:	1.17A	Lumens:	34,800
Input Watts:	316W	Efficacy:	110 LPW
Efficiency:	95%		

Technical Specifications

Listings

UL Listing:

Suitable for wet locations. Suitable for ground mounting.

IESNA LM-79 & LM-80 Testing:

RAB LED luminaires and LED components have been tested by an independent laboratory in accordance with IESNA LM-79 and LM-80.

DLC Listed:

This product is on the Design Lights Consortium (DLC) Qualified Products List and is eligible for rebates from DLC Member Utilities.
DLC Product Code: P7HRCS9H

Electrical

THD:

7.0% at 120V, 11.0% at 277V

Drivers:

Constant Current, 1050mA, 50/60 Hz, 120-277V, 4 kV surge protection, 120V: 2.65A, 208V: 1.59A, 240V: 1.38A, 277V: 1.17A, THD <20%, Power Factor: 99%

Photocell:

120-277V twistlock photocell included. Photocell is compatible with 120-277V.

Optical

NEMA Type:

NEMA Beam Spread of 7H x 6V

LED Characteristics

Lifespan:

100,000-hour LED lifespan based on IES LM-80 results and TM-21 calculations

LEDs:

Multip-chip, high-output, long-life LEDs

Note:

All values are typical (tolerance +/- 10%)

Color Consistency:

3-step MacAdam Ellipse binning to achieve consistent fixture-to-fixture color

Color Stability:

LED color temperature is warrantied to shift no more than 200K in CCT over a 5 year period

Color Uniformity:

RAB's range of CCT (Correlated Color Temperature) follows the guidelines of the American National Standard for Specifications for the Chromaticity of Solid State Lighting (SSL) Products, ANSI C78.377-2017.

Construction

IP Rating:

Ingress Protection rating of IP66 for dust and water

Maximum Ambient Temperature:

Suitable for use in 40°C (104°F)

Effective Projected Area:

EPA = 4

Cold Weather Starting:

Minimum starting temperature is -40°C (-40°F)

Thermal Management:

Superior thermal management with external "Air-Flow" fins

Lens:

Tempered glass lens

Housing:

Die-cast aluminum housing and door frame

Mounting:

Heavy-duty Slipfitter for 2 3/8"OD pipe

Reflector:

Specular and semi-specular vacuum metalized polycarbonate

Gaskets:

High-temperature silicone gaskets

Finish:

Formulated for high-durability and long lasting color

Green Technology:

Mercury and UV-free. RoHS compliant components.

Other

Warranty:

RAB warrants that our LED products will be free from defects in materials and workmanship for a period of five (5) years from the date of delivery to the end user, including coverage of light output, color stability, driver performance and fixture finish. RAB's warranty is subject to all terms and conditions found at

Copyright © 2018 RAB Lighting Inc. All Rights Reserved Note: Specifications are subject to change at any time without notice

Technical Specifications (continued)

Other

Replacement:

Replaces 1000W Metal Halide

Buy American Act Compliance:

RAB values USA manufacturing! Upon request, RAB may be able to manufacture this product to be compliant with the Buy American Act (BAA). Please contact customer service to request a quote for the product to be made BAA compliant.

Dimensions

Features

- 300W replaces 1000 MH floodlights
- 100,000-hour LED lifespan
- 5-Year, No-Compromise Warranty

Ordering Matrix

Family	Wattage	Mounting	Color Temp	NEMA Type	Finish	Driver Options	Options	Other Options
FXLED	300	SF	N	^	^	^	/PCT	^
	200 = 200W **300** = 300W	**SF** = Slipfitter **T** = Trunnion	**Blank** = 5000K (Cool) **N** = 4000K (Neutral) **Y** = 3000K (Warm)	**Blank** = 7H x 6V **B64** = 6H x 4V **B55** = 5H x 5V **B33** = 3H x 3V **B46** = 4H x 6V	**Blank** = Bronze **W** = White	**Blank** = 120-277V **/480** = 480V **/BL** = Bi-Level (Slipfitters only) **/D10** = 0-10V Dimming	**Blank** = No option **/PCS** = 120V Swivel **/PCS2** = 277V Swivel **/PCT** = 120-277V Twistlock **/PCT4** = 480V Twistlock **/PCS4** = 480V Swivel **/LC** = Lightcloud Controller	**Blank** = Standard **USA** = BAA Compliant

Copyright © 2018 RAB Lighting Inc. All Rights Reserved Note: Specifications are subject to change at any time without notice

FFLED80N/PCS2

RAB Outdoor

Rectangular shaped LED floodlight designed to replace 250W Metal Halide. Patent Pending airflow technology ensures long LED and driver lifespan. Use for building facade lighting, sign lighting, LED landscape lighting and instant-on security lighting.

Color: Bronze

Weight: 12.6 lbs

Project:	Type:
Prepared By:	Date:

Driver Info

Type:	Constant Current
120V:	N/A
208V:	0.48A
240V:	0.41A
277V:	0.36A
Input Watts:	88W
Efficiency:	91%

LED Info

Watts:	80W
Color Temp:	4000K (Neutral)
Color Accuracy:	72 CRI
L70 Lifespan:	100,000
Lumens:	9,157
Efficacy:	104 LPW

Technical Specifications

Listings

UL Listing:

Suitable for wet locations. Suitable for ground mounting.

DLC Listed:

This product is on the Design Lights Consortium (DLC) Qualified Products List and is eligible for rebates from DLC Member Utilities.
DLC Product Code: PXS2A8F6

IESNA LM-79 & LM-80 Testing:

RAB LED luminaires and LED components have been tested by an independent laboratory in accordance with IESNA LM-79 and LM-80.

LED Characteristics

Note:

All values are typical (tolerance +/- 10%)

LEDs:

Multi-chip, high-output, long-life LEDs

Lifespan:

100,000-hour LED lifespan based on IES LM-80 results and TM-21 calculations

Color Consistency:

3-step MacAdam Ellipse binning to achieve consistent fixture-to-fixture color

Color Stability:

LED color temperature is warrantied to shift no more than 200K in CCT over a 5 year period

Color Uniformity:

RAB's range of CCT (Correlated Color Temperature) follows the guidelines of the American National Standard for (SSL) Products, ANSI C78.377-2017.

Electrical

Driver:

Constant Current, Class 2, 100-277V, 50/60 Hz, 6 kV surge protection, 120V: 074 A, 208V: 048 A, 240V: 041 A, 277V: 036 A

Photocell:

277V Swivel Photocell Included. Photocell is compatible with 208V-277V.

Construction

IP Rating:

Ingress Protection rating of IP66 for dust and water

Ambient Temperature:

Suitable For use in 40°C (104°F)

Cold Weather Starting:

Minimum starting temperature is -40°C (-40°F)

Thermal Management Housing:

Superior heat sinking with external Air-Flow fins

Housing:

Die-cast aluminum housing, lens frame and mounting arm

Threaded Size:

1/2" threaded arm

Mounting:

Heavy-duty mounting arm with "O" ring seal & stainless steel screw

Effective Projected Area:

EPA = 0.65

Reflector:

Specular polycarbonate

Gaskets:

High-temperature silicone gaskets

Finish:

Formulated for high-durability and long lasting color

Green Technology:

Mercury and UV-free. RoHS compliant components.

Optical

NEMA Type:

NEMA Beam Spread of 7H x 6V

Other

Warranty:

RAB warrants that our LED products will be free from defects in materials and workmanship for a period of five (5) years from the date of delivery to the end user, including coverage of light output, color stability, driver performance and fixture finish. RAB's warranty is subject to all terms and conditions found at

Patents:

The FFLED design is protected by U.S. Pat. D643,147, Canada Pat. 140798, China Pat. ZL201130171304.1, Mexico Pat. 36757 and pending patent in Taiwan.

Copyright © 2018 RAB Lighting Inc. All Rights Reserved Note: Specifications are subject to change at any time without notice

Technical Specifications (continued)

Other

Equivalency:

Equivalent to 250W Metal Halide

Buy American Act Compliance:

RAB values USA manufacturing! Upon request, RAB may be able to manufacture this product to be compliant with the Buy American Act (BAA). Please contact customer service to request a quote for the product to be made BAA compliant.

Dimensions

Features

- Ultra efficient LED and optical design
- Replaces 250W MH floodlights
- 100,000 hour life based on LM-80 tests
- Air-flow technology heatsink
- 5-Year, No-Compromise Warranty

Ordering Matrix

Family	Wattage	Mounting	Color Temp	NEMA Type	Finish	Driver	Photocell Options	Other Options
FFLED	80	^	N	^	^	^	/PCS2	^
	18 = 18W **26** = 26W **39** = 39W **52** = 52W **80** = 80W	**Blank** = Swivel Arm **SF** = Slipfitter **T** = Trunnion	**Blank** = 5000K (Cool) **N** = 4000K (Neutral) **Y** = 3000K (Warm)	**Blank** = 7H x 6V **B55** = 5H x 5V **B44** = 4H x 4V	**Blank** = Bronze **W** = White	**Blank** = On/Off **/D10** = 0-10V Dimming **/480** = 480V On/Off (not available for 80W models)	**Blank** = No Option **/PC** = 120V Photocell **/PC2** = 277V Photocell **/PCS** = 120V Swivel Photocell **/PCS2** = 277V Swivel Photocell **/PCS4** = 480V Swivel Photocell	**Blank** = Standard **USA** = BAA Compliant

Copyright © 2018 RAB Lighting Inc. All Rights Reserved Note: Specifications are subject to change at any time without notice

BAYLED78NW

RAB | Indoor

78W BAYLED high bay replaces 250W MH high bays, reducing energy consumption by 67%. Suitable for large spaces, including warehouses, factories, and distribution centers.

Color: White

Weight: 26.2 lbs

Project:	Type:
Prepared By:	Date:

Driver Info

Type:	Constant Current
120V:	0.82A
208V:	0.52A
240V:	0.45A
277V:	0.4A
Input Watts:	91W
Efficiency:	86%

LED Info

Watts:	78W
Color Temp:	4000K (Neutral)
Color Accuracy:	75 CRI
L70 Lifespan:	100,000
Lumens:	11,392
Efficacy:	125 LPW

Technical Specifications

Listings

UL Listing:

Suitable for damp locations with cord and hook. Suitable for wet locations with 3/4" pendant stem. Covered ceiling mount only.

IESNA LM-79 & LM-80 Testing:

RAB LED luminaires and LED components have been tested by an independent laboratory in accordance with IESNA LM-79 and LM-80.

Electrical

THD:

11.83% at 120V, 9.66% at 277V

Power Factor:

99.1% at 120V, 93.5% at 277V

Drivers (3):

Constant Current, 720mA, Class 2 with 6kV surge protection, 100-277VAC, 50/60 Hz

LED Characteristics

LEDs:

Three multi-chip, 26W high-output, long-life LEDs

Lifespan:

100,000-hour LED lifespan based on IES LM-80 results and TM-21 calculations

Color Consistency:

3-step MacAdam Ellipse binning to achieve consistent fixture-to-fixture color

Color Stability:

LED color temperature is warrantied to shift no more than 200K in CCT over a 5 year period

Color Uniformity:

RAB's range of CCT (Correlated Color Temperature) follows the guidelines of the American National Standard for Specifications for the Chromaticity of Solid State Lighting (SSL) Products, ANSI C78.377.2011.

Construction

Ambient Temperature:

Suitable for use in 55°C (131°F)

Thermal Management:

Superior thermal management with external air-flow fins

Housing:

Precision die-cast aluminum housing and door frame with 3-foot 600V power cord

Mounting:

Heavy-duty 3/4" NPS hook and 3 foot safety chain

Recommended Mounting Height:

25 ft

Lens:

Tempered glass

Reflector:

Specular vacuum metallized polycarbonate

Gaskets:

High-temperature silicone

Finish:

Formulated for high-durability and long lasting color

Green Technology:

Mercury and UV-free. RoHS compliant components.

Other

Patents:

The design of the BAYLED™ is protected by patents pending in US, Canada, China, Taiwan and Mexico

Accessories:

Available accessories include protective polyshield and wire guards, replacement lens and doorframe, and an occupancy sensor.

Equivalency:

Equivalent to 4 lamp T8 fixtures

Buy American Act Compliance:

RAB values USA manufacturing! Upon request, RAB may be able to manufacture this product to be compliant with the Buy American Act (BAA). Please contact customer service to request a quote for the product to be made BAA compliant.

Copyright © 2018 RAB Lighting Inc. All Rights Reserved Note: Specifications are subject to change at any time without notice

BAYLED78NW

RAB | Indoor

Dimensions

Features

- Replaces 250W MH high bays
- Reduces energy consumption by 67%
- 100,000-hour LED lifespan
- 5-Year, No-Compromise Warranty

Ordering Matrix

Family	Wattage	Color Temp	Finish	Options	Other Options
BAYLED	78	N	W	^	^
	78 = 78W **104** = 104W	**Blank** = 5100K (Cool) **N** = 4000K (Neutral) **Y** = 3000K (Warm)	**W** = White	**Blank** = No Option **/BL** = Bi-Level **/D10** = 0-10V Dimming **/LC** = Lightcloud Controller **/D10/LC** = 0-10V Dimming w/ Lightcloud Controller	**Blank** = Standard **USA** = BAA Compliant

Copyright © 2018 RAB Lighting Inc. All Rights Reserved Note: Specifications are subject to change at any time without notice

RECTANGULAR LED KITS
800 AND 1600 LUMEN OPTIONS

FUTURE›FIT LED KITS

DESCRIPTION

Pre-assembled UL 1598C Classified LED retrofit kit. Includes the following components:

• (1) LED Driver • (1) LED Module • (1) Metal Pan • Mounting Accessories (Mounting Hardware and Wiring Hardware)

APPLICATION

Upgrade surface-mount canopy/security fluorescent-style luminaires to an LED solution. Suitable for after-market or OEM installation. (OEM must have UL LED Luminaire General Coverage file.)

TYPICAL FIXTURE APPLICATION

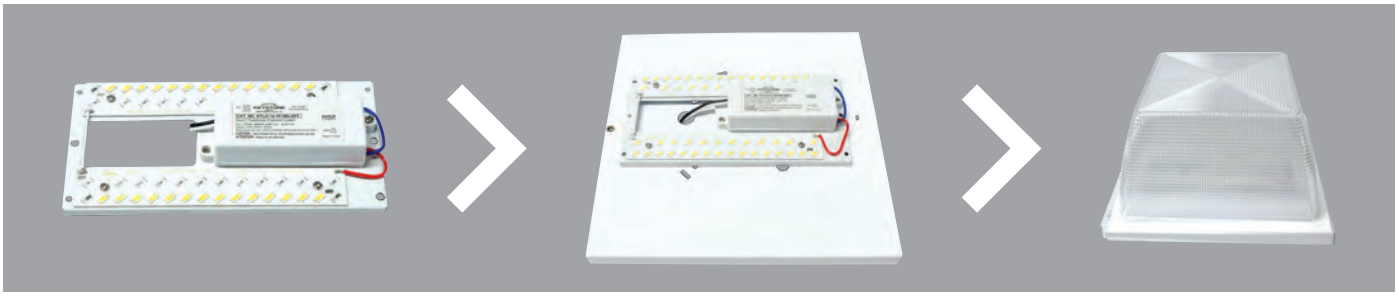

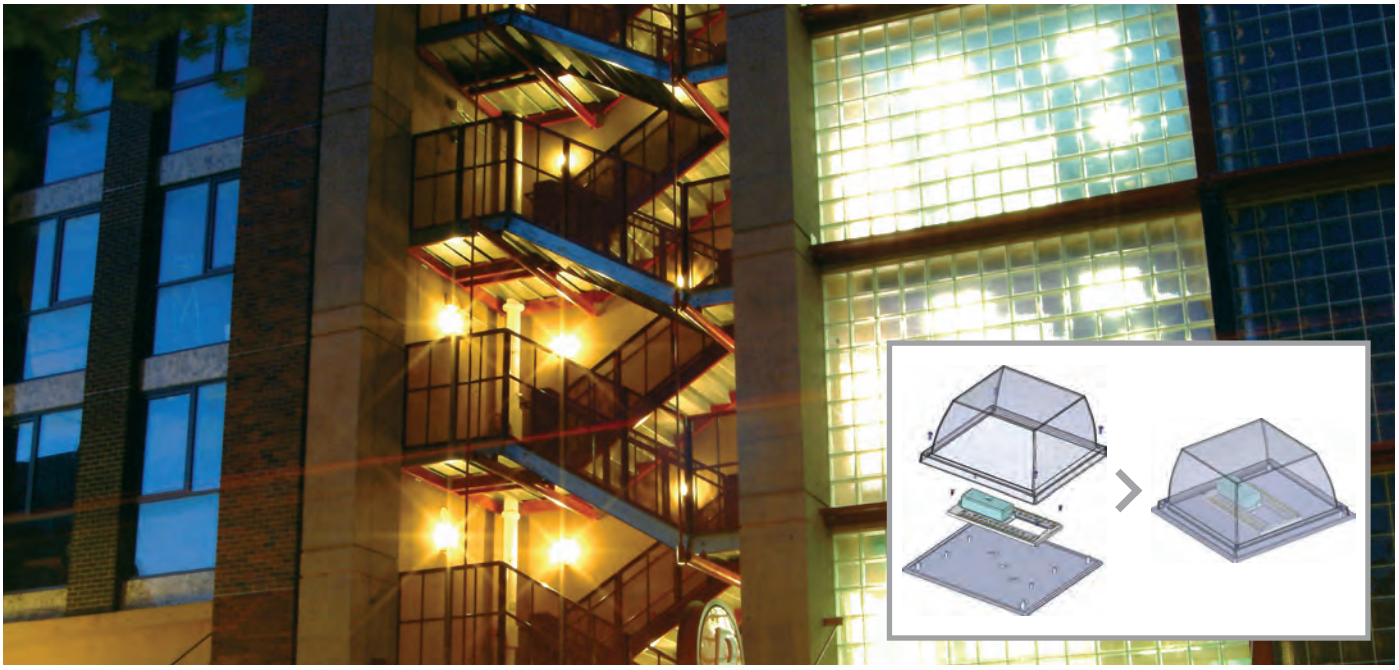

SYSTEM FEATURES

Module Features

- For Use in Class 2 Lighting Systems
- Highly Reflective White Soldermask
- Low Profile WAGO Push Connectors
- UL Recognized Components
- Single-Sided CEM3 Substrate
- 3-Step MacAdam Color Binning
- LM80 Tested LEDs by Samsung
- Beam Angle: 120°
- Reported Life Expectancy: L70 > 36,000 hours at Tc <85°C
- Calculated Life Expectancy: L70 = 93,000 hours at Tc <85°C
- Maximum Board Temperature at Tc Point: 85°C

Driver Features

- 120V Input, 0.7 Power Factor
- UL 8750 Recognized Component LED Power Unit
- Meets FCC Part 15 Class B (Consumer) Limit for EMI
- Over Current, Short Circuit, and Open Circuit Protection
- Class 2 Output
- Type 1 Outdoor, Suitable for Dry and Damp Locations
- Up to 194°F/90°C Maximum Case Temperature
- THD: <20%

RECTANGULAR LED KITS
800 AND 1600 LUMEN OPTIONS

PERFORMANCE SPECIFICATIONS

3”x6”, 800 LUMEN RECTANGULAR

Wiring: Series

KIT CONTENTS:
Driver: (1) KTLD-14-1P-560-AF5
Module: (2) KTLM-1050-R1-840-14A
Metal Pan: Yes
Mounting Hardware and Accessories

Color Temp	Input Voltage	LED Retrofit Kit Catalog Number	No. of Modules	Total System Drive Current	Drive Current per Module	Total Lumens per Module	Total System Lumens	Total Module Power	Module Efficacy	Driver Efficiency	Total System Power	Total System Efficacy
3000K	120V	KT-RKIT-RP-6-800-830	2	560mA	560mA	415	830	7W	118 lm/W	82%	8.5W	97 lm/W
4000K	120V	KT-RKIT-RP-6-800-840	2	560mA	560mA	425	850	7W	121 lm/W	82%	8.5W	100 lm/W
5000K	120V	KT-RKIT-RP-6-800-850	2	560mA	560mA	435	870	7W	124 lm/W	82%	8.5W	102 lm/W

3”x6”, 1600 LUMEN RECTANGULAR

Wiring: Series

KIT CONTENTS:
Driver: (1) KTLD-14-1P-560-AF5
Module: (2) KTLM-1050-R1-840-28A
Metal Pan: Yes
Mounting Hardware and Accessories

Color Temp	Input Voltage	LED Retrofit Kit Catalog Number	No. of Modules	Total System Drive Current	Drive Current per Module	Total Lumens per Module	Total System Lumens	Total Module Power	Module Efficacy	Driver Efficiency	Total System Power	Total System Efficacy
3000K	120V	KT-RKIT-RP-6-1600-830	2	560mA	560mA	775	1550	14W	110 lm/W	82%	17W	91 lm/W
4000K	120V	KT-RKIT-RP-6-1600-840	2	560mA	560mA	800	1600	14W	114 lm/W	82%	17W	94 lm/W
5000K	120V	KT-RKIT-RP-6-1600-850	2	560mA	560mA	825	1650	14W	118 lm/W	82%	17W	97 lm/W

RECTANGULAR LED KITS
800 AND 1600 LUMEN OPTIONS

PHYSICAL SPECIFICATIONS

METAL PAN

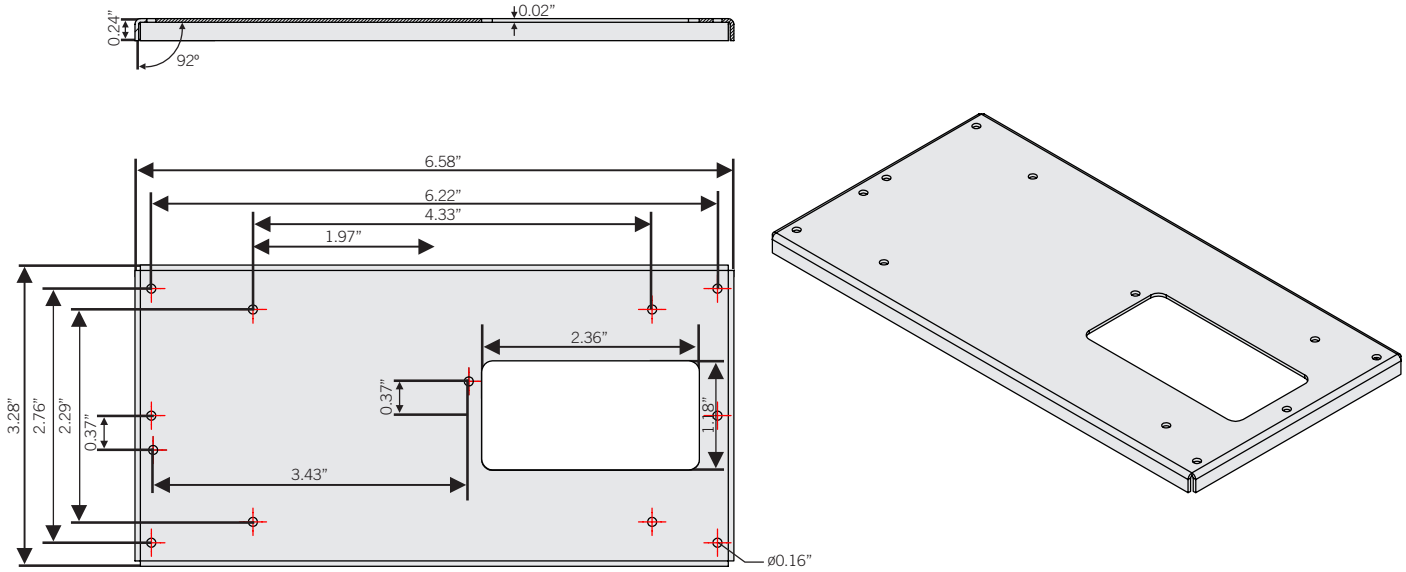

800 LUMEN MODULE

Part No. KTLM-1050-R1-840-14A

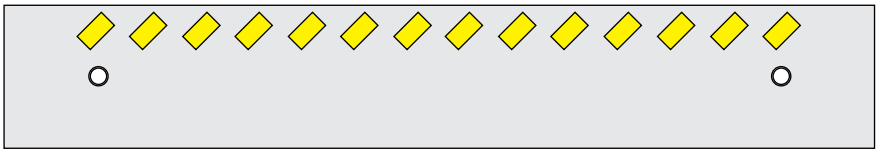

1600 LUMEN MODULE

Part No. KTLM-1050-R1-840-28A

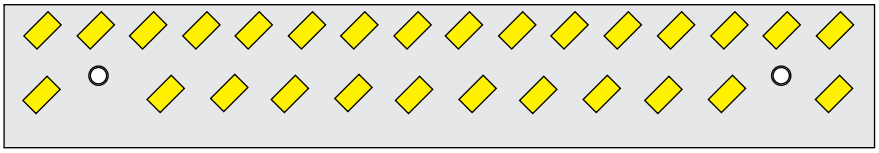

LED DRIVER

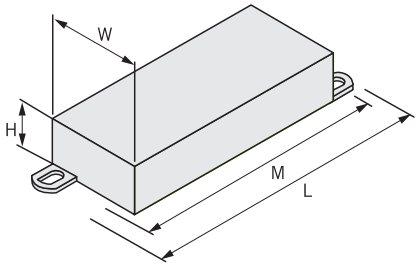

LENGTH	3.70"
WIDTH	1.30"
HEIGHT	0.79"
MOUNTING	3.40"

KT-LED100HID-EX39-840-D

HID REPLACEMENT LED LAMP

rev.1

DESCRIPTION

100W HID Replacement LED Lamp | 4000K | >83 CRI | IP64 Rated

LAMP TYPE: HID Replacement LED
BASE TYPE: EX39 (Mogul)
WATTAGE: 100W
COLOR TEMPERATURE: 4000K
METAL HALIDE EQUIVALENT: 400W
COLOR RENDERING INDEX (CRI): >83
WARRANTY: 5 Years

PRODUCT FEATURES

- Replacement for Conventional Metal Halide Lamp
- Non-Dimmable; Do Not Dim
- 50,000+ Hour Lifetime
- Environmentally Friendly: No Mercury Used
- Instant Startup
- UL Listed
- DLC Listed
- Operating Temperature: -29ºC/-20ºF to 60ºC/140ºF
- Integral Driver, Eliminates the Need for External Driver or Ballast;
- Includes 6kV Surge Protection
- IP64 Rated; Integrated Heat Sink Quickly Dissipates Heat and Guides Water Intrusion Out of the Lamp
- Active Cooling Technology: When Internal Thermal Sensor Reaches 84°C, Lamp Power Reduces To 80% Of Max; When Sensor Cools To 65°C Lamp Powers Back Up To 100% Rated Power
- Lamp Includes Safety Tether for Additional Security When Installing Lamp in Luminaire
- Suitable for Use in Fully Enclosed Fixture

OPERATING SPECIFICATIONS

ELECTRICAL CHARACTERISTICS

Input Voltage	Power Consumption	Power Factor	Input Current
120-277Vac	100W	>0.9	0.93A @ 120V 0.40A @ 277V

RATED LIFE

L70 (Hours)	50,000

PHOTOMETRIC CHARACTERISTICS

Color Temperature (CCT)	4000K
Luminous Flux	14,000 lm
Color Rendering Index (CRI)	>83
Efficacy	140 lm/W
Visible Light Area	360°

SPECTRAL DISTRIBUTION

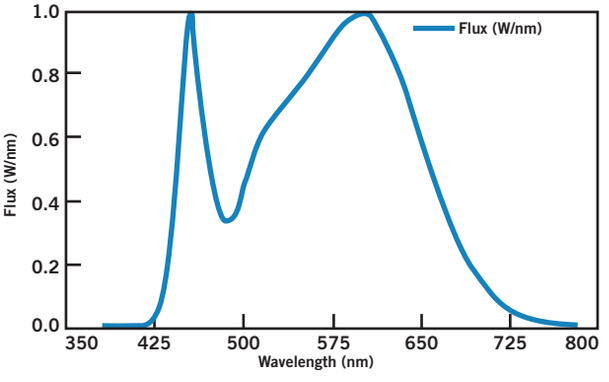

LUX DISTANCE CURVE

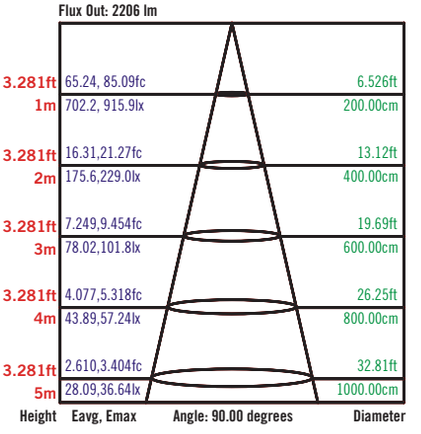

Note: The curves indicate the illuminated area and the average illumination when the luminaire is at a different distance.

Keystone Technologies • 1390 Welsh Road, North Wales, PA 19454 • Phone (800) 464-2680 • Fax (888) 966-0556 • **www.keystonetech.com**

KT-LED100HID-EX39-840-D

HID REPLACEMENT LED LAMP

rev.1

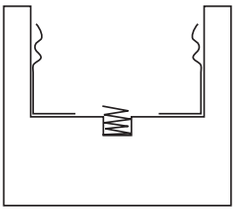

E39 MOGUL SOCKET

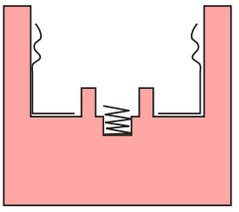

EX39 MOGUL SOCKET

EX39-based lamps will work in both E39 and EX39 sockets.

WIRING DIAGRAM

STEP 1
Disconnect power. Disconnect and remove existing ballast, capacitor, and/or ignitor (where applicable) from fixture.

STEP 2
Rewire for line voltage to the lamp socket.

STEP 3
Install new LED replacement lamp. Ensure lamp is operating properly when power is turned on.

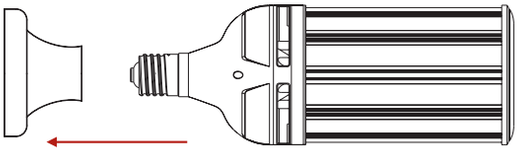

FIGURE 1

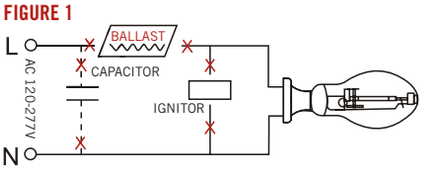

FIGURE 2

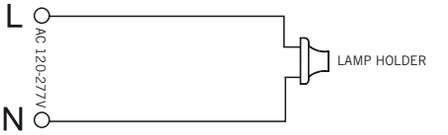

FIGURE 3

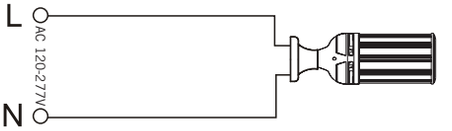

PHYSICAL CHARACTERISTICS

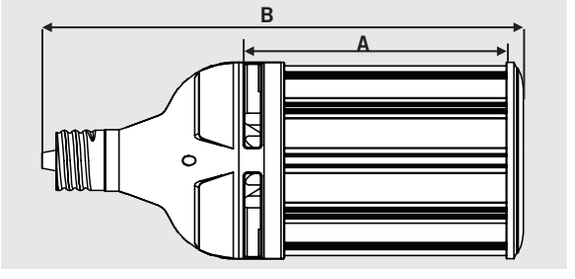

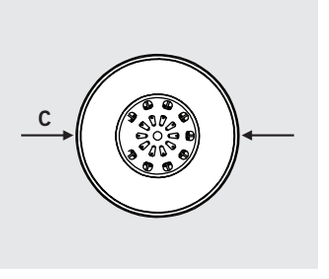

LAMP DIMENSIONS

A (Illuminated Length)	5.78”
B (Body Length)	12.57”
C (Diameter)	5.12”

BASE TYPE: EX39 (Mogul)

ORDERING INFORMATION

ORDER CODE	PACKAGING STYLE	PACK QTY.	ITEM STATUS
KT-LED100HID-EX39-840-D rev1	Distributor Pack (Individual Cartons)	6	Quick Ship

CATALOG NUMBER BREAKDOWN

KT-LED100HID-EX39-840-D rev1

Keystone Technologies	LED Lamp	Wattage	Lamp Type	Base Type	800 Series	Color Temp.	Direct Drive Series	LED Chip Revision

Keystone Technologies • 1390 Welsh Road, North Wales, PA 19454 • Phone (800) 464-2680 • Fax (888) 966-0556 • **www.keystonetech.com**

Specifications subject to change. Last revised on 6.7.18

SINCE 1945 KEYSTONE | DIRECT DRIVE HID LED

KT-LED54HID-EX39-840-D

HID REPLACEMENT LED LAMP

rev.1

DESCRIPTION

54W HID Replacement LED Lamp | 4000K | >83 CRI | IP64 Rated

LAMP TYPE: HID Replacement LED
BASE TYPE: EX39 (Mogul)
WATTAGE: 54W
COLOR TEMPERATURE: 4000K
METAL HALIDE EQUIVALENT: 250W
COLOR RENDERING INDEX (CRI): >83
WARRANTY: 5 Years

PRODUCT FEATURES

- Replacement for Conventional Metal Halide Lamp
- Non-Dimmable; Do Not Dim
- 50,000+ Hour Lifetime
- Environmentally Friendly: No Mercury Used
- Instant Startup
- UL Listed
- DLC Listed
- Operating Temperature: -29ºC/-20ºF to 60ºC/140ºF
- Suitable for Use in Fully Enclosed Fixture
- Integral Driver, Eliminates the Need for External Driver or Ballast; Includes 4kV Surge Protection
- IP64 Rated; Integrated Heat Sink Quickly Dissipates Heat and Guides Water Intrusion Out of the Lamp
- Active Cooling Technology: When Internal Thermal Sensor Reaches 84°C, Lamp Power Reduces To 80% Of Max; When Sensor Cools To 65°C Lamp Powers Back Up To 100% Rated Power

OPERATING SPECIFICATIONS

ELECTRICAL CHARACTERISTICS

Input Voltage	Power Consumption	Power Factor	Input Current
120-277Vac	54W	>0.9	0.47A @ 120V 0.20A @ 277V

PHOTOMETRIC CHARACTERISTICS

Color Temperature (CCT)	4000K
Luminous Flux	7560 lm
Color Rendering Index (CRI)	>83
Efficacy	140 lm/W
Visible Light Area	360°

RATED LIFE

L70 (Hours)	50,000

SPECTRAL DISTRIBUTION

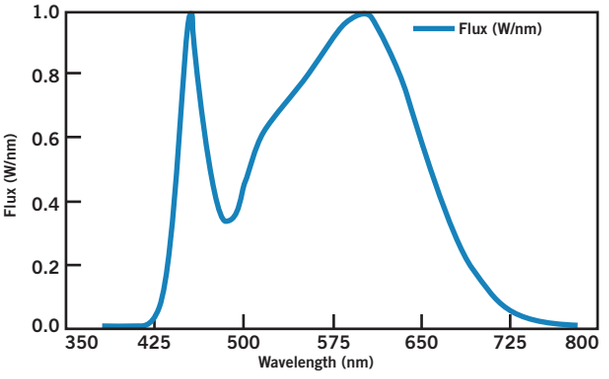

LUX DISTANCE CURVE

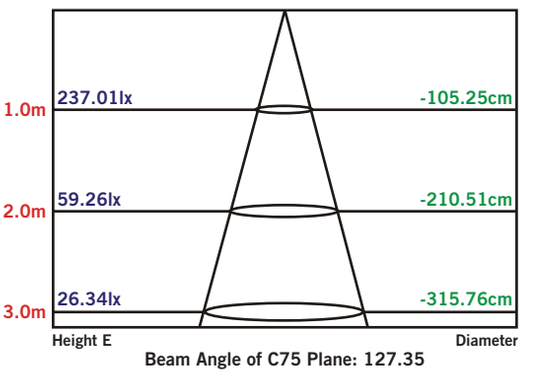

Beam Angle of C75 Plane: 127.35

Keystone Technologies • 1390 Welsh Road, North Wales, PA 19454 • Phone (800) 464-2680 • Fax (888) 966-0556 • **www.keystonetech.com**

KT-LED54HID-EX39-840-D

HID REPLACEMENT LED LAMP

rev.1

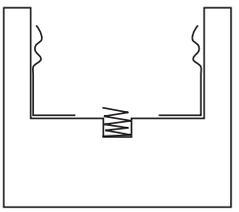

E39 MOGUL SOCKET

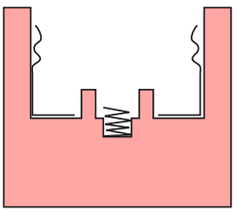

EX39 MOGUL SOCKET

EX39-based lamps will work in both E39 and EX39 sockets.

WIRING DIAGRAM

STEP 1
Disconnect power. Disconnect and remove existing ballast, capacitor, and/or ignitor (where applicable) from fixture.

STEP 2
Rewire for line voltage to the lamp socket.

STEP 3
Install new LED replacement lamp. Ensure lamp is operating properly when power is turned on.

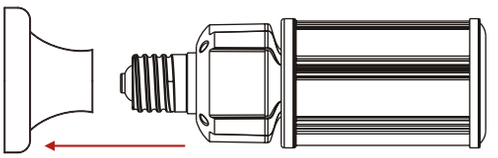

FIGURE 1

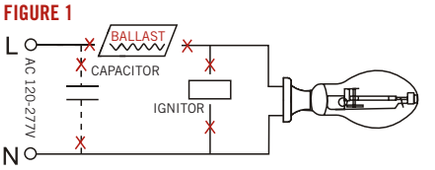

FIGURE 2

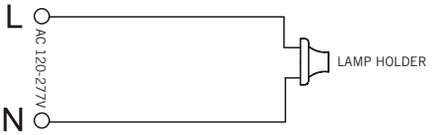

FIGURE 3

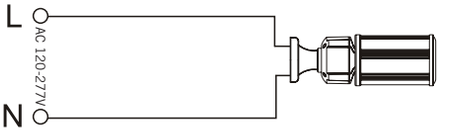

PHYSICAL CHARACTERISTICS

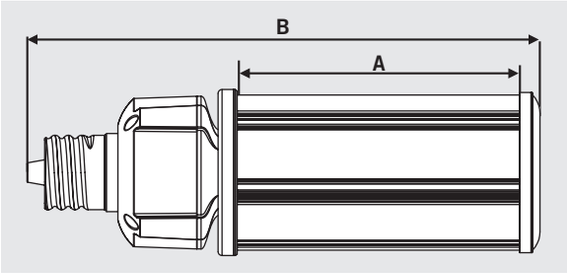

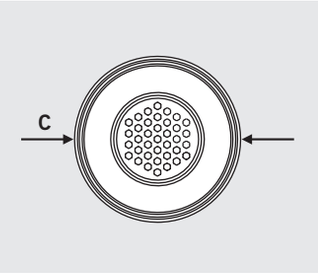

LAMP DIMENSIONS

A (Illuminated Length)	5.83”
B (Body Length)	10.70”
C (Diameter)	3.43”

BASE TYPE: EX39 (Mogul)

ORDERING INFORMATION

ORDER CODE	PACKAGING STYLE	PACK QTY.	ITEM STATUS
KT-LED54HID-EX39-840-D rev1	Distributor Pack (Individual Cartons)	16	Quick Ship

CATALOG NUMBER BREAKDOWN

KT-LED54HID-EX39-840-D rev1

- KT — Keystone Technologies
- LED — LED Lamp
- 54 — Wattage
- HID — Lamp Type
- EX39 — Base Type
- 840 — 800 Series
- D — Color Temp.
- rev1 — Direct Drive Series / LED Chip Revision

Keystone Technologies • 1390 Welsh Road, North Wales, PA 19454 • Phone (800) 464-2680 • Fax (888) 966-0556 • **www.keystonetech.com**

Specifications subject to change. Last revised on 6.7.18

KT-LED36HID-E26-840-D

HID REPLACEMENT LED LAMP

DESCRIPTION

36W HID Replacement LED Lamp | 4000K | >83 CRI | IP64 Rated

LAMP TYPE: HID Replacement LED
BASE TYPE: E26 (Medium)
WATTAGE: 36W
COLOR TEMPERATURE: 4000K
METAL HALIDE EQUIVALENT: 150W
COLOR RENDERING INDEX (CRI): >83
WARRANTY: 5 Years

PRODUCT FEATURES

- Replacement for Conventional Metal Halide Lamp
- Non-Dimmable; Do Not Dim
- 50,000+ Hour Lifetime
- Environmentally Friendly: No Mercury Used
- Instant Startup
- UL Listed
- Operating Temperature: -29ºC/-20ºF to 60ºC/140ºF
- Integral Driver, Eliminates the Need for External Driver or Ballast; Includes 4kV Surge Protection
- IP64 Rated; Integrated Heat Sink Quickly Dissipates Heat and Guides Water Intrusion Out of the Lamp
- Suitable for Use in Fully Enclosed Fixture

OPERATING SPECIFICATIONS

ELECTRICAL CHARACTERISTICS

Input Voltage	Power Consumption	Power Factor	Input Current
120-277Vac	36W	>0.9	0.32A @ 120V 0.14A @ 277V

PHOTOMETRIC CHARACTERISTICS

Color Temperature (CCT)	4000K
Luminous Flux	5040 lm
Color Rendering Index (CRI)	>83
Efficacy	140 lm/W
Visible Light Area	360º

RATED LIFE

L70 (Hours)	50,000

SPECTRAL DISTRIBUTION

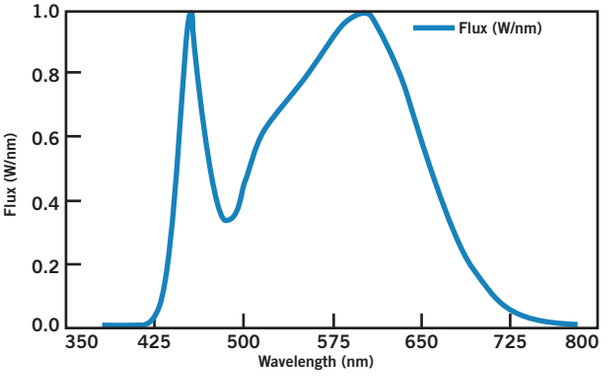

LUX DISTANCE CURVE

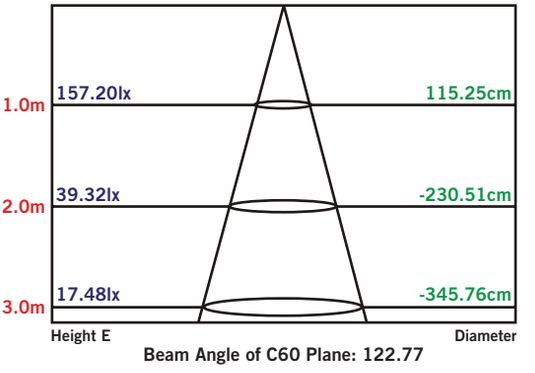

Keystone Technologies • 1390 Welsh Road, North Wales, PA 19454 • Phone (800) 464-2680 • Fax (888) 966-0556 • **www.keystonetech.com**

KT-LED36HID-E26-840-D

HID REPLACEMENT LED LAMP

WIRING DIAGRAM

STEP 1
Disconnect power. Disconnect and remove existing ballast, capacitor, and/or ignitor (where applicable) from fixture.

STEP 2
Rewire for line voltage to the lamp socket.

STEP 3
Install new LED replacement lamp. Ensure lamp is operating properly when power is turned on.

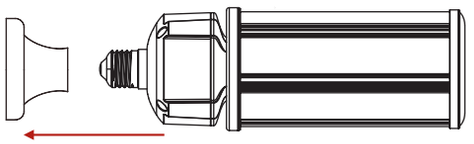

FIGURE 1

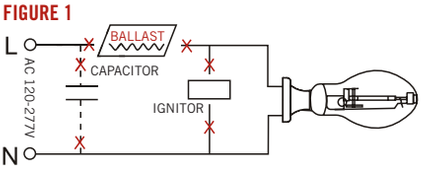

FIGURE 2

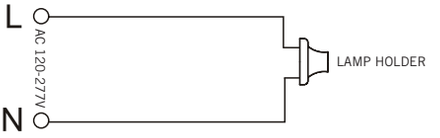

FIGURE 3

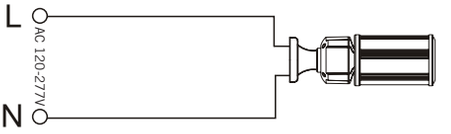

PHYSICAL CHARACTERISTICS

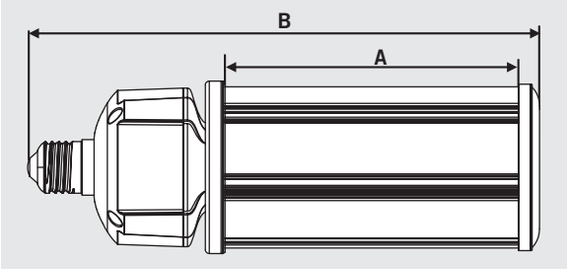

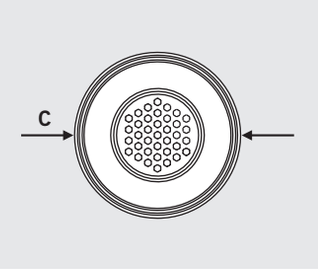

LAMP DIMENSIONS

A (Illuminated Length)	4.65”
B (Body Length)	8.98”
C (Diameter)	3.43”

BASE TYPE: E26 (Medium)

ORDERING INFORMATION

ORDER CODE	PACKAGING STYLE	PACK QTY.	ITEM STATUS
KT-LED36HID-E26-840-D-DP	Distributor Pack (Individual Cartons)	16	Quick Ship

CATALOG NUMBER BREAKDOWN

KT-LED36HID-E26-840-D-DP

KT	LED	36	HID	E26	840	D	DP
Keystone Technologies	LED Lamp	Wattage	Lamp Type	Base Type	800 Series	Color Temp.	Direct Drive Series	Packaging Style

HYLITE™ LED Lighting

LED OMNI-BULB™

Ideal for High-quality Illumination in:

- Down Lights
- Decorative Lighting
- Pendant Lights
- Stairwell Lighting
- Wall Scones
- Accent Lighting
- Walkway Lighting
- Corridor Lighting
- Wall Packs
- Ceiling Lights
- Task Lighting
- Carriage Lanterns

18W / 26W CFL Equivalent

High Performance 8W LED Omni-Bulb

AC Direct **Type B**

The HyLite High Performance LED Omni-Bulb is an ideal Energy-Efficient replacement for CFL & Incandescent Bulb installations in Existing & New Fixtures. The 8W HyLite LED Omni-Bulb provides 360° Energy-Efficient Illumination and replaces 18W/26W CFL Bulbs, effectively reducing Energy Consumption by 56%-69%, and as much as 89% when replacing 75W Incandescent Bulbs. HyLite LED Omni-Bulbs are rated up to 50,000 hours of Lamp Life. This is 50 times longer than a traditional Incandescent Bulb, and 7 times longer than a CFL Bulb. This significantly reduces Energy Usage and Costs as well as Maintenance Expenditures.

- Easy Installation & Retrofitting: Simply Bypass Ballast and Plug-in. Runs on AC Direct Line Voltage. Eliminates Compatibility, Power Loss & Lifetime Issues and Maintenance Costs associated with Ballasts
- Full Brightness with Instant On and Instant Restrike
- Optimal Design for Horizontal or Vertical Mount Sockets
- >80 CRI for Great Visibility
- Suitable for Dry or Damp Location
- Universal Voltage: 100-277V, AC
- Heat & Impact Resistant, UV Protected, Non-Yellowing, Optical Grade Lens
- Excellent Heat Dissipation with Proprietary-Designed Heat Sink
- Cool Operation: Does not add to Heat Load (up to 90% less heat than Incandescent) while producing Brilliantly Bright Light
- Non-Combustible. Made from Flame Retardant, Engineered Polymer, the Base is Mechanically Strong and Heat-Resistant up to 435°F (225°C)
- Safe and Reliable: Isolated Circuit Design
- Maintenance-Free Operation: Lasts up to 50 times longer than Incandescent Bulb. Lowers Costs by Reducing Relamp Frequency
- Safe: Contain No Hazardous Materials; RoHS Compliant: No Lead, Mercury, Toxic Metals or Arsenic Gases. No Disposal Requirements. Facilitates LEED® points
- No Electro-Magnetic (EMi) or Radio Frequency Interference (RFi)
- Environmentally Friendly: 98% of the HyLite LED Lamp is Recyclable

Not Suitable for Enclosed Fixtures

CLASSIFIED c UL us E361357 FC CE Pb lead-free RoHS 2002/95/EC

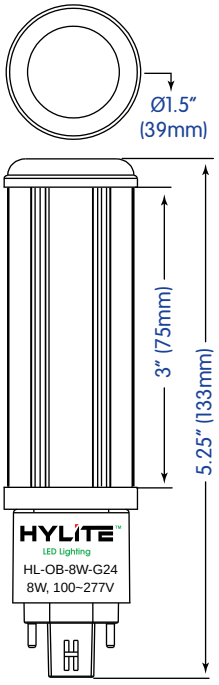

HyLite LED Omni-Bulbs offer a truly universal G24 base - designed to replace both 2-pin and 4-pin G24 bases listed below:

G24d	G24q	Gx24d	Gx24q
G24d-1	G24q-1	Gx24d-2	Gx24q-1
G24d-2	G24q-2	Gx24d-3	Gx24q-2
G24d-3	G24q-3		Gx24q-3
			Gx24q-4

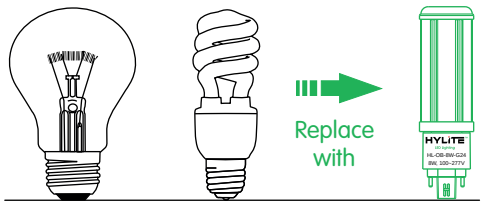

98% RECYCLABLE

NO LEAD, MERCURY, HEAVY METALS OR TOXIC GASES

Universal Burning Positioning

Lamp can be oriented in any position
- does not affect or diminish the life of the lamp

HYLITE™
LED Lighting

LED
OMNI-BULB™
AC Direct | Type B

As part of the company's continuous product improvement program, HyLite reserves the right to change materials or modify the design of its product without notification. All Specifications subject to change without notice. All values are design and/or typical values when measured under laboratory conditions. Actual Values depend upon the ambient temperature of the installation location. Please consult factory for your specific requirements.

Model No.	Watts	Delivered Lumens	Input Line Current	Dimensions and Weight (each)		
				Width	Height	Net Weight
HL-OB-8W-G24	8	898	65mA@120V	1.5" (39mm)	5.25" (133mm)	3.5 oz. (100g)

- Efficacy: 110 LpW
- CRI: >80
- Beam Angle: 360°
- THD (%): <7%
- Universal Input Voltage 100~277V, AC 50/60 Hz.
- Power Factor: >0.98
- Protection: IP20
- Rated Life: 50,000 Hrs.*
- Warranty: 5 Years
- Ambient Working Temperature: -4°F~+104°F (-20°C~+40°C)
- Base Type: G24
- CCT: 3500K (Neutral White), 4000K (Cool White) and 5000K (DayLight)

** Depending upon the ambient temperature of the installation location*

WARNING
Not Suitable for Totally Enclosed Luminaires or Fully Enclosed Fixtures

HyLite Omni-Bulb, HL-OB-8W-G24
Photometrics

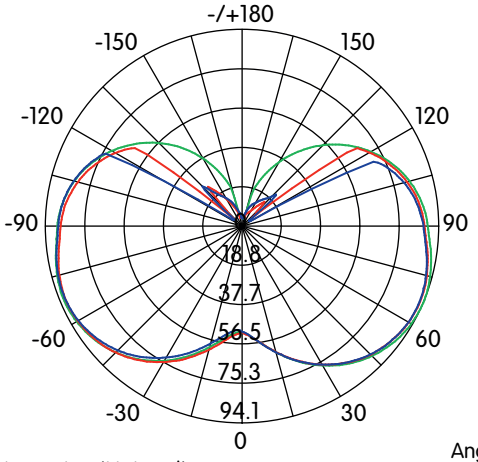

Intensity: (Unit, cd)

	Angle [50% Max.]	[10% Max]
C180/360	283.5°	329.6°
C0/180	253.7°	306.6°
C90/270	237.3°	322.0°

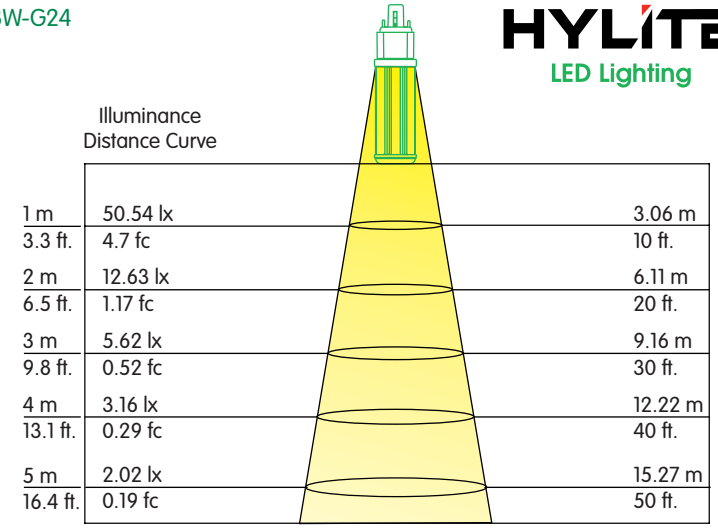

Note: The Curves indicate the illuminated area and the average illumination when the luminaire is at different distance

Ordering for HyLite 8W LED Omni-Bulb with G24 Base

Model / Base	Nominal Color Temperature (CCT, °K)	
HL-OB-8W-G24	-35K	3500K = Neutral White (NW)
	-40K	4000K = Cool White (CW)
	-50K	5000K = DayLight (DL)

Warning: Disable all Power to the Luminaire. HyLite LED Omni-Bulbs are designed to work off 100V~277V, AC. HyLite 8W LED Omni-Bulbs are not compatible with Electronic Ballasts. Electronic Ballast (if equipped) must be Bypassed or removed from the Luminaire before installing the Lamp. Failure to Follow Instructions will VOID Warranty. It can also result in an Electric Shock, or Fire. NOT FOR TOTALLY ENCLOSED LUMINAIRES OR EMERGENCY LIGHTING. NOT FOR USE WITH DIMMERS.

Warning - Risk of Fire or Electric Shock

- For use in Dry or Damp Locations. Do not use where directly exposed to Liquid, Vapor, Rain or Weather. Non-Submergible (not water tight).
- Operate in Fixtures that provide the free flow of air around the Lamp. This will ensure Lumen Maintenance and Extend Its Working Life. When Products are used in Outdoor Fixtures, ensure the space is Waterproof and Well-Ventilated.
- The Installer must determine and verify whether 120V to 277V AC is being utilized at the Luminaire before Installation. Improper Voltage matching can result in Performance Degradation and/or Physical Damage. These Lamps work on Line Voltage and require all Ballasts and Starters to be Bypassed.
- Wiring modification for HyLite LED Lamp Installation requires knowledge of Luminaire Electrical Systems. If not qualified, DO NOT attempt Installation. Contact a Qualified Electrician.
- Luminaire Wiring, Ballast, or other Electrical Parts may be Damaged when Installing. Always check for enclosed Wiring and Components.
- To prevent Wiring Damage or Abrasion, DO NOT expose Wiring to edges of Sheet Metal or other Sharp Objects.
- DO NOT Make or Alter any Open Holes in an Enclosure for Wiring or Electrical Components during Installation.
- DO NOT Block Light emanating from Product in Whole or Part, as this may Cause an Unsafe Condition.
- Installing Surge/Lightning Protectors is Highly Recommended and helps to Eliminate Premature Driver Failure caused by Surges and other Power Fluctuations.
- The End Retrofit Fixture, once Modified, can No Longer Operate as was Originally Intended.

© 2016-2018 HyLite LED, LLC., USA

GLOBAL ENERGY & LIGHTING

GLEDPHB2 100W

PURE HIGH BAY SPECIFICATION SHEET

OPTICAL SPECS

System Efficacy	Up to 130 Lm/W (CCT = 50K)
Lumen Output	13,000 Lumens (CCT = 50K)
CCT	30K / 40K / 50K
CRI	70 / 80 Ra
Beam Angle	50°, 90°, 120°

ELECTRICAL SPECS

System Power Usage	100W
Input Voltage	AC 100 - 277 Volts
Power Frequency	50 ~ 60 Hz
Power Factor	> 0.92
Total Harmonic Distortion	< 15%

CERTS

RoHS

FC

CE

CB

c UL us LISTED

DIMENSIONS

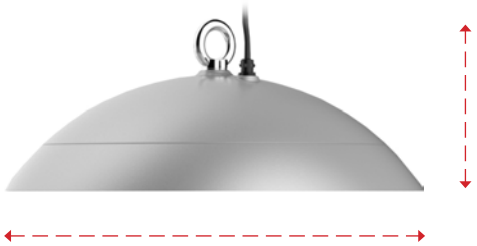

Diameter: 19.25in (489 mm)
Height: 7.8 in (200 mm)

BEAM ANGLES

50° 90° 120°

OTHER DETAILS

Fixture Material	Aluminum Alloy
Ingress Protection	IP66
Luminaire Net Weight	7.2 ± 0.3 Kg
Lifespan	> 50,000 Hours
Operating Humidity	15 - 90%
Operating Temperature	-22° ~ 122°F (-30° ~50°C)
Storage Temperature	-40° ~ 158°F (-40° ~70°C)
Product Dimensions	ø19.25 x 7.8 in (ø489 x 200 mm)
Standard Cord Length	1.5 Meter

FIXTURE ACCESSORIES

Bezel Color	● ● ○ ● ● ●
Alternate Lens	Frosted or Clear PC
Cord Options	Length / Type

*Consult your GEL sales representative or the DLC QPL for specific model certifications.

Standard Fixture:Silver Bezel with 120° Beam Angle

GLEDPHB2 SKU CREATOR

After choosing options to create the perfect controlled fixture for your space, this chart will help you create the correct SKU necessary to order.

PURE HIGH BAY

PRODUCT	WATTAGE	A CCT	B BEAM ANGLE
GLEDPHB2	100W	30K / 40K / 50K	50 / 90 / 120
GLEDPHB2	120W	30K / 40K / 50K	50 / 90 / 120
GLEDPHB2	150W	30K / 40K / 50K	50 / 90 / 120
GLEDPHB2	200W	30K / 40K / 50K	50 / 90 / 120

Create your SKU:

GLEDPHB2			
PRODUCT	WATTAGE	CCT	BEAM ANGLE

Accessory SKUS (if applicable)

Fixture Quantity

SKU CREATOR **GUIDELINES**

- Options in chart separated by slash (/)
- Choose one option per column.
- All characters must **always** utilize capitalization. No special characters (/, &, #, etc.) will be permitted.
- White space in between columns indicates single space in SKU.

SKU CREATOR **CATEGORY KEY**

A **CCT -** COLOR TEMPERATURE

30K - 3,000 Kelvin
40K - 4,000 Kelvin
50K - 5,000 Kelvin

B **BEAM ANGLE**

Degrees at which light is distributed. Photometrics diagrams can be found on the options page.

ACCESSORY SKUS

Order accessories as separate part number from your Fixture SKU.
Learn more about these options on the Accessories Page.

ALTERNATE LENSES	BEZEL COLORS	CORD & PLUG ENDS
GLEDPHB2A Clear PC Lens	GLEDPHB2A BC Custom	GLEDPHB2A CC
GLEDPHB2A Frosted PC Lens	GLEDPHB2A BC Red	GLEDPHB2A EXT 1.5
GLEDPHB2A 120 Lens	GLEDPHB2A BC Grey	GLEDPHB2A 5-15P
GLEDPHB2A 90 Lens	GLEDPHB2A BC White	GLEDPHB2A L5-15P
GLEDPHB2A 50 Lens	GLEDPHB2A BC Yellow	GLEDPHB2A L6-15P
	GLEDPHB2A BC Blue	GLEDPHB2A L7-15P
	GLEDPHB2A BC Black	GLEDPHB2A L7-20P

NOTES

FIXTURE OPTIONS

PHOTOMETRICS

For certification information or questions concerning beam angle options, please consult your GEL sales representative.

50°

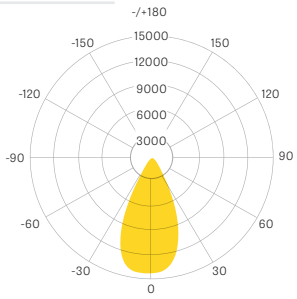

90°

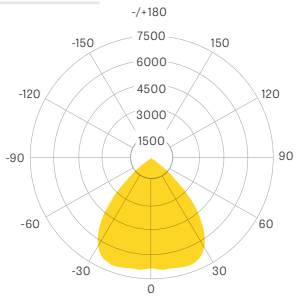

120°

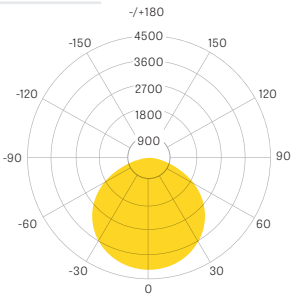

ALTERNATE LENSES

50 / 90 / 120

Polycarbonate Optic lenses which set beam angle to 50°, 90° or 120°.

GLEDPHB2A (50, 90 or 120) Lens

Clear Polycarbonate

Clear cover maximizes light. Beam angle approximately 120°.

GLEDPHB2A Clear PC Lens

Frosted Polycarbonate

Frosted coverage diffuses light and reduces glare. Beam angle approximately 120°.

GLEDPHB2A Frosted PC Lens

INSTALLATION

LOOP MOUNTING

The Pure High Bay fixture mounts safely through a seamless metal hook.

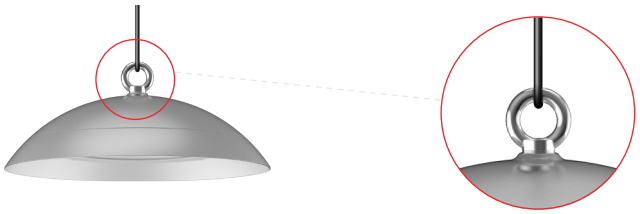

CORD & PLUGS

SKU	DESCRIPTION
GLEDPHB2A EXT 1.5	1.5 Meter Cord Extension (3 meters overall)
GLEDPHB2A 5-15P	Straight Blade 120v NEMA 5-15P Plug End
GLEDPHB2A L5-15P	Twist Lock 120v NEMA L5-15 Plug End
GLEDPHB2A L6-15P	Twist Lock 208/240v NEMA L6-15 Plug End
GLEDPHB2A L7-15P	Twist Lock 277v NEMA L7-15 Plug End
GLEDPHB2A L7-20P	Twist Lock 277v NEMA L7-20 Plug End

SKU	PHOTO
GLEDPHB2A CC IP65 Cable Connector (extends cable length)	

BEZEL COLOR

Customize your fixtures by adding color to integrate them more thoroughly into your space or connect them with your brand. As well as the color options pictured here, you also have the option to choose a completely custom bezel color.

Choose a custom color.

Your Choice
GLEDPHB2A BC Custom
(MOQ 500)

RAL3028
GLEDPHB2A BC Red

RAL9017
GLEDPHB2A BC Black

RAL9016
GLEDPHB2A BC White

RAL5005
GLEDPHB2A BC Blue

RAL7042
GLEDPHB2A BC Grey

RAL1018
GLEDPHB2A BC Yellow

NEW
No neutral dual-tech

Dual-technology Maestro® Sensors

Superior in-wall sensors featuring Lutron XCT™ sensing technology

Sensor switch

Dual-circuit sensor switch

Helps meet building codes

- Title 24 2013
- ASHRAE 90.1 2010
- IECC 2012

- **XCT sensing technology with cross-correlation**
  - Enhanced ultrasonic and passive infrared (PIR) technology in the Maestro sensor keeps lights on and reduces false ons
  - Best of both technologies – no callbacks
- **Durable design with modern, clean aesthetic**
  - Tamper-resistant lens
  - 30+ year switch lifetime
  - Available in 27 colors
- **Ideal for retrofit — no neutral required**

LUTRON®

View our sensor videos:

For more information:
www.lutron.com/OccVacSensors

Order now:
Contact your local electrical distributor

Lutron dual-technology Maestro® sensors minimize callbacks

XCT™ technology with cross-correlation — won't leave you in the dark

Lutron XCT technology can recognize the difference between fine human motion and background noise.

☑ Very Fine Motion

Minimal movements like typing on a keyboard

☑ Fine Motion

Small movements like flipping pages of a book

☑ Minor Motion

Movements like extending your arm

☑ Major Motion

Person walking 3 feet

NEW!

XCT technology now available for dual-technology sensors.
Dual-technology sensors use PIR and ultrasonic technologies together for maximum sensitivity.

Lutron sensors are engineered with robust components, and combined with award-winning aesthetics

Available in 27 colors

30+ year switch lifetime (250,000 on/off switch cycles)

Tamper-resistant lens

Gloss colors:

- White (WH)
- Ivory (IV)
- Almond (AL)
- Light Almond (LA)
- Gray (GR)
- Brown (BR)
- Black (BL)

Satin Colors®:

- Hot (HT)
- Merlot (MR)
- Plum (PL)
- Turquoise (TQ)
- Sea Glass (SG)
- Midnight (MN)
- Sienna (SI)
- Terracotta (TC)
- Greenbriar (GB)
- Bluestone (BG)
- Taupe (TP)
- Eggshell (ES)
- Biscuit (BI)
- Snow (SW)
- Palladium (PD)
- Mocha Stone (MS)
- Goldstone (GS)
- Desert Stone (DS)
- Stone (ST)
- Limestone (LS)

Dual-technology Maestro® sensor product information

Mistake-proof wiring

NEW **No neutral required model**

- Installs fast — versions with or without neutral wire
- No polarity for line or load wiring
- Any voltage — 120-277V, any phase or mixed phases — A, B, or C
- For 3-way control with an existing switch, use neutral-required model

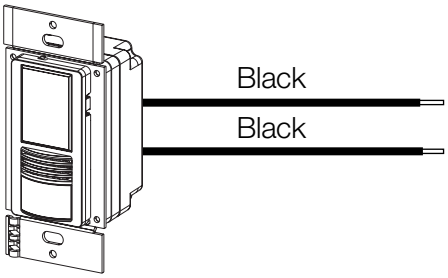

Sensor switch

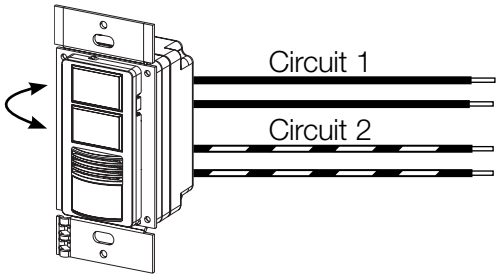

Dual-circuit sensor switch

Easily reassign circuits
Change circuits with a simple button press—no rewiring required

Easy set up

- Independent setting per circuit
- Easy to see LEDs indicate settings
- No dip switches or dials
- Simple button press to change settings
  - Timeout
  - Sensitivity (ultrasonic)
  - Sensitivity (PIR)
  - Mode
    - Occupancy
    - Ambient light detection (learning)
    - Ambient light detection (fixed)
    - Vacancy

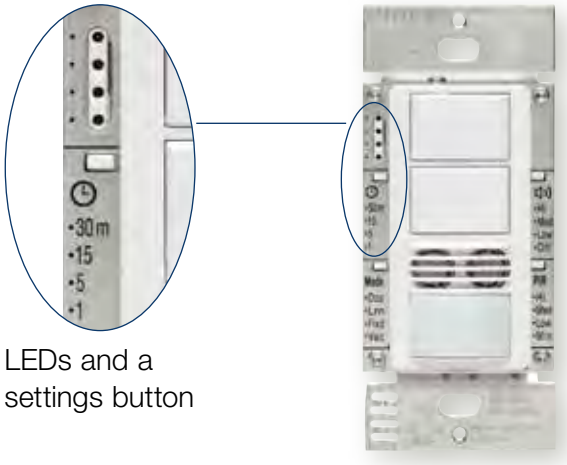

LEDs and a settings button

Controls all lighting and fan loads

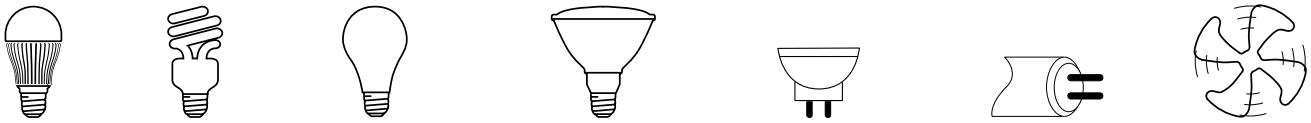

LED | CFL | Incandescent/ halogen | Magnetic low voltage | Electronic low voltage | Fluorescent | Fan

120V to 277V, 6A

4.4A (120V only)

All Lutron products backed by world-class support

- 24/7 live technical support 1.800.523.9466
- Customer service/quotes 1.888.588.7661

Ordering information
Dual-technology Maestro® occupancy/vacancy sensors

Models	Model number	Specifications	Voltage
No neutral required (shipping 7/1/14)			
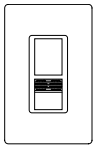	MS-A102-XX[1,2]	Single pole Single-circuit model 6 A lighting 4.4 A fan (120 V only)	**120-277 V~**
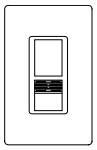	MS-A202-XX[1]	Single pole Dual-circuit model 6 A lighting per circuit 4.4 A fan (120 V only) per circuit	**120-277 V~**
Neutral required			
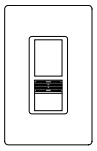	MS-B102-XX[1,2]	Single pole/multi-location[3] Single-circuit model 6 A lighting 4.4 A fan (120 V only)	**120-277 V~**
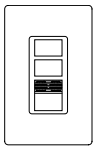	MS-B202-XX[1]	Single pole/3-way Dual-circuit model 6 A lighting per circuit 4.4 A fan (120 V only) per circuit	**120-277 V~**

[1] XX denotes color suffix (above)
[2] Vacancy-only models available
[3] Multi-location switches work with up to nine companion switches

Additional Lutron sensors

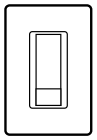
Maestro PIR single-circuit sensors

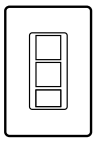
Maestro PIR dual-circuit sensors

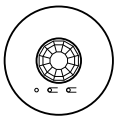
Radio Powr Savr™ wireless sensors

Code information

Sensors help meet stringent code requirements

- ASHRAE 90.1-2010, Title 24 2013, and IECC 2012
  - Meets automatic shutoff
  - Meets multi-level lighting controls requirement (dual-circuit model)
- For more information, visit www.lutron.com/energycodes

www.lutron.com/OccVacSensors
World Headquarters 1.610.282.3800
Technical Support Center 1.800.523.9466 (Available 24/7)
Customer Service 1.888.588.7661

LUTRON®

save energy with Lutron™

© 03/2014 Lutron Electronics Co., Inc. P/N 367-2458 REV B

369652b 1 05.04.12

Dual Technology Ceiling Mount Sensor

The ULOS-CDT Series ceiling-mount dual-technology sensors can integrate into Lutron systems or function as stand-alone controls using a Lutron power pack. The technology eliminates manual sensitivity and timer adjustments during installation and over the life of the product.

Features

- Intelligent, continually adapting sensor
- Ultrasonic (US) combined with passive infrared (PIR) sensing provide high sensitivity, high noise immunity, and excellent false tripping immunity
- Suited for complex environments that are difficult to control with single-technology sensors
- Snap-locks to ceiling-mounted cover plate
- Non-Volatile Memory: settings saved in protected memory are not lost during power outages
- 500 to 2000 sq ft (46 to 186 m^2) coverage when mounted on an 8 - 12 ft (2.4 to 3.7 m) ceiling; 180° and 360° field of view
- Affords choice of turning lights off or dimming to a preset level in the unoccupied state when integrated with a Lutron system.
- Assembled in the USA.

Models Available

Cat. No.	Color	Coverage	Field of View
ULOS-CDT-500-WH	White	500 sq ft (46 m^2)	180°
ULOS-CDT-500R-WH	White	500 sq ft (46 m^2)	180°
ULOS-CDT-1000-WH	White	1000 sq ft (93 m^2)	180°
ULOS-CDT-1000R-WH	White	1000 sq ft (93 m^2)	180°
ULOS-CDT-2000-WH	White	2000 sq ft (186 m^2)	360°
ULOS-CDT-2000R-WH	White	2000 sq ft (186 m^2)	360°

Self-Adaptive Feature

The ULOS-CDT Series ceiling-mount occupant sensors combine both (US) motion detection for maximum sensitivity and passive infrared (PIR) motion detection for false triggering immunity. The self-adapting internal microprocessor analyzes the composite sum of both signals to eliminate time-consuming adjustments and callbacks found in non-intelligent sensors.

Job Name:	Model Numbers:
Job Number:	

Specifications

Timer Adjustment

- Automatic mode: Continually adapting sensor automatically adjusts settings to the space
- Manual mode: 8 to 30 minutes
- Test mode: 8 seconds

LED Lamp

- Red: infrared motion detected
- Green: ultrasonic motion detected

Housing

- Rugged, high-impact, injection-molded plastic
- Color-coded leads 6 in (15 cm)

Power

- Operating voltage: 20 - 24 V⎓, PELV (Class 2: USA) low-voltage
- Operating current: 33 mA nominal
- Control output: 20 - 24 V⎓ active high logic control signal with short-circuit protection, open collector when unoccupied

Operating Environment

- Temperature: 32 to 104 °F (0 to 40 °C)
- Relative humidity: less than 95%, non-condensing
- For indoor use only

Adaptive Functions

- Installation: 60 minutes
- Learning: 4 weeks for response to error conditions, air current adaptation, and timer optimization
- Post-learning occupancy periods
  - —24-hour circadian occupancy periods learned
  - —Weekly occupancy periods learned
- Adjustments in post-learning period
  - —Generally occupied periods (threshold = high-sensitivity mode)
  - —Generally unoccupied periods (threshold = miser mode)

Contact Rating (R Models only)

- SPDT 500 mA rated at 24 V⎓ isolated relay

Photo Cell (R Models only)

- Prevents light from turning on when there is sufficient natural light
- Sensitivity: 0 - 1000 LUX adjustable

Dimensions

Measurements are in inches (mm)

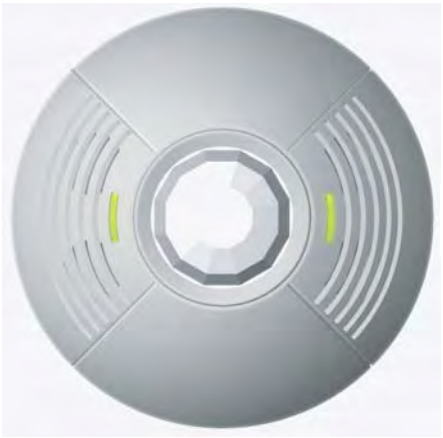

Front View

Side View

Job Name:	Model Numbers:
Job Number:	

Wiring

Note: Power pack may be required when interfaced to lighting control system; see below.

Single Sensor to System

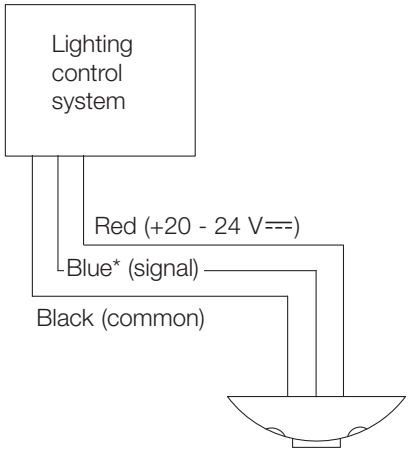

2 or More Sensors to System

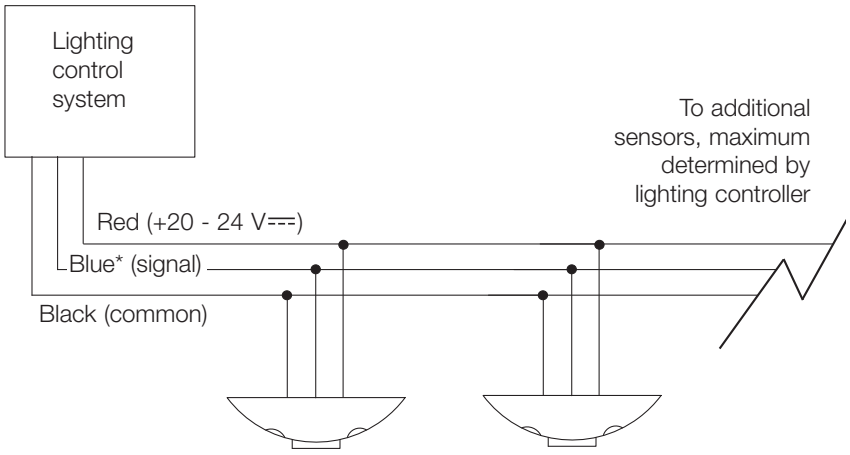

*Note: Use gray wire for -R model.

Power Supply Options

Lutron Lighting Control System	Power Pack Required?
Digital microWATT™	No
EcoSystem®	No
GRAFIK 5000 / 6000 / 7000™	No, when used with seeTouch® wallstations with occupant sensor connections.
GRAFIK Eye® 3000 / 4000	Yes
HomeWorks®	Yes
LCP128™	No, when used with seeTouch® wallstations with occupant sensor connections.
microWATT®	No
RadioRA®	Yes
RadioTouch®	No
Softswitch128®	No, when used with seeTouch® wallstations with occupant sensor connections.

NOTE: Power Pack may be required for more than one Occupant Sensor. Consult factory for multiple sensor requirements.

Job Name:	Model Numbers:
Job Number:	

Wiring: Stand-Alone Control

1 to 3 Sensors with Power Pack

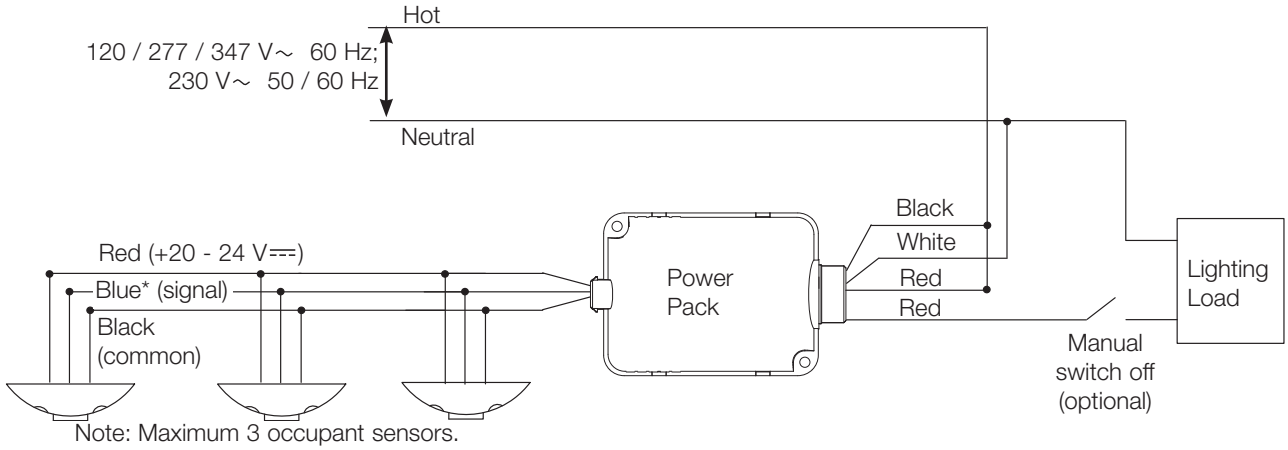

Switching Multiple Loads with Auxiliary Power Packs

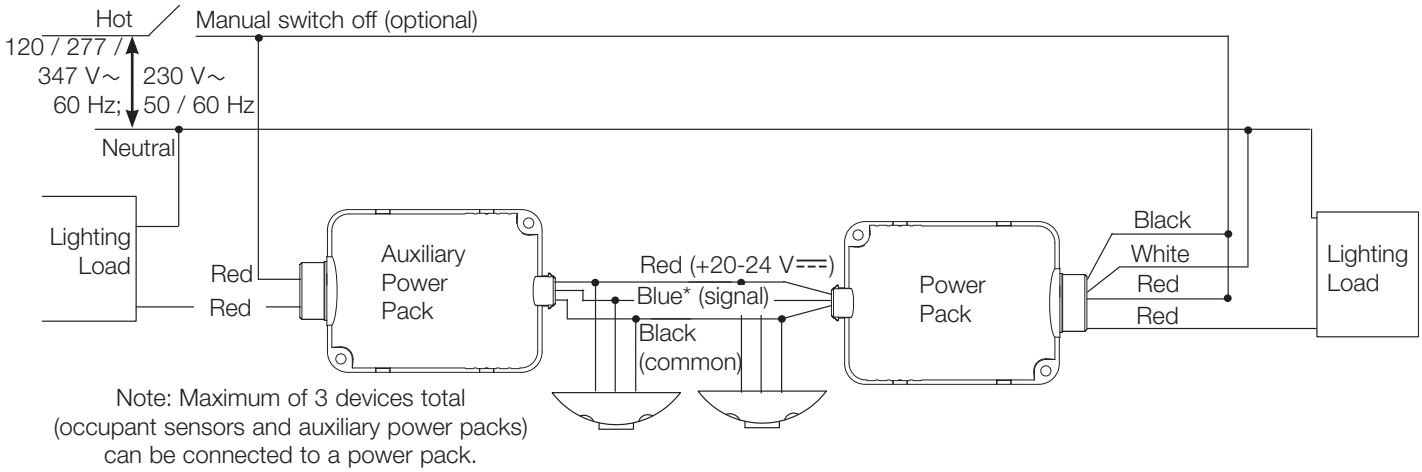

*Note: Use gray wire for -R model.

Job Name:	Model Numbers:
Job Number:	

Wiring

Relay Model Option

LOS-CDT-xxxxR only

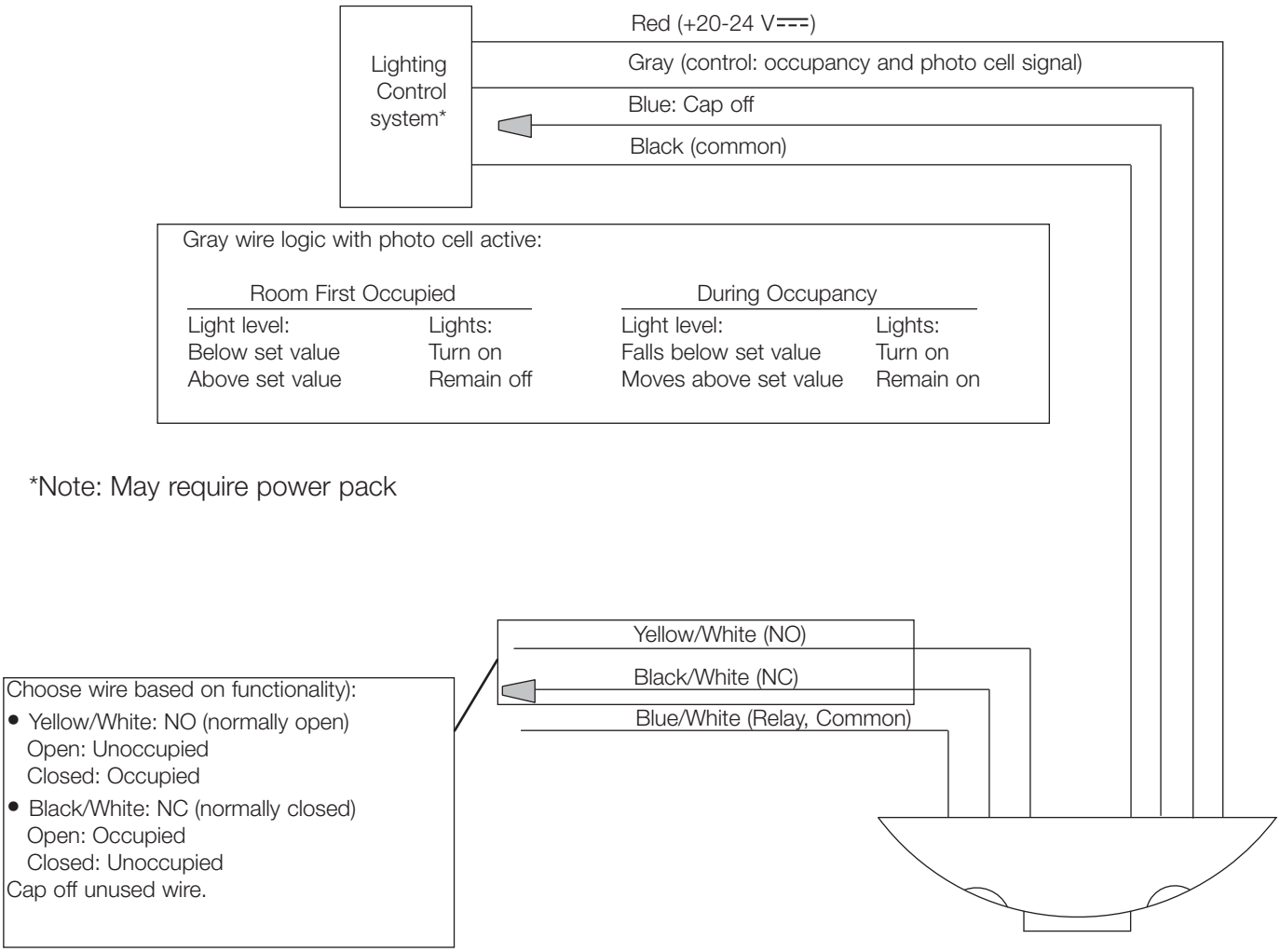

*Note: May require power pack

Job Name:	Model Numbers:
Job Number:	

Installation

Sensor Placement

- The occupant sensor must have an unobstructed view of the room. Do not mount behind or near tall cabinets, shelves, indirect hanging fixtures, etc.
- Do not place sensor within 6 ft (1.8 m) of air vents, air handlers, windows, fans, etc., as this may cause false triggering.
- If installing a 180° occupant sensor (500 and 1000 models), place the sensor on the same wall as the doorway so that traffic in a hallway will not affect the sensor; otherwise, place in center of room.
- Closely follow the diagrams shown concerning major and minor motion coverage. The sensor can detect major motion (such as a person taking a half-step) at a greater distance than it can detect minor motion (such as writing or typing at a desk).
- Decrease total coverage area by 15% for “soft” rooms (for example, heavy draperies or heavy carpeting).

Range Diagrams

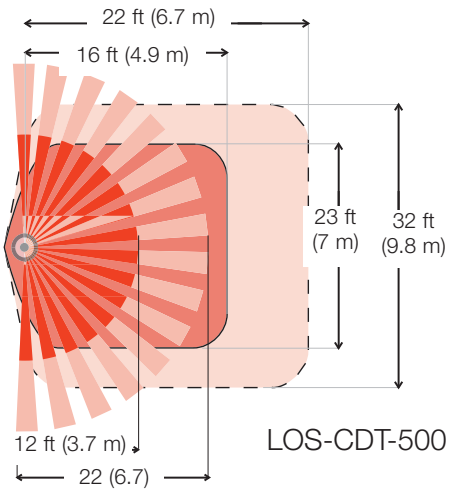

LOS-CDT-500

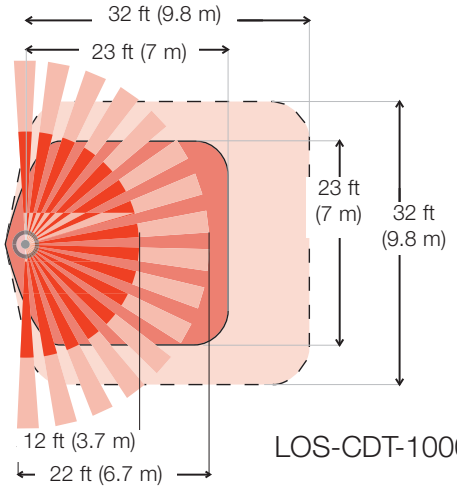

LOS-CDT-1000

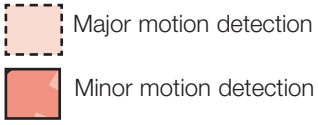

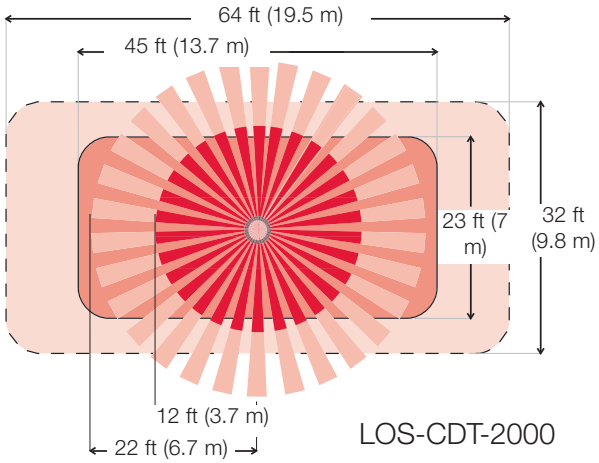

LOS-CDT-2000

Job Name:	Model Numbers:
Job Number:	

Installation

Mounting

Normal Mounting
Twist and lock threaded mounting post onto cover plate. Drill through ceiling tile with assembly, using cutter end of the threaded mounting post. Secure with washer and nut.

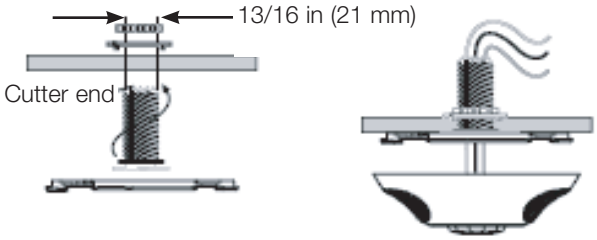

Mounting to Non-Standard Ceiling or Fixture
Mount twist-lock cover plate using mounting screws, nuts, and washers (included). Drill/punch wire routing hole through ceiling tile at center of cover plate.

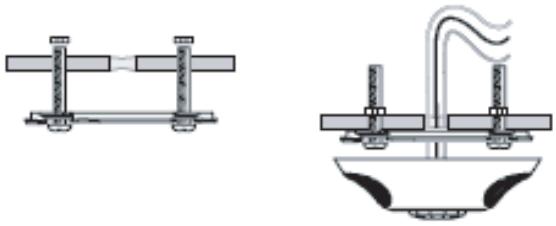

Wire Lengths

# Sensors	1	2	3	1	2	1
# Aux. PP	0	0	0	1	1	2
22 AWG	750 ft	375 ft	250 ft	375 ft	250 ft	250 ft
0.5 mm^2	365 m	180 m	120 m	90 m	120 m	120 m
20 AWG	1200 ft	600 ft	400 ft	600 ft	400 ft	400 ft
0.75 mm^2	730 m	365 m	240 m	365 m	240 m	365 m
18 AWG	2400 ft	1200 ft	800 ft	1200 ft	800 ft	800 ft

Mounting Plate Dimensions

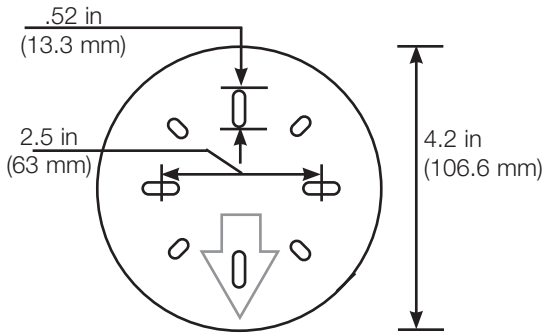

Using the Infrared Mask

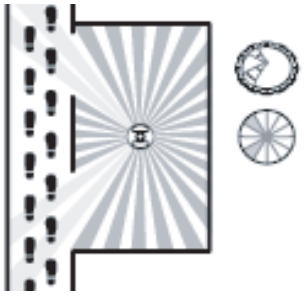

Center Ceiling Mount
(Mask blocks sensor seeing out doorway into hall)

Corner Ceiling Mount
(No mask needed)

Typical Mask Patterns

Conference Room Mask | 180° Mask | Full Mask

Rectangular Areas | Over the Door | Specific Areas You Wish to Mask

Sensor Adjustments

Override Settings

	A	Off (Default)	On
Auto/Manual	1	Automatic (Normal)	Manual on/off (Override)
Threshold	2	Auto Threshold Adjustment	High Sensitivity (Low turn-on threshold)
LED Motion Indicator	3	Lights indicate motion	Disable LED Indicator
Reset Learned Settings	4	Retain Settings (Normal)	Erase all learned settings, restart Learning (Toggle On)

	B	Off	On
Strong Airflow Compensation	1	Disable Compensation (Normal)	Enable Compensation
Over Doorway Installation	2	No (Normal)	Yes (Use increased turn-on threshold)
Timer Adjust	3	Adjust Timer Automatically	Use Manual Setting (No adjustment)
Auto Sensitivity	4	Adjust Sensitivity Automatically	Adjust Sensitivity Manually

Timer Test Mode

1. Remove the retainer cover.
2. Rotate the black timer adjustment knob to about midway (12 o'clock).
3. Return setting to minimum setting (full CCW).

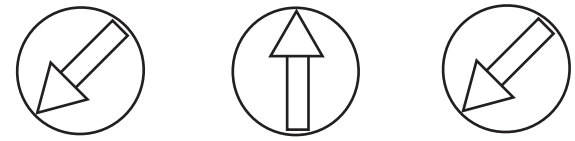

Factory Settings 12 o'clock Full CCW

Note: The timer will remain in the 8-second test mode for 1 hour, then automatically reset to 8 minutes.

4. To manually take the timer out of the 8-second test mode, turn the timer adjustment approximately 1/16 in (1.5 mm) clockwise to make the setting slightly above minimum (just above the 8-minute setting).

Factory Settings

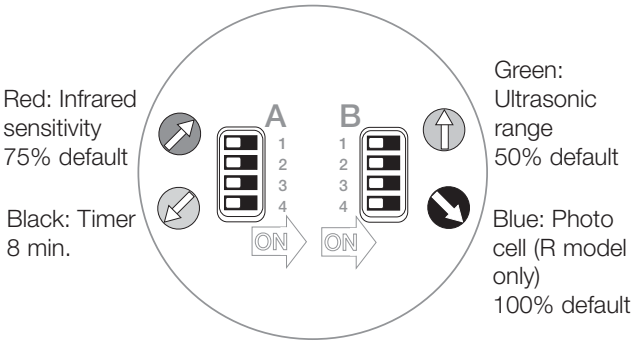

Job Name:	Model Numbers:
Job Number:	

Installation

Adjusting the "Lights Not On" Level

ULOS-CDT-xxxxR only

1. Place timer in Test Mode (see page 7).
2. Set photo cell to max.
   Turn the blue knob full clockwise (lights on no matter how bright the natural light is), then about 30 degrees counterclockwise.
3. Check for Lights-Out.
   Move from underneath the sensor, and remain still until the lights turn off. Move around normally to turn the light on.
4. Adjust to desired level.
   If lights remain off, adjust the blue knob another 30 degrees counterclockwise and repeat step 3 until the lights turn on.
   Note: Set blue knob to 100% to disable photo cell functionality and leave secondary dry contact closure output functionality intact.

Control Settings (Blue Knob)

ULOS-CDT-xxxxR only

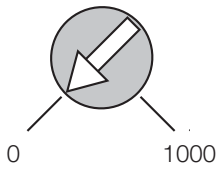

Minimum (low):
Lights will never come on, even though room is occupied.

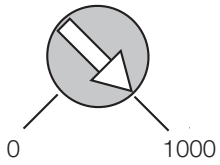

Maximum (high):
Photo cell has no effect on operation (factory setting).

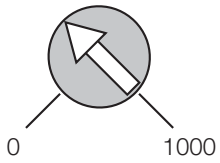

Normal:
200 to 600 LUX is normal range.

Job Name:	Model Numbers:
Job Number:	

Savings Calculations

ECM #3 Central Heating Plant Upgrades

Baseline Energy Balance

Date	Boiler Input (mmBtu)	Boiler Ouput (mmBtu)	DA Usage (mmBtu)	Plant Steam (HW & Stm) (mmBtu)	Kitchen & Laundry Steam (mmBtu)	Plant HW HX (mmBtu)	HW HX Losses (mmBtu)	UG Pipe Losses (HW) (mmbtu)	Delivered to Bldg (mmbtu)	DHW (mmBtu)	Bldg HW HX Losses (mmBtu)	Space Heating Load (mmBtu)
January	8,318	6,488	382	**6,106**	1,332	**4,774**	477	234	**4,062**	889	58	3,115
February	9,541	7,442	430	**7,012**	1,118	**5,894**	589	229	**5,075**	803	52	4,220
March	9,753	7,608	448	**7,160**	1,267	**5,893**	589	234	**5,070**	889	58	4,123
April	6,019	4,695	293	**4,402**	1,366	**3,036**	304	233	**2,500**	860	56	1,583
May	5,626	4,388	280	**4,108**	1,435	**2,674**	267	234	**2,172**	889	58	1,225
June	4,795	3,740	231	**3,509**	1,428	**2,081**	208	233	**1,640**	860	56	724
July	4,685	3,654	225	**3,429**	1,490	**1,940**	194	234	**1,511**	889	58	564
August	4,806	3,749	264	**3,485**	1,450	**2,035**	203	234	**1,597**	889	58	650
September	4,697	3,664	232	**3,432**	1,427	**2,005**	201	233	**1,572**	860	56	655
October	5,401	4,213	272	**3,941**	1,442	**2,499**	250	234	**2,015**	889	58	1,068
November	7,773	6,063	374	**5,689**	1,285	**4,404**	440	233	**3,731**	860	56	2,815
December	9,562	7,458	441	**7,017**	1,273	**5,744**	574	234	**4,935**	889	58	3,988
Totals	**80,976**	**63,162**	**3,872**	**59,290**	**16,312**	**42,977**	**4,298**	**2800**	**35,880**	**10,469**	**681**	**24,730**
Percent of Total			6.1%		25.8%	68.0%	6.8%	4.4%	56.8%	-		39.2%
									44%			
Boiler Combustion Eff.		78%										

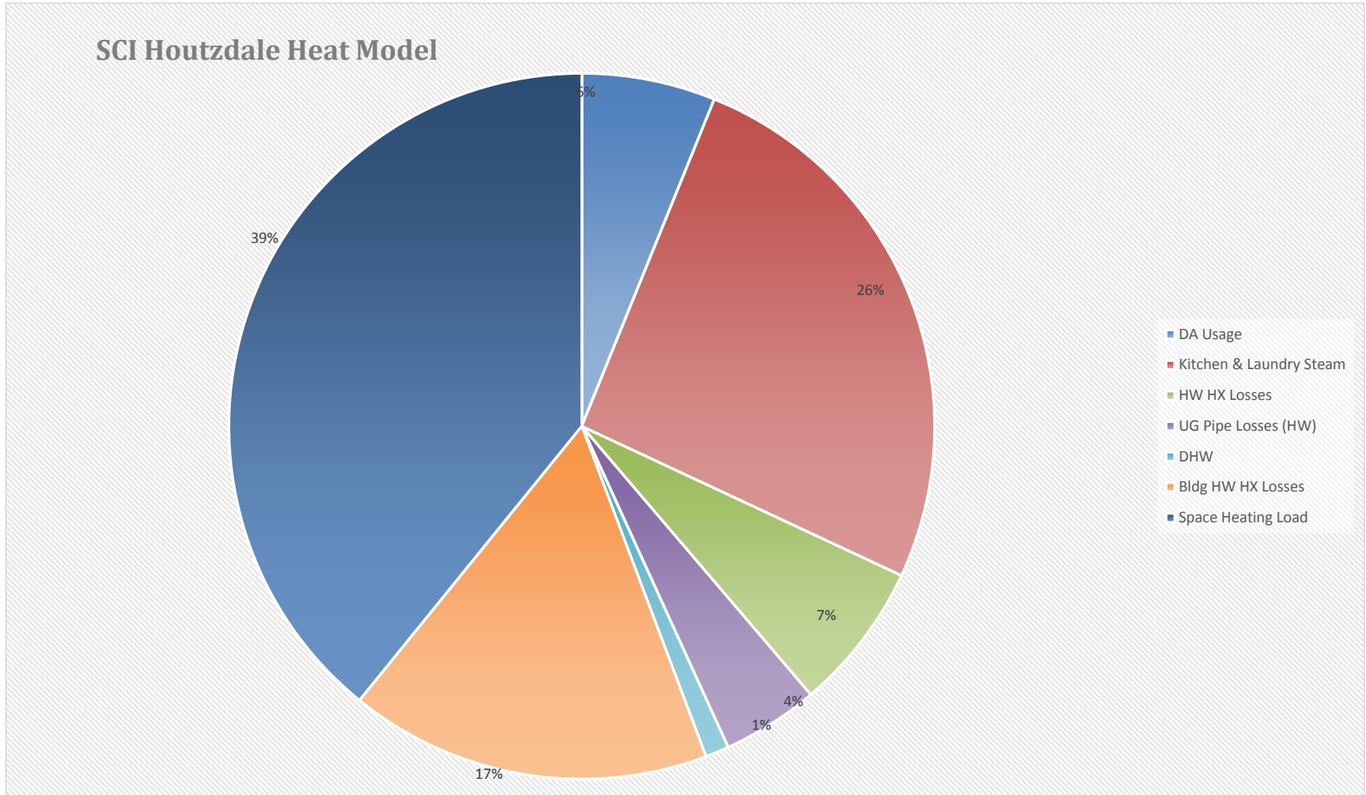

SCI Houtzdale - FY2017 Fuel Consumption and Steam Production Summary

Date	Coal Usage (Tons)	Coal Unit Cost ($/Ton)	Coal Total Cost ($)	Steam from Coal (Lbs)	Overall Efficiency	Oil Usage (Gal)	Oil Unit Cost ($/Gal)	Oil Total Cost ($)	Steam from Oil (Lbs)	Overall Efficiency	Fuel Input (mmBTUs)	Boiler Output (mmBTU)	Overall Efficiency
January-17	241	$97.33	$23,457	4,506,078	77.91%	20,319	$1.71	$34,745	1,981,924	70.17%	8,602	6,488	75.42%
February-17	289	$97.03	$28,042	5,715,005	82.40%	17,215	$1.69	$29,093	1,727,114	72.18%	9,324	7,442	79.82%
March-17	208	$97.03	$20,182	4,908,658	98.33%	26,194	$1.62	$42,434	2,698,890	74.13%	8,625	7,608	88.21%
April-17			$0			43,535	$1.65	$71,833	4,695,000	77.59%	6,038	4,695	77.76%
May-17			$0			40,656	$1.57	$63,830	4,388,000	77.65%	5,639	4,388	77.82%
June-17			$0			34,651	$1.54	$53,363	3,740,000	77.65%	4,806	3,740	77.82%
July-17			$0			34,625	$1.52	$52,630	3,654,000	75.92%	4,802	3,654	76.09%
August-17			$0			34,625	$1.68	$58,170	3,749,000	77.90%	4,802	3,749	78.07%
September-17			$0			34,689	$1.82	$63,134	3,664,000	75.99%	4,811	3,664	76.16%
October-17			$0			39,660	$1.87	$74,164	4,213,000	76.42%	5,500	4,213	76.59%
November-17			$0			57,106	$1.95	$111,357	6,063,000	76.38%	7,920	6,063	76.55%
December-17			$0			69,913	$1.98	$138,428	7,458,000	76.74%	9,696	7,458	76.92%
Totals	738		$71,680	15,129,741	85%	453,188		$793,181	48,031,928	76.4%	80,565	63,162	78.4%

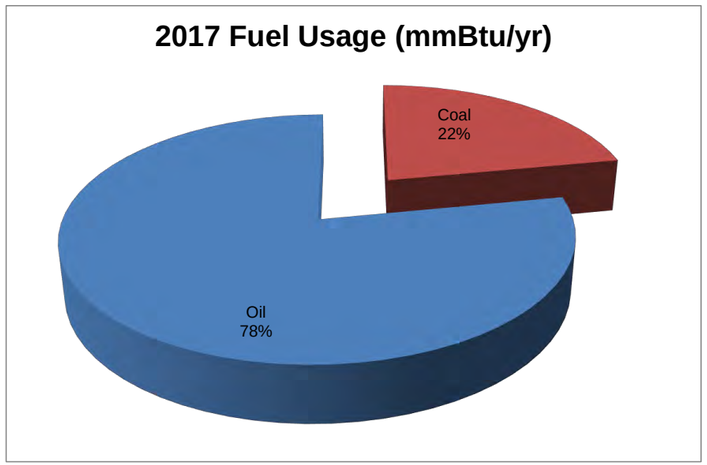

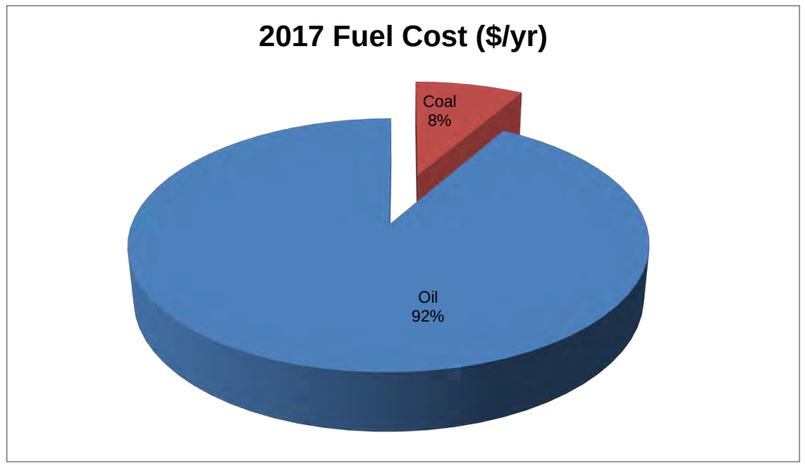

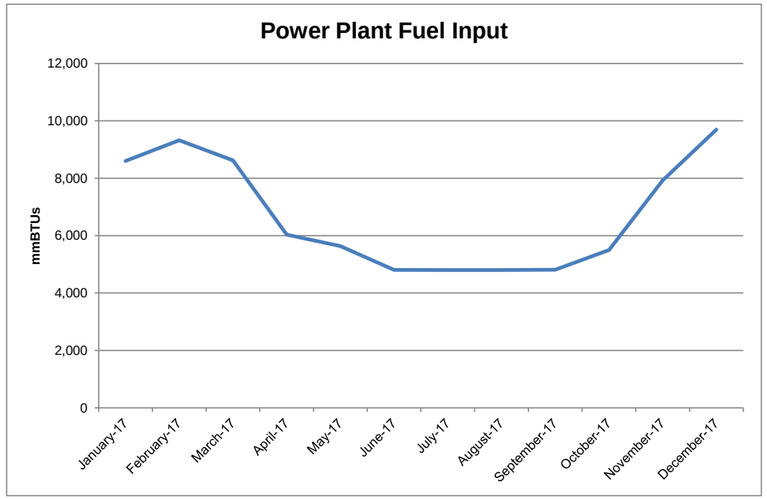

Baseline

Houtzdale - Existing Motor Energy Use

	HP	Number	Total HP	KW / HP	VFD	Total KW	% Max Load	Baseline Eff.	KW	Hours Operating	kWh	Demand Total (kW)	Annual Total (kWh)	Average Hourly Load (kWh)
Feedwater Pump	25	1	25	0.746		18.65	80%	75%	19.89	4380	87,133			
Feedwater Pump	25	1	25	0.746		18.65	80%	75%	19.89	4380	87,133			
Feedwater Pump	10	1	10	0.746		7.46	80%	75%	7.96	8760	69,706			
Pri HW Dist. Pump	7.5	1	7.5	0.746		5.595	80%	75%	5.97	4380	26,140			
Pri HW Dist. Pump	7.5	1	7.5	0.746		5.595	80%	75%	5.97	4380	26,140			
Pri HW Dist. Pump	7.5	0	0	0.746		0	80%	75%	0.00	0	-			
Sec HW Dist. Pump (3 & 4)	7.5	1	7.5	0.746	yes	5.595	80%	75%	5.97	4380	26,140	294	1,324,419	151
Sec HW Dist. Pump (3 & 4)	7.5	1	7.5	0.746	yes	5.595	80%	75%	5.97	4380	26,140			
Sec HW Dist. Pump (1 & 2)	150	1	150	0.746	yes	111.9	40%	75%	59.68	4380	261,398			
Sec HW Dist. Pump (1 & 2)	150	1	150	0.746	yes	111.9	40%	75%	59.68	4380	261,398			
Ter HW Dist Pump	125	1	125	0.746	yes	93.25	40%	75%	49.73	4380	217,832			
Ter HW Dist Pump	125	1	125	0.746	yes	93.25	40%	75%	49.73	4380	217,832			
Condensate Return	5	1	5	0.746		3.73	80%	75%	3.98	4380	17,427			
Condensate Return	5	0	0	0.746		0	80%	75%	0.00	0	-			
FD Fan	20	1	20	0.746		14.92	80%	75%	15.91	1095	17,427			
FD Fan	20	1	20	0.746		14.92	80%	75%	15.91	1095	17,427			
ID Fan	60	1	60	0.746		44.76	80%	75%	47.74	1095	52,280			
ID Fan	60	1	60	0.746		44.76	80%	75%	47.74	1095	52,280			
CB Boiler Burner	75	1	75	0.746		55.95	80%	75%	59.68	3650	217,832	279	566,363	65
KWN Boiler Burner	75	1	75	0.746		55.95	80%	75%	59.68	2920	174,266			
Coal Blower	20	1	20	0.746		14.92	80%	75%	15.91	1095	17,427			
Coal Blower	20	1	20	0.746		14.92	80%	75%	15.91	1095	17,427			
Coal Micronizer	150	1	150	0.746		111.9	80%	75%	119.36	1095	130,699	239	261,398	30
Coal Micronizer	150	1	150	0.746		111.9	80%	75%	119.36	1095	130,699			
Pneumatic Air Comp.	40	1	40	0.746		29.84	80%	75%	31.83	4380	139,412	32	139,412	16
									843.48		2,291,593		**2,291,593**	
							Demand for 12 months		10,121.73					

Electric Model

Month	Hrs/Month	Days per Month	Pumps kWh	Fans kWh	Micronizer & Comp kWh	
January	744	31	112,485	48,102	34,041	
February	672	28	101,599	43,447	30,747	
March	744	31	112,485	48,102	34,041	
April	720	30	108,856	46,550	32,943	
May	744	31	112,485	48,102	34,041	
June	720	30	108,856	46,550	32,943	
July	744	31	112,485	48,102	34,041	
August	744	31	112,485	48,102	34,041	
September	720	30	108,856	46,550	32,943	
October	744	31	112,485	48,102	34,041	
November	720	30	108,856	46,550	32,943	
December	744	31	112,485	48,102	34,041	
Total			**1,324,419**	**566,363**	**400,811**	**2,291,593**

Savings

Houtzdale - Existing Motor Energy Use

	HP	Number	Total HP	KW / HP	VFD	Total KW	% Max Load	Baseline Eff.	KW	Hours Operating	kWh	Demand Total (kW)	Annual Total (kWh)	Average Hourly Load (kWh)
Feedwater Pump	25	1	25	0.746		18.65	80%	75%	19.89	4380	87,133			
Feedwater Pump	25	1	25	0.746		18.65	80%	75%	19.89	4380	87,133			
Feedwater Pump	10	1	10	0.746		7.46	80%	75%	7.96	8760	69,706			
Pri HW Dist. Pump	7.5	1	7.5	0.746		5.595	80%	75%	5.97	4380	26,140			
Pri HW Dist. Pump	7.5	1	7.5	0.746		5.595	80%	75%	5.97	4380	26,140			
Pri HW Dist. Pump	7.5	0	0	0.746		0	80%	75%	0.00	0	-			
Sec HW Dist. Pump (3 & 4)	7.5	1	7.5	0.746	yes	5.595	80%	75%	5.97	4380	26,140			
Sec HW Dist. Pump (3 & 4)	7.5	1	7.5	0.746	yes	5.595	80%	75%	5.97	4380	26,140	294	1,324,419	151
Sec HW Dist. Pump (1 & 2)	150	1	150	0.746	yes	111.9	40%	75%	59.68	4380	261,398			
Sec HW Dist. Pump (1 & 2)	150	1	150	0.746	yes	111.9	40%	75%	59.68	4380	261,398			
Ter HW Dist Pump	125	1	125	0.746	yes	93.25	40%	75%	49.73	4380	217,832			
Ter HW Dist Pump	125	1	125	0.746	yes	93.25	40%	75%	49.73	4380	217,832			
Condensate Return	5	1	5	0.746		3.73	80%	75%	3.98	4380	17,427			
Condensate Return	5	0	0	0.746		0	80%	75%	0.00	0	-			
FD Fan	20	1	20	0.746		14.92	80%	75%	15.91	1095	17,427			
FD Fan	20	1	20	0.746		14.92	80%	75%	15.91	1095	17,427			
ID Fan	60	1	60	0.746		44.76	80%	75%	47.74	1095	52,280			
ID Fan	60	1	60	0.746		44.76	80%	75%	47.74	1095	52,280			
CB Boiler Burner	75	1	75	0.746		55.95	80%	75%	59.68	3650	217,832	279	566,363	65
KWN Boiler Burner	75	1	75	0.746		55.95	80%	75%	59.68	2920	174,266			
Coal Blower	20	1	20	0.746		14.92	80%	75%	15.91	1095	17,427			
Coal Blower	20	1	20	0.746		14.92	80%	75%	15.91	1095	17,427			
Coal Micronizer	150	1	150	0.746		111.9	80%	75%	119.36	1095	130,699	239	261,398	30
Coal Micronizer	150	1	150	0.746		111.9	80%	75%	119.36	1095	130,699			
Pneumatic Air Comp.	40	1	40	0.746		29.84	80%	75%	31.83	4380	139,412	32	139,412	16
									843.48		2,291,593		**2,291,593**	
								Demand for 12 months	10,121.73					

Electric Model

Month	Hrs/Month	Days per Month	Pumps kWh	Fans kWh	Micronizer & Comp kWh	
January	744	31	112,485	48,102	34,041	
February	672	28	101,599	43,447	30,747	
March	744	31	112,485	48,102	34,041	
April	720	30	108,856	46,550	32,943	
May	744	31	112,485	48,102	34,041	
June	720	30	108,856	46,550	32,943	
July	744	31	112,485	48,102	34,041	
August	744	31	112,485	48,102	34,041	
September	720	30	108,856	46,550	32,943	
October	744	31	112,485	48,102	34,041	
November	720	30	108,856	46,550	32,943	
December	744	31	112,485	48,102	34,041	
Total			**1,324,419**	**566,363**	**400,811**	**2,291,593**
						$0.07
						$160,411

Savings

ECM 3b (Rev 3A) - Convert CB to HW and New Steam Plant Inside Fence for Kitchen and Laundry

Date	Boiler Input (mmbtu)	HW Boiler Input (mmBtu)	Steam Boiler Input (mmBtu)	Steam Boiler Ouput (mmBtu)	DA Usage (mmBtu)	UG Pipe Losses (mmBtu)	Kitchen & Laundry Steam (mmBtu)	Plant HW HX (mmBtu)	HW HX Losses (mmBtu)	CB HW Boiler Output (mmBtu)	UG Pipe Losses (HW) (mmbtu)	Delivered to Bldg (mmbtu)	DHW (mmBtu)	Bldg HW HX Losses (mmBtu)	Space Heating Load (mmBtu)
January	6,962	5,239	1,722	1,412	80	-	1,332			4,296	234	**4,062**	889	58	3,115
February	7,914	6,469	1,445	1,185	67	-	1,118			5,304	229	**5,075**	803	52	4,220
March	8,105	6,468	1,637	1,343	76	-	1,267			5,304	234	**5,070**	889	58	4,123
April	5,097	3,332	1,765	1,447	82	-	1,366			2,732	233	**2,500**	860	56	1,583
May	4,789	2,935	1,854	1,521	86	-	1,435			2,406	234	**2,172**	889	58	1,225
June	4,130	2,284	1,846	1,514	86	-	1,428			1,873	233	**1,640**	860	56	724
July	4,055	2,129	1,926	1,579	89	-	1,490			1,746	234	**1,511**	889	58	564
August	4,108	2,233	1,875	1,537	87	-	1,450			1,831	234	**1,597**	889	58	650
September	4,045	2,201	1,845	1,513	86	-	1,427			1,805	233	**1,572**	860	56	655
October	4,607	2,742	1,864	1,529	87	-	1,442			2,249	234	**2,015**	889	58	1,068
November	6,495	4,834	1,661	1,362	77	-	1,285			3,964	233	**3,731**	860	56	2,815
December	7,950	6,304	1,646	1,350	76	-	1,273			5,169	234	**4,935**	889	58	3,988
Totals	**68,257**	**47,170**	**21,087**	**17,291**	**979**	**-**	**16,312**			**38,680**	**2800**	**35,880**	**10,469**	**681**	**24,730**
													-		

HW Boiler Combustion Eff. 82%
Steam Boiler Comb Eff. 82%

System Eff.
Fuel Savings

Assumptions
1) Convert central plant CB boiler to HW
2) Operate new steam boiler(s) inside fence for Kitchen and Laundry
3) Operate new HW boilers in central plant, no reduction in loop temperature (180°F).
4) Assumes coal equipment electric savings were captured with the CNG ECM model.
5) Assumes $600K for installation of new 700HP HW boiler in central plant.

SCI Houtzdale

Pipe and Fitting Insulation Savings

Energy Survey - Heat Loss Analysis

Survey Date:
Operating Hours per Year: 5,110 4,299
Insulation Thickness: 1"
Wind Speed: 0 MPH
Amb. Temp: 80
Design: LT450SS
1.00

Qty. Piece # or Length of Pipe	Size	Description	Surface Temp.	Area (Ea.) (Sq.ft.)	Bare Heat Loss (Btu/Hr/SF)	Insulated Heat Loss (Btu/Hr/SF)	Bare Heat Loss (Btu/Hr)	Insulated Heat Loss (Btu/Hr)	Bare Heat Loss MMBtu/Yr	Insulated Heat Loss MMBtu/Yr	Total Energy Savings MMBtu/Yr
1	3"	90 Degree Elbow	200	0.60	384.00	28.86	230.40	17.31	0.99	0.07	0.92
4	3"	Butterfly Valve	200	4.10	384.00	28.86	6,297.60	473.23	27.07	2.03	25.04
2	3"	Control Valve	200	4.10	384.00	28.86	3,148.80	236.62	13.54	1.02	12.52
1	3"	Flange	200	1.80	384.00	28.86	691.20	51.94	2.97	0.22	2.75
2	3"	Flange	200	1.80	384.00	28.86	1,382.40	103.88	5.94	0.45	5.50
4	3"	Pipe	200	1.00	384.00	28.86	1,536.00	115.42	6.60	0.50	6.11
2	3"	Suction Diffuser	200	4.40	384.00	28.86	3,379.20	253.93	14.53	1.09	13.44
1	3"	Intersection T	200	1.20	384.00	28.86	460.80	34.63	1.98	0.15	1.83
1	6"	90 Degree Elbow	200	1.80	384.00	28.86	691.20	51.94	2.97	0.22	2.75
1	6"	Gate Valve (Bonnet)	200	1.80	384.00	28.86	691.20	51.94	2.97	0.22	2.75
1	6"	Flange	200	1.80	384.00	28.86	691.20	51.94	2.97	0.22	2.75
1	6"	Flange	200	1.80	384.00	28.86	691.20	51.94	2.97	0.22	2.75
2	6"	Flange	200	1.80	384.00	28.86	1,382.40	103.88	5.94	0.45	5.50
1	6"	Flange	200	2.80	384.00	28.86	1,075.20	80.80	4.62	0.35	4.27
1	6"	Flange	200	3.80	384.00	28.86	1,459.20	109.65	6.27	0.47	5.80
4	6"	Flange	200	1.80	384.00	28.86	2,764.80	207.76	11.89	0.89	10.99
1	6"	Gate Valve	200	4.10	384.00	28.86	1,574.40	118.31	6.77	0.51	6.26
1	6"	Gate Valve	200	4.10	384.00	28.86	1,574.40	118.31	6.77	0.51	6.26
1	6"	Pipe	200	1.00	384.00	28.86	384.00	28.86	1.65	0.12	1.53
3	6"	Pipe	200	1.00	384.00	28.86	1,152.00	86.57	4.95	0.37	4.58
12	6"	Pipe	200	1.00	384.00	28.86	4,608.00	346.27	19.81	1.49	18.32
1	6"	Strainer	200	5.00	384.00	28.86	1,920.00	144.28	8.25	0.62	7.63
1	8"	Gate Valve (Bonnet)	200	1.80	384.00	28.86	691.20	51.94	2.97	0.22	2.75
1	8"	End Cap Flange	200	1.50	384.00	28.86	576.00	43.28	2.48	0.19	2.29
1	8"	Flange	200	1.80	384.00	28.86	691.20	51.94	2.97	0.22	2.75
2	8"	Flange	200	1.80	384.00	28.86	1,382.40	103.88	5.94	0.45	5.50
1	8"	Gate Valve (Bonnet)	200	4.10	384.00	28.86	1,574.40	118.31	6.77	0.51	6.26
8	8"	Pipe	200	1.00	384.00	28.86	3,072.00	230.84	13.21	0.99	12.21
											181.99
3	8"	Gate Valve	180	3.00	320.00	24.05	2,880.00	216.42	14.72	1.11	13.61
2	8"	Flange (Blind)	180	5.00	320.00	24.05	3,200.00	240.46	16.35	1.23	15.12
3	8"	Gate Valve	180	5.00	320.00	24.05	4,800.00	360.69	24.53	1.84	22.68
3	8"	Blank Flange	180	4.00	320.00	24.05	3,840.00	288.55	19.62	1.47	18.15
6	8"	Gate Valve (Bonnet)	180	1.00	320.00	24.05	1,920.00	144.28	9.81	0.74	9.07
3	8"	Gate Valve (Bonnet)	180	4.40	320.00	24.05	4,224.00	317.41	21.58	1.62	19.96
3	8"	Strainer	180	4.40	320.00	24.05	4,224.00	317.41	21.58	1.62	19.96
4	10"	Gate Valve	180	4.10	320.00	24.05	5,248.00	394.36	26.82	2.02	24.80
2	10"	(Thrd.) Str./24" IPS	180	1.80	320.00	24.05	1,152.00	86.57	5.89	0.44	5.44
											148.81
91							77,260.80	5,805.72	358	27	330.8

SCI Houtzdale Steam Trap Saving												
Survey Data				Date:			Steam Trap Data			Loss Level		
Area	Trap	Trap Type	Model	Manufacturer	Test Result	Location	Size	Pressure	Temp	Leak Level	Lb/Hr	Mlb/YR
	1	FLOAT	3/4-FT15	SPIRAX SARCO	LEAK/M		0.8	15	206	8	15.04	76.21
	2	BUCKET	881-125	ARMSTRONG	LEAK/L		0.8	90	251	14	24.80	125.65
	3	FLOAT	15-B3	ARMSTRONG	LEAK/M		0.8	15	192	7	14.70	74.47
	4	BUCKET	881-250	ARMSTRONG	BLOWING		0.8	75	266	15	33.47	169.55
	5	BUCKET	811- 15	ARMSTRONG	BLOWING		0.8	80	239	15	40.96	207.51
								TOTAL LOSS LB/HR			129.0	653

Note: The above savings were calcutated using the testing methods gecommendedfor this measure. Actual testing will be performed in the IGA

Equipment Specifications Sheets

ECM #3 Central Heating Plant Upgrades

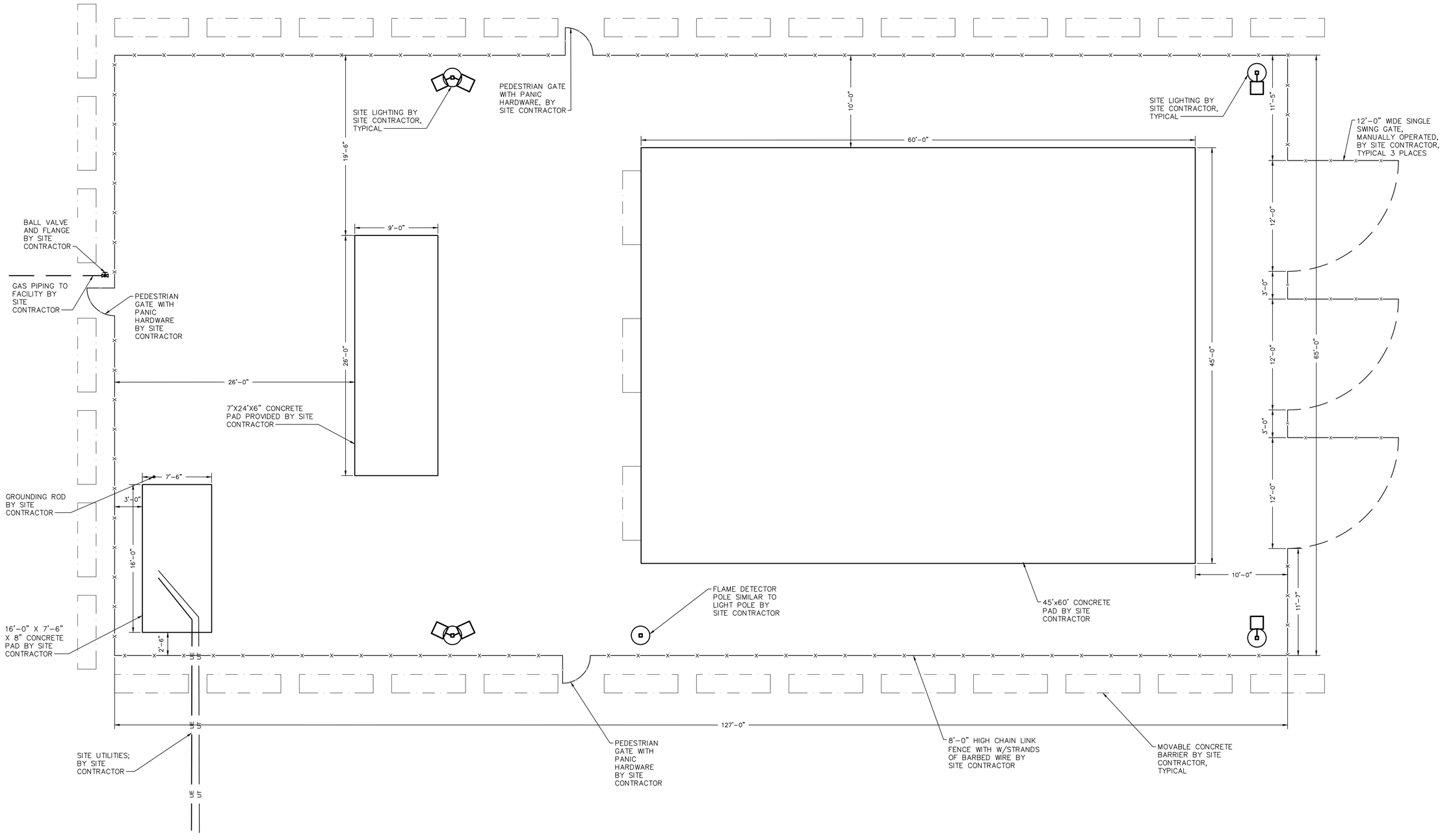

NOTES:

1. SITE CONTRACTOR TO PROVIDE SITE LIGHTING, FENCING, EQUIPMENT PADS, AND TRAILER PARKING SITEWORK.

PROPOSED SITE WORK BY SITE CONTRACTOR

SCALE: 3/16" = 1'-0"

NO.	DATE	REVISION

FOR RETTEW ASSOCIATES BY:

MANAGER: PAT WALKO
DESIGN BY: CMO
CHKD BY: P WALKO
DRAWN BY:
CHKD BY:
SURV. CHIEF: N/A
FIELDBOOK NO. N/A

CLIENT
COMPASS NATURAL GAS PARTNERS, LP
1215 MANOR DRIVE, SUITE 302
MECHANICSBURG, PA 17055

COMPASS NATURAL GAS

SCALE 3/16"=1'-0" (0, 3', 6', 12', 18')

RETTEW
RETTEW Associates, Inc.
3020 Columbia Ave. Mechanicsburg, PA 17055
Phone (717) 697-3551 Fax (717) 697-8953
Email: rettew@rettew.com
Website: www.rettew.com
Engineers • Planners • Surveyors • Landscape Architects
Environmental Consultants

COMPASS NATURAL GAS
FOR
SCI HOUTZDALE
SITE PLAN – BY SITE CONTRACTOR

PROJ. NO. 100052036

DWG. NO. C-03

NOT FOR CONSTRUCTION/NOT FOR BIDDING

CNG Typical Piping Requirements

Prepared by

Xpress Natural Gas LLC
160 State Street, Eighth Floor
Boston, MA 02109
(857) 233-5329

We strongly recommend all customers stipulate High Density Polyethylene Pipe (HDPE) and not Medium Density Polyethylene Pipe for lower maintenance, higher safety, and better protection from possible pressure fluctuations if and when the facility is eventually connected to an alternative gas source such as a pipeline.

Direct burial of 3" HDPE with minimum 3 - 2" electrical conduits, to include:

- 1’ of sand and will replace any gravel lost in excavation for parking lot base & paving (will match existing thickness of pavement up to 4 inches). 4" HDPE will be tested to 100 PSI.
- Locate wire & caution tape will be installed with the installation of the gas service for proper locating (caution tape for electrical and gas).
- All piping to support connection from the site to the service interconnection at the plant (boiler room or other point per plant management).
- Piping to terminate at the CNG delivery site at a 4” metal flange (6-bolt pattern) raised 2’ above concrete pad.

Natural gas piping must be fabricated and tested in accordance with all federal, state and local regulations for gas installers. We strongly recommend that all installations be required to use NEGA licensed foreman and operators to ensure code compliance.

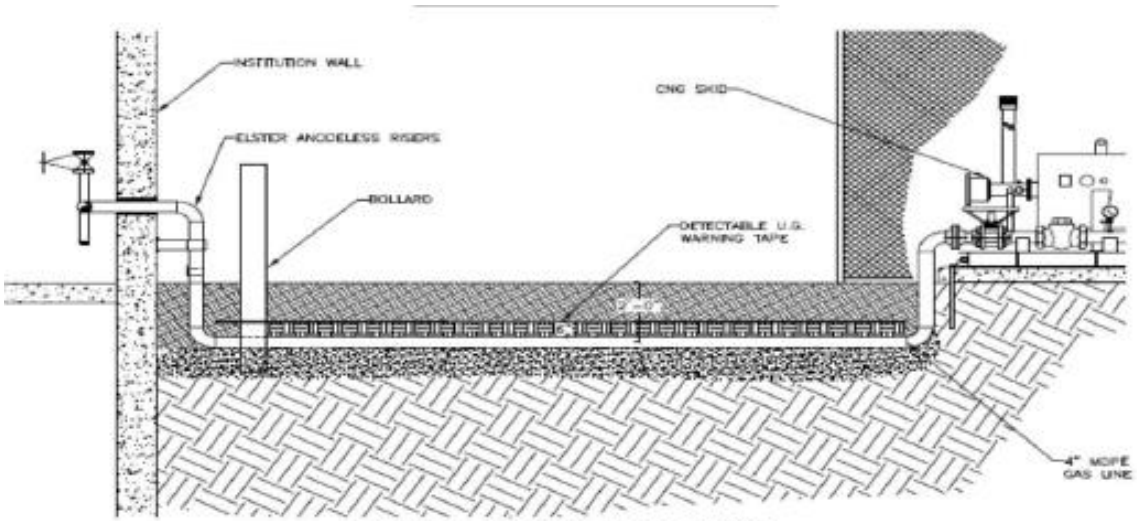

TYPICAL BURIED PIPE DETAIL

SPRAYMASTER
SPRAYMASTER COMBO

Deaerators

Boiler Book
04/2018

The Cleaver-Brooks designed deaerator assures high purity effluent by removing oxygen and other dissolved gases in boiler feed. Thus, it is the answer to long- lasting boiler equipment for industrial and commercial boiler users. Built of corrosion-resistant alloys for lifetime service, the deaerator employs those basic principles of gas removal proven most effective and economical to every boiler owner. Contact your local Cleaver-Brooks authorized representative for component sizing information.

FEATURES AND BENEFITS

Low Profile desgn:
- Low head allows installation in space restricted areas.

Two-Stage Deaeration in a Common Vessel:
- Recycle pumps are not required.
- Packaged for easy maintenance.

ASME Code Design (Section VIII):
- Assures deaerator vessel quality in materials and fabrication to meet safety requirements.

Internal Stainless Steel Vent Condenser:
- Protects deaerator vessel against corrosive gases while providing a means for removal of corrosive gases from boiler feedwater.

Self-Cleaning Water Spray Valve:
- Maintains deposit-free surface.
- Reduces maintenance requirements.

Internal Automatic-Check Valve Prevents Steam Back-Flow:
- The water spray valve is normally closed at no flow.
- Prevents steam back flow through the water spray valve at no flow conditions.

Removable Water Spray Inlet Assembly:
- Flanged assembly allows easy access for maintenance and/or inspections.

Stainless Steel Deaeration Assembly:
- Ensures a longer life of wetted materials in intimate contact with corrosive liquids and released corrosive gases.

Pressurized Tank Reduces Flashing and Minimal Venting:
- Recovery of exhaust and turbine steam.
- Saves BTU that would normally be exhausted to atmosphere.
- Improves plant efficiency.

Auto Vent Valve Eliminates Gases at Start-Up:
- Atmospheric contamination virtually eliminated for incoming water.

O2 levels to 0.005 cc/l; CO2 levels near zero:

- Cleaver-Brooks deaerator is guaranteed to remove oxygen concentrations to 0.005 cc/liter while operating between 5 and 100% capacity.

Carbon dioxide concentration is practically reduced to zero.

Capacity Not Affected by Mixed Inlet Temperature:

- Consistent performance under variable conditions.

Integral Level Control

- Automatically introduces cold water make-up to supplement condensate only when necessary to meet boiler demand:
- Saves BTU by accepting condensate before cold make-up water. Maintains a minimal water level within the deaerator vessel to prevent damage to the boiler feed pumps, and to maintain system operation.

Variety of Tank Sizes to Handle Volume-Swings in Condensate Return:

- Provides flexibility for selecting a tank for specific applications to limit the loss of hot condensate to drain.

Packaged Units for Cost Effective Installation:

- Complete packages are prefabricated in the Cleaver- Brooks manufacturing facility to ensure piping alignment and control wiring function. The unit is partially disassembled, match marked for efficient field re-assembly.

Internal Pump Suction Vortex Breakers:

- Eliminates the problems of loss in NPSHA and cavitation associated with the creation of vortices within pump suction piping.

PRODUCT OFFERING

Spraymaster Deaerators are designated by spray head and tank size. Example:

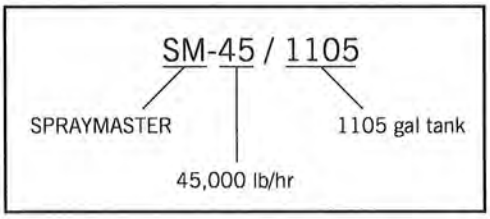

The table below lists storage capacity for standard tank sizes.

Minutes of storage from the overflow level to the bottom of the tank at rated capacity
Industry standard sizing is for 10 minutes of storage

Model number		SM-7	SM-15	SM-30	SM-45	SM-70	SM-100	SM-140	SM-200	SM-280
Spray capacity (LBS/HOUR)		7000	15,000	30,000	45,000	70,000	100,000	140,000	200,000	280,000
Spray Capacity (GPM)		14	30	60	90	140	200	280	400	560
Total Boiler HP		203	435	870	1304	2029	2899	4058	5797	8116
Tank size	260	18.6	8.7							
	300	21.4	10.0	5.0						
	415		13.8	6.9						
	610		20.3	10.2	6.8					
	840			14.0	9.3	6.0				
	1105			18.4	12.3	7.9	5.5			
	1400				15.6	10.0	7.0	5.0		
	2200					15.7	11.0	7.9		
	2485					17.8	12.4	8.9		
	3200						16.0	11.4	8.0	5.7
	4500						22.5	16.1	11.3	8.0
	6200							22.1	15.5	11.1

The Spraymaster Deaerator is a pressurized low-headroom system designed to remove dissolved oxygen in boiler feedwater to 0.005 cc per liter, or less, and eliminate carbon dioxide. A typical deaerator package includes the deaerator tank mounted on a stand of appropriate height along with all operating controls, feed pumps assembled and piped (typically knocked down for shipment and field assembly). The tank conforms to section VIII of the ASME code.

The main deaerating portion is located internally and consists of a water collector and steam atomizing valve. Built into a flange on top of the tank is a spring loaded water spray nozzle which includes an automatic and manual vent valve.

Packaged Spraymaster systems offer substantial advantages through lower-cost installation and simplified operation and maintenance. Spraymaster Deaerators arrive on site ready for hookup to your water, steam, and electric power connections.

The deaerator stand comes with feed pump/motor set mounted on a solid base. The base is specially reinforced to prevent vibration wear on vital system components. Rugged square structural tubing combines lasting strength with generous working space for inspection or routine servicing.

Control Panel

The control panel, complete with starters, fuse protection, switches, lights and pre- wired terminal blocks is mounted on the stand assembly. Wiring to feed pump motor and all controls is standard.

Deaerator Tank

ASME construction - certified to 50 psig. All tanks provided with manhole, individual pump suction tappings and other openings as required. Saddles or legs standard on all sizes. Select from sizes for 5 to 30 minutes of storage to overflow.

Piping

Pump and motor sets are mounted on individual bases before mounting on stand base. Individual suction piping (including strainer, shutoff valve, flexible connector) are provided for all feed pumps.

Standard Equipment

- Spraymaster deaerator.
- Deaerator storage tank.
- Deaerator water inlet atomizing valve.
- Deaerator steam inlet atomizing valve.
- Gauge glass.
- Steam pressure gauge.
- Feedwater thermometer.
- Required tappings.

Optional Equipment

- Steam pressure reducing valve
- Three valve bypass and strainer (MUV)
- Steam relief valves
- High water alarm
- Low water alarm
- Low water pump cut off
- High-temperature condensate diffuser tube (over 227 °F)
- Boiler feed pump and motor sets
- Recirculation orifice or relief valve
- Suction shutoff valve
- Suction strainer
- Discharge check valve
- Discharge shutoff valve
- Discharge pressure gauge
- Discharge manifold
- Overflow drainer
- Control panel
- Chemical feed quill
- Vacuum breaker
- Insulation and lagging
- Sentinel relief valve
- Tank drain valve
- Back pressure relief valve
- Magnesium anode
- Stand
- Seismic construction

Packaging

- Fully packaged, factory piped and wired.
- Half packaged, suitable for field erection with interconnecting piping and wiring by others

COMBO UNITS

The Spraymaster Combo combines a Spraymaster deaerator and a surge tank in a single vessel. Deaerator options and storage capacity are as listed above.

In addition to providing all the benefits of an independent deaerator and surge, the SM Combo offers the following features:

Double Inner Head Separates the Deaerator Pressure Vessel From Surge Tank:

Ensures the deaerator and surge tank are two separate vessels while structurally attached for space considerations. This also limits heat transfer from the deaerator pressure vessel to the surge atmospheric vessel, preventing energy loss due to surge tank water boiling.

Vented and Insulated Gap Between the Deaerator and Surge Tank:

Insulation is placed between the double inner head to further limit heat transfer from the deaerator pressure vessel to the surge atmospheric vessel. A vent is placed between the double inner head to allow moisture evaporation eliminating corrosion potential.

Low Profile Design:

Low head room allows for installation in space restricted areas.

Two-Stage Deaeration in a Common Vessel:

- Recycle pumps are not required.
- Packaged for easy maintenance.

Packaged Units for Cost Effective Installation:

Complete packages are pre-fabricated in the Cleaver-Brooks manufacturing facility to ensure piping alignment and control wiring function. The unit is disassembled and match marked for efficient field re-assembly.

Spraymaster Combo Models

Available Models	DA Tank Gallons	Surge Tank Gallons
SD-(7-45)-260-260	260	260
SD-(7-45)-300-300	300	300
SD-(7-140)-415-450	415	450
SD-(7-140)-610-600	610	600
SD-(7-140)-840-900	840	900
SD-(7-140)-1105-1200	1105	1200
SD-(7-140)-1400-1800	1400	1800
SD-(7-280)-2200-2200	2200	2200
SD-(7-280)-2485-2500	2485	2500

RETURN ON INVESTMENT

The advantages of a pressurized deaerator over an atmospheric boiler feed system can be readily seen in the following areas:

- Flash steam
- Exhaust steam
- Blowdown
- Makeup water
- Chemical treatment
- Intangibles

Flash Steam
A percentage of the high-pressure condensate returns will flash to steam and be lost in an atmospheric vessel application. This flash steam loss equates to lost energy and higher fuel costs.

Exhaust Steam
Exhaust steam cannot be recovered in an atmospheric vessel application. An example would be steam turbine exhaust.

Surface Blowdown
Flash and exhaust steam losses require increased makeup water. This increase in makeup water in turn requires an increase of surface blowdown, again resulting in lost energy and associated higher fuel costs. The additional surface blowdown may also result in an increase in capital expenditure for a larger blowdown heat recovery system.

Makeup Water
The additional makeup water necessitated by flash steam, exhaust steam, and surface blowdown losses itself has an associated cost. This can include increased utility/sewer charges as well as pretreatment equipment costs.

Chemical Treatment
Dissolved oxygen content in an atmospheric boiler feedwater system is a function of water temperature. Lowering the dissolved oxygen content below what is naturally present, based on mixed water temperature at atmospheric pressure, requires the addition of a chemical treatment program. The most common oxygen scavenger used is sodium sulfite. Sodium sulfite reacts with dissolved oxygen as follows:

Theoretically, it takes approximately 8 ppm of sodium sulfite as Na2SO3 to scavenge 1 ppm of dissolved O2:

$$2Na2SO3 + O2 \rightarrow 2Na2SO4$$

Intangibles
Some cost savings are difficult to calculate - in general, best practices in deaeration will prolong the life of boiler room equipment, reducing repair and maintenance costs.

CleaverBrooks®

Steam Boiler Budget Proposal

SCI Houtzdale

To: Mark Ray
Entech Engineering
201 Penn Street
Reading, PA 19603

By: Randy Rohl
Delval Equipment Corporation
604 General Washington Ave
West Norriton PA 19403 United States
(610)275-3599
randy@delval.com

System Requirements

Proposal Number: 00251749 / Proposal Date: 10/16/18
Job Name: SCI Houtzdale / Project Name: SCI Houtzdale

First System Requirements: Firetube Boiler	
Application:	High Pressure Steam
Fuel Series:	200 - Nat. Gas / No. 2 Oil
Boiler Capacity:	250 HP Input
Design Pressure:	150# Steam
Operating Pressure:	100 psig
Safety Valve Setpoint:	125 lb
NOx Emissions Level:	30 ppm NG
Available Site Voltage:	460/3/60
Available Site Gas Pressure:	2 psig
Approximate Site Altitude:	700 ft. ASL
Insurance Requirements:	GE-GAP (CSD-1), FM (Submittal Included)
Proposed System Solution:	CBEX Elite-200-250-150ST (460/3/60) ---30 ppm-HAWK-STD/CFG (Qty: 2)

Second System Requirements: Packaged Water System	
Application:	Feedwater Tank
Required Feedwater Components:	Tank, Controls (Trim), Stand, Pump
Feedwater Tank Type:	Deaerator
Feedwater Tank Design Pressure:	50 lb
Feedwater Tank Storage Time:	10 Minutes
Number of Boiler Sets:	1
Tank Sizing Criteria:	Total Boiler Horsepower
Main Power Voltage:	460/3/60
Boiler Set #1:	Boiler Quantity: 2
	Boiler Capacity (Each): 250 HP Input
	Operating Pressure: 100 psig
	Total Pumpset System Operating Pressure: 115 psig
	Safety Valve Setpoint: 125 lb
	Feedwater Pumpset System: (2) - 1 Pump w/ 1 Pump Backup, Continuous Operation, TEFC Motor Type
Feedwater Tank Water:	Primary Source: Condensate
	Primary Source Pressure: 40 psig
	Secondary Source: MakeUp
	Secondary Source Pressure: 40 psig
	Low Temperature Condensate Return Flow Rate: 50%
	Low Temperature Condensate Return Temperature: 175°F
	High Temperature Condensate Return Flow Rate: 0%
	High Temperature Condensate Return Temperature: 233°F
	Makeup Water Flow Rate: 50%
	Makeup Water Temperature: 45°F
Proposed System Solution:	FW(IND)SM-30-415-ADAC-1000(460/3/60)-PS1-(1P-1BU)-CR5-13K-C-5HP-T/STD/CFG (Qty: 1)

Model CBEX Elite (100–1,200 HP Firetube)

PRODUCT CAPABILITIES	
BOILER TYPE:	FIRETUBE BOILER
BOILER APPLICATIONS:	STEAM, HOT WATER
BURNER FUEL TYPES*:	NATURAL GAS, PROPANE, DIGESTER GAS, TOWN GAS, #2 OIL, DUAL FUELS
BOILER CAPACITIES*:	100–1,200 HP
DESIGN PRESSURES*:	150, 200, 250, 300 PSIG (STEAM) 30, 125, 150, 200, 250 PSIG (HOT WATER)
NOX EMISSIONS*:	5, 7, 9, 30, 60 PPM

*Some combinations of burner fuel types, boiler capacities, design pressures, and NOx emissions may not be available.

Model CBEX Elite (100–1,200 HP Firetube)

Packaged Boiler & Burner System

- Completely integrated boiler, burner, and control systems offer high efficiency, flexibility, reliability, safety, and ease of maintenance.
- Single-source boiler and burner manufacturer providing excellent service and support for all products, components, and accessories throughout the lifetime of the system.

Two-Pass Wetback Boiler Design

- Cleaver-Brooks exclusive EX technology.
  - Extended surface tubes maintaining turbulent flow increases heat transfer by 85%.
  - Reduced heat transfer rate increases the lifespan of the furnace.
  - Tubes and furnace of the same length reduces pressure vessel thermal stresses.
  - Superior combustion performance for industry-leading NOx and CO reduction.
- Standard 15-year pressure vessel warranty (contact Cleaver-Brooks for more details).
- Stated efficiency (stack loss method) guaranteed with a $10,000-per-full-point rebate.

Integral Head Burner Design

- 10:1 maximum high-to-low fire turndown for select boiler capacities and NOx emissions.
- 5 ppm natural gas NOx emissions available without selective catalytic reduction (SCR).
- Quiet operation, intercooled boiler head, ease of access to burner or pressure vessel, no external flue gas recirculation (FGR) ducting, and exceptional burner life.

HAWK – Integrated Boiler Combustion Control System (Included)

- Individual actuator control of burner fuel and combustion air for fuel-to-air ratio control.
- Integrated burner management system (BMS) with combustion control system (CCS).
- System configuration, combustion settings, process monitoring, alarm management, and history displayed on a colored graphical human-machine interface (HMI).

Level Master – Water Level Control System (Optional, Steam Only)

- Non-contact and non-wearing stainless steel float using magnetostrictive technology.
- Microprocessor-based electronic controller including an alphanumeric LCD display, alarms, continuous float monitoring, blowdown reminders, and blowdown history.
- Constructed in accordance with the ASME BPVC and bears the UL Listing Mark.

Model SM (SprayMaster Deaerator)

PRODUCT CAPABILITIES	
DEAERATOR TYPE:	SPRAY VALVE DEAERATOR
BOILER APPLICATIONS:	STEAM
DEAERATOR RATING:	7,000-280,000 LBS/H
DESIGN PRESSURE:	50 PSIG
OPERATING PRESSURE:	5 PSIG

Model SM (SprayMaster Deaerator)

Packaged Deaerator System

- Single-source boiler and burner manufacturer providing excellent service and support for all products, components, and accessories throughout the lifetime of the system.
- Designed, constructed, and hydrostatically tested in accordance with the ASME BPVC.

Spray Valve Design

- Deaerates oxygen to 0.005 cc/L while operating between 5% and 100% capacity.
- Deaerates carbon dioxide to practically zero while operating at all capacities.

Stainless Steel Deaeration Assembly

- Completely deposit-free surfaces reduce maintenance costs and requirements.
- Increases lifespan of wetted material in contact with corrosive liquids and gasses.

Pressurized Single Tank

- Reduces amount of steam flashing and minimizes energy-wasting steam venting.
- Recycle pumps not required from a two-stage deaeration in a common vessel.

Stainless Steel Vent Condenser and Thermostatic Steam Trap

- Prevents steam backflow through inlet water spray valve at no-flow conditions.

Internal Pump Suction Vortex Breakers

- Reduces NPSHA losses and cavitation created by vortices within pump suction piping.

ADAC – Advanced Deaerator Control (Optional)

- Controls feedwater pumps, transfer pumps, deaerator and surge tank makeup water, pump lead/lag and alternating control, chemical feed, high and low water alarms, expanded alarm annunciation, and a colored graphical human-machine interface (HMI).
- Variable frequency drive (VSD) pump control increases energy efficiency.
- Optional Ethernet remote monitoring and building automation system communication.

Product Model: CBEX Elite-200-250-150ST (460/3/60) ---30 ppm-HAWK-STD/CFG		
Item	**Qty.**	**Description**
#1	2	**Cleaver-Brooks Model: CBEX Elite-200-250-150ST(460/3/60)** 8625 lbs/hr output (from and at 212F). Operating Pressure:100 psig. Fuel Series: 200 - Nat. Gas / No. 2 Oil First Gas Fuel: Natural Gas (Specific Gravity=0.6);Gas Train Type: Siemens Gas Train Site Pressure: 2 psig Gas Train Size: 2" Job Site Altitude: 700ft 15hp Blower Motor Insurance Requirements:GE-GAP (CSD-1), FM (Submittal Included) Standard Main LWCO: LevelMaster-Modulating / Proportional Type Configuration Check:Standard Selections User Description Info.:
	2	Pricing valid for 30 days. Expiration: 11/15/2018.
	2	The CBEX Elite Boiler includes an UL Label unless Voided by an option selection. The CBEX Elite Boiler Package DOES NOT include an Economizer. The Economizer must be Configured separately.
	1	Firetube Manuals (6): (CBEX Elite_100-1200HP////Variable Speed Drive - Hawk ICS/LevelMaster 11////Hawk ICS & O2 Trim/CB780E/784E Burner Control & Operating Info//Hawk 4000)
	2	Fuel Series: 200 - Nat. Gas / No. 2 Oil
	2	Horsepower - 250 HP
	2	Pilot Type: Gas
	2	Emission Level: 30 ppm NG
	2	**O2 Requirements: Constant 3% O2 at 10:1 TD**
	2	Optional Safety Valve(s): 125 lb. ST
	2	Steam Nozzle - Size: 6"Flanged 300lb. R.F.
	2	Feedwater Connection:2 inch/NPT
	2	Surge Load Baffle - 250HP
	4	Quick Blowdown Valve: Sliding Disk, 1-1/2" NPT, 200lb.
	2	Slow Blowdown Valve: Y, 1-1/2", NPT, 200lb., Single Seat
	2	Steam Header Valve: 3in. Cast Steel, 300lb Flanged
	2	Feedwater Globe Valve: 2 NPT Steel Valve (Design Pressure - 150ST)
	2	Feedwater Check Valve: 2 NPT Steel Valve (Design Pressure - 150ST)
	2	Factory Feedwater Piping: 2" Globe, Check, 3-Valve Bypass Piping
	2	Strainer (250lb): 2"
	2	Non-Return Valve: 3in. - Iron 250lb Angle 2:1
	2	Steam Header Spool Piece (for NR Valve): 6x3x36
	2	Free Blow Drain Valve, 3/4 inch Gate Type, 300 psi Bronze - Mount to Non-Return Valve
	2	Hydrostatic Test and Certification of Boiler External Piping
	2	Standard Aux LWCO - Warrick 3C2
	2	FW Control System: Worcester Modulating Linkage Controlled Model 4446PMSE ;4-20 mA; Valve Size: 1/2 in.; FW Temp: 227 F; Pressure Drop: 15 psi; Op. Press: 100psi; Valve Flow: 20.3gpm; Cv Value: 8; Max. Close Off: 250 psi
	2	Surface Blowdown Stop Valve: Mounted and Piped (300 psi) Included with Metering Valve, Sample Cooler, and/or Surface Blowdown System.
	2	Surface Blow Off Metering Valve (600 psi Steel Velan Flow Control Valve): 1/2" Fig. S03-2014, 125-250HP (Mounted)
	2	Hawk Package: 4000
	2	Steam Pressure Transmitter
	2	Water Temperature Transmitter
	2	Boiler HAWK Touchscreen Upgade: 10" Color Screen (US Standard Units)
	2	Stack Temperature Transmitter
	1	HAWK (Includes Header Pressure/Temperature Transmitter)

	1	Remote Emergency Shutoff (115V) - Break Glass Type (Ship Loose): Terminals Only - Switch by Others
	2	Remote Emergency Shutoff Terminals
	2	Combustion Air Interlock: Option 3 - CB limit circuit Relay/Contact, control panel terms. Energized terms. allow boiler start.
	2	Standard Combustion Safeguard Control CB-780E, IR Scan (Honeywell)
	2	Parallel Positioning System: Integrated Parallel Pos
	2	Primary Fuel Actuator (Type: Quick Disconnect)
	2	Secondary Fuel Actuator (Type: Quick Disconnect)
	2	FGR Actuator (Type: Quick Disconnect)
	2	O2 Trim: CB Integrated - Air Trim
	2	Combustion Air Temperature Probe
	2	HAWK Additional Analog Inputs: 8 Additional
	2	Hawk Expanded Annunciation (Discrete Input Module)
	1	BAS Interface: Protonode; Protocol: BACnet I/P for 2 Processors, 2 Boilers
	1	Protocol Translator RC Panel - Assembled (Shipped Loose)
	2	HAWK Boiler Panel Ethernet Hub: 5 Port
	1	Ethernet Hub: 5 Port (Standard) - RC Panel
	2	Blower Motor Starter: Variable Speed Drive NEMA 1 - 460/3/60 - 15HP
	2	VSD Enclosure Rating - NEMA 1 Free Air - No panel
	2	Natural Gas-2in.-Siemens Gas Train (Standard)
	2	Plugged Leakage Test Cock: 125-300 HP
	2	3 Phase Oil Pump In Lieu of Single Phase
	2	Mount, Pipe, and Wire Oil Pump Assembly on Boiler Baserail. (Oil Tank must be in close proximity to boiler)
	2	Premium Blower Motor - Std
	2	Main Power Disconnect Switch: NonFused - Mounted
	2	Alarm Device - 4 inch Bell and Silencing Switch - Std. w/ Hawk
	2	Control and Entrance Panel: Separate Contol and Entrance Panel (NEMA 1) Overall Rating of Finished Panel may Change Depending on Firetube Options selected.
	2	FM Insurance:250HP-Gas / #2 Oil
	2	CSD-1: 250HP-Gas / #2 Oil
	2	Start-up Allowance included in boiler base price:
	1	Submittals - Dimensional Diagram (Firetube)
	1	Submittals - Wiring Diagram (Firetube)
	1	Submittals - Test Fire Report (Firetube)
	1	Submittals - ASME Data Report (Firetube)

Product Model: FW(IND)SM-30-415-ADAC-1000(460/3/60)-PS1-(1P-1BU)-CR5-13K-C-5HP-T/STD/CFG		
Item	**Qty.**	**Description**
#2	1	**Cleaver-Brooks Model: FW(Individual)SM-30-415-ADAC-1000(460/3/60)-PS1-(1P-1BU)-CR5-13K-C-5HP-T/** System Information: Project Market: United States Application Environment: Indoor - Typical Boiler Room Project NEMA Rating: NEMA 1 Feedwater Components: Tank, Controls (Trim), Stand, Pump Boiler System Information: Number of Boiler Sets: 1 Feedwater / Transfer Tank Size Based on Total Boiler Horsepower System Voltage: 460/3/60 Customer Voltage: 480 Boiler Set 1: (2) 250 HP Boilers Operating at 100 psig with 125 Safety Valve Setting Feedwater Water Source Information: Feedwater Primary Water Source: Condensate at 40 psig Low Condensate Return Flow: 50 Percent at 175 F High Condensate Return Flow: 0 Percent at 233 F Feedwater Secondary Water Source: MakeUp at 40psig Make Up Flow Entered: 50 Percent at 45 F Feedwater Tank Information: Model: Spraymaster Tank Size: 415 Gallons (10 mins of Storage) Spray Size: 30 Pump Control Type: ADAC Controls Package: ADAC
	1	Pricing valid for 30 days. Expiration: 11/15/2018.
	1	Feedwater Tank Material - A36 Carbon Steel 415gal 50 lb ASME Stamp (Operating Pressure: 5 psi) (INFORMATIONAL ONLY)
	1	Feedwater Tank Construction - A36 Carbon Steel (INFORMATIONAL ONLY)
	1	Feedwater Tank Manway: 20in Manway (SA106)
	1	Feedwater Packaging: Full
	1	Feedwater Tank Insulation
	1	Feedwater Magnesium Anode: 18in
	1	Feedwater Chemical Feed Quill (316SS)
	1	2" Feedwater Overflow Drainer (Warren)
	1	Feedwater Tank Drain Valve: 2"
	1	Feedwater Vacuum Breaker: 1.5" NPT
	1	Feedwater Sample Tapping Valve
	1	PWS Tanks Pump Piping Stand
	1	Feedwater System 1 Suction Tapping: 2.5in 150lb Flange
	2	Feedwater System 1 Recirculation Tapping: 1in NPT
	2	Feedwater System 1 Pump Model: CR5-13K (TEFC) Pumpset Information: (2) - 1 Pump w/ 1 Pump Backup, Continuous Pump Info: Connection Size: 1.25in; Min Flow: 7.5; Flow: 27.3375; Design Head: 316.11 ft; Dead Head: 420.4 ft; Motor Size: 5HP; NPSHr: 3.72
	2	Feedwater System 1 Suction Piping: 1.5in Class: 125 Type: Carbon Steel
	2	Feedwater System 1 Suction Piping Pressure Gauge: Dry
	1	System 1 Feedwater Suction Manifold Includes Emergency Isolation Valve 2.5in Class: 150 Type: Carbon Steel
	2	Feedwater System 1 Discharge Piping: 1.25in Class: 300 Type: Carbon Steel
	2	Feedwater System 1 Discharge Piping Pressure Gauge: Dry
	1	Feedwater System 1 Discharge Manifold: 1.25in Class: 300 Type: Carbon Steel
	2	Feedwater System 1 Recirculation Piping: 1in Class: 300 Type: Carbon Steel
	1	Feedwater Stand Height: 7 ft Construction: Stand Material
	1	Feedwater Control Panel: 1 Tank Individual ADAC-1000 (1 Pressure Control Loop Only) (Nema 12)
	1	ADAC Feedwater Option 1 - 1 Tank

	1	Feedwater Control Touchscreen: 7in Color
	2	Feedwater System 1 Pump Proving Type: Current Sensing Switch
	1	Feedwater Pump Discharge Transmitter (E and H)
	1	Feedwater Tank Temperature Transmitter (E and H)
	1	Feedwater Steam Pressure Transmitter (E and H)
	1	Feedwater Level Control Type: Differential Pressure - 4-20mA
	1	Feedwater Primary MakeUp Valve: 1 Siemens 599 Sizing Info: Based on Full System Flow equates to 34.4 gpm
	1	Feedwater Primary MUV 3 Valve Bypass: 1 1/4" Steel
	1	Feedwater Secondary MakeUp Valve: 1/2 Cv: 4 Siemens 599 Sizing Info: Based on System Make Up Only equates to 17.2 gpm
	1	Feedwater Secondary MUV 3 Valve Bypass: 1" Steel
	1	Feedwater Level Indication: Gauge (Length: 36in)
	1	Feedwater Low Water Alarm: Transmitter Function
	1	Feedwater High Water Alarm: Transmitter Function
	1	Feedwater Low Water Cut Off and Alarm: Nema 1 Switch
	1	PRV (FULL CAPACITY): 1 1/4" SPENCE ED-250psig Sizing Information: Required Capacity: 2136.6pph based on Steam Supply Pressure: 100psi and Steam Supply Safety Valve Setting: 125psi
	1	PRV ByPass with Strainer: 1 1/4in 150lb
	1	Safety Valve #1: 2 J" Kunkle, NPT Tank Connection
	1	Feedwater Entrance Panel Enclosure: NEMA 1
	1	Feedwater Control Circuit Transformer Rating: 0.5kVA
	1	Feedwater Main Power Distribution: UnFused Disconnect 30AMPS NEMA 1 (FW Main Power Distribution Panel)
	2	Feedwater System 1 Individual Power Distribution: Fused 30AMPS (FW Entrance Panel - NEMA 1)
	2	Feedwater System 1 Motor Starter: VSD (10 AMPS) NEMA 1 (FW Motor Starter Panel)
	1	Feedwater Audible Alarm: Electronic Sounder
	1	Feedwater Low Water Cut Off Light: Red
	1	Feedwater Common Remote Alarm Contact
	2	Feedwater Chemical Feed Contact
	1	Feedwater Labor Startup Allowance:
	1	Feedwater Tank Manuals (2): (Spraymaster Boilermate DA O&M/Advanced Deaerator Control/)
	1	Submittals - Dimensional Diagram (Feedwater Tank)
	1	Submittals - Wiring Diagram (Feedwater Tank)
	1	Submittals - ASME Data Report (Feedwater Tank)

CleaverBrooks®

HW Boilers Budget Proposal

SCI Houtzdale

To: Mark Ray
Entech Engineering
201 Penn Street
Reading, PA 19603

By: Randy Rohl
Delval Equipment Corporation
604 General Washington Ave
West Norriton PA 19403 United States
(610)275-3599
randy@delval.com

System Requirements

Proposal Number: 22570526 / Proposal Date: 10/16/18
Job Name: SCI Houtzdale / Project Name: SCI Houtzdale

First System Requirements: Firetube Boiler	
Application:	Hot Water
Fuel Series:	200 - Nat. Gas / No. 2 Oil
Boiler Capacity:	800 HP Input
Design Pressure:	125# Hot Water
Operating Pressure:	30 psig
Safety Valve Setpoint:	125 lb
NOx Emissions Level:	30 ppm NG
Available Site Voltage:	460/3/60
Available Site Gas Pressure:	5 psig
Approximate Site Altitude:	700 ft. ASL
Insurance Requirements:	GE-GAP (NFPA-85), FM (Submittal Included)
Proposed System Solution: CBEX Elite-200-800-125HW (460/3/60) ---30 ppm-HAWK-STD/CFG (Qty: 1)	

Second System Requirements: Firetube Boiler	
Application:	Hot Water
Fuel Series:	200 - Nat. Gas / No. 2 Oil
Boiler Capacity:	500 HP Input
Design Pressure:	125# Hot Water
Operating Pressure:	30 psig
Safety Valve Setpoint:	125 lb
NOx Emissions Level:	30 ppm NG
Available Site Voltage:	460/3/60
Available Site Gas Pressure:	5 psig
Approximate Site Altitude:	700 ft. ASL
Insurance Requirements:	GE-GAP (NFPA-85), FM (Submittal Included)
Proposed System Solution: CBEX Elite-200-500-125HW (460/3/60) ---30 ppm-HAWK-STD/CFG (Qty: 1)	

Model CBEX Elite (100–1,200 HP Firetube)

PRODUCT CAPABILITIES	
BOILER TYPE:	FIRETUBE BOILER
BOILER APPLICATIONS:	STEAM, HOT WATER
BURNER FUEL TYPES*:	NATURAL GAS, PROPANE, DIGESTER GAS, TOWN GAS, #2 OIL, DUAL FUELS
BOILER CAPACITIES*:	100–1,200 HP
DESIGN PRESSURES*:	150, 200, 250, 300 PSIG (STEAM) 30, 125, 150, 200, 250 PSIG (HOT WATER)
NOX EMISSIONS*:	5, 7, 9, 30, 60 PPM

*Some combinations of burner fuel types, boiler capacities, design pressures, and NOx emissions may not be available.

Model CBEX Elite (100–1,200 HP Firetube)

Packaged Boiler & Burner System

- Completely integrated boiler, burner, and control systems offer high efficiency, flexibility, reliability, safety, and ease of maintenance.
- Single-source boiler and burner manufacturer providing excellent service and support for all products, components, and accessories throughout the lifetime of the system.

Two-Pass Wetback Boiler Design

- Cleaver-Brooks exclusive EX technology.
  - Extended surface tubes maintaining turbulent flow increases heat transfer by 85%.
  - Reduced heat transfer rate increases the lifespan of the furnace.
  - Tubes and furnace of the same length reduces pressure vessel thermal stresses.
  - Superior combustion performance for industry-leading NOx and CO reduction.
- Standard 15-year pressure vessel warranty (contact Cleaver-Brooks for more details).
- Stated efficiency (stack loss method) guaranteed with a $10,000-per-full-point rebate.

Integral Head Burner Design

- 10:1 maximum high-to-low fire turndown for select boiler capacities and NOx emissions.
- 5 ppm natural gas NOx emissions available without selective catalytic reduction (SCR).
- Quiet operation, intercooled boiler head, ease of access to burner or pressure vessel, no external flue gas recirculation (FGR) ducting, and exceptional burner life.

HAWK – Integrated Boiler Combustion Control System (Included)

- Individual actuator control of burner fuel and combustion air for fuel-to-air ratio control.
- Integrated burner management system (BMS) with combustion control system (CCS).
- System configuration, combustion settings, process monitoring, alarm management, and history displayed on a colored graphical human-machine interface (HMI).

Level Master – Water Level Control System (Optional, Steam Only)

- Non-contact and non-wearing stainless steel float using magnetostrictive technology.
- Microprocessor-based electronic controller including an alphanumeric LCD display, alarms, continuous float monitoring, blowdown reminders, and blowdown history.
- Constructed in accordance with the ASME BPVC and bears the UL Listing Mark.

Product Model: CBEX Elite-200-800-125HW (460/3/60) ---30 ppm-HAWK-STD/CFG		
Item	**Qty.**	**Description**
#1	1	**Cleaver-Brooks Model: CBEX Elite-200-800-125HW(460/3/60)** 26779000 btu/hr output. Boiler Operating Temp.:190F Return Water Temp.:170F. Operating Pressure:30 psig. Fuel Series: 200 - Nat. Gas / No. 2 Oil First Gas Fuel: Natural Gas (Specific Gravity=0.6);Gas Train Type: Siemens Gas Train Site Pressure: 5 psig Gas Train Size: 3" Job Site Altitude: 700ft 75hp Blower Motor Insurance Requirements:GE-GAP (NFPA-85), FM (Submittal Included) Standard Outlet Connection: 12in Flanged 150lb. F.F., Standard Return Connection: 12in Flanged 150lb. F.F. Standard Main LWCO: McD-M 750MT-120 Probe- Type Configuration Check:Standard Selections User Description Info.:
	1	Pricing valid for 30 days. Expiration: 11/10/2018.
	1	The CBEX Elite Boiler includes an UL Label unless Voided by an option selection.
	1	Firetube Manuals (5): (CBEX Elite_100-1200HP/////Variable Speed Drive - Hawk ICS/////Hawk ICS & O2 Trim/CB780E/784E Burner Control & Operating Info//Hawk 4000)
	1	Fuel Series: 200 - Nat. Gas / No. 2 Oil
	1	Horsepower - 800 HP
	1	Pilot Type: Gas
	1	Emission Level: 30 ppm NG
	1	**O2 Requirements: Constant 3% O2 at 10:1 TD**
	1	Boiler Safety Valve Setting: 125 lb. HW
	1	Drain Valve: NPT-2"
	1	Factory Mount Drain Valve: (NPT-2")
	1	Hot Water ALWCO: McD-M 150S On/Off Float (Standard: None)
	1	Hawk Package: 4000
	1	Water Temperature Transmitter
	1	HAWK Touchscreen Standard: 7" Color Screen Plus
	1	Stack Temperature Transmitter
	1	Remote Emergency Shutoff (115V) - Break Glass Type (Ship Loose): Terminals Only - Switch by Others
	1	Remote Emergency Shutoff Terminals
	1	Combustion Air Interlock: Option 3 - CB limit circuit Relay/Contact, control panel terms. Energized terms. allow boiler start.
	1	Blend pump(s)
	1	System Flow Switch: Terminals Only
	1	Standard Combustion Safeguard Control CB-780E, IR Scan (Honeywell)
	1	Parallel Positioning System: Integrated Parallel Pos
	1	Primary Fuel Actuator (Type: Quick Disconnect)
	1	Secondary Fuel Actuator (Type: Quick Disconnect)
	1	FGR Actuator (Type: Quick Disconnect)
	1	O2 Trim: CB Integrated - Air Trim
	1	Combustion Air Temperature Probe
	1	HAWK Additional Analog Inputs: 8 Additional
	1	Hawk Expanded Annunciation (Discrete Input Module)
	1	BAS Interface: Protonode; Protocol: BACnet MSTP for 1 Processors, 1 Boilers
	1	Protocol Translator RC Panel - Assembled (Shipped Loose)
	1	HAWK Boiler Panel Ethernet Hub: 5 Port

	1	Ethernet Hub: 5 Port (Standard) - RC Panel
	1	Blower Motor Starter: Variable Speed Drive NEMA 1 - 460/3/60 - 75HP
	1	VSD Enclosure Rating - NEMA 1 Free Air - No panel
	1	Natural Gas-3in.-Siemens Gas Train (Standard)
	1	Main Gas Pressure Gauge (Mounted) - Included Per Insurance
	1	Pilot Gas Strainer (100 Mesh Basket - Shipped Loose): 1/2 RP & C,Cast Iron,Y Type
	1	Second Gas Pilot Valve (piped in series) - Included per Insurance
	1	Normally Open Solenoid Vent Valve, Pilot Gas Line, 3/4in. - Included per Ins.
	1	Mount, Pipe, and Wire Oil Pump Assembly on Boiler Baserail. (Oil Tank must be in close proximity to boiler)
	1	Premium Blower Motor - Std
	1	Main Power Disconnect Switch: NonFused - Mounted
	1	Alarm Device - 4 inch Bell and Silencing Switch - Std. w/ Hawk
	1	Contact for Remote Annunciator Point in Conjunction with Boiler Mounted Alarm (Time Delay)
	1	Control and Entrance Panel: Separate Contol and Entrance Panel (NEMA 1) Overall Rating of Finished Panel may Change Depending on Firetube Options selected.
	1	Remote Boiler Status Relay
	1	FM Insurance: Submittal Only: (Components included within NFPA-85 requirements)
	1	NFPA-85: 800HP-Gas / #2 Oil
	1	Start-up Allowance included in boiler base price:
	1	Submittals - Dimensional Diagram (Firetube)
	1	Submittals - Wiring Diagram (Firetube)
	1	Submittals - Test Fire Report (Firetube)
	1	Submittals - ASME Data Report (Firetube)

Product Model: CBEX Elite-200-500-125HW (460/3/60) ---30 ppm-HAWK-STD/CFG		
Item	**Qty.**	**Description**
#2	1	**Cleaver-Brooks Model: CBEX Elite-200-500-125HW(460/3/60** 16738000 btu/hr output. Boiler Operating Temp.:190F Return Water Temp.:170F. Operating Pressure:30 psig. Fuel Series: 200 - Nat. Gas / No. 2 Oil First Gas Fuel: Natural Gas (Specific Gravity=0.6);Gas Train Type: Siemens Gas Train Site Pressure: 5 psig Gas Train Size: 2-2.5" Job Site Altitude: 700ft 30hp Blower Motor Insurance Requirements:GE-GAP (NFPA-85), FM (Submittal Included) Standard Main LWCO: McD-M 750MT-120 Probe- Type Configuration Check:Standard Selections User Description Info.:
	1	Pricing valid for 30 days. Expiration: 11/10/2018.
	1	The CBEX Elite Boiler includes an UL Label unless Voided by an option selection.
	1	Firetube Manuals (5): (CBEX Elite_100-1200HP////Variable Speed Drive - Hawk ICS////Hawk ICS & O2 Trim/CB780E/784E Burner Control & Operating Info//Hawk 4000)
	1	Fuel Series: 200 - Nat. Gas / No. 2 Oil
	1	Horsepower - 500 HP
	1	Pilot Type: Gas
	1	Emission Level: 30 ppm NG
	1	**O2 Requirements: Constant 3% O2 at 10:1 TD**
	1	Boiler Safety Valve Setting: 125 lb. HW
	1	Outlet Connection Change: 12" inch/Flanged 150lb. F.F. in lieu of standard 10 inch/Flanged 150lb. F.F.
	1	Return Connection Change: 12" inch/Flanged 150lb. F.F. in lieu of standard 10 inch/Flanged 150lb. F.F.
	1	Drain Valve: NPT-2"
	1	Factory Mount Drain Valve: (NPT-2")
	1	Hot Water ALWCO: McD-M 150S On/Off Float (Standard: None)
	1	Hawk Package: 4000
	1	Water Temperature Transmitter
	1	HAWK Touchscreen Standard: 7" Color Screen Plus
	1	Stack Temperature Transmitter
	1	Remote Emergency Shutoff (115V) - Break Glass Type (Ship Loose): Terminals Only - Switch by Others
	1	Remote Emergency Shutoff Terminals
	1	Combustion Air Interlock: Option 3 - CB limit circuit Relay/Contact, control panel terms. Energized terms. allow boiler start.
	1	Blend pump(s)
	1	System Flow Switch: Terminals Only
	1	Standard Combustion Safeguard Control CB-780E, IR Scan (Honeywell)
	1	Parallel Positioning System: Integrated Parallel Pos
	1	Primary Fuel Actuator (Type: Quick Disconnect)
	1	Secondary Fuel Actuator (Type: Quick Disconnect)
	1	FGR Actuator (Type: Quick Disconnect)
	1	O2 Trim: CB Integrated - Air Trim
	1	Combustion Air Temperature Probe
	1	HAWK Additional Analog Inputs: 8 Additional
	1	Hawk Expanded Annunciation (Discrete Input Module)
	1	BAS Interface: Protonode; Protocol: BACnet MSTP for 1 Processors, 1 Boilers
	1	Protocol Translator RC Panel - Assembled (Shipped Loose)
	1	HAWK Boiler Panel Ethernet Hub: 5 Port

	1	Ethernet Hub: 5 Port (Standard) - RC Panel
	1	Blower Motor Starter: Variable Speed Drive NEMA 1 - 460/3/60 - 30HP
	1	VSD Enclosure Rating - NEMA 1 Free Air - No panel
	1	Natural Gas-2-2.5in.-Siemens Gas Train (Standard - 2.5 in.)
	1	Main Gas Pressure Gauge (Mounted) - Included Per Insurance
	1	Pilot Gas Strainer (100 Mesh Basket - Shipped Loose): 1/2 RP & C,Cast Iron,Y Type
	1	Second Gas Pilot Valve (piped in series) - Included per Insurance
	1	Normally Open Solenoid Vent Valve, Pilot Gas Line, 3/4in. - Included per Ins.
	1	3 Phase Oil Pump In Lieu of Single Phase
	1	Mount, Pipe, and Wire Oil Pump Assembly on Boiler Baserail. (Oil Tank must be in close proximity to boiler)
	1	Premium Blower Motor - Std
	1	Main Power Disconnect Switch: NonFused - Mounted
	1	Alarm Device - 4 inch Bell and Silencing Switch - Std. w/ Hawk
	1	Contact for Remote Annunciator Point in Conjunction with Boiler Mounted Alarm (Time Delay)
	1	Control and Entrance Panel: Separate Contol and Entrance Panel (NEMA 1) Overall Rating of Finished Panel may Change Depending on Firetube Options selected.
	1	Remote Boiler Status Relay
	1	FM Insurance: Submittal Only: (Components included within NFPA-85 requirements)
	1	NFPA-85: 500HP-Gas / #2 Oil
	1	Start-up Allowance included in boiler base price:
	1	Submittals - Dimensional Diagram (Firetube)
	1	Submittals - Wiring Diagram (Firetube)
	1	Submittals - Test Fire Report (Firetube)
	1	Submittals - ASME Data Report (Firetube)

Dualoy® 3000/L Secondary Containment Pipe and Fittings

Uses and Applications

- Service station product, vent and vapor recovery piping
- Bulk plant terminals and fueling terminals
- Central fuel oil systems
- Marinas and marine terminals (onshore only)
- All piping systems requiring UL or ULC Listing for MV, HB, CT and A&M fuels
- Containment piping for all of the above

Description

Dualoy 3000/L secondary containment systems require pipe one size larger than the primary and specially designed fittings. The system provides complete enclosure of UL- and ULC-Listed Dualoy primary piping used in product lines and vapor recovery lines from the sump at the product storage tank to the shear valve connector at the dispenser, and vent lines from the tank. Dualoy containment systems have been sized for close make-up and ease of installation.

Features of Dualoy 3000/L containment systems include:

- Filament-wound, fiberglass-reinforced pipe with integral liner;
- Compact fittings dimensions to minimize trench excavation;
- Smooth exterior pipe surface that eliminates the need for special end preparation tools;
- Ready accessibility to and complete inspectability of primary fittings prior to closure of the containment;
- Complete testability during installation and at any time thereafter;
- Rapid joint makeup with pre-inserted nuts and ambient cure adhesive.

Listings

Dualoy 3000/L is Listed in the United States with Underwriters Laboratories Standard 971-2004 for nonmetallic underground piping for motor vehicle (MV), high blend (HB), concentrated (CT) and aviation and marine (A&M) fuels for both primary and contained piping systems (File MH9162). Dualoy 3000/L pipe and fittings are also Listed with Underwriters' Laboratories of Canada (File CMH715). In Great Britain the Dualoy/3000L system has been tested and accepted by the London Fire and Civil Defense Authority. Dualoy 3000/L has been issued a Certificate of Compliance to the Institute of Petroleum (IP) Specification by ERA Technology, Ltd.

Performance

Operating pressures to 100 psig
Continuous operating temperatures to 150°F (66°C)
Individual system components may not have the same ratings as the pipe. Refer to the detailed product information for the specific components to determine the pressure rating for the system as a whole.

Secondary employs full-performance pipe — Many contained fuel handling systems employ materials in the secondary that fall far short of the primary piping in regard to chemical resistance and mechanical strength. By contrast, Dualoy 3000/L systems are manufactured with the same high-performance fiberglass-reinforced pipe in the secondary as in the primary. Thus, Dualoy 3000/L containment systems easily withstand both high external loads from backfill and traffic as well as internal pressures as high as 100 psig.

Compact containment fittings — Dualoy 3000/L containment fittings are compact clamshell-type closure pieces. Crossovers can be made with the same centerline-to-centerline dimension as single-wall system.

Piping System Characteristics

Precision pipe exterior eliminates scarfing — Dualoy pipe is manufactured in a proprietary continuous winding process that provides an extremely precise, consistent outside diameter. Light sanding of the pipe end to remove the surface gloss and obtain a suitable bonding surface is the only end prep required, although the scarfing feature of tapering tools can be used.

Easy containment fitting assembly — Dualoy 3000/L containment fitting clamshells are supplied in matched pairs. One half of each pair is fitted with pre-inserted propeller nuts, allowing the fitting to be assembled from one side, using the bolts provided.

Complete retestability — Dualoy 3000/L containment employs rigid-wall pipe and fittings that maintain their slope during the entire service life of the station. When installed with isolating penetration fittings (see page 3), Dualoy 3000/L containment piping can be repeatedly retested whenever desired.

Convenient repair capability — Contained piping systems are occasionally damaged after installation. Damage is generally caused by paving or excavation operations. Dualoy3000/L contained piping systems are designed so that only the damaged section need be replaced instead of the entire line. The 2-inch Dualoy repair coupling is sized so that it can be contained within 4-inch Dualoy 3000/L containment pipe.

Two-inch primary pipe contained within 3-inch containment pipe can be repaired with a UL-listed 2-inch repair coupling. The containment is restored by replacement of a section of the existing containment pipe with a 4-inch containment nipple. The 4-inch replacement nipple is then joined to the existing containment pipe with Dualoy reducing couplings.

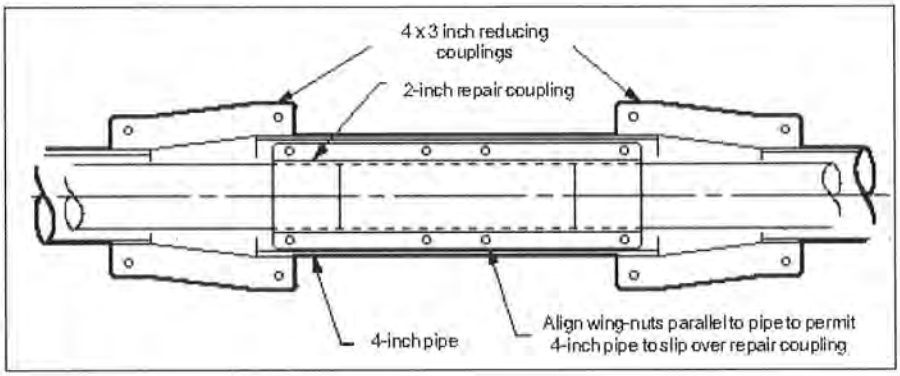

Containment Pipe and Fittings Dimensions

Pipe

Nominal Pipe Size		A	B	C	X_2	No. of Bolt Holes	Wt.
in	mm	in	in	in	in		lb
3	80	3.50	3.32	—	—	—	0.72
4	100	4.50	4.33	—	—	—	1.00
6	150	6.63	6.39	—	—	—	2.10

90° Elbows

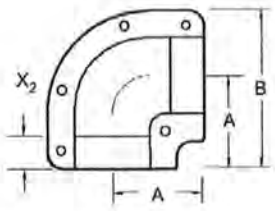

3	80	4.28	7.28	—	1.50	5	1.1
4	100	4.77	8.25	—	1.50	5	1.3
6	150	5.62	10.53	—	2.00	8	1.5

45° Elbows

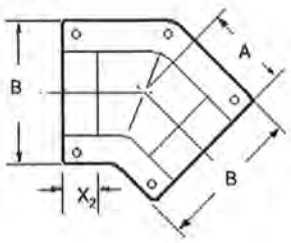

3	80	3.50	6.00	—	1.50	5	0.8
4	100	3.75	7.00	—	1.50	5	1.2
6	150	6.32	9.75	—	2.00	8	1.5

Tees

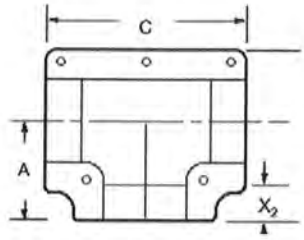

Nominal Pipe Size		A	B	C	X_2	No. of Bolt Holes	Wt.
in	mm	in	in	in	in		lb
3	80	4.28	7.24	8.56	1.50	5	1.2
4	100	4.78	8.25	9.58	1.50	5	1.6
6	150	5.72	10.67	11.65	2.00	6	1.7

Couplings

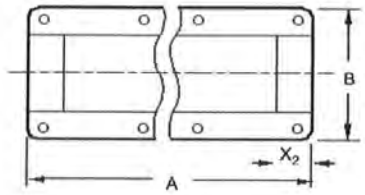

2	50	14.00	4.00	—	1.50	8	1.3
3	80	14.00	6.00	—	1.50	8	1.7
4	100	14.00	7.00	—	1.50	8	2.0
6	150	5.37	9.75	—	4.00	10	2.0

Reducers, Plain and with ¾ inch NPT Outlet

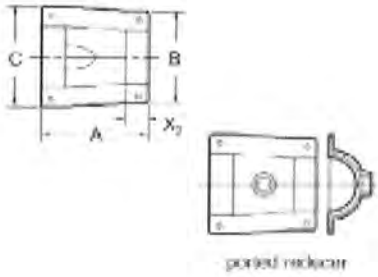

3 x 1½	80 x 40	6.25	4.48	6.10	1.50	4	0.6
3 x 1½	80 x 40	6.25	4.47	6.10	1.50	4	1.1(1)
3 x 2	80 x 50	6.25	4.90	6.10	1.00	4	0.7
3 x 2	80 x 50	6.25	4.90	6.10	1.00	4	1.1(1)
4 x 3	100 x 80	7.00	6.00	7.00	1.50	4	0.9
4 x 3	100 x 80	7.00	6.00	7.00	1.50	4	2.0(1)
6 x 4	150 x 100	7.17	7.62	9.74	2.00	6	1.0

(1) Ported reducer

Sump Penetration Fittings

Sump penetrations are designed for use at turbine sumps and dispenser pans. Plain sump penetration fittings permit the annular space between the primary and secondary lines to communicate with the interior of the sump or pan. Penetration fittings with factory-installed centralizers, sleeve couplings and monitoring ports may be used to isolate the pipe annular space from the sump or pan. When the annular space is so isolated, the secondary containment line can be retested at any time and as often as desired.

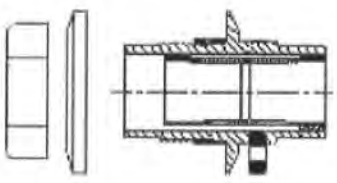

National Oilwell Varco has produced this brochure for general information only, and it is not intended for design purposes. Although every effort has been made to maintain the accuracy and reliability of its contents, National Oilwell Varco in no way assumes responsibility for liability for any loss, damage or injury resulting from the use of information and data herein nor is any warranty expressed or implied. Always cross-reference the bulletin date with the most current version listed at the web site noted in this literature.

North America
17115 San Pedro Ave. Suite 200
San Antonio, Texas 78232 USA
Phone: 210 477 7500

South America
Avenida Fernando Simoes
Recife, Brazil 51020-390
Phone: 55 31 3326 69020

Europe
P.O. Box 6, 4190 CA
Geldermalsen, The Netherlands
Phone: 31 346 587 587

Asia Pacific
No. 7A, Tuas Avenue 3
Jurong, Singapore 639407
Phone: 65 6861 6118

Middle East
P.O. Box 17324
Dubai, UAE
Phone: 971 4881 3566

www.fgspipe.com • fgspipe@nov.com

NOV Fiber Glass Systems

©2013 National Oilwell varco. All rights reserved.
FH3510 March 2013

Dualoy™ 3000/L Fiberglass Pipe

(Product Data)

FUEL HANDLING

Applications

- Service Station
- Vent/Vapor Recovery
- Bulk Plant Terminals
- Fueling Terminals
- Central Fuel Oil Systems
- Marinas Terminals
- Ethanol Fuel Blends
- Diesel Exhaust Fluid
- UL/ULC Systems that require MV, HB, CT, A&M Fuels

Materials and Construction

Filament-wound fiberglass reinforced epoxy pipe with integral epoxy liner and exterior coating. When classified in accordance with ASTM D2310 and ASTM D2996, the pipe meets the following cell limits: RTRP 11CXF1-5420. The operating pressure of the pipe is up to 200 psig (13.8 bar) with continuous operating temperature to 150°F (66°C).

Dualoy 3000/L is Listed with Underwriters Laboratories Standard 971-2004 for nonmetallic underground piping for motor vehicle (MV), high blend (HB), concentrated (CT) and aviation and marine (A&M) fuels (File MH9162). Dualoy 3000/L pipe and fittings are also Listed with Underwriters Laboratories of Canada (File CMH 715). In Great Britain the Dualoy 3000/L system has been tested and accepted by the London Fire and Civil Defence Authority. Dualoy 3000/L has been issued a Certificate of Compliance to the Institute of Petroleum (IP) Specification by ERA Technology, Ltd.

Performance

Individual system components may not have the same ratings as the pipe. Refer to the detailed product information for the specific components to determine the pressure rating for the system as a whole.

Fittings

Compression-molded and filament-wound fiberglass reinforced epoxy.

For dimensions of fittings, consult publication Dualoy 3000/L Fittings Dimensions.

Pressure ratings of fittings without UL listing are available on request

Joining System

- **Bell & Spigot** - The primary joining method for fitting joints.

Nominal Dimensional Data

Pipe Size		Inside Diameter		Outside Diameter[1]		Wall Thickness				Capacity		Weight		Max. Deflection per 20 ft Joint	Min. Length Req. for 10° Change		Stiffness Factor[2]	
						Total		Structual										
in	mm	in	mm	in	mm	in	mm	in	mm	gal/ft	l/m	lb/ft	kg/m	deg	ft	m	lb•in²/in²	N•m
2	50	2.21	56	2.37	60	0.080	2.03	0.060	1.5	0.20	2.50	0.47	0.70	15	13	4	45	5.1
3	80	3.32	84	3.50	89	0.085	2.16	0.065	1.6	0.45	5.60	0.72	1.07	9	22	7	75	8.5
4	100	4.33	110	4.50	114	0.087	2.21	0.070	1.8	0.77	2.92	1.00	1.49	7.5	27	8	60	6.8
6	150	6.39	162	6.63	168	0.120	3.10	0.100	2.5	1.67	6.35	2.10	3.13	5	40	12	275	31.1

[1] Typical outside diameters of 2 through 6-inch pipe are within API, ASTM and ANSI fiberglass and steel pipe dimensions.

[2] At 5% deflection.

View of Joint Illustrations (Joint illustration only depicts type of connetion available, not type of pipe featured in data sheet)

Bell & Spigot

Typical Pipe Performance

Nominal Pipe Size		Pressure Rating[1]		Ultimate Internal Pressure [1]		Ultimate Collapse Pressure[2]	
in	mm	psig	MPa	psig	MPa	psig	MPa
2	50	200	2.07	3200	22.1	153	1.05
3	80	200	1.38	2400	16.5	90	0.62
4	100	175	1.21	2000	13.8	39	0.27
6	150	175	1.21	2000	13.8	38	0.26

[1] At 80°F (27°C).

[2] At 80°F (27°C). For continuous service do not exceed 75% of these values.

Typical Mechanical Properties

Pipe Property[1]			Method
Tensile Strength			
Longitudinal	35,000 psi	241.3 MPa	ASTM D2105
Circumferential	70,000 psi	482.7 MPa	ASTM D1599
Poisson's Ratio ν_{ha}[2] - ν_{ha}[3]	0.16 - 0.26		FGSTM
Tensile Modulus			
Longitudinal	25,000 psi	172.4 Mpa	ASTM D2105
Circumferential	38,000 psi	262.0 MPa	FGSTM
Compressive Strength			
Longitudinal	24,500 psi	168.9 MPa	FGSTM
Compressive Modulus			
Longitudinal	26,000 psi	179.3 MPa	FGSTM
Cyclic	8,000 psi	55.2 MPa	ASTM D2992 Procedure A

Typical Physical Properties

Pipe Property	Value	Value	Method
Thermal Conductivity	1.7 BTU-in/hr•ft²•°F	7.6 W/m-°C	ASTM C177
Thermal Expansion	8.5 x 10^{-6} in/in °F	15.3 x 10^{-6} cm/cm °C	ASTM D696
Friction Factor	Hazen-Williams 150.0		-
Absolute Roughness	0.00021 in	0.00053 mm	
Specific Gravity	1.8		ASTM D792
Barcol Hardness	65.0 (Impressor 934-1)		ASTM D2583

[1] Based on structural wall thickness.

[2] ν_{ha} = The ratio of axial strain to hoop strain resulting from stress in the hoop direction.

[3] ν_{ah} = The ratio of hoop strain to axial strain resulting from stress in the axial direction.

Pipe Length

Size		Standard		Random	
in	mm	ft	m	ft	m
2-6	50-150	20	6.1	17-21	5.2 - 6.4

Minimum Bending Radius

Size		Minimum Bending Radius[1]	
in	mm	ft	m
2	50	75	23
3	80	100	38
4	100	150	46
6	150	200	61

[1] At rated pressure. Sharper bends may create excessive stress concentrations. **Do not** bend pipe until adhesive has cured.

National Oilwell Varco has produced this brochure for general information only, and it is not intended for design purposes. Although every effort has been made to maintain the accuracy and reliability of its contents, National Oilwell Varco in no way assumes responsibility for liability for any loss, damage or injury resulting from the use of information and data herein nor is any warranty expressed or implied. Always cross-reference the bulletin date with the most current version listed at the web site noted in this literature.

Fiber Glass Systems
17115 San Pedro Avenue, Ste 200
San Antonio, Texas 78232 USA
Phone: 210 477 7500
Fax: 210 477 7560

© 2016 National Oilwell Varco All rights reserved
FH3500ENG August 2016

Most Comprehensive Offering for HVAC Applications

Butterfly Valve

BELIMO

The Belimo Advantage

Butterfly Valves are fundamental components in large hydronic systems. Unfortunately, most butterfly valves are less than ideal – they leak, their running times are not optimized for HVAC applications, they are heavy, it's hard to access wiring, and they cannot be put into operation quickly.

Belimo's butterfly valve series are the exception; with a complete range of resilient seat, grooved, and high-performance butterfly valve assemblies, sizes from 2" to 24", and variety of actuator control signal inputs to meet all your needs. Belimo assemblies offer zero leakage along with NEMA 2 or 4X rated actuator enclosures, designed to provide ease of installation, application flexibility, longevity, and reliability. Fail-safe actuators are available on butterfly valves up to 12" for emergency control sequences. Typical applications include chiller and boiler isolation, cooling tower isolation, summer/winter change-over control, large air handler coil control and primary bypass to maintain minimum water flow to a chiller or boiler plant.

Resilient Seated Butterfly Valves Efficient Solution

Belimo HD/L series lug resilient seated butterfly valves are designed to meet the needs of HVAC and commercial applications requiring zero leakage. The large Cv values provide an economical control valve solution for larger flow applications used in ANSI flanged piping systems. The technologically advanced L series butterfly valve assembly is designed specifically for HVAC applications; it offers an intelligent, energy efficient, and reliable high flow solution with a focus on ease of installation, application flexibility, and longevity.

- Manual handles available for isolation applications
- Saves energy with up to 80% less power consumption with PR/PKR actuator than currently available solutions
- Zero leakage improves system performance with self-adjusting actuator close-off and unique seat and disc design ensures positive valve sealing while maintaining low seating torque on 2-way models
- Easy troubleshooting with the PR/PKR unique position indicator, viewable from long distances and any angle
- Elongated valve neck provides thermal isolation to reduce heat transfer and condensation build-up on the actuator
- EPDM valve liner provides superior close-off and lower torque requirements

Sizes: 2" to 24" (2-way & 3-way)

ANSI 125/150 flange design

Stainless steel disc and stem standard

Ductile iron ASTM A536

Close off up to 200 psi

Media temp -22°F to 250°F [-30°C to 120°C]

Grooved Butterfly Valves Quick and Easy Connections without Welding

Grooved Victaulic butterfly valve series are engineered and manufactured for dependable, trouble-free performance offering superior flow control and durable, long-lasting reliability. The unique design of the offset disc provides increased flow with a longer life expectancy than most conventional valves, due to the tapered disc engaging the seat only at the beginning or end of the stroke.

- No welding is required making it a perfect retrofit solution for buildings where welding is not allowed
- Quick and easy connections with fewer bolts to tighten and no loose parts offering faster installation
- Full bi-directional shut-off and dead-end service capabilities to the full pressure rated up to 300 psi
- Cartridge style seat incorporates an elastomer bonded to a phenolic stabilizing ring, eliminating elastomer movement and reducing seat tearing or fatiguing due to bunching
- Five bushing design completely isolates the valve shaft from the body, resulting in increased control of the valve disc, lower valve seating torque, and longer valve life

Sizes: 2" to 12" (2-way & 3-way)
Grooved ANSI / AWWA (C606)
Electrolysis nickel coated disc and stainless steel stem
Ductile iron ASTM A536, 300-pound body
Close off 200 psi (for most combinations)
Media temp -22°F to 250°F [-30°C to 120°C]

High-Performance Butterfly Valves Precise Control for High-Velocity Applications

SHP butterfly valve assemblies are designed for high-performance shut-off, modulating and isolation service. The machined seat design and blow out proof solid shaft provides better torque consistency which results in longer actuator life and leakage rating Class IV per ASME FCI 70-2. Designed for use in ANSI Class 150 and ANSI Class 300 piping systems and supplied standard lug style body designs with range abilities of 100:1, 0% leakage ratings, and a maximum valve velocity of 32 FPS. Configurations are available for harsh conditions and applications requiring nominal pressure and temperature ratings.

- Underbody seat and double offset, disc design ensures positive valve sealing to ensure leak free performance
- Machined seat design and blow out proof solid shaft provides better torque consistency
- Steam service to 50 psi inlet pressure
- Unique seat and disc design provides bi-directional bubble-tight shutoff at rated pressure/temperatures
- Soft seat design ensures self-energized seal with minimal wear
- Full lug body design cast in carbon steel for superior performance

Sizes: 2" to 30" (2-way & 3-way)
ASME/ANSI 150 or ASME/ANSI 300
Stainless steel disc and stainless steel stem
Carbon steel full lug
Close off 285 or 600 psi
Media temp -22°F to 400°F [-30°C to 200°C]

Intelligent Butterfly Valve Assemblies

The resilient seated, grooved, and high-performance butterfly valve with PR actuator series are designed specifically to meet the needs of HVAC applications requiring zero leakage. The assemblies provide simplified setup, diagnostics and superior application data access with BACnet and Near Field Communication built-in.

Configuration		Size		Resilient Seat		Grooved		High Performance	
		Inches	DN	Non Fail-Safe	Fail-Safe	Non Fail-Safe	Fail-Safe	Non Fail-Safe	Fail-Safe
2-Way	3-Way	2	50	■	■	■	■	■	■
		2½	65	■	■	■	■	■	■
		3	80	■	■	■	■	■	■
		4	100	■	■	■	■	■	■
		5	125	■	■	■	■	■	■
		6	150	■	■	■	■	■	■
		8	200	■	■	■		■	
		10	250	■	■	■		■	
		12	300	■	■	■		■	
		14	350	■	■			■	
		16	400	■	■			■	
		18	450	■	■			■	
		20	500	■	■			■	
		24	600	■	■			■	

■ Available with PR and or PKR actuation offering:

- 100% duty cycle rating for increased actuator life
- Saves energy with up to 80% less power consumption and reduces transformer and wiring costs
- Self-adjusting close-off design provides zero leakage and improves system performance
- Industry leading fail-safe function and universal power supply input 24-240 VAC / 24-125 VDC provides application flexibility
- Unique position indication is viewable from long distances and any angle for easy troubleshooting
- BACnet and NFC provide simplified setup and diagnostics, as well as superior application data access

5 YEAR WARRANTY · GLOBAL SUPPORT · TESTED QUALITY · ON TIME DELIVERY · WWW EXTENSIVE SERVICE

Belimo Americas

USA, Latin America, and the Caribbean: www.belimo.us
Canada: www.belimo.ca
Brazil: www.belimo.com.br

Belimo Worldwide: www.belimo.com

BELIMO

P. 01/18 - Subject to change. © Belimo Aircontrols (USA), Inc.

A36 Immersion Probes w/ nylon fitting

Temperature Sensors

Rev. 12/12/16

Features & Options

- Probe Lengths: 2", 4" & 8" (fit standard BAPI Thermowell lengths)
- Series 304 Stainless Steel Probes and three Enclosure Styles
- Double Encapsulated Sensors & Etched Teflon Leadwires

Immersion Units are available in 2", 4" and 8" probe lengths. The sensor is potted inside a 1/4" stainless steel probe with thermally conductive compound.

All Immersion Units have etched Teflon leadwires and double encapsulated sensors to create a watertight package that can withstand high humidity and condensation.

Immersion Units come standard with a 2"x4" steel J-Box but are also available with the metal Weatherproof enclosure or the new BAPI-Box Crossover enclosure.

J-Box (Standard)

BAPI-Box Crossover (BBX or BBX6)

The BAPI-Box Crossover

The new BAPI-Box Crossover enclosure features a hinged cover with thumb latch for easy termination. It is available with a pierceable knockout plug for the open port and a watertight gasket for the cover.

(Shown with optional plug and gasketed cover.)

BAPI Thermowells

Immersion Unit Probes are designed to be inserted into a Thermowell. For more info on Thermowells, see page A40.

Specifications

Environmental Operation Range:
Temperature:
BAPI-Box Crossover: -40 to 85 °C
Other Enclosures: -40 to 100 °C
Humidity: 0 to 100%, non-condensing

Sensing Element:
Thermistor or RTD (See Sensors Section for Specs.)

Probe Material:
Stainless Steel, 1/4" diameter

Enclosure Material:
Junction Box: Galvanized Steel
BAPI-Box Crossover:
UV-resistant polycarbonate, UL94, V-0

Enclosure Rating:
Junction Box: IP20, NEMA 1
BAPI-Box Crossover (BBX): IP10, NEMA 1
BAPI-Box Crossover (BBX6): IP66, NEMA 4X

Encl. Dimensions: H x W x D
BAPI-Box Crossover:
3.1 x 2.2 x 1.9" (79 x 56 x 49mm)
Junction Box
4.2 x 3.9 x 1.94" (106 x 98.4 x 49mm)

(For enclosure dimension drawings, see the end of the section.)

Building Automation Products, Inc. • 750 North Royal Avenue, Gays Mills, WI 54631 USA
Tel: +1-608-735-4800 • Fax: +1-608-735-4804 • Email: sales@bapihvac.com • Web: www.bapihvac.com

Use the Option Selection Guide below to create your custom part number. Replace the number and parenthesis with the designator for each selection. Skip the designator and dashes for optional selections that are not required in your configuration.

Immersion Sensor Option Selection Guide

BA/ (**#1**) - (**#2**) - (**#3**) - (**#4**)

#1: Temperature Sensor (required)

1.8K ..... 1.8K Thermistor
3K ..... 3K Thermistor
10K-2 ..... 10K-2 Thermistor
10K-3 ..... 10K-3 Thermistor
10K-3[11K] ..... 10K-3[11K] Thermistor
20K ..... 20K Thermistor

1K[375] ..... 1K Platinum RTD (375 curve)
1K[NI] ..... 1K Ω Nickel RTD
1K ..... 1K Platinum RTD (385 curve)

Transmitters below require a BAPI-Box Crossover Enclosure
T1K[32 TO 212F] ..... 1K Plat. RTD Transmitter, 4 to 20 mA Output, 32 to 212°F Range
T1K[20 TO 120F] ..... 1K Plat. RTD Transmitter, 4 to 20 mA Output, 20 to 120°F Range
T1K[0 TO 100F] ..... 1K Plat. RTD Transmitter, 4 to 20 mA Output, 0 to 100°F Range

T1K[0 TO 100C] ..... 1K Plat. RTD Transmitter, 4 to 20 mA Output, 0 to 100°C Range
T1K[-7 TO 49C] ..... 1K Plat. RTD Transmitter, 4 to 20 mA Output, -7 to 49°C Range
T1K[-18 TO 38C] ..... 1K Plat. RTD Transmitter, 4 to 20 mA Output, -18 to 38°C Range

Matched Transmitters are also available. Contact your BAPI representative for ordering.

#2: Probe Type and Length (required)

I-2" ..... Immersion, 2" (51mm) length
I-4" ..... Immersion, 4" (102mm) length
I-8" ..... Immersion, 8" (203mm) length

#3: Enclosure and Lead Length (optional, comes standard with Junction Box)

BBX ..... BAPI-Box Crossover (IP10, NEMA 1)
BBX6 ..... BAPI-Box Crossover with Gasket and Knockout Plug (IP66, NEMA 4X)

#4: Test & Balance or Terminal Strip (optional, requires a BAPI-Box Crossover Enclosure)

TB ..... Test & Balance Switch
TS ..... Terminal Strip Connection

Additional options are available for these units but not shown in this Selection Guide. Contact your BAPI representative for the complete list of options. Submittal sheets without List Prices can be downloaded from our website at www.bapihvac.com

Example Number: BA/ (**10K-2**) - (**I-2"**) - (**BBX6**) - ( )

Actual Number (with parenthesis removed): BA/10K-2-I-2"-BBX66

Description: 10K-2 Thermistor, Immersion Sensor, BAPI-Box Crossover (IP66), No Test and Balance or Terminal Strip.

Your Number: BA/

STANDARD TYPE 1 ENCLOSURE WITH KEYED LOCK

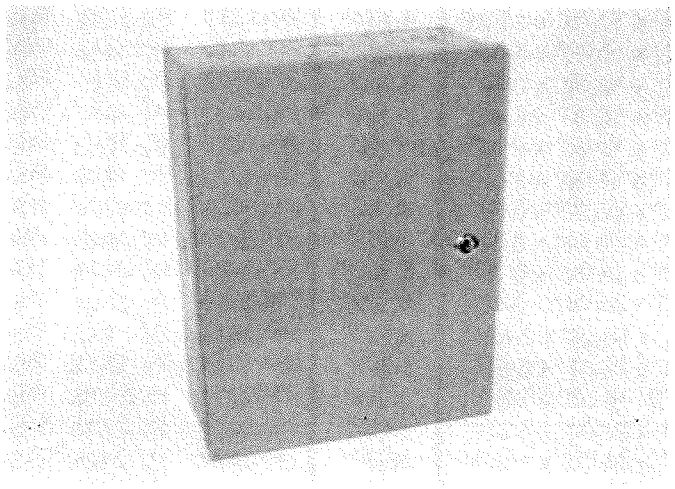

Industry Standards
UL 50, Type 1
Nema Type 1

UL LISTED c UL
UL File E235575

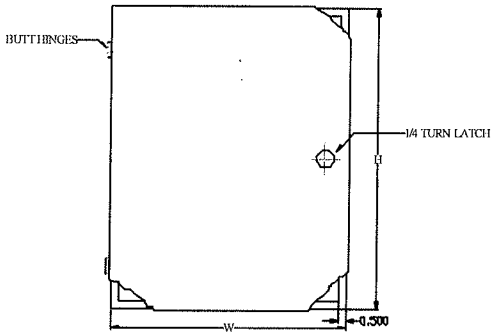

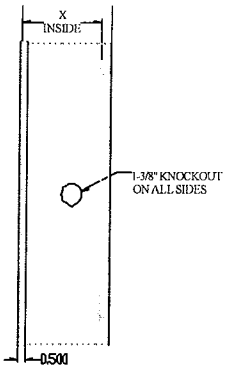

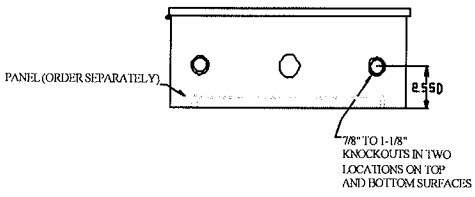

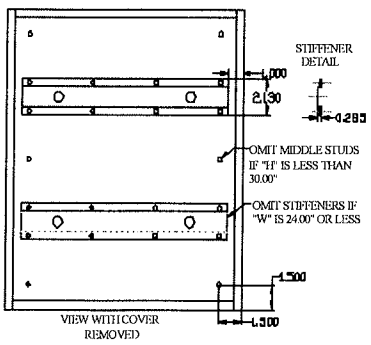

OPTIONS: * THE FOLLOWING KNOCKOUT SIZES ARE AVAILABLE AS SPECIAL ORDER ITEMS:

- ½" TO ¾"
- ¾" TO 1"
- 1" TO 1-¼"

PLEASE CALL FOR DETAILS

STANDARD TYPE 1 ENCLOSURE WITH KEYED LOCK						
CATALOG NUMBER	BODY/DOOR STEEEL GAUGE	ENCLOSURE SIZE H x W x D	X	BACK PANEL OPTIONS SEE BACK PANEL PAGES FOR SPECIFICATIONS		
N1-080604K	16/16	8.00" x 6.00" x 4.00"	3.362"	PP-0806	P2-0806	PS-0806
N1-100804K	16/16	10.00" x 8.00" x 4.00"	3.362"	PP-1008	P2-1008	PS-1008
N1-121204K	16/16	12.00" x 12.00" x 4.00"	3.362"	PP-1212	P2-1212	PS-1212
N1-171205K	16/16	17.375" x 12.75" x 5.625"	4.987"	PP-1712	P2-1712	PS-1712
N1-121006K	16/16	12.00" x 10.00" x 6.00"	5.362"	PP-1210	P2-1210	PS-1210
N1-121206K	16/16	12.00" x 12.00" x 6.00"	5.362"	PP-1212	P2-1212	PS-1212
N1-141206K	16/16	14.00" x 12.00" x 6.00"	5.362"	PP-1412	P2-1412	PS-1412
N1-161206K	16/16	16.00" x 12.00" x 6.00"	5.362"	PP-1612	P2-1612	PS-1612
N1-181606K	16/16	18.00" x 16.00" x 6.00"	5.362"	PP-1816	P2-1816	PS-1816
N1-182006K	16/16	18.00" x 20.00" x 6.00"	5.362"	PP-1820	P2-1820	PS-1820
N1-242006K	16/14	24.00" x 20.00" x 6.00"	5.362"	PP-2420	P2-2420	PS-2420
N1-242406K	16/14	24.00" x 24.00" x 6.00"	5.362"	PP-2424	P2-2424	PS-2424
N1-362406K	14/14	36.00" x 24.00" x 6.00"	5.362"	PP-3624	P2-3624	PS-3624
N1-161206DK	16/16	16.00" x 12.00" x 6.625"	5.987"	PP-1612	P2-1612	PS-1612
N1-161606DK	16/16	16.00" x 16.00" x 6.625"	5.987"	PP-1616	P2-1616	PS-1616
N1-201606DK	16/16	20.00" 16.00" 6.625"	5.987"	PP-2016	P2-2016	PS-2016
N1-242006DK	16/14	24.00" x 20.00" x 6.625"	5.987"	PP-2420	P2-2420	PS-2420
N1-242406DK	16/14	24.00" x 24.00" x 6.625"	5.987"	PP-2424	P2-2424	PS-2424
N1-302406DK	16/14	30.00" x 24.00" x 6.625"	5.987"	PP-3024	P2-3024	PS-3024
N1-362406DK	14/14	36.00" x 24.00" x 6.625"	5.987"	PP-3624	P2-3624	PS-3624
N1-121208K	16/16	12.00" x 12.00" x 8.00"	7.362"	PP-1212	P2-1212	PS-1212
N1-141208K	16/16	14.00" x 12.00" x 8.00"	7.362"	PP-1412	P2-1412	PS-1412
N1-242408DK	16/14	24.00" x 24.00" x 8.625"	7.987"	PP-2424	P2-2424	PS-2424
N1-302408DK	16/14	30.00" x 24.00" x 8.625"	7.987"	PP-3024	P2-3024	PS-3024
N1-362408DK	14/14	36.00" x 24.00" x 8.625"	7.987"	PP-3624	P2-3624	PS-3624
N1-242009K	16/14	24.00" x 20.00" x 9.375"	8.737"	PP-2420	P2-2420	PS-2420
N1-242409K	16/14	24.00" x 24.00" x 9.375"	8.737"	PP-2424	P2-2424	PS-2424
N1-362409K	14/14	36.00" x 24.00" x 9.375"	8.737"	PP-3624	P2-3624	PS-3624
N1-353009K	14/14	35.00" x 30.00" x 9.375"	8.737"	PP-3530	P2-3530	PS-3530
N1-423609K	14/14	42.00" x 36.00" x 9.375"	8.737"	PP-4236	P2-4236	PS-4236
N1-493009K	14/14	49.25" x 30.00" x 9.375"	8.737"	PP-4930	P2-4930	PS-4930
N1-242412K	16/14	24.00" x 24.00" x 12.625"	11.987"	PP-2424	P2-2424	PS-2424
N1-302412K	14/14	30.00" x 24.00" x 12.625"	11.987"	PP-3024	P2-3024	PS-3024
N1-362412K	14/14	36.00" x 24.00" x 12.625"	11.987"	PP-3624	P2-3624	PS-3624

Applications: Designed for indoor applications which do not have oil-tight and dust-tight requirements.

Construction:
* Steel fabricated doors and enclosures
* Doors secured with butt hinges and keyed quarter turn latch
* Mounting holes supplied on back of enclosure
* Enclosure design allows mounting with doors opening either left or right
* Standoffs provided for mounting of optional back panels
* Various sizes of knockouts are supplied on all four sides of the enclosure

Finish:
* ANSI-61 gray powder coat
* Optional colors available, please call for details

Accessories:
* Back panels (see reference tables)

TYPE 1 ENCLOSURE WITH CONTINUOUS HINGE AND KEYED LOCK

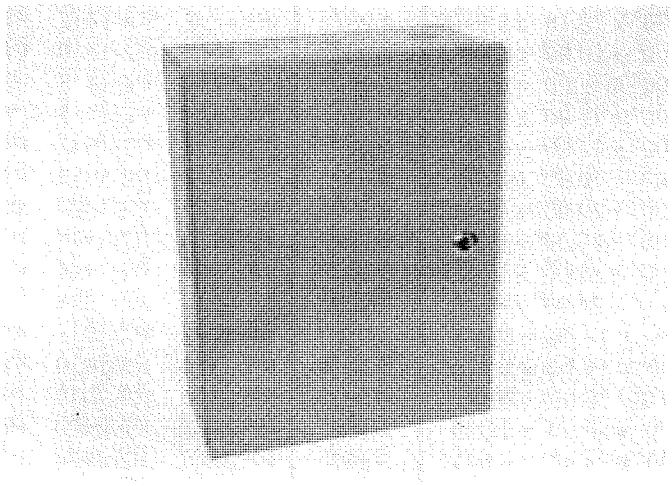

Industry Standards
UL 50, Type 1
Nema Type 1

UL LISTED c UL
UL File E235575

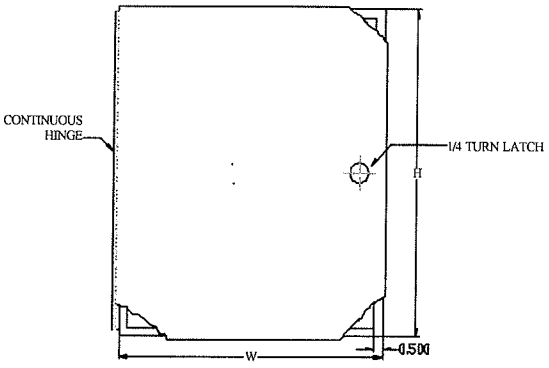

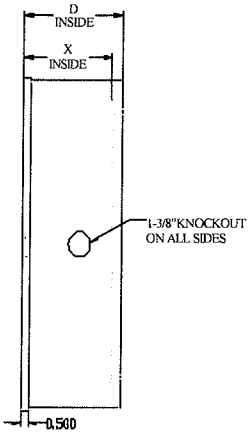

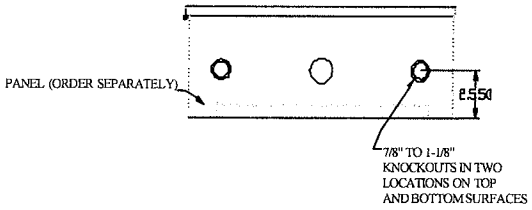

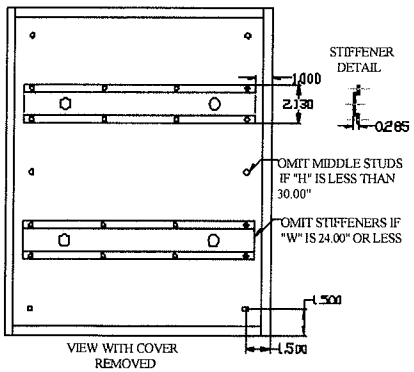

OPTIONS: * THE FOLLOWING KNOCKOUT SIZES ARE AVAILABLE AS SPECIAL ORDER ITEMS:

- ½" TO ¾"
- ¾" TO 1"
- 1" TO 1-¼"

PLEASE CALL FOR DETAILS

TYPE 1 ENCLOSURE WITH CONTINUOUS HINGE AND KEYED LOCK						
CATALOG NUMBER	BODY/DOOR STEEEL GAUGE	ENCLOSURE SIZE H x W x D	X	BACK PANEL OPTIONS SEE BACK PANEL PAGES FOR SPECIFICATIONS		
N1C-080604K	16/16	8.00" x 6.00" x 4.00"	3.362"	PP-0806	P2-0806	PS-0806
N1C-100804K	16/16	10.00" x 8.00" x 4.00"	3.362"	PP-1008	P2-1008	PS-1008
N1C-121204K	16/16	12.00" x 12.00" x 4.00"	3.362"	PP-1212	P2-1212	PS-1212
N1C-171205K	16/16	17.375" x 12.75" x 5.625"	4.987"	PP-1712	P2-1712	PS-1712
N1C-121006K	16/16	12.00" x 10.00" x 6.00"	5.362"	PP-1210	P2-1210	PS-1210
N1C-121206K	16/16	12.00" x 12.00" x 6.00"	5.362"	PP-1212	P2-1212	PS-1212
N1C-141206K	16/16	14.00" x 12.00" x 6.00"	5.362"	PP-1412	P2-1412	PS-1412
N1C-161206K	16/16	16.00" x 12.00" x 6.00"	5.362"	PP-1612	P2-1612	PS-1612
N1C-181606K	16/16	18.00" x 16.00" x 6.00"	5.362"	PP-1816	P2-1816	PS-1816
N1C-182006K	16/16	18.00" x 20.00" x 6.00"	5.362"	PP-1820	P2-1820	PS-1820
N1C-242006K	16/14	24.00" x 20.00" x 6.00"	5.362"	PP-2420	P2-2420	PS-2420
N1C-242406K	16/14	24.00" x 24.00" x 6.00"	5.362"	PP-2424	P2-2424	PS-2424
N1C-362406K	14/14	36.00" x 24.00" x 6.00"	5.362"	PP-3624	P2-3624	PS-3624
N1C-161206DK	16/16	16.00" x 12.00" x 6.625"	5.987"	PP-1612	P2-1612	PS-1612
N1C-161606DK	16/16	16.00" x 16.00" x 6.625"	5.987"	PP-1616	P2-1616	PS-1616
N1C-201606DK	16/16	20.00" 16.00" 6.625"	5.987"	PP-2016	P2-2016	PS-2016
N1C-242006DK	16/14	24.00" x 20.00" x 6.625"	5.987"	PP-2420	P2-2420	PS-2420
N1C-242406DK	16/14	24.00" x 24.00" x 6.625"	5.987"	PP-2424	P2-2424	PS-2424
N1C-302406DK	16/14	30.00" x 24.00" x 6.625"	5.987"	PP-3024	P2-3024	PS-3024
N1C-362406DK	14/14	36.00" x 24.00" x 6.625"	5.987"	PP-3624	P2-3624	PS-3624
N1C-121208K	16/16	12.00" x 12.00" x 8.00"	7.362"	PP-1212	P2-1212	PS-1212
N1C-141208K	16/16	14.00" x 12.00" x 8.00"	7.362"	PP-1412	P2-1412	PS-1412
N1C-242408DK	16/14	24.00" x 24.00" x 8.625"	7.987"	PP-2424	P2-2424	PS-2424
N1C-302408DK	16/14	30.00" x 24.00" x 8.625"	7.987"	PP-3024	P2-3024	PS-3024
N1C-362408DK	14/14	36.00" x 24.00" x 8.625"	7.987"	PP-3624	P2-3624	PS-3624
N1C-242009K	16/14	24.00" x 20.00" x 9.375"	8.737"	PP-2420	P2-2420	PS-2420
N1C-242409K	16/14	24.00" x 24.00" x 9.375"	8.737"	PP-2424	P2-2424	PS-2424
N1C-362409K	14/14	36.00" x 24.00" x 9.375"	8.737"	PP-3624	P2-3624	PS-3624
N1C-353009K	14/14	35.00" x 30.00" x 9.375"	8.737"	PP-3530	P2-3530	PS-3530
N1C-423609K	14/14	42.00" x 36.00" x 9.375"	8.737"	PP-4236	P2-4236	PS-4236
N1C-493009K	14/14	49.25" x 30.00" x 9.375"	8.737"	PP-4930	P2-4930	PS-4930
N1C-242412K	16/14	24.00" x 24.00" x 12.625"	11.987"	PP-2424	P2-2424	PS-2424
N1C-302412K	14/14	30.00" x 24.00" x 12.625"	11.987"	PP-3024	P2-3024	PS-3024
N1C-362412K	14/14	36.00" x 24.00" x 12.625"	11.987"	PP-3624	P2-3624	PS-3624

Applications: Designed for indoor applications which do not have oil-tight and dust-tight requirements.

Construction:
* Steel fabricated doors and enclosures
* Doors secured with continuous hinges and keyed quarter turn latch
* Mounting holes supplied on back of enclosure
* Enclosure design allows mounting with doors opening either left or right
* Standoffs provided for mounting of optional back panels
* Various sizes of knockouts are supplied on all four sides of the enclosure

Finish:
* ANSI-61 gray powder coat
* Optional colors available, please call for details

Accessories:
* Back panels (see reference tables)

TYPE 1 ENCLOSURE WITH LIFT-OFF HINGES AND KEYED LOCK

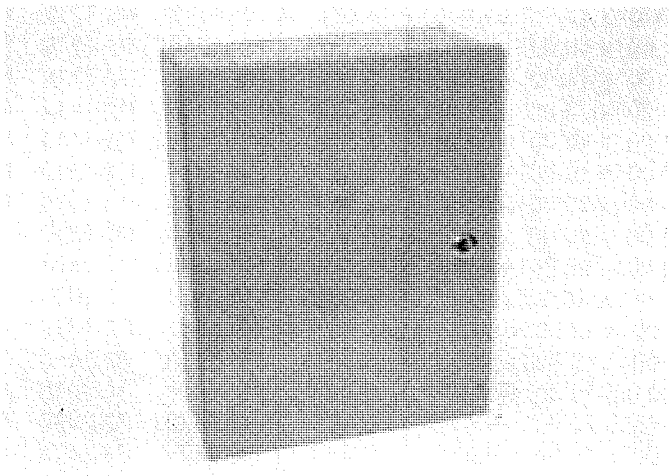

Industry Standards
UL 50, Type 1
Nema Type 1

UL File E235575

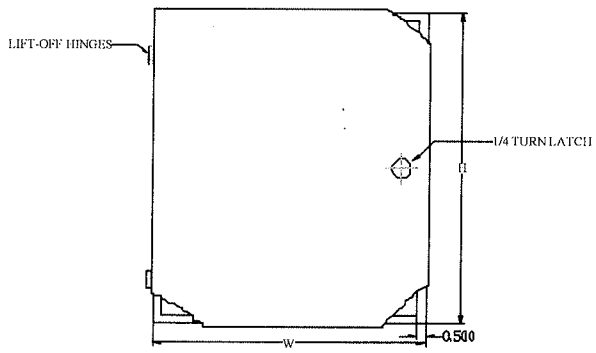

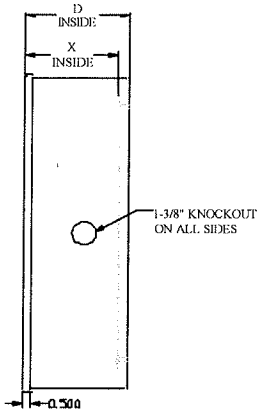

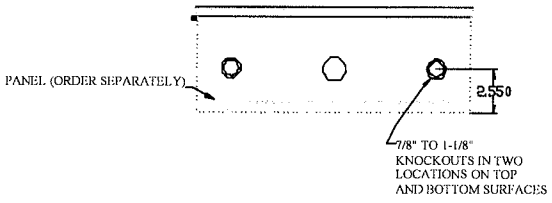

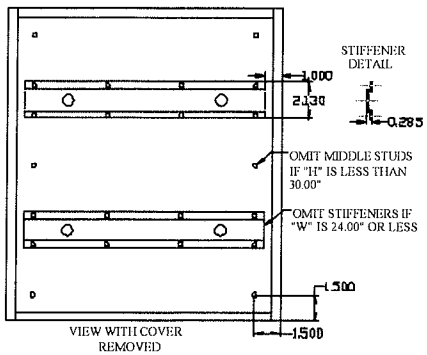

OPTIONS: * THE FOLLOWING KNOCKOUT SIZES ARE AVAILABLE AS SPECIAL ORDER ITEMS:

- $\frac{1}{2}$" TO $\frac{3}{4}$"
- $\frac{3}{4}$" TO 1"
- 1" TO 1-$\frac{1}{4}$"

PLEASE CALL FOR DETAILS

TYPE 1 ENCLOSURE WITH LIFT-OFF HINGES AND KEYED LOCK						
CATALOG NUMBER	BODY/DOOR STEEEL GAUGE	ENCLOSURE SIZE H x W x D	X	BACK PANEL OPTIONS SEE BACK PANEL PAGES FOR SPECIFICATIONS		
N1LR-080604K	16/16	8.00" x 6.00" x 4.00"	3.362"	PP-0806	P2-0806	PS-0806
N1LR-100804K	16/16	10.00" x 8.00" x 4.00"	3.362"	PP-1008	P2-1008	PS-1008
N1LR-121204K	16/16	12.00" x 12.00" x 4.00"	3.362"	PP-1212	P2-1212	PS-1212
N1LR-171205K	16/16	17.375" x 12.75" x 5.625"	4.987"	PP-1712	P2-1712	PS-1712
N1LR-121006K	16/16	12.00" x 10.00" x 6.00"	5.362"	PP-1210	P2-1210	PS-1210
N1LR-121206K	16/16	12.00" x 12.00" x 6.00"	5.362"	PP-1212	P2-1212	PS-1212
N1LR-141206K	16/16	14.00" x 12.00" x 6.00"	5.362"	PP-1412	P2-1412	PS-1412
N1LR-161206K	16/16	16.00" x 12.00" x 6.00"	5.362"	PP-1612	P2-1612	PS-1612
N1LR-181606K	16/16	18.00" x 16.00" x 6.00"	5.362"	PP-1816	P2-1816	PS-1816
N1LR-182006K	16/16	18.00" x 20.00" x 6.00"	5.362"	PP-1820	P2-1820	PS-1820
N1LR-242006K	16/14	24.00" x 20.00" x 6.00"	5.362"	PP-2420	P2-2420	PS-2420
N1LR-242406K	16/14	24.00" x 24.00" x 6.00"	5.362"	PP-2424	P2-2424	PS-2424
N1LR-362406K	14/14	36.00" x 24.00" x 6.00"	5.362"	PP-3624	P2-3624	PS-3624
N1LR-161206DK	16/16	16.00" x 12.00" x 6.625"	5.987"	PP-1612	P2-1612	PS-1612
N1LR-161606DK	16/16	16.00" x 16.00" x 6.625"	5.987"	PP-1616	P2-1616	PS-1616
N1LR-201606DK	16/16	20.00" 16.00" 6.625"	5.987"	PP-2016	P2-2016	PS-2016
N1LR-242006DK	16/14	24.00" x 20.00" x 6.625"	5.987"	PP-2420	P2-2420	PS-2420
N1LR-242406DK	16/14	24.00" x 24.00" x 6.625"	5.987"	PP-2424	P2-2424	PS-2424
N1LR-302406DK	16/14	30.00" x 24.00" x 6.625"	5.987"	PP-3024	P2-3024	PS-3024
N1LR-362406DK	14/14	36.00" x 24.00" x 6.625"	5.987"	PP-3624	P2-3624	PS-3624
N1LR-121208K	16/16	12.00" x 12.00" x 8.00"	7.362"	PP-1212	P2-1212	PS-1212
N1LR-141208K	16/16	14.00" x 12.00" x 8.00"	7.362"	PP-1412	P2-1412	PS-1412
N1LR-242408DK	16/14	24.00" x 24.00" x 8.625"	7.987"	PP-2424	P2-2424	PS-2424
N1LR-302408DK	16/14	30.00" x 24.00" x 8.625"	7.987"	PP-3024	P2-3024	PS-3024
N1LR-362408DK	14/14	36.00" x 24.00" x 8.625"	7.987"	PP-3624	P2-3624	PS-3624
N1LR-242009K	16/14	24.00" x 20.00" x 9.375"	8.737"	PP-2420	P2-2420	PS-2420
N1LR-242409K	16/14	24.00" x 24.00" x 9.375"	8.737"	PP-2424	P2-2424	PS-2424
N1LR-362409K	14/14	36.00" x 24.00" x 9.375"	8.737"	PP-3624	P2-3624	PS-3624
N1LR-353009K	14/14	35.00" x 30.00" x 9.375"	8.737"	PP-3530	P2-3530	PS-3530
N1LR-423609K	14/14	42.00" x 36.00" x 9.375"	8.737"	PP-4236	P2-4236	PS-4236
N1LR-493009K	14/14	49.25" x 30.00" x 9.375"	8.737"	PP-4930	P2-4930	PS-4930
N1LR-242412K	16/14	24.00" x 24.00" x 12.625"	11.987"	PP-2424	P2-2424	PS-2424
N1LR-302412K	14/14	30.00" x 24.00" x 12.625"	11.987"	PP-3024	P2-3024	PS-3024
N1LR-362412K	14/14	36.00" x 24.00" x 12.625"	11.987"	PP-3624	P2-3624	PS-3624

NOTE: REPLACE THE LR IN THE PART NUMBER WITH LL FOR LEFT OPENING DOORS WITH LIFT-OFF HINGES.

Applications: Designed for indoor applications which do not have oil-tight and dust-tight requirements.

Construction:
* Steel fabricated doors and enclosures
* Doors secured with lift-off hinges and keyed quarter turn latch
* Mounting holes supplied on back of enclosure
* Enclosure/Door design allows doors to be removed
* Standoffs provided for mounting of optional back panels
* Various sizes of knockouts are supplied on all four sides of the enclosure

Finish:
* ANSI-61 gray powder coat
* Optional colors available, please call for details

Accessories:
* Back panels (see reference tables)

PERFORATED BACK PANELS	
CATALOG NUMBER	PANEL SIZE A x B
PP-0806	6.00" x 4.00"
PP-1008	8.00" x 6.00"
PP-1210	10.00" x 8.00"
PP-1212	10.00" x 10.00"
PP-1412	12.00" x 10.00"
PP-1612	14.00" x 10.00"
PP-1616	14.00" x 14.00"
PP-1712	15.375" x 10.75"
PP-1816	16.00" x 14.00"
PP-1820	16.00" x 18.00"
PP-2016	18.00" x 14.00"
PP-2420	22.00" x 18.00"
PP-2424	22.00" x 22.00"
PP-3024	28.00" x 22.00"
PP-3530	33.00" x 28.00"
PP-3624	34.00" x 22.00"
PP-4236**	40.00" x 34.00"
PP-4930**	47.25" x 28.00"

** 12 GA CARBON STEEL

DESCRIPTION:

*14 GAUGE CARBON STEEL (UNLESS OTHERWISE NOTED)
*WHITE POWDER COAT
*FULLY PERFORATED

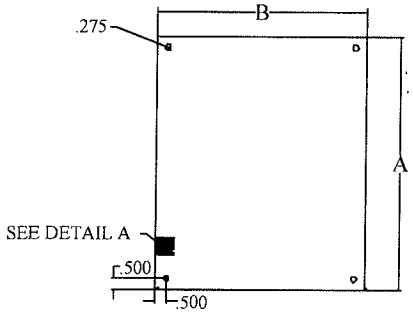

2" ON CENTER BACK PANELS	
CATALOG NUMBER	PANEL SIZE A x B
P2-0806	6.00" x 4.00"
P2-1008	8.00" x 6.00"
P2-1210	10.00" x 8.00"
P2-1212	10.00" x 10.00"
P2-1412	12.00" x 10.00"
P2-1612	14.00" x 10.00"
P2-1616	14.00" x 14.00"
P2-1712	15.375" x 10.75"
P2-1816	16.00" x 14.00"
P2-1820	16.00" x 18.00"
P2-2016	18.00" x 14.00"
P2-2420	22.00" x 18.00"
P2-2424	22.00" x 22.00"
P2-3024	28.00" x 22.00"
P2-3530	33.00" x 28.00"
P2-3624	34.00" x 22.00"
P2-4236**	40.00" x 34.00"
P2-4930**	47.25" x 28.00"

** 12 GA CARBON STEEL

DESCRIPTION:

*14 GAUGE CARBON STEEL (UNLESS OTHERWISE NOTED)
*WHITE POWDER COAT
*HOLES SPACED 2" ON CENTER

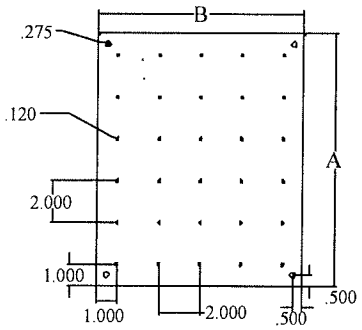

SOLID BACK PANELS	
CATALOG NUMBER	PANEL SIZE A x B
PS-0806	6.00" x 4.00"
PS-1008	8.00" x 6.00"
PS-1210	10.00" x 8.00"
PS-1212	10.00" x 10.00"
PS-1412	12.00" x 10.00"
PS-1612	14.00" x 10.00"
PS-1616	14.00" x 14.00"
PS-1712	15.375" x 10.75"
PS-1816	16.00" x 14.00"
PS-1820	16.00" x 18.00"
PS-2016	18.00" x 14.00"
PS-2420	22.00" x 18.00"
PS-2424	22.00" x 22.00"
PS-3024	28.00" x 22.00"
PS-3530	33.00" x 28.00"
PS-3624	34.00" x 22.00"
PS-4236**	40.00" x 34.00"
PS-4930**	47.25" x 28.00"

** 12 GA CARBON STEEL

DESCRIPTION:

*14 GAUGE CARBON STEEL (UNLESS OTHERWISE NOTED)
*WHITE POWDER COAT

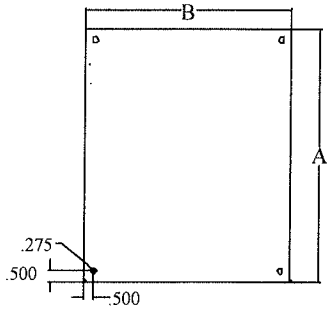

DETAIL A

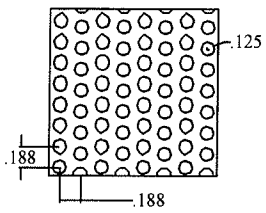

TYPE 1 ENCLOSURE WITH SCREW COVER

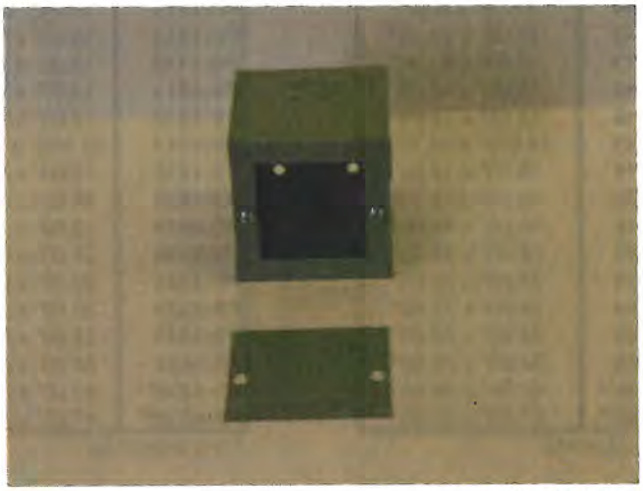

Industry Standards
UL 50, Type 1
Nema Type 1

UL File E235575

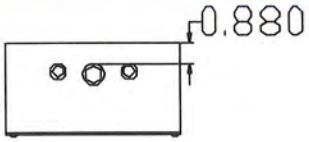

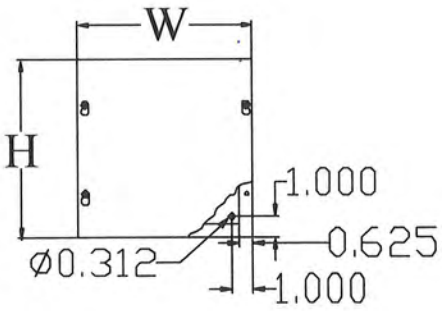

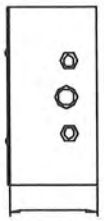

INSIDE

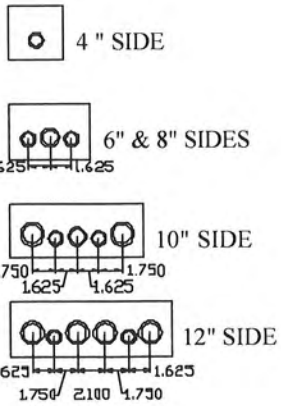

KNOCKOUT PATTERNS
A- ½" TO ¾"
B- ¾" TO 1"
C- 1" TO 1-¼"

TYPE 1 ENCLOSURE WITH SCREW COVER		
CATALOG NUMBER	BODY/DOOR STEEL GAUGE	ENCLOSURE SIZE H x W x D
SC-040404	16/16	4.00" x 4.00" x 4.00"
SC-060604	16/16	6.00" x 6.00" x 4.00"
SC-080804	16/16	8.00" x 8.00" x 4.00"
SC-101004	16/16	10.00" x 10.00" x 4.00"
SC-121204	16/16	12.00" x 12.00" x 4.00"
SC-060606	16/16	6.00" x 6.00" x 6.00"
SC-080806	16/16	8.00" x 8.00" x 6.00"
SC-101006	16/16	10.00" x 10.00" x 6.00"
SC-121206	16/16	12.00" x 12.00" x 6.00"

Applications: Designed for use as a junction box and pull box in general indoor applications

Construction:
* Steel fabricated enclosure and cover
* Mounting holes supplied on back of enclosure
* Various sizes of knockouts are supplied on all four sides of the enclosure
* Cover design allows for removal without fully removing screws

Finish:
* ANSI-61 gray powder coat
* Optional colors available, please call for details

F-1000 Series
Turbine Flow Meters

Chilled Water • Hot Water • Domestic Water

ONICON's F-1000 Series is a family of insertion and inline turbine flow meters that provide accurate measurement over a wide flow range in pipe sizes ranging from ¾" to 72" in diameter. They are an excellent value when measuring water flow in clean closed loop systems.

ONICON
Flow and Energy Measurement

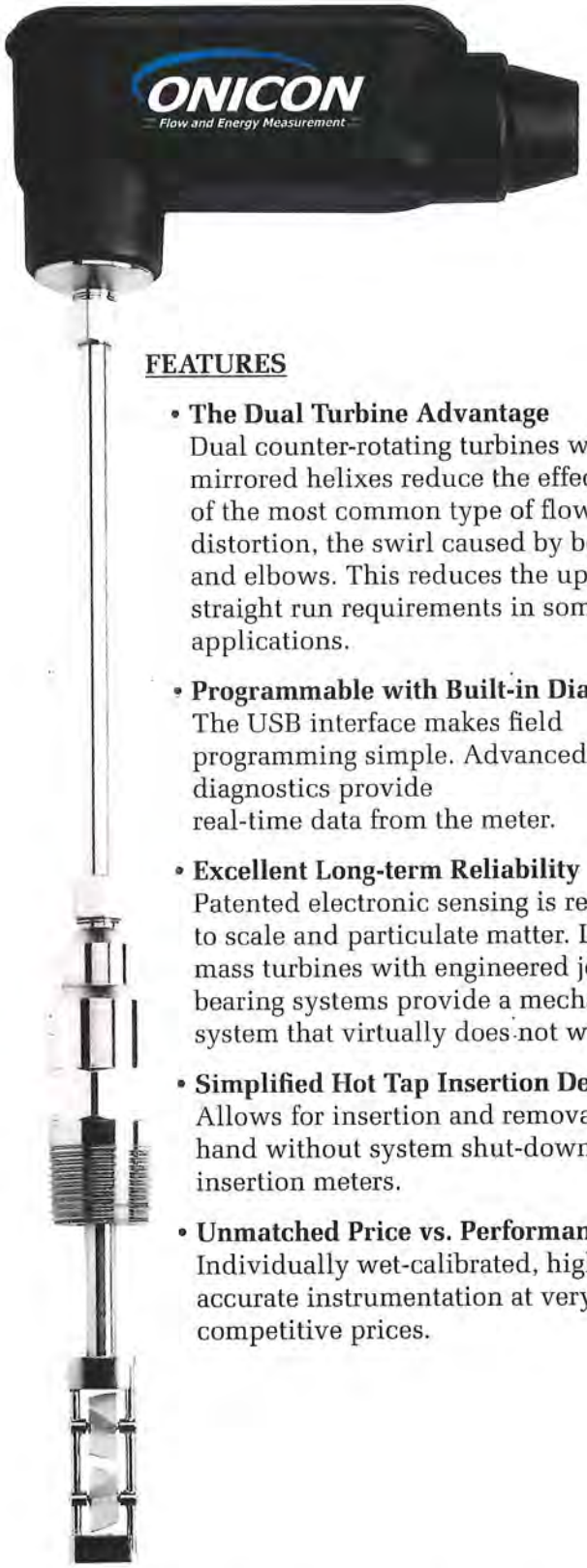

FEATURES

- **The Dual Turbine Advantage**
  Dual counter-rotating turbines with mirrored helixes reduce the effects of the most common type of flow distortion, the swirl caused by bends and elbows. This reduces the upstream straight run requirements in some applications.
- **Programmable with Built-in Diagnostics**
  The USB interface makes field programming simple. Advanced diagnostics provide real-time data from the meter.
- **Excellent Long-term Reliability**
  Patented electronic sensing is resistant to scale and particulate matter. Low mass turbines with engineered jewel bearing systems provide a mechanical system that virtually does not wear.
- **Simplified Hot Tap Insertion Design**
  Allows for insertion and removal by hand without system shut-down for insertion meters.
- **Unmatched Price vs. Performance**
  Individually wet-calibrated, highly accurate instrumentation at very competitive prices.

DESCRIPTION

ONICON's F-1000 Series is a family of insertion and inline style turbine meters flow meters that provide accurate, reliable flow measurement in a variety of applications. The F-1000 Series meters are suitable for use in pipes ranging in size from ¾ to 72" in diameter. Each model utilizes ONICON's patented electronic turbine rotation sensing system and unique low mass turbine design that is accurate over wide flow ranges with excellent low flow measurement capability.

THREE DIFFERENT STYLES

- F-1100 single turbine insertion meters
  Suitable for use in 1¼ - 72" pipes
- F-1200 dual turbine insertion meters
  Suitable for use in 2½ - 72" pipes
- F-11XX single turbine inline meters
  Available as ¾ and 1" meters.

APPLICATIONS

- Chilled water or hot water & water/glycol solutions for HVAC
- Domestic/municipal water
- Clean process water

CALIBRATION

Every F-1000 series meter is wet-calibrated using N.I.S.T.[1] traceable standards. A certificate of calibration is provided with each meter.

Axially mounted turbines riding on sapphire bearings virtually eliminate the mechanical load on the tungsten carbide shaft on which they ride.

[1] - National Institute of Standards and Technology

11451 Belcher Road South, Largo, FL 33773 • USA • Tel +1 (727) 447-6140 • Fax +1 (727) 442-5699
www.onicon.com • sales@onicon.com

THREE DIFFERENT OUTPUT VERSIONS

Frequency & Scaled Pulse/Alarm Outputs
This version provides a high-resolution frequency output and a scaled pulse output for totalizing flow. The frequency output allows for connection to ONICON Btu meters or displays. The scaled pulse output may also be configured as an alarm.

Frequency, Analog & Scaled Pulse/Alarm Outputs
This version provides a high-resolution frequency output, an analog output for flow rate and a scaled pulse output for totalizing flow. The frequency output allows for connection to ONICON Btu meters or displays. The scaled pulse output may also be configured as an alarm.

Frequency, Isolated Analog & Scaled Pulse/Alarm Outputs
This version provides a high-resolution frequency output, an isolated analog output for flow rate and a scaled pulse output for totalizing flow. The frequency output allows for connection to ONICON Btu meters or displays. The scaled pulse output may also be configured as an alarm.

OPERATING RANGE FOR COMMON PIPE SIZES
0.17 TO 20 ft/s
±2% accuracy begins at 0.4 ft/s

Pipe Size (Inches)	Flow Rate (GPM)
¾	0.4 - 38
1	0.4 - 38
1 ¼	0.8 - 95
1 ½	1 - 130
2	2 - 210
2½	2.5 - 230
3	4 - 460
4	8 - 800
6	15 - 1,800
8	26 - 3,100
10	42 - 4,900
12	60 - 7,050
14	72 - 8,600
16	98 - 11,400
18	120 - 14,600
20	150 - 18,100
24	230 - 26,500
30	360 - 41,900
36	510 - 60,900

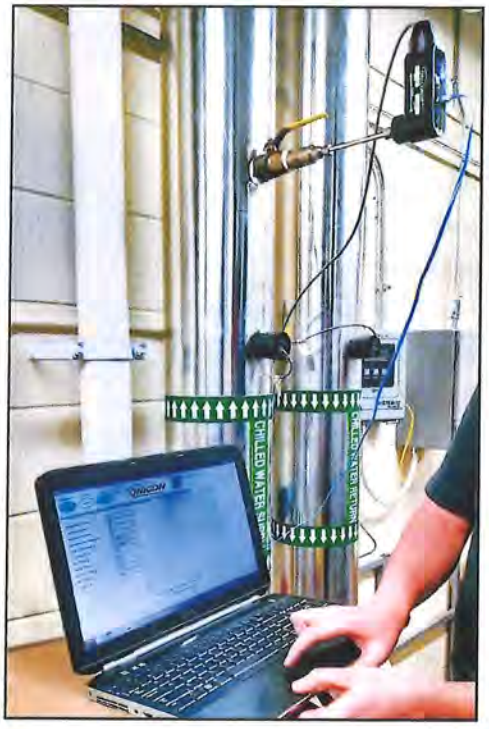

Utility software available allows for programming and field diagnostics.

Inline meters are provided with meter couplings. Couplings are available with NPT or copper sweat process connections.

11451 Belcher Road South, Largo, FL 33773 • USA • Tel +1 (727) 447-6140 • Fax +1 (727) 442-5699
www.onicon.com • sales@onicon.com

GENERAL SPECIFICATIONS

ACCURACY
± 0.5% of reading at calibrated velocity
Insertion: ± 1% of reading from 3 to 30 ft/s (10:1 range)
± 2% of reading from 0.4 to 20 ft/s (50:1 range)
Inline: ± 2% of reading from 0.8 to 38 GPM (50:1 range)

SENSING METHOD
Electronic impedance sensing (non-magnetic and non-photoelectric)

PIPE SIZE RANGE
Insertion: 1¼ through 72" nominal diameter
Inline: Threaded or sweat union fittings - ¾ or 1"

SUPPLY VOLTAGE
24 ±4 V AC/DC at 100 mA

LIQUID TEMPERATURE RANGE
Medium Temp: 150° F continuous, 200° F peak
High Temp: 280° F continuous, 300° F peak
Meters operating above 250° F require 316 SS construction option

AMBIENT TEMPERATURE RANGE
-5° to 160° F (-20° to 70° C)

OPERATING PRESSURE
400 PSI maximum

PRESSURE DROP
Insertion: Less than 1 PSI at 20 ft/s in 1½" pipe, decreasing in larger pipes and lower velocities
Inline: 3 PSI at maximum flow rate

MATERIAL
Wetted material:
Electroless nickel plated brass stem
Optional: 316 stainless steel [1]
Optional: NSF/ANSI 61/372 version* [1]

OUTPUT SIGNALS AVAILABLE
Frequency Output
0-15 V peak pulse, programmable max Hz
Scaled Pulse / Alarm Output
Isolated solid state dry contact
Contact rating: 100 mA, 50 V
Contact duration: Field programmable; 50, 100, 500 or 1000 ms
Analog Output (non-isolated)
Signal type: 4-20 mA, 0-10 V or 0-5 V (jumper selectable)
Output range: Field programmable
Isolated Analog Output
Signal type: 4-20 mA, 0-10 V or 0-5 V (jumper selectable)
Output range: Field programmable

ELECTRONICS ENCLOSURE
NEMA4 enclosure
Optional: Submersible enclosure

ELECTRICAL CONNECTIONS
Standard: 10' of cable with ½" NPT conduit connection
Optional: Indoor DIN connector with 10' of plenum rated cable

[1] Insertion meters only

* CLASSIFIED c UL us WATER QUALITY — TURBINE INSERTION FLOW METER NSF/ANSI 61 <MH60590> ALSO CLASSIFIED IN ACCORDANCE WITH NSF/ANSI 372

METER ORDERING INFORMATION

Meter Model Number Coding = F-1ABB-CC- EFGH

A = Number of Turbines
1 = Single Turbine
2 = Dual Turbine

BB = Meter Type
00 = Insertion
34 = ¾" Inline
01 = 1" Inline

CC = Outputs
00 = Freq. and Scaled Pulse
10 = Freq., analog and Scaled Pulse
11 = Freq., Iso. Analog, and Scaled Pulse

A1 = 1.25 - 2.5" (F-1100 Only)
B2 = 2.5 – 4.0" (F-1100 Only)
C3 = 2.5 - 10"
D4 = 2.5 - 16"
E5 = 2.5 - 22"
F6 = 2.5 - 72"
00 = Inline

E= Wetted Materials
1 = Electroless Ni Plated Brass
2 = 316 SS
3 = Bronze Body, Inline

F= Electronics Enclosure
2 = NEMA 4 Weathertight Enclosure
3 = NEMA 6 Submersible Enclosure

G= Wiring Connection
2 = 10' PVC Jacketed Cable, Pig Tail with ½" Conduit Adapter
5 = 10' Plenum Rated Cable, DIN Connector
6 = 25' PVC Jacketed Cable, Pig Tail with ½" Conduit Adapter
7 = 10' Submersible Cable with Connector

H = Process Adapter
1 = 1" NPT Adapter, Medium Temperature (Temp. </= 150° F)
2 = 1" NPT Adapter, High Temperature (Temp. </= 280° F)
3 = 1" NPT Adapter, NSF Rated for Domestic Water
9 = Inline, coupling adapters based on pipe material

11451 Belcher Road South, Largo, FL 33773 • USA • Tel +1 (727) 447-6140 • Fax +1 (727) 442-5699
www.onicon.com • sales@onicon.com

data sheet

JACE® 8000 controller

PRODUCT DEFINITION

The JACE 8000 is a compact, embedded IoT (Internet of Things) controller and server platform for connecting multiple and diverse devices and sub-systems. With Internet connectivity and Web-serving capability, the JACE 8000 controller provides integrated control, supervision, data logging, alarming, scheduling and network management. It streams data and rich graphical displays to a standard Web browser via an Ethernet or wireless LAN, or remotely over the Internet.

The licensing model for the JACE 8000 controller is simplified and features standard drivers along with optional IO and field bus expansion modules for ultimate flexibility and expandability. The JACE 8000 controller operates with Niagara 4, the latest version of the Niagara Framework®, for optimum performance. In larger facilities, multi-building applications and large-scale control system integrations, Niagara 4 Supervisors can be used with JACE 8000 controllers to aggregate information, including real-time data, history and alarms, to create a single, unified application.

HARDWARE SPECIFICATIONS

TI AM3352: 1000MHz ARM* Cortex™-A8

1GB DDR3 SDRAM

Removable micro-SD card with 4GB flash total storage/2GB user storage

Wi-Fi (Client or WAP)
- *IEEE802.11a/b/g/n*
- *IEEE802.11n HT20 @ 2.4GHz*
- *IEEE802.11n HT20/HT40 @ 5GHz*
- *Configurable radio (Off, WAP, or Client)*
- *WPAPSK/WPA2PSK supported*

USB type A connector
- *Back-up and restore support*

(2) isolated RS-485 with selectable bias and termination

(2) 10/100MB Ethernet ports

Secure boot

24VAC/DC power supply

Runs Niagara 4.1 and later

Real time clock

Batteryless

powered by niagara framework®

EXPANSION MODULE AND IO CONFIGURATIONS

MAXIMUM EXPANSION MODULES SUPPORTED	MAXIMUM IO MODULES SUPPORTED
NPB-8000-LON: 4	T-IO-16-485: 16
NPB-8000-232: 4	
NPB-8000-2X-485: 2	

MAXIMUM COMBINATIONS

EXPANSION 1	EXPANSION 2	EXPANSION 3	EXPANSION 4
232 or LON	232 or LON	232 or LON	232 or LON
485 485	232 or LON	232 or LON	232 or LON
485 485	485 485	232 or LON	
485 485	485 485		

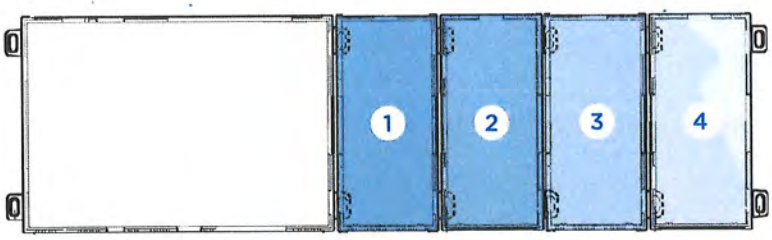

JACE® 8000 CONTROLLER MOUNTING & DIMENSIONS

1. JACE 8000 controller. Allow at least 1.5" (38mm) clearance around all sides and minimum 3" (76mm) at bottom for Wi-Fi antenna
2. Expansion module. Up to four (4) may be used. See "Expansion Module and IO Configurations"
3. Distances between center of tabs from one unit to another unit

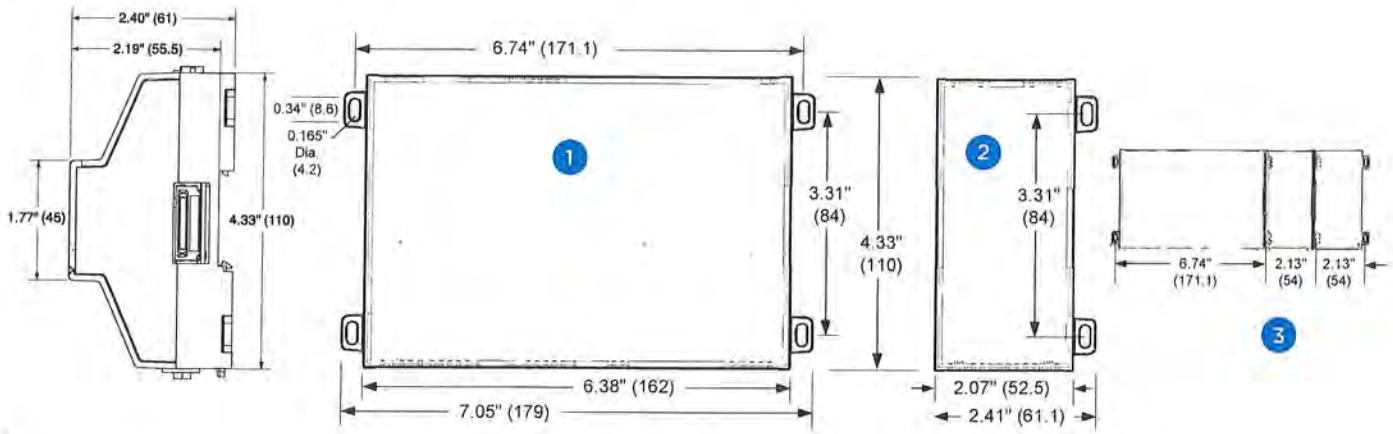

Compatible with (DIN43880) enclosures
Suitable for mounting to a panel or to an EN50022 standard 35mm rail

AGENCY CERTIFICATIONS

- UL 916
- CE EN 61326-1
- FCC Part 15 Subpart B, Class B
- FCC Part 15 Subpart C
- C-UL listed to Canadian Standards Association (CSA) C22.2 No. 205-M1983 "Signal Equipment"
- 1999/5/EC R&TTE Directive
- CCC
- SRRC
- RSS
- ROHS

ENVIRONMENTAL SPECIFICATIONS

- **Operating temperature:** -20–60°C
- **Storage temperature:** -40–85°C
- **Humidity:** 5%–95% — Non condensing
- **Shipping & vibration:** ASTM D4169, Assurance Level II
- **MTTF:** 10 years+

TRIDIUM

ORDERING INFORMATION

Part number	Description
JACE-8000	Base unit includes two isolated RS485 ports, two 10/100MB Ethernet ports, USB Backup & Restore and Wi-Fi connectivity
JACE-8000-DEMO	Base unit includes two isolated RS485 ports, two 10/100MB Ethernet ports, USB Backup & Restore, Wi-Fi connectivity, all available Tridium drivers and a 500 device license. Hardware Accessories purchased separately
NC-8005	Up to 5 devices/250 point core
NC-8010	Up to 10 devices/500 point core
NC-8025	Up to 25 devices/1,250 point core
NC-8100	Up to 100 devices/5,000 point core
NC-8200	Up to 200 devices/10,000 point core
DEVICE-10	Up to 10 devices/500 point upgrade (can be purchased during initial licensing)
DEVICE-25	Up to 25 devices/1,250 point upgrade (can be purchased during initial licensing)
DEVICE-50	Up to 50 devices/2,500 point upgrade (can be purchased during initial licensing)
DEVICE-UP-10	Up to 10 devices/500 point upgrade (can be purchased post initial licensing)
DEVICE-UP-25	Up to 25 devices/1,250 point upgrade (can be purchased post initial licensing)
DEVICE-UP-50	Up to 50 devices/2,500 point upgrade (can be purchased post initial licensing)
JACE-8000-AX	Enables JACE® 8000 controller to run Niagara AX (3.8U). 3.8U Build with JACE 8000 controller support
NPB-8000-2X-485	JACE 8000 controller — add on dual port RS-485 module
NPB-8000-LON	JACE 8000 controller — add on single port LON FTT10A module
NPB-8000-232	JACE 8000 controller — add on single port RS-232 module
WPM-8000	Universal power supply for JACE 8000 controller
T-IO-16-485	Remote IO module, compatible with the JACE 8000 controller. Communication using RS 485, maximum IO supported T-IO-16-485 modules: 16
T-NPB-PWR	24V power supply for T-IO-16-485
T-NPB-PWR-UN	Universal power supply for T-IO-16-485

*All NC-8XXX parts include a Niagara 4 license and Tridium's standard driver suite. Please see Tridium standard driver suite documentation for more details.

The JACE 8000 controller is available through a wide variety of original equipment manufacturers. Our open distribution business model and open protocol support allow a vendor-neutral application compatible with devices and systems throughout the world.

TRIDIUM 804.747.4771 Corporate HQ / 877.305.1745 Customer Support tridium.com

Copyright © 2015 Tridium Inc. All rights reserved. Intel and Xeon are trademarks of Intel Corporation in the U.S. and/or other countries.

Information and/or specifications published here are current as of the date of publication of this document. Tridium, Inc. reserves the right to change or modify specifications without prior notice. The latest product specifications can be found by contacting our corporate headquarters, Richmond, Virginia. Products or features contained herein may be covered by one or more U.S. or foreign patents. This document may be copied only as expressly authorized by Tridium in writing. It may not otherwise, in whole or in part, be copied, photocopied, reproduced, translated, or reduced to any electronic medium or machine-readable form.

2015-0013

MNB-70 BACnet Zone Controller

SPECIFICATIONS

HARDWARE

Dimensions
3-5/8 H x 5 W x 1-19/32 D in
(92 x 127 x 41 mm).

Enclosure
Conforms to NEMA-1. Meets UL 94-5VA flammability ratings for plenum application use.

Mounting
Panel mount.

Power Supply Input
20.4 to 30 Vac, 50/60 Hz.

Power Consumption
15 VA at 24 Vac plus DO loads.

AGENCY LISTINGS

US
UL 916, File #E71385 Category PAZX FCC Part 15, Class A.

Canadian
UL Listed to Canadian Safety Standards (CAN/CSA 22.2).

Australian
Meets requirements to bear the C-Tick Mark.

BTL Listing
B-ASC

European Community
EMC Directive 89/336/EEC
EN61326

BACnet Zone Controller

The TAC I/A Series® MicroNet BACnet Zone Controller is an interoperable controller with native BACnet MS/TP communications support. The controller features: three universal inputs; three digital (Triac) outputs; one universal output; Sensor Link (S-Link) support; LED status indication; and an "I-Am" button.

When programmed using WorkPlace Tech Tool, the Zone Controller provides a wide range of control strategies for applications such as unit heaters, cabinet heaters, fan coil units, small unit ventilators, heat pumps, and single/dual loop control strategies.

The MicroNet BACnet Zone Controller can function either in a standalone mode or as part of a BACnet building automation system (BAS) network.

AMBIENT LIMITS

Operating Temperature
32 to 131 °F (0 to 55 °C).

Shipping and Storage Temperature
-40 to 160 °F (-40 to 71 °C).

Humidity
5 to 95% non-condensing.

WIRING TERMINALS

Fixed Screw terminals
single AWG #14 (2.08 mm²) wire or up to two AWG #18 (0.823 mm²) or smaller wires.

INPUTS FROM MN-SX MICRONET™ SENSOR

Space Temperature
32 to 122 °F (0 to 50 °C).

Space Humidity
5 to 95% RH, non-condensing.

Local Setpoint
Adjustable within limits set by application programming tool.

Override Pushbutton
For standalone occupancy control or occupancy override.

Specifications continued on next page.

Schneider Electric

Specifications continued from first page.

Fan Operation and Speed Mode
On/off, speed (low/medium/high), or auto.

System Mode
Heat, cool, off, or auto.

Emergency Heat
Enable or disable.

UNIVERSAL INPUTS (3)
Universal Input characteristics are software-configured to respond to one of the following input types:

10 k ohm Thermistor with 11 k ohm Shunt Resistor
Sensor operating range -40 to 250 °F (-40 to 121 °C), TAC model TSMN-57011-850, TS-5700-850 series, or equivalent.

1 k ohm Balco
-40 to 250 °F (-40 to 121 °C), TAC model TSMN-81011, TS-8000 series, or equivalent.

1 k ohm Platinum
-40 to 240 °F (-40 to 116 °C), TAC model TSMN-58011, TS-5800 series, or equivalent.

1 k ohm Resistive
0 to 1500 ohms.

10 k ohm Resistive
0 to 10.5 k ohms.

Analog Voltage
Range 0 to 5 Vdc.

Analog Current
Range 0 to 20 mA, requires external 250 ohm shunt resistor (AD-8969-202).

Digital
Dry switched contact; detection of closed switch requires less than 300 ohms resistance; detection of open switch requires more than 2.5 k ohms.

Standard Pulse Input
Minimum Rate
1 pulse per 4 minutes.

Maximum Rate
1 pulse per second.

DIGITAL OUTPUTS – TRIAC (3)

DO1 plus DO2 Rating
24 VA total at 24 Vac, 50/60 Hz, high side switching.

DO3 Rating
12 VA at 24 Vac, 50/60 Hz, high side switching

UNIVERSAL OUTPUT (1)

0 to 20 mA
Output load from 80 to 550 ohms.

0 to 10 V
With external 500 ohms, 1/2 W, 1% resistor.

Capable of Driving Functional Devices
RIBUI1C Relay
UO configured for 0 to 20 mAdc, no external resistor.

MODEL

Model	Inputs and Outputs		
	UI	UO	DO (Triac)
MNB-70	3	1	3

OPTIONS

MNA-ELO-1	TAC MicroNet enclosure, used if wiring to flexible conduit is required
S-Link Sensors	Temperature and humidity wall sensors with digital communication
TSMN Series	Room temperature sensors

© 2012 Schneider Electric. All rights reserved.

FEATURES

- The MicroNet BACnet Zone Controller's sequence of operation and BACnet image are fully programmable using WorkPlace Tech Tool. The controller can be applied to all common zone HVAC applications.
- Capability to function in standalone mode or as part of a BACnet building automation network.
- Integral MS/TP jack for direct connection of PC with WorkPlace Tech Tool.
- DIP switch addressable.
- Service pin button for BACnet "I am" message broadcast.
- Isolated EIA-485 transceiver for MS/TP communications.
- MS/TP baud rate selection from 9.6 up to 76.8 kbaud.
- LED indication of MS/TP communication activity and controller status.
- Firmware upgradeable over the network.

ZONE CONTROLLER TERMINALS

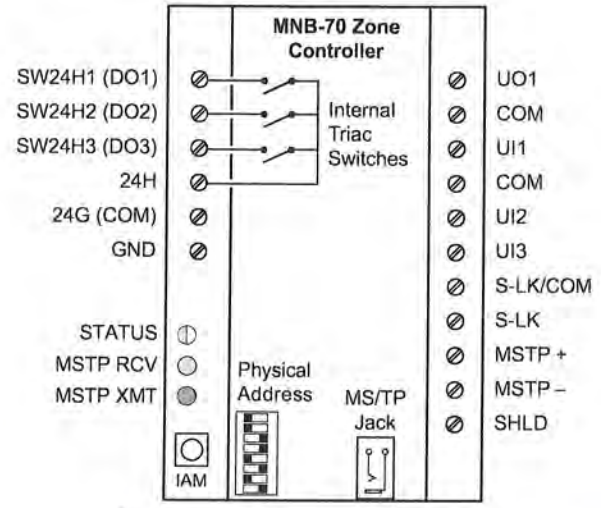

COMMUNICATIONS

BACnet Networks

The MicroNet BACnet Zone Controller incorporates an isolated EIA-485 transceiver for BACnet MS/TP communications at 9.6 up to 76.8 kbaud using standard MS/TP wiring methods. Up to 128 TAC MicroNet BACnet controllers can be connected to an MS/TP sub-net without repeaters.

S-Link

The Sensor Link (S-Link) communications wiring provides power and a communication interface for one MN-Sx TAC I/A Series MicroNet sensor. The various MN-Sx sensors can provide room temperature, room humidity, setpoint adjustment, and occupancy override. This connection uses two-wire, unshielded cable and is not polarity sensitive. Maximum S-Link bus length is 200 ft (61 m).

BACNET COMPLIANCE

BACnet Application Specific Controller (B-ASC).

BACnet is a registered trademark of ASHRAE. ASHRAE does not endorse, approve, or test products for compliance with ASHRAE standards. Compliance of listed products to the requirements of ASHRAE Standard 135 is the responsibility of BACnet International (BI). BTL is a regstered trademark of BI.

Schneider Electric 1354 Clifford Avenue, P.O. Box 2940, Loves Park, IL 61132-2940, USA 1-888-444-1311 www.schneider-electric.com/buildings

F-27455-4

May 2012 ptm

© 2012 Schneider Electric. All rights reserved.

ARCHITECTURE

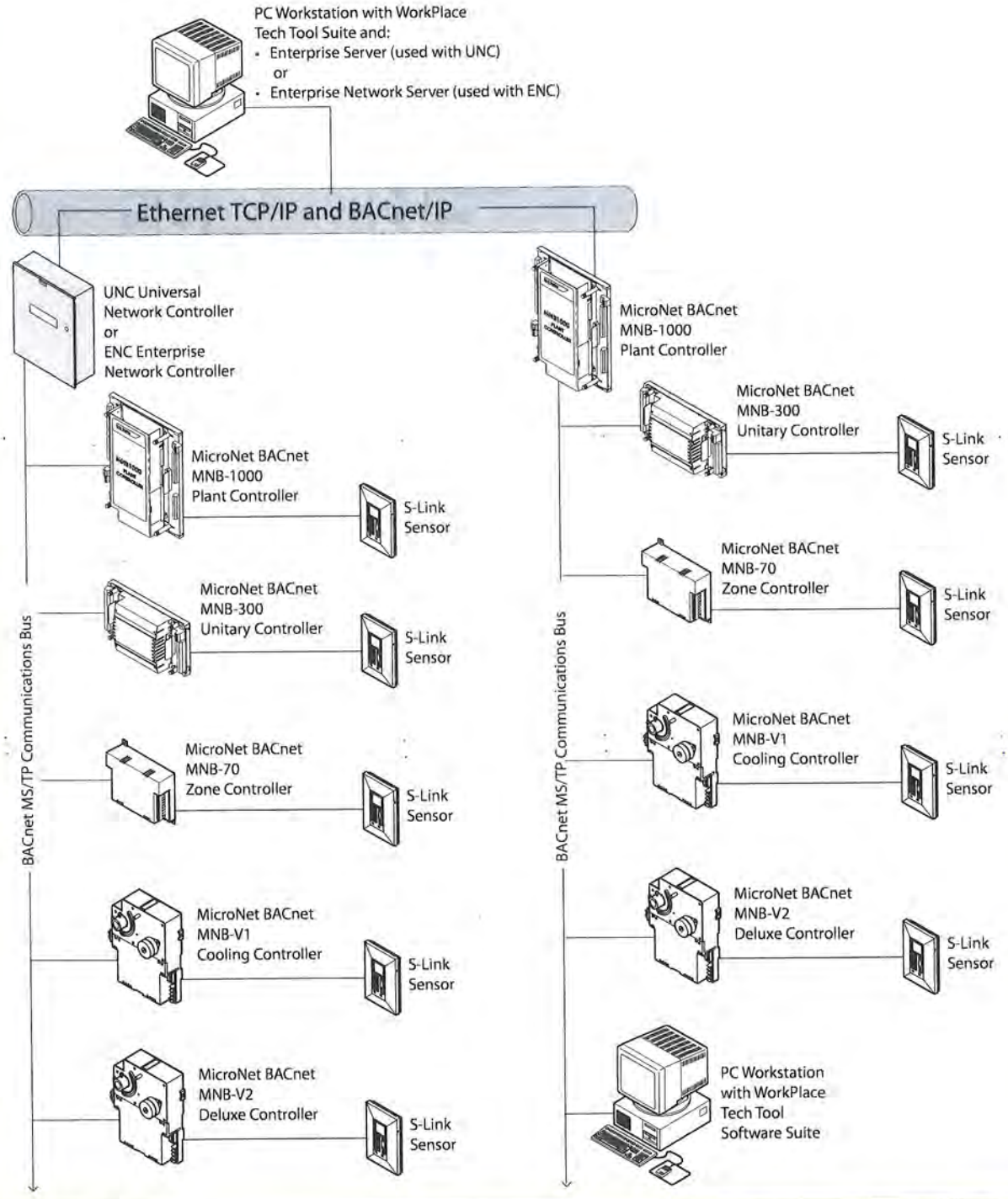

c UL us LISTED

Distributed, manufactured, and sold by Schneider Electric. I/A Series trademarks are owned by Invensys Systems, Inc. and are used on this product under master license from Invensys. Invensys does not manufacture this product or provide any product warranty or support. For service, support, and warranty information, contact Schneider Electric.

All brand names, trademarks and registered trademarks are the property of their respective owners. Information contained within this document is subject to change without notice.

Schneider Electric 1354 Clifford Avenue, P.O. Box 2940, Loves Park, IL 61132-2940, USA 1-888-444-1311 www.schneider-electric.com/buildings

© 2012 Sc[illegible]r Electric. All rights reserved.

MNB-300 BACnet Unitary Controller

I/A Series Micronet MNB-300

The TAC I/A Series™ MicroNet™ MNB-300 BACnet™ Unitary Controller is an interoperable controller with native BACnet MS/TP communications support. The controller features Sensor Link (S-Link) support, LED status and output indication, screw terminal blocks, as well as a panel mount sub-base with removable electronics module.

When programmed using WorkPlace Tech Tool, the Unitary controller provides a wide range of control strategies for packaged rooftop, heat pump, fan coil, unit ventilator, and similar applications.

Stand Alone or Connected

The TAC I/A Series BACnet Unitary Controller can function either in a standalone mode or as part of a BACnet building automation system (BAS) network.

SPECIFICATIONS

HARDWARE

Dimensions
7.0 in. W x 3.94 in. H x 2.19 in. D
(178 mm x 100 mm x 56 mm)

Enclosure
Optional wall-mount enclosure conforms to NEMA-1 requirements.
Cover meets UL94V-0 flammability ratings.

Mounting
Panel mount.

Wiring Terminals
I/O Points
Fixed screw terminals; up to two AWG #14 (2.08 mm²) or smaller wire.
Power and MS/TP
Removable screw terminals; single AWG #14 (2.08 mm²) wire or up to two AWG #18 (0.823 mm²) or smaller wires.

ELECTRICAL

Power Supply Input
20.4 to 30 Vac, 50/60 Hz.

Maximum Power Consumption
16 VA at 24 Vac.

ENVIRONMENT

Operating Temperature
-40 to 140 °F (-40 to 60 °C)

Shipping and Storage Temperature
-40 to 160 °F (-40 to 71 °C)

Humidity
5 to 95% RH, non-condensing

AGENCY LISTINGS

US
FCC Part 15, Class A
UL 916, File #E71385 Category PAZX
UL 864, Category UUKL, File #S5381 Smoke-Control Equipment

Canadian
UL Listed to Canadian Safety Standards (CAN/CSA 22.2)
CUL Listed to Standards ULC/ORD-C100-92 (Smoke Control System Equipment) and CAN-ULC-S527 (Control Units for Fire Alarm Systems)

Australian
Meets requirements to bear the C-Tick Mark

European Community
EMC Directive 89/336/EEC, EN61326

INPUTS AND OUTPUTS

Universal Inputs (6)
Universal Input characteristics are software-configured to respond to one of the following input types:
10k ohm Thermistor w/ 11k ohm Shunt Resistor
Sensor operating range -40 to 250 °F (-40 to 121 °C) range. TSMN-57011-850, TS-5700-850 Series or equivalent.

Specifications continued on next page.

Schneider Electric

Specifications continued from first page.

1k ohm Balco Input

-40 to 250 °F (-40 to 121 °C) range. TSMN-81011, TS-8000 Series or equivalent.

1k ohm Platinum Input

-40 to 240 °F (-40 to 116 °C) range. TSMN-58011, TS-5800 Series or equivalent.

1k ohm Resistive

0 to 1.5k ohms.

10k ohm Resistive

0 to 10.5k ohms.

Analog Voltage

0 to 5 Vdc.

Analog Current

Range 0 to 20 mA, requires an external 250 ohm shunt resistor (AD-8969-202).

Digital Input

Dry switched contact. Detection of closed switch requires less than 300 ohms. Detection of open switch requires more than 2.5k ohms.

Standard Pulse Input (UI1-UI6)

Minimum Rate

1 pulse per 4 minutes.

Maximum Rate

1 pulse per second.

Fast Pulse Input (UI1)

Minimum Rate

1 pulse per 4 minutes.

Maximum Rate

10 pulses per second.

Digital Outputs - Triac (6)

12 VA at 24 Vac, 50/60 Hz, each output individually isolated.

Universal Outputs (3)

Current

0 to 20 mA (output load from 80 to 550 ohms).

Voltage

0 to 10 V (with external 500 ohms, 1/2 W, 1% resistor).

Capability to Drive Functional Devices

RIBUI1C Relay (UO configured for 0 to 20 mAdc, no external resistor).

BACnet is a registered trademark of ASHRAE. ASHRAE does not endorse, approve, or test products for compliance with ASHRAE standards. Compliance of listed products to the requirements of ASHRAE Standard 135 is the responsibility of BACnet International (BI). BTL is a regstered trademark of BI.

COMMUNICATIONS

BACnet Networks

The TAC I/A Series MicroNet BACnet Unitary Controller incorporates an isolated EIA-485 (formerly RS-485) transceiver for BACnet MS/TP communications at 9.6 up to 76.8 kbaud using standard MS/TP wiring methods. Up to 128 TAC I/A Series MicroNet BACnet controllers can be connected to an MS/TP sub-net without repeaters.

S-Link

The Sensor Link (S-Link) communications wiring provides power and a communication interface for one MN-Sx MicroNet sensor. The various MN-Sx sensors can provide room temperature, room humidity, setpoint adjustment, and occupancy override. This connection uses two-wire, unshielded cable and is not polarity sensitive. Maximum S-Link bus length is 200 ft (61 m).

BACnet COMPLIANCE

BACnet Application Specific Controller (B-ASC).

FEATURES

- The TAC I/A Series MicroNet BACnet Unitary Controller's sequence of operation and BACnet image are fully programmable, using WorkPlace Tech Tool. The controllers can be applied to all common unitary HVAC applications.
- Capability to function in standalone mode or as part of a TAC I/A Series building automation network.
- Integral MS/TP jack for direct connection of PC with WorkPlace Tech Tool.
- Removable electronics module mates with panel-mounted subbase.
- Removable terminals for power and communications to facilitate commissioning.
- Optional rugged, NEMA 1 plenum-rated sheet metal enclosure.
- MS/TP DIP switch addressable.
- Service pin button for BACnet "I am" message broadcast.
- Isolated EIA-485 (formerly RS-485) transceiver for MS/TP communications.
- MS/TP baud rate selection from 9.6 up to 76.8 kbaud.
- LED indication of MS/TP communication activity, controller status, and UO and DO state.
- Firmware upgradeable over the network.
- Support for S-Link Sensor.

© 2009 Sc* *ter Electric. All rights reserved.

INPUTS FROM MN-SX I/A SERIES MICRONET SENSORS

Inputs	Description	MN-Sx Sensor
Space Temperature	32 to 122 °F (0 to 50 °C)	MN-S1, MN-S1HT, MN-S2, MN-S2HT, MN-S3, MN-S3HT, MN-S4, MN-S4HT, MN-S4-FCS, MN-S4HT-FCS, MN-S5 and MN-S5HT
Space Humidity	5 to 95% RH, Non-condensing	MN-S1HT, MN-S2HT, MN-S3HT, MN-S4HT, MN-S4HT-FCS, and MN-S5HT
Adjustable Setpoint	Adjustable within limits set by application programming tool	MN-S3, MN-S3HT, MN-S4, MN-S4HT, MN-S4-FCS, MN-S4HT-FCS, MN-S5, and MN-S5HT
Override Pushbutton	For standalone occupancy control or occupancy override	MN-S2, MN-S2HT, MN-S3, MN-S3HT, MN-S4, MN-S4HT, MN-S5 and MN-S5HT
Fan Operation and Speed	Fan mode selection: On/Off, Speed (Low/Medium/High), or Auto	MN-S4, MN-S4HT, MN-S4-FCS, MN-S4HT-FCS, MN-S5, and MN-S5HT
System Mode	System mode selection: Heat, Cool, Off, or Auto	MN-S4, MN-S4HT, MN-S5, and MN-S5HT
Emergency Heat	Emergency heat mode selection: Enable or Disable	MN-S5 and MN-S5HT

MODELS

Part Number	Description	Inputs/Outputs		
		UI	UO	DO (Triac)
MNB-300	TAC I/A Series MicroNet BACnet Unitary Controller	6	3	6

ACCESSORIES

Part Number	Description	Part Number	Description
MNB-300-ENC	Wall-mount enclosure	S-Link Sensors	Temperature and humidity wall sensors with digital communication
MNB-BASE-300	Controller base assembly only		
MNB-CNTLR-300	Controller cover assembly only	TSMN Series	Room temperature sensors

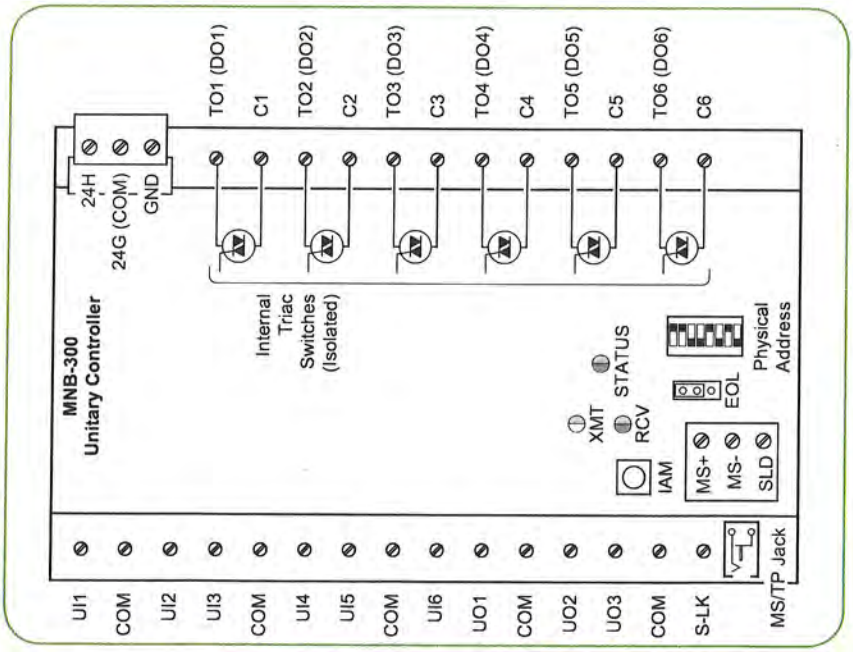

Schneider Electric 1354 Clifford Avenue, P.O. Box 2940, Loves Park, IL 61132-2940, USA 1-888-444-1311 www.schneider-electric.com/buildings

© 2009 Schneider Electric. All rights reserved.

ARCHITECTURE

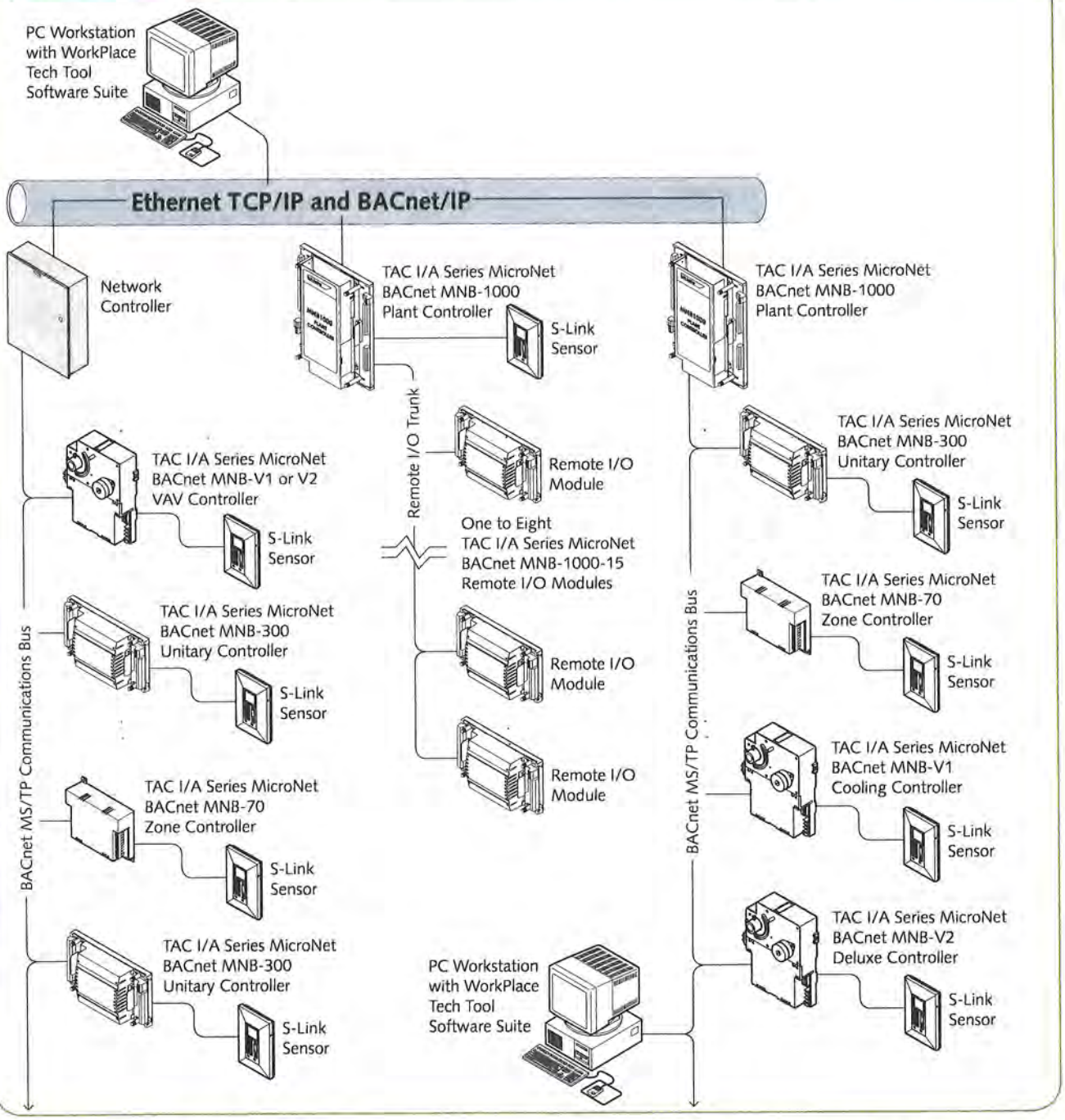

LISTED LISTED SIGNALING

Distributed, manufactured, and sold by Schneider Electric. I/A Series trademarks are owned by Invensys Systems, Inc. and are used on this product under master license from Invensys. Invensys does not manufacture this product or provide any product warranty or support. For service, support, and warranty information, contact Schneider Electric.

On October 1st, 2009, TAC became the Buildings Business of its parent company Schneider Electric. This document reflects the visual identity of Schneider Electric, however there remain references to TAC as a corporate brand in the body copy. As each document is updated, the body copy will be changed to reflect appropriate corporate brand changes.

All brand names, trademarks and registered trademarks are the property of their respective owners. Information contained within this document is subject to change without notice.

Schneider Electric 1354 Clifford Avenue, P.O. Box 2940, Loves Park, IL 61132-2940, USA 1-888-444-1311 www.schneider-electric.com/buildings

© 2009 Sc ter Electric. All rights reserved.

MicroNet BACnet Plant Controller

MicroNet BACnet Plant Controller MNB-1000

The TAC I/A Series™ MicroNet™ BACnet™ Plant Controller is an interoperable controller with native BACnet/IP, BACnet Ethernet, and MS/TP communications support and routing functionality between physical networks. The controller features: Sensor Link (S-Link) support; remote I/O support; LED status and output indication; two Ethernet ports; screw terminal blocks; and a panel-mount subbase with a removable electronics module.

The Plant Controller's sequence of operation and BACnet image are fully programmable using WorkPlace Tech Tool, and can be applied to a wide range of mechanical equipment. Typical applications include central station air handlers, VAV air handlers, and cooling towers.

The MicroNet BACnet Plant Controller can function either in a standalone mode or as part of a BACnet building automation system (BAS) network. The MNB-1000 is BACnet Testing Laboratories (BTL) listed as a BACnet Application Specific Controller (B-ASC).

SPECIFICATIONS

HARDWARE

Dimensions
10-15/16 H x 8-3/8 W x 2-9/32 D in. (278 x 213 x 58 mm).

Enclosure
Optional rugged sheet metal enclosure conforms to NEMA-1.

Mounting
Panel mount.

Power Supply Input
20.4 to 30 Vac, 50/60 Hz.

Power Consumption
50 VA at 24 Vac.

AGENCY LISTINGS

US
FCC Part 15, Class A.
UL 916, File #E71385 Category PAZX
UL 864, Category UUKL, File #S5381 Smoke-Control Equipment

Canadian
UL Listed to Canadian Safety Standards (CAN/CSA 22.2).
CUL Listed to Standards ULC/ORD-C100-92 (Smoke Control System Equipment) and CAN-ULC-S527 (Control Units for Fire Alarm Systems)

Australian
Meets requirements to bear the C-Tick Mark.

European Community
EMC Directive 89/336/EEC
EN61326

AMBIENT LIMITS

Operating Temperature
-40 to 140 °F (-40 to 60 °C).

Shipping and Storage Temperature
-40 to 160 °F (-40 to 71 °C).

Humidity
5 to 95% non-condensing.

WIRING TERMINALS

Remote I/O (IO+, IO-, SLD)
Removable screw terminals; single AWG #14 (2.08 mm^2) wire or up to two AWG #18 (0.823 mm^2) or smaller wires.

MS/TP (MS+, MS-, SLD)
Removable screw terminals; single AWG #14 (2.08 mm^2) wire or up to two AWG #18 (0.823 mm^2) or smaller wires.

I/O Points
Fixed screw terminals; single AWG #14 (2.08 mm^2) wire or up to two AWG #18 (0.823 mm^2) or smaller wires.

Power
Removable screw terminals; up to two AWG #14 (2.08 mm^2) or smaller wires.

Continued on next page.

Schneider Electric

Continued from first page.

INPUTS FROM MN-SX MICRONET SENSOR

Space Temperature
32 to 122 °F (0 to 50 °C).

Space Humidity
5 to 95% RH, non-condensing.

Local Setpoint
Adjustable within limits set by application programming tool.

Fan Operation and Speed Mode
On/off, speed (low/medium/high), or auto.

System Mode
Heat, cool, off, or auto.

Emergency Heat
Enable or disable.

UNIVERSAL INPUTS (12)

Universal Input characteristics are software-configured to respond to one of the following input types:

10k ohm Thermistor with 11k ohm Shunt Resistor
Sensor operating range -40 to 250 °F (-40 to 121 °C), model TSMN-57011-850, TS-5700-850 series, or equivalent.

1k ohm Balco
-40 to 250 °F (-40 to 121 °C), model TSMN-81011, TS-8000 series, or equivalent.

1k ohm Platinum
-40 to 240 °F (-40 to 116 °C), model TSMN-58011, TS-5800 series, or equivalent.

1k ohm Resistive
0 to 1500 ohms.

10k ohm Resistive
0 to 10.5k ohms.

Analog Voltage
Range 0 to 5 Vdc.

Analog Current
Range 0 to 20 mA; requires external 250 ohm shunt resistor (AD-8969-202).

Digital
Dry switched contact; detection of closed switch requires less than 300 ohms resistance; detection of open switch requires more than 2.5k ohms.

DIGITAL INPUTS (4)

Dry Switched Contact
Detection of closed switch requires less than 300 ohms resistance; detection of open switch requires more than 2.5k ohms.

FAST PULSE INPUT (DIGITAL INPUT ONLY)

Minimum Rate
1 pulse per 4 minutes.

Maximum Rate
10 pulses per second.

DIGITAL OUTPUTS – TRIAC (8)

12 VA at 24 Vac, 50/60 Hz, each output individually isolated.

UNIVERSAL OUTPUTS (8)

0 to 20 mA
Output load from 80 to 550 ohms.

0 to 10 V
With external 500 ohms, 1/2 W, 1% resistor.

Capable of Driving Functional Devices RIBU1C Relay
UO configured for 0 to 20 mAdc, no external resistor.

20 VDC OUTPUT

20 Vdc ±10% at 100 mA.

OPTIONS

MNB-1000-ENC
Wall-mount enclosure

MNB-BASE-1000
Controller Base assembly only

MNB-CNTLR-1000
Controller assembly only

MNB-15
Remote I/O Module

S-Link Sensors
Temperature and humidity Wall Sensors with digital communication

TSMN Series
Room Temperature Sensors

MODEL

Part Number	Inputs and Outputs[a]			
	UI	DI	UO	DO (Triac)
MNB-1000	12	4	8	8

a. The I/O point count can be greatly expanded with the addition of one to eight Remote I/O Modules, each of which adds 15 I/O points. Refer to the MNB-1000-15 Remote I/O Module sales data sheet, F-27487.

© 2013 Schneider Electric. All rights reserved.

FEATURES

- The MicroNet BACnet Plant Controller's sequence of operation and BACnet image are fully programmable using WorkPlace Tech Tool.
- Capability to function in standalone mode or as part of a TAC I/A Series building automation network.
- Removable electronics module mates with panel-mounted subbase.
- Removable terminals for power and communications, to facilitate commissioning.
- Integral MS/TP jack for direct connection of PC with WorkPlace Tech Tool Suite.
- Optional rugged, NEMA 1 sheet metal enclosure.
- MS/TP DIP switch addressable.
- Service pin button for BACnet "I am" message broadcast.
- Isolated EIA-485 (formerly RS-485) transceiver for MS/TP communications.
- MS/TP baud rate selection from 9.6 up to 76.8 kbaud.
- LED indication of MS/TP and Ethernet IP communication activity, controller status, DO state, and UO state.
- Application-programmable LED provides on/off indication of a user-defined application parameter.
- Firmware upgradeable over the network.
- 72 hour, battery-backed real time clock.
- BBMD, remote connectivity across subnets.
- Support for Remote I/O Modules and S-Link Sensor.
- IP/Ethernet bridge.
- BACnet router functionality.

COMMUNICATIONS

BACnet Networks

The MicroNet BACnet Plant Controller incorporates a fully functional BACnet router between its 3 fully configurable communications ports.

MS/TP

Isolated EIA-485 (formerly RS-485) transceiver, providing support for up to 128 MS/TP devices communicating at 9.6 up to 76.8 kbaud, using standard MS/TP wiring methods.

Ethernet/IP

Dual 10/100 Ethernet ports with modular RJ-45 jacks. Both ports are set to be an Ethernet Bridge, saving on network wiring.

BACnet Ethernet

Standard BACnet Ethernet communications.

BACnet/IP

Communications choices are Standard BACnet/IP, BBMD, or Foreign Device.

S-Link

The Sensor Link (S-Link) communications wiring provides power and a communication interface for one MN-Sx TAC I/A Series MicroNet sensor. The various MN-Sx sensors can provide room temperature, room humidity, setpoint adjustment, and occupancy override. This connection uses two-wire, unshielded cable and is not polarity sensitive. Maximum S-Link bus length is 200 ft (61 m).

Remote I/O

The remote I/O communications wiring provides an interface for one to eight optional MNB-1000-15 Remote I/O Modules, which can be used to expand upon the Plant Controller's onboard I/O.

BACnet is a registered trademark of ASHRAE®. ASHRAE does not endorse, approve, or test products for compliance with ASHRAE standards. Compliance of listed products to the requirements of ASHRAE Standard 135 is the responsibility of BACnet International (BI). BTL is a registered trademark of BI.

CONTROLLER TERMINALS

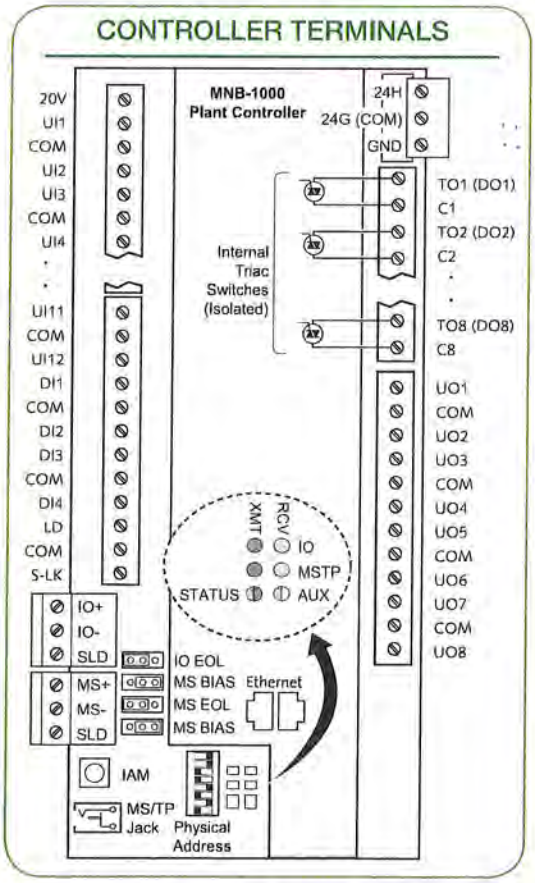

© 2013 Schneider Electric. All rights reserved.

TAC I/A SERIES BACnet TOPOLOGY

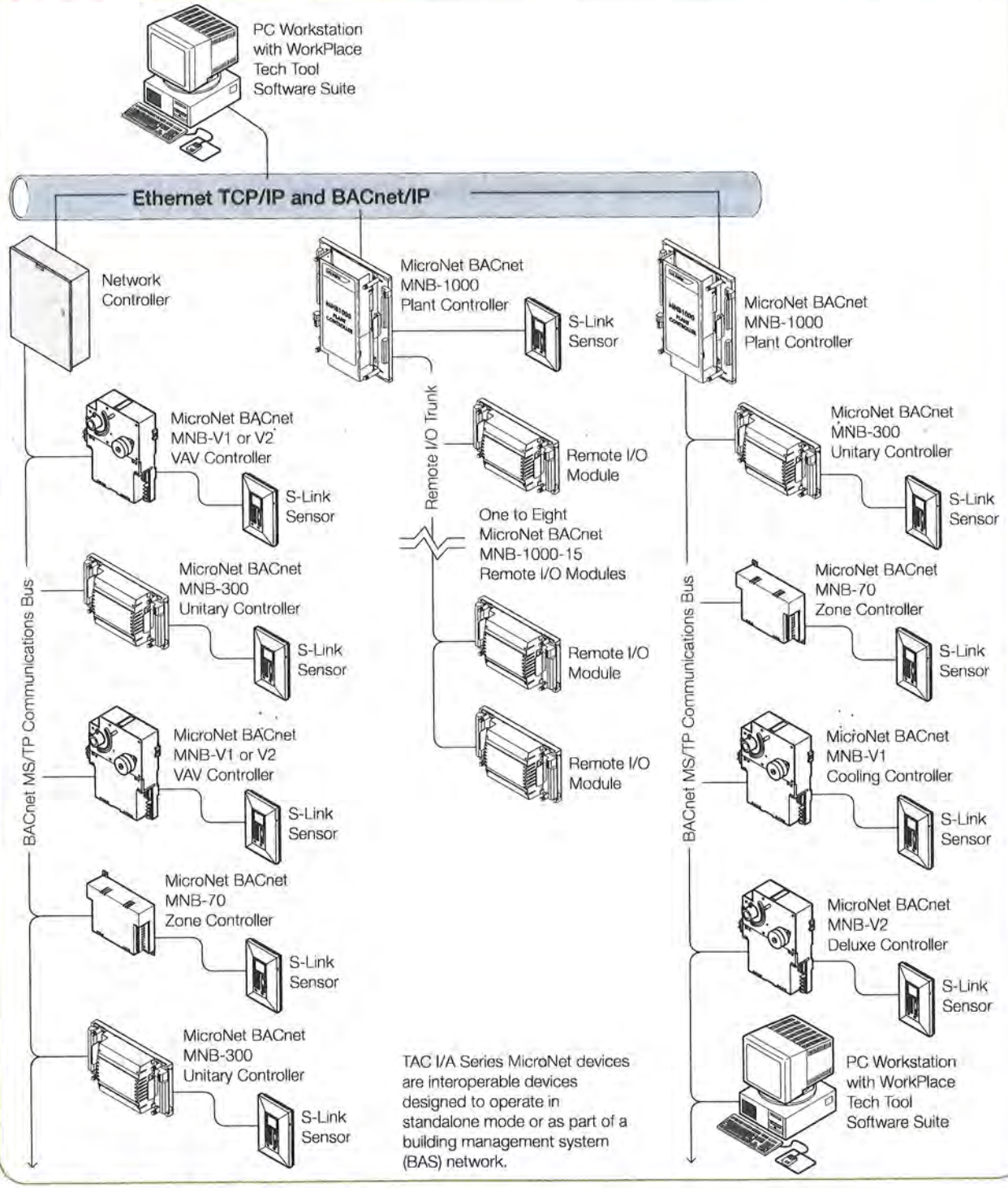

Distributed, manufactured, and sold by Schneider Electric. I/A Series trademarks are owned by Invensys Systems, Inc. and are used on this product under master license from Invensys. Invensys does not manufacture this product or provide any product warranty or support. For service, support, and warranty information, contact Schneider Electric.

All brand names, trademarks and registered trademarks are the property of their respective owners. Information contained within this document is subject to change without notice. All rights reserved.

Schneider Electric 1354 Clifford Avenue, P.O. Box 2940, Loves Park, IL 61132-2940, USA 1-888-444-1311 www.schneider-electric.com

© 2013 Schneider Electric. All rights reserved.

WET TO WET

Differential Pressure Transducer w/ Remote Probes

The A/WPR2 Series Remote Wet to Wet Differential Pressure Transmitter is designed to reduce installation time and provide mounting flexibility, often eliminating the need for additional plumbing. They accurately measure wet media pressures in a variety of applications. Commonly used for monitoring pumps, these devices are also ideal for measuring pressure across filters, heat exchangers and compressors. The A/WPR2's enclosure opens conveniently to allow it to be reconfigured between three additional ranges (see order grid) and outputs of 4 to 20 mA (default), 0 to 5 VDC, or 0 to 10 VDC. The A/WPR2 Series can measure both uni or bi-directional pressure ranges as low as 3 psi and as high as 300 psi, depending on the unit. The A/WPR2 also features a push button auto zero function for remote calibration.

The LCD option will display pressure values for both the High and Low side pressures, a differential pressure value, "OVR" for values over the specified range, "ERROR" for differential pressures out of range, and "ZERO" when the auto-zero is in process.

The A/WPR2 Series is covered by ACI's Five (5) Year Limited Warranty. The warranty can be found in the front of ACI's Sensors & Transmitters catalog, as well as on ACI's web site, www.workaci.com.

SPECIFICATIONS

Supply Voltage	4 to 20 mA Output: 250Ω Load: 16 to 36 VDC | 500Ω Load: 20 to 36 VDC 0 to 5 / 0 to 10 VDC Output: 16 to 36 VDC, 24 VAC +/- 10%
Supply Current	25 mA maximum (current output), 6 mA maximum (voltage outputs)
Differential Pressure Output	2 wire: Linear 4-20 mA DC Current (default), 3 wire: 0-5 VDC; 0-10 VDC (field selectable)
Output Load Resistance	4 to 20 mA: 500 ohms maximum | 0 to 5 / 0 to 10 VDC: 5K ohms minimum
Field Selectable Range/Spans	3, 7.5, 15 & 30 psi (uni and bi-directional) for 30 psi sensors 10, 25, 50 & 100 psi (uni and bi-directional) for 100 psi sensors 30, 75, 150 & 300 psi (uni and bi-directional) for 300 psi sensors
Accuracy	±1.0% FSO (includes linearity, hysteresis and repeatability) | ±1.5% for 0-10 & 0-30 psi ranges
Output Update Rate	1 second
Response Time (0-100% FSO)	8 seconds
Thermal Effects	±2.0% FSO from 32 to 140°F (0-60°C)
Proof Pressure	3X F.S (A/WPR2-30 Series) & (A/WPR2-100 Series) | 2X F.S. (A/WPR2-300 Series)
Burst Pressure	1500 psi
Operating Temperature	Sensors: -30 to 120°C (-22 to 248°F) | Electronics/Housing/Cables: 0 to 75°C (32 to 167°F)
Compensated Temperature Range	32 to 140°F (0 to 60°C)
Operating RH	10 to 90% RH non-condensing
Process Fitting	1/4"-18 NPT Male (304 stainless steel); Pressure Snubber included for light oils/water for WPR2-100
Enclosure Rating	NEMA 4X/IP66
Product Dimensions	Enclosure: (L) 5.10" (W) 3.93" (H) 3.00"

RANGE AND OUTPUT CHART

Series: A/WPR2-30 (Uni-directional)	**Default Uni-directional Range:** 0-30 psi	**Selectable Uni-directional Ranges:** 15, 7.5 & 3 psi
Series: A/WPR2-30 (Bi-directional)	**Selectable Bi-directional Range:** ±30 psi	**Selectable Bi-directional Ranges:** ±15, ±7.5 & ±3 psi
Series: A/WPR2-100 (Uni-directional)	**Default Uni-directional Range:** 0-100 psi	**Selectable Uni-directional Ranges:** 0-50, 25 & 10 psi
Series: A/WPR2-100 (Bi-directional)	**Selectable Bi-directional Range:** ±100 psi	**Selectable Bi-directional Ranges:** ±50, ±25 & ±10 psi
Series: A/WPR2-300 (Uni-directional)	**Default Uni-directional Range:** 0-300 psi	**Selectable Uni-directional Ranges:** 0-150, 75 & 30 psi
Series: A/WPR2-300 (Bi-directional)	**Selectable Bi-directional Range:** ±300 psi	**Selectable Bi-directional Ranges:** ±150, ±75 & ±30 psi

ORDERING

Select a Sensor Series (A), one Wiring Harness (B), & one LCD Option (C). **NOTE:** For maximum line pressures less than 100 psi, you should select the A/WPR2-100 Series and for maximum line pressures between 100 and 300 psi, you should select the A/WPR2-300 Series. The jumpered output range should be selected based upon the maximum expected differential pressure rather than the maximum line pressure. In addition, for applications in which the maximum line pressure is 10 PSI or below with a maximum differential pressure of 5 lbs or less we recommend the use of the A/WP Series Differential pressure with a 3 Valve Manifold for best results.

A Sensor Series	B Wiring Harness	C LCD Option
A/WPR2-30	10'	---- (No LCD)
A/WPR2-100	20'	LCD
A/WPR2-300		

BUILD PART NUMBER

After completing (A), (B) & (C) from the above table, fill in the Part Number Table below. An example part number is offered.

A		B		C
	—		—	

EXAMPLE: A/WPR2-100 - 10' - LCD

Savings Calculations

ECM #4 Replace Existing, Buried Hot Water and Chilled Water Piping

Proposed HTG Usage

ECM 4 - Hot Water Pipe Replacement

Date			Boiler Input (mmbtu)	HW Boiler Input (mmBtu)	Steam Boiler Input (mmBtu)	Steam Boiler Ouput (mmBtu)	DA Usage (mmBtu)	UG Pipe Losses (mmBtu)	Kitchen & Laundry Steam (mmBtu)	Plant HW HX (mmBtu)	HW HX Losses (mmBtu)	CB HW Boiler Output (mmBtu)	UG Pipe Losses (HW) (mmbtu)	Delivered to Bldg (mmbtu)	DHW (mmBtu)	Bldg HW HX Losses (mmBtu)	Space Heating Load (mmBtu)
January	$	54,255	6,782	5,019	1,763	1,446	82	32	1,332			4,116	54	**4,062**	889	58	3,115
February	$	61,844	7,730	6,248	1,482	1,215	69	28	1,118			5,124	48	**5,075**	803	52	4,220
March	$	63,407	7,926	6,248	1,678	1,376	78	32	1,267			5,123	54	**5,070**	889	58	4,123
April	$	39,332	4,916	3,112	1,805	1,480	84	31	1,366			2,552	52	**2,500**	860	56	1,583
May	$	36,875	4,609	2,714	1,895	1,554	88	32	1,435			2,226	54	**2,172**	889	58	1,225
June	$	31,592	3,949	2,064	1,885	1,546	88	31	1,428			1,692	52	**1,640**	860	56	724
July	$	31,001	3,875	1,909	1,967	1,613	91	32	1,490			1,565	54	**1,511**	889	58	564
August	$	31,426	3,928	2,013	1,915	1,571	89	32	1,450			1,651	54	**1,597**	889	58	650
September	$	30,914	3,864	1,980	1,884	1,545	87	31	1,427			1,624	52	**1,572**	860	56	655
October	$	35,416	4,427	2,522	1,905	1,562	88	32	1,442			2,068	54	**2,015**	889	58	1,068
November	$	50,511	6,314	4,613	1,701	1,395	79	31	1,285			3,783	52	**3,731**	860	56	2,815
December	$	62,165	7,771	6,084	1,687	1,383	78	32	1,273			4,989	54	**4,935**	889	58	3,988
Totals	**$**	**528,738**	**66,092**	**44,526**	**21,567**	**17,685**	**1,001**	**371**	**16,312**			**36,511**	**631**	**35,880**	**10,469**	**681**	**24,730**
Percent of Total															-		

HW Boiler Combustion Eff. 82%
Steam Boiler Comb Eff. 82%

Mass Distrubution losses removed in equation

Equipment Specifications Sheets

ECM #4 Replace Existing, Buried Hot Water and Chilled Water Piping

SYSTEM-10
BTU METER

Chilled Water • Hot Water • Condenser Water

ONICON's System-10 BTU meter is the premier platform for accurately measuring and reporting the thermal energy usage, flows and temperatures required by today's High Performance Buildings. Whether it's used for chiller plant optimization, CEP monitoring and control or sub-metering the hydronic energy use across a campus, the System-10 has the versatility and functionality required to integrate seamlessly with your BMS/EMS.

ONICON
Flow and Energy Measurement

• SYSTEM-10 BTU METER •

ONICON
Flow and Energy Measurement

UL LISTED
PROCESS CONTROL EQUIPMENT
3GF5

DESCRIPTION

The System-10 BTU Meter provides highly accurate thermal energy measurement in chilled water, hot water and condenser water systems based on signal inputs from two matched temperature sensors (included) and any of ONICON's insertion or inline flow meters (ordered separately). The basic model provides a local indication of energy, flow and temperature data through an alphanumeric display. An isolated solid state dry contact is provided for energy total. Optional analog outputs and network communications are also available.

APPLICATIONS

Chilled water, hot water and condenser water systems for:

- Commercial office tenant billing
- Central plant monitoring
- University campus monitoring
- Institutional energy cost allocation
- Performance/efficiency evaluations
- Performance contracting energy monitoring

CALIBRATION

Flow meters and temperature sensors are individually calibrated followed by a complete system calibration. Field commissioning is also available.

* National Institute of Standards and Technology

FEATURES

Simple Installation and Commissioning - Factory programmed and ready for use upon delivery. All process data and programming functions are accessible via front panel display and keypad.

Single Source Responsibility - One manufacturer is responsible for every aspect of the energy measurement process ensuring component compatibility and overall system accuracy.

NIST* Traceable Calibration with Certification - Each BTU measurement system is individually calibrated using application specific flow and temperature data and is provided with calibration certificates.

Precision Solid State Temperature Sensors - Custom calibrated and matched to an accuracy better than ±0.15°F over calibrated range.

Highly Accurate Flow Meters - ONICON offers a wide variety of insertion and inline type flow measurement technologies including turbine, electromagnetic and vortex sensing. Each type offers unique advantages depending on the application. All ONICON flow meters are individually wet calibrated and designed to operate over a wide flow velocity range with accuracies ranging from ±0.2% to ±2.0% of rate depending on the model.

Complete Installation Package - All mechanical installation hardware, color coded interconnecting cabling and installation instructions are provided to ensure error-free installation and accurate system performance.

Serial Communications - Optional communications card provides complete energy, flow and temperature data to the control system through a single network connection, reducing installation costs.

Smart button technology simplifies menu page navigation

11451 Belcher Road South, Largo, FL 33773 • USA • Tel +1 (727) 447-6140 • Fax +1 (727) 442-5699
www.onicon.com • sales@onicon.com

SYSTEM-10 BTU METER SPECIFICATIONS

ACCURACY

TEMPERATURE

Overall differential temperature measurement uncertainty of ≤ ± 0.15°F over the stated range
(Includes uncertainty associated with the sensors, transmitters, cabling and calculator input circuitry)

Temperature sensors meet EN1434 / CSA C900.1 accuracy requirements for 1K sensors for cooling applications, 32 to 77°F

Temperature sensors meet EN1434 / CSA C900.1 accuracy requirements for 2K sensors for heating applications, 140 to 212°F

CALCULATOR

Computing nonlinearity within ±0.05%

Calculator meets EN1434 / CSA C900.1 class 1 accuracy requirements for 2K sensors for all applications

PROGRAMMING

Factory programmed for specific application

Field programmable via front panel interface

MEMORY

Non-volatile EEPROM memory retains all program parameters and totalized values in the event of power loss.

DISPLAY

Alphanumeric LCD displays total energy, total flow, energy rate, flow rate, supply temperature, return temperature, serial number and alarm status

Alpha: 16 character, 0.2" high

Numeric: 8 digit, 0.4" high

Rate Display Range: 0 - 9,999,999

Total Display Range: 0 - 9,999,999

The totals will roll over to zero when the maximum count is exceeded.

OUTPUT SIGNALS

Standard:

Isolated solid state dry contact for energy total:
Contact rating: 100 mA, 50 V
Contact duration: 0.5, 1, 2, or 6 sec

Optional:

Analog Output(s) (4-20 mA, 0-10 V or 0-5 V):
One or four analog output(s) available for flow rate, energy rate, supply/return temps, or delta-T.

Serial Communications:

BACnet IP or MS/TP	LONWORKS - TP/FT-10F
Siemens Apogee - P1	Johnson Controls Metasys - N2
MODBUS RTU RS485 or TCP/IP	

TEMPERATURE SENSORS

Solid state sensors are custom calibrated using NIST traceable temperature standards.

Current based signal (mA) is unaffected by wire length.

TEMPERATURE RANGE

Standard liquid temperature range: 32 to 200°F
Optional extended temperature ranges available

Ambient temperature range: -20 to 140°F

LIQUID FLOW SIGNAL INPUT

0-15 V pulse output from any ONICON flow meter

MECHANICAL

Electronics Enclosure:

Standard: Steel NEMA 13, wall mount, 8"x10"x4"
Optional: NEMA 4 (Not UL listed)
Approximate weight: 12 lbs

Temperature Sensor Thermowell Kits:

Thermowells and other kit components vary by fluid type, fluid temperature, pipe material and pipe size. Commonly used kits are listed on the previous page. Contact ONICON for additional thermowell kit options, including Hot Tap Installation Kits for retrofit installations.

ELECTRICAL

Input Power: Based on BTU meters configured for network connection without the optional analog outputs

Standard: 24 VAC, 50/60 Hz, 500 mA
Optional: 120 VAC, 50/60 Hz, 200 mA
230 VAC, 50 Hz, 150 mA

Internal Supply:

Provides 24 VDC at 200 mA to electronics and flow meter

Wiring:

Temperature signals: Use 18-22 ga twisted shielded pair

Flow signals: Use 18-22 ga - see flow meter specification sheet for number of conductors.

Note: Specifications are subject to change without notice.

11451 Belcher Road South, Largo, FL 33773 • USA • Tel +1 (727) 447-6140 • Fax +1 (727) 442-5699
www.onicon.com • sales@onicon.com

TYPICAL SYSTEM-10 INSTALLATION

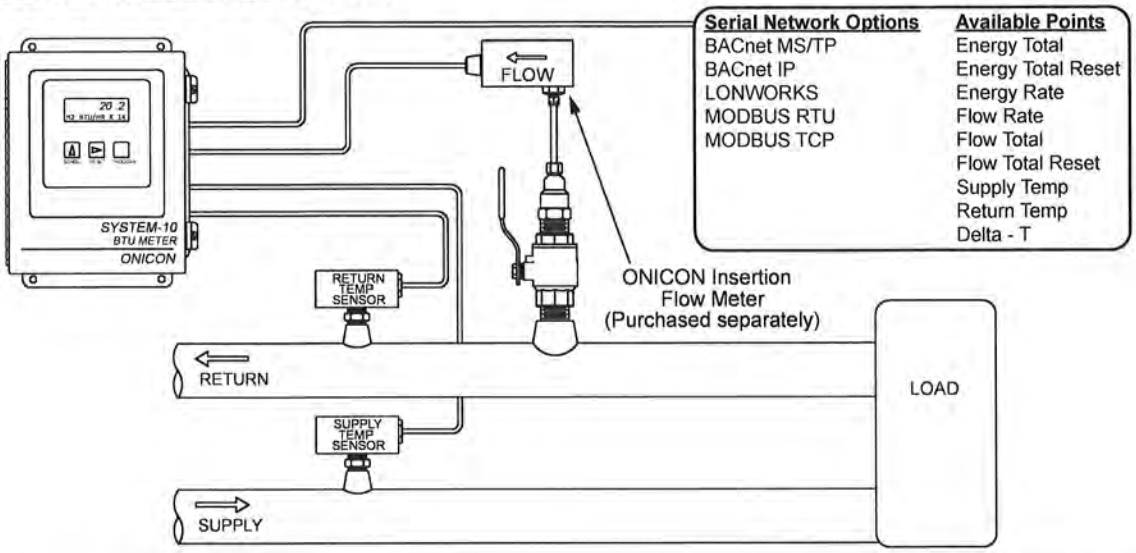

COMPATIBLE FLOW METERS

AVAILABLE OUTPUTS

METER ORDERING INFORMATION

Meter Model Number Coding = SYS-10-ABCD-EFGG

A = Electronics Enclosure

1 = NEMA 13 enclosure with LCD display
2 = NEMA 4 enclosure with LCD display

BB = Input Power

1 = 24 VAC, 12 VA
2 = 120 VAC, 15 VA
3 = 240 VAC, 17.5 VA

C = Serial Communications

0 = No serial communications provided
1 = RS485, BACnet MS/TP
2 = RS485, MODBUS RTU
3 = BACnet IP
4 = MODBUS TCP/IP
5 = DualNet serial communications, IP and RS485
8 = LonWorks

D = Analog Output

0 = No analog output
1 = Single (1) isolated analog output
2 = Four (4) isolated analog outputs

E= Auxiliary Pulse Inputs

0 = (1) Directional pulse input only
1 = (1) Directional pulse and auxiliary pulse input

F= Auxiliary Pulse Outputs

1 = Three (3) pulse outputs, dry contact

GG= Temperature Sensor

01 = Matched pair of current(mA) based sensors, CHW range
02 = Matched pair of current(mA) based sensors, HHW range
S1 = Scaled RTD pair, 122 to 302° F range
S2 = Scaled RTD pair, 32 to 302° F range

11451 Belcher Road South, Largo, FL 33773 • USA • Tel +1 (727) 447-6140 • Fax +1 (727) 442-5699
www.onicon.com • sales@onicon.com

F-1000 Series
Turbine Flow Meters

Chilled Water • Hot Water • Domestic Water

ONICON's F-1000 Series is a family of insertion and inline turbine flow meters that provide accurate measurement over a wide flow range in pipe sizes ranging from ¾" to 72" in diameter. They are an excellent value when measuring water flow in clean closed loop systems.

ONICON
Flow and Energy Measurement

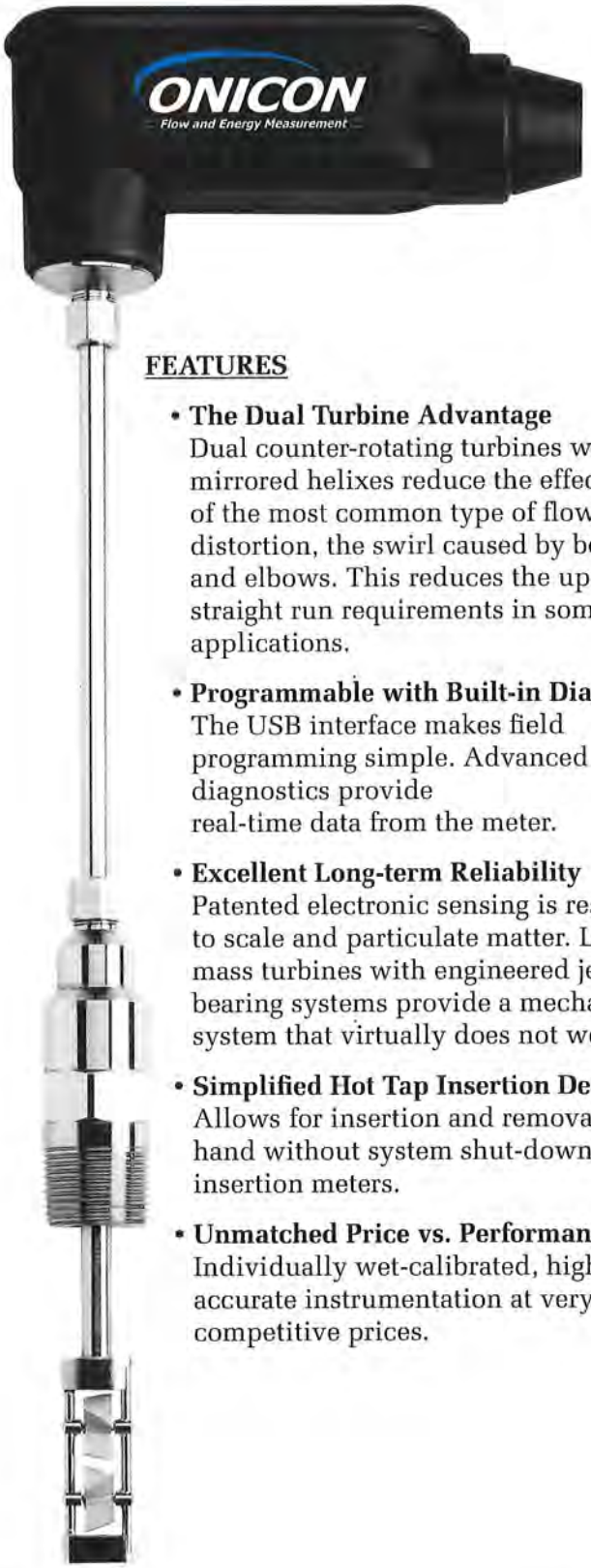

FEATURES

- **The Dual Turbine Advantage**
  Dual counter-rotating turbines with mirrored helixes reduce the effects of the most common type of flow distortion, the swirl caused by bends and elbows. This reduces the upstream straight run requirements in some applications.
- **Programmable with Built-in Diagnostics**
  The USB interface makes field programming simple. Advanced diagnostics provide real-time data from the meter.
- **Excellent Long-term Reliability**
  Patented electronic sensing is resistant to scale and particulate matter. Low mass turbines with engineered jewel bearing systems provide a mechanical system that virtually does not wear.
- **Simplified Hot Tap Insertion Design**
  Allows for insertion and removal by hand without system shut-down for insertion meters.
- **Unmatched Price vs. Performance**
  Individually wet-calibrated, highly accurate instrumentation at very competitive prices.

[1] - National Institute of Standards and Technology

DESCRIPTION

ONICON's F-1000 Series is a family of insertion and inline style turbine meters flow meters that provide accurate, reliable flow measurement in a variety of applications. The F-1000 Series meters are suitable for use in pipes ranging in size from ¾ to 72" in diameter. Each model utilizes ONICON's patented electronic turbine rotation sensing system and unique low mass turbine design that is accurate over wide flow ranges with excellent low flow measurement capability.

THREE DIFFERENT STYLES

- F-1100 single turbine insertion meters
  Suitable for use in 1¼ - 72" pipes
- F-1200 dual turbine insertion meters
  Suitable for use in 2½ - 72" pipes
- F-11XX single turbine inline meters
  Available as ¾ and 1" meters.

APPLICATIONS

- Chilled water or hot water & water/glycol solutions for HVAC
- Domestic/municipal water
- Clean process water

CALIBRATION

Every F-1000 series meter is wet-calibrated using N.I.S.T.[1] traceable standards. A certificate of calibration is provided with each meter.

Axially mounted turbines riding on sapphire bearings virtually eliminate the mechanical load on the tungsten carbide shaft on which they ride.

11451 Belcher Road South, Largo, FL 33773 • USA • Tel +1 (727) 447-6140 • Fax +1 (727) 442-5699
www.onicon.com • sales@onicon.com

THREE DIFFERENT OUTPUT VERSIONS

Frequency & Scaled Pulse/Alarm Outputs
This version provides a high-resolution frequency output and a scaled pulse output for totalizing flow. The frequency output allows for connection to ONICON Btu meters or displays. The scaled pulse output may also be configured as an alarm.

Frequency, Analog & Scaled Pulse/Alarm Outputs
This version provides a high-resolution frequency output, an analog output for flow rate and a scaled pulse output for totalizing flow. The frequency output allows for connection to ONICON Btu meters or displays. The scaled pulse output may also be configured as an alarm.

Frequency, Isolated Analog & Scaled Pulse/Alarm Outputs
This version provides a high-resolution frequency output, an isolated analog output for flow rate and a scaled pulse output for totalizing flow. The frequency output allows for connection to ONICON Btu meters or displays. The scaled pulse output may also be configured as an alarm.

OPERATING RANGE FOR COMMON PIPE SIZES
0.17 TO 20 ft/s
±2% accuracy begins at 0.4 ft/s

Pipe Size (Inches)	Flow Rate (GPM)
¾	0.4 - 38
1	0.4 - 38
1 ¼	0.8 - 95
1 ½	1 - 130
2	2 - 210
2½	2.5 - 230
3	4 - 460
4	8 - 800
6	15 - 1,800
8	26 - 3,100
10	42 - 4,900
12	60 - 7,050
14	72 - 8,600
16	98 - 11,400
18	120 - 14,600
20	150 - 18,100
24	230 - 26,500
30	360 - 41,900
36	510 - 60,900

Utility software available allows for programming and field diagnostics.

Inline meters are provided with meter couplings. Couplings are available with NPT or copper sweat process connections.

11451 Belcher Road South, Largo, FL 33773 • USA • Tel +1 (727) 447-6140 • Fax +1 (727) 442-5699
www.onicon.com • sales@onicon.com

GENERAL SPECIFICATIONS

ACCURACY
± 0.5% of reading at calibrated velocity
Insertion: ± 1% of reading from 3 to 30 ft/s (10:1 range)
± 2% of reading from 0.4 to 20 ft/s (50:1 range)
Inline: ± 2% of reading from 0.8 to 38 GPM (50:1 range)

SENSING METHOD
Electronic impedance sensing (non-magnetic and non-photoelectric)

PIPE SIZE RANGE
Insertion: 1¼ through 72" nominal diameter
Inline: Threaded or sweat union fittings - ¾ or 1"

SUPPLY VOLTAGE
24 ±4 V AC/DC at 100 mA

LIQUID TEMPERATURE RANGE
Medium Temp: 150° F continuous, 200° F peak
High Temp: 280° F continuous, 300° F peak
Meters operating above 250° F require 316 SS construction option

AMBIENT TEMPERATURE RANGE
-5° to 160° F (-20° to 70° C)

OPERATING PRESSURE
400 PSI maximum

PRESSURE DROP
Insertion: Less than 1 PSI at 20 ft/s in 1½" pipe, decreasing in larger pipes and lower velocities
Inline: 3 PSI at maximum flow rate

MATERIAL
Wetted material:
Electroless nickel plated brass stem
Optional: 316 stainless steel [1]
Optional: NSF/ANSI 61/372 version* [1]

OUTPUT SIGNALS AVAILABLE
Frequency Output
0-15 V peak pulse, programmable max Hz
Scaled Pulse / Alarm Output
Isolated solid state dry contact
Contact rating: 100 mA, 50 V
Contact duration: Field programmable; 50, 100, 500 or 1000 ms
Analog Output (non-isolated)
Signal type: 4-20 mA, 0-10 V or 0-5 V (jumper selectable)
Output range: Field programmable
Isolated Analog Output
Signal type: 4-20 mA, 0-10 V or 0-5 V (jumper selectable)
Output range: Field programmable

ELECTRONICS ENCLOSURE
NEMA4 enclosure
Optional: Submersible enclosure

ELECTRICAL CONNECTIONS
Standard: 10' of cable with ½" NPT conduit connection
Optional: Indoor DIN connector with 10' of plenum rated cable

[1] Insertion meters only

* CLASSIFIED c UL us WATER QUALITY
TURBINE INSERTION FLOW METER
NSF/ANSI 61 <MH60590>
ALSO CLASSIFIED IN ACCORDANCE WITH NSF/ANSI 372

METER ORDERING INFORMATION

Meter Model Number Coding = F-1ABB-CC-[illegible]EFGH

A = Number of Turbines
1 = Single Turbine
2 = Dual Turbine

BB = Meter Type
00 = Insertion
34 = ¾" Inline
01 = 1" Inline

CC = Outputs
00 = Freq. and Scaled Pulse
10 = Freq., analog and Scaled Pulse
11 = Freq., Iso. Analog, and Scaled Pulse

[illegible]

A1 = 1.25 - 2.5" (F-1100 Only)
B2 = 2.5 – 4.0" (F-1100 Only)
C3 = 2.5 - 10"
D4 = 2.5 - 16"
E5 = 2.5 - 22"
F6 = 2.5 - 72"
00 = Inline

E= Wetted Materials
1 = Electroless Ni Plated Brass
2 = 316 SS
3 = Bronze Body, Inline

F= Electronics Enclosure
2 = NEMA 4 Weathertight Enclosure
3 = NEMA 6 Submersible Enclosure

G= Wiring Connection
2 = 10' PVC Jacketed Cable, Pig Tail with ½" Conduit Adapter
5 = 10' Plenum Rated Cable, DIN Connector
6 = 25' PVC Jacketed Cable, Pig Tail with ½" Conduit Adapter
7 = 10' Submersible Cable with Connector

H = Process Adapter
1 = 1" NPT Adapter, Medium Temperature (Temp. </= 150° F)
2 = 1" NPT Adapter, High Temperature (Temp. </= 280° F)
3 = 1" NPT Adapter, NSF Rated for Domestic Water
9 = Inline, coupling adapters based on pipe material

11451 Belcher Road South, Largo, FL 33773 • USA • Tel +1 (727) 447-6140 • Fax +1 (727) 442-5699
www.onicon.com • sales@onicon.com

Savings Calculations

ECM #5 Water Conservation

I-CON SYSTEMS, INC.
Your Water Conservation Resource Since 1994

I-CON Systems, Inc.
3100 Camp Road, Oviedo, FL 32765
Toll Free (800) 240-3578
P (407) 365-6241
F (407) 365-7944

I-CON STANDARD LIMITED WARRANTY

LIMITED WARRANTY COVERAGE

I-CON Systems, Inc. (I-CON) warrants its manufactured products to be made of first class materials, free from defects of material or workmanship under normal use and to perform the service for which they are intended in a reliable and efficient manner when properly installed by I-CON or an I-CON Certified Contractor, for a period of one (1) year from the date of purchase (the "Warranty Period"). Coverage under this Limited Warranty is limited to the product's materials and workmanship only and no claims shall be allowed for labor, transportation, or other incidental costs.

If a valid claim is received within the Warranty Period, I-CON will, at its option, (1) repair the defect at no charge, using new replacement parts, or (2) replace the product with a product that is a new similar product or which has been manufactured from new or serviceable used parts and is at least functionally equivalent to the original product. I-CON shall have a reasonable time after determining that a defective product exists to repair or replace such defective product. THE EXCLUSIVE REMEDY FOR ANY DEFECTIVE PRODUCT IS LIMITED TO THE REPAIR OR REPLACEMENT OF THE DEFECTIVE PRODUCT. A replacement product or part that has been installed in accordance with instructions provided by I-CON, assumes the remaining warranty of the original product.

EXCLUSIONS AND LIMITATIONS

This Limited Warranty applies only to products manufactured by I-CON and installed by a Certified I-CON Contractor or Representative, unless otherwise expressly agreed to by I-CON, for the products intended use. I-CON does not warrant that the operation of the product will be uninterrupted or error-free.

This warranty does not apply: (a) to damage caused by use with non-I-CON products; (b) to damage caused by "Acts of God" such as lightning strikes, flood, fire, earthquake or other external causes; (c) to damage caused by operating the product outside the permitted or intended uses described by the manufacturer; (d) to damage caused by servicing (including upgrades and expansions) performed by anyone except an I-CON employee; (e) to a product or part that has been modified to alter functionality or capability without the written permission of I-CON; (f) to any I-CON product has been damaged during service or during removal from service by any person other than an I-CON employee or I-CON Certified Contractor, and only then, while warranty coverage is in effect; (g) items that fall under misuse, improper or uncertified installation, alteration (including removing or obliterating labels), accident or mishandling; or (h) any Envisage hardware or other computer hardware provided by I-CON (such products shall be limited to such hardware manufacturer's warranty and I-CON shall make reasonable efforts to have such warranties assigned to its customers).

THERE ARE NO WARRANTIES WHICH EXTEND BEYOND THE DESCRIPTION ON THE FACE HEREOF. IN NO EVENT IS I-CON RESPONSIBLE FOR ANY CONSEQUENTIAL DAMAGES OR LOSS OF USE CLAIMS OF ANY MEASURE WHATSOEVER. THIS LIMITED WARRANTY SUPERCEEDS ALL PREVIOUS VERSIONS AND IS SUBJECT TO CHANGE AT THE SOLE DISCRETION OF I-CON SYSTEMS, INC.

OBTAINING WARRANTY SERVICE

Please read and review any documentation accompanying the product, including, but not limited to, an operating manual documentation, this Limited Warranty, and troubleshooting guides before contacting I-CON. If the product is still not functioning properly after making use of these resources, please contact I-CON or the representatives listed in the provided documentation. An I-CON representative will help determine whether your product requires return service and, if it does, will inform you how I-CON will provide it. No Product may be returned directly to I-CON without first contacting I-CON for a Return Material Authorization ("RMA") number. An unauthorized return, i.e. one for which an RMA number has not been issued, may be returned to you at your expense. If it is determined that the product may be defective, you will be given an RMA number and instructions for product return. The defective item shall be returned to I-CON, at the customer's expense, and shall clearly display the RMA number on the outside of the package. The claimed defective item shall be properly packaged to ensure no additional damage shall occur during shipping.

I-CON will provide warranty service on products only during the Warranty Period. Service options, parts availability and response times may vary according to conditions and parts availability. Any product not found to be covered under warranty by I-CON may include a minimum service charge and shipping expenses back to the user. All parts found not to be under warranty, but are serviceable to a functioning condition, will be repaired only after the customer has authorized the service to be performed and provided proper payment arrangements.

Project Summary Sheet

14-Nov-18

	Company	**Facility Name and Location**
Project Name:	TenSaves	SCI Houtzdale, PA

Inmate Population:

Total	2468
Cell Population	2168
Dorm Population	300

Staff Population:

Total	325
Security Staff	250
Admin Staff	75

Ground Water Temp F	50
Affected Water Rate per kGal over Minimum	6.46
Affected Blended Water Rate per kGal	$5.89
Affected Sewer Rate per kGal	$1.62
Affected Combined Rate per kGal	$7.51
Fuel Rate per 1 MMBTU (10 therms)	$8.00
Electrical Rate (Electric DHW, $/kWh)	$0.00000
Electric Water Heating (Yes/No)	No

Total Water Consumption Gal/Yr	120,319,333
Minimum Use(@ 225k Gal/day) Gal/Yr	82,181,250
Available Water to Relize Savings Gal/Yr	38,138,083
Affected Water Consumption Gal/Yr	62,896,070
Percentage of Water Affected	52.3%
Percentage of Water Savings	34.7%
Total Water Savings Gal/Yr	41,808,086
Total Water Savings	$ 314,101
Total Fuel Savings	$ 39,370
Total Savings	$ 353,471
Payback	8.29

Facility Totals:

Combi Retrofits, New SS	310
Toilet Retrofits, New SS	0
Lavatory Retrofits, New SS	0
Combi Retrofits	0
Toilet Retrofits	780
Shower Retrofits	224
Lav Retrofits	0
Urinal Retrofits	0
Mop Sink Retrofits	0
Garden Hose Retrofits	0
LF Toilet and Flush Valve	82
LF Showerheads	8
LF Faucet Aerators	120
LF Urinals	0
Envisage Computers	0

Inmate (Cell) Totals:

Toilet Retrofits	1066
Shower Retrofits	200
Lav Retrofits	310
Urinal Retrofits	0
Envisage Computers	0

Inmate Dorm Totals:

Toilet Retrofits	24
Shower Retrofits	24
Lavatory Retrofits	0
Mop Sink Retrofits	0
Garden Hose Retrofits	0
LF Toilet and Flush Valve	17
LF Faucet Aerators	51
LF Urinals	0
LF Showerheads	8
Envisage Computers	0

Staff Totals:

LF Toilet and Flush Valve	65
LF Showerheads	0
LF Faucet Aerators	69
LF Kitchen	0
LF Urinals	0
LF Tank Toilets	0

Proprietary and Confidential
Intelligent Conservation Systems, Inc.

ICS Intelligent Conservation Systems, Inc.

Water Conservation Analysis - Inmate

TenSaves/SCI Houtzdale, PA

14-Nov-18

Facility:	SCI Houtzdale, PA / Inmate
#inmate	2168
Annual Occupancy	100%
# of Days / Year	365
Occupied Days/Year	365
Water Cost /1000 Gallons	$7.51
Fuel / 1M Units	$8.00
Water Temp in Water Heater	50
Water Temp out of Water Heater	140
Mixed Water from Temp.Valve	105
Shower Retrofit Hot Water Percentage	100%

# Of Devices To Be Installed	
I-CON Flush Valve Retrofit	1066
I-CON Shower Valve Retrofit	200
I-CON Lavatory Valve Retrofit	310
Kitch Aerators	0
Urinals	0
Flushometer W.C. Open Area	0
Envisage System	0

Inmate Usage Per Day	
Flush Valve Flushes Per Fixture Before (Cells)	30
Flush Valve Flushes Per Fixture After (Cells)	17
Minutes Per Shower Before	8
Minutes Per Lavatory Aerator	5
Minutes Per Kitchen Aerator	4
Urinal Flushes Per Day	11
Flushometer W.C. Flushes Per Fixture/Day	20
Minutes Per Shower After	7

Device	Gallon Flow Before	Gallon Flow After	Per Day	Gallons Saved	Tenants Inmate	Occupied Days Per Year	# of Devices	Gallons Saved Per Year	Water Cost Per 1000 Gins	Savings Per Devise
I-CON Flush Valve Retrofit	3.50	1.55	30	1.95	2168	365	1066	30,601,929	$7.51	$229,910
I-CON Shower Valve Retrofit	2.50	1.50	8	1.00	2168	365	200	7,517,540	$7.51	$56,479
I-CON Lav (Faucet) Valve Retrofit	0.50	0.50	5	0.00	2168	365	310	-	$7.51	$0
Kitchen Aerator	2.50	2.50	4	0.00	2168	365	0	-	$7.51	$0
Urinal Valve	1.50	1.50	11	0.00	2168	365	0	-	$7.51	$0
Flushometer W.C.	3.50	3.50	20	0.00	2168	365	0	-	$7.51	$0
Envisage							0			
								38,119,469		$286,389

"Total" Savings	*Water Savings per yr*	*$286,389*		
	Fuel Savings per yr	*$32,455*		
	Total Wtr/Fuel Savings pr yr.	*$318,843*	[redacted]	[redacted]

Proprietary and Confidential
Intelligent Conservation Systems, Inc.

Intelligent Conservation Systems, Inc.

14-Nov-18

Water Conservation Analysis - Inmate
TenSaves/SCI Houtzdale, PA

FACILITY INFORMATION

Number of Inmates		2168
Water rate/1,000 Gallons	$	7.51
Cold Water Temp into Heater		50
Hot Water Temp out of Heater		140
Mixed Water from Tempering Valve		105
Shower Retrofit Hot Water Percentage		100%
Fuel/1M BTU		$8.00

AVERAGE USAGE PER DAY

Flush Valves	30	flushes/per unit
Flush Valves	17	flushes/per unit
Showerheads Before	8	minutes/per user
Lavatory Sinks	5	minutes/per user
Kitchen Sinks	4	minutes/per unit
Urinals	11	flushes/per unit
Flush Valves	20	flushes/per unit
Showerheads After	7	minutes/per user

GALLONS USED PER DEVICE

DEVICES	BEFORE RETROFIT	AFTER RETROFIT
Flush Valves Per Flush	3.50	1.55
Showerheads Per Minute	2.50	1.50
Lavatory Aerators Per Minute	0.50	0.50
Kitchen Aerators Per Minute	2.50	2.50
Urinals Per Flush	1.50	1.50
Flush Valves Per Flush	3.50	3.50

NUMBER OF DEVICES TO BE INSTALLED

I-CON Flush Valve Retrofit	1066
I-CON Shower Valve Retrofit	200
I-CON Lavatory Valve Retrofit	310
Kitchen Aerators	0
Urinals	0
Flush Valves	0

TOTAL GALLONS USED PER DEVICE

DEVICES	BEFORE RETROFIT		AFTER RETROFIT		SAVINGS
Flush Valves Per Flush	(30)X(3.5)X(1066)X(365) =	40,854,450	(17)X(1.55)X(1066)X(365) =	10,252,522	30,601,929
Showerheads Per Minute	(8)X(2.5)X(2168)X(365) =	15,826,400	(7)X(1.5)X(2168)X(365) =	8,308,860	7,517,540
Lavatory Aerators Per Minute	(5)X(0.5)X(2168)X(365) =	-	(5)X(0.5)X(2168)X(365) =	-	-
Kitchen Aerators Per Minute	(4)X(2.5)X(0)X(365) =	-	(4)X(2.5)X(0)X(365) =	-	-
Urinals Per Flush	(11)X(1.5)X(0)X(365) =	-	(11)X(1.5)X(0)X(365) =	-	-
Flush Valves Per Flush	(20)X(3.5)X(0)X(365) =	-	(20)X(3.5)X(0)X(365) =	-	-
TOTAL USAGE		56,680,850		18,561,382	38,119,469

TOTAL GALLONS USED PER DEVICE

	MBTUS BEFORE RETROFIT		MBTUS AFTER RETROFIT		SAVINGS
Fuel for Hot Water Showers	(105-50)X(2.5)X(1)X(8)X(2168)X(8.34)X(365)/1M/.85 =	8,541	(105-50)X(1.5)X(1)X(7)X(2168)X(8.34)X(365)/1M/.85 =	4,484	4,057
Fuel for Hot Water Lavatories	(105-50)X(0.5/2)X(5)X(2168)X(8.34)X(365)/1M/.85 =	-	(105-50)X(0.5/2)X(7)X(2168)X(8.34)X(365)/1M/.85 =	-	-
Fuel for Hot Water Kitchen	(105-50)X(2.5)X(4)X(0)X(8.34)X(365)/1M =	-	(105-50)X(2.5)X(4)X(0)X(8.34)X(365)/1M =	-	-
TOTAL SAVED		8,541		4,484	4,057

SUMMARY

Total Gallons of Water Saved After Installation			38,119,469
Total 1,000 Gallon Water Units			38,119
Water Savings Per Year	38,119 X $7.51/1000 Gallons =	$	286,277
Fuel Savings Per Year	4,057 MBTUS X $8.00/MBTUS =	$	32,455
TOTAL SAVINGS PER YEAR		$	318,732

Proprietary and Confidential
Intelligent Conservation Systems, Inc.

Intelligent Conservation Systems, Inc.

Water Conservation Analysis - Inmate Dorm
TenSaves/SCI Houtzdale, PA

14-Nov-18

Facility:	SCI Houtzdale, PA / Inmate Dorm
# of Dorms	0
#inmate	300
Annual Occupancy	100%
# of Days / Year	365
Occupied Days/Year	365
Water Cost /1000 Gallons	$7.51
Fuel / 1M Units	$8.00
Water Temp in Water Heater	50
Water Temp out of Water Heater	140
Mixed Water from Temp.Valve	105
Shower Retrofit Hot Water Percentage	100%
LF Showerhead Hot Water Percentage	100%

# Of Devices To Be Installed	
I-CON Flush Valve Retrofit	24
I-CON Shower Valve Retrofit	24
I-CON Lav (Faucet) Valve Retrofit	0
Mop Sink Retrofits	0
Garden Hose Retrofits	0
LF Toilet and Flush Valve	17
LF Aerator	51
LF Urinals	0
LF Showerheads	8
Envisage Computers	0

Inmate Usage Per Day	
Flush Valve Flushes Per Fixture Before	20
Flush Valve Flushes Per Fixture After	20
Shower Minutes Per User Before	8
Shower Minutes Per User After	7
Lavatory Minutes Per User	4
Mop Sink Minutes Per Fixture Before	20
Mop Sink Minutes Per Fixture After	20
Garden Hose Minutes Per Fixture Before	15
Garden Hose Minutes Per Fixture After	15
LF Toilet Flushes Per Fixture	20
LF Aerator Minutes Per Fixture	10
LF Urinal Flushes Per Fixture	20
LF Showerhead Minutes Per User	10

Device	Gallon Flow Before	Gallon Flow After	Usage Per Day (Pre)	Gallons Saved	Tenants Inmate	Occupied Days Per Year	# of Devices	Gallons Saved Per Year	Water Cost Per 1000 Gins	Savings Per Devise
I-CON Flush Valve Retrofit	3.50	1.60	20	1.90	300	365	24	332,880	$7.51	$2,501
I-CON Shower Valve Retrofit	2.50	1.50	8	1.00	300	365	24	1,040,250	$7.51	$7,815
I-CON Lav (Faucet) Valve Retrofit	0.50	0.50	4	0.00	300	365	0	-	$7.51	$0
Mop Sink Retrofits	6.00	6.00	20	0.00	300	365	0	-	$7.51	$0
Garden Hose Retrofits	8.00	8.00	15	0.00	300	365	0	-	$7.51	$0
LF Toilet and Flush Valve	2.40	1.28	20	1.12	300	365	17	138,992	$7.51	$1,044
LF Aerator	2.20	0.50	10	1.70	300	365	51	316,455	$7.51	$2,378
LF Urinals	1.50	1.50	20	0.00	300	365	0	-	$7.51	$0
LF Showerheads	2.50	2.50	10	0.00	300	365	8	-	$7.51	$0
Envisage Computers							0			
								1,828,577		$13,738

"Total" Savings	*Water Savings per yr*	*$13,738*		
	Fuel Savings per yr	*$ 5,174*		
	Total Wtr/Fuel Savings pr yr.	*$18,912*	[redacted]	[redacted]

Proprietary and Confidential
Intelligent Conservation Systems, Inc.

Water Conservation Analysis - Inmate Dorm
TenSaves/SCI Houtzdale, PA

Intelligent Conservation Systems, Inc.

FACILITY INFORMATION

Number of Dorms	0
Number of Inmates	300
Water rate/1,000 Gallons	$7.51
Cold Water Temp into Heater	50
Hot Water Temp out of Heater	140
Mixed Water from Tempering Valve	105
Shower Retrofit Hot Water Percentage	100%
LF Showerhead Hot Water Percentage	100%
Fuel/1M BTU	$8.00

AVERAGE USAGE PER DAY

Flush Valve Flushes Per Fixture Before	20	flushes/per fixture
Flush Valve Flushes Per Fixture After	20	flushes/per fixture
Shower Minutes Per User Before	8	minutes/per user
Shower Minutes Per User After	7	minutes/per user
Lavatory Minutes Per User	4	minutes/per user
Mop Sink Minutes Per Fixture Before	20	minutes/per fixture
Mop Sink Minutes Per Fixture After	20	minutes/per fixture
Garden Hose Minutes Per Fixture Before	15	minutes/per fixture
Garden Hose Minutes Per Fixture After	15	minutes/per fixture
LF Toilet Flushes Per Fixture	20	flushes/per fixture
LF Aerator Minutes Per Fixture	10	minutes/per fixture
LF Urinal Flushes Per Fixture	20	flushes/per fixture
LF Showerhead Minutes Per User	10	minutes/per user

GALLONS USED PER DEVICE

DEVICES	BEFORE RETROFIT	AFTER RETROFIT
Flush Valves Per Flush	3.50	1.60
Shower Per Minute	2.50	1.50
Lavatory Aerators Per Minute	0.50	0.50
Mop Sinks Per Minute	6.00	6.00
Garden Hoses Per Minute	8.00	8.00
LF Flush Valves Per Flush	2.40	1.28
LF Faucet Aerators Per Minute	2.20	0.50
LF Urinals Per Flush	1.50	1.50
LF Showerheads Per Minute	2.50	2.50

NUMBER OF DEVICES TO BE INSTALLED

I-CON Flush Valve Retrofit	24
I-CON Shower Valve Retrofit	24
I-CON Lav (Faucet) Valve Retrofit	0
Mop Sink Retrofits	0
Garden Hose Retrofits	0
LF Toilet and Flush Valve	17
LF Aerator	51
LF Urinals	0
LF Showerheads	8
Envisage Computers	0

TOTAL GALLONS USED PER DEVICE

DEVICES	BEFORE RETROFIT		AFTER RETROFIT		SAVINGS
I-CON Flush Valve Retrofit	(20)X(3.5)X(24)X(365) =	613,200	(20)X(1.6)X(24)X(365) =	280,320	332,880
I-CON Shower Valve Retrofit	(8)X(2.5)X(300)X(365) =	2,190,000	(7)X(1.5)X(300)X(365) =	1,149,750	1,040,250
I-CON Lav (Faucet) Valve Retrofit	(4)X(0.5)X(300)X(365) =	-	(4)X(0.5)X(300)X(365) =	-	-
Mop Sink Retrofits	(20)X(6)X(0)X(365) =	-	(20)X(6)X(0)X(365) =	-	-
Garden Hose Retrofits	(15)X(8)X(0)X(365) =	-	(15)X(8)X(0)X(365) =	-	-
LF Toilet and Flush Valve	(20)X(2.4)X(17)X(365) =	297,840	(20)X(1.28)X(17)X(365) =	158,848	138,992
LF Aerator	(10)X(2.2)X(51)X(365) =	409,530	(10)X(0.5)X(51)X(365) =	93,075	316,455
LF Urinals	(20)X(1.5)X(0)X(365) =	-	(20)X(1.5)X(0)X(365) =	-	-
LF Showerheads	(10)X(2.5)X(300)X(365) =	-	(10)X(2.5)X(300)X(365) =	-	-
TOTAL USAGE		3,510,570		1,681,993	1,828,577

TOTAL GALLONS USED PER DEVICE

	MBTUS BEFORE RETROFIT		MBTUS AFTER RETROFIT		SAVINGS
Fuel for Hot Water I-CON Shower Valve Retrofit	(105-50)X(2.5)X(1)X(8)X(300)X(8.34)X(365)/1M/.85 =	1,182	(105-50)X(1.5)X(1)X(7)X(300)X(8.34)X(365)/1M/.85 =	620	561
Fuel for Hot Water I-CON Lav (Faucet) Valve Retrofit	(105-50)X(0.5/2)X(4)X(300)X(8.34)X(365)/1M/.85 =	-	(105-50)X(0.5/2)X(4)X(300)X(8.34)X(365)/1M/.85 =	-	-
Fuel for Hot Water Mop Sink Retrofits	(105-50)X(6/2)X(20)X(0)X(8.34)X(365)/1M/.85 =	-	(105-50)X(6/2)X(20)X(0)X(8.34)X(365)/1M/.85 =	-	-
Fuel for Hot Water LF Aerator	(105-50)X(2.2/2)X(10)X(51)X(8.34)X(365)/1M/.85 =	111	(105-50)X(0.5/2)X(10)X(51)X(8.34)X(365)/1M/.85 =	25	85
Fuel for Hot Water LF Showerheads	(105-50)X(2.5)X(1)X(10)X(300)X(8.34)X(365)/1M/.85 =	-	(105-50)X(2.5)X(1)X(10)X(300)X(8.34)X(365)/1M/.85 =	-	-
TOTAL SAVED		1,292		646	647

SUMMARY

Total Gallons of Water Saved After Installation			1,828,577
Total 1,000 Gallon Water Units			1,829
Water Savings Per Year	1,829 X $7.51/1000 Gallons =	$	13,733
Fuel Savings Per Year	647 MBTUS X $8.00/MBTUS =	$	5,174
TOTAL SAVINGS PER YEAR		$	18,907

Proprietary and Confidential
Intelligent Conservation Systems, Inc.

Intelligent Conservation Systems, Inc.

Water Conservation Analysis - Staff

TenSaves/SCI Houtzdale, PA
14-Nov-18

Facility: SCI Houtzdale, PA / Staff	
# of Staff Areas	0
#Staff	325
Annual Occupancy	100%
# of Days / Year	365
Occupied Days/Year	365
Water Cost /1000 Gallons	$7.51
Fuel / 1M Units	$8.00
Water Temp in Water Heater	50
Water Temp out of Water Heater	140
Mixed Water from Temp.Valve	105

# Of Devices To Be Installed	
LF Toilets	65
LF Showerheads	0
LF Aerator	69
Kitchen Aerators	0
LF Urinals	0
LF Tank Type Toilets	0

Staff Usage Per Day	
LF Toilet Flushes Per Fixture	20
LF Showerhead Minutes Per User	0
LF Aerator Minutes Per User	4
Kitchen Aerator Minutes Per User	4
LF Urinal Flushes Per Fixture	10
LF Toilet (Tank) Flushes Per Fixture	20

Device	Gallon Flow Before	Gallon Flow After	Per Day	Gallons Saved	Tenants Staff	Occupied Days Per Year	# of Devices	Gallons Saved Per Year	Water Cost Per 1000 Gins	Savings Per Devise
LF Toilets	3.50	1.28	20	2.22	325	365	65	1,053,390	$7.51	$7,914
LF Showerheads	3.00	3.00	0	0.00	325	365	0	-	$7.51	$0
LF Aerator	2.20	0.50	4	1.70	325	365	69	806,650	$7.51	$6,060
Kitchen Aerators	3.30	3.30	4	0.00	325	365	0	-	$7.51	$0
LF Urinals	1.50	1.50	10	0.00	325	365	0	-	$7.51	$0
LF Tank Type Toilets	3.50	3.50	20	0.00	325	365	0	-	$7.51	$0
								1,860,040		$13,974

"Total" Savings	*Water Savings per yr*	*$13,974*	[redacted]	[redacted]
	Fuel Savings per yr	*$ 1,741*		
	Total Wtr/Fuel Savings pr yr.	*$15,716*	[redacted]	[redacted]

Intelligent Conservation Systems, Inc.

14-Nov-18

Water Conservation Analysis - Staff
TenSaves/SCI Houtzdale, PA

FACILITY INFORMATION

Number of Staff Areas	0
Number of Staff	325
Water Rate/1,000 Gallons	$7.51
Cold Water Temp Into Heater	50
Hot Water Temp Out of Heater	140
Mixed Water from Tempering Valve	105
Fuel/1M BTU	$8.00

AVERAGE USAGE PER DAY

LF Toilets	20	flushes/per unit
LF Showerheads	0	minutes/per staff
LF Aerator	4	minutes/per staff
Kitchen Aerators	4	minutes/per unit
LF Urinals	10	minutes/per unit
LF Tank Type Toilets	20	flushes/per unit

GALLONS USED PER DEVICE

DEVICES	BEFORE RETROFIT	AFTER RETROFIT
Flush Valves per Flush	3.50	1.28
Showerheads Per Minute	3.00	3.00
Lavatory Aerators Per Minute	2.20	0.50
Kitchen Aerators Per Minute	3.30	3.30
Urinals Per Flush	1.50	1.50
Flush Valves (Tank) Per Flush	3.50	3.50

NUMBER OF DEVICES TO BE INSTALLED

LF Toilets	65
LF Showerheads	0
LF Aerator	69
Kitchen Aerators	0
LF Urinals	0
LF Tank Type Toilets	0

TOTAL GALLONS USED PER DEVICE

DEVICES	BEFORE RETROFIT		AFTER RETROFIT		SAVINGS
Flush Valves Per Flush	(20)X(3.5)X(65)X(365) =	1,660,750	(20)X(1.28)X(65)X(365) =	607,360	1,053,390
Showerheads Per Minutes	(0)X(3)X(325)X(365) =	-	(0)X(3)X(325)X(365) =	-	-
Lavatory Aerators Per Minute	(4)X(2.2)X(325)X(365) =	1,043,900	(4)X(0.5)X(325)X(365) =	237,250	806,650
Kitchen Aerators Per Minute	(4)X(3.3)X(0)X(365) =	-	(4)X(3.3)X(0)X(365) =	-	-
Urinals Per Flush	(10)X(1.5)X(0)X(365) =	-	(10)X(1.5)X(0)X(365) =	-	-
Flush Valves (Tank) Per Flush	(20)X(3.5)X(0)X(365) =	-	(20)X(3.5)X(0)X(365) =	-	-
TOTAL USAGE		2,704,650		844,610	1,860,040

TOTAL GALLONS USED PER DEVICE

	MBTUS BEFORE RETROFIT		MBTUS AFTER RETROFIT		SAVINGS
Fuel for Hot Water LF Showerheads	(105-50)X(3/2)X(0)X(325)X(8.34)X(365)/1M/.85 =	-	(105-50)X(3/2)X()X(325)X(8.34)X(365)/1M/.85 =	-	-
Fuel for Hot Water LF Aerator	(105-50)X(2.2/2)X(4)X(325)X(8.34)X(365)/1M/.85 =	282	(105-50)X(0.5/2)X()X(325)X(8.34)X(365)/1M/.85 =	64	218
Fuel for Hot Water Kitchen Aerators	(105-50)X(3.3)X(4)X(0)X(8.34)X(365)/1M =	-	(105-50)X(3.3)X(4)X(0)X(8.34)X(365)/1M =	-	-
TOTAL SAVED		282		64	218

SUMMARY

Total Gallons of Water Saved After Installation			1,860,040
Total 1,000 Gallon Water Units			1,860
Water Savings Per Year	1,860 X $7.51/1000 Gallons =	$	13,969
Fuel Savings Per Year	218 MBTUS X $8.00/MBTUS =	$	1,741
TOTAL SAVINGS PER YEAR		$	15,710

Proprietary and Confidential
Intelligent Conservation Systems, Inc.

Intelligent Conservation Systems, Inc.

MEASUREMENT AND VERIFICATION (M&V) PROCEDURES FOR

- **I-CON SYSTEMS WATER CONSERVATION PRODUCT LINE**
- **LOW-FLOW FIXTURE UPGRADES**

M&V Overview

The primary goal of this Measurement and Verification (M&V) is to accurately quantify pre and post project data for project savings analysis and effectiveness. The measurement services will be documented on a M&V Form provided by ICS unless the customer has provided their own. This form will include location (i.e. building, floor, area, room), date, description, volume per unit, and the signatures of the Contractor and witness. Intelligent Conservation Systems, Inc. (ICS) does not use electronic paddle wheel technology to perform M&V on toilets, showers, or sinks. These electronic devices require calibration on a regular basis and do not provide a measure of consistency that ICS is comfortable with. Therefore ICS uses a procedure that is simple, accurate and reflects actual water volume measurements.

M&V Fixture Selection

The general fixtures selected for M&V will be confirmed during the contract phase of the project based on % or quantity. The specific fixtures selected must be an accurate representation of the total scope (i.e. a five level building with equal fixture counts and models per floor, will have M&V conducted equally for each of the five floors). Each specific fixture will be measured during both the Pre and Post Measurement Process.

M&V of Lavatories, Hoses, Sprayers

Sinks are measured using a graduated flow bag to determine the actual gallons per minute from a faucet aerator. The procedure is to measure the maximum flow from an existing aerator on a timed interval. The flow bag will, by its own graduated markings, provide a measure of volume in gallons per minute (gpm), by the amount of water contained within the bag after the timed interval.

Tools:

1. M&V form
2. Pen
3. Flow Bag
4. Stop Watch (timing device)

Procedural steps:

1. Record fixture info/location on M&V form
2. Enclose bag opening over aerator
3. Simultaneously turn on water and start timed interval as noted on Flow Bag
4. Remove bag from water flow at the end of timed interval
5. Record results (in gpm) on M&V form immediately

M&V of Showers

Showers are measured using a graduated flow bag to determine the actual gallons per minute from a shower head. The procedure is to measure the maximum flow from an existing aerator on a timed interval. The flow bag will, by its own graduated markings, provide a measure of volume in Gallons per minute (gpm), by the amount of water contained within the bag after the timed interval.

Tools:

1. M&V form
2. Pen
3. Flow Bag
4. Stop Watch (timing device)

Procedural steps:

1. Record fixture info/location on M&V form
2. Enclose bag opening over shower head
3. Simultaneously turn on water and start timed interval as noted on Flow Bag
4. Remove bag from water flow at the end of timed interval
5. Record results (in gpm) on M&V form immediately

M&V of Water closets

Water closet flush valves are measured using a graduated container and a procedure to determine the amount of water used in an average flush. The unit measure of volume is gallons per flush (gpf). The water closet is evacuated of all water using a wet dry vacuum any water inside the wet dry vacuum is disposed of. The water closet outlet is blocked by inserting an inflatable ball (Flo-Block or Churne). This ball is then inflated and seals the entire water outlet. (NOTE: The blocking of the outlet is done past the water-jet to capture all water thru the flush valve... Porcelain units are approx. 6 inches of not visible and Penal Stainless steel is approx. 16" into the throat to get water being sent thru internal jetting)

To properly measure the I-CON flush valve volume the measurement has to be done thru the fixture. Back pressure supplied by the fixture does affect the Flush Valve performance. The I-CON flush valve requires the backpressure created by the fixture to set its calibration / adjustment.
NOTE: Adjusting the I-CON Flush Valve without the back pressure of the fixture will result in inadequate performance.

Tools:

- M&V form
- Pen
- Wet Dry Vacuum / pump
- Churne Ball
- Hose Extension
- Air Pump
- Graduated Container
- Extension Cord
- Plug-in Ground Fault Circuit Interrupter (GFCI)

Procedural steps for I-CON flush valve:

- Record fixture info on M&V form
- Put on all Personal protective equipment (gloves, eyeglasses)
- Perform repeated flushes of the water closet to ensure good operation and any contents are cleared. If flush is over 15 seconds in length, caution may be taken to prevent flooding testing

- Evacuate all water from toilet using a wet dry vacuum /pump
- Remove all water from the wet dry vacuum /pump
- Insert inflatable ball into the throat of the toilet and inflate
- Flush the water closet by pressing the button / lever only once
- Evacuate the toilet of all fluids with Wet Dry Vacuum / Pump
- Place all fluids into the graduated container
- Record results (in gpf) on M&V form immediately
- Perform commissioning (Cx) procedures & complete the Cx checklist

Procedural steps for I-CON flush valve:

- Record fixture info on M&V form
- Set controller to override (unlimited flushes)
- Put on all Personal protective equipment (gloves, eyeglasses)
- Perform approximately 25 flushes of the water closet to ensure good operation (for selected toilets in M&V sample population only if the flush valve has not been in service for one day prior to M&V of the fixture)
- Evacuate all water from toilet using a wet dry vacuum /pump
- Remove all water from the wet dry vacuum /pump
- Insert inflatable ball into the throat of the toilet and inflate
- Flush the water closet by pressing the button / lever only once
- Evacuate the toilet of all fluids with Wet Dry Vacuum / Pump
- Place all fluids into the graduated container
- Record results (in gpf) on M&V form immediately
- Reset controller to specified setting for normal operation
- Perform commissioning (Cx) procedures & complete the Cx checklist

Equipment Specifications Sheets

ECM #5 Water Conservation

NEXUS® Model - 8 I/O AC Controller

CTR-X12-AC-08 Series

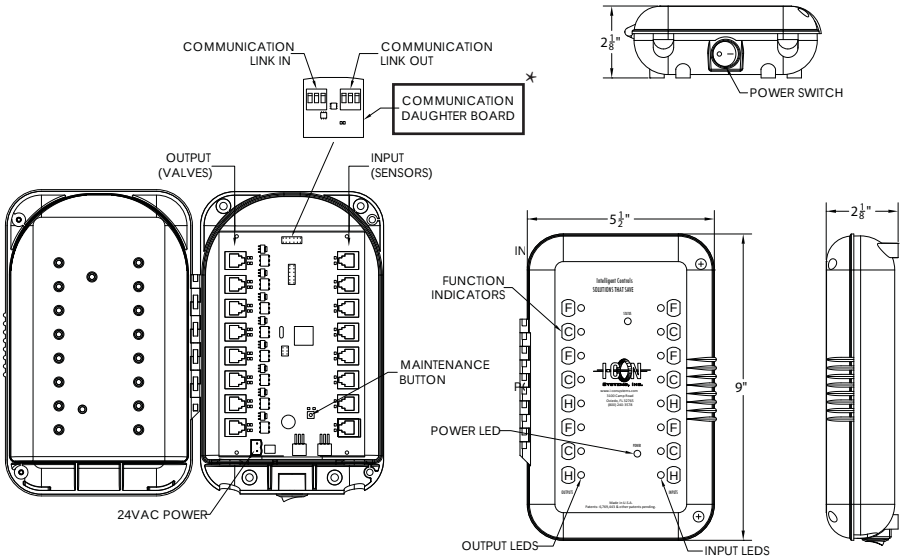

* **Note:** Communication Daughter Board is required for communicating controllers only.

► Description

Standalone or Communicating Eight Input/Eight Output Controller used to control up to Eight buttons and valves. Multiple controllers can be networked and linked into an I-CON ENVISAGE® powered computer system.

► 8 I/O Program Type (choose one)

	Port # 12345678
☐ Two Combies and Two Showers	(HCFHCFSS)
☐ Two Combies and Two Flush	(HCFHCFFF)
☐ Two Combies and Cold, Hot	(HCFHCFCH)
☐ Two Combies and Flush, Hot	(HCFHCFFH)
☐ Eight Showers	(SSSSSSSS)
☐ Eight Waterclosets	(FFFFFFFF)
☐ Four Lavatories	(HCHCHCHC)
☐ Special Order - Please Contact Factory	_____

Specifications

- New Water Resistant Enclosure
- Designed for penal use and other vandal prone areas to conserve potable water consumption
- 24 VAC power with low power consumption
- Electrical telephone plug type connectors for sensor and solenoid
- Ability to be remotely located up to three hundred (300) feet from the associated fixtures
- UL Listed (E308296) and independently tested
- Adjustable program times without dip switches
- Power switch on the exterior of the housing
- Amber power LED illuminates with power
- Green LEDs illuminate at each port to show the port is active
- Red LEDs indicate block times are in effect
- Power surge protection and voltage spike protection
- Nominal Current Draw: 90mA
- Current Draw per active port: 180 mA

► Accessories

See Accessories Section of the I-CON catalog or contact our Customer Service Team for details.

This space is for Architect/Engineer approval

The information contained in this document is subject to change without notice.

I-CON Systems, Inc. • 3100 Camp Road, Oviedo, FL 32765 • Toll Free (800) 240-3578 • Fax (407) 365-7944 • www.i-con.com

©2012 I-CON Systems, Inc. One or more products contained herein are protected by U.S. Patent with other undergoing the patent process. Printed in the U.S.A. JAN 2012/01

NEXUS® Model - 4 I/O AC Controller

CTR-X12-AC-04 Series

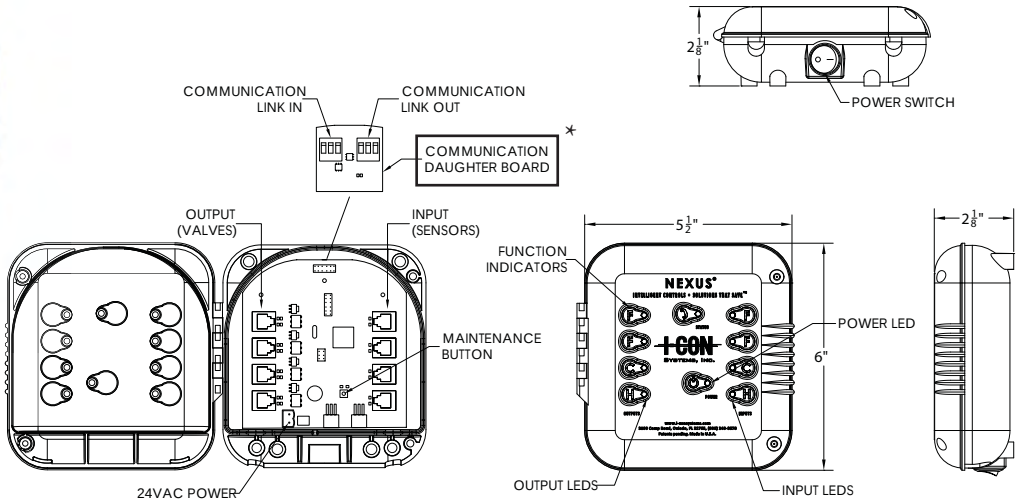

* **Note:** Communication Daughter Board is required for communicating controllers only.

► Description

Standalone or Communicating Four Input/Four Output Controller used to control up to Four buttons and valves. Multiple controllers can be networked and linked into an I-CON ENVISAGE® powered computer system. Adjust run-times and lockouts with a NEXUS® Time Adjuster or any ENVISAGE® product.

► 4 I/O Program Type (choose one)

	Port # 1234
☐ One Combie and One Shower	(HCFS)
☐ One Combie and Flush	(HCFF)
☐ Two Cold and Two Flush	(CCFF)
☐ Four Showers	(SSSS)
☐ Four Waterclosets	(FFFF)
☐ Two Lavatories	(HCHC)
☐ Special Order - Please Contact Factory	_____

Specifications

- New Water Resistant Enclosure
- Designed for penal use and other vandal prone areas to conserve potable water consumption
- 24 VAC power with low power consumption
- Electrical telephone plug type connectors for sensor and solenoid
- Ability to be remotely located up to three hundred (300) feet from the associated fixtures
- UL Listed (E308296) and independently tested
- Adjustable program times without dip switches
- Power switch on the exterior of the housing
- Amber power LED illuminates with power
- Green LEDs illuminate at each port to show the port is active
- Red LEDs indicate block times are in effect
- Power surge protection and voltage spike protection
- Nominal Current Draw: 90mA
- Current Draw per active port: 180 mA

► Accessories

See Accessories Section of the I-CON catalog or contact our Customer Service Team for details.

This space is for Architect/Engineer approval

The information contained in this document is subject to change without notice.

I-CON Systems, Inc. • 3100 Camp Road, Oviedo, FL 32765 • Toll Free (800) 240-3578 • Fax (407) 365-7944 • www.i-con.com

©2012 I-CON Systems, Inc. One or more products contained herein are protected by U.S. Patent with other undergoing the patent process. Printed in the U.S.A. SEPT 2014/09

NEXUS® Model 1 I/O AC Standalone Controller

CTR-X11.3-S-01 Series

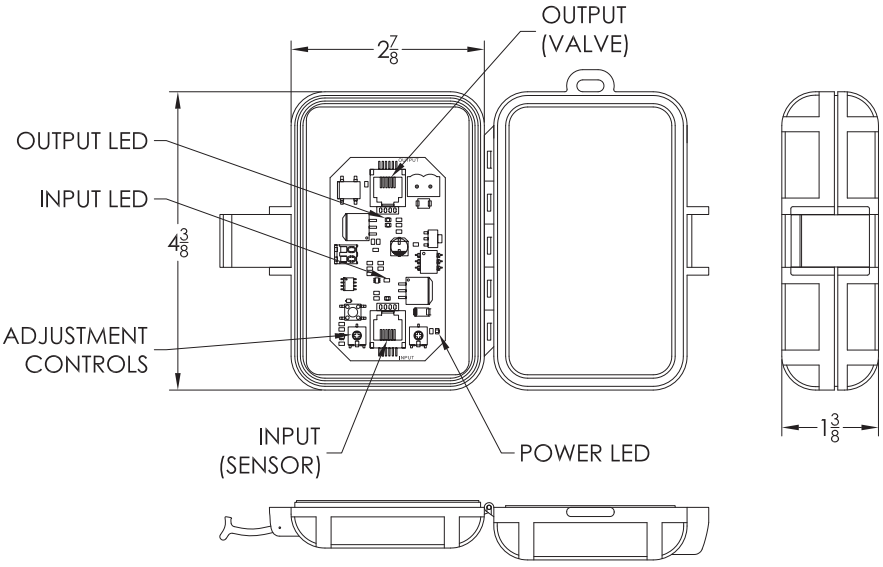

► Description

24VAC standalone electronic controller used to control a single pre-tempered shower, watercloset, or lavatory valve.

► Program Type (choose one)

	Port # 1
☐ One Cold	(C)
☐ One Flush	(F)
☐ One Hot	(H)
☐ One Shower	(S)
☐ Special Order - Please Contact Factory	_____

► Timing Adjustment Option (choose one)

☐ Standard	
☐ Custom Lockout Times	(Waterclosets)
☐ Custom Run Times	(Showers)
☐ Custom Lockout Times and Runtimes	(WC & Shower)

► Accessories

See Accessories Section of the I-CON catalog or contact our Customer Service Team for details.

Specifications

- Specifically designed for penal use and other vandal prone areas to conserve potable water consumption
- 24 VAC power with low power consumption
- Electrical telephone plug type connectors for sensor and solenoid
- Ability to be remotely located up to three hundred (300) feet from the associated fixtures
- UL Listed (E308296) and independently tested
- Adjustable program times without dip switches
- Amber power LED illuminates with power
- Green LEDs illuminate at each port to show the port is active
- Red LEDs indicate block times are in effect
- Power surge protection and voltage spike protection

This space is for Architect/Engineer approval

The information contained in this document is subject to change without notice.

I-CON Systems, Inc. • 3100 Camp Road, Oviedo, FL 32765 • Toll Free (800) 240-3578 • Fax (407) 365-7944 • www.i-con.com

©2014 I-CON Systems, Inc. One or more products contained herein are protected by U.S. Patent with other undergoing the patent process. Printed in the U.S.A. OCT 2014/10

15” Lav-Toilet Combination

FXR-SS-C-1010 Series

Fixture maybe featured with available options.

Specification Guide

- Floor mounted cabinet with optional wall or floor outlet waste.
- Oval lavatory basin with fast drain, air circulating self draining soap dish, and 4” high backsplash.
- Elbow lavatory waste with 1 ¼” OD plain end extended 3” beyond rear of fixture.
- Flushing inlet connection 1 ½” FIPT.
- Integral elongated seat.
- Self draining flushing rim.
- Blowout flushing action.
- 2 ⅜” OD toilet waste outlet with plain end extended 3” beyond rear of fixture.
- Fully enclosed trap.
- Cabinet interior is provided with a sound dampening, fire resistant material.
- Optional valve and bubbler conform with lead free requirements for NSF61.
- Anchoring shall be a 6-point mounting system, furnished with necessary fasteners for proper installation.

Note: Optional Wall Sleeve or Metal Template is recommended for all installations for required wall openings.

► Description

This Combination Lavatory/Toilet Fixture is designed for high security areas with an accessible pipe chase. Fixtures are fabricated using 14-gauge type 304 stainless steel, seamlessly welded to form a one piece vandal resistant unit. Exposed surfaces are polished to a satin finish, except for the integral seat which is polished to a bright mirror finish.

► Performance

I-CON fixtures are designed to withstand 5,000 lbs. loading without permanent deflection and damage. They meet or exceed ASME A112.19.3-2008 and CSA B45.4-08 requirements. The trap design will allow for a 2 ⅛” ball to pass. When used with the I-CON MOMENTUM® Flush Valve, the unit is capable of flushing 1.0 gallon per flush. If unit is used with other flush valves, the unit will flush using 1.6 gallons per flush. A minimum 1” supply line providing a minimum 25psi flushing pressure is required.

► Recommended I-CON Intelligent Control System

The system includes low voltage water resistant controllers, waterproof stainless steel actuators, direct acting solenoid valves with no diaphragms, and an ASSE certified flush valve proven to be more reliable and less expensive to maintain than traditional valves. When used with the I-CON MOMENTUM® Flush Valve, the unit is capable of flushing 1.0 gallon per flush exceeding all HET requirements. The I-CON System can be configured as a standalone or communicating system linked to our touchscreen PC technology, which both configurations offer with the capability to stop flooding and abuse while managing toilet flushes per hour/per fixture reducing water usage and sewer costs.

► Accessories & Options

See accessories and available options on page 2.

I-CON Systems, Inc. • 3100 Camp Road, Oviedo, FL 32765 • Toll Free (800) 240-3578 • Fax (407) 365-7944 • www.i-con.com

©2016 I-CON Systems, Inc. One or more products contained herein are protected by U.S. Patent with other undergoing the patent process. Printed in the U.S.A.

15” Lav-Toilet Combination

FXR-SS-C-1010 Series

► **Wall Type (must select one)**
☐ Block ☐ Concrete ☐ Steel

► **Wall Thickness (must select one)**
☐ Less than 3 ⅝” ☐ 3 ⅝” ☐ 5 ⅝” ☐ 6” ☐ 7 ⅝” ☐ 8”

► **Access Type (must select one)**
☐ Rear

► **Fixture Location (must select one)**
☐ Off Floor ☐ On Floor

► **Outlet Location (must select one)**
☐ Floor Outlet ☐ Wall Outlet

► **Toilet Orientation (must select one)**
☐ Angled Left ☐ Angled Right ☐ Centered

► **Basin Selection (must select one)**
☐ Oval Bowl

► **Lavatory Bubbler (must select one)**
☐ Lavatory Filler
☐ Penal Bubbler
☐ Suicide Resistant Bubbler
☐ Penal Bubbler with Mouthguard

► **Lavatory Button Cutout (must select one)**
☐ I-CON Single Temperature
☐ I-CON Dual Temperature

► **Toilet Button Cutout (must select one)**
☐ None
☐ I-CON Momentum® Flush Valve
☐ I-CON Flush Valve Powered by ProLAST®

► **Toilet Waste (must select one)**
☐ Standard 3” Beyond Rear of Fixture
☐ Custom ___ Inches Beyond Rear of Fixture
☐ Gasket Waste Outlet

► **Modified Dimensions (optional)**
☐ See changes selected on page 3

► **Lavatory Waste (must select one)**
☐ Standard 3” Beyond Rear of Fixture (Stainless)
☐ Custom ___ Inches Beyond Rear of Fixture (Stainless)
☐ 1 ½” FIPT to Rear of Fixture (Stainless)
☐ P-Trap in Cabinet / Standard 3” Beyond Rear of Fixture (Stainless)
☐ P-Trap in Cabinet / Custom ___ Inches Beyond Rear of Fixture (Stainless)
☐ P-Trap in Cabinet / 1 ½” FIPT to Rear of Fixture (Stainless)
☐ Combined Waste (Stainless)
☐ P-Trap in Cabinet, Cast Brass with Plug, Removable
☐ Thru-Wall Connection With P-Trap

► **Mounting Accessory (optional)**
☐ Wall Sleeve ☐ Wall Template
Note: Additional documents required.

► **Toilet Waste Couplings - No Hub (must select one)**
☐ None
☐ 2 ⅜” Stainless Steel to 3” Cast Iron / Plastic
☐ 2 ⅜” Stainless Steel to 3” Cast Iron / Plastic with Cleanout T & Plug
☐ 2 ⅜” Stainless Steel to 3” Cast Iron / Plastic with Cleanout T & Pinned Plug
☐ 2 ⅜” Stainless Steel to 3” Cast Iron / Plastic with Cleanout T & Hook Assembly
☐ 2 ⅜” Stainless Steel to 4” Cast Iron / Plastic
☐ 2 ⅜” Stainless Steel to 4” Cast Iron / Plastic with Cleanout T & Plug
☐ 2 ⅜” Stainless Steel to 4” Cast Iron / Plastic with Cleanout T & Pinned Plug
☐ 2 ⅜” Stainless Steel to 4” Cast Iron / Plastic with Cleanout T & Hook Assembly

► **Toiletry Accessories (optional)**
☐ Towel Hook Quantity _____ Location: ☐ left ☐ right
☐ Toothbrush Quantity _____ Location: ☐ left ☐ right
☐ Integral Tissue Holder ☐ left ☐ right ☐ center
☐ Hinged White Plastic Seat without cover
☐ Integral Shelf

► **Additional Options (optional)**
☐ Suicide Resistant Skirt
☐ Vent Grill ☐ left ☐ right
☐ Lavatory Overflow
☐ Toilet Shipping Cover
☐ 12 Gauge Cabinet
☐ Flush Valve Opposite in Lieu of Standard Location
☐ Flush Valve Through Wall Connector / Length:____ inches (Minimum 3”)

Note: If any modification is required please contact factory for availablity.

Revised: 09/02/16

1. Fast drain
2. Soap dish
3. Mirror finish seat
4. 1 ¼” Lavatory waste outlet
5. 1 ½” FIPT flush supply inlet
6. 2 ⅜” Toilet waste outlet
7. ½” Threaded anchor
8. Optional I-CON electronic flush valve

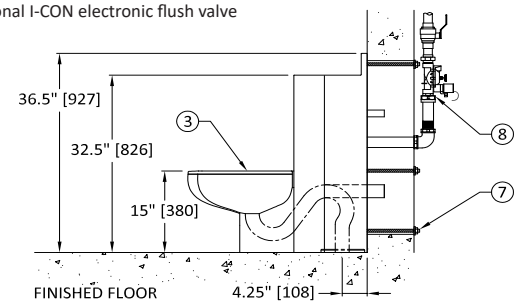

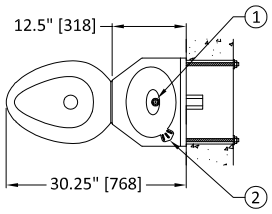

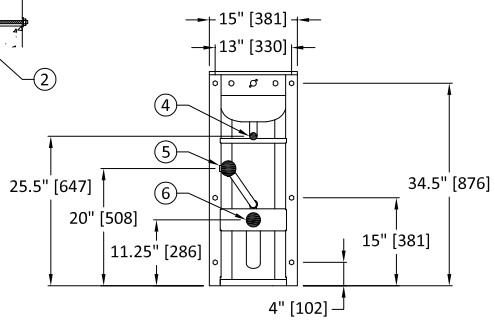

Important: Installation instructions and rough-in are included with each fixture. Do not modify these drawings. Do not rough in with certified dimensons. Dimensons are subject to manufacturer’s tolerance of plus or minus 1/4” and change without notice. I-CON assumes no responsibility for use of voided or superseded data. © I-CON Systems, Inc.

Approved for Manufacturing
Company _____ Quantity _____
Signature_____ Date _____

MOMENTUM® Model Electronic Retrofit Flush Valve

VLV-FVL-3801 Series

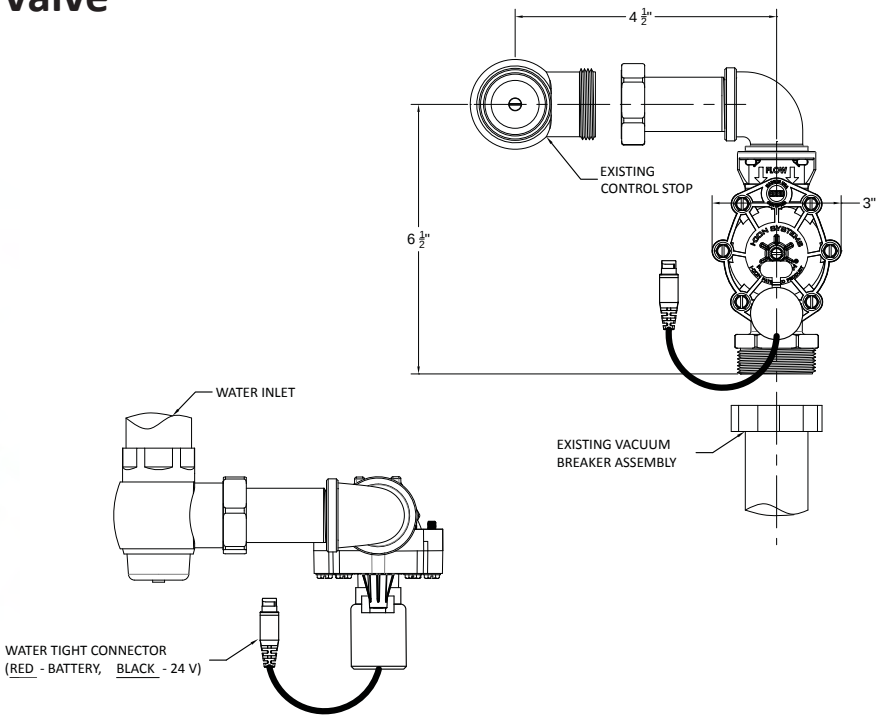

► Description

Concealed Water Closet and Urinal Flush Valve used in retrofit applications to reduce consumption and abuse.

► High Velocity Flow Rates

- 1.6 gpf on 3.5 gallon WC fixture - Low Consumption (LC)
- .9 gpf on 1.6 gallon WC fixture - Ultra High Efficient (UHE)
- .5 gpf on 1.0 gallon Urinal fixture - Low Consumption (LC)
- .125 gpf (1 pint) on Urinal fixture - Ultra High Efficient (UHE)

► Solenoid Power (choose one)

☐ 24 Volts AC
☐ 9 Volts DC (Battery Operated)

► Accessories

For additional accessories, see the Accessories Section of the I-CON catalog or contact our Customer Service Team for details.

Specifications

- Third Party Tested and approved for flushing 1.6 gallons on a 3.5 gallon fixture and .9 gallons on a 1.6 gallon fixture
- No metering diaphragms to fail and clog
- Engineered non-metallic valve body made from high strength glass filled polymer for advanced corrosion resistance
- Ability to flush using manual by-pass handle
- Straight through flow path to maximum flush velocity and provide superior force of flush
- All solenoids are interchangeable with other I-CON valves reducing spare parts
- Positive valve shut-off after pressure loss eliminating continual flush of typical flushometers
- Easily retrofits to existing inlet and outlet water piping hardware
- Flush activation adjustment to overcome calcium build-up blocking older flush jets

This space is for Architect/Engineer approval

The information contained in this document is subject to change without notice.

I-CON Systems, Inc. • 3100 Camp Road, Oviedo, FL 32765 • Toll Free (800) 240-3578 • Fax (407) 365-7944 • www.i-con.com

©2013 I-CON Systems, Inc. One or more products contained herein are protected by U.S. Patent with other undergoing the patent process. Printed in the U.S.A. JUN 2017/23

ELEMENT® Hot and Cold Model Electronic Manifold Lavatory Valve

VLV-LAV-4830 Series

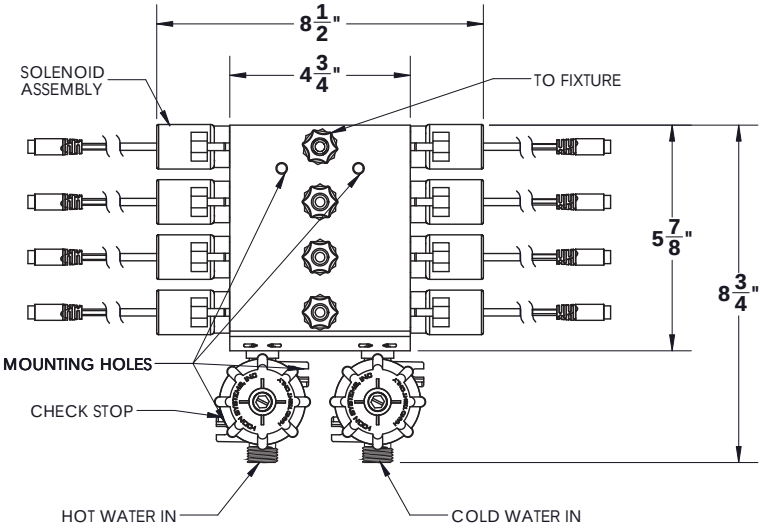

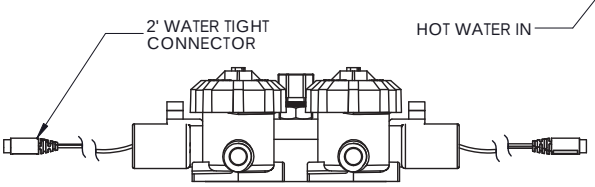

► **Description**
In-line shower valve for use with pre-tempered water.

► **Number of hot and cold lavatories** (choose one)
- ☐ One lavatory
- ☐ Two lavatories
- ☐ Four lavatories

► **Solenoid Power** (choose one)
- ☐ 24 Volts AC
- ☐ 9 Volts DC (Battery Operated)

► **Accessories**

For additional accessories, see the Accessories Section of the I-CON catalog or contact our Customer Service Team for details.

Specifications

- New pressure compensating 0.5 GPM flow regulators as standard
- New check stop retaining clips for added support and reliability
- Expandable valve solution allowing for one (1) hot and cold water supply for up to four (4) lavatories
- No metering diaphragms to fail and clog
- Engineered non-metallic polymer valve body for advanced corrosion resistance
- Ability to activate using manual by-pass handle
- All solenoids are interchangeable with other I-CON valves reducing spare parts
- Positive valve shut-off after pressure loss eliminating continual running of valve
- Maximum water temperature of 120 degrees F and maximum pressure of 100 PSI
- 1/2" NPT supply connections and 3/8" OD tubing outlet

This space is for Architect/Engineer approval

The information contained in this document is subject to change without notice.

I-CON Systems, Inc. • 3100 Camp Road, Oviedo, FL 32765 • Toll Free (800) 240-3578 • Fax (407) 365-7944 • www.i-con.com

©2012 I-CON Systems, Inc. One or more products contained herein are protected by U.S. Patent with other undergoing the patent process. Printed in the U.S.A. JUN 2015/06

Electronic In-Line Shower Valve

VLV-SHW-5775 Series

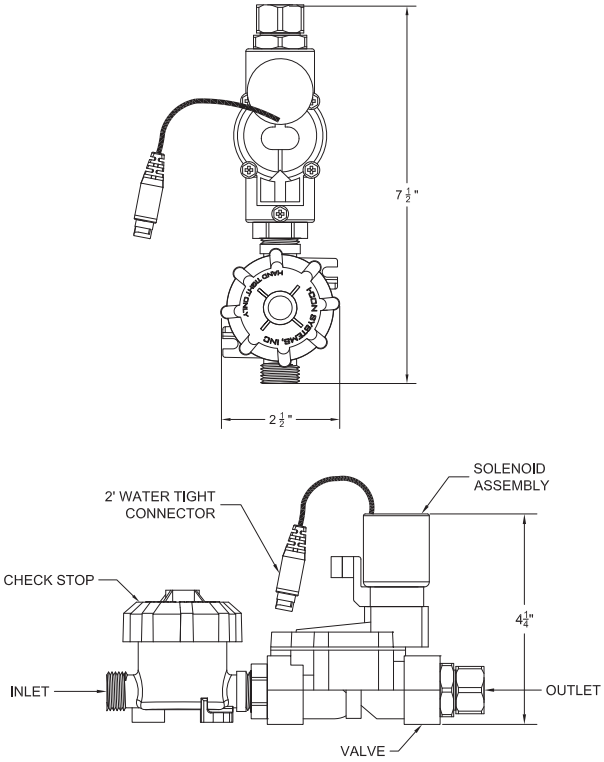

► **Description**
In-line shower valve for use with pre-tempered water.

► **Inlet Fitting** (choose one)
- ☐ 1/2" IPS - Requires Check Stop Strainer
- ☐ Special Order - Please Contact Factory _____

Note: NPT to Compression Available and Sold Separately

► **Outlet Fitting** (choose one)
- ☐ 3/8" Compression
- ☐ 1/2" Compression
- ☐ 5/8" Compression
- ☐ Special Order - Please Contact Factory _____

► **Strainer** (choose one)
- ☐ 1/2" Check Stop Strainer
- ☐ None

► **Solenoid Power** (choose one)
- ☐ 24 Volts AC
- ☐ 9 Volts DC (Battery Operated)

► **Accessories**

For additional accessories, see the Accessories Section of the I-CON catalog or contact our Customer Service Team for details.

Specifications

- In-line shower valve solution for one (1) pre-temperd shower fixture
- No metering diaphragms to fail and clog
- Engineered non-metallic valve body made from DuPont Zytel for advanced corrosion resistance
- Ability to activate using manual by-pass handle
- Advanced design allows for shower valve to be located 50 feet from fixture
- All solenoids are interchangeable with other I-CON valves reducing spare parts
- Positive valve shut-off after pressure loss eliminating continual running
- Maximum water temperature of 120 degrees F and maximum pressure of 100 PSI
- Optional in-line strainer/screen filter to help remove debris prior to shower head

This space is for Architect/Engineer approval

The information contained in this document is subject to change without notice.

I-CON Systems, Inc. • 3100 Camp Road, Oviedo, FL 32765 • Toll Free (800) 240-3578 • Fax (407) 365-7944 • www.i-con.com

©2012 I-CON Systems, Inc. One or more products contained herein are protected by U.S. Patent with other undergoing the patent process. Printed in the U.S.A. MAR 2018/14

TruTOUCH® Model
Force Activated Touch Sensor

SEN-1501 Series

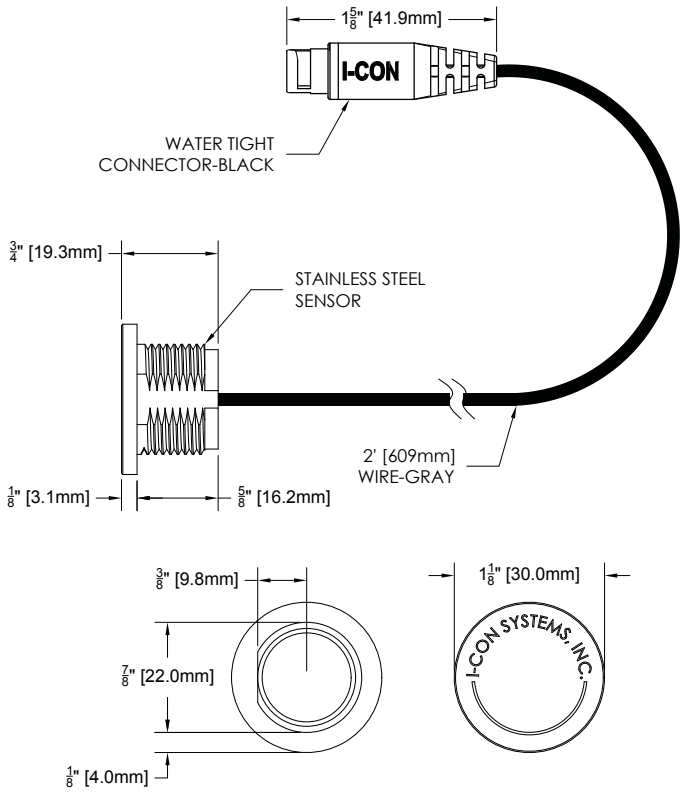

► **Description**

Fully Electronic Force Activated Sensor with no moving parts. Sensor includes a two foot lead with watertight connector. Lead cable with RJ connector is **required for operation and sold separately.** Choose from a variety of lengths below.

► **Lead Cable Length** (must choose one)

- ☐ 6' Lead Cable w/RJ Connector - WR-SEN-WT-4C-006
- ☐ 15' Lead Cable w/RJ Connector - WR-SEN-WT-4C-015
- ☐ 25' Lead Cable w/RJ Connector - WR-SEN-WT-4C-025
- ☐ 35' Lead Cable w/RJ Connector - WR-SEN-WT-4C-035
- ☐ 60' Lead Cable w/RJ Connector - WR-SEN-WT-4C-060

► **Accessories**

See Accessories Section of the I-CON catalog or contact our Customer Service Team for details.

Specifications

- Specifically designed for penal use
- Rugged, polished stainless steel housing with no internal moving parts makes the unit virtually vandal-proof
- Proven reliability with testing of over 1 million activations
- Unique design allows activation by finger pressure without compromising its sealing integrity
- Proprietary 5V DC design allowing for no power consumption until touched by operator.
- Ability to be remotely located up to three hundred (300) feet from the associated controller
- Telephone type connectors for quick and easy connection to controller
- Meets all ADA requirements
- IP 68 Protection
- Operating temperature range from -40F to 257F

This space is for Architect/Engineer approval

The information contained in this document is subject to change without notice.

I-CON Systems, Inc. • 3100 Camp Road, Oviedo, FL 32765 • Toll Free (800) 240-3578 • Fax (407) 365-7944 • www.i-con.com

©2012 I-CON Systems, Inc. One or more products contained herein are protected by U.S. Patent with other undergoing the patent process. Printed in the U.S.A. JAN 2012/01

Vandal Resistant Low Flow Aerator with Dual Interlocking Technology

FXR-LAV-AER-1000 Series

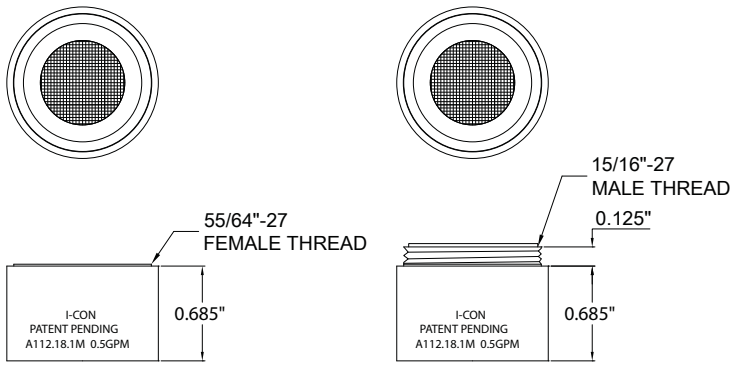

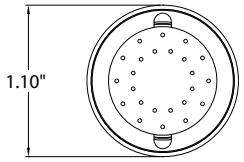

Patent Pending.

► **Description**

The I-CON Vandal Resistant Low Flow Aerator is designed for high security areas. It's patented Dual Interlocking Technology provides an added level of security requiring an I-CON master key for removal while maintaining a 0.5 GPM flow control for increased water conservation.

► **Housing Options** (choose one)

☐ Male thread
☐ Female thread

Specifications

- Vandal Resistant
- Dual Interlocking Technology
- 0.5 GPM flow rate meets ASRAE standards for energy conservation
- Self Cleaning/Maintenance Free
- Low Noise - not to exceed 20 Dbs at 50PSI
- Spray Stream Pattern to provide full coverage and improved wetting.
- Full metal construction for maximum durability.

► **Accessories**

See Accessories Section of the I-CON catalog or contact our Customer Service Team for details.

This space is for Architect/Engineer approval

The information contained in this document is subject to change without notice.

I-CON Systems, Inc. • 3100 Camp Road, Oviedo, FL 32765 • Toll Free (800) 240-3578 • Fax (407) 365-7944 • www.i-con.com

©2014 I-CON Systems, Inc. One or more products contained herein are protected by U.S. Patent with other undergoing the patent process. Printed in the U.S.A. AUG 2016/08

MOMENTUM® Flush Valve Rebuild Kit

EUC-RKT-3801

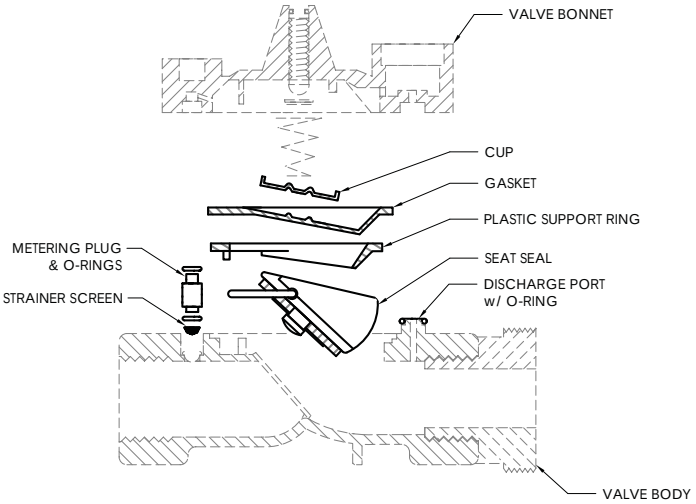

EXPLODED SIDE VIEW

Description

A complete internal rebuild kit for the 1" MOMENTUM® Flush Valve. This kit will rebuild all I-CON series 3700 and 3800 model MOMENTUM® Flush Valves. Kit includes the valve's seat seal, a 3801 model flush valve support ring *(marked with "38" on the left & "SR" on the right side of a rib found on the arc of the ring)*, a 3711 model flush valve support ring, pressure separation gasket, metering plug and o-rings, strainer screen, discharge port o-ring and stand cup allowing for the rebuilt valve to meet the standards of a new MOMENTUM® Flush Valve.

Specifications

- (1) one Cup
- (1) one Gasket
- (1) one 3801 Model Plastic Support Ring
  Marked with "38" & "SR" on each side of rib on arc.
- (1) one 3711 Model Plastic Support Ring
- (1) one Seat Seal
- (2) two Metering Plug O-Rings
- (1) one Metering Plug
- (1) one Strainer Screen
- (1) one Discharge Port O-Ring

Accessories

See Accessories Section of the I-CON catalog or contact our Customer Service Team for details.

This space is for Architect/Engineer approval

The information contained in this document is subject to change without notice.

I-CON Systems, Inc. • 3100 Camp Road, Oviedo, FL 32765 • Toll Free (800) 240-3578 • Fax (407) 365-7944 • www.i-con.com

©2012 I-CON Systems, Inc. One or more products contained herein are protected by U.S. Patent with other undergoing the patent process. Printed in the U.S.A. JAN 2012/01

5775 Series Shower Valve Rebuild Kit

EUC-RKT-5775

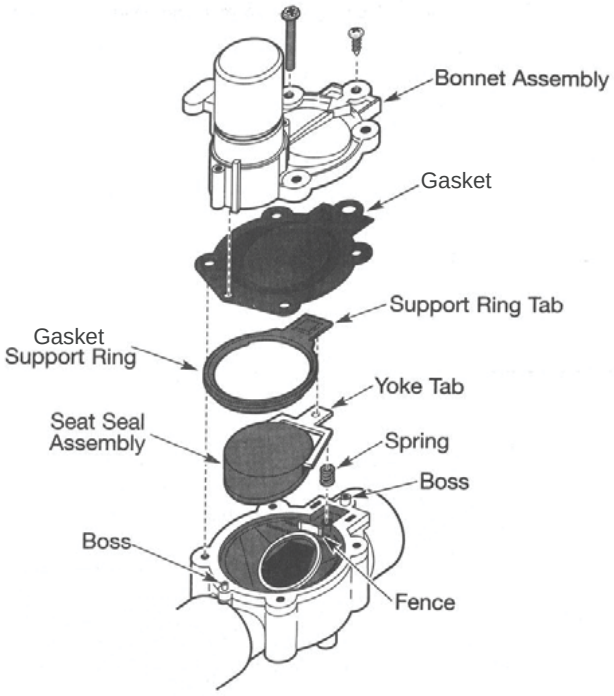

Description

A complete internal rebuild kit for the I-CON 5775 Series Shower Valve. Kit includes the valve's seat seals, pressure separation gasket and miscellaneous small parts allowing for the rebuilt valve to meet the standards of a new I-CON 5775 Series Shower Valve.

Specifications

- (1) one Seat Seal Assembly
- (1) one Pressure Separation Gasket
- (1) one Support Ring
- (1) one Spring
- (2) two Screws

Accessories

See Accessories Section of the I-CON catalog or contact our Customer Service Team for details.

This space is for Architect/Engineer approval

The information contained in this document is subject to change without notice.

I-CON Systems, Inc. • 3100 Camp Road, Oviedo, FL 32765 • Toll Free (800) 240-3578 • Fax (407) 365-7944 • www.i-con.com

©2012 I-CON Systems, Inc. One or more products contained herein are protected by U.S. Patent with other undergoing the patent process. Printed in the U.S.A. JAN 2012/01

ELEMENT® Manifold Flow Regulator Assembly

EUC-RKT-4820

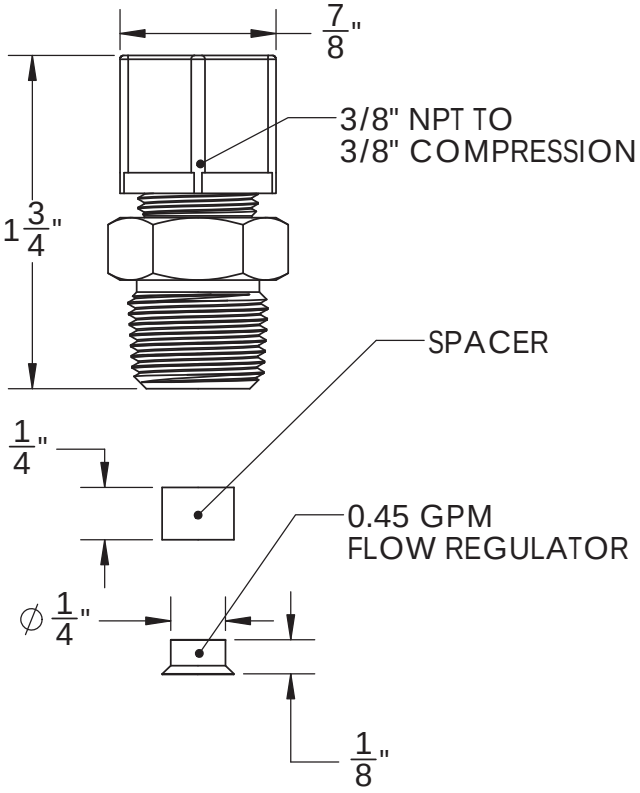

Description

A complete replacement of flow regulator assembly for ELEMENT® lavatory manifolds.

Specifications

- Flow regulator allows .45 gallons per minute recommendad for lavatory fixture.

Accessories

See Accessories Section of the I-CON catalog or contact our Customer Service Team for details.

This space is for Architect/Engineer approval

The information contained in this document is subject to change without notice.

I-CON Systems, Inc. • 3100 Camp Road, Oviedo, FL 32765 • Toll Free (800) 240-3578 • Fax (407) 365-7944 • www.i-con.com

©2017 I-CON Systems, Inc. One or more products contained herein are protected by U.S. Patent with other undergoing the patent process. Printed in the U.S.A. FEB 2017/10

Core Drill Assembly

MHW-CDA Series

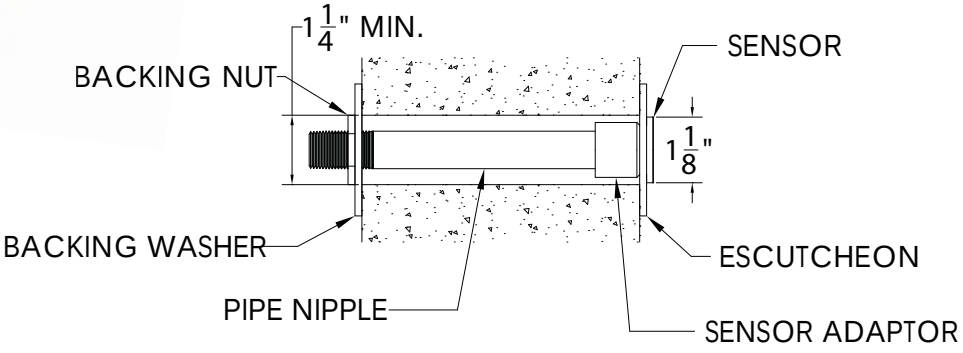

► **Description**
I-CON's Core Drill Assembly is used when there is no access to the rear of the fixture from the chase area or when controlling a water closet fixture set by itself. When retrofitting older style lavatory valves, the unit can be used to secure the fixture to the wall when the older lavatory valve and push buttons are removed.

► **Pipe Nipple Length** (choose one)
☐ 1" ☐ 2" ☐ 4" ☐ 5" ☐ 6" ☐ 8"
☐ 9" ☐ 10" ☐ 12"

► **Escutcheon Diameter** (choose one)
☐ 2-3/8" ☐ 2-7/8" ☐ 4" ☐ 6"

► **Backing Support** (choose one)
☐ 2" Backing Washer
☐ 7-3/4" Wide Backing Bar

► **Accessories**
See Accessories Section of the I-CON catalog or contact our Customer Service Team for details.

Specifications
- Stainless Steel Housing
- Part number will vary according to application and wall thicknesses

This space is for Architect/Engineer approval

The information contained in this document is subject to change without notice.

I-CON Systems, Inc. • 3100 Camp Road, Oviedo, FL 32765 • Toll Free (800) 240-3578 • Fax (407) 365-7944 • www.i-con.com

©2017 I-CON Systems, Inc. One or more products contained herein are protected by U.S. Patent with other undergoing the patent process. Printed in the U.S.A. JUL 2017/05

Polyurethane Tubing

MHW-TB Series

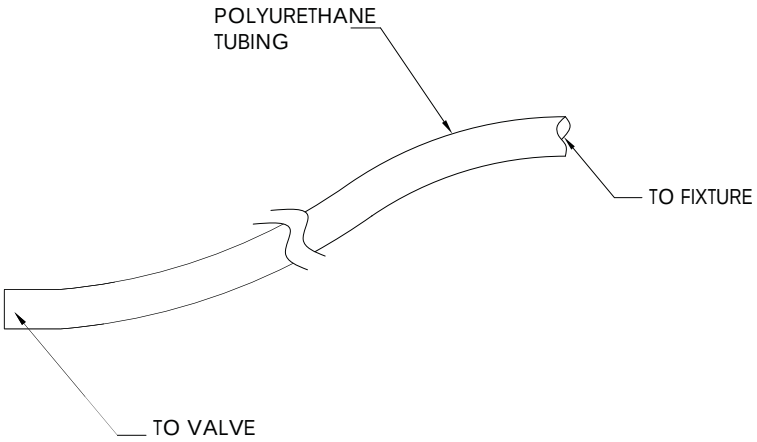

Description

The I-CON Polyurethane Tubing is used to transfer water from the I-CON valve to the fixture.

Specifications

- Polyurethane Tubing
- Flexible for Installation

Tubing Sizes Available (choose one or more)

- ☐ 1/4" OD; 1/8" ID; 1/16" Wall
- ☐ 3/8" OD; 1/4" ID, 1/16" Wall
- ☐ 1/2" OD; 3/8" ID; 1/16" Wall
- ☐ 5/8" OD; 1/2" ID; 1/16" Wall

Accessories

See Accessories Section of the I-CON catalog or contact our Customer Service Team for details.

This space is for Architect/Engineer approval

The information contained in this document is subject to change without notice.

I-CON Systems, Inc. • 3100 Camp Road, Oviedo, FL 32765 • Toll Free (800) 240-3578 • Fax (407) 365-7944 • www.i-con.com

©2017 I-CON Systems, Inc. One or more products contained herein are protected by U.S. Patent with other undergoing the patent process. Printed in the U.S.A. JUL 2017/18

Anti Blowout Grip Ring

MHW-VB-5011-ABR

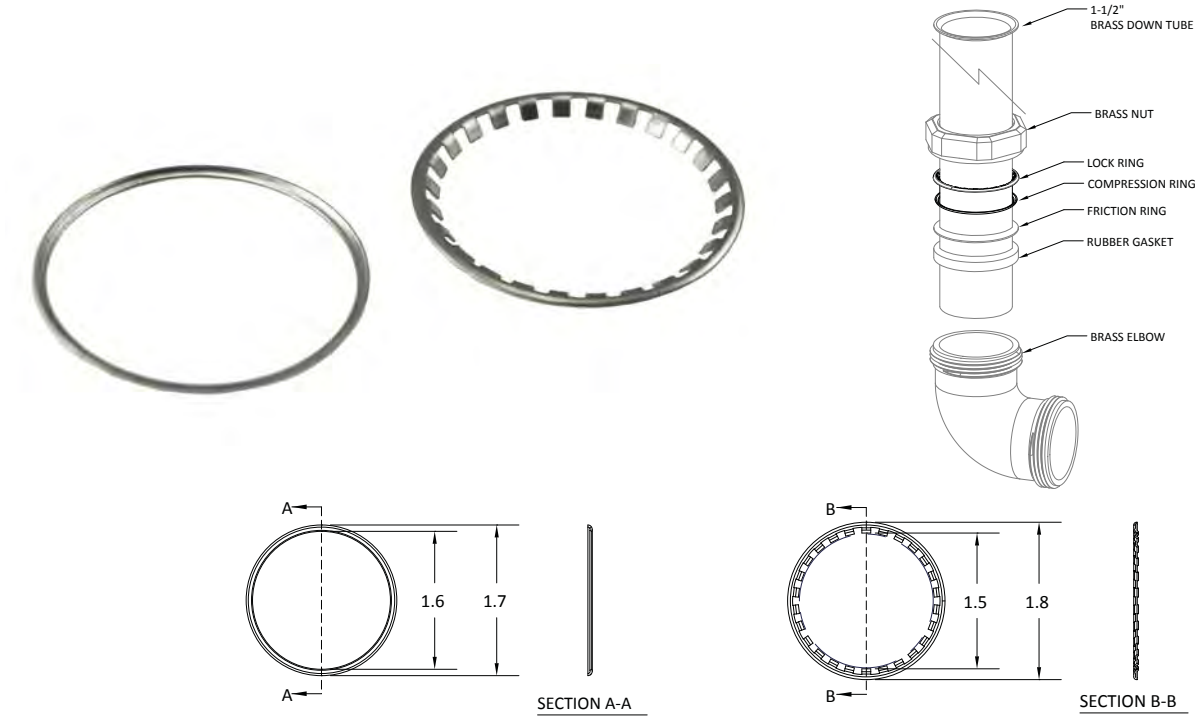

Description

I-CON's Anti Blowout Grip Ring is designed to reduce blowout failures by increasing the holding force of a common slip joint. The two ring assembly is comprised of a lock ring with 26 teeth that bite and lock into the down tube when compressed by the compression ring. *Note: Anti Blowout Grip Rings are packaged (12) ring sets per pack.*

Specifications

- Made of stainless steel for increased strength and corrosion resistance.
- Designed for use on chrome plated, raw brass and all scratch threaded 1-1/2" vacuum breaker tubes.

Accessories

See Accessories Section of the I-CON catalog or contact our Customer Service Team for details.

This space is for Architect/Engineer approval

The information contained in this document is subject to change without notice.

I-CON Systems, Inc. • 3100 Camp Road, Oviedo, FL 32765 • Toll Free (800) 240-3578 • Fax (407) 365-7944 • www.i-con.com

©2012 I-CON Systems, Inc. One or more products contained herein are protected by U.S. Patent with other undergoing the patent process. Printed in the U.S.A. JUL 2017/05

TruFIRE® Model 24VAC Solenoids

SLD-0914 Series

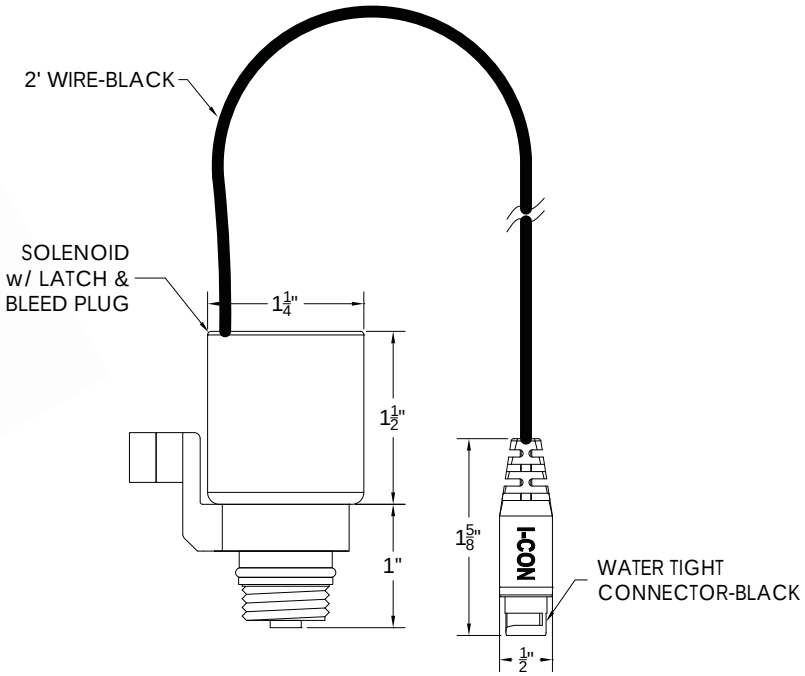

► **Description**
The I-CON TruFIRE® 24VAC Solenoid attaches to and operates any of the I-CON flush valves, lavatory valves, shower valves, and retrofit cartridges.

► **Standard Flow** (choose one)
- ☐ with No Extension (Extension Required for Use)
- ☐ 6' Extension
- ☐ 15' Extension
- ☐ 25' Extension
- ☐ 35' Extension
- ☐ 60' Extension

Specifications
- Voltage - 24VAC 50/60Hz
- Inrush Current - 0.25 AMP
- Holding Current - 0.18 AMP
- Closing Type - Slow Closing with Soft Close Feature
- Sealing Surface - EPDM
- Max. Operating Pressure - 100 PSI
- Min. Operating Pressure - Positive Close
- Max. Fluid Temperature - 120°F

► **Accessories**
See Accessories Section of the I-CON catalog or contact our Customer Service Team for details.

This space is for Architect/Engineer approval

The information contained in this document is subject to change without notice.

I-CON Systems, Inc. • 3100 Camp Road, Oviedo, FL 32765 • Toll Free (800) 240-3578 • Fax (407) 365-7944 • www.i-con.com

©2012 I-CON Systems, Inc. One or more products contained herein are protected by U.S. Patent with other undergoing the patent process. Printed in the U.S.A. MAR 2017/17

Box Mount Model
24 Volt Transformer

EC-TRS-BM-120V Series

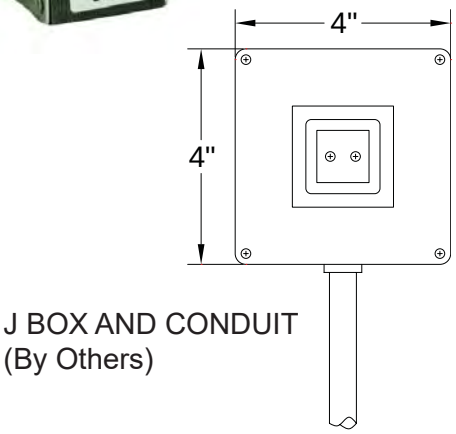

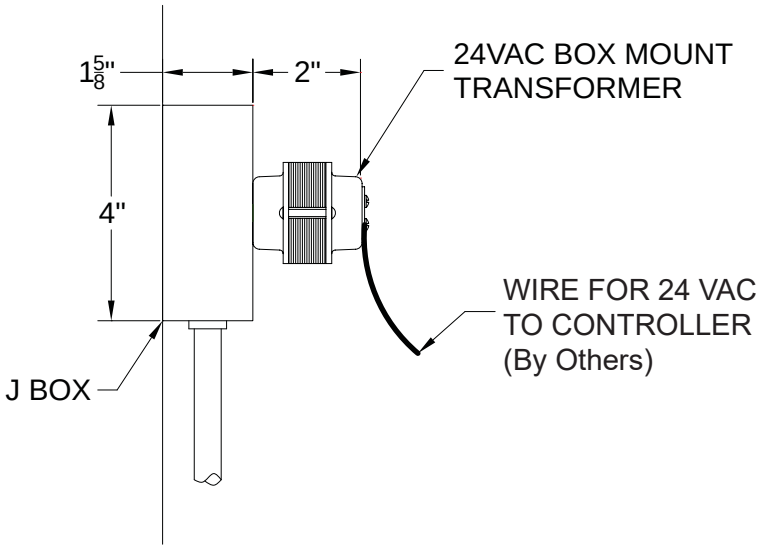

► **Description**

The Box Mount Transformer is designed to be hardwired and mounted in a standard 4” x 4” electrical junction Box.

► **Amperage**

1.00 Amp (40 VA) for use with two (2) 4 I/O controllers or one (1) 8 I/O controller

Specifications

- Converts 120VAC, 60 Hz to 24 VAC, 60 Hz
- Unit is Class 2, internally fused
- Mounts in any 1/2” knock out located on the side of a typical electrical box
- UL listed, UL file number: E32963
- Operating temperature range from -40F to 230F

► **Accessories**

For additional accessories, see the Accessories Section of the I-CON catalog or contact our Customer Service Team for details.

This space is for Architect/Engineer approval

The information contained in this document is subject to change without notice.

I-CON Systems, Inc. • 3100 Camp Road, Oviedo, FL 32765 • Toll Free (800) 240-3578 • Fax (407) 365-7944 • www.i-con.com

©2012 I-CON Systems, Inc. One or more products contained herein are protected by U.S. Patent with other undergoing the patent process. Printed in the U.S.A. JAN 2012/01

Buck & Boost Transformer

TRS-BB Series

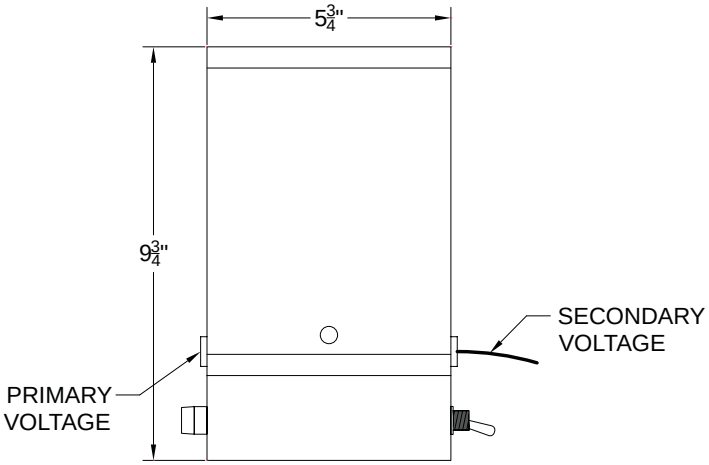

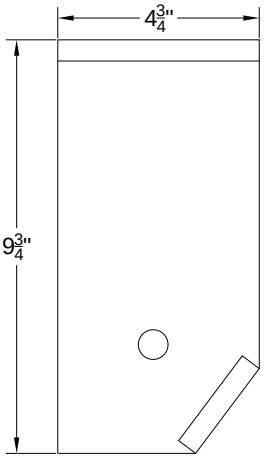

Description

The TRS-BB series of transformer assemblies are designed to provide power to multiple I-CON electronic plumbing controllers. The number of controllers the transformer can power varies by controller size and configuration.

Primary Voltage & Rating Options (choose one)

	Primary Voltage	Capacity	Max Primary Current	Max Secondary Current	Part Number
☐	120VAC	0.5kVA	4.2A	17.9A	TRS-BB-120/240V-0.50KVA-28
☐	120VAC	1.0kVA	8.4A	35.7A	TRS-BB-120/240V-1.00KVA-28
☐	240VAC	0.5kVA	2.1A	17.9A	TRS-BB-120/240V-0.50KVA-28
☐	240VAC	1.0kVA	4.2A	35.7A	TRS-BB-120/240V-1.00KVA-28
☐	277VAC	0.5kVA	2.1A	20.8A	TRS-BB-277V-0.50KVA-28
☐	277VAC	1.0kVA	4.2A	41.7A	TRS-BB-277V-1.00KVA-28
☐	208VAC	0.5kVA	2.1A	15.6A	TRS-BB-208V-0.50KVA-28
☐	208VAC	1.0kVA	4.2A	31.A	TRS-BB-208V-1.00KVA-28

Specifications

- Primary Voltage 120 / 240 / 277 / 208VAC, 60Hz
- KVA Ratings .50, 1.00
- Secondary Voltage 28VAC
- Box Dimensions 10” H x 6” W x 5” D

Transformer Selection & Installation Considerations

- Choose the appropriate capacity. Budget roughly 0.15A for each controller and 0.17A for each simultaneously operated solenoid.
- Choose appropriate heavy gauge wire for secondary side distribution, considering voltage drop along the wire as well as current carrying capacity.
- The number of controllers that can be powered from a single transformer is often limited by the voltage drop along the wire. In most operating conditions, there must be at least 22VAC available at the controller for reliable solenoid operation.
- Locate the transformer as close as practical to the controllers minimizing the length of the 28VAC distribution wires.
- Consult with an I-CON representative for assistance in choosing the best transformer solution for your needs.

Accessories

For additional accessories, see the Accessories Section of the I-CON catalog or contact our Customer Service Team for details.

This space is for Architect/Engineer approval

The information contained in this document is subject to change without notice.

I-CON Systems, Inc. • 3100 Camp Road, Oviedo, FL 32765 • Toll Free (800) 240-3578 • Fax (407) 365-7944 • www.i-con.com

©2017 I-CON Systems, Inc. One or more products contained herein are protected by U.S. Patent with other undergoing the patent process. Printed in the U.S.A. NOV 2017/11

Plug-In Model
28 Volt Transformer

TRS-PI-120V-1.5A

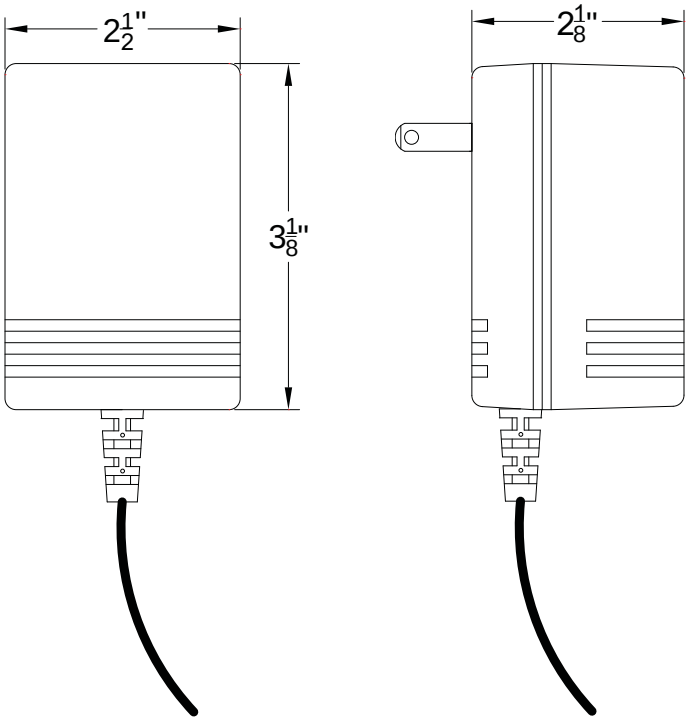

► **Description**

The Plug-In Transformer is designed to be plugged into a standard two-pronged receptacle.

► **Amperage**

1.50 Amp (1500mA) for use with all controllers.

Specifications

- Converts 120VAC, 60 Hz to 28 VAC, 60 Hz Unit
- Unit is Class 2, internally fused
- UL listed, UL file number: E82323
- Operating temperature range from -40F to 230F

► **Accessories**

See Accessories Section of the I-CON catalog or contact our Customer Service Team for details.

This space is for Architect/Engineer approval

The information contained in this document is subject to change without notice.

I-CON Systems, Inc. • 3100 Camp Road, Oviedo, FL 32765 • Toll Free (800) 240-3578 • Fax (407) 365-7944 • www.i-con.com

©2017 I-CON Systems, Inc. One or more products contained herein are protected by U.S. Patent with other undergoing the patent process. Printed in the U.S.A. MAR 2015/03

Savings Calculations

ECM #6 Central Chilled Water Plant Upgrade

SCI Houtzdale - Proposed Chilled Water Model

Month	Average Load (tons)	Days	Monthly Load (tons-hrs)	Total Load (Kw/ton)	Monthly Electricity (KWh)
January	-	31	-	-	7,440
Febuary	-	28	-	-	6,720
March/April	-	51	-	-	12,240
April	200	10	48,000	0.65	31,200
May	300	31	223,200	0.67	149,544
June	450	30	324,000	0.75	243,000
July	550	31	409,200	0.77	315,084
August	500	31	372,000	0.85	316,200
September	350	30	252,000	0.77	194,040
October	250	20	120,000	0.75	90,000
November/Oct	-	41	-	-	9,840
December	-	31	-	-	7,440
Total					**1,382,748**

Month	Chiller Load (Kw/ton)	Cooling Towers (Kw/ton)	Distribution Pumps (Kw/ton)	Condenser Pumps (Kw/ton)	Total Load (Kw/ton)
January	-	-	-	-	-
Febuary	-	-	-	-	-
March	-	-	-	-	-
April	0.25	0.10	0.20	0.10	0.65
May	0.27	0.10	0.20	0.10	0.67
June	0.35	0.10	0.20	0.10	0.75
July	0.37	0.10	0.20	0.10	0.77
August	0.45	0.10	0.20	0.10	0.85
September	0.37	0.10	0.20	0.10	0.77
October	0.35	0.10	0.20	0.10	0.75
November	-	-	-	-	-
December	-	-	-	-	-

Assumptions

1) Chillers operate May thru September and part of April and October
2) Peak design cooling load is estimated at 700 tons. Normal summer peak is 600 tons.
3) Two chillers operate at one time, one is stand-by.
4) 20 HP CT fan, 25 HP pump, 50 HP pump.

Equipment Specifications Sheets

ECM #6 Central Chilled Water Plant Upgrade

Technical Data Sheet for WSC-400

Job Information	*Technical Data Sheet*
Job Name	Houtzdale Prison
Date	10/15/2018
Submitted By	Dan Sawron
Software Version	13.90
Unit Tag	WSC-400
Country of Origin	USA

Unit Overview

Model Number	Net Capacity ton	NPLV.IP kW/ton	Voltage	Starter Type
WSC087L	400.0	0.5489	4160 V / 60 Hz / 3 Ph	Fixed Speed

Unit

Model Number:	WSC087LBBC0320M20/E2612-UD2C-2/C2612-WE2C-2/R134-BAABB-U	**Vintage:**	B
Approval:	AHRI and ETL / cETL		
Vessel Code:	ASME		
Unit Shipping Weight:	12692 lb	**Unit Operating Weight:**	14316 lb

Compressor Quantity	Capacity Control	Refrigerant Type	Refrigerant Weight
1	Inlet Guide Vanes	R134a	766 lb

Evaporator

Entering Fluid Temperature	Leaving Fluid Temperature	Fluid Type	Actual Fluid Flow	Minimum Fluid Flow
60.00 °F	45.00 °F	Water	638.6 gpm	223.2 gpm

Length	Diameter	Number of Passes	Tube		Fouling Factor
			Material	Wall Thickness	
12 ft	26 in	2	Copper	0.025 in	0.000100 °F.ft².h/Btu

Condenser

Entering Fluid Temperature	Leaving Fluid Temperature	Fluid Type	Fluid Flow
85.00 °F	94.30 °F	Water	1199 gpm

Length	Diameter	Number of Passes	Tube		Fouling Factor
			Material	Wall Thickness	
12 ft	26 in	2	Copper	0.025 in	0.000250 °F.ft².h/Btu

Unit Performance (AHRI 550/590)

Design Points Rated with AHRI Condenser Relief

Net Capacity ton	Input kW	Cooling Efficiency kW/ton	RLA A	NPLV.IP kW/ton	Part Load Cooling Efficiency			Evaporator Fluid		Condenser Fluid	
					75% kW/ton	50% kW/ton	25% kW/ton	Pressure Drop ft H_2O	Entering Temperature °F	Pressure Drop ft H_2O	Leaving Temperature °F
400.0	225.9	0.5648	36	0.5489	0.5081	0.5490	0.7610	16.8	60.00	11.8	94.30

Most Comprehensive Offering for HVAC Applications

Butterfly Valve

BELIMO

The Belimo Advantage

Butterfly Valves are fundamental components in large hydronic systems. Unfortunately, most butterfly valves are less than ideal – they leak, their running times are not optimized for HVAC applications, they are heavy, it's hard to access wiring, and they cannot be put into operation quickly.

Belimo's butterfly valve series are the exception; with a complete range of resilient seat, grooved, and high-performance butterfly valve assemblies, sizes from 2" to 24", and variety of actuator control signal inputs to meet all your needs. Belimo assemblies offer zero leakage along with NEMA 2 or 4X rated actuator enclosures, designed to provide ease of installation, application flexibility, longevity, and reliability. Fail-safe actuators are available on butterfly valves up to 12" for emergency control sequences. Typical applications include chiller and boiler isolation, cooling tower isolation, summer/winter change-over control, large air handler coil control and primary bypass to maintain minimum water flow to a chiller or boiler plant.

Resilient Seated Butterfly Valves Efficient Solution

Belimo HD/L series lug resilient seated butterfly valves are designed to meet the needs of HVAC and commercial applications requiring zero leakage. The large Cv values provide an economical control valve solution for larger flow applications used in ANSI flanged piping systems. The technologically advanced L series butterfly valve assembly is designed specifically for HVAC applications; it offers an intelligent, energy efficient, and reliable high flow solution with a focus on ease of installation, application flexibility, and longevity.

- Manual handles available for isolation applications
- Saves energy with up to 80% less power consumption with PR/PKR actuator than currently available solutions
- Zero leakage improves system performance with self-adjusting actuator close-off and unique seat and disc design ensures positive valve sealing while maintaining low seating torque on 2-way models
- Easy troubleshooting with the PR/PKR unique position indicator, viewable from long distances and any angle
- Elongated valve neck provides thermal isolation to reduce heat transfer and condensation build-up on the actuator
- EPDM valve liner provides superior close-off and lower torque requirements

Sizes: 2" to 24" (2-way & 3-way)

ANSI 125/150 flange design

Stainless steel disc and stem standard

Ductile iron ASTM A536

Close off up to 200 psi

Media temp -22°F to 250°F [-30°C to 120°C]

Grooved Butterfly Valves Quick and Easy Connections without Welding

Grooved Victaulic butterfly valve series are engineered and manufactured for dependable, trouble-free performance offering superior flow control and durable, long-lasting reliability. The unique design of the offset disc provides increased flow with a longer life expectancy than most conventional valves, due to the tapered disc engaging the seat only at the beginning or end of the stroke.

- No welding is required making it a perfect retrofit solution for buildings where welding is not allowed
- Quick and easy connections with fewer bolts to tighten and no loose parts offering faster installation
- Full bi-directional shut-off and dead-end service capabilities to the full pressure rated up to 300 psi
- Cartridge style seat incorporates an elastomer bonded to a phenolic stabilizing ring, eliminating elastomer movement and reducing seat tearing or fatiguing due to bunching
- Five bushing design completely isolates the valve shaft from the body, resulting in increased control of the valve disc, lower valve seating torque, and longer valve life

Sizes: 2" to 12" (2-way & 3-way)
Grooved ANSI / AWWA (C606)
Electrolysis nickel coated disc and stainless steel stem
Ductile iron ASTM A536, 300-pound body
Close off 200 psi (for most combinations)
Media temp -22°F to 250°F [-30°C to 120°C]

High-Performance Butterfly Valves Precise Control for High-Velocity Applications

SHP butterfly valve assemblies are designed for high-performance shut-off, modulating and isolation service. The machined seat design and blow out proof solid shaft provides better torque consistency which results in longer actuator life and leakage rating Class IV per ASME FCI 70-2. Designed for use in ANSI Class 150 and ANSI Class 300 piping systems and supplied standard lug style body designs with range abilities of 100:1, 0% leakage ratings, and a maximum valve velocity of 32 FPS. Configurations are available for harsh conditions and applications requiring nominal pressure and temperature ratings.

- Underbody seat and double offset, disc design ensures positive valve sealing to ensure leak free performance
- Machined seat design and blow out proof solid shaft provides better torque consistency
- Steam service to 50 psi inlet pressure
- Unique seat and disc design provides bi-directional bubble-tight shutoff at rated pressure/temperatures
- Soft seat design ensures self-energized seal with minimal wear
- Full lug body design cast in carbon steel for superior performance

Sizes: 2" to 30" (2-way & 3-way)
ASME/ANSI 150 or ASME/ANSI 300
Stainless steel disc and stainless steel stem
Carbon steel full lug
Close off 285 or 600 psi
Media temp -22°F to 400°F [-30°C to 200°C]

Intelligent Butterfly Valve Assemblies

The resilient seated, grooved, and high-performance butterfly valve with PR actuator series are designed specifically to meet the needs of HVAC applications requiring zero leakage. The assemblies provide simplified setup, diagnostics and superior application data access with BACnet and Near Field Communication built-in.

Configuration		Size		Resilient Seat		Grooved		High Performance	
		Inches	DN	Non Fail-Safe	Fail-Safe	Non Fail-Safe	Fail-Safe	Non Fail-Safe	Fail-Safe
2-Way	3-Way	2	50	■	■	■	■	■	■
		2½	65	■	■	■	■	■	■
		3	80	■	■	■	■	■	■
		4	100	■	■	■	■	■	■
		5	125	■	■	■	■	■	■
		6	150	■	■	■	■	■	■
		8	200	■	■	■		■	
		10	250	■	■	■		■	
		12	300	■	■	■		■	
		14	350	■	■			■	
		16	400	■	■			■	
		18	450	■	■			■	
		20	500	■	■			■	
		24	600	■	■			■	

■ Available with PR and or PKR actuation offering:

- 100% duty cycle rating for increased actuator life
- Saves energy with up to 80% less power consumption and reduces transformer and wiring costs
- Self-adjusting close-off design provides zero leakage and improves system performance
- Industry leading fail-safe function and universal power supply input 24-240 VAC / 24-125 VDC provides application flexibility
- Unique position indication is viewable from long distances and any angle for easy troubleshooting
- BACnet and NFC provide simplified setup and diagnostics, as well as superior application data access

5 YEAR WARRANTY · GLOBAL SUPPORT · TESTED QUALITY · ON TIME DELIVERY · WWW EXTENSIVE SERVICE

Belimo Americas

USA, Latin America, and the Caribbean: www.belimo.us
Canada: www.belimo.ca
Brazil: www.belimo.com.br

Belimo Worldwide: www.belimo.com

BELIMO

P. 01/18 - Subject to change. © Belimo Aircontrols (USA), Inc.

A36 Immersion Probes w/ nylon fitting

Temperature Sensors

Rev. 12/12/16

Features & Options

- Probe Lengths: 2", 4" & 8" (fit standard BAPI Thermowell lengths)
- Series 304 Stainless Steel Probes and three Enclosure Styles
- Double Encapsulated Sensors & Etched Teflon Leadwires

Immersion Units are available in 2", 4" and 8" probe lengths. The sensor is potted inside a 1/4" stainless steel probe with thermally conductive compound.

All Immersion Units have etched Teflon leadwires and double encapsulated sensors to create a watertight package that can withstand high humidity and condensation.

Immersion Units come standard with a 2"x4" steel J-Box but are also available with the metal Weatherproof enclosure or the new BAPI-Box Crossover enclosure.

J-Box (Standard)

BAPI-Box Crossover (BBX or BBX6)

The BAPI-Box Crossover

The new BAPI-Box Crossover enclosure features a hinged cover with thumb latch for easy termination. It is available with a pierceable knockout plug for the open port and a watertight gasket for the cover.

(Shown with optional plug and gasketed cover.)

BAPI Thermowells

Immersion Unit Probes are designed to be inserted into a Thermowell. For more info on Thermowells, see page A40.

Specifications

Environmental Operation Range:
Temperature:
BAPI-Box Crossover: -40 to 85 °C
Other Enclosures: -40 to 100 °C
Humidity: 0 to 100%, non-condensing

Sensing Element:
Thermistor or RTD (See Sensors Section for Specs.)

Probe Material:
Stainless Steel, 1/4" diameter

Enclosure Material:
Junction Box: Galvanized Steel
BAPI-Box Crossover:
UV-resistant polycarbonate, UL94, V-0

Enclosure Rating:
Junction Box: IP20, NEMA 1
BAPI-Box Crossover (BBX): IP10, NEMA 1
BAPI-Box Crossover (BBX6): IP66, NEMA 4X

Encl. Dimensions: H x W x D
BAPI-Box Crossover:
3.1 x 2.2 x 1.9" (79 x 56 x 49mm)
Junction Box
4.2 x 3.9 x 1.94" (106 x 98.4 x 49mm)

(For enclosure dimension drawings, see the end of the section.)

Building Automation Products, Inc. • 750 North Royal Avenue, Gays Mills, WI 54631 USA
Tel: +1-608-735-4800 • Fax: +1-608-735-4804 • Email: sales@bapihvac.com • Web: www.bapihvac.com

Use the Option Selection Guide below to create your custom part number. Replace the number and parenthesis with the designator for each selection. Skip the designator and dashes for optional selections that are not required in your configuration.

Immersion Sensor Option Selection Guide

BA/ (**#1**) - (**#2**) - (**#3**) - (**#4**)

#1: Temperature Sensor (required)

1.8K ..... 1.8K Thermistor
3K ..... 3K Thermistor
10K-2 ..... 10K-2 Thermistor
10K-3 ..... 10K-3 Thermistor
10K-3[11K] ..... 10K-3[11K] Thermistor
20K ..... 20K Thermistor

1K[375] ..... 1K Platinum RTD (375 curve)
1K[NI] ..... 1K Ω Nickel RTD
1K ..... 1K Platinum RTD (385 curve)

Transmitters below require a BAPI-Box Crossover Enclosure
T1K[32 TO 212F] ..... 1K Plat. RTD Transmitter, 4 to 20 mA Output, 32 to 212°F Range
T1K[20 TO 120F] ..... 1K Plat. RTD Transmitter, 4 to 20 mA Output, 20 to 120°F Range
T1K[0 TO 100F] ..... 1K Plat. RTD Transmitter, 4 to 20 mA Output, 0 to 100°F Range

T1K[0 TO 100C] ..... 1K Plat. RTD Transmitter, 4 to 20 mA Output, 0 to 100°C Range
T1K[-7 TO 49C] ..... 1K Plat. RTD Transmitter, 4 to 20 mA Output, -7 to 49°C Range
T1K[-18 TO 38C] ..... 1K Plat. RTD Transmitter, 4 to 20 mA Output, -18 to 38°C Range

Matched Transmitters are also available. Contact your BAPI representative for ordering.

#2: Probe Type and Length (required)

I-2" ..... Immersion, 2" (51mm) length
I-4" ..... Immersion, 4" (102mm) length
I-8" ..... Immersion, 8" (203mm) length

#3: Enclosure and Lead Length (optional, comes standard with Junction Box)

BBX ..... BAPI-Box Crossover (IP10, NEMA 1)
BBX6 ..... BAPI-Box Crossover with Gasket and Knockout Plug (IP66, NEMA 4X)

#4: Test & Balance or Terminal Strip (optional, requires a BAPI-Box Crossover Enclosure)

TB ..... Test & Balance Switch
TS ..... Terminal Strip Connection

Additional options are available for these units but not shown in this Selection Guide. Contact your BAPI representative for the complete list of options. Submittal sheets without List Prices can be downloaded from our website at www.bapihvac.com

Example Number: BA/ (**10K-2**) - (**I-2"**) - (**BBX6**) - ( )

Actual Number (with parenthesis removed): BA/10K-2-I-2"-BBX66

Description: 10K-2 Thermistor, Immersion Sensor, BAPI-Box Crossover (IP66), No Test and Balance or Terminal Strip.

Your Number: BA/

STANDARD TYPE 1 ENCLOSURE WITH KEYED LOCK

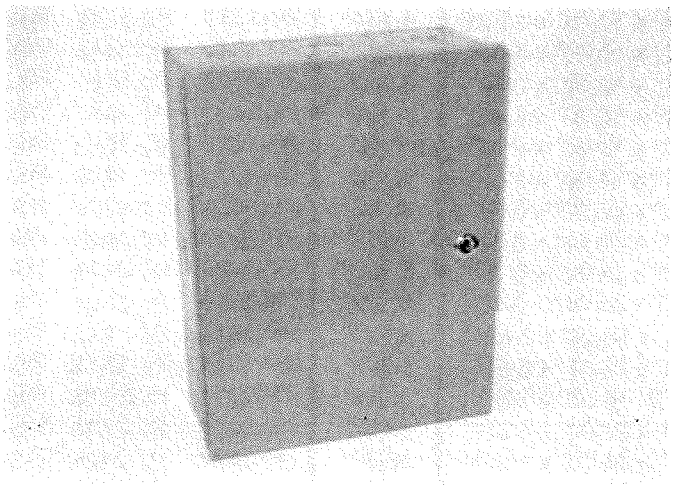

Industry Standards
UL 50, Type 1
Nema Type 1

UL LISTED c UL
UL File E235575

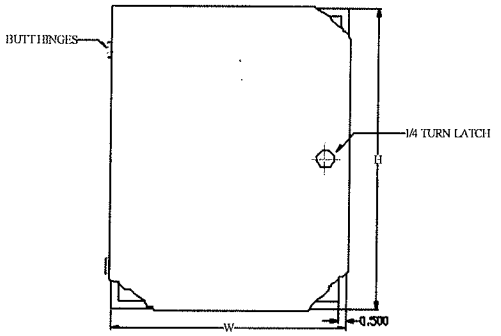

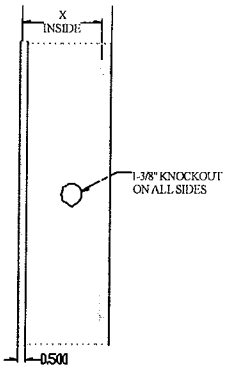

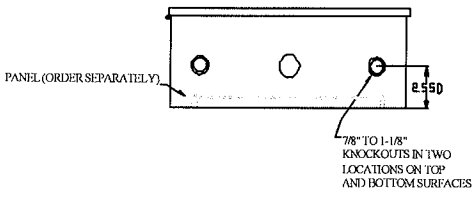

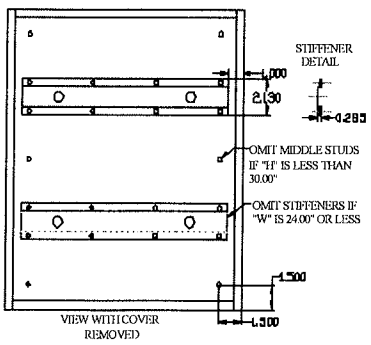

OPTIONS: * THE FOLLOWING KNOCKOUT SIZES ARE AVAILABLE AS SPECIAL ORDER ITEMS:

- ½" TO ¾"
- ¾" TO 1"
- 1" TO 1-¼"

PLEASE CALL FOR DETAILS

STANDARD TYPE 1 ENCLOSURE WITH KEYED LOCK						
CATALOG NUMBER	BODY/DOOR STEEEL GAUGE	ENCLOSURE SIZE H x W x D	X	BACK PANEL OPTIONS SEE BACK PANEL PAGES FOR SPECIFICATIONS		
N1-080604K	16/16	8.00" x 6.00" x 4.00"	3.362"	PP-0806	P2-0806	PS-0806
N1-100804K	16/16	10.00" x 8.00" x 4.00"	3.362"	PP-1008	P2-1008	PS-1008
N1-121204K	16/16	12.00" x 12.00" x 4.00"	3.362"	PP-1212	P2-1212	PS-1212
N1-171205K	16/16	17.375" x 12.75" x 5.625"	4.987"	PP-1712	P2-1712	PS-1712
N1-121006K	16/16	12.00" x 10.00" x 6.00"	5.362"	PP-1210	P2-1210	PS-1210
N1-121206K	16/16	12.00" x 12.00" x 6.00"	5.362"	PP-1212	P2-1212	PS-1212
N1-141206K	16/16	14.00" x 12.00" x 6.00"	5.362"	PP-1412	P2-1412	PS-1412
N1-161206K	16/16	16.00" x 12.00" x 6.00"	5.362"	PP-1612	P2-1612	PS-1612
N1-181606K	16/16	18.00" x 16.00" x 6.00"	5.362"	PP-1816	P2-1816	PS-1816
N1-182006K	16/16	18.00" x 20.00" x 6.00"	5.362"	PP-1820	P2-1820	PS-1820
N1-242006K	16/14	24.00" x 20.00" x 6.00"	5.362"	PP-2420	P2-2420	PS-2420
N1-242406K	16/14	24.00" x 24.00" x 6.00"	5.362"	PP-2424	P2-2424	PS-2424
N1-362406K	14/14	36.00" x 24.00" x 6.00"	5.362"	PP-3624	P2-3624	PS-3624
N1-161206DK	16/16	16.00" x 12.00" x 6.625"	5.987"	PP-1612	P2-1612	PS-1612
N1-161606DK	16/16	16.00" x 16.00" x 6.625"	5.987"	PP-1616	P2-1616	PS-1616
N1-201606DK	16/16	20.00" 16.00" 6.625"	5.987"	PP-2016	P2-2016	PS-2016
N1-242006DK	16/14	24.00" x 20.00" x 6.625"	5.987"	PP-2420	P2-2420	PS-2420
N1-242406DK	16/14	24.00" x 24.00" x 6.625"	5.987"	PP-2424	P2-2424	PS-2424
N1-302406DK	16/14	30.00" x 24.00" x 6.625"	5.987"	PP-3024	P2-3024	PS-3024
N1-362406DK	14/14	36.00" x 24.00" x 6.625"	5.987"	PP-3624	P2-3624	PS-3624
N1-121208K	16/16	12.00" x 12.00" x 8.00"	7.362"	PP-1212	P2-1212	PS-1212
N1-141208K	16/16	14.00" x 12.00" x 8.00"	7.362"	PP-1412	P2-1412	PS-1412
N1-242408DK	16/14	24.00" x 24.00" x 8.625"	7.987"	PP-2424	P2-2424	PS-2424
N1-302408DK	16/14	30.00" x 24.00" x 8.625"	7.987"	PP-3024	P2-3024	PS-3024
N1-362408DK	14/14	36.00" x 24.00" x 8.625"	7.987"	PP-3624	P2-3624	PS-3624
N1-242009K	16/14	24.00" x 20.00" x 9.375"	8.737"	PP-2420	P2-2420	PS-2420
N1-242409K	16/14	24.00" x 24.00" x 9.375"	8.737"	PP-2424	P2-2424	PS-2424
N1-362409K	14/14	36.00" x 24.00" x 9.375"	8.737"	PP-3624	P2-3624	PS-3624
N1-353009K	14/14	35.00" x 30.00" x 9.375"	8.737"	PP-3530	P2-3530	PS-3530
N1-423609K	14/14	42.00" x 36.00" x 9.375"	8.737"	PP-4236	P2-4236	PS-4236
N1-493009K	14/14	49.25" x 30.00" x 9.375"	8.737"	PP-4930	P2-4930	PS-4930
N1-242412K	16/14	24.00" x 24.00" x 12.625"	11.987"	PP-2424	P2-2424	PS-2424
N1-302412K	14/14	30.00" x 24.00" x 12.625"	11.987"	PP-3024	P2-3024	PS-3024
N1-362412K	14/14	36.00" x 24.00" x 12.625"	11.987"	PP-3624	P2-3624	PS-3624

Applications: Designed for indoor applications which do not have oil-tight and dust-tight requirements.

Construction:
* Steel fabricated doors and enclosures
* Doors secured with butt hinges and keyed quarter turn latch
* Mounting holes supplied on back of enclosure
* Enclosure design allows mounting with doors opening either left or right
* Standoffs provided for mounting of optional back panels
* Various sizes of knockouts are supplied on all four sides of the enclosure

Finish:
* ANSI-61 gray powder coat
* Optional colors available, please call for details

Accessories:
* Back panels (see reference tables)

TYPE 1 ENCLOSURE WITH CONTINUOUS HINGE AND KEYED LOCK

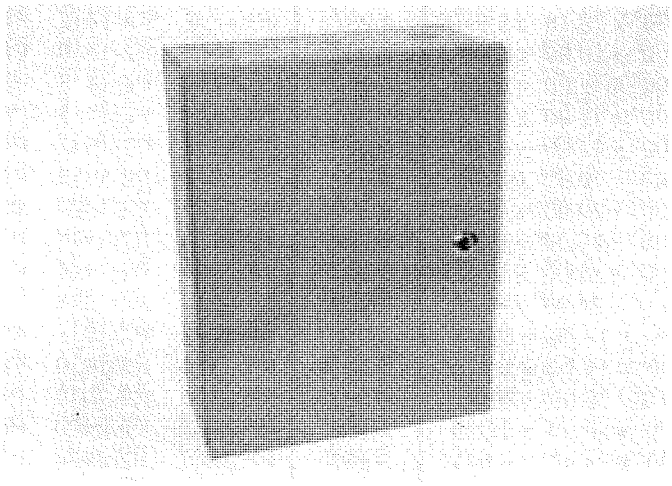

Industry Standards
UL 50, Type 1
Nema Type 1

UL LISTED c UL
UL File E235575

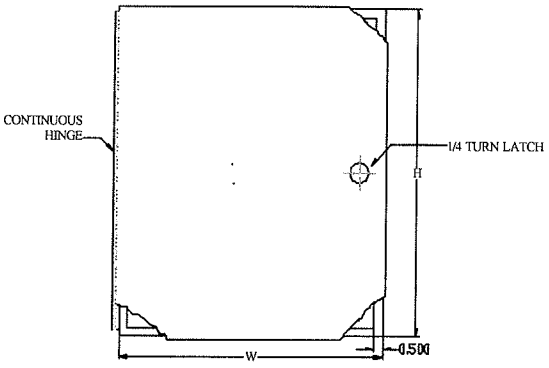

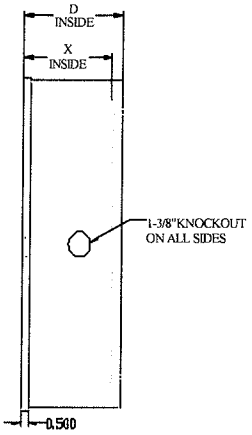

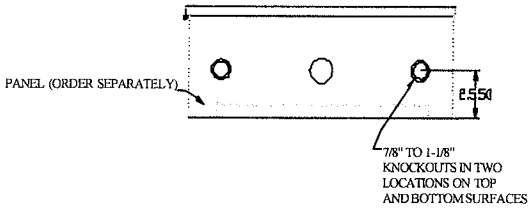

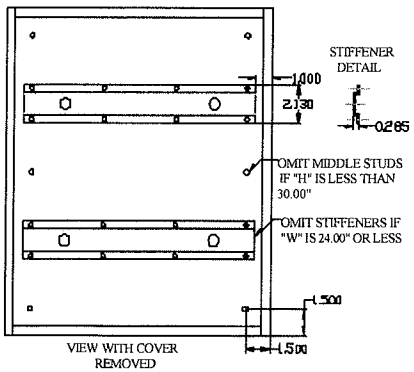

OPTIONS: * THE FOLLOWING KNOCKOUT SIZES ARE AVAILABLE AS SPECIAL ORDER ITEMS:

- ½" TO ¾"
- ¾" TO 1"
- 1" TO 1-¼"

PLEASE CALL FOR DETAILS

TYPE 1 ENCLOSURE WITH CONTINUOUS HINGE AND KEYED LOCK						
CATALOG NUMBER	BODY/DOOR STEEEL GAUGE	ENCLOSURE SIZE H x W x D	X	BACK PANEL OPTIONS SEE BACK PANEL PAGES FOR SPECIFICATIONS		
N1C-080604K	16/16	8.00" x 6.00" x 4.00"	3.362"	PP-0806	P2-0806	PS-0806
N1C-100804K	16/16	10.00" x 8.00" x 4.00"	3.362"	PP-1008	P2-1008	PS-1008
N1C-121204K	16/16	12.00" x 12.00" x 4.00"	3.362"	PP-1212	P2-1212	PS-1212
N1C-171205K	16/16	17.375" x 12.75" x 5.625"	4.987"	PP-1712	P2-1712	PS-1712
N1C-121006K	16/16	12.00" x 10.00" x 6.00"	5.362"	PP-1210	P2-1210	PS-1210
N1C-121206K	16/16	12.00" x 12.00" x 6.00"	5.362"	PP-1212	P2-1212	PS-1212
N1C-141206K	16/16	14.00" x 12.00" x 6.00"	5.362"	PP-1412	P2-1412	PS-1412
N1C-161206K	16/16	16.00" x 12.00" x 6.00"	5.362"	PP-1612	P2-1612	PS-1612
N1C-181606K	16/16	18.00" x 16.00" x 6.00"	5.362"	PP-1816	P2-1816	PS-1816
N1C-182006K	16/16	18.00" x 20.00" x 6.00"	5.362"	PP-1820	P2-1820	PS-1820
N1C-242006K	16/14	24.00" x 20.00" x 6.00"	5.362"	PP-2420	P2-2420	PS-2420
N1C-242406K	16/14	24.00" x 24.00" x 6.00"	5.362"	PP-2424	P2-2424	PS-2424
N1C-362406K	14/14	36.00" x 24.00" x 6.00"	5.362"	PP-3624	P2-3624	PS-3624
N1C-161206DK	16/16	16.00" x 12.00" x 6.625"	5.987"	PP-1612	P2-1612	PS-1612
N1C-161606DK	16/16	16.00" x 16.00" x 6.625"	5.987"	PP-1616	P2-1616	PS-1616
N1C-201606DK	16/16	20.00" 16.00" 6.625"	5.987"	PP-2016	P2-2016	PS-2016
N1C-242006DK	16/14	24.00" x 20.00" x 6.625"	5.987"	PP-2420	P2-2420	PS-2420
N1C-242406DK	16/14	24.00" x 24.00" x 6.625"	5.987"	PP-2424	P2-2424	PS-2424
N1C-302406DK	16/14	30.00" x 24.00" x 6.625"	5.987"	PP-3024	P2-3024	PS-3024
N1C-362406DK	14/14	36.00" x 24.00" x 6.625"	5.987"	PP-3624	P2-3624	PS-3624
N1C-121208K	16/16	12.00" x 12.00" x 8.00"	7.362"	PP-1212	P2-1212	PS-1212
N1C-141208K	16/16	14.00" x 12.00" x 8.00"	7.362"	PP-1412	P2-1412	PS-1412
N1C-242408DK	16/14	24.00" x 24.00" x 8.625"	7.987"	PP-2424	P2-2424	PS-2424
N1C-302408DK	16/14	30.00" x 24.00" x 8.625"	7.987"	PP-3024	P2-3024	PS-3024
N1C-362408DK	14/14	36.00" x 24.00" x 8.625"	7.987"	PP-3624	P2-3624	PS-3624
N1C-242009K	16/14	24.00" x 20.00" x 9.375"	8.737"	PP-2420	P2-2420	PS-2420
N1C-242409K	16/14	24.00" x 24.00" x 9.375"	8.737"	PP-2424	P2-2424	PS-2424
N1C-362409K	14/14	36.00" x 24.00" x 9.375"	8.737"	PP-3624	P2-3624	PS-3624
N1C-353009K	14/14	35.00" x 30.00" x 9.375"	8.737"	PP-3530	P2-3530	PS-3530
N1C-423609K	14/14	42.00" x 36.00" x 9.375"	8.737"	PP-4236	P2-4236	PS-4236
N1C-493009K	14/14	49.25" x 30.00" x 9.375"	8.737"	PP-4930	P2-4930	PS-4930
N1C-242412K	16/14	24.00" x 24.00" x 12.625"	11.987"	PP-2424	P2-2424	PS-2424
N1C-302412K	14/14	30.00" x 24.00" x 12.625"	11.987"	PP-3024	P2-3024	PS-3024
N1C-362412K	14/14	36.00" x 24.00" x 12.625"	11.987"	PP-3624	P2-3624	PS-3624

Applications: Designed for indoor applications which do not have oil-tight and dust-tight requirements.

Construction:
* Steel fabricated doors and enclosures
* Doors secured with continuous hinges and keyed quarter turn latch
* Mounting holes supplied on back of enclosure
* Enclosure design allows mounting with doors opening either left or right
* Standoffs provided for mounting of optional back panels
* Various sizes of knockouts are supplied on all four sides of the enclosure

Finish:
* ANSI-61 gray powder coat
* Optional colors available, please call for details

Accessories:
* Back panels (see reference tables)

TYPE 1 ENCLOSURE WITH LIFT-OFF HINGES AND KEYED LOCK

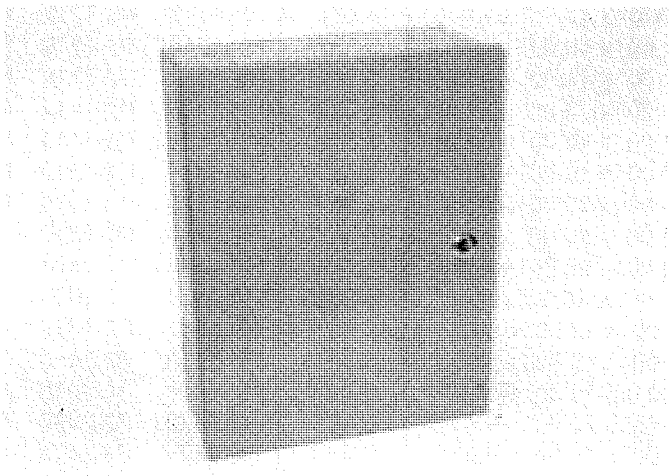

Industry Standards
UL 50, Type 1
Nema Type 1

UL File E235575

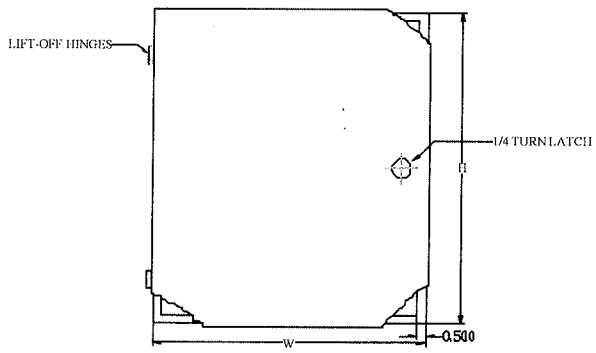

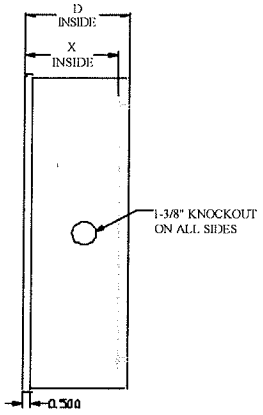

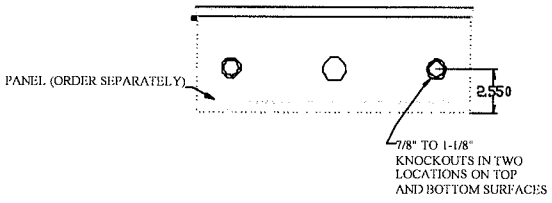

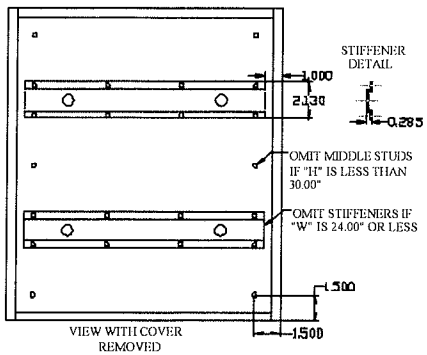

OPTIONS: * THE FOLLOWING KNOCKOUT SIZES ARE AVAILABLE AS SPECIAL ORDER ITEMS:

- $\frac{1}{2}$" TO $\frac{3}{4}$"
- $\frac{3}{4}$" TO 1"
- 1" TO 1-$\frac{1}{4}$"

PLEASE CALL FOR DETAILS

TYPE 1 ENCLOSURE WITH LIFT-OFF HINGES AND KEYED LOCK						
CATALOG NUMBER	BODY/DOOR STEEEL GAUGE	ENCLOSURE SIZE H x W x D	X	BACK PANEL OPTIONS SEE BACK PANEL PAGES FOR SPECIFICATIONS		
N1LR-080604K	16/16	8.00" x 6.00" x 4.00"	3.362"	PP-0806	P2-0806	PS-0806
N1LR-100804K	16/16	10.00" x 8.00" x 4.00"	3.362"	PP-1008	P2-1008	PS-1008
N1LR-121204K	16/16	12.00" x 12.00" x 4.00"	3.362"	PP-1212	P2-1212	PS-1212
N1LR-171205K	16/16	17.375" x 12.75" x 5.625"	4.987"	PP-1712	P2-1712	PS-1712
N1LR-121006K	16/16	12.00" x 10.00" x 6.00"	5.362"	PP-1210	P2-1210	PS-1210
N1LR-121206K	16/16	12.00" x 12.00" x 6.00"	5.362"	PP-1212	P2-1212	PS-1212
N1LR-141206K	16/16	14.00" x 12.00" x 6.00"	5.362"	PP-1412	P2-1412	PS-1412
N1LR-161206K	16/16	16.00" x 12.00" x 6.00"	5.362"	PP-1612	P2-1612	PS-1612
N1LR-181606K	16/16	18.00" x 16.00" x 6.00"	5.362"	PP-1816	P2-1816	PS-1816
N1LR-182006K	16/16	18.00" x 20.00" x 6.00"	5.362"	PP-1820	P2-1820	PS-1820
N1LR-242006K	16/14	24.00" x 20.00" x 6.00"	5.362"	PP-2420	P2-2420	PS-2420
N1LR-242406K	16/14	24.00" x 24.00" x 6.00"	5.362"	PP-2424	P2-2424	PS-2424
N1LR-362406K	14/14	36.00" x 24.00" x 6.00"	5.362"	PP-3624	P2-3624	PS-3624
N1LR-161206DK	16/16	16.00" x 12.00" x 6.625"	5.987"	PP-1612	P2-1612	PS-1612
N1LR-161606DK	16/16	16.00" x 16.00" x 6.625"	5.987"	PP-1616	P2-1616	PS-1616
N1LR-201606DK	16/16	20.00" 16.00" 6.625"	5.987"	PP-2016	P2-2016	PS-2016
N1LR-242006DK	16/14	24.00" x 20.00" x 6.625"	5.987"	PP-2420	P2-2420	PS-2420
N1LR-242406DK	16/14	24.00" x 24.00" x 6.625"	5.987"	PP-2424	P2-2424	PS-2424
N1LR-302406DK	16/14	30.00" x 24.00" x 6.625"	5.987"	PP-3024	P2-3024	PS-3024
N1LR-362406DK	14/14	36.00" x 24.00" x 6.625"	5.987"	PP-3624	P2-3624	PS-3624
N1LR-121208K	16/16	12.00" x 12.00" x 8.00"	7.362"	PP-1212	P2-1212	PS-1212
N1LR-141208K	16/16	14.00" x 12.00" x 8.00"	7.362"	PP-1412	P2-1412	PS-1412
N1LR-242408DK	16/14	24.00" x 24.00" x 8.625"	7.987"	PP-2424	P2-2424	PS-2424
N1LR-302408DK	16/14	30.00" x 24.00" x 8.625"	7.987"	PP-3024	P2-3024	PS-3024
N1LR-362408DK	14/14	36.00" x 24.00" x 8.625"	7.987"	PP-3624	P2-3624	PS-3624
N1LR-242009K	16/14	24.00" x 20.00" x 9.375"	8.737"	PP-2420	P2-2420	PS-2420
N1LR-242409K	16/14	24.00" x 24.00" x 9.375"	8.737"	PP-2424	P2-2424	PS-2424
N1LR-362409K	14/14	36.00" x 24.00" x 9.375"	8.737"	PP-3624	P2-3624	PS-3624
N1LR-353009K	14/14	35.00" x 30.00" x 9.375"	8.737"	PP-3530	P2-3530	PS-3530
N1LR-423609K	14/14	42.00" x 36.00" x 9.375"	8.737"	PP-4236	P2-4236	PS-4236
N1LR-493009K	14/14	49.25" x 30.00" x 9.375"	8.737"	PP-4930	P2-4930	PS-4930
N1LR-242412K	16/14	24.00" x 24.00" x 12.625"	11.987"	PP-2424	P2-2424	PS-2424
N1LR-302412K	14/14	30.00" x 24.00" x 12.625"	11.987"	PP-3024	P2-3024	PS-3024
N1LR-362412K	14/14	36.00" x 24.00" x 12.625"	11.987"	PP-3624	P2-3624	PS-3624

NOTE: REPLACE THE LR IN THE PART NUMBER WITH LL FOR LEFT OPENING DOORS WITH LIFT-OFF HINGES.

Applications: Designed for indoor applications which do not have oil-tight and dust-tight requirements.

Construction:
* Steel fabricated doors and enclosures
* Doors secured with lift-off hinges and keyed quarter turn latch
* Mounting holes supplied on back of enclosure
* Enclosure/Door design allows doors to be removed
* Standoffs provided for mounting of optional back panels
* Various sizes of knockouts are supplied on all four sides of the enclosure

Finish:
* ANSI-61 gray powder coat
* Optional colors available, please call for details

Accessories:
* Back panels (see reference tables)

PERFORATED BACK PANELS	
CATALOG NUMBER	PANEL SIZE A x B
PP-0806	6.00" x 4.00"
PP-1008	8.00" x 6.00"
PP-1210	10.00" x 8.00"
PP-1212	10.00" x 10.00"
PP-1412	12.00" x 10.00"
PP-1612	14.00" x 10.00"
PP-1616	14.00" x 14.00"
PP-1712	15.375" x 10.75"
PP-1816	16.00" x 14.00"
PP-1820	16.00" x 18.00"
PP-2016	18.00" x 14.00"
PP-2420	22.00" x 18.00"
PP-2424	22.00" x 22.00"
PP-3024	28.00" x 22.00"
PP-3530	33.00" x 28.00"
PP-3624	34.00" x 22.00"
PP-4236**	40.00" x 34.00"
PP-4930**	47.25" x 28.00"

** 12 GA CARBON STEEL

DESCRIPTION:

*14 GAUGE CARBON STEEL (UNLESS OTHERWISE NOTED)
*WHITE POWDER COAT
*FULLY PERFORATED

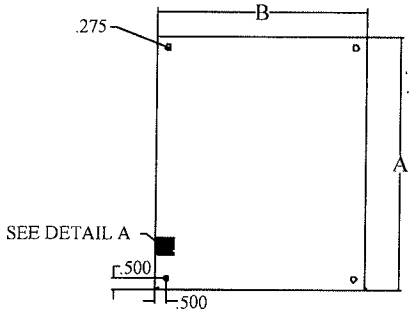

2" ON CENTER BACK PANELS	
CATALOG NUMBER	PANEL SIZE A x B
P2-0806	6.00" x 4.00"
P2-1008	8.00" x 6.00"
P2-1210	10.00" x 8.00"
P2-1212	10.00" x 10.00"
P2-1412	12.00" x 10.00"
P2-1612	14.00" x 10.00"
P2-1616	14.00" x 14.00"
P2-1712	15.375" x 10.75"
P2-1816	16.00" x 14.00"
P2-1820	16.00" x 18.00"
P2-2016	18.00" x 14.00"
P2-2420	22.00" x 18.00"
P2-2424	22.00" x 22.00"
P2-3024	28.00" x 22.00"
P2-3530	33.00" x 28.00"
P2-3624	34.00" x 22.00"
P2-4236**	40.00" x 34.00"
P2-4930**	47.25" x 28.00"

** 12 GA CARBON STEEL

DESCRIPTION:

*14 GAUGE CARBON STEEL (UNLESS OTHERWISE NOTED)
*WHITE POWDER COAT
*HOLES SPACED 2" ON CENTER

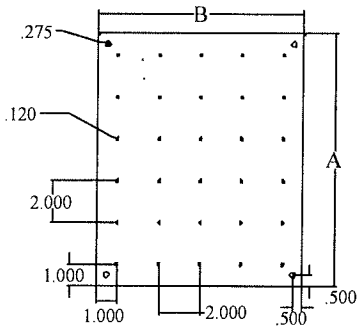

SOLID BACK PANELS	
CATALOG NUMBER	PANEL SIZE A x B
PS-0806	6.00" x 4.00"
PS-1008	8.00" x 6.00"
PS-1210	10.00" x 8.00"
PS-1212	10.00" x 10.00"
PS-1412	12.00" x 10.00"
PS-1612	14.00" x 10.00"
PS-1616	14.00" x 14.00"
PS-1712	15.375" x 10.75"
PS-1816	16.00" x 14.00"
PS-1820	16.00" x 18.00"
PS-2016	18.00" x 14.00"
PS-2420	22.00" x 18.00"
PS-2424	22.00" x 22.00"
PS-3024	28.00" x 22.00"
PS-3530	33.00" x 28.00"
PS-3624	34.00" x 22.00"
PS-4236**	40.00" x 34.00"
PS-4930**	47.25" x 28.00"

** 12 GA CARBON STEEL

DESCRIPTION:

*14 GAUGE CARBON STEEL (UNLESS OTHERWISE NOTED)
*WHITE POWDER COAT

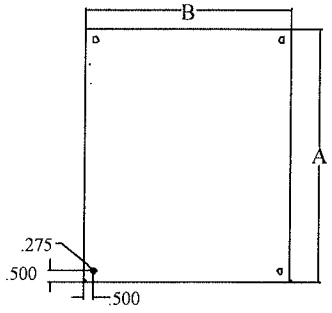

DETAIL A

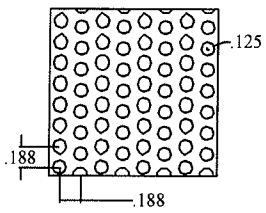

TYPE 1 ENCLOSURE WITH SCREW COVER

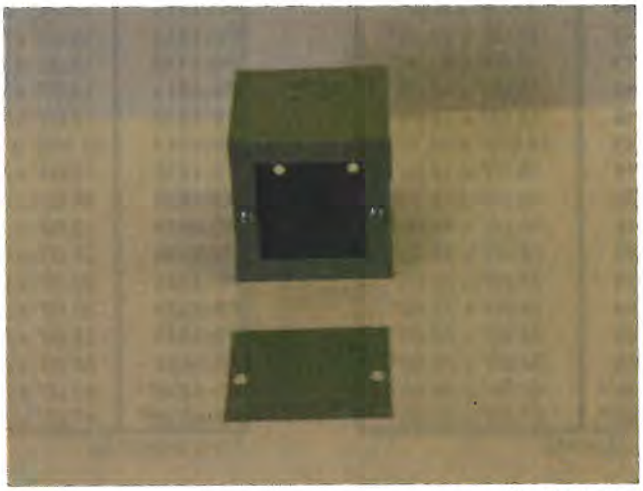

Industry Standards
UL 50, Type 1
Nema Type 1

UL File E235575

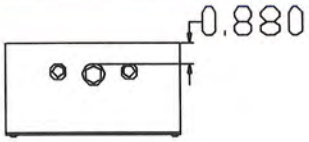

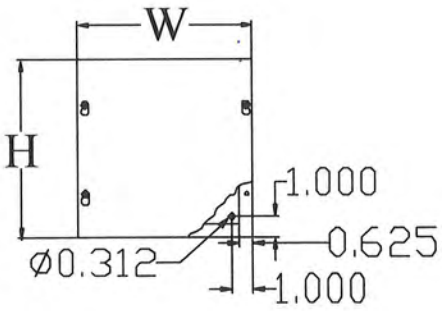

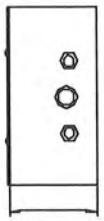

INSIDE

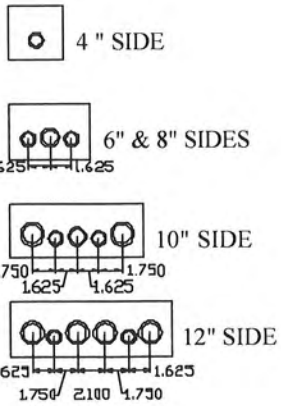

KNOCKOUT PATTERNS
A- ½" TO ¾"
B- ¾" TO 1"
C- 1" TO 1-¼"

TYPE 1 ENCLOSURE WITH SCREW COVER		
CATALOG NUMBER	BODY/DOOR STEEL GAUGE	ENCLOSURE SIZE H x W x D
SC-040404	16/16	4.00" x 4.00" x 4.00"
SC-060604	16/16	6.00" x 6.00" x 4.00"
SC-080804	16/16	8.00" x 8.00" x 4.00"
SC-101004	16/16	10.00" x 10.00" x 4.00"
SC-121204	16/16	12.00" x 12.00" x 4.00"
SC-060606	16/16	6.00" x 6.00" x 6.00"
SC-080806	16/16	8.00" x 8.00" x 6.00"
SC-101006	16/16	10.00" x 10.00" x 6.00"
SC-121206	16/16	12.00" x 12.00" x 6.00"

Applications: Designed for use as a junction box and pull box in general indoor applications

Construction:
* Steel fabricated enclosure and cover
* Mounting holes supplied on back of enclosure
* Various sizes of knockouts are supplied on all four sides of the enclosure
* Cover design allows for removal without fully removing screws

Finish:
* ANSI-61 gray powder coat
* Optional colors available, please call for details

F-1000 Series
Turbine Flow Meters

Chilled Water • Hot Water • Domestic Water

ONICON's F-1000 Series is a family of insertion and inline turbine flow meters that provide accurate measurement over a wide flow range in pipe sizes ranging from ¾" to 72" in diameter. They are an excellent value when measuring water flow in clean closed loop systems.

ONICON
Flow and Energy Measurement

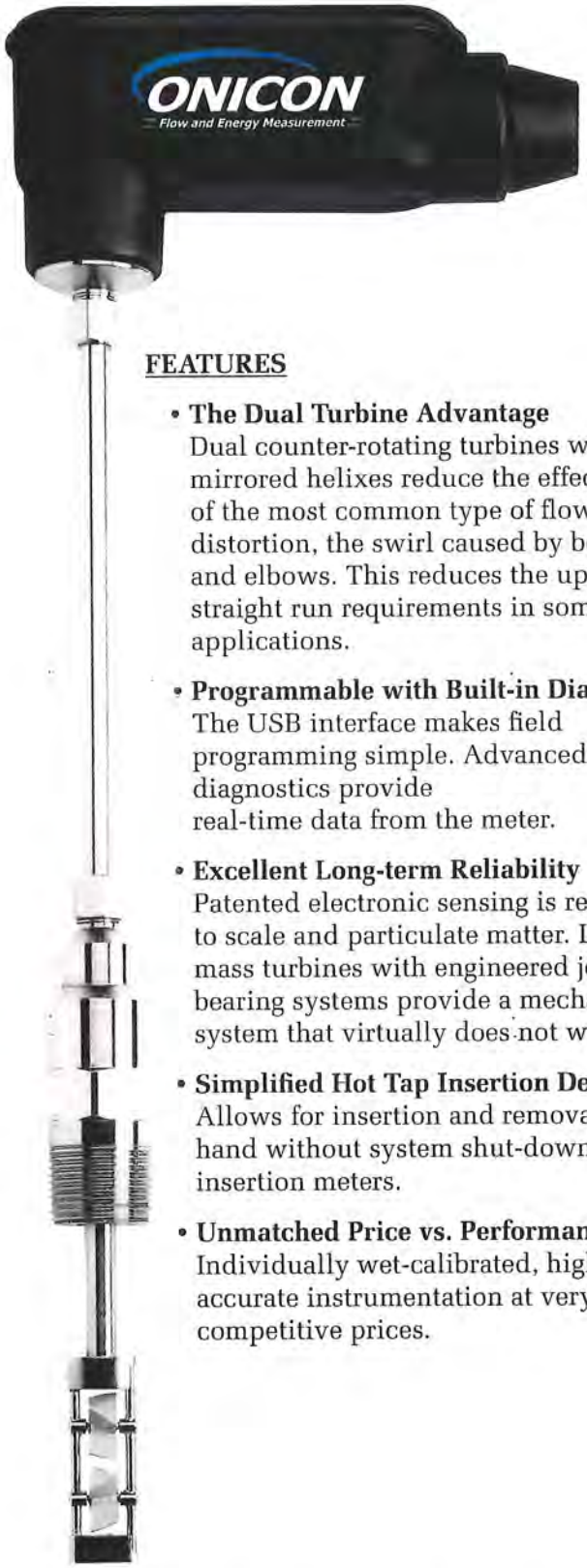

FEATURES

- **The Dual Turbine Advantage**
  Dual counter-rotating turbines with mirrored helixes reduce the effects of the most common type of flow distortion, the swirl caused by bends and elbows. This reduces the upstream straight run requirements in some applications.
- **Programmable with Built-in Diagnostics**
  The USB interface makes field programming simple. Advanced diagnostics provide real-time data from the meter.
- **Excellent Long-term Reliability**
  Patented electronic sensing is resistant to scale and particulate matter. Low mass turbines with engineered jewel bearing systems provide a mechanical system that virtually does not wear.
- **Simplified Hot Tap Insertion Design**
  Allows for insertion and removal by hand without system shut-down for insertion meters.
- **Unmatched Price vs. Performance**
  Individually wet-calibrated, highly accurate instrumentation at very competitive prices.

DESCRIPTION

ONICON's F-1000 Series is a family of insertion and inline style turbine meters flow meters that provide accurate, reliable flow measurement in a variety of applications. The F-1000 Series meters are suitable for use in pipes ranging in size from ¾ to 72" in diameter. Each model utilizes ONICON's patented electronic turbine rotation sensing system and unique low mass turbine design that is accurate over wide flow ranges with excellent low flow measurement capability.

THREE DIFFERENT STYLES

- F-1100 single turbine insertion meters
  Suitable for use in 1¼ - 72" pipes
- F-1200 dual turbine insertion meters
  Suitable for use in 2½ - 72" pipes
- F-11XX single turbine inline meters
  Available as ¾ and 1" meters.

APPLICATIONS

- Chilled water or hot water & water/glycol solutions for HVAC
- Domestic/municipal water
- Clean process water

CALIBRATION

Every F-1000 series meter is wet-calibrated using N.I.S.T.[1] traceable standards. A certificate of calibration is provided with each meter.

Axially mounted turbines riding on sapphire bearings virtually eliminate the mechanical load on the tungsten carbide shaft on which they ride.

[1] - National Institute of Standards and Technology

11451 Belcher Road South, Largo, FL 33773 • USA • Tel +1 (727) 447-6140 • Fax +1 (727) 442-5699
www.onicon.com • sales@onicon.com

THREE DIFFERENT OUTPUT VERSIONS

Frequency & Scaled Pulse/Alarm Outputs
This version provides a high-resolution frequency output and a scaled pulse output for totalizing flow. The frequency output allows for connection to ONICON Btu meters or displays. The scaled pulse output may also be configured as an alarm.

Frequency, Analog & Scaled Pulse/Alarm Outputs
This version provides a high-resolution frequency output, an analog output for flow rate and a scaled pulse output for totalizing flow. The frequency output allows for connection to ONICON Btu meters or displays. The scaled pulse output may also be configured as an alarm.

Frequency, Isolated Analog & Scaled Pulse/Alarm Outputs
This version provides a high-resolution frequency output, an isolated analog output for flow rate and a scaled pulse output for totalizing flow. The frequency output allows for connection to ONICON Btu meters or displays. The scaled pulse output may also be configured as an alarm.

OPERATING RANGE FOR COMMON PIPE SIZES
0.17 TO 20 ft/s
±2% accuracy begins at 0.4 ft/s

Pipe Size (Inches)	Flow Rate (GPM)
¾	0.4 - 38
1	0.4 - 38
1 ¼	0.8 - 95
1 ½	1 - 130
2	2 - 210
2½	2.5 - 230
3	4 - 460
4	8 - 800
6	15 - 1,800
8	26 - 3,100
10	42 - 4,900
12	60 - 7,050
14	72 - 8,600
16	98 - 11,400
18	120 - 14,600
20	150 - 18,100
24	230 - 26,500
30	360 - 41,900
36	510 - 60,900

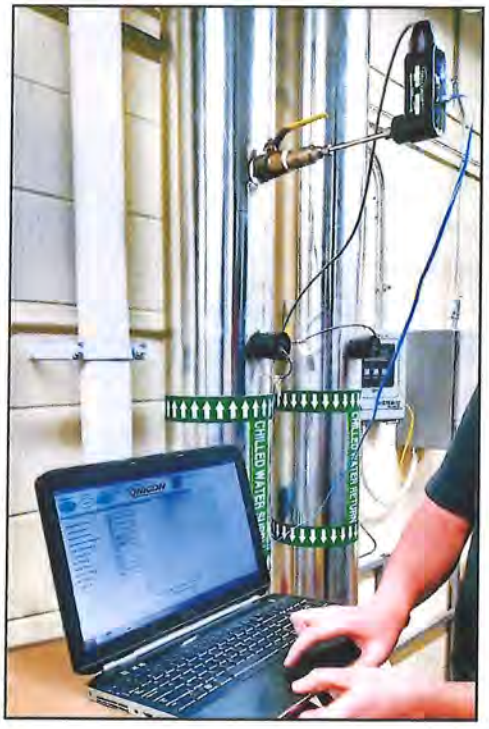

Utility software available allows for programming and field diagnostics.

Inline meters are provided with meter couplings. Couplings are available with NPT or copper sweat process connections.

11451 Belcher Road South, Largo, FL 33773 • USA • Tel +1 (727) 447-6140 • Fax +1 (727) 442-5699
www.onicon.com • sales@onicon.com

GENERAL SPECIFICATIONS

ACCURACY
± 0.5% of reading at calibrated velocity
Insertion: ± 1% of reading from 3 to 30 ft/s (10:1 range)
± 2% of reading from 0.4 to 20 ft/s (50:1 range)
Inline: ± 2% of reading from 0.8 to 38 GPM (50:1 range)

SENSING METHOD
Electronic impedance sensing (non-magnetic and non-photoelectric)

PIPE SIZE RANGE
Insertion: 1¼ through 72" nominal diameter
Inline: Threaded or sweat union fittings - ¾ or 1"

SUPPLY VOLTAGE
24 ±4 V AC/DC at 100 mA

LIQUID TEMPERATURE RANGE
Medium Temp: 150° F continuous, 200° F peak
High Temp: 280° F continuous, 300° F peak
Meters operating above 250° F require 316 SS construction option

AMBIENT TEMPERATURE RANGE
-5° to 160° F (-20° to 70° C)

OPERATING PRESSURE
400 PSI maximum

PRESSURE DROP
Insertion: Less than 1 PSI at 20 ft/s in 1½" pipe, decreasing in larger pipes and lower velocities
Inline: 3 PSI at maximum flow rate

MATERIAL
Wetted material:
Electroless nickel plated brass stem
Optional: 316 stainless steel [1]
Optional: NSF/ANSI 61/372 version* [1]

OUTPUT SIGNALS AVAILABLE
Frequency Output
0-15 V peak pulse, programmable max Hz
Scaled Pulse / Alarm Output
Isolated solid state dry contact
Contact rating: 100 mA, 50 V
Contact duration: Field programmable; 50, 100, 500 or 1000 ms
Analog Output (non-isolated)
Signal type: 4-20 mA, 0-10 V or 0-5 V (jumper selectable)
Output range: Field programmable
Isolated Analog Output
Signal type: 4-20 mA, 0-10 V or 0-5 V (jumper selectable)
Output range: Field programmable

ELECTRONICS ENCLOSURE
NEMA4 enclosure
Optional: Submersible enclosure

ELECTRICAL CONNECTIONS
Standard: 10' of cable with ½" NPT conduit connection
Optional: Indoor DIN connector with 10' of plenum rated cable

[1] Insertion meters only

* CLASSIFIED c UL us WATER QUALITY — TURBINE INSERTION FLOW METER NSF/ANSI 61 <MH60590> ALSO CLASSIFIED IN ACCORDANCE WITH NSF/ANSI 372

METER ORDERING INFORMATION

Meter Model Number Coding = F-1ABB-CC- EFGH

A = Number of Turbines
1 = Single Turbine
2 = Dual Turbine

BB = Meter Type
00 = Insertion
34 = ¾" Inline
01 = 1" Inline

CC = Outputs
00 = Freq. and Scaled Pulse
10 = Freq., analog and Scaled Pulse
11 = Freq., Iso. Analog, and Scaled Pulse

A1 = 1.25 - 2.5" (F-1100 Only)
B2 = 2.5 – 4.0" (F-1100 Only)
C3 = 2.5 - 10"
D4 = 2.5 - 16"
E5 = 2.5 - 22"
F6 = 2.5 - 72"
00 = Inline

E= Wetted Materials
1 = Electroless Ni Plated Brass
2 = 316 SS
3 = Bronze Body, Inline

F= Electronics Enclosure
2 = NEMA 4 Weathertight Enclosure
3 = NEMA 6 Submersible Enclosure

G= Wiring Connection
2 = 10' PVC Jacketed Cable, Pig Tail with ½" Conduit Adapter
5 = 10' Plenum Rated Cable, DIN Connector
6 = 25' PVC Jacketed Cable, Pig Tail with ½" Conduit Adapter
7 = 10' Submersible Cable with Connector

H = Process Adapter
1 = 1" NPT Adapter, Medium Temperature (Temp. </= 150° F)
2 = 1" NPT Adapter, High Temperature (Temp. </= 280° F)
3 = 1" NPT Adapter, NSF Rated for Domestic Water
9 = Inline, coupling adapters based on pipe material

11451 Belcher Road South, Largo, FL 33773 • USA • Tel +1 (727) 447-6140 • Fax +1 (727) 442-5699
www.onicon.com • sales@onicon.com

data sheet

JACE® 8000 controller

PRODUCT DEFINITION

The JACE 8000 is a compact, embedded IoT (Internet of Things) controller and server platform for connecting multiple and diverse devices and sub-systems. With Internet connectivity and Web-serving capability, the JACE 8000 controller provides integrated control, supervision, data logging, alarming, scheduling and network management. It streams data and rich graphical displays to a standard Web browser via an Ethernet or wireless LAN, or remotely over the Internet.

The licensing model for the JACE 8000 controller is simplified and features standard drivers along with optional IO and field bus expansion modules for ultimate flexibility and expandability. The JACE 8000 controller operates with Niagara 4, the latest version of the Niagara Framework®, for optimum performance. In larger facilities, multi-building applications and large-scale control system integrations, Niagara 4 Supervisors can be used with JACE 8000 controllers to aggregate information, including real-time data, history and alarms, to create a single, unified application.

HARDWARE SPECIFICATIONS

TI AM3352: 1000MHz ARM* Cortex™-A8

1GB DDR3 SDRAM

Removable micro-SD card with 4GB flash total storage/2GB user storage

Wi-Fi (Client or WAP)
- *IEEE802.11a/b/g/n*
- *IEEE802.11n HT20 @ 2.4GHz*
- *IEEE802.11n HT20/HT40 @ 5GHz*
- *Configurable radio (Off, WAP, or Client)*
- *WPAPSK/WPA2PSK supported*

USB type A connector
- *Back-up and restore support*

(2) isolated RS-485 with selectable bias and termination

(2) 10/100MB Ethernet ports

Secure boot

24VAC/DC power supply

Runs Niagara 4.1 and later

Real time clock

Batteryless

powered by niagara framework®

EXPANSION MODULE AND IO CONFIGURATIONS

MAXIMUM EXPANSION MODULES SUPPORTED	MAXIMUM IO MODULES SUPPORTED
NPB-8000-LON: 4	T-IO-16-485: 16
NPB-8000-232: 4	
NPB-8000-2X-485: 2	

MAXIMUM COMBINATIONS

EXPANSION 1	EXPANSION 2	EXPANSION 3	EXPANSION 4
232 or LON	232 or LON	232 or LON	232 or LON
485 485	232 or LON	232 or LON	232 or LON
485 485	485 485	232 or LON	
485 485	485 485		

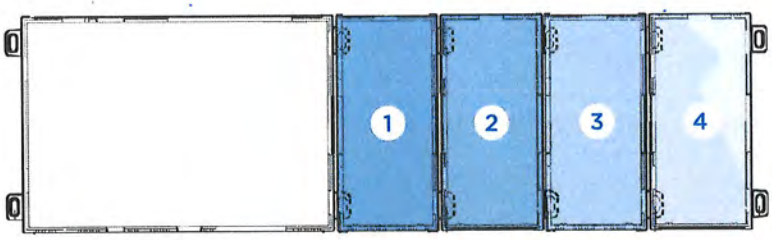

JACE® 8000 CONTROLLER MOUNTING & DIMENSIONS

1. JACE 8000 controller. Allow at least 1.5" (38mm) clearance around all sides and minimum 3" (76mm) at bottom for Wi-Fi antenna
2. Expansion module. Up to four (4) may be used. See "Expansion Module and IO Configurations"
3. Distances between center of tabs from one unit to another unit

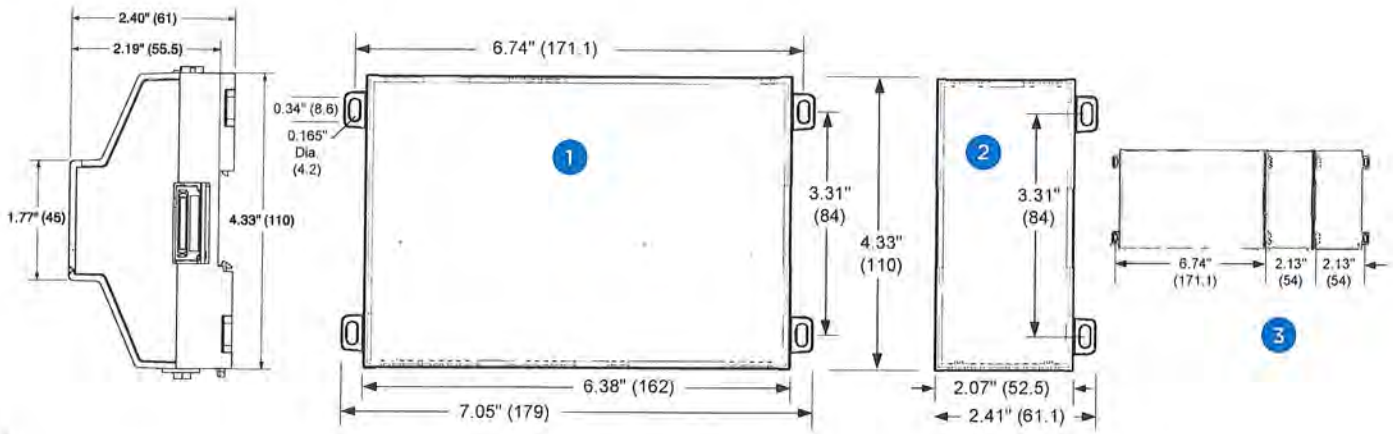

Compatible with (DIN43880) enclosures
Suitable for mounting to a panel or to an EN50022 standard 35mm rail

AGENCY CERTIFICATIONS

- UL 916
- CE EN 61326-1
- FCC Part 15 Subpart B, Class B
- FCC Part 15 Subpart C
- C-UL listed to Canadian Standards Association (CSA) C22.2 No. 205-M1983 "Signal Equipment"
- 1999/5/EC R&TTE Directive
- CCC
- SRRC
- RSS
- ROHS

ENVIRONMENTAL SPECIFICATIONS

- **Operating temperature:** -20–60°C
- **Storage temperature:** -40–85°C
- **Humidity:** 5%–95% — Non condensing
- **Shipping & vibration:** ASTM D4169, Assurance Level II
- **MTTF:** 10 years+

TRIDIUM

ORDERING INFORMATION

Part number	Description
JACE-8000	Base unit includes two isolated RS485 ports, two 10/100MB Ethernet ports, USB Backup & Restore and Wi-Fi connectivity
JACE-8000-DEMO	Base unit includes two isolated RS485 ports, two 10/100MB Ethernet ports, USB Backup & Restore, Wi-Fi connectivity, all available Tridium drivers and a 500 device license. Hardware Accessories purchased separately
NC-8005	Up to 5 devices/250 point core
NC-8010	Up to 10 devices/500 point core
NC-8025	Up to 25 devices/1,250 point core
NC-8100	Up to 100 devices/5,000 point core
NC-8200	Up to 200 devices/10,000 point core
DEVICE-10	Up to 10 devices/500 point upgrade (can be purchased during initial licensing)
DEVICE-25	Up to 25 devices/1,250 point upgrade (can be purchased during initial licensing)
DEVICE-50	Up to 50 devices/2,500 point upgrade (can be purchased during initial licensing)
DEVICE-UP-10	Up to 10 devices/500 point upgrade (can be purchased post initial licensing)
DEVICE-UP-25	Up to 25 devices/1,250 point upgrade (can be purchased post initial licensing)
DEVICE-UP-50	Up to 50 devices/2,500 point upgrade (can be purchased post initial licensing)
JACE-8000-AX	Enables JACE® 8000 controller to run Niagara AX (3.8U). 3.8U Build with JACE 8000 controller support
NPB-8000-2X-485	JACE 8000 controller — add on dual port RS-485 module
NPB-8000-LON	JACE 8000 controller — add on single port LON FTT10A module
NPB-8000-232	JACE 8000 controller — add on single port RS-232 module
WPM-8000	Universal power supply for JACE 8000 controller
T-IO-16-485	Remote IO module, compatible with the JACE 8000 controller. Communication using RS 485, maximum IO supported T-IO-16-485 modules: 16
T-NPB-PWR	24V power supply for T-IO-16-485
T-NPB-PWR-UN	Universal power supply for T-IO-16-485

*All NC-8XXX parts include a Niagara 4 license and Tridium's standard driver suite. Please see Tridium standard driver suite documentation for more details.

The JACE 8000 controller is available through a wide variety of original equipment manufacturers. Our open distribution business model and open protocol support allow a vendor-neutral application compatible with devices and systems throughout the world.

TRIDIUM 804.747.4771 Corporate HQ / 877.305.1745 Customer Support tridium.com

Copyright © 2015 Tridium Inc. All rights reserved. Intel and Xeon are trademarks of Intel Corporation in the U.S. and/or other countries.

Information and/or specifications published here are current as of the date of publication of this document. Tridium, Inc. reserves the right to change or modify specifications without prior notice. The latest product specifications can be found by contacting our corporate headquarters, Richmond, Virginia. Products or features contained herein may be covered by one or more U.S. or foreign patents. This document may be copied only as expressly authorized by Tridium in writing. It may not otherwise, in whole or in part, be copied, photocopied, reproduced, translated, or reduced to any electronic medium or machine-readable form.

2015-0013

MNB-70 BACnet Zone Controller

SPECIFICATIONS

HARDWARE

Dimensions
3-5/8 H x 5 W x 1-19/32 D in
(92 x 127 x 41 mm).

Enclosure
Conforms to NEMA-1. Meets UL 94-5VA flammability ratings for plenum application use.

Mounting
Panel mount.

Power Supply Input
20.4 to 30 Vac, 50/60 Hz.

Power Consumption
15 VA at 24 Vac plus DO loads.

AGENCY LISTINGS

US
UL 916, File #E71385 Category PAZX FCC Part 15, Class A.

Canadian
UL Listed to Canadian Safety Standards (CAN/CSA 22.2).

Australian
Meets requirements to bear the C-Tick Mark.

BTL Listing
B-ASC

European Community
EMC Directive 89/336/EEC
EN61326

BACnet Zone Controller

The TAC I/A Series® MicroNet BACnet Zone Controller is an interoperable controller with native BACnet MS/TP communications support. The controller features: three universal inputs; three digital (Triac) outputs; one universal output; Sensor Link (S-Link) support; LED status indication; and an "I-Am" button.

When programmed using WorkPlace Tech Tool, the Zone Controller provides a wide range of control strategies for applications such as unit heaters, cabinet heaters, fan coil units, small unit ventilators, heat pumps, and single/dual loop control strategies.

The MicroNet BACnet Zone Controller can function either in a standalone mode or as part of a BACnet building automation system (BAS) network.

AMBIENT LIMITS

Operating Temperature
32 to 131 °F (0 to 55 °C).

Shipping and Storage Temperature
-40 to 160 °F (-40 to 71 °C).

Humidity
5 to 95% non-condensing.

WIRING TERMINALS

Fixed Screw terminals
single AWG #14 (2.08 mm²) wire or up to two AWG #18 (0.823 mm²) or smaller wires.

INPUTS FROM MN-SX MICRONET™ SENSOR

Space Temperature
32 to 122 °F (0 to 50 °C).

Space Humidity
5 to 95% RH, non-condensing.

Local Setpoint
Adjustable within limits set by application programming tool.

Override Pushbutton
For standalone occupancy control or occupancy override.

Specifications continued on next page.

Schneider Electric

Specifications continued from first page.

Fan Operation and Speed Mode
On/off, speed (low/medium/high), or auto.

System Mode
Heat, cool, off, or auto.

Emergency Heat
Enable or disable.

UNIVERSAL INPUTS (3)
Universal Input characteristics are software-configured to respond to one of the following input types:

10 k ohm Thermistor with 11 k ohm Shunt Resistor
Sensor operating range -40 to 250 °F (-40 to 121 °C), TAC model TSMN-57011-850, TS-5700-850 series, or equivalent.

1 k ohm Balco
-40 to 250 °F (-40 to 121 °C), TAC model TSMN-81011, TS-8000 series, or equivalent.

1 k ohm Platinum
-40 to 240 °F (-40 to 116 °C), TAC model TSMN-58011, TS-5800 series, or equivalent.

1 k ohm Resistive
0 to 1500 ohms.

10 k ohm Resistive
0 to 10.5 k ohms.

Analog Voltage
Range 0 to 5 Vdc.

Analog Current
Range 0 to 20 mA, requires external 250 ohm shunt resistor (AD-8969-202).

Digital
Dry switched contact; detection of closed switch requires less than 300 ohms resistance; detection of open switch requires more than 2.5 k ohms.

Standard Pulse Input
Minimum Rate
1 pulse per 4 minutes.

Maximum Rate
1 pulse per second.

DIGITAL OUTPUTS – TRIAC (3)

DO1 plus DO2 Rating
24 VA total at 24 Vac, 50/60 Hz, high side switching.

DO3 Rating
12 VA at 24 Vac, 50/60 Hz, high side switching

UNIVERSAL OUTPUT (1)

0 to 20 mA
Output load from 80 to 550 ohms.

0 to 10 V
With external 500 ohms, 1/2 W, 1% resistor.

Capable of Driving Functional Devices
RIBUI1C Relay
UO configured for 0 to 20 mAdc, no external resistor.

MODEL

Model	Inputs and Outputs		
	UI	UO	DO (Triac)
MNB-70	3	1	3

OPTIONS

MNA-ELO-1	TAC MicroNet enclosure, used if wiring to flexible conduit is required
S-Link Sensors	Temperature and humidity wall sensors with digital communication
TSMN Series	Room temperature sensors

© 2012 Schneider Electric. All rights reserved.

FEATURES

- The MicroNet BACnet Zone Controller's sequence of operation and BACnet image are fully programmable using WorkPlace Tech Tool. The controller can be applied to all common zone HVAC applications.
- Capability to function in standalone mode or as part of a BACnet building automation network.
- Integral MS/TP jack for direct connection of PC with WorkPlace Tech Tool.
- DIP switch addressable.
- Service pin button for BACnet "I am" message broadcast.
- Isolated EIA-485 transceiver for MS/TP communications.
- MS/TP baud rate selection from 9.6 up to 76.8 kbaud.
- LED indication of MS/TP communication activity and controller status.
- Firmware upgradeable over the network.

ZONE CONTROLLER TERMINALS

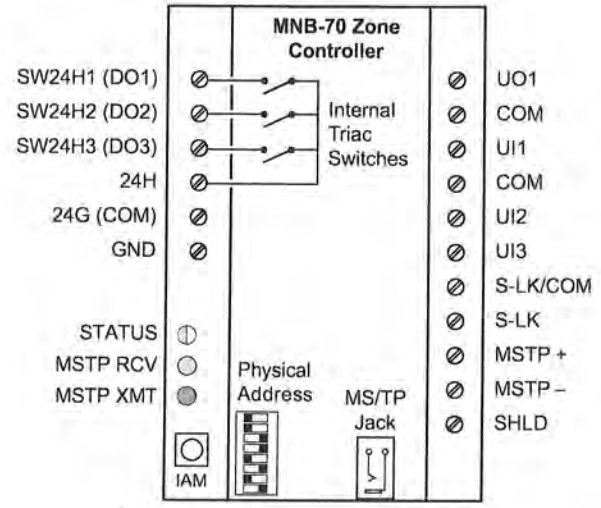

COMMUNICATIONS

BACnet Networks

The MicroNet BACnet Zone Controller incorporates an isolated EIA-485 transceiver for BACnet MS/TP communications at 9.6 up to 76.8 kbaud using standard MS/TP wiring methods. Up to 128 TAC MicroNet BACnet controllers can be connected to an MS/TP sub-net without repeaters.

S-Link

The Sensor Link (S-Link) communications wiring provides power and a communication interface for one MN-Sx TAC I/A Series MicroNet sensor. The various MN-Sx sensors can provide room temperature, room humidity, setpoint adjustment, and occupancy override. This connection uses two-wire, unshielded cable and is not polarity sensitive. Maximum S-Link bus length is 200 ft (61 m).

BACNET COMPLIANCE

BACnet Application Specific Controller (B-ASC).

BACnet is a registered trademark of ASHRAE. ASHRAE does not endorse, approve, or test products for compliance with ASHRAE standards. Compliance of listed products to the requirements of ASHRAE Standard 135 is the responsibility of BACnet International (BI). BTL is a regstered trademark of BI.

Schneider Electric 1354 Clifford Avenue, P.O. Box 2940, Loves Park, IL 61132-2940, USA 1-888-444-1311 www.schneider-electric.com/buildings

F-27455-4

May 2012 ptm

© 2012 Schneider Electric. All rights reserved.

ARCHITECTURE

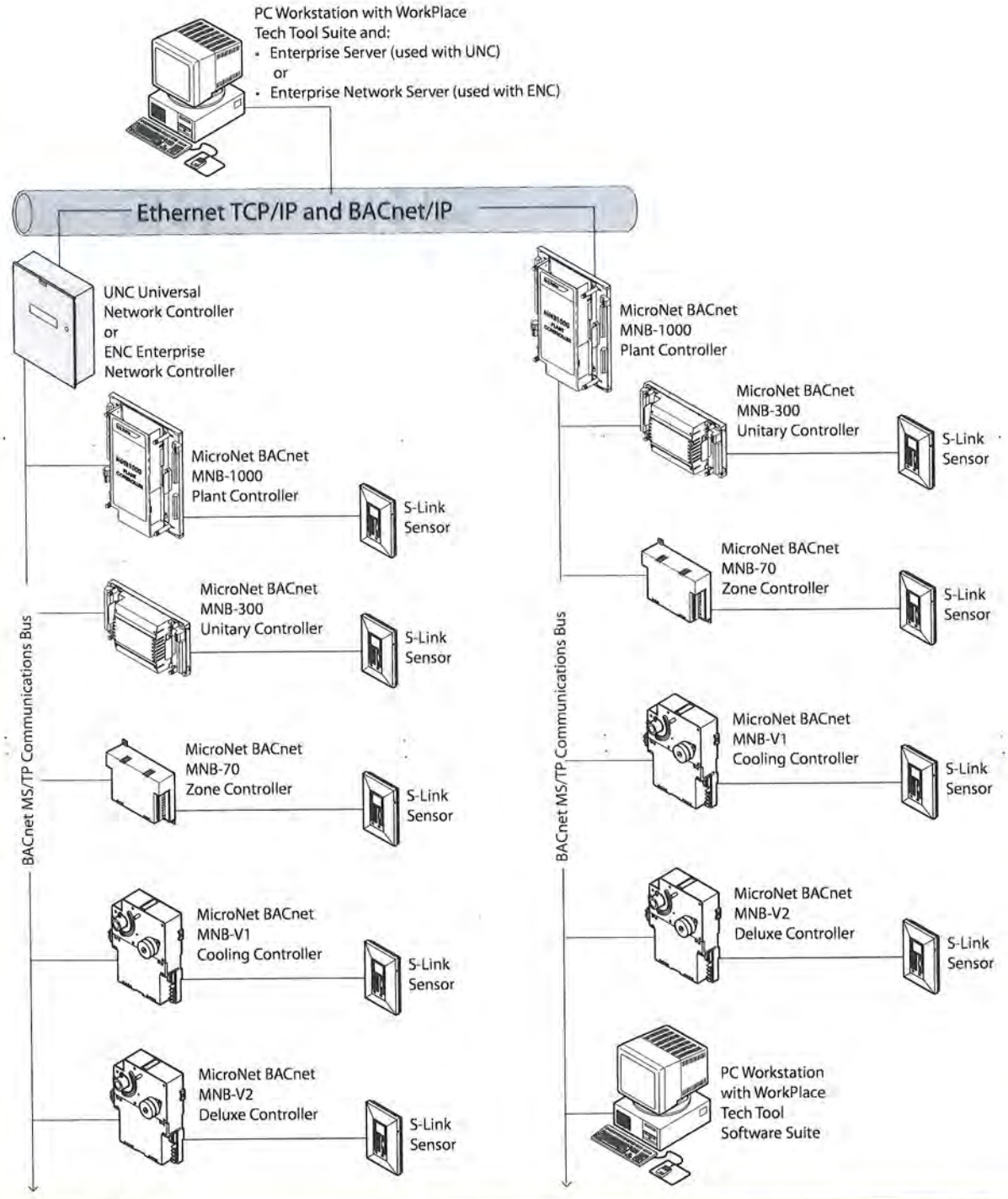

c UL us LISTED

Distributed, manufactured, and sold by Schneider Electric. I/A Series trademarks are owned by Invensys Systems, Inc. and are used on this product under master license from Invensys. Invensys does not manufacture this product or provide any product warranty or support. For service, support, and warranty information, contact Schneider Electric.

All brand names, trademarks and registered trademarks are the property of their respective owners. Information contained within this document is subject to change without notice.

Schneider Electric 1354 Clifford Avenue, P.O. Box 2940, Loves Park, IL 61132-2940, USA 1-888-444-1311 www.schneider-electric.com/buildings

© 2012 Sc[illegible]r Electric. All rights reserved.

MNB-300 BACnet Unitary Controller

I/A Series Micronet MNB-300

The TAC I/A Series™ MicroNet™ MNB-300 BACnet™ Unitary Controller is an interoperable controller with native BACnet MS/TP communications support. The controller features Sensor Link (S-Link) support, LED status and output indication, screw terminal blocks, as well as a panel mount sub-base with removable electronics module.

When programmed using WorkPlace Tech Tool, the Unitary controller provides a wide range of control strategies for packaged rooftop, heat pump, fan coil, unit ventilator, and similar applications.

Stand Alone or Connected

The TAC I/A Series BACnet Unitary Controller can function either in a standalone mode or as part of a BACnet building automation system (BAS) network.

SPECIFICATIONS

HARDWARE

Dimensions
7.0 in. W x 3.94 in. H x 2.19 in. D
(178 mm x 100 mm x 56 mm)

Enclosure
Optional wall-mount enclosure conforms to NEMA-1 requirements.
Cover meets UL94V-0 flammability ratings.

Mounting
Panel mount.

Wiring Terminals
I/O Points
Fixed screw terminals; up to two AWG #14 (2.08 mm²) or smaller wire.
Power and MS/TP
Removable screw terminals; single AWG #14 (2.08 mm²) wire or up to two AWG #18 (0.823 mm²) or smaller wires.

ELECTRICAL

Power Supply Input
20.4 to 30 Vac, 50/60 Hz.

Maximum Power Consumption
16 VA at 24 Vac.

ENVIRONMENT

Operating Temperature
-40 to 140 °F (-40 to 60 °C)

Shipping and Storage Temperature
-40 to 160 °F (-40 to 71 °C)

Humidity
5 to 95% RH, non-condensing

AGENCY LISTINGS

US
FCC Part 15, Class A
UL 916, File #E71385 Category PAZX
UL 864, Category UUKL, File #S5381 Smoke-Control Equipment

Canadian
UL Listed to Canadian Safety Standards (CAN/CSA 22.2)
CUL Listed to Standards ULC/ORD-C100-92 (Smoke Control System Equipment) and CAN-ULC-S527 (Control Units for Fire Alarm Systems)

Australian
Meets requirements to bear the C-Tick Mark

European Community
EMC Directive 89/336/EEC, EN61326

INPUTS AND OUTPUTS

Universal Inputs (6)
Universal Input characteristics are software-configured to respond to one of the following input types:
10k ohm Thermistor w/ 11k ohm Shunt Resistor
Sensor operating range -40 to 250 °F (-40 to 121 °C) range. TSMN-57011-850, TS-5700-850 Series or equivalent.

Specifications continued on next page.

Schneider Electric

Specifications continued from first page.

1k ohm Balco Input

-40 to 250 °F (-40 to 121 °C) range. TSMN-81011, TS-8000 Series or equivalent.

1k ohm Platinum Input

-40 to 240 °F (-40 to 116 °C) range. TSMN-58011, TS-5800 Series or equivalent.

1k ohm Resistive

0 to 1.5k ohms.

10k ohm Resistive

0 to 10.5k ohms.

Analog Voltage

0 to 5 Vdc.

Analog Current

Range 0 to 20 mA, requires an external 250 ohm shunt resistor (AD-8969-202).

Digital Input

Dry switched contact. Detection of closed switch requires less than 300 ohms. Detection of open switch requires more than 2.5k ohms.

Standard Pulse Input (UI1-UI6)

Minimum Rate

1 pulse per 4 minutes.

Maximum Rate

1 pulse per second.

Fast Pulse Input (UI1)

Minimum Rate

1 pulse per 4 minutes.

Maximum Rate

10 pulses per second.

Digital Outputs - Triac (6)

12 VA at 24 Vac, 50/60 Hz, each output individually isolated.

Universal Outputs (3)

Current

0 to 20 mA (output load from 80 to 550 ohms).

Voltage

0 to 10 V (with external 500 ohms, 1/2 W, 1% resistor).

Capability to Drive Functional Devices

RIBUI1C Relay (UO configured for 0 to 20 mAdc, no external resistor).

BACnet is a registered trademark of ASHRAE. ASHRAE does not endorse, approve, or test products for compliance with ASHRAE standards. Compliance of listed products to the requirements of ASHRAE Standard 135 is the responsibility of BACnet International (BI). BTL is a regstered trademark of BI.

COMMUNICATIONS

BACnet Networks

The TAC I/A Series MicroNet BACnet Unitary Controller incorporates an isolated EIA-485 (formerly RS-485) transceiver for BACnet MS/TP communications at 9.6 up to 76.8 kbaud using standard MS/TP wiring methods. Up to 128 TAC I/A Series MicroNet BACnet controllers can be connected to an MS/TP sub-net without repeaters.

S-Link

The Sensor Link (S-Link) communications wiring provides power and a communication interface for one MN-Sx MicroNet sensor. The various MN-Sx sensors can provide room temperature, room humidity, setpoint adjustment, and occupancy override. This connection uses two-wire, unshielded cable and is not polarity sensitive. Maximum S-Link bus length is 200 ft (61 m).

BACnet COMPLIANCE

BACnet Application Specific Controller (B-ASC).

FEATURES

- The TAC I/A Series MicroNet BACnet Unitary Controller's sequence of operation and BACnet image are fully programmable, using WorkPlace Tech Tool. The controllers can be applied to all common unitary HVAC applications.
- Capability to function in standalone mode or as part of a TAC I/A Series building automation network.
- Integral MS/TP jack for direct connection of PC with WorkPlace Tech Tool.
- Removable electronics module mates with panel-mounted subbase.
- Removable terminals for power and communications to facilitate commissioning.
- Optional rugged, NEMA 1 plenum-rated sheet metal enclosure.
- MS/TP DIP switch addressable.
- Service pin button for BACnet "I am" message broadcast.
- Isolated EIA-485 (formerly RS-485) transceiver for MS/TP communications.
- MS/TP baud rate selection from 9.6 up to 76.8 kbaud.
- LED indication of MS/TP communication activity, controller status, and UO and DO state.
- Firmware upgradeable over the network.
- Support for S-Link Sensor.

© 2009 Sc* *ter Electric. All rights reserved.

INPUTS FROM MN-SX I/A SERIES MICRONET SENSORS

Inputs	Description	MN-Sx Sensor
Space Temperature	32 to 122 °F (0 to 50 °C)	MN-S1, MN-S1HT, MN-S2, MN-S2HT, MN-S3, MN-S3HT, MN-S4, MN-S4HT, MN-S4-FCS, MN-S4HT-FCS, MN-S5 and MN-S5HT
Space Humidity	5 to 95% RH, Non-condensing	MN-S1HT, MN-S2HT, MN-S3HT, MN-S4HT, MN-S4HT-FCS, and MN-S5HT
Adjustable Setpoint	Adjustable within limits set by application programming tool	MN-S3, MN-S3HT, MN-S4, MN-S4HT, MN-S4-FCS, MN-S4HT-FCS, MN-S5, and MN-S5HT
Override Pushbutton	For standalone occupancy control or occupancy override	MN-S2, MN-S2HT, MN-S3, MN-S3HT, MN-S4, MN-S4HT, MN-S5 and MN-S5HT
Fan Operation and Speed	Fan mode selection: On/Off, Speed (Low/Medium/High), or Auto	MN-S4, MN-S4HT, MN-S4-FCS, MN-S4HT-FCS, MN-S5, and MN-S5HT
System Mode	System mode selection: Heat, Cool, Off, or Auto	MN-S4, MN-S4HT, MN-S5, and MN-S5HT
Emergency Heat	Emergency heat mode selection: Enable or Disable	MN-S5 and MN-S5HT

MODELS

Part Number	Description	Inputs/Outputs		
		UI	UO	DO (Triac)
MNB-300	TAC I/A Series MicroNet BACnet Unitary Controller	6	3	6

ACCESSORIES

Part Number	Description	Part Number	Description
MNB-300-ENC	Wall-mount enclosure	S-Link Sensors	Temperature and humidity wall sensors with digital communication
MNB-BASE-300	Controller base assembly only		
MNB-CNTLR-300	Controller cover assembly only	TSMN Series	Room temperature sensors

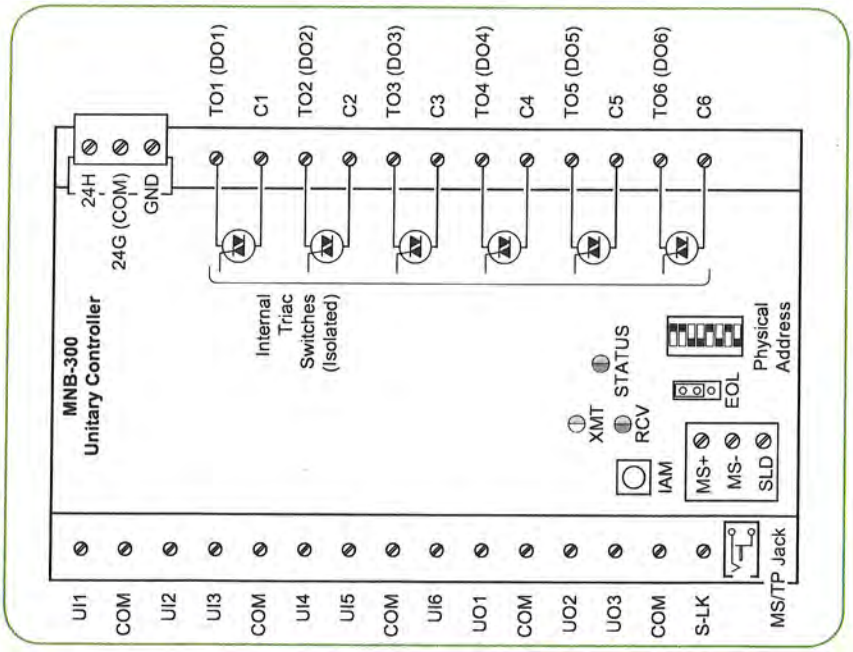

Schneider Electric 1354 Clifford Avenue, P.O. Box 2940, Loves Park, IL 61132-2940, USA 1-888-444-1311 www.schneider-electric.com/buildings

© 2009 Schneider Electric. All rights reserved.

ARCHITECTURE

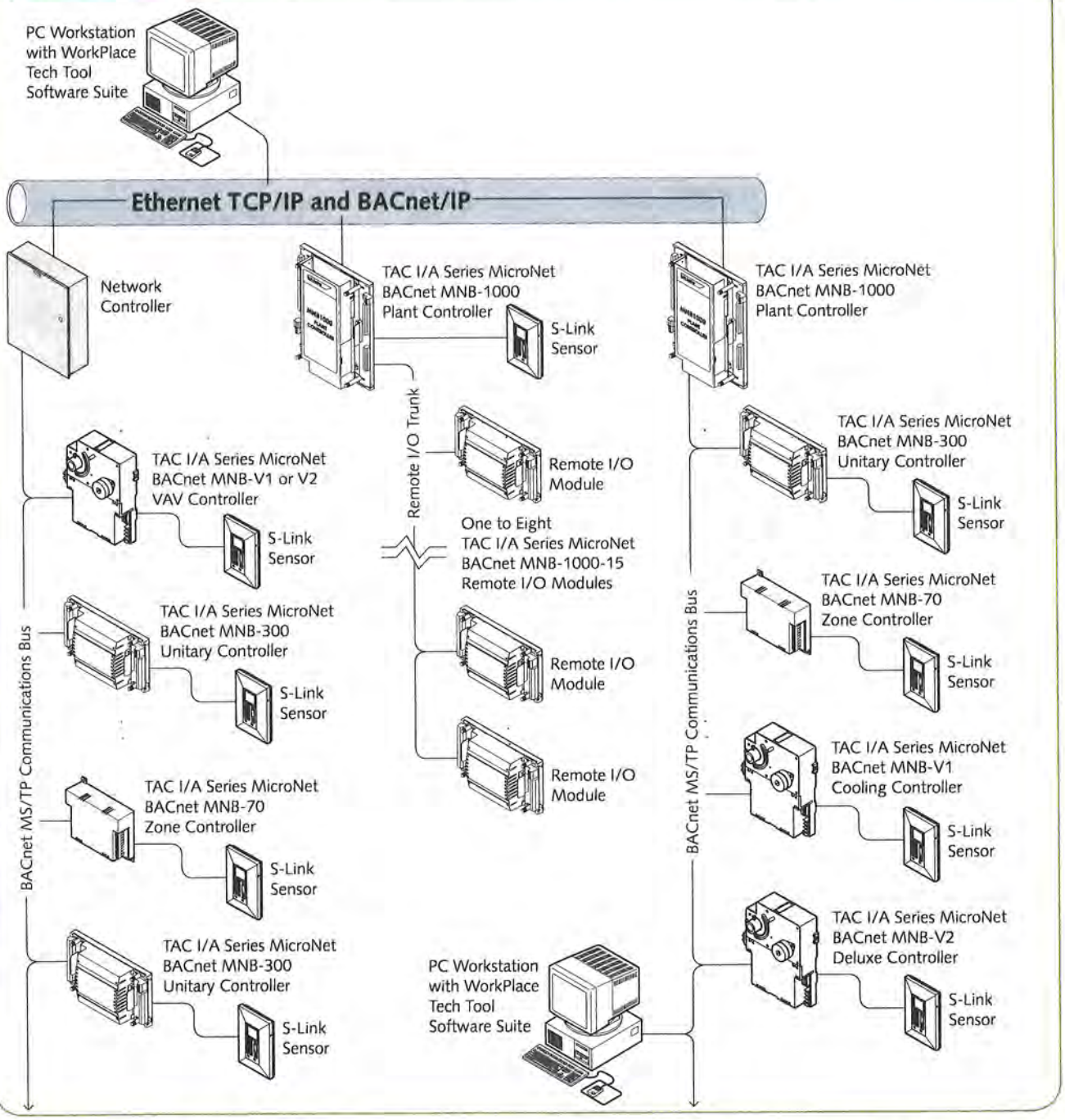

LISTED LISTED SIGNALING

Distributed, manufactured, and sold by Schneider Electric. I/A Series trademarks are owned by Invensys Systems, Inc. and are used on this product under master license from Invensys. Invensys does not manufacture this product or provide any product warranty or support. For service, support, and warranty information, contact Schneider Electric.

On October 1st, 2009, TAC became the Buildings Business of its parent company Schneider Electric. This document reflects the visual identity of Schneider Electric, however there remain references to TAC as a corporate brand in the body copy. As each document is updated, the body copy will be changed to reflect appropriate corporate brand changes.

All brand names, trademarks and registered trademarks are the property of their respective owners. Information contained within this document is subject to change without notice.

Schneider Electric 1354 Clifford Avenue, P.O. Box 2940, Loves Park, IL 61132-2940, USA 1-888-444-1311 www.schneider-electric.com/buildings

© 2009 Sc ter Electric. All rights reserved.

MicroNet BACnet Plant Controller

MicroNet BACnet Plant Controller MNB-1000

The TAC I/A Series™ MicroNet™ BACnet™ Plant Controller is an interoperable controller with native BACnet/IP, BACnet Ethernet, and MS/TP communications support and routing functionality between physical networks. The controller features: Sensor Link (S-Link) support; remote I/O support; LED status and output indication; two Ethernet ports; screw terminal blocks; and a panel-mount subbase with a removable electronics module.

The Plant Controller's sequence of operation and BACnet image are fully programmable using WorkPlace Tech Tool, and can be applied to a wide range of mechanical equipment. Typical applications include central station air handlers, VAV air handlers, and cooling towers.

The MicroNet BACnet Plant Controller can function either in a standalone mode or as part of a BACnet building automation system (BAS) network. The MNB-1000 is BACnet Testing Laboratories (BTL) listed as a BACnet Application Specific Controller (B-ASC).

SPECIFICATIONS

HARDWARE

Dimensions
10-15/16 H x 8-3/8 W x 2-9/32 D in. (278 x 213 x 58 mm).

Enclosure
Optional rugged sheet metal enclosure conforms to NEMA-1.

Mounting
Panel mount.

Power Supply Input
20.4 to 30 Vac, 50/60 Hz.

Power Consumption
50 VA at 24 Vac.

AGENCY LISTINGS

US
FCC Part 15, Class A.
UL 916, File #E71385 Category PAZX
UL 864, Category UUKL, File #S5381 Smoke-Control Equipment

Canadian
UL Listed to Canadian Safety Standards (CAN/CSA 22.2).
CUL Listed to Standards ULC/ORD-C100-92 (Smoke Control System Equipment) and CAN-ULC-S527 (Control Units for Fire Alarm Systems)

Australian
Meets requirements to bear the C-Tick Mark.

European Community
EMC Directive 89/336/EEC
EN61326

AMBIENT LIMITS

Operating Temperature
-40 to 140 °F (-40 to 60 °C).

Shipping and Storage Temperature
-40 to 160 °F (-40 to 71 °C).

Humidity
5 to 95% non-condensing.

WIRING TERMINALS

Remote I/O (IO+, IO-, SLD)
Removable screw terminals; single AWG #14 (2.08 mm^2) wire or up to two AWG #18 (0.823 mm^2) or smaller wires.

MS/TP (MS+, MS-, SLD)
Removable screw terminals; single AWG #14 (2.08 mm^2) wire or up to two AWG #18 (0.823 mm^2) or smaller wires.

I/O Points
Fixed screw terminals; single AWG #14 (2.08 mm^2) wire or up to two AWG #18 (0.823 mm^2) or smaller wires.

Power
Removable screw terminals; up to two AWG #14 (2.08 mm^2) or smaller wires.

Continued on next page.

Schneider Electric

Continued from first page.

INPUTS FROM MN-SX MICRONET SENSOR

Space Temperature
32 to 122 °F (0 to 50 °C).

Space Humidity
5 to 95% RH, non-condensing.

Local Setpoint
Adjustable within limits set by application programming tool.

Fan Operation and Speed Mode
On/off, speed (low/medium/high), or auto.

System Mode
Heat, cool, off, or auto.

Emergency Heat
Enable or disable.

UNIVERSAL INPUTS (12)

Universal Input characteristics are software-configured to respond to one of the following input types:

10k ohm Thermistor with 11k ohm Shunt Resistor
Sensor operating range -40 to 250 °F (-40 to 121 °C), model TSMN-57011-850, TS-5700-850 series, or equivalent.

1k ohm Balco
-40 to 250 °F (-40 to 121 °C), model TSMN-81011, TS-8000 series, or equivalent.

1k ohm Platinum
-40 to 240 °F (-40 to 116 °C), model TSMN-58011, TS-5800 series, or equivalent.

1k ohm Resistive
0 to 1500 ohms.

10k ohm Resistive
0 to 10.5k ohms.

Analog Voltage
Range 0 to 5 Vdc.

Analog Current
Range 0 to 20 mA; requires external 250 ohm shunt resistor (AD-8969-202).

Digital
Dry switched contact; detection of closed switch requires less than 300 ohms resistance; detection of open switch requires more than 2.5k ohms.

DIGITAL INPUTS (4)

Dry Switched Contact
Detection of closed switch requires less than 300 ohms resistance; detection of open switch requires more than 2.5k ohms.

FAST PULSE INPUT (DIGITAL INPUT ONLY)

Minimum Rate
1 pulse per 4 minutes.

Maximum Rate
10 pulses per second.

DIGITAL OUTPUTS – TRIAC (8)

12 VA at 24 Vac, 50/60 Hz, each output individually isolated.

UNIVERSAL OUTPUTS (8)

0 to 20 mA
Output load from 80 to 550 ohms.

0 to 10 V
With external 500 ohms, 1/2 W, 1% resistor.

Capable of Driving Functional Devices RIBU1C Relay
UO configured for 0 to 20 mAdc, no external resistor.

20 VDC OUTPUT

20 Vdc ±10% at 100 mA.

OPTIONS

MNB-1000-ENC
Wall-mount enclosure

MNB-BASE-1000
Controller Base assembly only

MNB-CNTLR-1000
Controller assembly only

MNB-15
Remote I/O Module

S-Link Sensors
Temperature and humidity Wall Sensors with digital communication

TSMN Series
Room Temperature Sensors

MODEL

Part Number	Inputs and Outputs[a]			
	UI	DI	UO	DO (Triac)
MNB-1000	12	4	8	8

a. The I/O point count can be greatly expanded with the addition of one to eight Remote I/O Modules, each of which adds 15 I/O points. Refer to the MNB-1000-15 Remote I/O Module sales data sheet, F-27487.

© 2013 Schneider Electric. All rights reserved.

FEATURES

- The MicroNet BACnet Plant Controller's sequence of operation and BACnet image are fully programmable using WorkPlace Tech Tool.
- Capability to function in standalone mode or as part of a TAC I/A Series building automation network.
- Removable electronics module mates with panel-mounted subbase.
- Removable terminals for power and communications, to facilitate commissioning.
- Integral MS/TP jack for direct connection of PC with WorkPlace Tech Tool Suite.
- Optional rugged, NEMA 1 sheet metal enclosure.
- MS/TP DIP switch addressable.
- Service pin button for BACnet "I am" message broadcast.
- Isolated EIA-485 (formerly RS-485) transceiver for MS/TP communications.
- MS/TP baud rate selection from 9.6 up to 76.8 kbaud.
- LED indication of MS/TP and Ethernet IP communication activity, controller status, DO state, and UO state.
- Application-programmable LED provides on/off indication of a user-defined application parameter.
- Firmware upgradeable over the network.
- 72 hour, battery-backed real time clock.
- BBMD, remote connectivity across subnets.
- Support for Remote I/O Modules and S-Link Sensor.
- IP/Ethernet bridge.
- BACnet router functionality.

COMMUNICATIONS

BACnet Networks

The MicroNet BACnet Plant Controller incorporates a fully functional BACnet router between its 3 fully configurable communications ports.

MS/TP

Isolated EIA-485 (formerly RS-485) transceiver, providing support for up to 128 MS/TP devices communicating at 9.6 up to 76.8 kbaud, using standard MS/TP wiring methods.

Ethernet/IP

Dual 10/100 Ethernet ports with modular RJ-45 jacks. Both ports are set to be an Ethernet Bridge, saving on network wiring.

BACnet Ethernet

Standard BACnet Ethernet communications.

BACnet/IP

Communications choices are Standard BACnet/IP, BBMD, or Foreign Device.

S-Link

The Sensor Link (S-Link) communications wiring provides power and a communication interface for one MN-Sx TAC I/A Series MicroNet sensor. The various MN-Sx sensors can provide room temperature, room humidity, setpoint adjustment, and occupancy override. This connection uses two-wire, unshielded cable and is not polarity sensitive. Maximum S-Link bus length is 200 ft (61 m).

Remote I/O

The remote I/O communications wiring provides an interface for one to eight optional MNB-1000-15 Remote I/O Modules, which can be used to expand upon the Plant Controller's onboard I/O.

BACnet is a registered trademark of ASHRAE®. ASHRAE does not endorse, approve, or test products for compliance with ASHRAE standards. Compliance of listed products to the requirements of ASHRAE Standard 135 is the responsibility of BACnet International (BI). BTL is a registered trademark of BI.

CONTROLLER TERMINALS

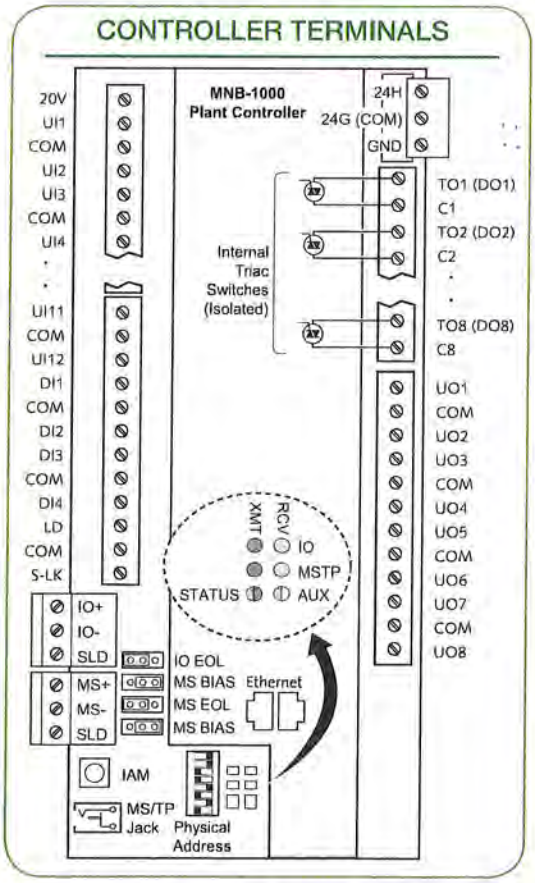

© 2013 Schneider Electric. All rights reserved.

TAC I/A SERIES BACnet TOPOLOGY

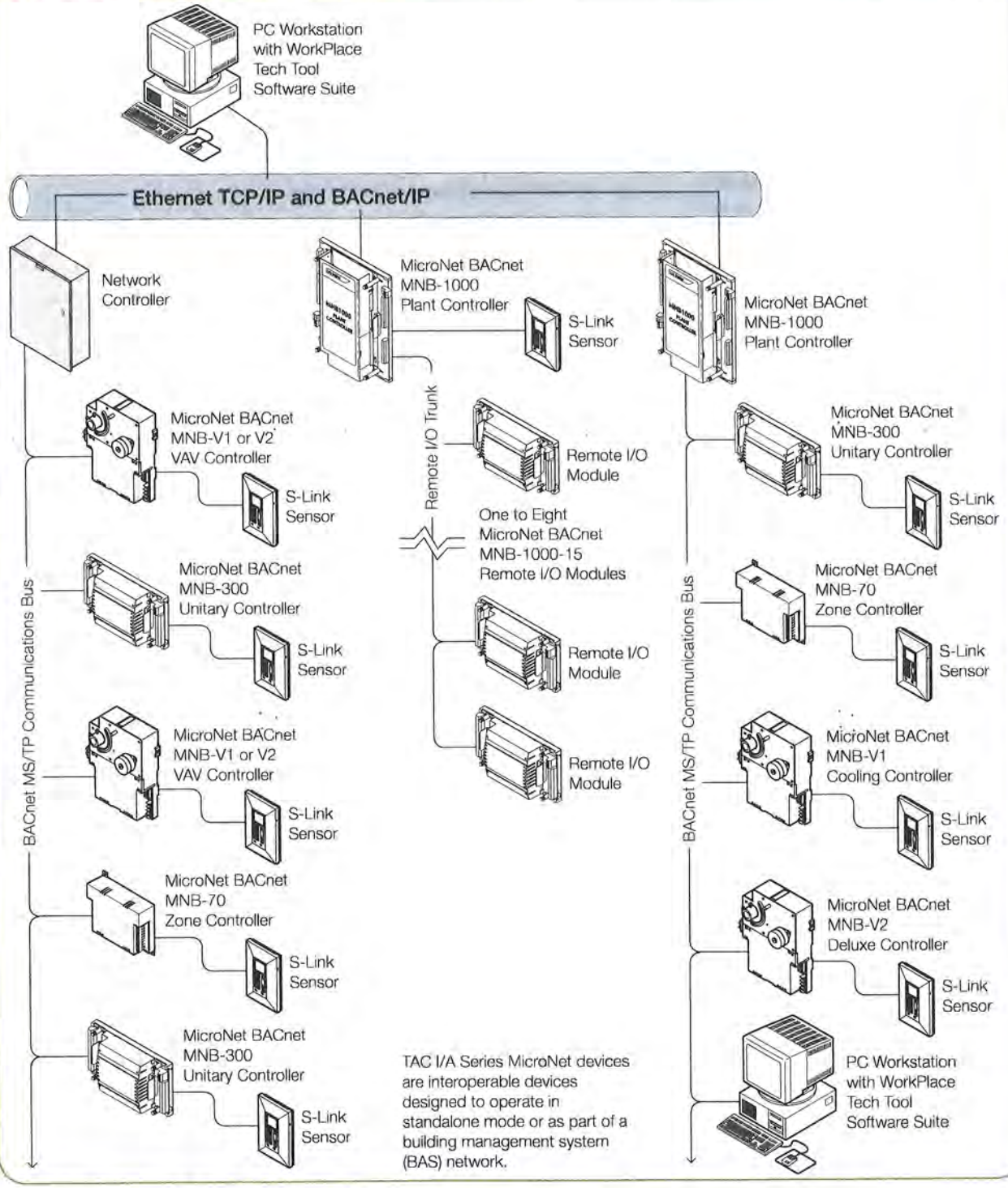

Distributed, manufactured, and sold by Schneider Electric. I/A Series trademarks are owned by Invensys Systems, Inc. and are used on this product under master license from Invensys. Invensys does not manufacture this product or provide any product warranty or support. For service, support, and warranty information, contact Schneider Electric.

All brand names, trademarks and registered trademarks are the property of their respective owners. Information contained within this document is subject to change without notice. All rights reserved.

Schneider Electric 1354 Clifford Avenue, P.O. Box 2940, Loves Park, IL 61132-2940, USA 1-888-444-1311 www.schneider-electric.com

© 2013 Schneider Electric. All rights reserved.

WET TO WET

Differential Pressure Transducer w/ Remote Probes

The A/WPR2 Series Remote Wet to Wet Differential Pressure Transmitter is designed to reduce installation time and provide mounting flexibility, often eliminating the need for additional plumbing. They accurately measure wet media pressures in a variety of applications. Commonly used for monitoring pumps, these devices are also ideal for measuring pressure across filters, heat exchangers and compressors. The A/WPR2's enclosure opens conveniently to allow it to be reconfigured between three additional ranges (see order grid) and outputs of 4 to 20 mA (default), 0 to 5 VDC, or 0 to 10 VDC. The A/WPR2 Series can measure both uni or bi-directional pressure ranges as low as 3 psi and as high as 300 psi, depending on the unit. The A/WPR2 also features a push button auto zero function for remote calibration.

The LCD option will display pressure values for both the High and Low side pressures, a differential pressure value, "OVR" for values over the specified range, "ERROR" for differential pressures out of range, and "ZERO" when the auto-zero is in process.

The A/WPR2 Series is covered by ACI's Five (5) Year Limited Warranty. The warranty can be found in the front of ACI's Sensors & Transmitters catalog, as well as on ACI's web site, www.workaci.com.

SPECIFICATIONS

Supply Voltage	4 to 20 mA Output: 250Ω Load: 16 to 36 VDC | 500Ω Load: 20 to 36 VDC 0 to 5 / 0 to 10 VDC Output: 16 to 36 VDC, 24 VAC +/- 10%
Supply Current	25 mA maximum (current output), 6 mA maximum (voltage outputs)
Differential Pressure Output	2 wire: Linear 4-20 mA DC Current (default), 3 wire: 0-5 VDC; 0-10 VDC (field selectable)
Output Load Resistance	4 to 20 mA: 500 ohms maximum | 0 to 5 / 0 to 10 VDC: 5K ohms minimum
Field Selectable Range/Spans	3, 7.5, 15 & 30 psi (uni and bi-directional) for 30 psi sensors 10, 25, 50 & 100 psi (uni and bi-directional) for 100 psi sensors 30, 75, 150 & 300 psi (uni and bi-directional) for 300 psi sensors
Accuracy	±1.0% FSO (includes linearity, hysteresis and repeatability) | ±1.5% for 0-10 & 0-30 psi ranges
Output Update Rate	1 second
Response Time (0-100% FSO)	8 seconds
Thermal Effects	±2.0% FSO from 32 to 140°F (0-60°C)
Proof Pressure	3X F.S (A/WPR2-30 Series) & (A/WPR2-100 Series) | 2X F.S. (A/WPR2-300 Series)
Burst Pressure	1500 psi
Operating Temperature	Sensors: -30 to 120°C (-22 to 248°F) | Electronics/Housing/Cables: 0 to 75°C (32 to 167°F)
Compensated Temperature Range	32 to 140°F (0 to 60°C)
Operating RH	10 to 90% RH non-condensing
Process Fitting	1/4"-18 NPT Male (304 stainless steel); Pressure Snubber included for light oils/water for WPR2-100
Enclosure Rating	NEMA 4X/IP66
Product Dimensions	Enclosure: (L) 5.10" (W) 3.93" (H) 3.00"

RANGE AND OUTPUT CHART

Series: A/WPR2-30 (Uni-directional)	**Default Uni-directional Range:** 0-30 psi	**Selectable Uni-directional Ranges:** 15, 7.5 & 3 psi
Series: A/WPR2-30 (Bi-directional)	**Selectable Bi-directional Range:** ±30 psi	**Selectable Bi-directional Ranges:** ±15, ±7.5 & ±3 psi
Series: A/WPR2-100 (Uni-directional)	**Default Uni-directional Range:** 0-100 psi	**Selectable Uni-directional Ranges:** 0-50, 25 & 10 psi
Series: A/WPR2-100 (Bi-directional)	**Selectable Bi-directional Range:** ±100 psi	**Selectable Bi-directional Ranges:** ±50, ±25 & ±10 psi
Series: A/WPR2-300 (Uni-directional)	**Default Uni-directional Range:** 0-300 psi	**Selectable Uni-directional Ranges:** 0-150, 75 & 30 psi
Series: A/WPR2-300 (Bi-directional)	**Selectable Bi-directional Range:** ±300 psi	**Selectable Bi-directional Ranges:** ±150, ±75 & ±30 psi

ORDERING

Select a Sensor Series (A), one Wiring Harness (B), & one LCD Option (C). **NOTE:** For maximum line pressures less than 100 psi, you should select the A/WPR2-100 Series and for maximum line pressures between 100 and 300 psi, you should select the A/WPR2-300 Series. The jumpered output range should be selected based upon the maximum expected differential pressure rather than the maximum line pressure. In addition, for applications in which the maximum line pressure is 10 PSI or below with a maximum differential pressure of 5 lbs or less we recommend the use of the A/WP Series Differential pressure with a 3 Valve Manifold for best results.

A Sensor Series	B Wiring Harness	C LCD Option
A/WPR2-30	10'	---- (No LCD)
A/WPR2-100	20'	LCD
A/WPR2-300		

BUILD PART NUMBER

After completing (A), (B) & (C) from the above table, fill in the Part Number Table below. An example part number is offered.

A		B		C
	—		—	

EXAMPLE: A/WPR2-100 - 10' - LCD

Technical Data Sheet for WSC-400

Unit Performance (AHRI 550/590)

Performance Points Rated with AHRI Condenser Relief

Point #	% of Design Load	Net Capacity ton	Input kW	Cooling Efficiency kW/ton	Evaporator Fluid				Condenser Fluid			
					Flow gpm	Temperature Entering °F	Temperature Leaving °F	Pressure Drop ft H_2O	Flow gpm	Temperature Entering °F	Temperature Leaving °F	Pressure Drop ft H_2O
1	100.0	400.0	225.9	0.5648	638.6	60.00	45.00	16.8	1199	85.00	94.30	11.8
2	90.0	360.0	190.9	0.5304	638.6	58.50	45.00	16.8	1199	81.00	89.28	11.8
3	80.0	320.0	163.8	0.5118	638.6	57.00	45.00	16.8	1199	77.00	84.31	11.8
4	70.0	280.0	142.2	0.5077	638.6	55.50	45.00	16.8	1199	73.00	79.37	11.8
5	60.0	240.0	124.5	0.5187	638.6	54.00	45.00	16.8	1199	69.00	74.45	11.8
6	50.0	200.0	109.8	0.5490	638.6	52.50	45.00	16.8	1199	65.00	69.56	11.7
7	40.0	160.0	98.49	0.6156	638.6	51.00	45.00	16.8	1199	65.00	68.69	11.7
8	30.0	120.0	84.58	0.7048	638.6	49.50	45.00	16.8	1199	65.00	67.81	11.7
9	20.0	80.00	66.21	0.8276	638.6	48.00	45.00	16.8	1199	65.00	66.90	11.7
10	10.0	40.00	40.73	1.018	638.6	46.50	45.00	16.8	1199	65.00	65.95	11.7

Service Data

Service Points Rated with AHRI Condenser Relief

Point #	Superheat Δ °F	Subcooling Δ °F	Evaporator Fluid			Condenser Fluid		
			Temperature °F	Pressure psig	Velocity ft/s	Temperature °F	Pressure psig	Velocity ft/s
1	1.0	9.3	43.5	38.6	6.3	96.8	117.5	5.6
2	1.0	8.4	43.7	38.7	6.3	91.5	107.1	5.6
3	1.0	7.6	43.8	38.8	6.3	86.2	97.4	5.6
4	1.0	6.7	43.9	39.0	6.3	81.0	88.4	5.6
5	1.0	5.9	44.1	39.1	6.3	75.9	80.0	5.6
6	1.0	5.0	44.2	39.2	6.3	70.7	72.2	5.6
7	1.0	4.1	44.3	39.4	6.3	69.6	70.5	5.6
8	1.0	3.2	44.5	39.5	6.3	68.5	68.9	5.6
9	1.0	2.2	44.6	39.7	6.3	67.3	67.3	5.6
10	1.0	1.1	44.8	39.8	6.3	66.2	65.7	5.6

Physical

Evaporator

Inlet Location	Header Type	Header Material	Tube Sheet Material	Design Pressure (Waterside)
Right	Dished	Carbon Steel	Carbon Steel	150 psig

Condenser

Inlet Location	Header Type	Header Material	Tube Sheet Material	Design Pressure (Waterside)
Right	Dished	Carbon Steel	Carbon Steel	150 psig

Electrical

Voltage	RLA	LRA	Power Connection	Power Factor	MCA	MOCP
4160 V / 60 Hz / 3 Ph	36 A	189 A	Single Point	0.88	45 A	63 A

Starter

Type	Model	Location	Enclosure Type	Motor Protection
Solid State	MVSS40	Free Standing	NEMA 1	Standard

Phase Voltage Monitor:	Approval
Under / Over Voltage, Phase Loss / Unbalance Protection	CSA ETL

Technical Data Sheet for WSC-400

Sound (without insulation)

Sound Pressure											
63 Hz	125 Hz	250 Hz	500 Hz	1 kHz	2 kHz	4 kHz	8 kHz	Overall	75% Load	50% Load	25% Load
69.0	67.0	69.0	72.0	76.0	79.0	79.0	74.0	**84.5**	82.0	82.0	83.0

Sound Pressure (dB) measured in accordance with ANSI/AHRI Standard 575-2008 ('A' weighted)

Options

Basic Unit	
Packaging:	Bagging only
Water Flow Indicators:	Both Evap. and Cond. (*Thermal Dispersion*)
Insulation	
Thermal:	0.75" on Evaporator Shell, Suction Piping, Compressor Inlet, Motor Barrel & High Humidity
Head:	Evaporator Return & Connection Heads
Control	
Communication Protocol:	BACnet MS/TP
Starter	
Disconnect / Breaker Type:	non-Fused Molded Case Disconnect Switch
Floor Stand:	Yes

Warranty

Unit Startup:	Domestic by Daikin Factory Service (Std.)
Standard Warranty:	Domestic, First Year Standard Warranty (Parts & Labor)
Extended Warranty:	4 Years Compressor only Parts & Labor
Delayed Warranty Start:	None (Startup 12-18 months after ship date)

AHRI Certification

Certified in accordance with the AHRI Water-Cooled Water-Chilling and Heat Pump Water-Heating Packages Using Vapor Compression Cycle Certification Program, which is based on AHRI Standard 550/590 (I-P) and AHRI Standard 551/591 (SI). Certified units may be found in the AHRI Directory at www.ahridirectory.org.

Notes

25. Above RLA, MCA and MOCP values are per Chiller.
26. Performance kW & kW/ton values are total values unless noted otherwise.
27. Minimum flow is based upon standard condenser water relief and not increased lift due to constant condenser water temperature.
28. This model utilizes a water cooled oil cooler as standard equipment.
29. Use only copper supply wires with ampacity based on 75°C conductor rating. (Exception: for equipment rated over 2,000 volts, 90°C or 105°C rated conductors shall be used). Connections to terminals must be made with copper lugs and copper wire.
30. For orientation purposes, left and right hand vessel connection locations are determined by facing the OITS panel (Operator Interface Touch Screen). The unit front is the long dimension side with the OITS panel and rear is the opposite side long dimension.

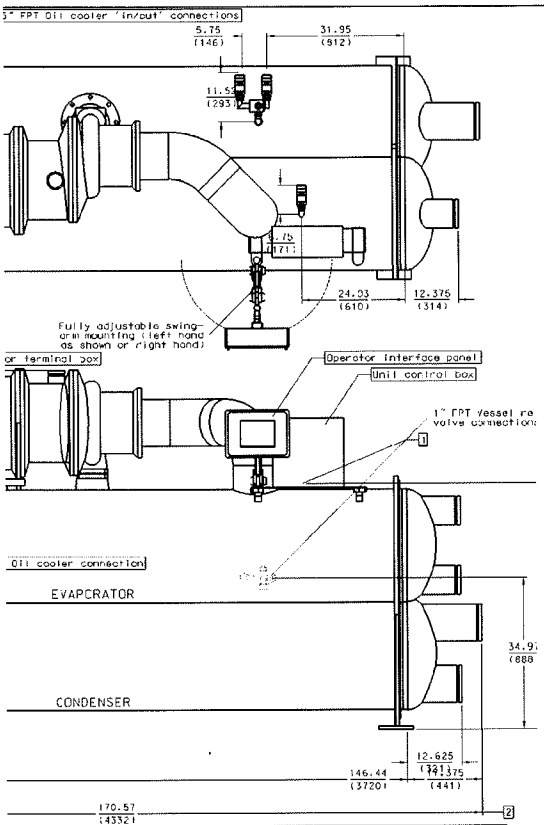

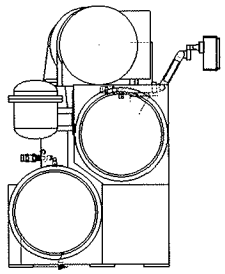

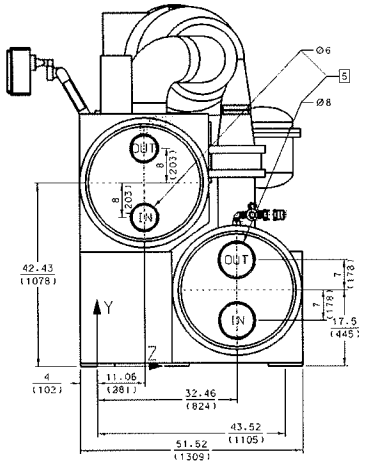

	Water Volume gal (l)		Center of Gravity ins (mm)		
g)	Evap	Cond	X	Y	Z
	73 (275)	122 (462)	65 (1644)	37 (946)	23 (583)
	- (-)	- (-)	63 (1607)	39 (980)	23 (585)

es must be piped per ANSI/ASHRAE 15.
nsions is required at either end for tube removal, 36 in. (914 mm) is

ufacturing tolerance.

4. 2.5 in. (64 mm) diameter lifting holes are provided. See installation manual for lifting instructions.
5. All water connections are given in standard U.S. pipe sizes. Standard connections are suitable for welding or grooved couplings.
6. Vibration isolator pads are provided for field installation (0.25 in (6 mm) thick when loaded).
7. If main power wiring is brought up through the floor, this wiring must be outside the envelope of the unit.
8. The shipping skid adds 4 in. (105 mm) to the overall unit height.
9. Dimensions shown are for units with standard 150 psig (1 MPa) design water side pressure. Check factory for unit dimensions with higher pressures.

Unit Tag: WSC-400			Sales Office: TriState HVAC Equipment, LLP (Phil.)		
Project Name: Houtzdale Prison			Sales Engineer: Dan Sawron		
Date: 15/10/2018	Ver/Rev:	Sheet: 1 of 1	Scale: NTS	Tolerance: +/- 1.0"	Dwg Units: in (mm)

:2612WE2CR2VCN4E/A/LMVSS40

pproved in writing by Daikin Applied. Purchaser must determine that the equipment is fit and sufficient for the job specifications

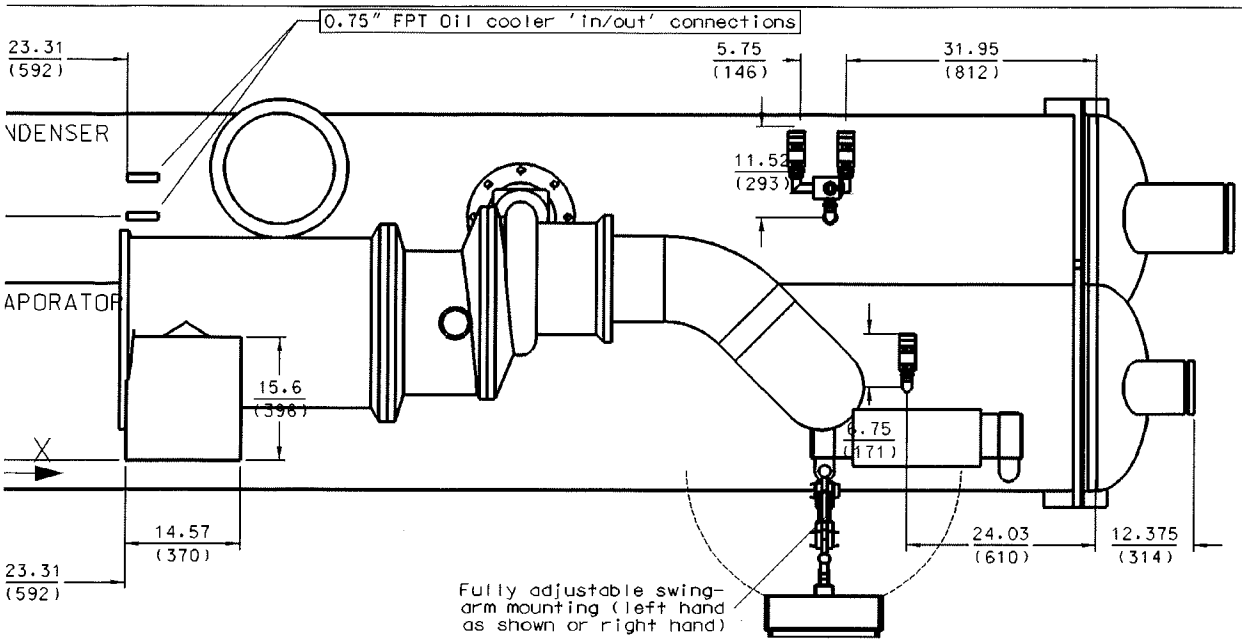

Certified for WSC-400

	Unit Tag: WSC-400			Sales Office: TriState HVAC Equipment, LLP (Phil.)		
	Project Name: Houtzdale Prison			Sales Engineer: Dan Sawron		
	Date: 15/10/2018	Ver/Rev:	Sheet: 2 of 2	Scale: NTS	Tolerance: +/- 1.0"	Dwg Units: in (mm)

:2612WE2CR2VCN4E/A/LMVSS40

)proved in writing by Daikin Applied. Purchaser must determine that the equipment is fit and sufficient for the job specifications

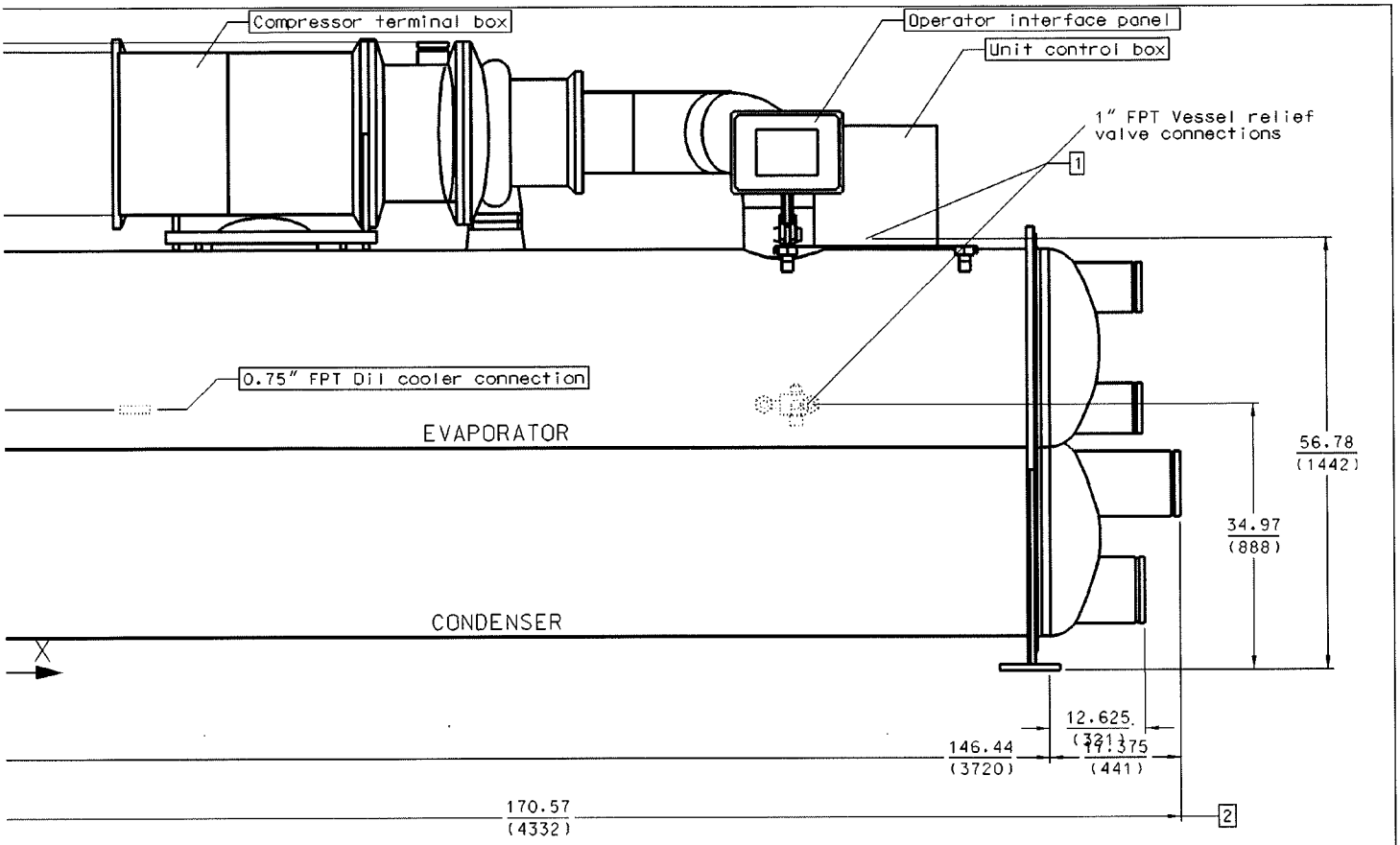

Certified for WSC-400

	Unit Tag: WSC-400			Sales Office: TriState HVAC Equipment, LLP (Phil.)		
	Project Name: Houtzdale Prison			Sales Engineer: Dan Sawron		
	Date: 15/10/2018	Ver/Rev:	Sheet: 3 of 3	Scale: NTS	Tolerance: +/- 1.0"	Dwg Units: in (mm)

:2612WE2CR2VCN4E/A/LMVSS40

)proved in writing by Daikin Applied. Purchaser must determine that the equipment is fit and sufficient for the job specifications

Certified for WSC-400

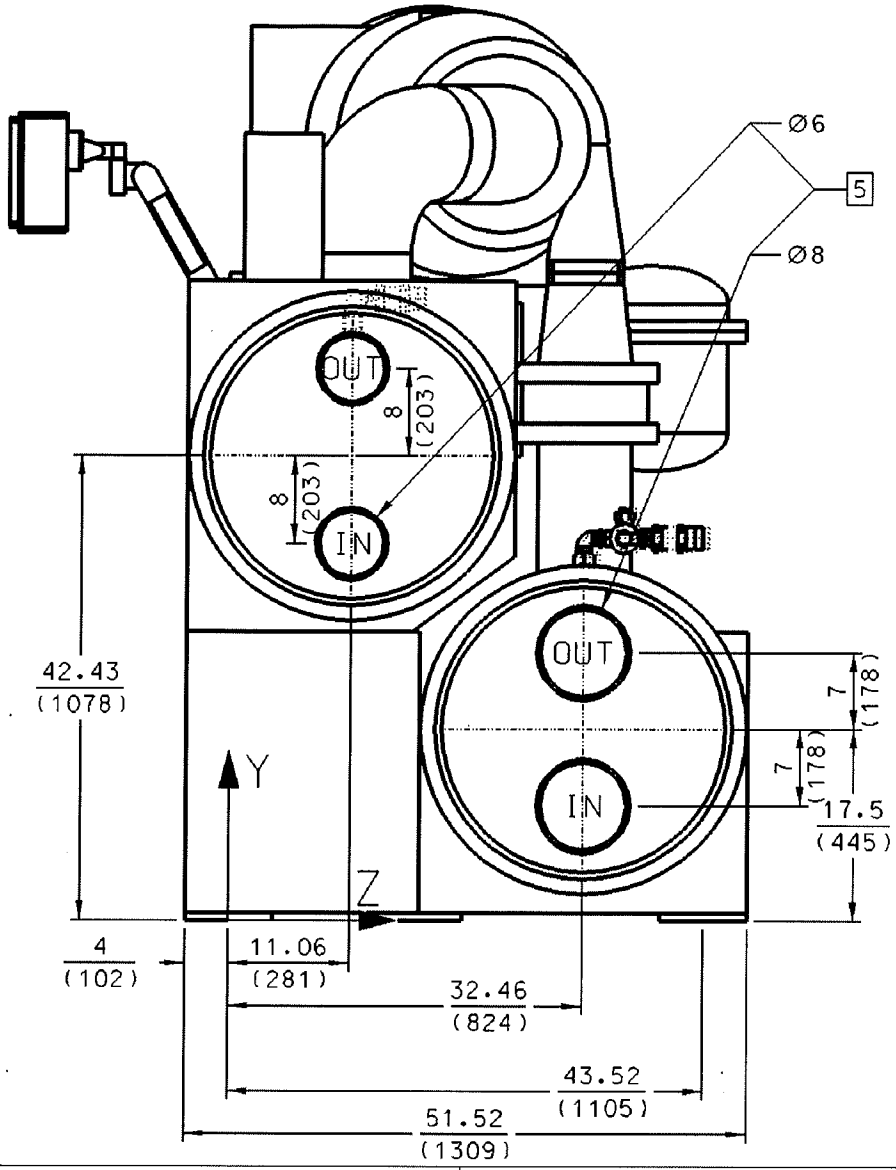

	Unit Tag: WSC-400			Sales Office: TriState HVAC Equipment, LLP (Phil.)		
	Project Name: Houtzdale Prison			Sales Engineer: Dan Sawron		
	Date: 15/10/2018	Ver/Rev:	Sheet: 4 of 4	Scale: NTS	Tolerance: +/- 1.0"	Dwg Units: in (mm)

:2612WE2CR2VCN4E/A/LMVSS40

)proved in writing by Daikin Applied. Purchaser must determine that the equipment is fit and sufficient for the job specifications

Certified for WSC-400

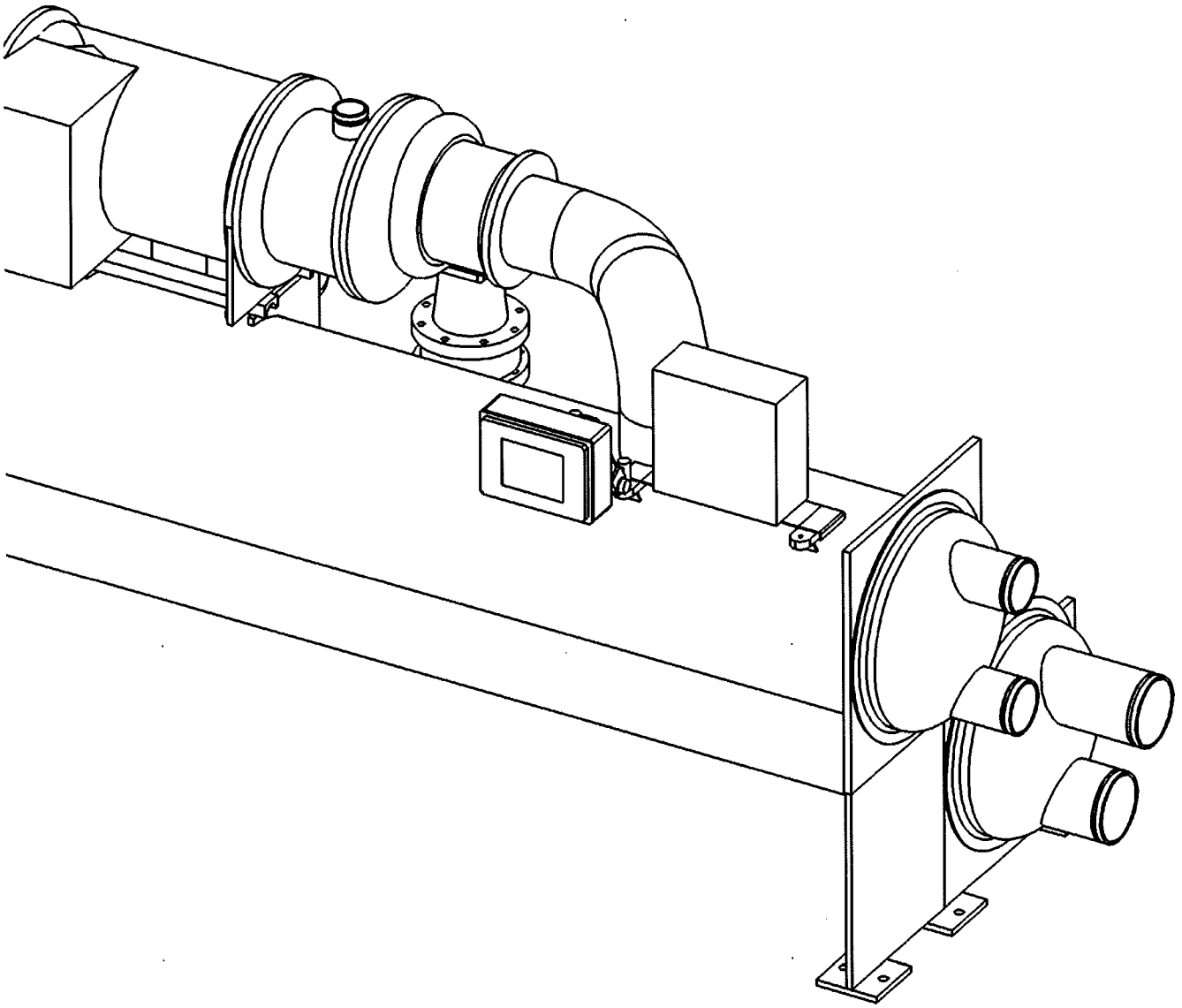

	Unit Tag: WSC-400			Sales Office: TriState HVAC Equipment, LLP (Phil.)		
	Project Name: Houtzdale Prison			Sales Engineer: Dan Sawron		
	Date: 15/10/2018	Ver/Rev:	Sheet: 5 of 5	Scale: NTS	Tolerance: +/- 1.0"	Dwg Units: in (mm)

:2612WE2CR2VCN4E/A/LMVSS40

)proved in writing by Daikin Applied. Purchaser must determine that the equipment is fit and sufficient for the job specifications

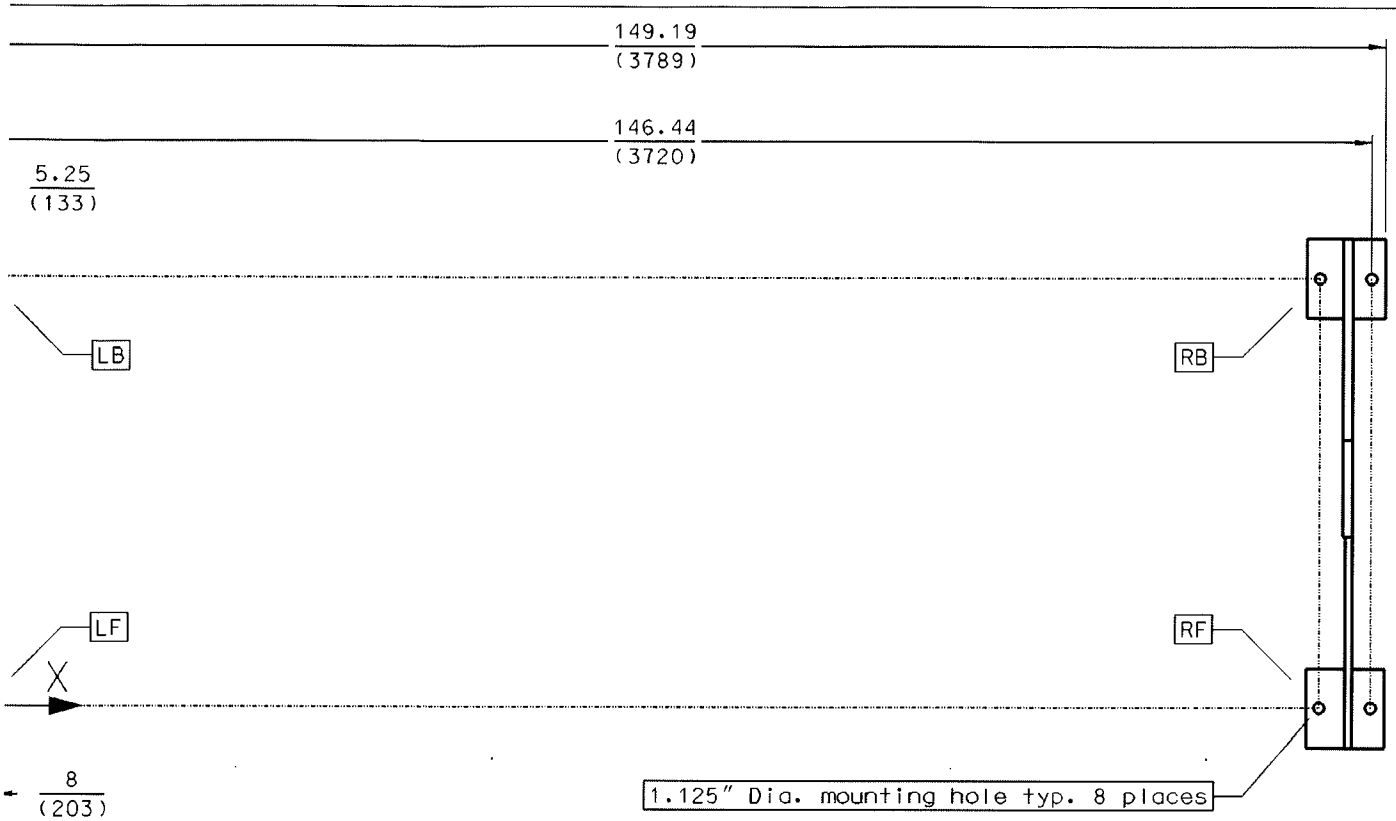

Certified for WSC-400

	Unit Tag: WSC-400			Sales Office: TriState HVAC Equipment, LLP (Phil.)		
	Project Name: Houtzdale Prison			Sales Engineer: Dan Sawron		
	Date: 15/10/2018	Ver/Rev:	Sheet: 6 of 6	Scale: NTS	Tolerance: +/- 1.0"	Dwg Units: in (mm)

:2612WE2CR2VCN4E/A/LMVSS40

)proved in writing by Daikin Applied. Purchaser must determine that the equipment is fit and sufficient for the job specifications

MVSS Solid State Medium Voltage Free Standing Starters (2300-4160V)

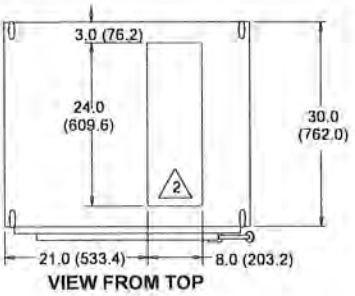

VIEW FROM TOP

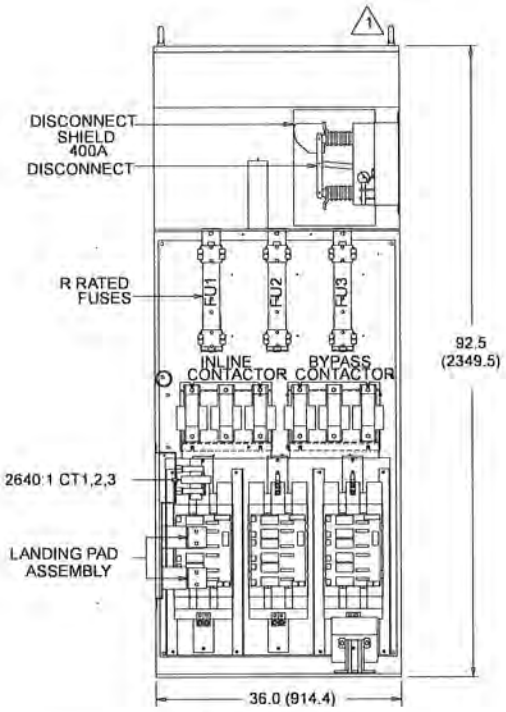

FRONT INTERIOR VIEW

NOTES:

1. REMOVABLE LIFTING EYEBOLTS, PLUG HOLES IF REMOVED.
2. CABLE ENTRY/EXIT AREA. NO CUTOUT SUPPLIED. CUSTOMER TO CUT AS REQUIRED.
3. ENCLOSURE COLOR: ANSI 61 GREY
4. TIGHTEN BOLTS PER CHART BELOW

STEEL BOLT TORQUE IN FOOT-POUNDS				
1/4-20	5/16-18	3/8-16	1/2-13	5/8-11
5	12	20	50	95

5. STARTER WEIGHT: APPOXIMATELY 1800LBS

Product Drawing	Unit Tag: WSC-400			DAIKIN		
Product: Centrifugal Chiller Starter	Project Name: Houtzdale Prison			13600 Industrial Park Blvd. Minneapolis, MN 55441		
Model: MVSS	Sales Office: TriState HVAC Equipment, LLP (Phil.)			www.DaikinApplied.com		Software Version: 13.90
Sales Engineer: Joseph Marlowe	Oct. 12, 2018	Ver/Rev:	Sheet 1 of 1	Scale: NTS	Tolerance: +/-1.0"	Dwg Units: in [mm]

No change to this drawing may be made unless approved in writing by Daikin Applied. Purchaser must determine that the equipment is fit and sufficient for the job specifications.

BALTIMORE AIRCOIL COMPANY

QUOTE

BAC Quote # Q190522778
Project: SCI HOUTZDALE
Date: 10/16/2018

TO: ENTECH ENGINEERING

ATTN: Mark Ray

Dear Mark,

We are pleased to offer the following equipment scope for your consideration:

OPTION 1 – 400 NOMINAL TONS – BAC SERIES 3000E TO REPLACE MODEL 3-3373 / SERIAL 94-400594/5/6

Quantity: 3

Model: **S3E-1020-07M**

Certified Capacity: 1200.00 USGPM of water from 95.00°F to 85.00°F at 78.00°F entering air wet bulb.

Fan Motor(s): One (1) 20 HP fan motor(s): Totally Enclosed, Air Over (TEAO), 1 Speed/1 Winding - Premium Efficiency (Inverter Duty), suitable for 460 volt, 3 phase, 60 hertz electrical service and Space Heater. Drives are based on 0 inches ESP.

NOTE: Inverter Duty fan motors, furnished in accordance with NEMA Standard Mg.1 -- Part 31, are required for applications using variable frequency drives for fan motor control.

Equipment Summary:

- Induced Draft, Crossflow Cooling Tower
- Quality Assurance - ISO 9001 Compliant
- Unit Energy Efficiency per ASHRAE Standard 90.1-2016
- CTI Certified Thermal Performance
- Heavy Gauge G235 Galvanized Steel Construction
- Standard Axial Fan with Belt-Driven BALTIDRIVE® Power Train
- Galvanized Steel Fan Guard
- Fiberglass Reinforced Polyester (FRP) Casing Panels
- PVC Fill and Integral Drift Eliminators
- Combined Air Inlet Shields
- Structure Designed in accordance with the IBC and ASCE/SEI 7
- One (1) 8" End Inlet Connection with EASY CONNECT® Piping Arrangement
- One (1) 8" End Outlet Pump Suction Connection
- One (1) 8" Bottom Equalizer Connection
- One (1) Mechanical Float Valve Assembly
- Single Inlet Piping Drain Valve - Manual Valve
- One (1) Mechanical Vibration Cutout Switch with Local Reset
- Extended Bearing Lubrication Lines
- Hot Water Basin Weir Dams Designed for 50% Flow Reduction
- Internal Walkway

Shipping Weight: Each BAC Model S3E-1020-07M cooling tower ships in one (1) section weighing approximately lbs.

[redacted]

VOLUNTARY ADD OPTIONS – MATERIALS OF CONSTRUCTION

- Welded 304 Stainless Steel Cold Water Basins with Manufacturer's 5-Year (from date of shipment) Leak-Proof Warranty

[redacted]

- Welded 304 Stainless Steel Cold Water Basins with Manufacturer's 5-Year (from date of shipment) Leak-Proof Warranty and 304 Stainless Steel How Water Basins to Include Stainless Steel Covers and Weir Dams

[redacted]

VOLUNTARY ADD OPTIONS – ELECTRIC BASIN HEATERS

- Six (6) 12 kW Electric Immersion Basin Heaters (2-Per Cooling Tower Cell) and Heater Controls (1-Per Cooling Tower Cell) to Include a Low Water Cutout Switch, Thermostat and NEMA 3R Heater Control Panel with Contactor and Disconnect Switch

[redacted]

VOLUNARY ADD OPTION – VARIABLE FREQUENCY DRIVES

- Three (3) 20 HP, 460/3/60, EATON DH1 Series Variable Frequency Drives with each to include a NEMA 3R Enclosure, 2-Contactor Bypass with Isolation Contactor and Space Heater.

[redacted]

- Three (3) NEMA 3R Temperature Control Panels each with Thermostat and Bulb-well

[redacted]

VOLUNTARY ADD OPTION – FACTORY AUTHORIZED START-UP SERVICE

- One (1) Day Factory Authorized Start-up Service with Documentation

[redacted]

Unless otherwise indicated price does not include vibration isolation, starters, variable frequency drives, power factor correction capacitors, disconnects, wiring, piping, valves, off loading, rigging, support steel, installation, operating controls, heat trace, insulation, start-up, commissioning, field performance test, labor warranty, or taxes.

Quotation valid: 30 Days
Terms: Net 30 Days

Best Regards,

Tim Scouler/Jim Fear
THE MORIN COMPANY LLC

Equipment Details - All Information is Per Unit

Unit Type:

This unit will be a factory fabricated, induced draft, crossflow cooling tower with vertical discharge.

Quality Assurance:

Each unit will be manufactured under closely-controlled conditions using standardized parts to ensure each unit is built precisely to the same high-quality design and construction standards. The design, manufacture, and business processes of Baltimore Aircoil Company are ISO 9001:2015 compliant.

Unit Efficiency:

The unit(s) will comply with the energy efficiency requirements established by ASHRAE Standard 90.1-2016.

CTI Certification:

The thermal performance of this BAC unit has been certified through performance tests conducted by the Cooling Technology Institute in accordance with their standard STD-201 RS. Your equipment may be selected for factory-testing to verify CTI certified performance. Such certification by an independent third party assures engineers and users that the published thermal capacities accurately reflect the actual unit performance. CTI certification eliminates the additional costs of on-site, individual unit testing, oversizing the equipment or operating cost penalties from deficient equipment.

Materials of Construction:

Standard materials of construction are G235 (Z700 metric) galvanized steel. This is the heaviest galvanizing commonly available in the industry, and is the accepted standard for normal evaporative cooling applications. This standard corrosion protection system will provide reliable protection and long life for most industrial cooling, air conditioning and refrigeration applications.

Fan & Drive System:

The unit features the exclusive BALTIDRIVE® Power Train fan drive system with over a decade of proven performance in tens of thousands of installations world wide. Backed by an extensive five year drive warranty that even includes the motor, the BALTIDRIVE® Powertrain fan drive system utilizes special corrosion resistant materials of construction and state-of-the-art-technology to ensure long, trouble-free life, ease of maintenance and reliable year round performance for all fan drive components. The five-year warranty provided on all BAC evaporative cooling equipment is the most comprehensive fan motor and mechanical equipment warranty available in the industry. Included in the five-year warranty are the mechanical equipment support, fan(s), fan shaft(s), bearings, sheaves, and fan motor(s).

Fan Guard(s):

The fan guard mounted on the top of the cylinder is all welded construction of heavy gauge, hot-dip galvanized steel. The fan guard is shipped loose for field installation.

Casing Panels:

Casing panels are constructed of corrosion resistant, UV protected Fiberglass Reinforced Polyester (FRP).

Fill:

The patented BAC fill and eliminators used in the unit have been engineered to provide a maximum air/water contact and low air pressure drop to ensure efficient heat transfer with minimum fan power requirements. The fill is impervious to rot, decay, fungus or biological attack and has a flame spread rating of 5 per ASTM Standard E-84-77a. The eliminators have three changes in air direction to effectively strip entrained moisture from the leaving airstream.

Equipment Structure:

The structure of this product has been designed and analyzed in accordance with the wind and seismic load requirements of the 2006 IBC, 2009 IBC, 2012 IBC, 2015 IBC, ASCE/SEI 7-05, and ASCE/SEI 7-10. For more information and specific wind and seismic load capacity ratings, please see the Certificate of Wind and Seismic Load Capacity.

Water Inlet(s):

The unit is provided the unique EASY CONNECT® Piping Arrangement which provides you with a single end inlet piping connection per cell to significantly reduce the field piping required, and eliminate all overhead piping. The symmetrical internal piping from EASY CONNECT® Piping Arrangement to the hot water distribution systems assures each distribution system with balanced flow. Therefore, eliminating the need for flow control valves within the tower. The end inlet connection will be grooved to suit a mechanical coupling and beveled for welding, located on the end of the cooling tower. In short, the EASY CONNECT® Piping Arrangement will reduce your installation while enhancing the appearance of the final installation.

Water Outlet(s):

The water outlet connection is on the end of the unit to facilitate connection to field piping. Please see the submittal package for the connection type, size and location. Additionally, a large area lift out strainer screen with anti-vortexing hood is included to prevent air entrainment.

Equalizer/Bypass Connection:

The unit will be provided with a bottom equalizer connection. Please see the submittal drawing package for the size and location of the connection.

Basin Water Level Control:

Basin water level control assemblies will consist of large-diameter polystyrene-filled floats, adjustable linkages, and corrosion resistant make-up valves.

Single Inlet Piping Drain Valve:

A 1/2" manual valve can be provided on the 1/2" drain connection of the EASY CONNECT® Piping Arrangement. The valve is manually opened for cold weather operation and closed during the warm weather to achieve full thermal performance.

Vibration Cutout Switch:

A mechanical vibration switch mounted in a NEMA 4 enclosure, can be furnished on the fan support framework. The switch trips when subjected to excessive mechanical equipment vibration. The single switch can be used to directly terminate fan motor operation or be used to signal an alarm.

Extended Lubrication Lines:

To simplify maintenance of the drive bearing, extended lubrication lines ending in standard grease fittings are provided. The grease fittings are located on the inside of the access door. The extended lubrication lines allow evaporative cooling equipment operators to lubricate the drive bearings from the outside of the unit.

Hot Water Basin Weirs:

The unit is supplied with a hot water basin dam in each hot water basin to accommodate water flow rates of 50% of the design flow. The weir dams provide a even water distribution over the fill at below design water flow rate conditions.

Air Intake Option:

Corrosion and UV Resistant PVC inlet shields are provided to protect the cold water basin from debris, sunlight and reduce the potential for algae growth.

Internal Access Option:

A galvanized steel walkway in the plenum facilitates access to the fan drive components and basin strainer screens.

Baltimore Aircoil Company

Cooling Tower Selection Report

Version:	8.9.1 NA
Product data correct as of:	August 15, 2018

Project Name:	SCI Houtzdale
Selection Name:	BAC Series 3000E
Project State/Province:	Pennsylvania
Project Country:	United States
Date:	October 16, 2018

Model Information

Product Line:	Series 3000
Model:	S3E-1020-07M
Number of Units:	1
Fan Type:	Standard Fan
Fan Motor:	(1) 20.00 = 20.00 HP/Unit
Total Standard Fan Power:	Full Speed, 20.00 BHP/Unit
Intake Option:	None
Internal Option:	None
Discharge Option:	None

Design Conditions

Flow Rate:	1,200.00 USGPM
Hot Water Temp.:	95.00 °F
Cold Water Temp.:	85.00 °F
Wet Bulb Temp.:	78.00 °F
Tower Pumping Head:	4.91 psi
Reserve Capability:	6.32 %

Thermal performance at design conditions and standard total fan motor power is certified by the Cooling Technology Institute (CTI).

Engineering Data, per Unit

Unit Length:	09' 09.25"
Unit Width:	20' 00.50"
Unit Height:	12' 01.00"
Air Flow:	105,620 CFM
Approximate Shipping Weight:	10,040 pounds
Heaviest Section:	10,040 pounds
Approximate Operating Weight:	20,330 pounds

Heater kW Data (Optional)

-20°F (-28.9°C) Ambient Heaters: (2) 12 kW

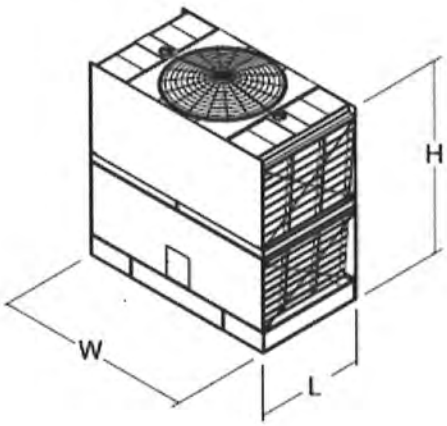

Minimum Distance Required for Single Unit:
(For multiple units, refer to Layout Guidelines)

From Solid Wall:	5 ft.
From 50% Open Wall:	3 ft.

Energy Rating:

76.85 per ASHRAE 90.1, ASHRAE 189 and CA Title 24.

Note: These unit weights and dimensions account for the selected fan type for the standard cataloged drive configuration, but they do not account for other options/accessories. Please contact your local BAC sales representative for weights and dimensions of units with other options/accessories.

Baltimore Aircoil Company

Cooling Tower Selection Report

Version:	8.9.1 NA
Product data correct as of:	August 15, 2018

Project Name:	SCI Houtzdale
Selection Name:	BAC Series 3000E
Project State/Province:	Pennsylvania
Project Country:	United States
Date:	October 16, 2018

Model & Fan Motor

Product Line:	Series 3000
Model:	S3E-1020-07M
Number of Units:	1
Fan Motor:	(1) 20.00 = 20.00 HP/Unit
Total Standard Fan Power:	Full Speed, 20.00 BHP/Unit

Model Accessories

Intake Option:	None
Internal Option:	None
Discharge Option:	None
Fan Type:	Standard Fan

Design Conditions @ Standard Total Fan Motor Power per Unit (20.00 HP)

Thermal performance at design conditions and standard total fan motor power is certified by the Cooling Technology Institute (CTI).

Flow Rate:	1,200.00	USGPM
Hot Water Temp.:	95.00	°F
Cold Water Temp.:	85.00	°F
Wet Bu b Temp.:	78.00	°F

Predicted Performance

Fan Motor Alternative = Full Speed, 20.00 BHP

Flow Rate = 1200.00 USGPM (100.00% of Design)

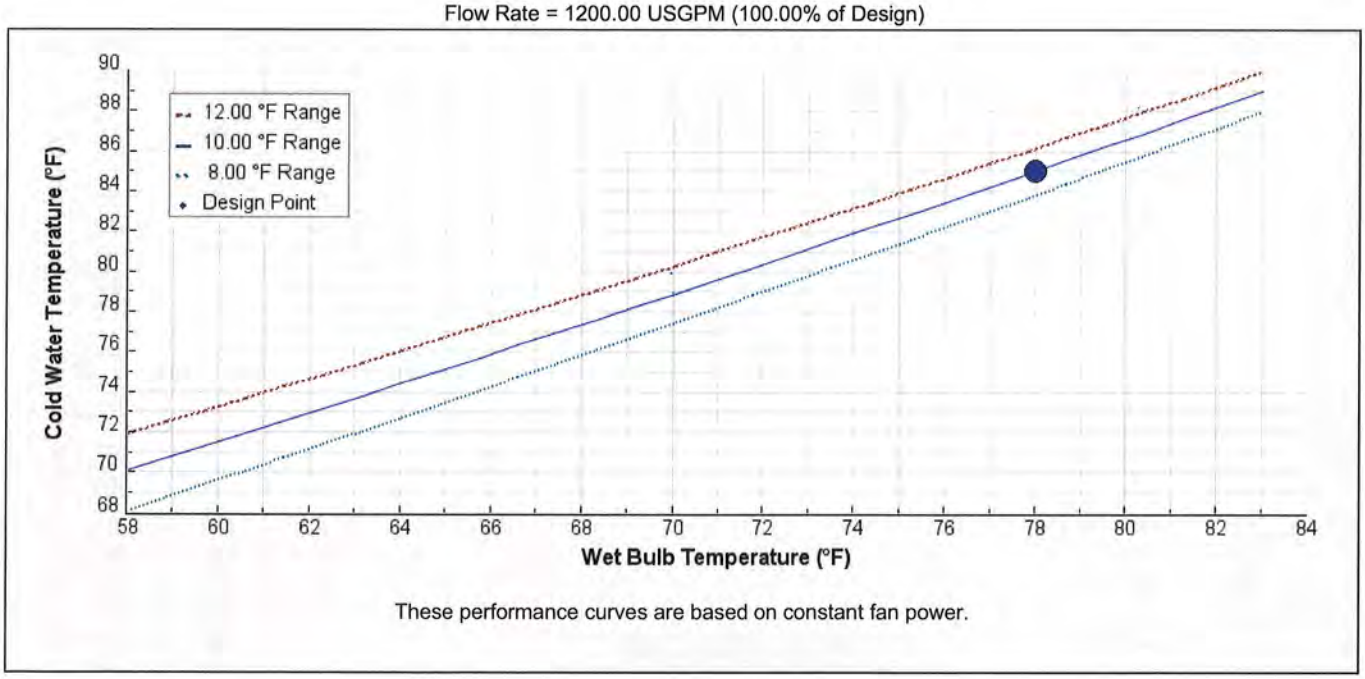

These performance curves are based on constant fan power.

Warning	Applies to Design Conditions	Applies to Off Design Conditions
1. One or more selection parameters are outside of CTI Certification limits.	No	Yes

Baltimore Aircoil Company

Cooling Tower Selection Report

Version: 8.9.1 NA
Product data correct as of: August 15, 2018

Project Name: SCI Houtzdale
Selection Name: BAC Series 3000E
Project State/Province: Pennsylvania
Project Country: United States
Date: October 16, 2018

Model Information

Product Line: Series 3000
Model: S3E-1020-07M
Number of Units: 1
Fan Type: Standard Fan
Fan Motor: (1) 20.00 = 20.00 HP/Unit
Total Standard Fan Power: Full Speed, 20.00 BHP/Unit

Intake Option: None
Internal Option: None
Discharge Option: None

Octave band and A-weighted sound pressure levels (Lp) are expressed in decibels (dB) reference 0.0002 microbar. Sound power levels (Lw) are expressed in decibels (dB) reference one picowatt. Octave band 1 has a center frequency of 63 Hertz.

Top
Sound Pressure (dB)

Octave Band	Distance 5 ft.	Distance 50 ft.
1	84	73
2	84	73
3	83	73
4	80	67
5	77	62
6	71	57
7	67	53
8	65	50
A-wgtd	**82**	**69**

Air Inlet
Sound Pressure (dB)

Octave Band	Distance 5 ft.	Distance 50 ft.
1	81	67
2	83	66
3	81	68
4	75	65
5	69	60
6	63	51
7	58	45
8	54	42
A-wgtd	**77**	**66**

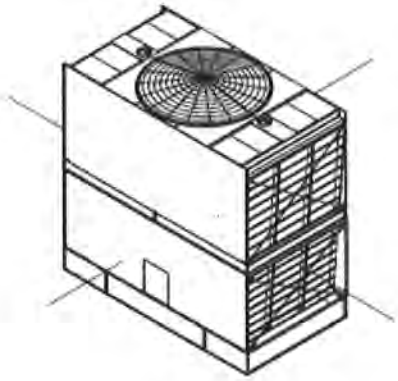

End
Sound Pressure (dB)

Octave Band	Distance 5 ft.	Distance 50 ft.
1	78	71
2	78	65
3	75	67
4	69	61
5	64	56
6	57	48
7	50	43
8	47	38
A-wgtd	**71**	**63**

End
Sound Pressure (dB)

Octave Band	Distance 5 ft.	Distance 50 ft.
1	78	71
2	78	65
3	75	67
4	69	61
5	64	56
6	57	48
7	50	43
8	47	38
A-wgtd	**71**	**63**

Air Inlet
Sound Pressure (dB)

Octave Band	Distance 5 ft.	Distance 50 ft.
1	81	67
2	83	66
3	81	68
4	75	65
5	69	60
6	63	51
7	58	45
8	54	42
A-wgtd	**77**	**66**

Sound Power (dB)

Octave Band	Center Frequency (Hertz)	Lw
1	63	102
2	125	100
3	250	101
4	500	96
5	1000	91
6	2000	84
7	4000	80
8	8000	77

Note: The use of frequency inverters (variable frequency drives) can increase sound levels.

2018© Baltimore Aircoil Company. All Rights Reserved.

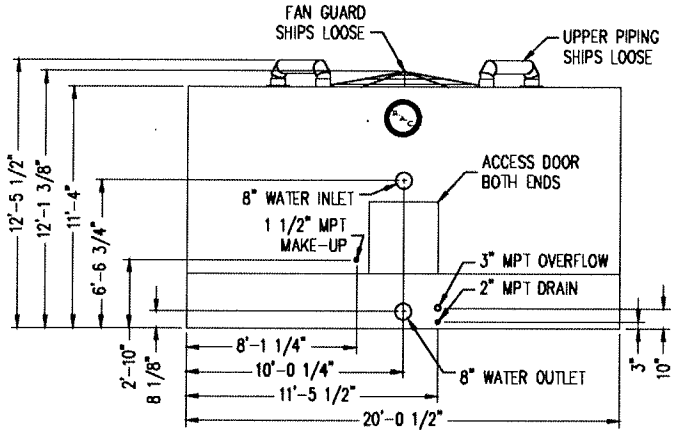

END ELEVATION (FACE A)

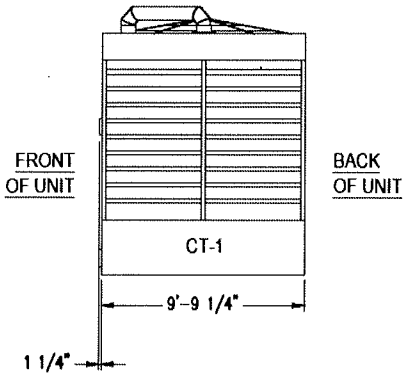

SIDE ELEVATION

Notes

1) Drawings are not to scale. All dimensions are in feet and inches. Weights are in pounds and include options and accessories.
2) Unless otherwise indicated, connections 3" and smaller are MPT. Connections 4" and larger are grooved to suit a mechanical coupling and beveled for welding.
3) Field piping should be fabricated at time of installation. Pre-fabrication of pipe work is not recommended.
4) Do not support piping from unit connections. All necessary piping supports to be supplied by others.
5) For weight loadings and support requirements, refer to the suggested unit support drawing.
6) The area above the fan discharge must be unobstructed.
7) Due to height limitations on truck shipments, some items shown may ship loose for field installation.
8) Outlet connections are sized for pump suction application at the design flow rate. They are based on the maximum flow rate through the strainer with basin water at standard operating level.

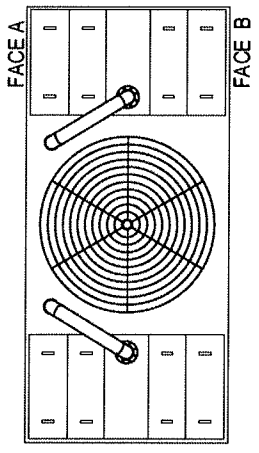

PLAN VIEW

Model Number	Shipping Weight	Operating Weight	Heaviest Section
S3E-1020-07M	10040	20330	10040

ORDER NO: **Q19052277802**

DATE: **10/16/2018 10:22:19 AM**

BALTIMORE AIRCOIL COMPANY

DR
UP-Q

2018© Baltimore Aircoil Company. All Rights Reserved.

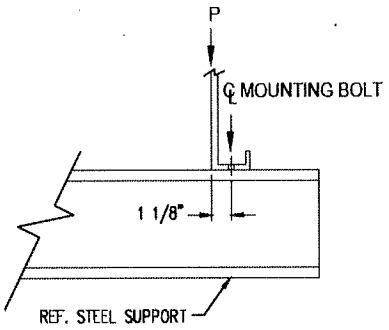

SECTION "A-A"

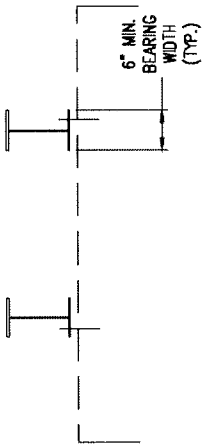

END ELEVATION

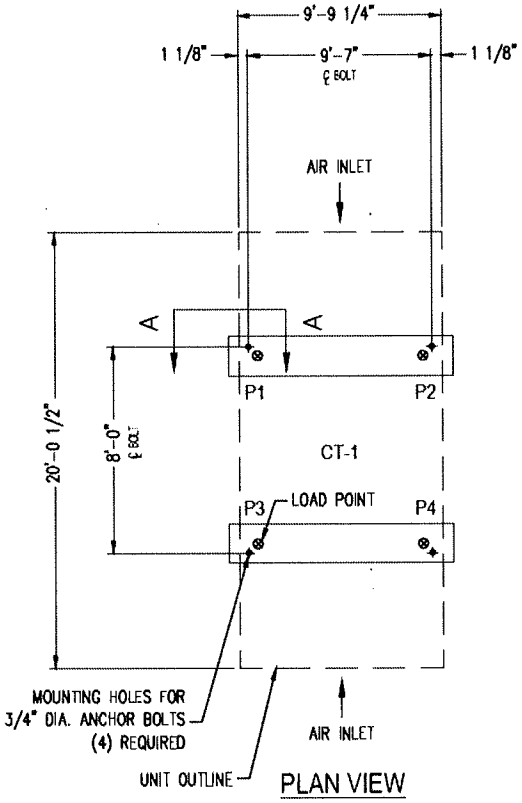

PLAN VIEW

Notes
1) Drawings are not to scale. All dimensions are in feet and inches. Weights are in pounds and include options and accessories.
2) Operating weight and weight loading are for units with water level in basin at overflow.
3) Unit support beams and anchor bolts to be designed and furnished by others.
4) Support beams must be flush and level at top.
5) Steel frame members perpendicular to the support beams and under the air inlet edges of unit must be at least 2" below the top of the support beams.

Model Number	Shipping Weight	Operating Weight	Point "1"	Point "2"	Point "3"	Point "4"	Point "5"	Point "6"	Point "7"	Point "8"	Point "9"	Point "10"
S3E-1020-07M	10040	20330	5083	5083	5083	5083	0	0	0	0	0	0

ORDER NO: **Q19052277802**

DATE: **10/16/2018 10:22:58 AM**

BALTIMORE AIRCOIL COMPANY

3(

DR

SS-Q

2018© Baltimore Aircoil Company. All Rights Reserved.

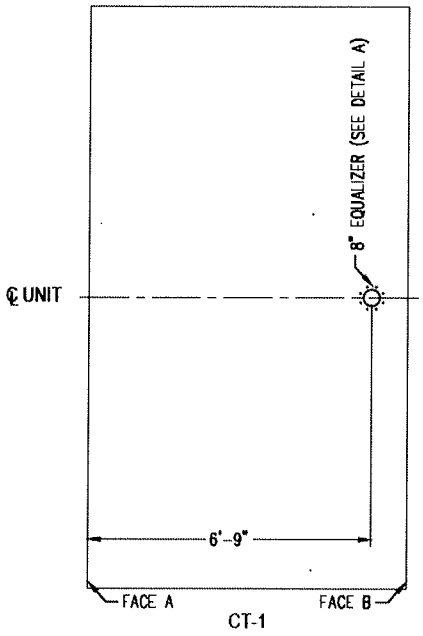

PLAN VIEW

Notes
1) Drawings are not to scale.
2) Do not support piping from unit connections. All necessary piping supports to be supplied by others.
3) Field piping should be fabricated at time of installation. Pre-fabrication of pipe work is not recommended.
4) Connections 3" and smaller are MPT. Connections 4" and larger are grooved to suit a mechanical coupling and beveled for welding unless stated otherwise. For Knockdown and TriArmor units the Overflow and Make-Up will be a FPT connection.
5) Bolt hole patterns are drilled to mate with an ASME Class 150 flat face flange with holes straddling transverse and longitudinal centerlines. The flat face flange and full face gasket are to be furnished by others for mating with the unit.

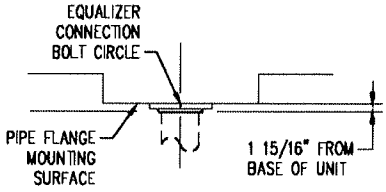

DETAIL A
ELEVATION VIEW
BOTTOM EQUALIZER

ORDER NO: **Q19052277802**	BALTIMORE AIRCOIL COMPANY	3000
DATE: **10/16/2018 10:26:54 AM**		DR **BC-Q**

2018© Baltimore Aircoil Company. All Rights Reserved.

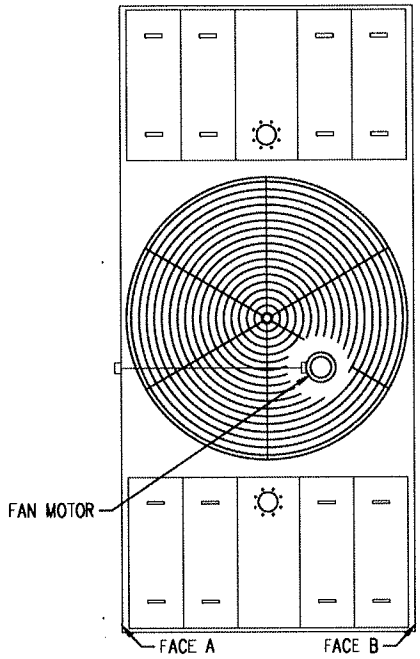

CT-1

PLAN VIEW

Notes
1) Drawings are not to scale.
2) Conduit must be water tight and pitched downward to allow condensation to drain away from fan motor conduit box. Therefore, do not run the conduit through fan deck.
3) All wiring must conform to local and national electrical codes. Junction box/safety switch and all conduit from fan motor conduit box to be sized, provided, and installed by others.
4) Rigid conduit outside casing panel must turn down to junction box.
5) For proper motor orientation see plan view.

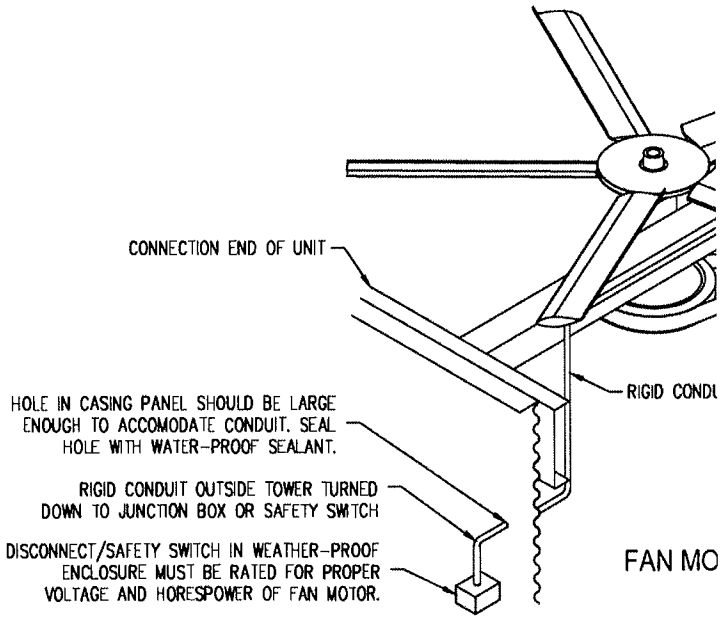

FAN MO

RDER NO: **Q19052277802**

ATE: **10/16/2018 10:25:37 AM**

BALTIMORE AIRCOIL COMPANY

ML

2018© Baltimore Aircoil Company. All Rights Reserved.

OPERATING INSTRUCTIONS

Follow the installation drawings and wiring diagram to ensure the proper operation of the vibration switch. Direct any questions to your local BAC Representative.

NOTE

Moisture inside the switch can lead to switch failure. Care must be taken when replacing the cover on the vibration switch to ensure that the proper watertight seal is obtained.

CAUTION

Before performing any maintenance, adjustment or inspection of the switch, make certain that all power has been disconnected and locked in the off position.

SWITC
Belt

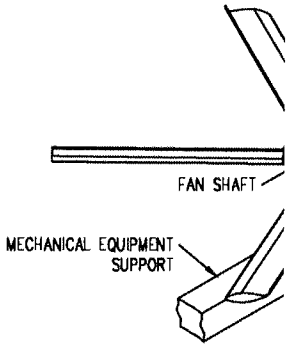

2018© Baltimore Aircoil Company. All Rights Reserved.

Notes
1) Drawings are not to scale.
2) Field piping must be kept clear and supported independently of all unit access accessories.

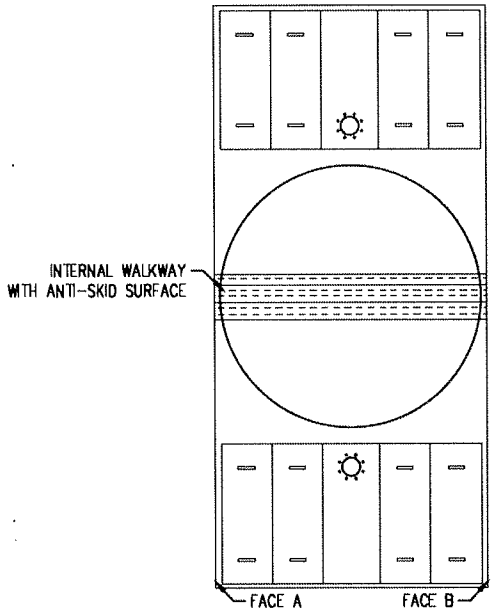

CT-1

PLAN VIEW

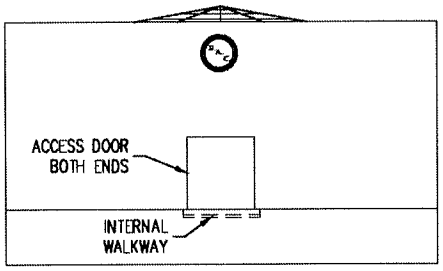

ORDER NO: **Q19052277802**	BALTIMORE AIRCOIL COMPANY	30(
DATE: **10/16/2018 10:28:06 AM**		DR **IA-Q1**

Savings Calculations

ECM #7 Building Automation System Upgrade

Title	**BAS Upgrades & Modifications**
ECM#	**7**
Project:	**SCI Houtzdale**
Site:	**SCI Houtzdale**

Given	Electric Energy Costs		$/kWh	
	Electric Demand Charge		$/kWd	
	Demand Utilization Factor (DUF)	*80%*		(Estimate, percent of time that fan system is on during peak demand period)
	Heating Costs		$/MCF	
	Cooling Costs		$/kWh	

Formula	**EXISTING CONDITIONS**	
	Existing Supply Fan kWh Used	(Supply Fan Horsepower x Load Factor x (% Airflow^Fan Exponent) x 0.746 / Motor Efficiency) x (Annual Op Hours x % of Time at % Airflow)
	Existing Supply Fan kW Demand	(Supply Fan Horsepower x Load Factor x (% Airflow^Fan Exponent) x 0.746 / Motor Efficiency) x (% of Time at % Airflow x DUF x Months/year)
	Existing Return Fan kWh Used	(Return Fan Horsepower x Load Factor x (% Airflow^Fan Exponent) x 0.746 / Motor Efficiency) x (Annual Op Hours x % of Time at % Airflow)
	Existing Return Fan kW Demand	(Return Fan Horsepower x Load Factor x (% Airflow^Fan Exponent) x 0.746 / Motor Efficiency) x (% of Time at % Airflow x DUF x Months/year)
	Existing Heating Required	(1.08 x [(Supply Fan CFM) x (% Airflow)] x (Temp lvg - Temp ent) x Op Hours x % of Time at % of Airflow x (Htg Hrs / Tot. Hrs per Yr) x % of Total Hrs Htg at Full Load) / 1,000,000
	Existing Cooling Required	(4.5 x [(Supply Fan CFM) x (% Airflow)] x (h ent - h lvg) x Op Hours x Bin Hrs at % of Airflow /12,000 x kW/ton
	PROPOSED CONDITIONS	
	Proposed Supply Fan kWh Used	(SF HP x Load Factor x (% Airflow^Fan Exponent) x 0.746 / Motor Efficiency) x (Annual Op Hours x % of Time at % Airflow)
	Proposed Supply Fan kW Demand	(SF HP x Load Factor x (% Airflow^Fan Exponent) x 0.746 / Motor Efficiency) x (% of Time at % Airflow x DUF x Months/year)
	Proposed Return Fan kWh Used	(RF HP x Load Factor x (% Airflow^Fan Exponent) x 0.746 / Motor Efficiency) x (Annual Op Hours x % of Time at % Airflow)
	Proposed Return Fan kW Demand	(RF HP x Load Factor x (% Airflow^Fan Exponent) x 0.746 / Motor Efficiency) x (% of Time at % Airflow x DUF x Months/year)
	Proposed Heating Required	(1.08 x [(SF CFM) x (% Airflow)] x (T lvg - T ent) x Op Hours x % of Time at % of Airflow x (Htg Hrs / Tot. Hrs per Yr) x % of Total Hrs Htg at Full Load) / 1,000,000
	Proposed Cooling Required	(4.5 x [(Supply Fan CFM) x (% Airflow)] x (h ent - h lvg) x Op Hours x Bin Hrs at % of Airflow /12,000 x kW/ton
	*NOTE: THIS CALCULATION IS DONE AT EVERY AIRFLOW	

Result	**Annual Existing Fan Consumption All AHUS**	**1,877,173**	**kWh**	**=>**	$	-
	Annual Existing Cooling Demand	**599**	**Tons**	**=>**		
	Annual Existing Heating Consumption	**93,873**	**CCF**	**=>**	$	-
	Annual Existing Cooling Consumption	**709,755**	**kWh**	**=>**	$	-
	TOTAL EXIST COST PER YEAR				**$**	**-**
	Annual Proposed Fan Consumption	**1,567,354**	**kWh**	**=>**	$	-
	Annual Proposed Cooling Demand	**599**	**Tons**	**=>**		
	Annual Proposed Heating Consumption	**43,574**	**CCF**		$	-
	Annual Proposed Cooling Consumption	**683,434**	**kWh**	**=>**	$	-
	TOTAL NEW COST PER YEAR				**$**	**-**
	Annual Fan Savings	**309,819**	**kWh**	**=>**	$	-
	Annual Demand Savings			**=>**	$	-
	Annual Heating Savings	**50,300**	**CCF**		$	-
	Annual Cooling Savings	**26,321**	**kWh**	**=>**	$	-
	TOTAL SAVINGS PER YEAR				**$**	**-**

A

Title	**BAS Upgrades & Modifications**
ECM#	**7**
Project:	**SCI Houtzdale**
Site:	**SCI Houtzdale**

CONVERSION FACTORS				Design Conditions		
SLR	**93%**	Sensible	/latent	Supply CFM	4,500	
FANHP (F.L.)	**3.55**	HP@	4,500	Total Cooling	104,250	158,000
RAFHP (F.L.)	-	HP@	3,825	Sensible Cooling	96,714	
FMEFF	**88%**	Percent		Air Side TD	19.90	
CFMREF	**4,500**	CFM		Supply HP	5	
DREFF	**97%**	Percent	(@F.L.)	T.S.P.	3.0	
MINVOL	**1,800**	CFM	CFM	Supply Fan Eff	60%	
Conv. Fact.	6,344	60	0.24	Return CFM	3,825	
Off Coil Conditions	62	28.47	28	Return T.S.P.	-	
Btu/CCF	102,800	Heat EX Eff Wtr:		Return Fan HP	-	
kW/Ton	0.95	Heat EX Eff Smr:		Return Fan Eff	60%	

Existing Operation

Bin DB temp/ WetBulb	Average Temp	enthapy OA btu/lb	enthapy Mixed Air btu/lb	Bin hrs	SA air flow CFM	Fan kW	Fan kWh	OA air flow CFM	Discharge Air Temp	MAT Air Temp	Space Temp setpoint	Total Cooling BTU/Hr	Total Cooling kWh/year	Total Cooling Demand Tons	Total Heating BTU/Hr	Total Reheat BTU/Hr	Run Fraction	Existing Heating CCF/year
-15 -11 / -12.6	-12.5	0.0		0	4,500	3.024	-	675	75.0°	59.3°	72°				76,181		100%	-
-10 -6 /-7.1	-7.5	0.0		0	4,500	3.024	-	675	75.0°	60.1°	72°				72,536		100%	-
-5 -1 /-2.9	-2.5	0.0		0	4,500	3.024	-	675	75.0°	60.8°	72°				68,891		100%	-
0-4/1	2.5	0.0		2	4,500	3.024	6	675	75.0°	61.6°	72°				65,246		41%	0.67
5-9/6	7.5	2.9		5	4,500	3.024	15	675	75.0°	62.3°	72°				61,601		39%	1.50
10-14/11	12.5	4.2		77	4,500	3.024	233	675	75.0°	63.1°	72°				57,956		37%	20.41
15-19/15	17.5	5.7		270	4,500	3.024	816	675	75.0°	63.8°	72°				54,311		34%	62.86
20-24/20	22.5	7.3		452	4,500	3.024	1,367	675	75.0°	64.6°	72°				50,666		32%	91.58
25-29/25	27.5	9.0		411	4,500	3.024	1,243	675	75.0°	65.3°	72°				47,021		30%	71.73
30-34/30	32.5	11.1		897	4,500	3.024	2,712	675	75.0°	66.1°	72°				43,376		27%	133.21
35-39/34	37.5	12.8		808	4,500	3.024	2,443	675	75.0°	66.8°	72°				39,731		25%	100.67
40-44/38	42.5	15.1		722	4,500	3.024	2,183	675	75.0°	67.6°	72°				36,086		23%	74.21
45-49/42	47.5	17.0		512	4,500	3.024	1,548	675	75.0°	68.3°	72°				32,441		30%	62.14
50-54/47	52.5	19.7	25.8	659	4,500	3.024	1,993	675	61.6°	69.1°	72°	36,329	660	3.03	-		35%	
55-59/52	57.5	22.9	26.0	829	4,500	3.024	2,507	675	61.6°	69.8°	72°	39,974	1,006	3.33	-		38%	
60-64/56	62.5	25.7	26.2	1010	4,500	3.024	3,054	675	61.6°	70.6°	72°	43,619	1,459	3.63	-		42%	
65-69/60	67.5	28.7	26.4	812	4,500	3.024	2,455	675	61.6°	71.3°	72°	47,264	1,377	3.94			45%	
70-74/63	72.5	31.0	26.6	470	4,500	3.024	1,421	675	61.6°	72.1°	72°	50,909	925	4.24			49%	
75-79/66	77.5	32.4	26.8	436	4,500	3.024	1,318	675	61.6°	72.8°	72°	54,554	985	4.55			52%	
80-84/69	82.5	33.8	26.9	265	4,500	3.024	801	675	61.6°	73.6°	72°	58,199	682	4.85			56%	
85-89/72	87.5	36.5	27.1	106	4,500	3.024	321	675	61.6°	74.3°	72°	61,844	308	5.15			59%	
90-94/73	92.5	39.2	27.3	17	4,500	3.024	51	675	61.6°	75.1°	72°	65,489	55	5.46			63%	
				8,760.00			26,488						7,458	5.46				619

CONVERSION FACTORS				Design Conditions		
SLR	**93%**	Sensible	/latent	Supply CFM	4,500	
FANHP (F.L.)	**3.55**	HP@	4,500	Total Cooling	104,250	158,000
RAFHP (F.L.)	-	HP@	3,825	Sensible Cooling	96,714	
FMEFF	**88%**	Percent		Air Side TD	19.90	
CFMREF	**4,500**	CFM		Supply HP	5.00	
DREFF	**97%**	Percent	(@F.L.)	T.S.P.	3.0	
MINVOL	**1,800**	CFM	CFM	Supply Fan Eff	60%	
Conv. Fact.	6,344	60	0.24	Return CFM	3,825	
Off Coil Conditions	62	28.47	28	Return T.S.P.	-	
Btu/CCF	102,800	Heat EX Eff Wtr:		Return Fan HP	-	
kW/Ton	0.95	Heat EX Eff Smr:		Return Fan Eff	60%	

Proposed Operation

Bin DB temp/ WetBulb	Average Temp	enthapy OA btu/lb	enthapy Mixed Air btu/lb	Bin hrs	SA air flow CFM	Fan kW	Fan kWh	OA air flow CFM	Discharge Air Temp	MAT Air Temp	Space Temp setpoint	Total Cooling BTU/Hr	Total Cooling kWh/year	Total Cooling Demand Tons	Total Heating BTU/Hr	Total Reheat BTU/Hr	Run Fraction	Proposed Heating CCF/year
-15 -11 / -12.6	-12.5	0.0		0	4,500	3.024	-	675	75.0°	59.3°	72°				76,181		100%	-
-10 -6 /-7.1	-7.5	0.0		0	4,500	3.024	-	675	74.0°	60.1°	72°				67,676		100%	-
-5 -1 /-2.9	-2.5	0.0		0	4,500	3.024	-	675	73.0°	60.8°	72°				59,171		100%	-
0-4/1	2.5	0.0		2	4,500	3.024	6	675	72.0°	61.6°	72°				50,666		32%	0.41
5-9/6	7.5	2.9		5	4,500	3.024	15	675	71.0°	62.3°	72°				42,161		27%	0.70
10-14/11	12.5	4.2		77	4,500	3.024	233	675	70.0°	63.1°	72°				33,656		21%	6.88
15-19/15	17.5	5.7		270	4,500	3.024	816	675	69.0°	63.8°	72°				25,151		16%	13.48
20-24/20	22.5	7.3		452	4,500	3.024	1,367	675	68.0°	64.6°	72°				16,646		11%	9.89
25-29/25	27.5	9.0		411	4,500	3.024	1,243	675	67.0°	65.3°	72°				8,140		5%	2.15
30-34/30	32.5	11.1		897	4,500	3.024	2,712	675	66.0°	66.1°	72°				-		0%	-
35-39/34	37.5	12.8		808	4,500	3.024	2,443	675	65.0°	66.8°	72°				-		0%	-
40-44/38	42.5	15.1		722	4,500	3.024	2,183	675	64.0°	67.6°	72°				-		0%	-
45-49/42	47.5	17.0		512	4,500	3.024	1,548	675	63.0°	68.3°	72°				-		40%	-
50-54/47	52.5	19.7	25.8	659	4,500	3.024	1,993	675	61.6°	69.1°	72°	36,329	660	3.03	-		35%	
55-59/52	57.5	22.9	26.0	829	4,500	3.024	2,507	675	61.6°	69.8°	72°	39,974	1,006	3.33	-		38%	
60-64/56	62.5	25.7	26.2	1010	4,500	3.024	3,054	675	61.6°	70.6°	72°	43,619	1,459	3.63	-		42%	
65-69/60	67.5	28.7	26.4	812	4,500	3.024	2,455	675	61.6°	71.3°	72°	47,264	1,377	3.94			45%	
70-74/63	72.5	31.0	26.6	470	4,500	3.024	1,421	675	61.6°	72.1°	72°	50,909	925	4.24			49%	
75-79/66	77.5	32.4	26.8	436	4,500	3.024	1,318	675	61.6°	72.8°	72°	54,554	985	4.55			52%	
80-84/69	82.5	33.8	26.9	265	4,500	3.024	801	675	61.6°	73.6°	72°	58,199	682	4.85			56%	
85-89/72	87.5	36.5	27.1	106	4,500	3.024	321	675	61.6°	74.3°	72°	61,844	308	5.15			59%	
90-94/73	92.5	39.2	27.3	17	4,500	3.024	51	675	61.6°	75.1°	72°	65,489	55	5.46			63%	
				8,760.00			26,488						7,458	5.46				34

Title	**BAS Upgrades & Modifications**
ECM#	**7**
Project:	**SCI Houtzdale**
Site:	**SCI Houtzdale**

CONVERSION FACTORS				Design Conditions		
SLR	**82%**	Sensible	/latent	Supply CFM	5,500	
FANHP (F.L.)	**4.33**	HP@	5,500	Total Cooling	170,250	160,000
RAFHP (F.L.)	-	HP@	4,675	Sensible Cooling	139,590	
FMEFF	**90%**	Percent		Air Side TD	23.50	
CFMREF	**5,500**	CFM		Supply HP	8	
DREFF	**97%**	Percent	(@F.L.)	T.S.P.	3.0	
MINVOL	**2,200**	CFM	CFM	Supply Fan Eff	60%	
Conv. Fact.	6,344	60	0.24	Return CFM	4,675	
Off Coil Conditions	57	24.18	28	Return T.S.P.	-	
Btu/CCF	102,800	Heat EX Eff Wtr:		Return Fan HP	-	
kW/Ton	0.95	Heat EX Eff Smr:		Return Fan Eff	60%	

Existing Operation

Bin DB temp/ WetBulb	Average Temp	enthapy OA btu/lb	enthapy Mixed Air btu/lb	Bin hrs	SA air flow CFM	Fan kW	Fan kWh	OA air flow CFM	Discharge Air Temp	MAT Air Temp	Heat Pipe Air Temp DT °F	MAT Air Temp w/ Hpipe	Space Temp setpoint	Total Cooling BTU/Hr	Total Cooling kWh/year	Total Cooling Demand Tons	Total Heating BTU/Hr	Total Reheat BTU/Hr	Run Fraction	Existing Heating CCF/year
-15 -11 / -12.6	-12.5	0.0		0	5,500	3.613	-	825	79.1°	59.3°	0.0°	59.3°	72°				117,464		100%	-
-10 -6 /-7.1	-7.5	0.0		0	5,500	3.613	-	825	79.1°	60.1°	0.0°	60.1°	72°				113,009		100%	-
-5 -1 /-2.9	-2.5	0.0		0	5,500	3.613	-	825	79.1°	60.8°	0.0°	60.8°	72°				108,554		100%	-
0-4/1	2.5	0.0		2	5,500	3.613	7	825	79.1°	61.6°	0.0°	61.6°	72°				104,099		65%	1.69
5-9/6	7.5	2.9		5	5,500	3.613	18	825	79.1°	62.3°	0.0°	62.3°	72°				99,644		62%	3.87
10-14/11	12.5	4.2		77	5,500	3.613	278	825	79.1°	63.1°	0.0°	63.1°	72°				95,189		59%	54.38
15-19/15	17.5	5.7		270	5,500	3.613	976	825	79.1°	63.8°	0.0°	63.8°	72°				90,734		57%	173.26
20-24/20	22.5	7.3		452	5,500	3.613	1,633	825	79.1°	64.6°	0.0°	64.6°	72°				86,279		54%	262.26
25-29/25	27.5	9.0		411	5,500	3.613	1,485	825	79.1°	65.3°	0.0°	65.3°	72°				81,824		51%	214.48
30-34/30	32.5	11.1		897	5,500	3.613	3,241	825	79.1°	66.1°	0.0°	66.1°	72°				77,369		48%	418.52
35-39/34	37.5	12.8		808	5,500	3.613	2,919	825	79.1°	66.8°	0.0°	66.8°	72°				72,914		46%	334.83
40-44/38	42.5	15.1		722	5,500	3.613	2,609	825	79.1°	67.6°	0.0°	67.6°	72°				68,459		43%	263.75
45-49/42	47.5	17.0		512	5,500	3.613	1,850	825	79.1°	68.3°	0.0°	68.3°	72°				64,003		40%	163.47
50-54/47	52.5	19.7	25.8	659	5,500	3.613	2,381	825	56.7°	69.1°	0.0°	69.1°	72°	73,508	1,656	6.13	-		43%	
55-59/52	57.5	22.9	26.0	829	5,500	3.613	2,995	825	56.7°	69.8°	0.0°	69.8°	72°	77,963	2,343	6.50	-		46%	
60-64/56	62.5	25.7	26.2	1010	5,500	3.613	3,649	825	56.7°	70.6°	0.0°	70.6°	72°	82,418	3,190	6.87	-		48%	
65-69/60	67.5	28.7	26.4	812	5,500	3.613	2,934	825	56.7°	71.3°	0.0°	71.3°	72°	86,873	2,850	7.24			51%	
70-74/63	72.5	31.0	26.6	470	5,500	3.613	1,698	825	56.7°	72.1°	0.0°	72.1°	72°	91,328	1,823	7.61			54%	
75-79/66	77.5	32.4	26.8	436	5,500	3.613	1,575	825	56.7°	72.8°	0.0°	72.8°	72°	95,783	1,860	7.98			56%	
80-84/69	82.5	33.8	26.9	265	5,500	3.613	957	825	56.7°	73.6°	0.0°	73.6°	72°	100,238	1,238	8.35			59%	
85-89/72	87.5	36.5	27.1	106	5,500	3.613	383	825	56.7°	74.3°	0.0°	74.3°	72°	104,693	540	8.72			61%	
90-94/73	92.5	39.2	27.3	17	5,500	3.613	61	825	56.7°	75.1°	0.0°	75.1°	72°	109,148	94	9.10			64%	
				8,760.00			31,651								15,594	9.10				1,891

CONVERSION FACTORS				Design Conditions		
SLR	**82%**	Sensible	/latent	Supply CFM	5,500	
FANHP (F.L.)	**4.33**	HP@	5,500	Total Cooling	170,250	160,000
RAFHP (F.L.)	-	HP@	4,675	Sensible Cooling	139,590	
FMEFF	**90%**	Percent		Air Side TD	23.50	
CFMREF	**5,500**	CFM		Supply HP	8	
DREFF	**97%**	Percent	(@F.L.)	T.S.P.	3.0	
MINVOL	**2,200**	CFM	CFM	Supply Fan Eff	60%	
Conv. Fact.	6,344	60	0.24	Return CFM	4,675	
Off Coil Conditions	57	24.18	28	Return T.S.P.	-	
Btu/CCF	102,800	Heat EX Eff Wtr:		Return Fan HP	-	
kW/Ton	0.95	Heat EX Eff Smr:		Return Fan Eff	60%	

Proposed Operation

Bin DB temp/ WetBulb	Average Temp	enthapy OA btu/lb	enthapy Mixed Air btu/lb	Bin hrs	SA air flow CFM	Fan kW	Fan kWh	OA air flow CFM	Discharge Air Temp	MAT Air Temp	Heat Pipe Air Temp DT °F	MAT Air Temp w/ Hpipe	Space Temp setpoint	Total Cooling BTU/Hr	Total Cooling kWh/year	Total Cooling Demand Tons	Total Heating BTU/Hr	Total Reheat BTU/Hr	Run Fraction	Proposed Heating CCF/year
-15 -11 / -12.6	-12.5	0.0		0	5,500	3.613	-	825	79.1°	59.3°	0.0°	59.3°	72°				117,464		100%	-
-10 -6 /-7.1	-7.5	0.0		0	5,500	3.613	-	825	79.1°	60.1°	0.0°	60.1°	72°				113,009		100%	-
-5 -1 /-2.9	-2.5	0.0		0	5,500	3.613	-	825	79.1°	60.8°	0.0°	60.8°	72°				108,554		100%	-
0-4/1	2.5	0.0		2	5,500	3.613	7	825	79.1°	61.6°	0.0°	61.6°	72°				104,099		65%	1.69
5-9/6	7.5	2.9		5	5,500	3.613	18	825	78.1°	62.3°	0.0°	62.3°	72°				93,704		59%	3.42
10-14/11	12.5	4.2		77	5,500	3.613	278	825	77.1°	63.1°	0.0°	63.1°	72°				83,309		52%	41.65
15-19/15	17.5	5.7		270	5,500	3.613	976	825	76.1°	63.8°	0.0°	63.8°	72°				72,914		46%	111.89
20-24/20	22.5	7.3		452	5,500	3.613	1,633	825	75.1°	64.6°	0.0°	64.6°	72°				62,518		39%	137.70
25-29/25	27.5	9.0		411	5,500	3.613	1,485	825	74.1°	65.3°	0.0°	65.3°	72°				52,123		33%	87.04
30-34/30	32.5	11.1		897	5,500	3.613	3,241	825	73.1°	66.1°	0.0°	66.1°	72°				41,728		26%	121.74
35-39/34	37.5	12.8		808	5,500	3.613	2,919	825	72.1°	66.8°	0.0°	66.8°	72°				31,333		20%	61.83
40-44/38	42.5	15.1		722	5,500	3.613	2,609	825	71.1°	67.6°	0.0°	67.6°	72°				20,938		13%	24.67
45-49/42	47.5	17.0		512	5,500	3.613	1,850	825	70.1°	68.3°	0.0°	68.3°	72°				10,543		40%	26.93
50-54/47	52.5	19.7	25.8	659	5,500	3.613	2,381	825	56.7°	69.1°	0.0°	69.1°	72°	73,508	1,656	6.13	-		43%	
55-59/52	57.5	22.9	26.0	829	5,500	3.613	2,995	825	56.7°	69.8°	0.0°	69.8°	72°	77,963	2,343	6.50	-		46%	
60-64/56	62.5	25.7	26.2	1010	5,500	3.613	3,649	825	56.7°	70.6°	0.0°	70.6°	72°	82,418	3,190	6.87	-		48%	
65-69/60	67.5	28.7	26.4	812	5,500	3.613	2,934	825	56.7°	71.3°	0.0°	71.3°	72°	86,873	2,850	7.24			51%	
70-74/63	72.5	31.0	26.6	470	5,500	3.613	1,698	825	56.7°	72.1°	0.0°	72.1°	72°	91,328	1,823	7.61			54%	
75-79/66	77.5	32.4	26.8	436	5,500	3.613	1,575	825	56.7°	72.8°	0.0°	72.8°	72°	95,783	1,860	7.98			56%	
80-84/69	82.5	33.8	26.9	265	5,500	3.613	957	825	56.7°	73.6°	0.0°	73.6°	72°	100,238	1,238	8.35			59%	
85-89/72	87.5	36.5	27.1	106	5,500	3.613	383	825	56.7°	74.3°	0.0°	74.3°	72°	104,693	540	8.72			61%	
90-94/73	92.5	39.2	27.3	17	5,500	3.613	61	825	56.7°	75.1°	0.0°	75.1°	72°	109,148	94	9.10			64%	
				8,760.00			31,651								15,594	9.10				619

Title	**BAS Upgrades & Modifications**
ECM#	**7**
Project:	**SCI Houtzdale**
Site:	**SCI Houtzdale**

CONVERSION FACTORS				Design Conditions		
SLR	**93%**	Sensible	/latent	Supply CFM	4,500	
FANHP (F.L.)	**3.27**	HP@	4,500	Total Cooling	104,250	130,000
RAFHP (F.L.)	-	HP@	3,825	Sensible Cooling	97,200	
FMEFF	**88%**	Percent		Air Side TD	20.00	
CFMREF	**4,500**	CFM		Supply HP	5	
DREFF	**97%**	Percent	(@F.L.)	T.S.P.	3.0	
MINVOL	**1,800**	CFM	CFM	Supply Fan Eff	65%	
Conv. Fact.	6,344	60	0.24	Return CFM	3,825	
Off Coil Conditions	61	26.24	28	Return T.S.P.	-	
Btu/CCF	102,800	Heat EX Eff Wtr:		Return Fan HP	-	
kW/Ton	0.95	Heat EX Eff Smr:		Return Fan Eff	60%	

Existing Operation

Bin DB temp/ WetBulb	Average Temp	enthapy OA btu/lb	enthapy Mixed Air btu/lb	Bin hrs	SA air flow CFM	Fan kW	Fan kWh	OA air flow CFM	Discharge Air Temp	MAT Air Temp	Heat Pipe Air Temp DT °F	MAT Air Temp w/ Hpipe	Space Temp setpoint	Total Cooling BTU/Hr	Total Cooling kWh/year	Total Cooling Demand Tons	Total Heating BTU/Hr	Total Reheat BTU/Hr	Run Fraction	Existing Heating CCF/year
-15 -11 / -12.6	-12.5	0.0		0	4,500	2.791	-	675	75.0°	59.3°	0.0°	59.3°	72°				76,181		100%	-
-10 -6 /-7.1	-7.5	0.0		0	4,500	2.791	-	675	75.0°	60.1°	0.0°	60.1°	72°				72,536		100%	-
-5 -1 /-2.9	-2.5	0.0		0	4,500	2.791	-	675	75.0°	60.8°	0.0°	60.8°	72°				68,891		100%	-
0-4/1	2.5	0.0		2	4,500	2.791	6	675	75.0°	61.6°	0.0°	61.6°	72°				65,246		50%	0.82
5-9/6	7.5	2.9		5	4,500	2.791	14	675	75.0°	62.3°	0.0°	62.3°	72°				61,601		47%	1.82
10-14/11	12.5	4.2		77	4,500	2.791	215	675	75.0°	63.1°	0.0°	63.1°	72°				57,956		45%	24.81
15-19/15	17.5	5.7		270	4,500	2.791	754	675	75.0°	63.8°	0.0°	63.8°	72°				54,311		42%	76.40
20-24/20	22.5	7.3		452	4,500	2.791	1,262	675	75.0°	64.6°	0.0°	64.6°	72°				50,666		39%	111.31
25-29/25	27.5	9.0		411	4,500	2.791	1,147	675	75.0°	65.3°	0.0°	65.3°	72°				47,021		36%	87.17
30-34/30	32.5	11.1		897	4,500	2.791	2,504	675	75.0°	66.1°	0.0°	66.1°	72°				43,376		33%	161.90
35-39/34	37.5	12.8		808	4,500	2.791	2,255	675	75.0°	66.8°	0.0°	66.8°	72°				39,731		31%	122.36
40-44/38	42.5	15.1		722	4,500	2.791	2,015	675	75.0°	67.6°	0.0°	67.6°	72°				36,086		28%	90.19
45-49/42	47.5	17.0		512	4,500	2.791	1,429	675	75.0°	68.3°	0.0°	68.3°	72°				32,441		45%	93.21
50-54/47	52.5	19.7	25.8	659	4,500	2.791	1,839	675	60.8°	69.1°	0.0°	69.1°	72°	40,217	809	3.35	-		39%	
55-59/52	57.5	22.9	26.0	829	4,500	2.791	2,314	675	60.8°	69.8°	0.0°	69.8°	72°	43,862	1,211	3.66	-		42%	
60-64/56	62.5	25.7	26.2	1010	4,500	2.791	2,819	675	60.8°	70.6°	0.0°	70.6°	72°	47,507	1,731	3.96	-		46%	
65-69/60	67.5	28.7	26.4	812	4,500	2.791	2,266	675	60.8°	71.3°	0.0°	71.3°	72°	51,152	1,613	4.26			49%	
70-74/63	72.5	31.0	26.6	470	4,500	2.791	1,312	675	60.8°	72.1°	0.0°	72.1°	72°	54,797	1,072	4.57			53%	
75-79/66	77.5	32.4	26.8	436	4,500	2.791	1,217	675	60.8°	72.8°	0.0°	72.8°	72°	58,442	1,131	4.87			56%	
80-84/69	82.5	33.8	26.9	265	4,500	2.791	740	675	60.8°	73.6°	0.0°	73.6°	72°	62,087	776	5.17			60%	
85-89/72	87.5	36.5	27.1	106	4,500	2.791	296	675	60.8°	74.3°	0.0°	74.3°	72°	65,732	348	5.48			63%	
90-94/73	92.5	39.2	27.3	17	4,500	2.791	47	675	60.8°	75.1°	0.0°	75.1°	72°	69,377	62	5.78			67%	
				8,760.00			24,451								8,753	5.78				770

CONVERSION FACTORS				Design Conditions		
	93%	Sensible	/latent	Supply CFM	4,500	
FANHP (F.L.)	**3.27**	HP@	4,500	Total Cooling	104,250	130,000
RAFHP (F.L.)	-	HP@	3,825	Sensible Cooling	97,200	
FMEFF	**88%**	Percent		Air Side TD	20.00	
CFMREF	**4,500**	CFM		Supply HP	5	
DREFF	**97%**	Percent	(@F.L.)	T.S.P.	3.0	
MINVOL	**1,800**	CFM	CFM	Supply Fan Eff	0.7	
Conv. Fact.	6,344	60	0.24	Return CFM	3,825	
Off Coil Conditions	61	26.24	28	Return T.S.P.	-	
Ht Pmp COP	102,800	Heat EX Eff Wtr:		Return Fan HP	-	
kW/Ton	0.95	Heat EX Eff Smr:		Return Fan Eff	60%	

Proposed Operation

Bin DB temp/ WetBulb	Average Temp	enthapy OA btu/lb	enthapy Mixed Air btu/lb	Bin hrs	SA air flow CFM	Fan kW	Fan kWh	OA air flow CFM	Discharge Air Temp	MAT Air Temp	Heat Pipe Air Temp DT °F	MAT Air Temp w/ Hpipe	Space Temp setpoint	Total Cooling BTU/Hr	Total Cooling kWh/year	Total Cooling Demand Tons	Total Heating BTU/Hr	Total Reheat BTU/Hr	Run Fraction	Proposed Heating CCF/year
-15 -11 / -12.6	-12.5	0.0		0	4,500	2.791	-	675	75.0°	59.3°	0.0°	59.3°	72°				76,181		100%	-
-10 -6 /-7.1	-7.5	0.0		0	4,500	2.791	-	675	75.0°	60.1°	0.0°	60.1°	72°				72,536		100%	-
-5 -1 /-2.9	-2.5	0.0		0	4,500	2.791	-	675	75.0°	60.8°	0.0°	60.8°	72°				68,891		100%	-
0-4/1	2.5	0.0		2	4,500	2.791	6	675	75.0°	61.6°	0.0°	61.6°	72°				65,246		50%	0.82
5-9/6	7.5	2.9		5	4,500	2.791	14	675	74.0°	62.3°	0.0°	62.3°	72°				56,741		44%	1.54
10-14/11	12.5	4.2		77	4,500	2.791	215	675	73.0°	63.1°	0.0°	63.1°	72°				48,236		37%	17.19
15-19/15	17.5	5.7		270	4,500	2.791	754	675	72.0°	63.8°	0.0°	63.8°	72°				39,731		31%	40.89
20-24/20	22.5	7.3		452	4,500	2.791	1,262	675	71.0°	64.6°	0.0°	64.6°	72°				31,226		24%	42.28
25-29/25	27.5	9.0		411	4,500	2.791	1,147	675	70.0°	65.3°	0.0°	65.3°	72°				22,721		17%	20.35
30-34/30	32.5	11.1		897	4,500	2.791	2,504	675	69.0°	66.1°	0.0°	66.1°	72°				14,216		11%	17.39
35-39/34	37.5	12.8		808	4,500	2.791	2,255	675	68.0°	66.8°	0.0°	66.8°	72°				5,710		4%	2.53
40-44/38	42.5	15.1		722	4,500	2.791	2,015	675	67.0°	67.6°	0.0°	67.6°	72°				-		0%	-
45-49/42	47.5	17.0		512	4,500	2.791	1,429	675	66.0°	68.3°	0.0°	68.3°	72°				-		45%	-
50-54/47	52.5	19.7	25.8	659	4,500	2.791	1,839	675	60.8°	69.1°	0.0°	69.1°	72°	40,217	809	3.35	-		39%	
55-59/52	57.5	22.9	26.0	829	4,500	2.791	2,314	675	60.8°	69.8°	0.0°	69.8°	72°	43,862	1,211	3.66	-		42%	
60-64/56	62.5	25.7	26.2	1010	4,500	2.791	2,819	675	60.8°	70.6°	0.0°	70.6°	72°	47,507	1,731	3.96	-		46%	
65-69/60	67.5	28.7	26.4	812	4,500	2.791	2,266	675	60.8°	71.3°	0.0°	71.3°	72°	51,152	1,613	4.26			49%	
70-74/63	72.5	31.0	26.6	470	4,500	2.791	1,312	675	60.8°	72.1°	0.0°	72.1°	72°	54,797	1,072	4.57			53%	
75-79/66	77.5	32.4	26.8	436	4,500	2.791	1,217	675	60.8°	72.8°	0.0°	72.8°	72°	58,442	1,131	4.87			56%	
80-84/69	82.5	33.8	26.9	265	4,500	2.791	740	675	60.8°	73.6°	0.0°	73.6°	72°	62,087	776	5.17			60%	
85-89/72	87.5	36.5	27.1	106	4,500	2.791	296	675	60.8°	74.3°	0.0°	74.3°	72°	65,732	348	5.48			63%	
90-94/73	92.5	39.2	27.3	17	4,500	2.791	47	675	60.8°	75.1°	0.0°	75.1°	72°	69,377	62	5.78			67%	
				8,760.00			24,451								8,753	5.78				143

Title	**BAS Upgrades & Modifications**
ECM#	**7**
Project:	**SCI Houtzdale**
Site:	**SCI Houtzdale**

CONVERSION FACTORS				Design Conditions		
SLR	**76%**	Sensible	/latent	Supply CFM	2,500	
FANHP (F.L.)	**2.12**	HP@	2,500	Total Cooling	87,750	94,000
RAFHP (F.L.)	**0.15**	HP@	2,125	Sensible Cooling	66,420	
FMEFF	**88%**	Percent		Air Side TD	24.60	
CFMREF	**2,500**	CFM		Supply HP	3	
DREFF	**97%**	Percent	(@F.L.)	T.S.P.	3.5	
MINVOL	**1,000**	CFM	CFM	Supply Fan Eff	65%	
Conv. Fact.	6,344	60	0.24	Return CFM	2,125	
Off Coil Conditions	57	24.18	28	Return T.S.P.	1.5	
Btu/CCF	102,800	Heat EX Eff Wtr:		Return Fan HP	0.5	
kW/Ton	0.95	Heat EX Eff Smr:		Return Fan Eff	60%	

Existing Operation

Bin DB temp/ WetBulb	Average Temp	enthapy OA btu/lb	enthapy Mixed Air btu/lb	Bin hrs	SA air flow CFM	Fan kW	Fan kWh	OA air flow CFM	Discharge Air Temp	MAT Air Temp	Heat Pipe Air Temp DT °F	MAT Air Temp w/ Hpipe	Space Temp setpoint	Total Cooling BTU/Hr	Total Cooling kWh/year	Total Cooling Demand Tons	Total Heating BTU/Hr	Total Reheat BTU/Hr	Run Fraction	Existing Heating CCF/year
-15 -11 / -12.6	-12.5	0.0		0	2,500	1.943	-	375	75.0°	59.3°	0.0°	59.3°	72°				42,323		100%	-
-10 -6 /-7.1	-7.5	0.0		0	2,500	1.943	-	375	75.0°	60.1°	0.0°	60.1°	72°				40,298		100%	-
-5 -1 /-2.9	-2.5	0.0		0	2,500	1.943	-	375	75.0°	60.8°	0.0°	60.8°	72°				38,273		100%	-
0-4/1	2.5	0.0		2	2,500	1.943	4	375	75.0°	61.6°	0.0°	61.6°	72°				36,248		39%	0.35
5-9/6	7.5	2.9		5	2,500	1.943	10	375	75.0°	62.3°	0.0°	62.3°	72°				34,223		36%	0.78
10-14/11	12.5	4.2		77	2,500	1.943	150	375	75.0°	63.1°	0.0°	63.1°	72°				32,198		34%	10.59
15-19/15	17.5	5.7		270	2,500	1.943	525	375	75.0°	63.8°	0.0°	63.8°	72°				30,173		32%	32.61
20-24/20	22.5	7.3		452	2,500	1.943	878	375	75.0°	64.6°	0.0°	64.6°	72°				28,148		30%	47.51
25-29/25	27.5	9.0		411	2,500	1.943	798	375	75.0°	65.3°	0.0°	65.3°	72°				26,123		28%	37.21
30-34/30	32.5	11.1		897	2,500	1.943	1,743	375	75.0°	66.1°	0.0°	66.1°	72°				24,098		26%	69.11
35-39/34	37.5	12.8		808	2,500	1.943	1,570	375	75.0°	66.8°	0.0°	66.8°	72°				22,073		23%	52.23
40-44/38	42.5	15.1		722	2,500	1.943	1,403	375	75.0°	67.6°	0.0°	67.6°	72°				20,048		21%	38.50
45-49/42	47.5	17.0		512	2,500	1.943	995	375	75.0°	68.3°	0.0°	68.3°	72°				18,023		35%	40.28
50-54/47	52.5	19.7	25.8	659	2,500	1.943	1,280	375	56.7°	69.1°	0.0°	69.1°	72°	33,413	664	2.78	-		38%	
55-59/52	57.5	22.9	26.0	829	2,500	1.943	1,611	375	56.7°	69.8°	0.0°	69.8°	72°	35,438	939	2.95	-		40%	
60-64/56	62.5	25.7	26.2	1010	2,500	1.943	1,962	375	56.7°	70.6°	0.0°	70.6°	72°	37,463	1,279	3.12	-		43%	
65-69/60	67.5	28.7	26.4	812	2,500	1.943	1,577	375	56.7°	71.3°	0.0°	71.3°	72°	39,488	1,142	3.29			45%	
70-74/63	72.5	31.0	26.6	470	2,500	1.943	913	375	56.7°	72.1°	0.0°	72.1°	72°	41,513	731	3.46			47%	
75-79/66	77.5	32.4	26.8	436	2,500	1.943	847	375	56.7°	72.8°	0.0°	72.8°	72°	43,538	746	3.63			50%	
80-84/69	82.5	33.8	26.9	265	2,500	1.943	515	375	56.7°	73.6°	0.0°	73.6°	72°	45,563	496	3.80			52%	
85-89/72	87.5	36.5	27.1	106	2,500	1.943	206	375	56.7°	74.3°	0.0°	74.3°	72°	47,588	217	3.97			54%	
90-94/73	92.5	39.2	27.3	17	2,500	1.943	33	375	56.7°	75.1°	0.0°	75.1°	72°	49,613	38	4.13			57%	
				8,760.00			17,018								6,251	4.13				329

CONVERSION FACTORS				Design Conditions		
	76%	Sensible	/latent	Supply CFM	2,500	
FANHP (F.L.)	**2.12**	HP@	2,500	Total Cooling	87,750	94,000
RAFHP (F.L.)	**0.15**	HP@	2,125	Sensible Cooling	66,420	
FMEFF	**88%**	Percent		Air Side TD	24.60	
CFMREF	**2,500**	CFM		Supply HP	3	
DREFF	**97%**	Percent	(@F.L.)	T.S.P.	3.5	
MINVOL	**1,000**	CFM	CFM	Supply Fan Eff	65%	
Conv. Fact.	6,344	60	0.24	Return CFM	2,125	
Off Coil Conditions	57	24.18	28	Return T.S.P.	1.5	
Btu/CCF	102,800	Heat EX Eff Wtr:		Return Fan HP	0.5	
kW/Ton	0.95	Heat EX Eff Smr:		Return Fan Eff	60%	

Proposed Operation

Bin DB temp/ WetBulb	Average Temp	enthapy OA btu/lb	enthapy Mixed Air btu/lb	Bin hrs	SA air flow CFM	Fan kW	Fan kWh	OA air flow CFM	Discharge Air Temp	MAT Air Temp	Heat Pipe Air Temp DT °F	MAT Air Temp w/ Hpipe	Space Temp setpoint	Total Cooling BTU/Hr	Total Cooling kWh/year	Total Cooling Demand Tons	Total Heating BTU/Hr	Total Reheat BTU/Hr	Run Fraction	Proposed Heating CCF/year
-15 -11 / -12.6	-12.5	0.0		0	2,500	1.943	-	375	75.0°	59.3°	0.0°	59.3°	72°				42,323		100%	-
-10 -6 /-7.1	-7.5	0.0		0	2,500	1.943	-	375	75.0°	60.1°	0.0°	60.1°	72°				40,298		100%	-
-5 -1 /-2.9	-2.5	0.0		0	2,500	1.943	-	375	75.0°	60.8°	0.0°	60.8°	72°				38,273		100%	-
0-4/1	2.5	0.0		2	2,500	1.943	4	375	75.0°	61.6°	0.0°	61.6°	72°				36,248		39%	0.35
5-9/6	7.5	2.9		5	2,500	1.943	10	375	74.0°	62.3°	0.0°	62.3°	72°				31,523		34%	0.66
10-14/11	12.5	4.2		77	2,500	1.943	150	375	73.0°	63.1°	0.0°	63.1°	72°				26,798		29%	7.34
15-19/15	17.5	5.7		270	2,500	1.943	525	375	72.0°	63.8°	0.0°	63.8°	72°				22,073		23%	17.45
20-24/20	22.5	7.3		452	2,500	1.943	878	375	71.0°	64.6°	0.0°	64.6°	72°				17,348		18%	18.05
25-29/25	27.5	9.0		411	2,500	1.943	798	375	70.0°	65.3°	0.0°	65.3°	72°				12,623		13%	8.69
30-34/30	32.5	11.1		897	2,500	1.943	1,743	375	69.0°	66.1°	0.0°	66.1°	72°				7,897		8%	7.42
35-39/34	37.5	12.8		808	2,500	1.943	1,570	375	68.0°	66.8°	0.0°	66.8°	72°				3,172		3%	1.08
40-44/38	42.5	15.1		722	2,500	1.943	1,403	375	67.0°	67.6°	0.0°	67.6°	72°				-		0%	-
45-49/42	47.5	17.0		512	2,500	1.943	995	375	66.0°	68.3°	0.0°	68.3°	72°				-		35%	-
50-54/47	52.5	19.7	25.8	659	2,500	1.943	1,280	375	56.7°	69.1°	0.0°	69.1°	72°	33,413	664	2.78	-		38%	
55-59/52	57.5	22.9	26.0	829	2,500	1.943	1,611	375	56.7°	69.8°	0.0°	69.8°	72°	35,438	939	2.95	-		40%	
60-64/56	62.5	25.7	26.2	1010	2,500	1.943	1,962	375	56.7°	70.6°	0.0°	70.6°	72°	37,463	1,279	3.12	-		43%	
65-69/60	67.5	28.7	26.4	812	2,500	1.943	1,577	375	56.7°	71.3°	0.0°	71.3°	72°	39,488	1,142	3.29			45%	
70-74/63	72.5	31.0	26.6	470	2,500	1.943	913	375	56.7°	72.1°	0.0°	72.1°	72°	41,513	731	3.46			47%	
75-79/66	77.5	32.4	26.8	436	2,500	1.943	847	375	56.7°	72.8°	0.0°	72.8°	72°	43,538	746	3.63			50%	
80-84/69	82.5	33.8	26.9	265	2,500	1.943	515	375	56.7°	73.6°	0.0°	73.6°	72°	45,563	496	3.80			52%	
85-89/72	87.5	36.5	27.1	106	2,500	1.943	206	375	56.7°	74.3°	0.0°	74.3°	72°	47,588	217	3.97			54%	
90-94/73	92.5	39.2	27.3	17	2,500	1.943	33	375	56.7°	75.1°	0.0°	75.1°	72°	49,613	38	4.13			57%	

Title	**BAS Upgrades & Modifications**
ECM#	**7**
Project:	**SCI Houtzdale**
Site:	**SCI Houtzdale**

CONVERSION FACTORS				Design Conditions		
SLR	**87%**	Sensible	/latent	Supply CFM	10,500	
FANHP (F.L.)	**8.28**	HP@	10,500	Total Cooling	260,250	328,000
RAFHP (F.L.)	-	HP@	8,925	Sensible Cooling	225,666	
FMEFF	**90%**	Percent		Air Side TD	19.90	
CFMREF	**10,500**	CFM		Supply HP	10	
DREFF	**97%**	Percent	(@F.L.)	T.S.P.	3.0	
MINVOL	**4,200**	CFM	CFM	Supply Fan Eff	60%	
Conv. Fact.	6,344	60	0.24	Return CFM	8,925	
Off Coil Conditions	61	26.07	28	Return T.S.P.	-	
Btu/CCF	102,800	Heat EX Eff Wtr:		Return Fan HP	-	
kW/Ton	0.95	Heat EX Eff Smr:		Return Fan Eff	60%	

Existing Operation

Bin DB temp/ WetBulb	Average Temp	enthapy OA btu/lb	enthapy Mixed Air btu/lb	Bin hrs	SA air flow CFM	Fan kW	Fan kWh	OA air flow CFM	Discharge Air Temp	MAT Air Temp	Heat Pipe Air Temp DT °F	MAT Air Temp w/ Hpipe	Space Temp setpoint	Total Cooling BTU/Hr	Total Cooling kWh/year	Total Cooling Demand Tons	Total Heating BTU/Hr	Total Reheat BTU/Hr	Run Fraction	Existing Heating CCF/year
-15 -11 / -12.6	-12.5	0.0		0	10,500	6.898	-	1,575	75.0°	59.3°	0.0°	59.3°	72°				177,755		100%	-
-10 -6 /-7.1	-7.5	0.0		0	10,500	6.898	-	1,575	75.0°	60.1°	0.0°	60.1°	72°				169,250		100%	-
-5 -1 /-2.9	-2.5	0.0		0	10,500	6.898	-	1,575	75.0°	60.8°	0.0°	60.8°	72°				160,745		100%	-
0-4/1	2.5	0.0		2	10,500	6.898	14	1,575	75.0°	61.6°	0.0°	61.6°	72°				152,240		46%	1.76
5-9/6	7.5	2.9		5	10,500	6.898	34	1,575	75.0°	62.3°	0.0°	62.3°	72°				143,735		44%	3.93
10-14/11	12.5	4.2		77	10,500	6.898	531	1,575	75.0°	63.1°	0.0°	63.1°	72°				135,230		41%	53.54
15-19/15	17.5	5.7		270	10,500	6.898	1,862	1,575	75.0°	63.8°	0.0°	63.8°	72°				126,725		39%	164.86
20-24/20	22.5	7.3		452	10,500	6.898	3,118	1,575	75.0°	64.6°	0.0°	64.6°	72°				118,220		36%	240.19
25-29/25	27.5	9.0		411	10,500	6.898	2,835	1,575	75.0°	65.3°	0.0°	65.3°	72°				109,715		33%	188.11
30-34/30	32.5	11.1		897	10,500	6.898	6,187	1,575	75.0°	66.1°	0.0°	66.1°	72°				101,210		31%	349.36
35-39/34	37.5	12.8		808	10,500	6.898	5,573	1,575	75.0°	66.8°	0.0°	66.8°	72°				92,705		28%	264.03
40-44/38	42.5	15.1		722	10,500	6.898	4,980	1,575	75.0°	67.6°	0.0°	67.6°	72°				84,200		26%	194.62
45-49/42	47.5	17.0		512	10,500	6.898	3,532	1,575	75.0°	68.3°	0.0°	68.3°	72°				75,695		25%	120.83
50-54/47	52.5	19.7	25.8	659	10,500	6.898	4,546	1,575	61.1°	69.1°	0.0°	69.1°	72°	90,437	1,640	7.54	-		35%	
55-59/52	57.5	22.9	26.0	829	10,500	6.898	5,718	1,575	61.1°	69.8°	0.0°	69.8°	72°	98,942	2,469	8.25	-		38%	
60-64/56	62.5	25.7	26.2	1010	10,500	6.898	6,967	1,575	61.1°	70.6°	0.0°	70.6°	72°	107,447	3,547	8.95	-		41%	
65-69/60	67.5	28.7	26.4	812	10,500	6.898	5,601	1,575	61.1°	71.3°	0.0°	71.3°	72°	115,952	3,321	9.66			45%	
70-74/63	72.5	31.0	26.6	470	10,500	6.898	3,242	1,575	61.1°	72.1°	0.0°	72.1°	72°	124,457	2,215	10.37			48%	
75-79/66	77.5	32.4	26.8	436	10,500	6.898	3,007	1,575	61.1°	72.8°	0.0°	72.8°	72°	132,962	2,345	11.08			51%	
80-84/69	82.5	33.8	26.9	265	10,500	6.898	1,828	1,575	61.1°	73.6°	0.0°	73.6°	72°	141,467	1,613	11.79			54%	
85-89/72	87.5	36.5	27.1	106	10,500	6.898	731	1,575	61.1°	74.3°	0.0°	74.3°	72°	149,972	725	12.50			58%	
90-94/73	92.5	39.2	27.3	17	10,500	6.898	117	1,575	61.1°	75.1°	0.0°	75.1°	72°	158,477	130	13.21			61%	
				8,760.00			60,425								18,004	13.21				1,581

CONVERSION FACTORS				Design Conditions		
	87%	Sensible	/latent	Supply CFM	10,500	
FANHP (F.L.)	**8.28**	HP@	10,500	Total Cooling	260,250	328,000
RAFHP (F.L.)	-	HP@	8,925	Sensible Cooling	225,666	
FMEFF	**90%**	Percent		Air Side TD	19.90	
CFMREF	**10,500**	CFM		Supply HP	10.00	
DREFF	**97%**	Percent	(@F.L.)	T.S.P.	3.0	
MINVOL	**4,200**	CFM	CFM	Supply Fan Eff	60%	
Conv. Fact.	6,344	60	0.24	Return CFM	8,925	
Off Coil Conditions	61	26.07	28	Return T.S.P.	-	
Ht Pmp COP	102,800	Heat EX Eff Wtr:		Return Fan HP	-	
kW/Ton	0.95	Heat EX Eff Smr:		Return Fan Eff	60%	

Proposed Operation

Bin DB temp/ WetBulb	Average Temp	enthapy OA btu/lb	enthapy Mixed Air btu/lb	Bin hrs	SA air flow CFM	Fan kW	Fan kWh	OA air flow CFM	Discharge Air Temp	MAT Air Temp	Heat Pipe Air Temp DT °F	MAT Air Temp w/ Hpipe	Space Temp setpoint	Total Cooling BTU/Hr	Total Cooling kWh/year	Total Cooling Demand Tons	Total Heating BTU/Hr	Total Reheat BTU/Hr	Run Fraction	Proposed Heating CCF/year
-15 -11 / -12.6	-12.5	0.0		0	10,500	6.898	-	1,575	75.0°	59.3°	0.0°	59.3°	72°				177,755		100%	-
-10 -6 /-7.1	-7.5	0.0		0	10,500	6.898	-	1,575	75.0°	60.1°	0.0°	60.1°	72°				169,250		100%	-
-5 -1 /-2.9	-2.5	0.0		0	10,500	6.898	-	1,575	75.0°	60.8°	0.0°	60.8°	72°				160,745		100%	-
0-4/1	2.5	0.0		2	10,500	6.898	14	1,575	75.0°	61.6°	0.0°	61.6°	72°				152,240		46%	1.76
5-9/6	7.5	2.9		5	10,500	6.898	34	1,575	74.0°	62.3°	0.0°	62.3°	72°				132,395		40%	3.33
10-14/11	12.5	4.2		77	10,500	6.898	531	1,575	73.0°	63.1°	0.0°	63.1°	72°				112,550		34%	37.09
15-19/15	17.5	5.7		270	10,500	6.898	1,862	1,575	72.0°	63.8°	0.0°	63.8°	72°				92,705		28%	88.23
20-24/20	22.5	7.3		452	10,500	6.898	3,118	1,575	71.0°	64.6°	0.0°	64.6°	72°				72,860		22%	91.23
25-29/25	27.5	9.0		411	10,500	6.898	2,835	1,575	70.0°	65.3°	0.0°	65.3°	72°				53,015		16%	43.92
30-34/30	32.5	11.1		897	10,500	6.898	6,187	1,575	69.0°	66.1°	0.0°	66.1°	72°				33,170		10%	37.52
35-39/34	37.5	12.8		808	10,500	6.898	5,573	1,575	68.0°	66.8°	0.0°	66.8°	72°				13,325		4%	5.45
40-44/38	42.5	15.1		722	10,500	6.898	4,980	1,575	67.0°	67.6°	0.0°	67.6°	72°				-		0%	-
45-49/42	47.5	17.0		512	10,500	6.898	3,532	1,575	66.0°	68.3°	0.0°	68.3°	72°				-		25%	-
50-54/47	52.5	19.7	25.8	659	10,500	6.898	4,546	1,575	61.1°	69.1°	0.0°	69.1°	72°	90,437	1,640	7.54	-		35%	
55-59/52	57.5	22.9	26.0	829	10,500	6.898	5,718	1,575	61.1°	69.8°	0.0°	69.8°	72°	98,942	2,469	8.25	-		38%	
60-64/56	62.5	25.7	26.2	1010	10,500	6.898	6,967	1,575	61.1°	70.6°	0.0°	70.6°	72°	107,447	3,547	8.95	-		41%	
65-69/60	67.5	28.7	26.4	812	10,500	6.898	5,601	1,575	61.1°	71.3°	0.0°	71.3°	72°	115,952	3,321	9.66			45%	
70-74/63	72.5	31.0	26.6	470	10,500	6.898	3,242	1,575	61.1°	72.1°	0.0°	72.1°	72°	124,457	2,215	10.37			48%	
75-79/66	77.5	32.4	26.8	436	10,500	6.898	3,007	1,575	61.1°	72.8°	0.0°	72.8°	72°	132,962	2,345	11.08			51%	
80-84/69	82.5	33.8	26.9	265	10,500	6.898	1,828	1,575	61.1°	73.6°	0.0°	73.6°	72°	141,467	1,613	11.79			54%	
85-89/72	87.5	36.5	27.1	106	10,500	6.898	731	1,575	61.1°	74.3°	0.0°	74.3°	72°	149,972	725	12.50			58%	
90-94/73	92.5	39.2	27.3	17	10,500	6.898	117	1,575	61.1°	75.1°	0.0°	75.1°	72°	158,477	130	13.21			61%	
				8,760.00			60,425								18,004	13.21				309

Title	**BAS Upgrades & Modifications**
ECM#	**7**
Project:	**SCI Houtzdale**
Site:	**SCI Houtzdale**

CONVERSION FACTORS				Design Conditions		
SLR	**93%**	Sensible	/latent	Supply CFM	10,500	
FANHP (F.L.)	**8.14**	HP@	10,500	Total Cooling	243,750	326,000
RAFHP (F.L.)	-	HP@	8,925	Sensible Cooling	226,800	
FMEFF	**90%**	Percent		Air Side TD	20.00	
CFMREF	**10,500**	CFM		Supply HP	10	
DREFF	**97%**	Percent	(@F.L.)	T.S.P.	3.0	
MINVOL	**4,200**	CFM	CFM	Supply Fan Eff	60%	
Conv. Fact.	6,344	60	0.24	Return CFM	8,925	
Off Coil Conditions	61	26.34	28	Return T.S.P.	-	
Btu/CCF	102,800	Heat EX Eff Wtr:		Return Fan HP	-	
kW/Ton	0.95	Heat EX Eff Smr:		Return Fan Eff	60%	

Existing Operation

Bin DB temp/ WetBulb	Average Temp	enthapy OA btu/lb	enthapy Mixed Air btu/lb	Bin hrs	SA air flow CFM	Fan kW	Fan kWh	OA air flow CFM	Discharge Air Temp	MAT Air Temp	Heat Pipe Air Temp DT °F	MAT Air Temp w/ Hpipe	Space Temp setpoint	Total Cooling BTU/Hr	Total Cooling kW/Hyear	Total Cooling Demand Tons	Total Heating BTU/Hr	Total Reheat BTU/Hr	Run Fraction	Existing Heating CCF/year
-15 -11 / -12.6	-12.5	0.0		0	10,500	6.783	-	1,575	75.0°	59.3°	0.0°	59.3°	72°				177,755		100%	-
-10 -6 /-7.1	-7.5	0.0		0	10,500	6.783	-	1,575	75.0°	60.1°	0.0°	60.1°	72°				169,250		100%	-
-5 -1 /-2.9	-2.5	0.0		0	10,500	6.783	-	1,575	75.0°	60.8°	0.0°	60.8°	72°				160,745		100%	-
0-4/1	2.5	0.0		2	10,500	6.783	14	1,575	75.0°	61.6°	0.0°	61.6°	72°				152,240		47%	1.77
5-9/6	7.5	2.9		5	10,500	6.783	34	1,575	75.0°	62.3°	0.0°	62.3°	72°				143,735		44%	3.95
10-14/11	12.5	4.2		77	10,500	6.783	522	1,575	75.0°	63.1°	0.0°	63.1°	72°				135,230		41%	53.87
15-19/15	17.5	5.7		270	10,500	6.783	1,831	1,575	75.0°	63.8°	0.0°	63.8°	72°				126,725		39%	165.87
20-24/20	22.5	7.3		452	10,500	6.783	3,066	1,575	75.0°	64.6°	0.0°	64.6°	72°				118,220		36%	241.66
25-29/25	27.5	9.0		411	10,500	6.783	2,788	1,575	75.0°	65.3°	0.0°	65.3°	72°				109,715		34%	189.26
30-34/30	32.5	11.1		897	10,500	6.783	6,084	1,575	75.0°	66.1°	0.0°	66.1°	72°				101,210		31%	351.50
35-39/34	37.5	12.8		808	10,500	6.783	5,481	1,575	75.0°	66.8°	0.0°	66.8°	72°				92,705		28%	265.65
40-44/38	42.5	15.1		722	10,500	6.783	4,897	1,575	75.0°	67.6°	0.0°	67.6°	72°				84,200		26%	195.82
45-49/42	47.5	17.0		512	10,500	6.783	3,473	1,575	75.0°	68.3°	0.0°	68.3°	72°				75,695		40%	193.33
50-54/47	52.5	19.7	25.8	659	10,500	6.783	4,470	1,575	61.0°	69.1°	0.0°	69.1°	72°	91,571	1,795	7.63	-		38%	
55-59/52	57.5	22.9	26.0	829	10,500	6.783	5,623	1,575	61.0°	69.8°	0.0°	69.8°	72°	100,076	2,697	8.34	-		41%	
60-64/56	62.5	25.7	26.2	1010	10,500	6.783	6,851	1,575	61.0°	70.6°	0.0°	70.6°	72°	108,581	3,867	9.05	-		45%	
65-69/60	67.5	28.7	26.4	812	10,500	6.783	5,508	1,575	61.0°	71.3°	0.0°	71.3°	72°	117,086	3,615	9.76			48%	
70-74/63	72.5	31.0	26.6	470	10,500	6.783	3,188	1,575	61.0°	72.1°	0.0°	72.1°	72°	125,591	2,408	10.47			52%	
75-79/66	77.5	32.4	26.8	436	10,500	6.783	2,957	1,575	61.0°	72.8°	0.0°	72.8°	72°	134,096	2,546	11.17			55%	
80-84/69	82.5	33.8	26.9	265	10,500	6.783	1,797	1,575	61.0°	73.6°	0.0°	73.6°	72°	142,601	1,750	11.88			59%	
85-89/72	87.5	36.5	27.1	106	10,500	6.783	719	1,575	61.0°	74.3°	0.0°	74.3°	72°	151,106	786	12.59			62%	
90-94/73	92.5	39.2	27.3	17	10,500	6.783	115	1,575	61.0°	75.1°	0.0°	75.1°	72°	159,611	141	13.30			65%	
				8,760.00			59,418								19,605	13.30				1,663

CONVERSION FACTORS				Design Conditions		
	93%	Sensible	/latent	Supply CFM	10,500	
FANHP (F.L.)	**8.14**	HP@	10,500	Total Cooling	243,750	326,000
RAFHP (F.L.)	-	HP@	8,925	Sensible Cooling	226,800	
FMEFF	**90%**	Percent		Air Side TD	20.00	
CFMREF	**10,500**	CFM		Supply HP	10	
DREFF	**97%**	Percent	(@F.L.)	T.S.P.	3.0	
MINVOL	**4,200**	CFM	CFM	Supply Fan Eff	60%	
Conv. Fact.	6,344	60	0.24	Return CFM	8,925	
Off Coil Conditions	61	26.34	28	Return T.S.P.	-	
Ht Pmp COP	102,800	Heat EX Eff Wtr:		Return Fan HP	-	
kW/Ton	0.95	Heat EX Eff Smr:		Return Fan Eff	60%	

Bin DB temp/ WetBulb	Average Temp	enthapy OA btu/lb	enthapy Mixed Air btu/lb	Bin hrs	SA air flow CFM	Fan kW	Fan kWh	OA air flow CFM	Discharge Air Temp	MAT Air Temp	Heat Pipe Air Temp DT °F	MAT Air Temp w/ Hpipe	Space Temp setpoint	Total Cooling BTU/Hr	Total Cooling kW/Hyear	Total Cooling Demand Tons	Total Heating BTU/Hr	Total Reheat BTU/Hr	Run Fraction	Proposed Heating CCF/year
-15 -11 / -12.6	-12.5	0.0		0	10,500	6.783	-	1,575	75.0°	59.3°	0.0°	59.3°	72°				177,755		100%	-
-10 -6 /-7.1	-7.5	0.0		0	10,500	6.783	-	1,575	75.0°	60.1°	0.0°	60.1°	72°				169,250		100%	-
-5 -1 /-2.9	-2.5	0.0		0	10,500	6.783	-	1,575	75.0°	60.8°	0.0°	60.8°	72°				160,745		100%	-
0-4/1	2.5	0.0		2	10,500	6.783	14	1,575	75.0°	61.6°	0.0°	61.6°	72°				152,240		47%	1.77
5-9/6	7.5	2.9		5	10,500	6.783	34	1,575	74.0°	62.3°	0.0°	62.3°	72°				132,395		41%	3.35
10-14/11	12.5	4.2		77	10,500	6.783	522	1,575	73.0°	63.1°	0.0°	63.1°	72°				112,550		35%	37.31
15-19/15	17.5	5.7		270	10,500	6.783	1,831	1,575	72.0°	63.8°	0.0°	63.8°	72°				92,705		28%	88.77
20-24/20	22.5	7.3		452	10,500	6.783	3,066	1,575	71.0°	64.6°	0.0°	64.6°	72°				72,860		22%	91.79
25-29/25	27.5	9.0		411	10,500	6.783	2,788	1,575	70.0°	65.3°	0.0°	65.3°	72°				53,015		16%	44.19
30-34/30	32.5	11.1		897	10,500	6.783	6,084	1,575	69.0°	66.1°	0.0°	66.1°	72°				33,170		10%	37.75
35-39/34	37.5	12.8		808	10,500	6.783	5,481	1,575	68.0°	66.8°	0.0°	66.8°	72°				13,325		4%	5.49
40-44/38	42.5	15.1		722	10,500	6.783	4,897	1,575	67.0°	67.6°	0.0°	67.6°	72°				-		0%	-
45-49/42	47.5	17.0		512	10,500	6.783	3,473	1,575	66.0°	68.3°	0.0°	68.3°	72°				-		40%	-
50-54/47	52.5	19.7	25.8	659	10,500	6.783	4,470	1,575	61.0°	69.1°	0.0°	69.1°	72°	91,571	1,795	7.63	-		38%	
55-59/52	57.5	22.9	26.0	829	10,500	6.783	5,623	1,575	61.0°	69.8°	0.0°	69.8°	72°	100,076	2,697	8.34	-		41%	
60-64/56	62.5	25.7	26.2	1010	10,500	6.783	6,851	1,575	61.0°	70.6°	0.0°	70.6°	72°	108,581	3,867	9.05	-		45%	
65-69/60	67.5	28.7	26.4	812	10,500	6.783	5,508	1,575	61.0°	71.3°	0.0°	71.3°	72°	117,086	3,615	9.76			48%	
70-74/63	72.5	31.0	26.6	470	10,500	6.783	3,188	1,575	61.0°	72.1°	0.0°	72.1°	72°	125,591	2,408	10.47			52%	
75-79/66	77.5	32.4	26.8	436	10,500	6.783	2,957	1,575	61.0°	72.8°	0.0°	72.8°	72°	134,096	2,546	11.17			55%	
80-84/69	82.5	33.8	26.9	265	10,500	6.783	1,797	1,575	61.0°	73.6°	0.0°	73.6°	72°	142,601	1,750	11.88			59%	
85-89/72	87.5	36.5	27.1	106	10,500	6.783	719	1,575	61.0°	74.3°	0.0°	74.3°	72°	151,106	786	12.59			62%	
90-94/73	92.5	39.2	27.3	17	10,500	6.783	115	1,575	61.0°	75.1°	0.0°	75.1°	72°	159,611	141	13.30			65%	
				8,760.00			59,418								19,605	13.30				310

Title	**BAS Upgrades & Modifications**
ECM#	**7**
Project:	**SCI Houtzdale**
Site:	**SCI Houtzdale**

CONVERSION FACTORS				Design Conditions		
SLR	**76%**	Sensible	/latent	Supply CFM	2,500	
FANHP (F.L.)	**1.97**	HP@	2,500	Total Cooling	87,750	90,000
RAFHP (F.L.)	**0.15**	HP@	2,125	Sensible Cooling	66,420	
FMEFF	**88%**	Percent		Air Side TD	24.60	
CFMREF	**2,500**	CFM		Supply HP	3	
DREFF	**97%**	Percent	(@F.L.)	T.S.P.	3.0	
MINVOL	**1,000**	CFM	CFM	Supply Fan Eff	60%	
Conv. Fact.	6,344	60	0.24	Return CFM	2,125	
Off Coil Conditions	57	24.19	28	Return T.S.P.	1.5	
Btu/CCF	102,800	Heat EX Eff Wtr:		Return Fan HP	0.5	
kW/Ton	0.95	Heat EX Eff Smr:		Return Fan Eff	60%	

Existing Operation

Bin DB temp/ WetBulb	Average Temp	enthapy OA btu/lb	enthapy Mixed Air btu/lb	Bin hrs	SA air flow CFM	Fan kW	Fan kWh	OA air flow CFM	Discharge Air Temp	MAT Air Temp	Heat Pipe Air Temp DT °F	MAT Air Temp w/ Hpipe	Space Temp setpoint	Total Cooling BTU/Hr	Total Cooling kW/Hyear	Total Cooling Demand Tons	Total Heating BTU/Hr	Total Reheat BTU/Hr	Run Fraction	Existing Heating CCF/year
-15 -11 / -12.6	-12.5	0.0		0	2,500	1.814	-	375	75.0°	59.3°	0.0°	59.3°	72°				42,323		100%	-
-10 -6 /-7.1	-7.5	0.0		0	2,500	1.814	-	375	75.0°	60.1°	0.0°	60.1°	72°				40,298		100%	-
-5 -1 /-2.9	-2.5	0.0		0	2,500	1.814	-	375	75.0°	60.8°	0.0°	60.8°	72°				38,273		100%	-
0-4/1	2.5	0.0		2	2,500	1.814	4	375	75.0°	61.6°	0.0°	61.6°	72°				36,248		40%	0.36
5-9/6	7.5	2.9		5	2,500	1.814	9	375	75.0°	62.3°	0.0°	62.3°	72°				34,223		38%	0.81
10-14/11	12.5	4.2		77	2,500	1.814	140	375	75.0°	63.1°	0.0°	63.1°	72°				32,198		36%	11.06
15-19/15	17.5	5.7		270	2,500	1.814	490	375	75.0°	63.8°	0.0°	63.8°	72°				30,173		34%	34.06
20-24/20	22.5	7.3		452	2,500	1.814	820	375	75.0°	64.6°	0.0°	64.6°	72°				28,148		31%	49.62
25-29/25	27.5	9.0		411	2,500	1.814	745	375	75.0°	65.3°	0.0°	65.3°	72°				26,123		29%	38.86
30-34/30	32.5	11.1		897	2,500	1.814	1,627	375	75.0°	66.1°	0.0°	66.1°	72°				24,098		27%	72.18
35-39/34	37.5	12.8		808	2,500	1.814	1,465	375	75.0°	66.8°	0.0°	66.8°	72°				22,073		25%	54.55
40-44/38	42.5	15.1		722	2,500	1.814	1,309	375	75.0°	67.6°	0.0°	67.6°	72°				20,048		22%	40.21
45-49/42	47.5	17.0		512	2,500	1.814	929	375	75.0°	68.3°	0.0°	68.3°	72°				18,023		45%	51.79
50-54/47	52.5	19.7	25.8	659	2,500	1.814	1,195	375	56.7°	69.1°	0.0°	69.1°	72°	33,413	664	2.78	-		38%	
55-59/52	57.5	22.9	26.0	829	2,500	1.814	1,503	375	56.7°	69.8°	0.0°	69.8°	72°	35,438	939	2.95	-		40%	
60-64/56	62.5	25.7	26.2	1010	2,500	1.814	1,832	375	56.7°	70.6°	0.0°	70.6°	72°	37,463	1,279	3.12	-		43%	
65-69/60	67.5	28.7	26.4	812	2,500	1.814	1,473	375	56.7°	71.3°	0.0°	71.3°	72°	39,488	1,142	3.29			45%	
70-74/63	72.5	31.0	26.6	470	2,500	1.814	852	375	56.7°	72.1°	0.0°	72.1°	72°	41,513	731	3.46			47%	
75-79/66	77.5	32.4	26.8	436	2,500	1.814	791	375	56.7°	72.8°	0.0°	72.8°	72°	43,538	746	3.63			50%	
80-84/69	82.5	33.8	26.9	265	2,500	1.814	481	375	56.7°	73.6°	0.0°	73.6°	72°	45,563	496	3.80			52%	
85-89/72	87.5	36.5	27.1	106	2,500	1.814	192	375	56.7°	74.3°	0.0°	74.3°	72°	47,588	217	3.97			54%	
90-94/73	92.5	39.2	27.3	17	2,500	1.814	31	375	56.7°	75.1°	0.0°	75.1°	72°	49,613	38	4.13			57%	
				8,760.00			15,886								6,251	4.13				354

CONVERSION FACTORS				Design Conditions		
	76%	Sensible	/latent	Supply CFM	2,500	
FANHP (F.L.)	**1.97**	HP@	2,500	Total Cooling	87,750	90,000
RAFHP (F.L.)	**0.15**	HP@	2,125	Sensible Cooling	66,420	
FMEFF	**88%**	Percent		Air Side TD	24.60	
CFMREF	**2,500**	CFM		Supply HP	3.00	
DREFF	**97%**	Percent	(@F.L.)	T.S.P.	3.0	
MINVOL	**1,000**	CFM	CFM	Supply Fan Eff	60%	
Conv. Fact.	6,344	60	0.24	Return CFM	2,125	
Off Coil Conditions	57	24.19	28	Return T.S.P.	1.5	
Ht Pmp COP	102,800	Heat EX Eff Wtr:		Return Fan HP	0.5	
kW/Ton	0.95	Heat EX Eff Smr:		Return Fan Eff	60%	

Proposed Operation

Bin DB temp/ WetBulb	Average Temp	enthapy OA btu/lb	enthapy Mixed Air btu/lb	Bin hrs	SA air flow CFM	Fan kW	Fan kWh	OA air flow CFM	Discharge Air Temp	MAT Air Temp	Heat Pipe Air Temp DT °F	MAT Air Temp w/ Hpipe	Space Temp setpoint	Total Cooling BTU/Hr	Total Cooling kW/Hyear	Total Cooling Demand Tons	Total Heating BTU/Hr	Total Reheat BTU/Hr	Run Fraction	Proposed Heating CCF/year
-15 -11 / -12.6	-12.5	0.0		0	2,500	1.814	-	375	75.0°	59.3°	0.0°	59.3°	72°				42,323		100%	-
-10 -6 /-7.1	-7.5	0.0		0	2,500	1.814	-	375	75.0°	60.1°	0.0°	60.1°	72°				40,298		100%	-
-5 -1 /-2.9	-2.5	0.0		0	2,500	1.814	-	375	75.0°	60.8°	0.0°	60.8°	72°				38,273		100%	-
0-4/1	2.5	0.0		2	2,500	1.814	4	375	75.0°	61.6°	0.0°	61.6°	72°				36,248		40%	0.36
5-9/6	7.5	2.9		5	2,500	1.814	9	375	74.0°	62.3°	0.0°	62.3°	72°				31,523		35%	0.69
10-14/11	12.5	4.2		77	2,500	1.814	140	375	73.0°	63.1°	0.0°	63.1°	72°				26,798		30%	7.66
15-19/15	17.5	5.7		270	2,500	1.814	490	375	72.0°	63.8°	0.0°	63.8°	72°				22,073		25%	18.23
20-24/20	22.5	7.3		452	2,500	1.814	820	375	71.0°	64.6°	0.0°	64.6°	72°				17,348		19%	18.85
25-29/25	27.5	9.0		411	2,500	1.814	745	375	70.0°	65.3°	0.0°	65.3°	72°				12,623		14%	9.07
30-34/30	32.5	11.1		897	2,500	1.814	1,627	375	69.0°	66.1°	0.0°	66.1°	72°				7,897		9%	7.75
35-39/34	37.5	12.8		808	2,500	1.814	1,465	375	68.0°	66.8°	0.0°	66.8°	72°				3,172		4%	1.13
40-44/38	42.5	15.1		722	2,500	1.814	1,309	375	67.0°	67.6°	0.0°	67.6°	72°				-		0%	-
45-49/42	47.5	17.0		512	2,500	1.814	929	375	66.0°	68.3°	0.0°	68.3°	72°				-		45%	-
50-54/47	52.5	19.7	25.8	659	2,500	1.814	1,195	375	56.7°	69.1°	0.0°	69.1°	72°	33,413	664	2.78	-		38%	
55-59/52	57.5	22.9	26.0	829	2,500	1.814	1,503	375	56.7°	69.8°	0.0°	69.8°	72°	35,438	939	2.95	-		40%	
60-64/56	62.5	25.7	26.2	1010	2,500	1.814	1,832	375	56.7°	70.6°	0.0°	70.6°	72°	37,463	1,279	3.12	-		43%	
65-69/60	67.5	28.7	26.4	812	2,500	1.814	1,473	375	56.7°	71.3°	0.0°	71.3°	72°	39,488	1,142	3.29			45%	
70-74/63	72.5	31.0	26.6	470	2,500	1.814	852	375	56.7°	72.1°	0.0°	72.1°	72°	41,513	731	3.46			47%	
75-79/66	77.5	32.4	26.8	436	2,500	1.814	791	375	56.7°	72.8°	0.0°	72.8°	72°	43,538	746	3.63			50%	
80-84/69	82.5	33.8	26.9	265	2,500	1.814	481	375	56.7°	73.6°	0.0°	73.6°	72°	45,563	496	3.80			52%	
85-89/72	87.5	36.5	27.1	106	2,500	1.814	192	375	56.7°	74.3°	0.0°	74.3°	72°	47,588	217	3.97			54%	
90-94/73	92.5	39.2	27.3	17	2,500	1.814	31	375	56.7°	75.1°	0.0°	75.1°	72°	49,613	38	4.13			57%	
				8,760.00			15,886								6,251	4.13				64

Title	**BAS Upgrades & Modifications**
ECM#	**7**
Project:	**SCI Houtzdale**
Site:	**SCI Houtzdale**

CONVERSION FACTORS				Design Conditions		
SLR	**87%**	Sensible	/latent	Supply CFM	10,500	
FANHP (F.L.)	**8.28**	HP@	10,500	Total Cooling	260,250	294,000
RAFHP (F.L.)	-	HP@	8,925	Sensible Cooling	225,666	
FMEFF	**90%**	Percent		Air Side TD	19.90	
CFMREF	**10,500**	CFM		Supply HP	10	
DREFF	**97%**	Percent	(@F.L.)	T.S.P.	3.0	
MINVOL	**4,200**	CFM	CFM	Supply Fan Eff	60%	
Conv. Fact.	6,344	60	0.24	Return CFM	8,925	
Off Coil Conditions	61	26.07	28	Return T.S.P.	-	
Btu/CCF	102,800	Heat EX Eff Wtr:		Return Fan HP	-	
kW/Ton	0.95	Heat EX Eff Smr:		Return Fan Eff	65%	

Existing Operation

Bin DB temp/ WetBulb	Average Temp	enthapy OA btu/lb	enthapy Mixed Air btu/lb	Bin hrs	SA air flow CFM	Fan kW	Fan kWh	OA air flow CFM	Discharge Air Temp	MAT Air Temp	Heat Pipe Air Temp DT °F	MAT Air Temp w/ Hpipe	Space Temp setpoint	Total Cooling BTU/Hr	Total Cooling kWh/year	Total Cooling Demand Tons	Total Heating BTU/Hr	Total Reheat BTU/Hr	Run Fraction	Existing Heating CCF/year
-15 -11 / -12.6	-12.5	0.0		0	10,500	6.898	-	1,575	75.0°	59.3°	0.0°	59.3°	72°				177,755		100%	-
-10 -6 /-7.1	-7.5	0.0		0	10,500	6.898	-	1,575	75.0°	60.1°	0.0°	60.1°	72°				169,250		100%	-
-5 -1 /-2.9	-2.5	0.0		0	10,500	6.898	-	1,575	75.0°	60.8°	0.0°	60.8°	72°				160,745		100%	-
0-4/1	2.5	0.0		2	10,500	6.898	14	1,575	75.0°	61.6°	0.0°	61.6°	72°				152,240		52%	1.97
5-9/6	7.5	2.9		5	10,500	6.898	34	1,575	75.0°	62.3°	0.0°	62.3°	72°				143,735		49%	4.38
10-14/11	12.5	4.2		77	10,500	6.898	531	1,575	75.0°	63.1°	0.0°	63.1°	72°				135,230		46%	59.73
15-19/15	17.5	5.7		270	10,500	6.898	1,862	1,575	75.0°	63.8°	0.0°	63.8°	72°				126,725		43%	183.93
20-24/20	22.5	7.3		452	10,500	6.898	3,118	1,575	75.0°	64.6°	0.0°	64.6°	72°				118,220		40%	267.97
25-29/25	27.5	9.0		411	10,500	6.898	2,835	1,575	75.0°	65.3°	0.0°	65.3°	72°				109,715		37%	209.86
30-34/30	32.5	11.1		897	10,500	6.898	6,187	1,575	75.0°	66.1°	0.0°	66.1°	72°				101,210		34%	389.76
35-39/34	37.5	12.8		808	10,500	6.898	5,573	1,575	75.0°	66.8°	0.0°	66.8°	72°				92,705		32%	294.56
40-44/38	42.5	15.1		722	10,500	6.898	4,980	1,575	75.0°	67.6°	0.0°	67.6°	72°				84,200		29%	217.13
45-49/42	47.5	17.0		512	10,500	6.898	3,532	1,575	75.0°	68.3°	0.0°	68.3°	72°				75,695		50%	241.67
50-54/47	52.5	19.7	25.8	659	10,500	6.898	4,546	1,575	61.1°	69.1°	0.0°	69.1°	72°	90,437	1,640	7.54	-		35%	
55-59/52	57.5	22.9	26.0	829	10,500	6.898	5,718	1,575	61.1°	69.8°	0.0°	69.8°	72°	98,942	2,469	8.25	-		38%	
60-64/56	62.5	25.7	26.2	1010	10,500	6.898	6,967	1,575	61.1°	70.6°	0.0°	70.6°	72°	107,447	3,547	8.95	-		41%	
65-69/60	67.5	28.7	26.4	812	10,500	6.898	5,601	1,575	61.1°	71.3°	0.0°	71.3°	72°	115,952	3,321	9.66			45%	
70-74/63	72.5	31.0	26.6	470	10,500	6.898	3,242	1,575	61.1°	72.1°	0.0°	72.1°	72°	124,457	2,215	10.37			48%	
75-79/66	77.5	32.4	26.8	436	10,500	6.898	3,007	1,575	61.1°	72.8°	0.0°	72.8°	72°	132,962	2,345	11.08			51%	
80-84/69	82.5	33.8	26.9	265	10,500	6.898	1,828	1,575	61.1°	73.6°	0.0°	73.6°	72°	141,467	1,613	11.79			54%	
85-89/72	87.5	36.5	27.1	106	10,500	6.898	731	1,575	61.1°	74.3°	0.0°	74.3°	72°	149,972	725	12.50			58%	
90-94/73	92.5	39.2	27.3	17	10,500	6.898	117	1,575	61.1°	75.1°	0.0°	75.1°	72°	158,477	130	13.21			61%	
				8,760.00			60,425								18,004	13.21				1,871

CONVERSION FACTORS				Design Conditions		
	87%	Sensible	/latent	Supply CFM	10,500	
FANHP (F.L.)	**8.28**	HP@	10,500	Total Cooling	260,250	294,000
RAFHP (F.L.)	-	HP@	8,925	Sensible Cooling	225,666	
FMEFF	**90%**	Percent		Air Side TD	19.90	
CFMREF	**10,500**	CFM		Supply HP	10.00	
DREFF	**97%**	Percent	(@F.L.)	T.S.P.	3.0	
MINVOL	**4,200**	CFM	CFM	Supply Fan Eff	60%	
Conv. Fact.	6,344	60	0.24	Return CFM	8,925	
Off Coil Conditions	61	26.07	28	Return T.S.P.	-	
Btu/CCF	102,800	Heat EX Eff Wtr:		Return Fan HP	-	
kW/Ton	0.95	Heat EX Eff Smr:		Return Fan Eff	65%	

Proposed Operation

Bin DB temp/ WetBulb	Average Temp	enthapy OA btu/lb	enthapy Mixed Air btu/lb	Bin hrs	SA air flow CFM	Fan kW	Fan kWh	OA air flow CFM	Discharge Air Temp	MAT Air Temp	Heat Pipe Air Temp DT °F	MAT Air Temp w/ Hpipe	Space Temp setpoint	Total Cooling BTU/Hr	Total Cooling kWh/year	Total Cooling Demand Tons	Total Heating BTU/Hr	Total Reheat BTU/Hr	Run Fraction	Proposed Heating CCF/year
-15 -11 / -12.6	-12.5	0.0		0	10,500	6.898	-	1,575	75.0°	59.3°	0.0°	59.3°	72°				177,755		100%	-
-10 -6 /-7.1	-7.5	0.0		0	10,500	6.898	-	1,575	75.0°	60.1°	0.0°	60.1°	72°				169,250		100%	-
-5 -1 /-2.9	-2.5	0.0		0	10,500	6.898	-	1,575	75.0°	60.8°	0.0°	60.8°	72°				160,745		100%	-
0-4/1	2.5	0.0		2	10,500	6.898	14	1,575	75.0°	61.6°	0.0°	61.6°	72°				152,240		52%	1.97
5-9/6	7.5	2.9		5	10,500	6.898	34	1,575	74.0°	62.3°	0.0°	62.3°	72°				132,395		45%	3.72
10-14/11	12.5	4.2		77	10,500	6.898	531	1,575	73.0°	63.1°	0.0°	63.1°	72°				112,550		38%	41.38
15-19/15	17.5	5.7		270	10,500	6.898	1,862	1,575	72.0°	63.8°	0.0°	63.8°	72°				92,705		32%	98.43
20-24/20	22.5	7.3		452	10,500	6.898	3,118	1,575	71.0°	64.6°	0.0°	64.6°	72°				72,860		25%	101.78
25-29/25	27.5	9.0		411	10,500	6.898	2,835	1,575	70.0°	65.3°	0.0°	65.3°	72°				53,015		18%	49.00
30-34/30	32.5	11.1		897	10,500	6.898	6,187	1,575	69.0°	66.1°	0.0°	66.1°	72°				33,170		11%	41.86
35-39/34	37.5	12.8		808	10,500	6.898	5,573	1,575	68.0°	66.8°	0.0°	66.8°	72°				13,325		5%	6.09
40-44/38	42.5	15.1		722	10,500	6.898	4,980	1,575	67.0°	67.6°	0.0°	67.6°	72°				-		0%	-
45-49/42	47.5	17.0		512	10,500	6.898	3,532	1,575	66.0°	68.3°	0.0°	68.3°	72°				-		50%	-
50-54/47	52.5	19.7	25.8	659	10,500	6.898	4,546	1,575	61.1°	69.1°	0.0°	69.1°	72°	90,437	1,640	7.54	-		35%	
55-59/52	57.5	22.9	26.0	829	10,500	6.898	5,718	1,575	61.1°	69.8°	0.0°	69.8°	72°	98,942	2,469	8.25	-		38%	
60-64/56	62.5	25.7	26.2	1010	10,500	6.898	6,967	1,575	61.1°	70.6°	0.0°	70.6°	72°	107,447	3,547	8.95	-		41%	
65-69/60	67.5	28.7	26.4	812	10,500	6.898	5,601	1,575	61.1°	71.3°	0.0°	71.3°	72°	115,952	3,321	9.66			45%	
70-74/63	72.5	31.0	26.6	470	10,500	6.898	3,242	1,575	61.1°	72.1°	0.0°	72.1°	72°	124,457	2,215	10.37			48%	
75-79/66	77.5	32.4	26.8	436	10,500	6.898	3,007	1,575	61.1°	72.8°	0.0°	72.8°	72°	132,962	2,345	11.08			51%	
80-84/69	82.5	33.8	26.9	265	10,500	6.898	1,828	1,575	61.1°	73.6°	0.0°	73.6°	72°	141,467	1,613	11.79			54%	
85-89/72	87.5	36.5	27.1	106	10,500	6.898	731	1,575	61.1°	74.3°	0.0°	74.3°	72°	149,972	725	12.50			58%	
90-94/73	92.5	39.2	27.3	17	10,500	6.898	117	1,575	61.1°	75.1°	0.0°	75.1°	72°	158,477	130	13.21			61%	
				8,760.00			60,425								18,004	13.21				344

Title	**BAS Upgrades & Modifications**
ECM#	**7**
Project:	**SCI Houtzdale**
Site:	**SCI Houtzdale**

CONVERSION FACTORS				Design Conditions		
SLR	**93%**	Sensible	/latent	Supply CFM	10,500	
FANHP (F.L.)	**8.28**	HP@	10,500	Total Cooling	243,750	300,000
RAFHP (F.L.)	-	HP@	8,925	Sensible Cooling	226,800	
FMEFF	**90%**	Percent		Air Side TD	20.00	
CFMREF	**10,500**	CFM		Supply HP	10	
DREFF	**97%**	Percent	(@F.L.)	T.S.P.	3.0	
MINVOL	**4,200**	CFM	CFM	Supply Fan Eff	60%	
Conv. Fact.	6,344	60	0.24	Return CFM	8,925	
Off Coil Conditions	61	26.34	28	Return T.S.P.	-	
Btu/CCF	102,800	Heat Pipe Eff	-	Return Fan HP	-	
kW/Ton	0.95			Return Fan Eff	70%	

Existing Operation

Bin DB temp/ WetBulb	Average Temp	enthapy OA btu/lb	enthapy Mixed Air btu/lb	Bin hrs	SA air flow CFM	Fan kW	Fan kWh	OA air flow CFM	Discharge Air Temp	MAT Air Temp	Heat Pipe Air Temp DT °F	MAT Air Temp w/ Hpipe	Space Temp setpoint	Total Cooling BTU/Hr	Total Cooling kW/Hyear	Total Cooling Demand Tons	Total Heating BTU/Hr	Total Reheat BTU/Hr	Run Fraction	Existing Heating CCF/year
-15 -11 / -12.6	-12.5	0.0		0	10,500	6.898	-	1,575	75.0°	59.3°	0.0°	59.3°	72°				177,755		100%	-
-10 -6 /-7.1	-7.5	0.0		0	10,500	6.898	-	1,575	75.0°	60.1°	0.0°	60.1°	72°				169,250		100%	-
-5 -1 /-2.9	-2.5	0.0		0	10,500	6.898	-	1,575	75.0°	60.8°	0.0°	60.8°	72°				160,745		100%	-
0-4/1	2.5	0.0		2	10,500	6.898	14	1,575	75.0°	61.6°	0.0°	61.6°	72°				152,240		51%	1.93
5-9/6	7.5	2.9		5	10,500	6.898	34	1,575	75.0°	62.3°	0.0°	62.3°	72°				143,735		48%	4.29
10-14/11	12.5	4.2		77	10,500	6.898	531	1,575	75.0°	63.1°	0.0°	63.1°	72°				135,230		45%	58.54
15-19/15	17.5	5.7		270	10,500	6.898	1,862	1,575	75.0°	63.8°	0.0°	63.8°	72°				126,725		42%	180.25
20-24/20	22.5	7.3		452	10,500	6.898	3,118	1,575	75.0°	64.6°	0.0°	64.6°	72°				118,220		39%	262.61
25-29/25	27.5	9.0		411	10,500	6.898	2,835	1,575	75.0°	65.3°	0.0°	65.3°	72°				109,715		37%	205.67
30-34/30	32.5	11.1		897	10,500	6.898	6,187	1,575	75.0°	66.1°	0.0°	66.1°	72°				101,210		34%	381.97
35-39/34	37.5	12.8		808	10,500	6.898	5,573	1,575	75.0°	66.8°	0.0°	66.8°	72°				92,705		31%	288.67
40-44/38	42.5	15.1		722	10,500	6.898	4,980	1,575	75.0°	67.6°	0.0°	67.6°	72°				84,200		28%	212.79
45-49/42	47.5	17.0		512	10,500	6.898	3,532	1,575	75.0°	68.3°	0.0°	68.3°	72°				75,695		50%	241.67
50-54/47	52.5	19.7	25.8	659	10,500	6.898	4,546	1,575	61.0°	69.1°	0.0°	69.1°	72°	91,571	1,795	7.63	-		38%	-
55-59/52	57.5	22.9	26.0	829	10,500	6.898	5,718	1,575	61.0°	69.8°	0.0°	69.8°	72°	100,076	2,697	8.34	-		41%	-
60-64/56	62.5	25.7	26.2	1010	10,500	6.898	6,967	1,575	61.0°	70.6°	0.0°	70.6°	72°	108,581	3,867	9.05	-		45%	-
65-69/60	67.5	28.7	26.4	812	10,500	6.898	5,601	1,575	61.0°	71.3°	0.0°	71.3°	72°	117,086	3,615	9.76			48%	-
70-74/63	72.5	31.0	26.6	470	10,500	6.898	3,242	1,575	61.0°	72.1°	0.0°	72.1°	72°	125,591	2,408	10.47			52%	-
75-79/66	77.5	32.4	26.8	436	10,500	6.898	3,007	1,575	61.0°	72.8°	0.0°	72.8°	72°	134,096	2,546	11.17			55%	-
80-84/69	82.5	33.8	26.9	265	10,500	6.898	1,828	1,575	61.0°	73.6°	0.0°	73.6°	72°	142,601	1,750	11.88			59%	-
85-89/72	87.5	36.5	27.1	106	10,500	6.898	731	1,575	61.0°	74.3°	0.0°	74.3°	72°	151,106	786	12.59			62%	-
90-94/73	92.5	39.2	27.3	17	10,500	6.898	117	1,575	61.0°	75.1°	0.0°	75.1°	72°	159,611	141	13.30			65%	
				8,760.00			60,425								19,605	13.30				1,838

CONVERSION FACTORS				Design Conditions		
	93%	Sensible	/latent	Supply CFM	10,500	
FANHP (F.L.)	**8.28**	HP@	10,500	Total Cooling	243,750	300,000
RAFHP (F.L.)	-	HP@	8,925	Sensible Cooling	226,800	
FMEFF	**90%**	Percent		Air Side TD	20.00	
CFMREF	**10,500**	CFM		Supply HP	10.00	
DREFF	**40%**	Percent	(@F.L.)	T.S.P.	3.0	
MINVOL	**4,200**	CFM	CFM	Supply Fan Eff	60%	
Conv. Fact.	6,344	60	0.24	Return CFM	8,925	
Off Coil Conditions	61	26.34	28	Return T.S.P.	-	
Gas (BTU/CCF):	102,800	Heat Pipe Eff	-	Return Fan HP	-	
kW/ton=	0.95			Return Fan Eff	60%	

Proposed Operation

Bin DB temp/ WetBulb	Average Temp	enthapy OA btu/lb	enthapy Mixed Air btu/lb	Bin hrs	SA air flow CFM	Fan kW	Fan kWh	OA air flow CFM	Discharge Air Temp	MAT Air Temp	Heat Pipe Air Temp DT °F	MAT Air Temp w/ Hpipe	Space Temp setpoint	Total Cooling BTU/Hr	Total Cooling kW/Hyear	Total Cooling Demand Tons	Total Heating BTU/Hr	Total Reheat BTU/Hr	Run Fraction	Proposed Heating CCF/year
-15 -11 / -12.6	-12.5	0.0		0	10,500	6.898	-	1,575	75.0°	59.3°	0.0°	59.3°	72°				177,755		100%	-
-10 -6 /-7.1	-7.5	0.0		0	10,500	6.898	-	1,575	75.0°	60.1°	0.0°	60.1°	72°				169,250		100%	-
-5 -1 /-2.9	-2.5	0.0		0	10,500	6.898	-	1,575	75.0°	60.8°	0.0°	60.8°	72°				160,745		100%	-
0-4/1	2.5	0.0		2	10,500	6.898	14	1,575	75.0°	61.6°	0.0°	61.6°	72°				152,240		51%	1.93
5-9/6	7.5	2.9		5	10,500	6.898	34	1,575	74.0°	62.3°	0.0°	62.3°	72°				132,395		44%	3.64
10-14/11	12.5	4.2		77	10,500	6.898	531	1,575	73.0°	63.1°	0.0°	63.1°	72°				112,550		38%	40.55
15-19/15	17.5	5.7		270	10,500	6.898	1,862	1,575	72.0°	63.8°	0.0°	63.8°	72°				92,705		31%	96.46
20-24/20	22.5	7.3		452	10,500	6.898	3,118	1,575	71.0°	64.6°	0.0°	64.6°	72°				72,860		24%	99.75
25-29/25	27.5	9.0		411	10,500	6.898	2,835	1,575	70.0°	65.3°	0.0°	65.3°	72°				53,015		18%	48.02
30-34/30	32.5	11.1		897	10,500	6.898	6,187	1,575	69.0°	66.1°	0.0°	66.1°	72°				33,170		11%	41.03
35-39/34	37.5	12.8		808	10,500	6.898	5,573	1,575	68.0°	66.8°	0.0°	66.8°	72°				13,325		4%	5.96
40-44/38	42.5	15.1		722	10,500	6.898	4,980	1,575	67.0°	67.6°	0.0°	67.6°	72°				-		0%	-
45-49/42	47.5	17.0		512	10,500	6.898	3,532	1,575	66.0°	68.3°	0.0°	68.3°	72°				-		50%	-
50-54/47	52.5	19.7	25.8	659	10,500	6.898	4,546	1,575	61.0°	69.1°	0.0°	69.1°	72°	91,571	1,795	7.63			38%	-
55-59/52	57.5	22.9	26.0	829	10,500	6.898	5,718	1,575	61.0°	69.8°	0.0°	69.8°	72°	100,076	2,697	8.34			41%	-
60-64/56	62.5	25.7	26.2	1010	10,500	6.898	6,967	1,575	61.0°	70.6°	0.0°	70.6°	72°	108,581	3,867	9.05			45%	-
65-69/60	67.5	28.7	26.4	812	10,500	6.898	5,601	1,575	61.0°	71.3°	0.0°	71.3°	72°	117,086	3,615	9.76			48%	-
70-74/63	72.5	31.0	26.6	470	10,500	6.898	3,242	1,575	61.0°	72.1°	0.0°	72.1°	72°	125,591	2,408	10.47			52%	-
75-79/66	77.5	32.4	26.8	436	10,500	6.898	3,007	1,575	61.0°	72.8°	0.0°	72.8°	72°	134,096	2,546	11.17			55%	-
80-84/69	82.5	33.8	26.9	265	10,500	6.898	1,828	1,575	61.0°	73.6°	0.0°	73.6°	72°	142,601	1,750	11.88			59%	-
85-89/72	87.5	36.5	27.1	106	10,500	6.898	731	1,575	61.0°	74.3°	0.0°	74.3°	72°	151,106	786	12.59			62%	-
90-94/73	92.5	39.2	27.3	17	10,500	6.898	117	1,575	61.0°	75.1°	0.0°	75.1°	72°	159,611	141	13.30			65%	
				8760			60,425								19,605	13.30				337

Title	**BAS Upgrades & Modifications**
ECM#	**7**
Project:	**SCI Houtzdale**
Site:	**SCI Houtzdale**

CONVERSION FACTORS				Design Conditions		
SLR	**57%**	Sensible	/latent	Supply CFM	2,190	
FANHP (F.L.)	**1.73**	HP@	2,190	Total Cooling	112,500	50,000
RAFHP (F.L.)	**0.73**	HP@	1,862	Sensible Cooling	64,097	
FMEFF	**88%**	Percent		Air Side TD	27.10	
CFMREF	**2,190**	CFM		Supply HP	3	
DREFF	**97%**	Percent	(@F.L.)	T.S.P.	3.0	
MINVOL	**876**	CFM	CFM	Supply Fan Eff	60%	
Conv. Fact.	6,344	60	0.24	Return CFM	1,862	
Off Coil Conditions	53	22.16	28	Return T.S.P.	1.5	
Btu/CCF	102,800	Heat Pipe Eff.	-	Return Fan HP	0.8	
kW/Ton	0.95			Return Fan Eff	60%	

Existing Operation

Bin DB temp/ WetBulb	Average Temp	enthapy OA btu/lb	enthapy Mixed Air btu/lb	Bin hrs	SA air flow CFM	Fan kW	Fan kWh	OA air flow CFM	Discharge Air Temp	MAT Air Temp	Heat Pipe Air Temp DT °F	MAT Air Temp w/ Hpipe	Space Temp setpoint	Total Cooling BTU/Hr	Total Cooling kW/Hyear	Total Cooling Demand Tons	Total Heating BTU/Hr	Total Reheat BTU/Hr	Run Fraction	Existing Heating CCF/year
-15 -11 / -12.6	-12.5	0.0		0	2,190	2.135	-	329	75.0°	59.3°	0.0°	59.3°	72°				37,075		100%	-
-10 -6 /-7.1	-7.5	0.0		0	2,190	2.135	-	329	75.0°	60.1°			72°				50,000		100%	-
-5 -1 /-2.9	-2.5	0.0		0	2,190	2.135	-	329	75.0°	60.8°			72°				50,000		100%	-
0-4/1	2.5	0.0		2	2,190	2.135	4	329	75.0°	61.6°	0.0°	61.6°	72°				31,753		64%	0.50
5-9/6	7.5	2.9		5	2,190	2.135	11	329	75.0°	62.3°	0.0°	62.3°	72°				29,979		60%	1.12
10-14/11	12.5	4.2		77	2,190	2.135	164	329	75.0°	63.1°	0.0°	63.1°	72°				28,205		56%	15.28
15-19/15	17.5	5.7		270	2,190	2.135	576	329	75.0°	63.8°	0.0°	63.8°	72°				26,431		53%	47.05
20-24/20	22.5	7.3		452	2,190	2.135	965	329	75.0°	64.6°	0.0°	64.6°	72°				24,657		49%	68.54
25-29/25	27.5	9.0		411	2,190	2.135	877	329	75.0°	65.3°	0.0°	65.3°	72°				22,883		46%	53.68
30-34/30	32.5	11.1		897	2,190	2.135	1,915	329	75.0°	66.1°	0.0°	66.1°	72°				21,109		42%	99.70
35-39/34	37.5	12.8		808	2,190	2.135	1,725	329	75.0°	66.8°	0.0°	66.8°	72°				19,336		39%	75.35
40-44/38	42.5	15.1		722	2,190	2.135	1,541	329	75.0°	67.6°	0.0°	67.6°	72°				17,562		35%	55.54
45-49/42	47.5	17.0		512	2,190	2.135	1,093	329	75.0°	68.3°	0.0°	68.3°	72°				15,788		50%	50.40
50-54/47	52.5	19.7	25.8	659	2,190	2.135	1,407	329	53.4°	69.1°	0.0°	69.1°	72°	37,075	637	3.09	-		33%	-
55-59/52	57.5	22.9	26.0	829	2,190	2.135	1,770	329	53.4°	69.8°	0.0°	69.8°	72°	38,848	880	3.24	-		35%	-
60-64/56	62.5	25.7	26.2	1010	2,190	2.135	2,156	329	53.4°	70.6°	0.0°	70.6°	72°	40,622	1,173	3.39	-		36%	-
65-69/60	67.5	28.7	26.4	812	2,190	2.135	1,734	329	53.4°	71.3°	0.0°	71.3°	72°	42,396	1,027	3.53			38%	-
70-74/63	72.5	31.0	26.6	470	2,190	2.135	1,003	329	53.4°	72.1°	0.0°	72.1°	72°	44,170	645	3.68			39%	-
75-79/66	77.5	32.4	26.8	436	2,190	2.135	931	329	53.4°	72.8°	0.0°	72.8°	72°	45,944	648	3.83			41%	-
80-84/69	82.5	33.8	26.9	265	2,190	2.135	566	329	53.4°	73.6°	0.0°	73.6°	72°	47,718	425	3.98			42%	-
85-89/72	87.5	36.5	27.1	106	2,190	2.135	226	329	53.4°	74.3°	0.0°	74.3°	72°	49,492	183	4.12			44%	-
90-94/73	92.5	39.2	27.3	17	2,190	2.135	36	329	53.4°	75.1°	0.0°	75.1°	72°	51,266	31	4.27			46%	
				8,760.00			18,702								5,649	4.27				467

CONVERSION FACTORS				Design Conditions		
	57%	Sensible	/latent	Supply CFM	2,190	
FANHP (F.L.)	**1.73**	HP@	2,190	Total Cooling	112,500	50,000
RAFHP (F.L.)	**0.73**	HP@	1,862	Sensible Cooling	64,097	
FMEFF	**88%**	Percent		Air Side TD	27.10	
CFMREF	**2,190**	CFM		Supply HP	3.00	
DREFF	**40%**	Percent	(@F.L.)	T.S.P.	3.0	
MINVOL	**876**	CFM	CFM	Supply Fan Eff	60%	
Conv. Fact.	6,344	60	0.24	Return CFM	1,862	
Off Coil Conditions	53	22.16	28	Return T.S.P.	1.5	
Gas (BTU/CCF):	102,800	Heat Pipe Eff.	-	Return Fan HP	0.8	
kW/ton=	0.95			Return Fan Eff	60%	

Proposed Operation

Bin DB temp/ WetBulb	Average Temp	enthapy OA btu/lb	enthapy Mixed Air btu/lb	Bin hrs	SA air flow CFM	Fan kW	Fan kWh	OA air flow CFM	Discharge Air Temp	MAT Air Temp	Heat Pipe Air Temp DT °F	MAT Air Temp w/ Hpipe	Space Temp setpoint	Total Cooling BTU/Hr	Total Cooling kW/Hyear	Total Cooling Demand Tons	Total Heating BTU/Hr	Total Reheat BTU/Hr	Run Fraction	Proposed Heating CCF/year
-15 -11 / -12.6	-12.5	0.0		0	2,190	2.135	-	329	75.0°	59.3°	0.0°	59.3°	72°				37,075		100%	-
-10 -6 /-7.1	-7.5	0.0		0	2,190	2.135	-	329	75.0°	60.1°	0.0°	60.1°	72°				35,301		100%	-
-5 -1 /-2.9	-2.5	0.0		0	2,190	2.135	-	329	75.0°	60.8°	0.0°	60.8°	72°				33,527		100%	-
0-4/1	2.5	0.0		2	2,190	2.135	4	329	75.0°	61.6°	0.0°	61.6°	72°				31,753		64%	0.50
5-9/6	7.5	2.9		5	2,190	2.135	11	329	74.0°	62.3°	0.0°	62.3°	72°				27,614		60%	1.03
10-14/11	12.5	4.2		77	2,190	2.135	164	329	73.0°	63.1°	0.0°	63.1°	72°				23,475		56%	12.72
15-19/15	17.5	5.7		270	2,190	2.135	576	329	72.0°	63.8°	0.0°	63.8°	72°				19,336		53%	34.42
20-24/20	22.5	7.3		452	2,190	2.135	965	329	71.0°	64.6°	0.0°	64.6°	72°				15,196		49%	42.24
25-29/25	27.5	9.0		411	2,190	2.135	877	329	70.0°	65.3°	0.0°	65.3°	72°				11,057		46%	25.94
30-34/30	32.5	11.1		897	2,190	2.135	1,915	329	69.0°	66.1°	0.0°	66.1°	72°				6,918		42%	32.67
35-39/34	37.5	12.8		808	2,190	2.135	1,725	329	68.0°	66.8°	0.0°	66.8°	72°				2,779		39%	10.83
40-44/38	42.5	15.1		722	2,190	2.135	1,541	329	67.0°	67.6°	0.0°	67.6°	72°				-		35%	-
45-49/42	47.5	17.0		512	2,190	2.135	1,093	329	66.0°	68.3°	0.0°	68.3°	72°				-		50%	-
50-54/47	52.5	19.7	25.8	659	2,190	2.135	1,407	329	53.4°	69.1°	0.0°	69.1°	72°	37,075	637	3.09			33%	-
55-59/52	57.5	22.9	26.0	829	2,190	2.135	1,770	329	53.4°	69.8°	0.0°	69.8°	72°	38,848	880	3.24			35%	-
60-64/56	62.5	25.7	26.2	1010	2,190	2.135	2,156	329	53.4°	70.6°	0.0°	70.6°	72°	40,622	1,173	3.39			36%	-
65-69/60	67.5	28.7	26.4	812	2,190	2.135	1,734	329	53.4°	71.3°	0.0°	71.3°	72°	42,396	1,027	3.53			38%	-
70-74/63	72.5	31.0	26.6	470	2,190	2.135	1,003	329	53.4°	72.1°	0.0°	72.1°	72°	44,170	645	3.68			39%	-
75-79/66	77.5	32.4	26.8	436	2,190	2.135	931	329	53.4°	72.8°	0.0°	72.8°	72°	45,944	648	3.83			41%	-
80-84/69	82.5	33.8	26.9	265	2,190	2.135	566	329	53.4°	73.6°	0.0°	73.6°	72°	47,718	425	3.98			42%	-
85-89/72	87.5	36.5	27.1	106	2,190	2.135	226	329	53.4°	74.3°	0.0°	74.3°	72°	49,492	183	4.12			44%	-
90-94/73	92.5	39.2	27.3	17	2,190	2.135	36	329	53.4°	75.1°	0.0°	75.1°	72°	51,266	31	4.27			46%	
				8,760.00			18,702								5,649	4.27				160

Title	**BAS Upgrades & Modifications**
ECM#	**7**
Project:	**SCI Houtzdale**
Site:	**SCI Houtzdale**

CONVERSION FACTORS				Design Conditions		
SLR	**96%**	Sensible	/latent	Supply CFM	8,000	
FANHP (F.L.)	**6.31**	HP@	8,000	Total Cooling	171,750	96,000
RAFHP (F.L.)	-	HP@	6,800	Sensible Cooling	164,160	
FMEFF	**90%**	Percent		Air Side TD	19.00	
CFMREF	**8,000**	CFM		Supply HP	8	
DREFF	**97%**	Percent	(@F.L.)	T.S.P.	3.0	
MINVOL	**3,200**	CFM	CFM	Supply Fan Eff	60%	
Conv. Fact.	6,344	60	0.24	Return CFM	6,800	
Off Coil Conditions	60	25.94	28	Return T.S.P.	-	
Btu/CCF	102,800	Heat Pipe Eff	-	Return Fan HP	-	
kW/Ton	0.95			Return Fan Eff	60%	

Existing Operation

Bin DB temp/ WetBulb	Average Temp	enthapy OA btu/lb	enthapy Mixed Air btu/lb	Bin hrs	SA air flow CFM	Fan kW	Fan kWh	OA air flow CFM	Discharge Air Temp	MAT Air Temp	Heat Pipe Air Temp DT °F	MAT Air Temp w/ Hpipe	Space Temp setpoint	Total Cooling BTU/Hr	Total Cooling kW/Hyear	Total Cooling Demand Tons	Total Heating BTU/Hr	Total Reheat BTU/Hr	Run Fraction	Existing Heating CCF/year
-15 -11 / -12.6	-12.5	0.0		0	8,000	5.255	-	1,200	75.0°	59.3°	0.0°	59.3°	72°				96,000		100%	-
-10 -6 /-7.1	-7.5	0.0		0	8,000	5.255	-	1,200	75.0°	60.1°	0.0°	60.1°	72°				96,000		100%	-
-5 -1 /-2.9	-2.5	0.0		0	8,000	5.255	-	1,200	75.0°	60.8°	0.0°	60.8°	72°				96,000		100%	-
0-4/1	2.5	0.0		2	8,000	5.255	11	1,200	75.0°	61.6°	0.0°	61.6°	72°				96,000		100%	2.39
5-9/6	7.5	2.9		5	8,000	5.255	26	1,200	75.0°	62.3°	0.0°	62.3°	72°				96,000		100%	5.99
10-14/11	12.5	4.2		77	8,000	5.255	405	1,200	75.0°	63.1°	0.0°	63.1°	72°				96,000		100%	92.19
15-19/15	17.5	5.7		270	8,000	5.255	1,419	1,200	75.0°	63.8°	0.0°	63.8°	72°				96,000		100%	323.26
20-24/20	22.5	7.3		452	8,000	5.255	2,375	1,200	75.0°	64.6°	0.0°	64.6°	72°				90,072		94%	476.39
25-29/25	27.5	9.0		411	8,000	5.255	2,160	1,200	75.0°	65.3°	0.0°	65.3°	72°				83,592		87%	373.09
30-34/30	32.5	11.1		897	8,000	5.255	4,714	1,200	75.0°	66.1°	0.0°	66.1°	72°				77,112		80%	692.91
35-39/34	37.5	12.8		808	8,000	5.255	4,246	1,200	75.0°	66.8°	0.0°	66.8°	72°				70,632		74%	523.67
40-44/38	42.5	15.1		722	8,000	5.255	3,794	1,200	75.0°	67.6°	0.0°	67.6°	72°				64,152		67%	386.01
45-49/42	47.5	17.0		512	8,000	5.255	2,691	1,200	75.0°	68.3°	0.0°	68.3°	72°				57,672		50%	184.13
50-54/47	52.5	19.7	25.8	659	8,000	5.255	3,463	1,200	60.3°	69.1°	0.0°	69.1°	72°	75,816	1,746	6.32	-		44%	-
55-59/52	57.5	22.9	26.0	829	8,000	5.255	4,357	1,200	60.3°	69.8°	0.0°	69.8°	72°	82,296	2,588	6.86	-		48%	-
60-64/56	62.5	25.7	26.2	1010	8,000	5.255	5,308	1,200	60.3°	70.6°	0.0°	70.6°	72°	88,776	3,669	7.40	-		52%	-
65-69/60	67.5	28.7	26.4	812	8,000	5.255	4,267	1,200	60.3°	71.3°	0.0°	71.3°	72°	95,256	3,396	7.94			55%	-
70-74/63	72.5	31.0	26.6	470	8,000	5.255	2,470	1,200	60.3°	72.1°	0.0°	72.1°	72°	101,736	2,242	8.48			59%	-
75-79/66	77.5	32.4	26.8	436	8,000	5.255	2,291	1,200	60.3°	72.8°	0.0°	72.8°	72°	108,216	2,354	9.02			63%	-
80-84/69	82.5	33.8	26.9	265	8,000	5.255	1,393	1,200	60.3°	73.6°	0.0°	73.6°	72°	114,696	1,607	9.56			67%	-
85-89/72	87.5	36.5	27.1	106	8,000	5.255	557	1,200	60.3°	74.3°	0.0°	74.3°	72°	121,176	717	10.10			71%	-
90-94/73	92.5	39.2	27.3	17	8,000	5.255	89	1,200	60.3°	75.1°	0.0°	75.1°	72°	127,656	128	10.64			74%	
				8,760.00			46,038								18,447	10.64				3,060

CONVERSION FACTORS				Design Conditions		
	96%	Sensible	/latent	Supply CFM	8,000	
FANHP (F.L.)	**6.31**	HP@	8,000	Total Cooling	171,750	96,000
RAFHP (F.L.)	-	HP@	6,800	Sensible Cooling	164,160	
FMEFF	**90%**	Percent		Air Side TD	19.00	
CFMREF	**8,000**	CFM		Supply HP	7.50	
DREFF	**97%**	Percent	(@F.L.)	T.S.P.	3.0	
MINVOL	**3,200**	CFM	CFM	Supply Fan Eff	60%	
Conv. Fact.	6,344	60	0.24	Return CFM	6,800	
Off Coil Conditions	60	25.94	28	Return T.S.P.	-	
Gas (BTU/CCF):	102,800	Heat Pipe Eff	-	Return Fan HP	-	
kW/ton=	0.95			Return Fan Eff	60%	

Proposed Operation

Bin DB temp/ WetBulb	Average Temp	enthapy OA btu/lb	enthapy Mixed Air btu/lb	Bin hrs	SA air flow CFM	Fan kW	Fan kWh	OA air flow CFM	Discharge Air Temp	MAT Air Temp	Heat Pipe Air Temp DT °F	MAT Air Temp w/ Hpipe	Space Temp setpoint	Total Cooling BTU/Hr	Total Cooling kW/Hyear	Total Cooling Demand Tons	Total Heating BTU/Hr	Total Reheat BTU/Hr	Run Fraction	Proposed Heating CCF/year
-15 -11 / -12.6	-12.5	0.0		0	8,000	5.255	-	1,200	75.0°	59.3°	0.0°	59.3°	72°				96,000		100%	-
-10 -6 /-7.1	-7.5	0.0		0	8,000	5.255	-	1,200	75.0°	60.1°	0.0°	60.1°	72°				96,000		100%	-
-5 -1 /-2.9	-2.5	0.0		0	8,000	5.255	-	1,200	75.0°	60.8°	0.0°	60.8°	72°				96,000		100%	-
0-4/1	2.5	0.0		2	8,000	5.255	11	1,200	75.0°	61.6°	0.0°	61.6°	72°				96,000		100%	2.39
5-9/6	7.5	2.9		5	8,000	5.255	26	1,200	74.0°	62.3°	0.0°	62.3°	72°				96,000		100%	5.99
10-14/11	12.5	4.2		77	8,000	5.255	405	1,200	73.0°	63.1°	0.0°	63.1°	72°				85,752		100%	82.35
15-19/15	17.5	5.7		270	8,000	5.255	1,419	1,200	72.0°	63.8°	0.0°	63.8°	72°				70,632		100%	237.84
20-24/20	22.5	7.3		452	8,000	5.255	2,375	1,200	71.0°	64.6°	0.0°	64.6°	72°				55,512		94%	293.60
25-29/25	27.5	9.0		411	8,000	5.255	2,160	1,200	70.0°	65.3°	0.0°	65.3°	72°				40,392		87%	180.28
30-34/30	32.5	11.1		897	8,000	5.255	4,714	1,200	69.0°	66.1°	0.0°	66.1°	72°				25,272		80%	227.09
35-39/34	37.5	12.8		808	8,000	5.255	4,246	1,200	68.0°	66.8°	0.0°	66.8°	72°				10,152		74%	75.27
40-44/38	42.5	15.1		722	8,000	5.255	3,794	1,200	67.0°	67.6°	0.0°	67.6°	72°				-		67%	-
45-49/42	47.5	17.0		512	8,000	5.255	2,691	1,200	66.0°	68.3°	0.0°	68.3°	72°				-		50%	-
50-54/47	52.5	19.7	25.8	659	8,000	5.255	3,463	1,200	60.3°	69.1°	0.0°	69.1°	72°	75,816	1,746	6.32			44%	-
55-59/52	57.5	22.9	26.0	829	8,000	5.255	4,357	1,200	60.3°	69.8°	0.0°	69.8°	72°	82,296	2,588	6.86			48%	-
60-64/56	62.5	25.7	26.2	1010	8,000	5.255	5,308	1,200	60.3°	70.6°	0.0°	70.6°	72°	88,776	3,669	7.40			52%	-
65-69/60	67.5	28.7	26.4	812	8,000	5.255	4,267	1,200	60.3°	71.3°	0.0°	71.3°	72°	95,256	3,396	7.94			55%	-
70-74/63	72.5	31.0	26.6	470	8,000	5.255	2,470	1,200	60.3°	72.1°	0.0°	72.1°	72°	101,736	2,242	8.48			59%	-
75-79/66	77.5	32.4	26.8	436	8,000	5.255	2,291	1,200	60.3°	72.8°	0.0°	72.8°	72°	108,216	2,354	9.02			63%	-
80-84/69	82.5	33.8	26.9	265	8,000	5.255	1,393	1,200	60.3°	73.6°	0.0°	73.6°	72°	114,696	1,607	9.56			67%	-
85-89/72	87.5	36.5	27.1	106	8,000	5.255	557	1,200	60.3°	74.3°	0.0°	74.3°	72°	121,176	717	10.10			71%	-
90-94/73	92.5	39.2	27.3	17	8,000	5.255	89	1,200	60.3°	75.1°	0.0°	75.1°	72°	127,656	128	10.64			74%	
				8,760.00			46,038								18,447	10.64				1,105

Title	**BAS Upgrades & Modifications**
ECM#	**7**
Project:	**SCI Houtzdale**
Site:	**SCI Houtzdale**

CONVERSION FACTORS				Design Conditions	
SLR	**99%**	Sensible	/latent	Supply CFM	8,000
FANHP (F.L.)	**6.39**	HP@	8,000	Total Cooling	171,000
RAFHP (F.L.)	-	HP@	6,800	Sensible Cooling	168,480
FMEFF	**90%**	Percent		Air Side TD	19.50
CFMREF	**8,000**	CFM		Supply HP	7.50
DREFF	**97%**	Percent	(@F.L.)	T.S.P.	3.0
MINVOL	**3,200**	CFM	CFM	Supply Fan Eff	60%
Conv. Fact.	6,344	60	0.24	Return CFM	6,800
Off Coil Conditions	60	25.87	28	Return T.S.P.	-
Btu/CCF	102,800	Heat EX Eff Wtr:		Return Fan HP	-
kW/Ton	0.95	Heat EX Eff Smr:		Return Fan Eff	60%

104,000

Existing Operation

Bin DB temp/ WetBulb	Average Temp	enthapy OA btu/lb	enthapy Mixed Air btu/lb	Bin hrs	SA air flow CFM	Fan kW	Fan kWh	OA air flow CFM	Discharge Air Temp	MAT Air Temp	Heat Pipe Air Temp DT °F	MAT Air Temp w/ Hpipe	Space Temp setpoint	Total Cooling BTU/Hr	Total Cooling kW/Hyear	Total Cooling Demand Tons	Total Heating BTU/Hr	Total Reheat BTU/Hr	Run Fraction	Existing Heating CCF/year
-15 -11 / -12.6	-12.5	0.0		0	8,000	5.326	-	1,200	75.0°	59.3°	0.0°	59.3°	72°				104,000		100%	-
-10 -6 /-7.1	-7.5	0.0		0	8,000	5.326	-	1,200	75.0°	60.1°	0.0°	60.1°	72°				104,000		100%	-
-5 -1 /-2.9	-2.5	0.0		0	8,000	5.326	-	1,200	75.0°	60.8°	0.0°	60.8°	72°				104,000		100%	-
0-4/1	2.5	0.0		2	8,000	5.326	11	1,200	75.0°	61.6°	0.0°	61.6°	72°				104,000		100%	2.59
5-9/6	7.5	2.9		5	8,000	5.326	27	1,200	75.0°	62.3°	0.0°	62.3°	72°				104,000		100%	6.49
10-14/11	12.5	4.2		77	8,000	5.326	410	1,200	75.0°	63.1°	0.0°	63.1°	72°				103,032		99%	98.02
15-19/15	17.5	5.7		270	8,000	5.326	1,438	1,200	75.0°	63.8°	0.0°	63.8°	72°				96,552		93%	301.83
20-24/20	22.5	7.3		452	8,000	5.326	2,407	1,200	75.0°	64.6°	0.0°	64.6°	72°				90,072		87%	439.74
25-29/25	27.5	9.0		411	8,000	5.326	2,189	1,200	75.0°	65.3°	0.0°	65.3°	72°				83,592		80%	344.39
30-34/30	32.5	11.1		897	8,000	5.326	4,777	1,200	75.0°	66.1°	0.0°	66.1°	72°				77,112		74%	639.61
35-39/34	37.5	12.8		808	8,000	5.326	4,303	1,200	75.0°	66.8°	0.0°	66.8°	72°				70,632		68%	483.39
40-44/38	42.5	15.1		722	8,000	5.326	3,845	1,200	75.0°	67.6°	0.0°	67.6°	72°				64,152		62%	356.32
45-49/42	47.5	17.0		512	8,000	5.326	2,727	1,200	75.0°	68.3°	0.0°	68.3°	72°				57,672		75%	276.19
50-54/47	52.5	19.7	25.8	659	8,000	5.326	3,510	1,200	59.9°	69.1°	0.0°	69.1°	72°	79,272	1,917	6.61	-		46%	
55-59/52	57.5	22.9	26.0	829	8,000	5.326	4,415	1,200	59.9°	69.8°	0.0°	69.8°	72°	85,752	2,822	7.15	-		50%	
60-64/56	62.5	25.7	26.2	1010	8,000	5.326	5,379	1,200	59.9°	70.6°	0.0°	70.6°	72°	92,232	3,978	7.69	-		54%	
65-69/60	67.5	28.7	26.4	812	8,000	5.326	4,324	1,200	59.9°	71.3°	0.0°	71.3°	72°	98,712	3,663	8.23			58%	
70-74/63	72.5	31.0	26.6	470	8,000	5.326	2,503	1,200	59.9°	72.1°	0.0°	72.1°	72°	105,192	2,408	8.77			62%	
75-79/66	77.5	32.4	26.8	436	8,000	5.326	2,322	1,200	59.9°	72.8°	0.0°	72.8°	72°	111,672	2,517	9.31			65%	
80-84/69	82.5	33.8	26.9	265	8,000	5.326	1,411	1,200	59.9°	73.6°	0.0°	73.6°	72°	118,152	1,713	9.85			69%	
85-89/72	87.5	36.5	27.1	106	8,000	5.326	565	1,200	59.9°	74.3°	0.0°	74.3°	72°	124,632	762	10.39			73%	
90-94/73	92.5	39.2	27.3	17	8,000	5.326	91	1,200	59.9°	75.1°	0.0°	75.1°	72°	131,112	135	10.93			77%	
				8,760.00			46,652								19,915	10.93				2,949

CONVERSION FACTORS				Design Conditions	
	99%	Sensible	/latent	Supply CFM	8,000
FANHP (F.L.)	**6.39**	HP@	8,000	Total Cooling	171,000
RAFHP (F.L.)	-	HP@	6,800	Sensible Cooling	168,480
FMEFF	**90%**	Percent		Air Side TD	19.50
CFMREF	**8,000**	CFM		Supply HP	7.50
DREFF	**97%**	Percent	(@F.L.)	T.S.P.	3.0
MINVOL	**3,200**	CFM	CFM	Supply Fan Eff	60%
Conv. Fact.	6,344	60	0.24	Return CFM	6,800
Off Coil Conditions	60	25.87	28	Return T.S.P.	-
Ht Pmp COP	102,800	Heat EX Eff Wtr:		Return Fan HP	-
kW/Ton	0.95	Heat EX Eff Smr:		Return Fan Eff	60%

104,000

Proposed Operation

Bin DB temp/ WetBulb	Average Temp	enthapy OA btu/lb	enthapy Mixed Air btu/lb	Bin hrs	SA air flow CFM	Fan kW	Fan kWh	OA air flow CFM	Discharge Air Temp	MAT Air Temp	Heat Pipe Air Temp DT °F	MAT Air Temp w/ Hpipe	Space Temp setpoint	Total Cooling BTU/Hr	Total Cooling kW/Hyear	Total Cooling Demand Tons	Total Heating BTU/Hr	Total Reheat BTU/Hr	Run Fraction	Proposed Heating CCF/year
-15 -11 / -12.6	-12.5	0.0		0	8,000	5.326	-	1,200	75.0°	59.3°	0.0°	59.3°	72°				104,000		100%	-
-10 -6 /-7.1	-7.5	0.0		0	8,000	5.326	-	1,200	75.0°	60.1°	0.0°	60.1°	72°				104,000		100%	-
-5 -1 /-2.9	-2.5	0.0		0	8,000	5.326	-	1,200	75.0°	60.8°	0.0°	60.8°	72°				104,000		100%	-
0-4/1	2.5	0.0		2	8,000	5.326	11	1,200	75.0°	61.6°	0.0°	61.6°	72°				104,000		100%	2.59
5-9/6	7.5	2.9		5	8,000	5.326	27	1,200	74.0°	62.3°	0.0°	62.3°	72°				100,872		97%	6.10
10-14/11	12.5	4.2		77	8,000	5.326	410	1,200	73.0°	63.1°	0.0°	63.1°	72°				85,752		82%	67.90
15-19/15	17.5	5.7		270	8,000	5.326	1,438	1,200	72.0°	63.8°	0.0°	63.8°	72°				70,632		68%	161.53
20-24/20	22.5	7.3		452	8,000	5.326	2,407	1,200	71.0°	64.6°	0.0°	64.6°	72°				55,512		53%	167.03
25-29/25	27.5	9.0		411	8,000	5.326	2,189	1,200	70.0°	65.3°	0.0°	65.3°	72°				40,392		39%	80.41
30-34/30	32.5	11.1		897	8,000	5.326	4,777	1,200	69.0°	66.1°	0.0°	66.1°	72°				25,272		24%	68.70
35-39/34	37.5	12.8		808	8,000	5.326	4,303	1,200	68.0°	66.8°	0.0°	66.8°	72°				10,152		10%	9.99
40-44/38	42.5	15.1		722	8,000	5.326	3,845	1,200	67.0°	67.6°	0.0°	67.6°	72°				-		0%	-
45-49/42	47.5	17.0		512	8,000	5.326	2,727	1,200	66.0°	68.3°	0.0°	68.3°	72°				-		75%	-
50-54/47	52.5	19.7	25.8	659	8,000	5.326	3,510	1,200	59.9°	69.1°	0.0°	69.1°	72°	79,272	1,917	6.61	-		46%	
55-59/52	57.5	22.9	26.0	829	8,000	5.326	4,415	1,200	59.9°	69.8°	0.0°	69.8°	72°	85,752	2,822	7.15	-		50%	
60-64/56	62.5	25.7	26.2	1010	8,000	5.326	5,379	1,200	59.9°	70.6°	0.0°	70.6°	72°	92,232	3,978	7.69	-		54%	
65-69/60	67.5	28.7	26.4	812	8,000	5.326	4,324	1,200	59.9°	71.3°	0.0°	71.3°	72°	98,712	3,663	8.23			58%	
70-74/63	72.5	31.0	26.6	470	8,000	5.326	2,503	1,200	59.9°	72.1°	0.0°	72.1°	72°	105,192	2,408	8.77			62%	
75-79/66	77.5	32.4	26.8	436	8,000	5.326	2,322	1,200	59.9°	72.8°	0.0°	72.8°	72°	111,672	2,517	9.31			65%	
80-84/69	82.5	33.8	26.9	265	8,000	5.326	1,411	1,200	59.9°	73.6°	0.0°	73.6°	72°	118,152	1,713	9.85			69%	
85-89/72	87.5	36.5	27.1	106	8,000	5.326	565	1,200	59.9°	74.3°	0.0°	74.3°	72°	124,632	762	10.39			73%	
90-94/73	92.5	39.2	27.3	17	8,000	5.326	91	1,200	59.9°	75.1°	0.0°	75.1°	72°	131,112	135	10.93			77%	
				8,760.00			46,652								19,915	10.93				564

Title	**BAS Upgrades & Modifications**
ECM#	**7**
Project:	**SCI Houtzdale**
Site:	**SCI Houtzdale**

CONVERSION FACTORS				Design Conditions	
SLR	**67%**	Sensible	/latent	Supply CFM	3,770
FANHP (F.L.)	**1.11**	HP@	3,770	Total Cooling	162,000
RAFHP (F.L.)	**0.44**	HP@	8,925	Sensible Cooling	107,897
FMEFF	**84%**	Percent		Air Side TD	26.50
CFMREF	**3,770**	CFM		Supply HP	2
DREFF	**97%**	Percent	(@F.L.)	T.S.P.	1.5
MINVOL	**1,508**	CFM	CFM	Supply Fan Eff	80%
Conv. Fact.	6,344	60	0.24	Return CFM	8,925
Off Coil Conditions	53	21.86	28	Return T.S.P.	0.3
Btu/CCF	102,800	Heat Pipe Eff	-	Return Fan HP	0.5
kW/Ton	0.95			Return Fan Eff	80%

126,000

Existing Operation

Bin DB temp/ WetBulb	Average Temp	enthapy OA btu/lb	enthapy Mixed Air btu/lb	Bin hrs	SA air flow CFM	Fan kW	Fan kWh	OA air flow CFM	Discharge Air Temp	MAT Air Temp	Heat Pipe Air Temp DT °F	MAT Air Temp w/ Hpipe	Space Temp setpoint	Total Cooling BTU/Hr	Total Cooling kW/Hyear	Total Cooling Demand Tons	Total Heating BTU/Hr	Total Reheat BTU/Hr	Run Fraction	Existing Heating CCF/year
-15 -11 / -12.6	-12.5	0.0		0	3,770	1.387	-	566	75.0°	59.3°	0.0°	59.3°	72°				63,822		100%	-
-10 -6 /-7.1	-7.5	0.0		0	3,770	1.387	-	566	75.0°	60.1°	0.0°	60.1°	72°				60,769		100%	-
-5 -1 /-2.9	-2.5	0.0		0	3,770	1.387	-	566	75.0°	60.8°	0.0°	60.8°	72°				57,715		100%	-
0-4/1	2.5	0.0		2	3,770	1.387	3	566	75.0°	61.6°	0.0°	61.6°	72°				54,661		43%	0.59
5-9/6	7.5	2.9		5	3,770	1.387	7	566	75.0°	62.3°	0.0°	62.3°	72°				51,608		41%	1.32
10-14/11	12.5	4.2		77	3,770	1.387	107	566	75.0°	63.1°	0.0°	63.1°	72°				48,554		39%	17.97
15-19/15	17.5	5.7		270	3,770	1.387	375	566	75.0°	63.8°	0.0°	63.8°	72°				45,500		36%	55.33
20-24/20	22.5	7.3		452	3,770	1.387	627	566	75.0°	64.6°	0.0°	64.6°	72°				42,446		34%	80.61
25-29/25	27.5	9.0		411	3,770	1.387	570	566	75.0°	65.3°	0.0°	65.3°	72°				39,393		31%	63.13
30-34/30	32.5	11.1		897	3,770	1.387	1,244	566	75.0°	66.1°	0.0°	66.1°	72°				36,339		29%	117.24
35-39/34	37.5	12.8		808	3,770	1.387	1,121	566	75.0°	66.8°	0.0°	66.8°	72°				33,285		26%	88.61
40-44/38	42.5	15.1		722	3,770	1.387	1,001	566	75.0°	67.6°	0.0°	67.6°	72°				30,232		24%	65.31
45-49/42	47.5	17.0		512	3,770	1.387	710	566	75.0°	68.3°	0.0°	68.3°	72°				27,178		30%	52.06
50-54/47	52.5	19.7	25.8	659	3,770	1.387	914	566	53.4°	69.1°	0.0°	69.1°	72°	67,522	1,468	5.63	-		42%	
55-59/52	57.5	22.9	26.0	829	3,770	1.387	1,150	566	53.4°	69.8°	0.0°	69.8°	72°	70,624	2,021	5.89	-		44%	-
60-64/56	62.5	25.7	26.2	1010	3,770	1.387	1,401	566	53.4°	70.6°	0.0°	70.6°	72°	73,726	2,683	6.14	-		46%	-
65-69/60	67.5	28.7	26.4	812	3,770	1.387	1,126	566	53.4°	71.3°	0.0°	71.3°	72°	76,827	2,342	6.40			47%	-
70-74/63	72.5	31.0	26.6	470	3,770	1.387	652	566	53.4°	72.1°	0.0°	72.1°	72°	79,929	1,467	6.66			49%	-
75-79/66	77.5	32.4	26.8	436	3,770	1.387	605	566	53.4°	72.8°	0.0°	72.8°	72°	83,030	1,469	6.92			51%	-
80-84/69	82.5	33.8	26.9	265	3,770	1.387	368	566	53.4°	73.6°	0.0°	73.6°	72°	86,132	961	7.18			53%	-
85-89/72	87.5	36.5	27.1	106	3,770	1.387	147	566	53.4°	74.3°	0.0°	74.3°	72°	89,234	412	7.44			55%	-
90-94/73	92.5	39.2	27.3	17	3,770	1.387	24	566	53.4°	75.1°	0.0°	75.1°	72°	92,335	71	7.69			57%	
				8,760.00			12,151								12,894	7.69				542

CONVERSION FACTORS				Design Conditions	
	67%	Sensible	/latent	Supply CFM	3,770
FANHP (F.L.)	**1.11**	HP@	3,770	Total Cooling	162,000
RAFHP (F.L.)	**0.44**	HP@	8,925	Sensible Cooling	107,897
FMEFF	**84%**	Percent		Air Side TD	26.50
CFMREF	**3,770**	CFM		Supply HP	1.50
DREFF	**97%**	Percent	(@F.L.)	T.S.P.	1.5
MINVOL	**1,508**	CFM	CFM	Supply Fan Eff	80%
Conv. Fact.	6,344	60	0.24	Return CFM	8,925
Off Coil Conditions	53	21.86	28	Return T.S.P.	0.3
Gas (BTU/CCF):	102,800	Heat Pipe Eff	-	Return Fan HP	0.5
kW/ton=	0.95			Return Fan Eff	80%

126,000

Proposed Operation

Bin DB temp/ WetBulb	Average Temp	enthapy OA btu/lb	enthapy Mixed Air btu/lb	Bin hrs	SA air flow CFM	Fan kW	Fan kWh	OA air flow CFM	Discharge Air Temp	MAT Air Temp	Heat Pipe Air Temp DT °F	MAT Air Temp w/ Hpipe	Space Temp setpoint	Total Cooling BTU/Hr	Total Cooling kW/Hyear	Total Cooling Demand Tons	Total Heating BTU/Hr	Total Reheat BTU/Hr	Run Fraction	Proposed Heating CCF/year
-15 -11 / -12.6	-12.5	0.0		0	3,770	1.387	-	566	75.0°	59.3°	0.0°	59.3°	72°				63,822		100%	-
-10 -6 /-7.1	-7.5	0.0		0	3,770	1.387	-	566	75.0°	60.1°	0.0°	60.1°	72°				60,769		100%	-
-5 -1 /-2.9	-2.5	0.0		0	3,770	1.387	-	566	75.0°	60.8°	0.0°	60.8°	72°				57,715		100%	-
0-4/1	2.5	0.0		2	3,770	1.387	3	566	75.0°	61.6°	0.0°	61.6°	72°				54,661		43%	0.59
5-9/6	7.5	2.9		5	3,770	1.387	7	566	74.0°	62.3°	0.0°	62.3°	72°				47,536		38%	1.12
10-14/11	12.5	4.2		77	3,770	1.387	107	566	73.0°	63.1°	0.0°	63.1°	72°				40,411		32%	12.45
15-19/15	17.5	5.7		270	3,770	1.387	375	566	72.0°	63.8°	0.0°	63.8°	72°				33,285		26%	29.61
20-24/20	22.5	7.3		452	3,770	1.387	627	566	71.0°	64.6°	0.0°	64.6°	72°				26,160		21%	30.62
25-29/25	27.5	9.0		411	3,770	1.387	570	566	70.0°	65.3°	0.0°	65.3°	72°				19,035		15%	14.74
30-34/30	32.5	11.1		897	3,770	1.387	1,244	566	69.0°	66.1°	0.0°	66.1°	72°				11,909		9%	12.59
35-39/34	37.5	12.8		808	3,770	1.387	1,121	566	68.0°	66.8°	0.0°	66.8°	72°				4,784		4%	1.83
40-44/38	42.5	15.1		722	3,770	1.387	1,001	566	67.0°	67.6°	0.0°	67.6°	72°				-		0%	-
45-49/42	47.5	17.0		512	3,770	1.387	710	566	66.0°	68.3°	0.0°	68.3°	72°				-		30%	-
50-54/47	52.5	19.7	25.8	659	3,770	1.387	914	566	53.4°	69.1°	0.0°	69.1°	72°	67,522	1,468	5.63	-		42%	
55-59/52	57.5	22.9	26.0	829	3,770	1.387	1,150	566	53.4°	69.8°	0.0°	69.8°	72°	70,624	2,021	5.89	-		44%	-
60-64/56	62.5	25.7	26.2	1010	3,770	1.387	1,401	566	53.4°	70.6°	0.0°	70.6°	72°	73,726	2,683	6.14			46%	-
65-69/60	67.5	28.7	26.4	812	3,770	1.387	1,126	566	53.4°	71.3°	0.0°	71.3°	72°	76,827	2,342	6.40			47%	-
70-74/63	72.5	31.0	26.6	470	3,770	1.387	652	566	53.4°	72.1°	0.0°	72.1°	72°	79,929	1,467	6.66			49%	-
75-79/66	77.5	32.4	26.8	436	3,770	1.387	605	566	53.4°	72.8°	0.0°	72.8°	72°	83,030	1,469	6.92			51%	-
80-84/69	82.5	33.8	26.9	265	3,770	1.387	368	566	53.4°	73.6°	0.0°	73.6°	72°	86,132	961	7.18			53%	-
85-89/72	87.5	36.5	27.1	106	3,770	1.387	147	566	53.4°	74.3°	0.0°	74.3°	72°	89,234	412	7.44			55%	-
90-94/73	92.5	39.2	27.3	17	3,770	1.387	24	566	53.4°	75.1°	0.0°	75.1°	72°	92,335	71	7.69			57%	
				8,760.00			12,151								12,894	7.69				104

Title	**BAS Upgrades & Modifications**
ECM#	**7**
Project:	**SCI Houtzdale**
Site:	**SCI Houtzdale**

CONVERSION FACTORS				Design Conditions	
SLR	**68%**	Sensible	/latent	Supply CFM	16,300
FANHP (F.L.)	**17.13**	HP@	16,300	Total Cooling	381,750	302,000
RAFHP (F.L.)	**5.04**	HP@	13,855	Sensible Cooling	260,539
FMEFF	**88%**	Percent		Air Side TD	14.80
CFMREF	**16,300**	CFM		Supply HP	3.0
DREFF	**97%**	Percent	(@F.L.)	T.S.P.	4.0
MINVOL	**6,520**	CFM	CFM	Supply Fan Eff	60%
Conv. Fact.	6,344	60	0.24	Return CFM	13,855
Off Coil Conditions	65	22.10		Return T.S.P.	1.5
Btu/CCF	102,800	Heat EX Eff Wtr:		Return Fan HP	5.0
kW/Ton	0.95	Heat EX Eff Smr:		Return Fan Eff	65%

Existing Operation

Bin DB temp/ WetBulb	Average Temp	enthapy OA btu/lb	enthapy Mixed Air btu/lb	Bin hrs	SA air flow CFM	Fan kW	Fan kWh	OA air flow CFM	Discharge Air Temp	MAT Air Temp	Heat Pipe Air Temp DT°F	MAT Air Temp w/ Hpipe	Space Temp setpoint	Total Cooling BTU/Hr	Total Cooling kWh/year	Total Cooling Demand Tons	Total Heating BTU/Hr	Total Reheat BTU/Hr	Run Fraction	Existing Heating CCF/year
-15 -11 / -12.6	-12.5	0.0		0	16,300	18.901	-	2,445	75.0°	59.3°	0.0°	59.3°	72°				275,943		100%	-
-10 -6 / -7.1	-7.5	0.0		0	16,300	18.901	-	2,445	75.0°	60.1°	0.0°	60.1°	72°				262,740		100%	-
-5 -1 / -2.9	-2.5	0.0		0	16,300	18.901	-	2,445	75.0°	60.8°	0.0°	60.8°	72°				249,537		100%	-
0-4/1	2.5	0.0		2	16,300	18.901	38	2,445	75.0°	61.6°	0.0°	61.6°	72°				236,334		78%	4.61
5-9/6	7.5	2.9		5	16,300	18.271	91	2,445	75.0°	62.3°	0.0°	62.3°	72°				223,131		74%	10.28
10-14/11	12.5	4.2		77	15,485	17.684	1,362	2,323	75.0°	63.1°	0.0°	63.1°	72°				199,431		66%	126.47
15-19/15	17.5	5.7		270	13,855	16.440	4,439	2,078	75.0°	63.8°	0.0°	63.8°	72°				167,216		55%	311.76
20-24/20	22.5	7.3		452	13,040	15.804	7,144	1,956	75.0°	64.6°	0.0°	64.6°	72°				146,817		49%	402.34
25-29/25	27.5	9.0		411	12,225	15.156	6,229	1,834	75.0°	65.3°	0.0°	65.3°	72°				127,739		42%	276.95
30-34/30	32.5	11.1		897	11,410	14.491	12,998	1,712	75.0°	66.1°	0.0°	66.1°	72°				109,981		36%	448.06
35-39/34	37.5	12.8		808	9,780	13.109	10,592	1,467	75.0°	66.8°	0.0°	66.8°	72°				86,348		29%	248.78
40-44/38	42.5	15.1		722	8,965	12.387	8,943	1,345	75.0°	67.6°	0.0°	67.6°	72°				71,890		24%	154.09
45-49/42	47.5	17.0		512	7,335	11.644	5,962	1,100	75.0°	68.3°	0.0°	68.3°	72°				52,878		40%	135.06
50-54/47	52.5	19.7	25.8	659	6,520	10.874	7,166	978	65.3°	69.1°	0.0°	69.1°	72°	-	-		-		15%	
55-59/52	57.5	22.9	26.0	829	7,335	11.644	9,653	1,100	65.3°	69.8°	0.0°	69.8°	72°	129,552	2,885	10.80	-		34%	-
60-64/56	62.5	25.7	26.2	1010	8,965	12.387	12,511	1,345	65.3°	70.6°	0.0°	70.6°	72°	165,717	5,752	13.81	-		43%	-
65-69/60	67.5	28.7	26.4	812	10,595	13.807	11,212	1,589	65.3°	71.3°	0.0°	71.3°	72°	204,564	7,047	17.05			54%	-
70-74/63	72.5	31.0	26.6	470	12,225	15.156	7,123	1,834	65.3°	72.1°	0.0°	72.1°	72°	246,093	5,903	20.51			64%	-
75-79/66	77.5	32.4	26.8	436	13,855	16.440	7,168	2,078	65.3°	72.8°	0.0°	72.8°	72°	290,304	7,620	24.19			76%	-
80-84/69	82.5	33.8	26.9	265	15,485	17.684	4,686	2,323	65.3°	73.6°	0.0°	73.6°	72°	337,197	6,249	28.10			88%	-
85-89/72	87.5	36.5	27.1	106	15,485	17.684	1,875	2,323	65.3°	74.3°	0.0°	74.3°	72°	349,937	2,692	29.16			92%	-
90-94/73	92.5	39.2	27.3	17	16,300	18.271	311	2,445	65.3°	75.1°	0.0°	75.1°	72°	381,765	514	31.81			100%	
				8,760.00			119,501								38,661	31.81				2,118
																				130

CONVERSION FACTORS				Design Conditions	
_	**68%**	Sensible	/latent	Supply CFM	16,300
FANHP (F.L.)	**17.13**	HP@	16,300	Total Cooling	381,750	302,000
RAFHP (F.L.)	**5.04**	HP@	13,855	Sensible Cooling	260,539
FMEFF	**88%**	Percent		Air Side TD	14.80
CFMREF	**16,300**	CFM		Supply HP	3.00
DREFF	**97%**	Percent	(@F.L.)	T.S.P.	4.0
MINVOL	**6,520**	CFM	CFM	Supply Fan Eff	60%
Conv. Fact.	6,344	60	0.24	Return CFM	13,855
Off Coil Conditions	65	22.10	28	Return T.S.P.	1.5
Ht Pmp COP	102,800	Heat EX Eff Wtr:		Return Fan HP	5.0
kW/Ton	0.95	Heat EX Eff Smr:		Return Fan Eff	65%

Proposed Operation

Bin DB temp/ WetBulb	Average Temp	enthapy OA btu/lb	enthapy Mixed Air btu/lb	Bin hrs	SA air flow CFM	Fan kW	Fan kWh	OA air flow CFM	Discharge Air Temp	MAT Air Temp	Heat Pipe Air Temp DT°F	MAT Air Temp w/ Hpipe	Space Temp setpoint	Total Cooling BTU/Hr	Total Cooling kWh/year	Total Cooling Demand Tons	Total Heating BTU/Hr	Total Reheat BTU/Hr	Run Fraction	Proposed Heating CCF/year
-15 -11 / -12.6	-12.5	0.0		0	16,300	18.901	-	2,445	75.0°	59.3°	0.0°	59.3°	72°				275,943		100%	-
-10 -6 / -7.1	-7.5	0.0		0	16,300	18.901	-	2,445	74.0°	60.1°	0.0°	60.1°	72°				245,136		100%	-
-5 -1 / -2.9	-2.5	0.0		0	16,300	18.901	-	2,445	73.0°	60.8°	0.0°	60.8°	72°				214,329		100%	-
0-4/1	2.5	0.0		2	16,300	18.901	38	2,445	72.0°	61.6°	0.0°	61.6°	72°				183,522		61%	2
5-9/6	7.5	2.9		5	16,300	18.039	90	2,445	71.0°	62.3°	0.0°	62.3°	72°				152,715		51%	4
10-14/11	12.5	4.2		77	15,485	15.593	1,201	2,323	70.0°	63.1°	0.0°	63.1°	72°				115,812		38%	36
15-19/15	17.5	5.7		270	13,855	11.260	3,040	2,078	69.0°	63.8°	0.0°	63.8°	72°				77,436		26%	57
20-24/20	22.5	7.3		452	13,040	9.445	4,269	1,956	68.0°	64.6°	0.0°	64.6°	72°				48,235		16%	37
25-29/25	27.5	9.0		411	12,225	7.834	3,220	1,834	67.0°	65.3°	0.0°	65.3°	72°				22,115		7%	7
30-34/30	32.5	11.1		897	11,410	6.412	5,752	1,712	66.0°	66.1°	0.0°	66.1°	72°				-		0%	-
35-39/34	37.5	12.8		808	9,780	4.101	3,313	1,467	65.0°	66.8°	0.0°	66.8°	72°				-		0%	-
40-44/38	42.5	15.1		722	8,965	3.185	2,299	1,345	64.0°	67.6°	0.0°	67.6°	72°				-		0%	-
45-49/42	47.5	17.0		512	7,335	2.417	1,237	1,100	63.0°	68.3°	0.0°	68.3°	72°				-		40%	-
50-54/47	52.5	19.7	25.8	659	6,520	1.781	1,174	978	65.3°	69.1°	0.0°	69.1°	72°	-	-		-		15%	-
55-59/52	57.5	22.9	26.0	829	7,335	2.417	2,003	1,100	65.3°	69.8°	0.0°	69.8°	72°	129,552	2,885	10.80			34%	-
60-64/56	62.5	25.7	26.2	1010	8,965	3.185	3,217	1,345	65.3°	70.6°	0.0°	70.6°	72°	165,717	5,752	13.81			43%	-
65-69/60	67.5	28.7	26.4	812	10,595	5.169	4,198	1,589	65.3°	71.3°	0.0°	71.3°	72°	204,564	7,047	17.05			54%	
70-74/63	72.5	31.0	26.6	470	12,225	7.834	3,682	1,834	65.3°	72.1°	0.0°	72.1°	72°	246,093	5,903	20.51			64%	
75-79/66	77.5	32.4	26.8	436	13,855	11.260	4,910	2,078	65.3°	72.8°	0.0°	72.8°	72°	290,304	7,620	24.19			76%	
80-84/69	82.5	33.8	26.9	265	15,485	15.593	4,132	2,323	65.3°	73.6°	0.0°	73.6°	72°	337,197	6,249	28.10			88%	
85-89/72	87.5	36.5	27.1	106	15,485	15.593	1,653	2,323	65.3°	74.3°	0.0°	74.3°	72°	349,937	2,692	29.16			92%	
90-94/73	92.5	39.2	27.3	17	16,300	18.039	307	2,445	65.3°	75.1°	0.0°	75.1°	72°	381,765	514	31.81			100%	
				8,760.00			49,734								38,661	31.81				143
																				14.31
																				85.88

Title	**BAS Upgrades & Modifications**
ECM#	**7**
Project:	**SCI Houtzdale**
Site:	**SCI Houtzdale**

CONVERSION FACTORS				Design Conditions		
SLR	**60%**	Sensible	/latent	Supply CFM	9,640	
FANHP (F.L.)	**10.13**	HP@	9,640	Total Cooling	570,000	364,000
RAFHP (F.L.)	**3.23**	HP@	8,194	Sensible Cooling	343,570	
FMEFF	**91%**	Percent		Air Side TD	33.00	
CFMREF	**9,640**	CFM		Supply HP	15	
DREFF	**97%**	Percent	(@F.L.)	T.S.P.	4.0	
MINVOL	**3,856**	CFM	CFM	Supply Fan Eff	60%	
Conv. Fact.	6,344	60	0.24	Return CFM	8,194	
Off Coil Conditions	54	21.69	28	Return T.S.P.	1.5	
Gas (BTU/CCF):	102,800	Heat Pipe Eff.	-	Return Fan HP	2.5	
kW/ton=	0.95			Return Fan Eff	60%	

Existing Operation

Bin DB temp/ WetBulb	Average Temp	enthapy OA btu/lb	enthapy Mixed Air btu/lb	Bin hrs	SA air flow CFM	Fan kW	Fan kWh	OA air flow CFM	Discharge Air Temp	MAT Air Temp	Heat Pipe Air Temp DT °F	MAT Air Temp w/ Hpipe	Space Temp setpoint	Total Cooling BTU/Hr	Total Cooling kW/h/year	Total Cooling Demand Tons	Total Heating BTU/Hr	Total Reheat BTU/Hr	Run Fraction	Existing Heating CCF/year
-15 -11 / -12.6	-12.5	0.0		0	9,640	11.131	-	2,305	75.0°	51.8°	0.0°	51.8°	72°				241,588		100%	-
-10 -6 /-7.1	-7.5	0.0		0	9,640	11.131	-	2,305	75.0°	53.0°	0.0°	53.0°	72°				229,141		100%	-
-5 -1 /-2.9	-2.5	0.0		0	9,640	11.131	-	2,305	75.0°	54.2°	0.0°	54.2°	72°				216,694		100%	-
0-4/1	2.5	0.0		2	9,640	11.131	22	2,305	75.0°	55.4°	0.0°	55.4°	72°				204,247		56%	2.86
5-9/6	7.5	2.9		5	9,640	11.131	56	2,305	75.0°	56.6°	0.0°	56.6°	72°				191,800		53%	6.30
10-14/11	12.5	4.2		77	9,158	10.773	830	2,190	75.0°	57.8°	0.0°	57.8°	72°				170,385		47%	76.59
15-19/15	17.5	5.7		270	8,194	10.015	2,704	1,959	75.0°	59.0°	0.0°	59.0°	72°				141,870		39%	186.19
20-24/20	22.5	7.3		452	7,712	9.628	4,352	1,844	75.0°	60.2°	0.0°	60.2°	72°				123,567		34%	236.46
25-29/25	27.5	9.0		411	7,712	9.628	3,957	1,844	75.0°	61.4°	0.0°	61.4°	72°				113,610		31%	181.75
30-34/30	32.5	11.1		897	6,748	8.828	7,919	1,614	75.0°	62.6°	0.0°	62.6°	72°				90,695		25%	252.80
35-39/34	37.5	12.8		808	5,784	7.986	6,453	1,383	75.0°	63.8°	0.0°	63.8°	72°				70,271		19%	136.70
40-44/38	42.5	15.1		722	5,302	7.546	5,448	1,268	75.0°	64.9°	0.0°	64.9°	72°				57,569		16%	81.98
45-49/42	47.5	17.0		512	4,338	7.094	3,632	1,037	75.0°	66.1°	0.0°	66.1°	72°				41,501		35%	92.75
50-54/47	52.5	19.7	25.4	659	3,856	6.625	4,366	922	53.6°	67.3°	0.0°	67.3°	72°	64,801	507	5.40			15%	-
55-59/52	57.5	22.9	25.7	829	4,338	7.094	5,881	1,037	53.6°	68.5°	0.0°	68.5°	72°	78,591	711	6.55	-		14%	-
60-64/56	62.5	25.7	26.0	1010	5,302	7.546	7,622	1,268	53.6°	69.7°	0.0°	69.7°	72°	103,009	1,488	8.58	-		18%	-
65-69/60	67.5	28.7	26.3	812	6,266	8.412	6,830	1,498	53.6°	70.9°	0.0°	70.9°	72°	129,955	1,905	10.83			23%	-
70-74/63	72.5	31.0	26.6	470	7,712	9.628	4,525	1,844	53.6°	72.1°	0.0°	72.1°	72°	170,058	1,888	14.17			30%	-
75-79/66	77.5	32.4	26.9	436	7,712	9.628	4,198	1,844	53.6°	73.3°	0.0°	73.3°	72°	180,172	1,966	15.01			32%	-
80-84/69	82.5	33.8	27.2	265	8,676	10.394	2,755	2,075	53.6°	74.5°	0.0°	74.5°	72°	214,072	1,687	17.84			38%	-
85-89/72	87.5	36.5	27.5	106	9,158	10.773	1,142	2,190	53.6°	75.7°	0.0°	75.7°	72°	237,975	834	19.83			42%	-
90-94/73	92.5	39.2	27.8	17	9,640	11.131	189	2,305	53.6°	76.9°	0.0°	76.9°	72°	263,143	163	21.93			46%	
				8,760.00			72,880								11,149	21.93				1,254

CONVERSION FACTORS				Design Conditions		
	60%	Sensible	/latent	Supply CFM	9,640	
FANHP (F.L.)	**10.13**	HP@	9,640	Total Cooling	570,000	364,000
RAFHP (F.L.)	**3.23**	HP@	8,194	Sensible Cooling	343,570	
FMEFF	**91%**	Percent		Air Side TD	33.00	
CFMREF	**9,640**	CFM		Supply HP	15.00	
DREFF	**97%**	Percent	(@F.L.)	T.S.P.	4.0	
MINVOL	**3,856**	CFM	CFM	Supply Fan Eff	60%	
Conv. Fact.	6,344	60	0.24	Return CFM	8,194	
Off Coil Conditions	54	21.69	28	Return T.S.P.	1.5	
Gas (BTU/CCF):	102,800	Heat Pipe Eff.	-	Return Fan HP	2.5	
kW/ton=	0.95			Return Fan Eff	60%	

Proposed Operation

Bin DB temp/ WetBulb	Average Temp	enthapy OA btu/lb	enthapy Mixed Air btu/lb	Bin hrs	SA air flow CFM	Fan kW	Fan kWh	OA air flow CFM	Discharge Air Temp	MAT Air Temp	Heat Pipe Air Temp DT °F	MAT Air Temp w/ Hpipe	Space Temp setpoint	Total Cooling BTU/Hr	Total Cooling kW/h/year	Total Cooling Demand Tons	Total Heating BTU/Hr	Total Reheat BTU/Hr	Run Fraction	Proposed Heating CCF/year
-15 -11 / -12.6	-12.5	0.0		0	9,640	22.121	-	2,305	75.0°	51.8°	0.0°	51.8°	72°				241,588		100%	-
-10 -6 /-7.1	-7.5	0.0		0	9,640	22.121	-	2,305	75.0°	53.0°	0.0°	53.0°	72°				229,141		100%	-
-5 -1 /-2.9	-2.5	0.0		0	9,640	22.121	-	2,305	75.0°	54.2°	0.0°	54.2°	72°				216,694		100%	-
0-4/1	2.5	0.0		2	9,640	22.121	44	2,305	75.0°	55.4°	0.0°	55.4°	72°				204,247		56%	2.86
5-9/6	7.5	2.9		5	9,640	22.121	111	2,305	74.0°	56.6°	0.0°	56.6°	72°				181,389		53%	5.96
10-14/11	12.5	4.2		77	9,158	20.273	1,561	2,190	73.0°	57.8°	0.0°	57.8°	72°				150,604		47%	67.70
15-19/15	17.5	5.7		270	8,194	16.875	4,556	1,959	72.0°	59.0°	0.0°	59.0°	72°				115,321		39%	151.35
20-24/20	22.5	7.3		452	7,712	15.382	6,953	1,844	71.0°	60.2°	0.0°	60.2°	72°				90,251		34%	172.71
25-29/25	27.5	9.0		411	7,712	15.382	6,322	1,844	70.0°	61.4°	0.0°	61.4°	72°				71,965		31%	115.13
30-34/30	32.5	11.1		897	6,748	12.734	11,423	1,614	69.0°	62.6°	0.0°	62.6°	72°				46,968		25%	130.92
35-39/34	37.5	12.8		808	5,784	10.484	8,471	1,383	68.0°	63.8°	0.0°	63.8°	72°				26,544		19%	51.64
40-44/38	42.5	15.1		722	5,302	9.486	6,849	1,268	67.0°	64.9°	0.0°	64.9°	72°				11,760		16%	16.75
45-49/42	47.5	17.0		512	4,338	8.566	4,386	1,037	66.0°	66.1°	0.0°	66.1°	72°				-		35%	-
50-54/47	52.5	19.7	25.4	659	3,856	7.710	5,081	922	53.6°	67.3°	0.0°	67.3°	72°	64,801	507	5.40			15%	-
55-59/52	57.5	22.9	25.7	829	4,338	8.566	7,101	1,037	53.6°	68.5°	0.0°	68.5°	72°	78,591	711	6.55	-		14%	-
60-64/56	62.5	25.7	26.0	1010	5,302	9.486	9,581	1,268	53.6°	69.7°	0.0°	69.7°	72°	103,009	1,488	8.58	-		18%	-
65-69/60	67.5	28.7	26.3	812	6,266	11.561	9,387	1,498	53.6°	70.9°	0.0°	70.9°	72°	129,955	1,905	10.83	-		23%	-
70-74/63	72.5	31.0	26.6	470	7,712	15.382	7,230	1,844	53.6°	72.1°	0.0°	72.1°	72°	170,058	1,888	14.17			30%	-
75-79/66	77.5	32.4	26.9	436	7,712	15.382	6,707	1,844	53.6°	73.3°	0.0°	73.3°	72°	180,172	1,966	15.01			32%	-
80-84/69	82.5	33.8	27.2	265	8,676	18.491	4,900	2,075	53.6°	74.5°	0.0°	74.5°	72°	214,072	1,687	17.84			38%	-
85-89/72	87.5	36.5	27.5	106	9,158	20.273	2,149	2,190	53.6°	75.7°	0.0°	75.7°	72°	237,975	834	19.83			42%	-
90-94/73	92.5	39.2	27.8	17	9,640	22.121	376	2,305	53.6°	76.9°	0.0°	76.9°	72°	263,143	163	21.93			46%	
				8,760.00			103,188								11,149	21.93				715

Title	**BAS Upgrades & Modifications**
ECM#	**7**
Project:	**SCI Houtzdale**
Site:	**SCI Houtzdale**

CONVERSION FACTORS				Design Conditions		
SLR	**119%**	Sensible	/latent	Supply CFM	8,400	
FANHP (F.L.)	**7.72**	HP@	8,400	Total Cooling	251,250	664,000
RAFHP (F.L.)	-	HP@	0	Sensible Cooling	299,376	
FMEFF	**90%**	Percent		Air Side TD	33.00	
CFMREF	**8,400**	CFM		Supply HP	10	
DREFF	**97%**	Percent	(@F.L.)	T.S.P.	3.5	
MINVOL	**3,360**	CFM	CFM	Supply Fan Eff	60%	
Conv. Fact.	6,344	60	0.24	Return CFM	-	
Off Coil Conditions	54	22.52		Return T.S.P.		
Gas (BTU/CCF):	102,800	Heat Pipe Eff:	-	Return Fan HP	3.0	
kW/ton=	0.95			Return Fan Eff	60%	

Existing Operation

Bin DB temp/ WetBulb	Average Temp	enthapy OA btu/lb	enthapy Mixed Air btu/lb	Bin hrs	SA air flow CFM	Fan kW	Fan kWh	OA air flow CFM	Discharge Air Temp	MAT Air Temp	Heat Pipe Air Temp DT °F	MAT Air Temp w/ Hpipe	Space Temp setpoint	Total Cooling BTU/Hr	Total Cooling kWh/year	Total Cooling Demand Tons	Total Heating BTU/Hr	Run Fraction	Existing Heating CCF/year
-15 -11 / -12.6	-12.5	0.0		0	8,400	6.438	-	8,400	75.0°	-12.5°	0.0°	-12.5°	72°				664,000	100%	-
-10 -6 /-7.1	-7.5	0.0		0	8,400	6.438	-	8,400	75.0°	-7.5°	0.0°	-7.5°	72°				664,000	100%	-
-5 -1 /-2.9	-2.5	0.0		0	8,400	6.438	-	8,400	75.0°	-2.5°	0.0°	-2.5°	72°				664,000	100%	-
0-4/1	2.5	0.0		2	8,400	6.438	13	8,400	75.0°	2.5°	0.0°	2.5°	72°				657,720	99%	16.25
5-9/6	7.5	2.9		5	8,400	6.438	32	8,400	75.0°	7.5°	0.0°	7.5°	72°				612,360	92%	35.22
10-14/11	12.5	4.2		77	8,400	6.438	496	8,400	75.0°	12.5°	0.0°	12.5°	72°				567,000	85%	464.94
15-19/15	17.5	5.7		270	8,400	6.438	1,738	8,400	75.0°	17.5°	0.0°	17.5°	72°				521,640	79%	1,379.91
20-24/20	22.5	7.3		452	8,400	6.438	2,910	8,400	75.0°	22.5°	0.0°	22.5°	72°				476,280	72%	1,925.78
25-29/25	27.5	9.0		411	8,400	6.438	2,646	8,400	75.0°	27.5°	0.0°	27.5°	72°				430,920	65%	1,433.44
30-34/30	32.5	11.1		897	8,400	6.438	5,775	8,400	75.0°	32.5°	0.0°	32.5°	72°				385,560	58%	2,504.50
35-39/34	37.5	12.8		808	8,400	6.438	5,202	8,400	75.0°	37.5°	0.0°	37.5°	72°				340,200	51%	1,756.40
40-44/38	42.5	15.1		722	8,400	6.438	4,648	8,400	75.0°	42.5°	0.0°	42.5°	72°		-	-	294,840	44%	1,178.84
45-49/42	47.5	17.0		512	8,400	6.438	3,296	8,400	75.0°	47.5°	0.0°	47.5°	72°		-	-	249,480	35%	557.55
50-54/47	52.5	19.7	21.8	659	8,400	6.438	4,243	8,400	75.0°	52.5°	0.0°	52.5°	72°				204,120	15%	251.64
55-59/52	57.5	22.9	23.0	829	8,400	6.438	5,337	8,400	54.0°	57.5°	0.0°	57.5°	72°	31,752	263	2.65		13%	-
60-64/56	62.5	25.7	24.2	1010	8,400	6.438	6,502	8,400	54.0°	62.5°	0.0°	62.5°	72°	120,280	4,604	10.02		48%	-
65-69/60	67.5	28.7	25.5	812	8,400	6.438	5,228	8,400	54.0°	67.5°	0.0°	67.5°	72°	233,680	13,971	19.47		93%	-
70-74/63	72.5	31.0	26.7	470	8,400	6.438	3,026	8,400	54.0°	72.5°	0.0°	72.5°	72°	320,620	15,223	26.72		128%	-
75-79/66	77.5	32.4	27.9	436	8,400	6.438	2,807	8,400	54.0°	77.5°	0.0°	77.5°	72°	373,540	19,169	31.13		149%	-
80-84/69	82.5	33.8	29.1	265	8,400	6.438	1,706	8,400	54.0°	82.5°	0.0°	82.5°	72°	426,460	15,186	35.54		170%	-
85-89/72	87.5	36.5	30.3	106	8,400	6.438	682	8,400	54.0°	87.5°	0.0°	87.5°	72°	528,520	9,330	44.04		210%	-
90-94/73	92.5	39.2	31.6	17	8,400	6.438	109	8,400	54.0°	92.5°	0.0°	92.5°	72°	630,580	2,130	52.55		251%	-
				8,760.00			56,397								79,876	52.55			11,504

CONVERSION FACTORS				Design Conditions		
	119%	Sensible	/latent	Supply CFM	8,400	
FANHP (F.L.)	**7.72**	HP@	8,400	Total Cooling	251,250	664,000
RAFHP (F.L.)	-	HP@	0	Sensible Cooling	299,376	
FMEFF	**90%**	Percent		Air Side TD	33.00	
CFMREF	**8,400**	CFM		Supply HP	10.00	
DREFF	**97%**	Percent	(@F.L.)	T.S.P.	3.5	
MINVOL	**3,360**	CFM	CFM	Supply Fan Eff	65%	
Conv. Fact.	6,344	60	0.24	Return CFM	-	
Off Coil Conditions	54	22.52	28	Return T.S.P.		
Gas (BTU/CCF):	102,800	Heat Pipe Eff:	-	Return Fan HP	-	
kW/ton=	0.95			Return Fan Eff	60%	

Proposed Operation

Bin DB temp/ WetBulb	Average Temp	enthapy OA btu/lb	enthapy Mixed Air btu/lb	Bin hrs	SA air flow CFM	Fan kW	Fan kWh	OA air flow CFM	Discharge Air Temp	MAT Air Temp	Heat Pipe Air Temp DT °F	MAT Air Temp w/ Hpipe	Space Temp setpoint	Total Cooling BTU/Hr	Total Cooling kWh/year	Total Cooling Demand Tons	Total Heating BTU/Hr	Run Fraction	Proposed Heating CCF/year
-15 -11 / -12.6	-12.5	0.0		0	8,400	6.438	-	8,400	75.0°	-12.5°	0.0°	-12.5°	72°				664,000	100%	-
-10 -6 /-7.1	-7.5	0.0		0	8,400	6.438	-	8,400	75.0°	-7.5°	0.0°	-7.5°	72°				664,000	100%	-
-5 -1 /-2.9	-2.5	0.0		0	8,400	6.438	-	8,400	75.0°	-2.5°	0.0°	-2.5°	72°				664,000	100%	-
0-4/1	2.5	0.0		2	8,400	6.438	13	8,400	75.0°	2.5°	0.0°	2.5°	72°				657,720	99%	16.25
5-9/6	7.5	2.9		4	8,400	6.438	26	8,400	74.0°	7.5°	0.0°	7.5°	72°				603,288	92%	27.75
10-14/11	12.5	4.2		53	8,400	6.438	341	8,400	73.0°	12.5°	0.0°	12.5°	72°				548,856	85%	309.79
15-19/15	17.5	5.7		210	8,400	6.438	1,352	8,400	72.0°	17.5°	0.0°	17.5°	72°				494,424	79%	1,017.26
20-24/20	22.5	7.3		370	8,400	6.438	2,382	8,400	71.0°	22.5°	0.0°	22.5°	72°				439,992	72%	1,456.31
25-29/25	27.5	9.0		337	8,400	6.438	2,170	8,400	70.0°	27.5°	0.0°	27.5°	72°				385,560	65%	1,051.63
30-34/30	32.5	11.1		719	8,400	6.438	4,629	8,400	69.0°	32.5°	0.0°	32.5°	72°				331,128	58%	1,724.09
35-39/34	37.5	12.8		662	8,400	6.438	4,262	8,400	68.0°	37.5°	0.0°	37.5°	72°				276,696	51%	1,170.41
40-44/38	42.5	15.1		577	8,400	6.438	3,715	8,400	67.0°	42.5°	0.0°	42.5°	72°				222,264	44%	710.19
45-49/42	47.5	17.0		426	8,400	6.438	2,743	8,400	66.0°	47.5°	0.0°	47.5°	72°				167,832	35%	312.08
50-54/47	52.5	19.7	21.8	531	8,400	6.438	3,419	8,400	65.0°	52.5°	0.0°	52.5°	72°		-	-	113,400	15%	112.64
55-59/52	57.5	22.9	23.0	642	8,400	6.438	4,133	8,400	54.0°	57.5°	0.0°	57.5°	72°	31,752	204	2.65		13%	-
60-64/56	62.5	25.7	24.2	827	8,400	6.438	5,324	8,400	54.0°	62.5°	0.0°	62.5°	72°	120,280	3,770	10.02		48%	-
65-69/60	67.5	28.7	25.5	682	8,400	6.438	4,391	8,400	54.0°	67.5°	0.0°	67.5°	72°	233,680	11,734	19.47		93%	-
70-74/63	72.5	31.0	26.7	448	8,400	6.438	2,884	8,400	54.0°	72.5°	0.0°	72.5°	72°	320,620	14,511	26.72		128%	-
75-79/66	77.5	32.4	27.9	422	8,400	6.438	2,717	8,400	54.0°	77.5°	0.0°	77.5°	72°	373,540	18,553	31.13		149%	-
80-84/69	82.5	33.8	29.1	265	8,400	6.438	1,706	8,400	54.0°	82.5°	0.0°	82.5°	72°	426,460	15,186	35.54		170%	-
85-89/72	87.5	36.5	30.3	106	8,400	6.438	682	8,400	54.0°	87.5°	0.0°	87.5°	72°	528,520	9,330	44.04		210%	-
90-94/73	92.5	39.2	31.6	17	8,400	6.438	109	8,400	54.0°	92.5°	0.0°	92.5°	72°	630,580	2,130	52.55		251%	
				7,300.00			46,997								75,418	52.55			7,908

Title	**BAS Upgrades & Modifications**
ECM#	**7**
Project:	**SCI Houtzdale**
Site:	**SCI Houtzdale**

CONVERSION FACTORS				Design Conditions		
SLR	**31%**	Sensible	/latent	Supply CFM	4,820	
FANHP (F.L.)	**5.07**	HP@	4,820	Total Cooling	570,000	382,000
RAFHP (F.L.)	-	HP@	0	Sensible Cooling	179,073	
FMEFF	**90%**	Percent		Air Side TD	34.40	
CFMREF	**4,820**	CFM		Supply HP	7.5	
DREFF	**97%**	Percent	(@F.L.)	T.S.P.	4.0	
MINVOL	**1,928**	CFM	CFM	Supply Fan Eff	60%	
Conv. Fact.	6,344	60	0.24	Return CFM	-	
Off Coil Conditions	53	21.69		Return T.S.P.		
Gas (BTU/CCF):	102,800	Heat Pipe Eff:	-	Return Fan HP	-	
kW/ton=	0.95			Return Fan Eff	60%	

Existing Operation

Bin DB temp/ WetBulb	Average Temp	enthapy OA btu/lb	enthapy Mixed Air btu/lb	Bin hrs	SA air flow CFM	Fan kW	Fan kWh	OA air flow CFM	Discharge Air Temp	MAT Air Temp	Heat Pipe Air Temp DT °F	MAT Air Temp w/ Hpipe	Space Temp setpoint	Total Cooling BTU/Hr	Total Cooling kW/year	Total Cooling Demand Tons	Total Heating BTU/Hr	Total Reheat BTU/Hr	Run Fraction	Existing Heating CCF/year
-15 -11 / -12.6	-12.5	0.0		0	4,820	4.222	-	4,820	75.0°	-12.5°	0.0°	-12.5°	72°				382,000		100%	-
-10 -6 /-7.1	-7.5	0.0		0	4,820	4.222	-	4,820	75.0°	-7.5°	0.0°	-7.5°	72°				382,000		100%	-
-5 -1 /-2.9	-2.5	0.0		0	4,820	4.222	-	4,820	75.0°	-2.5°	0.0°	-2.5°	72°				382,000		100%	-
0-4/1	2.5	0.0		2	4,820	4.222	8	4,820	75.0°	2.5°	0.0°	2.5°	72°				377,406		99%	9.30
5-9/6	7.5	2.9		5	4,820	4.222	21	4,820	75.0°	7.5°	0.0°	7.5°	72°				351,378		92%	20.15
10-14/11	12.5	4.2		77	4,820	4.222	325	4,820	75.0°	12.5°	0.0°	12.5°	72°				325,350		85%	266.10
15-19/15	17.5	5.7		270	4,820	4.222	1,140	4,820	75.0°	17.5°	0.0°	17.5°	72°				299,322		78%	789.75
20-24/20	22.5	7.3		452	4,820	4.222	1,908	4,820	75.0°	22.5°	0.0°	22.5°	72°				273,294		72%	1,102.17
25-29/25	27.5	9.0		411	4,820	4.222	1,735	4,820	75.0°	27.5°	0.0°	27.5°	72°				247,266		65%	820.39
30-34/30	32.5	11.1		897	4,820	4.222	3,787	4,820	75.0°	32.5°	0.0°	32.5°	72°				221,238		58%	1,433.38
35-39/34	37.5	12.8		808	4,820	4.222	3,411	4,820	75.0°	37.5°	0.0°	37.5°	72°				195,210		51%	1,005.23
40-44/38	42.5	15.1		722	4,820	4.222	3,048	4,820	75.0°	42.5°	0.0°	42.5°	72°		-	-	169,182		44%	674.67
45-49/42	47.5	17.0		512	4,820	4.222	2,162	4,820	75.0°	47.5°	0.0°	47.5°	72°		-	-	143,154		35%	319.93
50-54/47	52.5	19.7	21.8	659	4,820	4.222	2,782	4,820	52.6°	52.5°	0.0°	52.5°	72°		-	-			15%	-
55-59/52	57.5	22.9	23.0	829	4,820	4.222	3,500	4,820	52.6°	57.5°	0.0°	57.5°	72°	26,223	79	2.19	-		5%	-
60-64/56	62.5	25.7	24.2	1010	4,820	4.222	4,264	4,820	52.6°	62.5°	0.0°	62.5°	72°	86,955	1,061	7.25	-		15%	-
65-69/60	67.5	28.7	25.5	812	4,820	4.222	3,428	4,820	52.6°	67.5°	0.0°	67.5°	72°	152,025	2,606	12.67			27%	-
70-74/63	72.5	31.0	26.7	470	4,820	4.222	1,984	4,820	52.6°	72.5°	0.0°	72.5°	72°	201,912	2,661	16.83			35%	-
75-79/66	77.5	32.4	27.9	436	4,820	4.222	1,841	4,820	52.6°	77.5°	0.0°	77.5°	72°	232,278	3,267	19.36			41%	-
80-84/69	82.5	33.8	29.1	265	4,820	4.222	1,119	4,820	52.6°	82.5°	0.0°	82.5°	72°	262,644	2,539	21.89			46%	-
85-89/72	87.5	36.5	30.3	106	4,820	4.222	448	4,820	52.6°	87.5°	0.0°	87.5°	72°	321,207	1,519	26.77			56%	-
90-94/73	92.5	39.2	31.6	17	4,820	4.222	72	4,820	52.6°	92.5°	0.0°	92.5°	72°	379,770	341	31.65			67%	
				8,760.00			36,984								14,073	31.65				6,441

CONVERSION FACTORS				Design Conditions		
	31%	Sensible	/latent	Supply CFM	4,820	
FANHP (F.L.)	**5.07**	HP@	4,820	Total Cooling	570,000	382,000
RAFHP (F.L.)	-	HP@	0	Sensible Cooling	179,073	
FMEFF	**90%**	Percent		Air Side TD	34.40	
CFMREF	**4,820**	CFM		Supply HP	7.50	
DREFF	**97%**	Percent	(@F.L.)	T.S.P.	4.0	
MINVOL	**1,928**	CFM	CFM	Supply Fan Eff	65%	
Conv. Fact.	6,344	60	0.24	Return CFM	-	
Off Coil Conditions	53	21.69	28	Return T.S.P.		
Gas (BTU/CCF):	102,800	Heat Pipe Eff:	-	Return Fan HP	-	
kW/ton=	0.95			Return Fan Eff	60%	

Proposed Operation

Bin DB temp/ WetBulb	Average Temp	enthapy OA btu/lb	enthapy Mixed Air btu/lb	Bin hrs	SA air flow CFM	Fan kW	Fan kWh	OA air flow CFM	Discharge Air Temp	MAT Air Temp	Heat Pipe Air Temp DT °F	MAT Air Temp w/ Hpipe	Space Temp setpoint	Total Cooling BTU/Hr	Total Cooling kW/year	Total Cooling Demand Tons	Total Heating BTU/Hr	Total Reheat BTU/Hr	Run Fraction	Proposed Heating CCF/year
-15 -11 / -12.6	-12.5	0.0		0	4,820	4.222	-	4,820	75.0°	-12.5°	0.0°	-12.5°	72°				382,000		100%	-
-10 -6 /-7.1	-7.5	0.0		0	4,820	4.222	-	4,820	75.0°	-7.5°	0.0°	-7.5°	72°				382,000		100%	-
-5 -1 /-2.9	-2.5	0.0		0	4,820	4.222	-	4,820	75.0°	-2.5°	0.0°	-2.5°	72°				382,000		100%	-
0-4/1	2.5	0.0		2	4,820	4.222	8	4,820	75.0°	2.5°	0.0°	2.5°	72°				377,406		99%	9.30
5-9/6	7.5	2.9		4	4,820	4.222	17	4,820	74.0°	7.5°	0.0°	7.5°	72°				346,172		92%	15.88
10-14/11	12.5	4.2		53	4,820	4.222	224	4,820	73.0°	12.5°	0.0°	12.5°	72°				314,939		85%	177.30
15-19/15	17.5	5.7		210	4,820	4.222	887	4,820	72.0°	17.5°	0.0°	17.5°	72°				283,705		78%	582.20
20-24/20	22.5	7.3		370	4,820	4.222	1,562	4,820	71.0°	22.5°	0.0°	22.5°	72°				252,472		72%	833.48
25-29/25	27.5	9.0		337	4,820	4.222	1,423	4,820	70.0°	27.5°	0.0°	27.5°	72°				221,238		65%	601.87
30-34/30	32.5	11.1		719	4,820	4.222	3,036	4,820	69.0°	32.5°	0.0°	32.5°	72°				190,004		58%	986.74
35-39/34	37.5	12.8		662	4,820	4.222	2,795	4,820	68.0°	37.5°	0.0°	37.5°	72°				158,771		51%	669.85
40-44/38	42.5	15.1		577	4,820	4.222	2,436	4,820	67.0°	42.5°	0.0°	42.5°	72°				127,537		44%	406.46
45-49/42	47.5	17.0		426	4,820	4.222	1,799	4,820	66.0°	47.5°	0.0°	47.5°	72°				96,304		35%	179.07
50-54/47	52.5	19.7	21.8	531	4,820	4.222	2,242	4,820.00	52.6°	52.5°	0.0°	52.5°	72°		-	-			15%	-
55-59/52	57.5	22.9	23.0	642	4,820	4.222	2,710	4,820.00	52.6°	57.5°	0.0°	57.5°	72°	26,223	61	2.19			5%	-
60-64/56	62.5	25.7	24.2	827	4,820	4.222	3,492	4,820.00	52.6°	62.5°	0.0°	62.5°	72°	86,955	868	7.25			15%	-
65-69/60	67.5	28.7	25.5	682	4,820	4.222	2,879	4,820	52.6°	67.5°	0.0°	67.5°	72°	152,025	2,189	12.67			27%	-
70-74/63	72.5	31.0	26.7	448	4,820	4.222	1,891	4,820	52.6°	72.5°	0.0°	72.5°	72°	201,912	2,537	16.83			35%	-
75-79/66	77.5	32.4	27.9	422	4,820	4.222	1,782	4,820	52.6°	77.5°	0.0°	77.5°	72°	232,278	3,162	19.36			41%	-
80-84/69	82.5	33.8	29.1	265	4,820	4.222	1,119	4,820	52.6°	82.5°	0.0°	82.5°	72°	262,644	2,539	21.89			46%	-
85-89/72	87.5	36.5	30.3	106	4,820	4.222	448	4,820	52.6°	87.5°	0.0°	87.5°	72°	321,207	1,519	26.77			56%	-
90-94/73	92.5	39.2	31.6	17	4,820	4.222	72	4,820	52.6°	92.5°	0.0°	92.5°	72°	379,770	341	31.65			67%	
				7,300.00			30,820								13,216	31.65				4,462

Title	**BAS Upgrades & Modifications**
ECM#	**7**
Project:	**SCI Houtzdale**
Site:	**SCI Houtzdale**

CONVERSION FACTORS				Design Conditions		
SLR	**46%**	Sensible	/latent	Supply CFM	8,400	
FANHP (F.L.)	**7.72**	HP@	8,400	Total Cooling	506,250	665,000
RAFHP (F.L.)	-	HP@	0	Sensible Cooling	230,429	
FMEFF	**90%**	Percent		Air Side TD	25.40	
CFMREF	**8,400**	CFM		Supply HP	10.0	
DREFF	**97%**	Percent	(@F.L.)	T.S.P.	3.5	
MINVOL	**3,360**	CFM	CFM	Supply Fan Eff	60%	
Conv. Fact.	6,344	60	0.24	Return CFM	-	
Off Coil Conditions	52	21.29		Return T.S.P.		
Gas (BTU/CCF):	102,800	Heat Pipe Eff.	-	Return Fan HP	-	
kW/ton=	0.95			Return Fan Eff	60%	

Existing Operation

Bin DB temp/ WetBulb	Average Temp	enthapy OA btu/lb	enthapy Mixed Air btu/lb	Bin hrs	SA air flow CFM	Fan kW	Fan kWh	OA air flow CFM	Discharge Air Temp	MAT Air Temp	Heat Pipe Air Temp DT °F	MAT Air Temp w/ Hpipe	Space Temp setpoint	Total Cooling BTU/Hr	Total Cooling kW/Hyear	Total Cooling Demand Tons	Total Heating BTU/Hr	Total Reheat BTU/Hr	Run Fraction	Existing Heating CCF/year
-15 -11 / -12.6	-12.5	0.0		0	8,400	6.438	-	8,400	75.0°	-12.5°	0.0°	-12.5°	72°				665,000		100%	-
-10 -6 /-7.1	-7.5	0.0		0	8,400	6.438	-	8,400	75.0°	-7.5°	0.0°	-7.5°	72°				665,000		100%	-
-5 -1 /-2.9	-2.5	0.0		0	8,400	6.438	-	8,400	75.0°	-2.5°	0.0°	-2.5°	72°				665,000		100%	-
0-4/1	2.5	0.0		2	8,400	6.438	13	8,400	75.0°	2.5°	0.0°	2.5°	72°				657,720		99%	16.23
5-9/6	7.5	2.9		5	8,400	6.438	32	8,400	75.0°	7.5°	0.0°	7.5°	72°				612,360		92%	35.16
10-14/11	12.5	4.2		77	8,400	6.438	496	8,400	75.0°	12.5°	0.0°	12.5°	72°				567,000		85%	464.25
15-19/15	17.5	5.7		270	8,400	6.438	1,738	8,400	75.0°	17.5°	0.0°	17.5°	72°				521,640		78%	1,377.83
20-24/20	22.5	7.3		452	8,400	6.438	2,910	8,400	75.0°	22.5°	0.0°	22.5°	72°				476,280		72%	1,922.89
25-29/25	27.5	9.0		411	8,400	6.438	2,646	8,400	75.0°	27.5°	0.0°	27.5°	72°				430,920		65%	1,431.28
30-34/30	32.5	11.1		897	8,400	6.438	5,775	8,400	75.0°	32.5°	0.0°	32.5°	72°				385,560		58%	2,500.73
35-39/34	37.5	12.8		808	8,400	6.438	5,202	8,400	75.0°	37.5°	0.0°	37.5°	72°				340,200		51%	1,753.76
40-44/38	42.5	15.1		722	8,400	6.438	4,648	8,400	75.0°	42.5°	0.0°	42.5°	72°		-	-	294,840		44%	1,177.07
45-49/42	47.5	17.0		512	8,400	6.438	3,296	8,400	75.0°	47.5°	0.0°	47.5°	72°		-	-	249,480		35%	557.55
50-54/47	52.5	19.7	21.8	659	8,400	6.438	4,243	8,400	51.9°	52.5°	0.0°	52.5°	72°		-	-	-		15%	-
55-59/52	57.5	22.9	23.0	829	8,400	6.438	5,337	8,400	51.9°	57.5°	0.0°	57.5°	72°	61,047	483	5.09	-		12%	-
60-64/56	62.5	25.7	24.2	1010	8,400	6.438	6,502	8,400	51.9°	62.5°	0.0°	62.5°	72°	166,887	4,399	13.91	-		33%	-
65-69/60	67.5	28.7	25.5	812	8,400	6.438	5,228	8,400	51.9°	67.5°	0.0°	67.5°	72°	280,287	9,976	23.36			55%	-
70-74/63	72.5	31.0	26.7	470	8,400	6.438	3,026	8,400	51.9°	72.5°	0.0°	72.5°	72°	367,227	9,912	30.60			73%	-
75-79/66	77.5	32.4	27.9	436	8,400	6.438	2,807	8,400	51.9°	77.5°	0.0°	77.5°	72°	420,147	12,036	35.01			83%	-
80-84/69	82.5	33.8	29.1	265	8,400	6.438	1,706	8,400	51.9°	82.5°	0.0°	82.5°	72°	473,067	9,274	39.42			93%	-
85-89/72	87.5	36.5	30.3	106	8,400	6.438	682	8,400	51.9°	87.5°	0.0°	87.5°	72°	575,127	5,483	47.93			114%	-
90-94/73	92.5	39.2	31.6	17	8,400	6.438	109	8,400	51.9°	92.5°	0.0°	92.5°	72°	677,187	1,219	56.43			134%	-
				8,760.00			56,397								52,781	56.43				11,237

CONVERSION FACTORS				Design Conditions		
	46%	Sensible	/latent	Supply CFM	8,400	
FANHP (F.L.)	**7.72**	HP@	8,400	Total Cooling	506,250	665,000
RAFHP (F.L.)	-	HP@	0	Sensible Cooling	230,429	
FMEFF	**90%**	Percent		Air Side TD	25.40	
CFMREF	**8,400**	CFM		Supply HP	10.00	
DREFF	**97%**	Percent	(@F.L.)	T.S.P.	3.5	
MINVOL	**3,360**	CFM	CFM	Supply Fan Eff	60%	
Conv. Fact.	6,344	60	0.24	Return CFM	-	
Off Coil Conditions	52	21.29	28	Return T.S.P.	-	
Gas (BTU/CCF):	102,800	Heat Pipe Eff.	-	Return Fan HP	-	
kW/ton=	0.95			Return Fan Eff	60%	

Proposed Operation

Bin DB temp/ WetBulb	Average Temp	enthapy OA btu/lb	enthapy Mixed Air btu/lb	Bin hrs	SA air flow CFM	Fan kW	Fan kWh	OA air flow CFM	Discharge Air Temp	MAT Air Temp	Heat Pipe Air Temp DT °F	MAT Air Temp w/ Hpipe	Space Temp setpoint	Total Cooling BTU/Hr	Total Cooling kW/Hyear	Total Cooling Demand Tons	Total Heating BTU/Hr	Total Reheat BTU/Hr	Run Fraction	Proposed Heating CCF/year
-15 -11 / -12.6	-12.5	0.0		0	8,400	6.438	-	8,400	75.0°	-12.5°	0.0°	-12.5°	72°				665,000		100%	-
-10 -6 /-7.1	-7.5	0.0		0	8,400	6.438	-	8,400	75.0°	-7.5°	0.0°	-7.5°	72°				665,000		100%	-
-5 -1 /-2.9	-2.5	0.0		0	8,400	6.438	-	8,400	75.0°	-2.5°	0.0°	-2.5°	72°				665,000		100%	-
0-4/1	2.5	0.0		2	8,400	6.438	13	8,400	75.0°	2.5°	0.0°	2.5°	72°				657,720		99%	16.23
5-9/6	7.5	2.9		4	8,400	6.438	26	8,400	74.0°	7.5°	0.0°	7.5°	72°				603,288		92%	27.71
10-14/11	12.5	4.2		53	8,400	6.438	341	8,400	73.0°	12.5°	0.0°	12.5°	72°				548,856		85%	309.32
15-19/15	17.5	5.7		210	8,400	6.438	1,352	8,400	72.0°	17.5°	0.0°	17.5°	72°				494,424		78%	1,015.73
20-24/20	22.5	7.3		370	8,400	6.438	2,382	8,400	71.0°	22.5°	0.0°	22.5°	72°				439,992		72%	1,454.12
25-29/25	27.5	9.0		337	8,400	6.438	2,170	8,400	70.0°	27.5°	0.0°	27.5°	72°				385,560		65%	1,050.05
30-34/30	32.5	11.1		719	8,400	6.438	4,629	8,400	69.0°	32.5°	0.0°	32.5°	72°				331,128		58%	1,721.50
35-39/34	37.5	12.8		662	8,400	6.438	4,262	8,400	68.0°	37.5°	0.0°	37.5°	72°				276,696		51%	1,168.65
40-44/38	42.5	15.1		577	8,400	6.438	3,715	8,400	67.0°	42.5°	0.0°	42.5°	72°				222,264		44%	709.12
45-49/42	47.5	17.0		426	8,400	6.438	2,743	8,400	66.0°	47.5°	0.0°	47.5°	72°				167,832		35%	312.08
50-54/47	52.5	19.7	21.8	531	8,400	6.438	3,419	8,400.00	65.0°	52.5°	0.0°	52.5°	72°		-	-			15%	-
55-59/52	57.5	22.9	23.0	642	8,400	6.438	4,133	8,400.00	64.0°	57.5°	0.0°	57.5°	72°	61,047	374	5.09			12%	-
60-64/56	62.5	25.7	24.2	827	8,400	6.438	5,324	8,400.00	51.9°	62.5°	0.0°	62.5°	72°	166,887	3,602	13.91			33%	-
65-69/60	67.5	28.7	25.5	682	8,400	6.438	4,391	8,400	51.9°	67.5°	0.0°	67.5°	72°	280,287	8,379	23.36			55%	-
70-74/63	72.5	31.0	26.7	448	8,400	6.438	2,884	8,400	51.9°	72.5°	0.0°	72.5°	72°	367,227	9,448	30.60			73%	-
75-79/66	77.5	32.4	27.9	422	8,400	6.438	2,717	8,400	51.9°	77.5°	0.0°	77.5°	72°	420,147	11,649	35.01			83%	-
80-84/69	82.5	33.8	29.1	265	8,400	6.438	1,706	8,400	51.9°	82.5°	0.0°	82.5°	72°	473,067	9,274	39.42			93%	-
85-89/72	87.5	36.5	30.3	106	8,400	6.438	682	8,400	51.9°	87.5°	0.0°	87.5°	72°	575,127	5,483	47.93			114%	-
90-94/73	92.5	39.2	31.6	17	8,400	6.438	109	8,400	51.9°	92.5°	0.0°	92.5°	72°	677,187	1,219	56.43			134%	-
				7,300.00			46,997								49,427	56.43				7,785

Title	**BAS Upgrades & Modifications**
ECM#	**7**
Project:	**SCI Houtzdale**
Site:	**SCI Houtzdale**

CONVERSION FACTORS				Design Conditions	
SLR	**96%**	Sensible	/latent	Supply CFM	6,150
FANHP (F.L.)	**5.65**	HP@	6,150	Total Cooling	175,500 487,000
RAFHP (F.L.)	-	HP@	0	Sensible Cooling	168,043
FMEFF	**90%**	Percent		Air Side TD	25.30
CFMREF	**6,150**	CFM		Supply HP	7.5
DREFF	**97%**	Percent	(@F.L.)	T.S.P.	3.5
MINVOL	**2,460**	CFM	CFM	Supply Fan Eff	60%
Conv. Fact.	6,344	60	0.24	Return CFM	-
Off Coil Conditions	55	23.00		Return T.S.P.	1.5
Gas (BTU/CCF):	102,800	Heat Pipe Eff.	-	Return Fan HP	5.0
kW/ton=	0.95			Return Fan Eff	60%

Existing Operation

Bin DB temp/ WetBulb	Average Temp	enthapy OA btu/lb	enthapy Mixed Air btu/lb	Bin hrs	SA air flow CFM	Fan kW	Fan kWh	OA air flow CFM	Discharge Air Temp	MAT Air Temp	Heat Pipe Air Temp DT °F	MAT Air Temp w/ Hpipe	Space Temp setpoint	Total Cooling BTU/Hr	Total Cooling kW/h/year	Total Cooling Demand Tons	Total Heating BTU/Hr	Total Reheat BTU/Hr	Run Fraction	Existing Heating CCF/year
-15 -11 / -12.6	-12.5	0.0		0	6,150	4.714	-	6,150	75.0°	-12.5°	0.0°	-12.5°	72°				487,000		100%	-
-10 -6 /-7.1	-7.5	0.0		0	6,150	4.714	-	6,150	75.0°	-7.5°			72°				487,000		100%	-
-5 -1 /-2.9	-2.5	0.0		0	6,150	4.714	-	6,150	75.0°	-2.5°			72°				487,000		100%	-
0-4/1	2.5	0.0		2	6,150	4.714	9	6,150	75.0°	2.5°	0.0°	2.5°	72°				481,545		99%	11.88
5-9/6	7.5	2.9		5	6,150	4.714	24	6,150	75.0°	7.5°	0.0°	7.5°	72°				448,335		92%	25.74
10-14/11	12.5	4.2		77	6,150	4.714	363	6,150	75.0°	12.5°	0.0°	12.5°	72°				415,125		85%	339.81
15-19/15	17.5	5.7		270	6,150	4.714	1,273	6,150	75.0°	17.5°	0.0°	17.5°	72°				381,915		78%	1,008.51
20-24/20	22.5	7.3		452	6,150	4.714	2,131	6,150	75.0°	22.5°	0.0°	22.5°	72°				348,705		72%	1,407.47
25-29/25	27.5	9.0		411	6,150	4.714	1,937	6,150	75.0°	27.5°	0.0°	27.5°	72°				315,495		65%	1,047.64
30-34/30	32.5	11.1		897	6,150	4.714	4,228	6,150	75.0°	32.5°	0.0°	32.5°	72°				282,285		58%	1,830.42
35-39/34	37.5	12.8		808	6,150	4.714	3,809	6,150	75.0°	37.5°	0.0°	37.5°	72°				249,075		51%	1,283.67
40-44/38	42.5	15.1		722	6,150	4.714	3,403	6,150	75.0°	42.5°	0.0°	42.5°	72°		-	-	215,865		44%	861.56
45-49/42	47.5	17.0		512	6,150	4.714	2,413	6,150	75.0°	47.5°	0.0°	47.5°	72°		-	-	182,655		35%	408.21
50-54/47	52.5	19.7	21.8	659	6,150	4.714	3,106	6,150	54.8°	52.5°	0.0°	52.5°	72°		-	-	15,277		15%	18.83
55-59/52	57.5	22.9	23.0	829	6,150	4.714	3,908	6,150	54.8°	57.5°	0.0°	57.5°	72°	17,933	120	1.49	-		10%	-
60-64/56	62.5	25.7	24.2	1010	6,150	4.714	4,761	6,150	54.8°	62.5°	0.0°	62.5°	72°	51,143	1,192	4.26	-		29%	-
65-69/60	67.5	28.7	25.5	812	6,150	4.714	3,827	6,150	54.8°	67.5°	0.0°	67.5°	72°	84,353	2,606	7.03			48%	-
70-74/63	72.5	31.0	26.7	470	6,150	4.714	2,215	6,150	54.8°	72.5°	0.0°	72.5°	72°	117,563	2,930	9.80			67%	-
75-79/66	77.5	32.4	27.9	436	6,150	4.714	2,055	6,150	54.8°	77.5°	0.0°	77.5°	72°	150,773	4,471	12.56			86%	-
80-84/69	82.5	33.8	29.1	265	6,150	4.714	1,249	6,150	54.8°	82.5°	0.0°	82.5°	72°	183,983	4,046	15.33			105%	-
85-89/72	87.5	36.5	30.3	106	6,150	4.714	500	6,150	54.8°	87.5°	0.0°	87.5°	72°	217,193	2,256	18.10			124%	-
90-94/73	92.5	39.2	31.6	17	6,150	4.714	80	6,150	54.8°	92.5°	0.0°	92.5°	72°	250,403	481	20.87			143%	-
				8,760.00			41,290								18,102	20.87				8,244

CONVERSION FACTORS				Design Conditions	
	96%	Sensible	/latent	Supply CFM	6,150
FANHP (F.L.)	**5.65**	HP@	6,150	Total Cooling	175,500 487,000
RAFHP (F.L.)	-	HP@	0	Sensible Cooling	168,043
FMEFF	**90%**	Percent		Air Side TD	25.30
CFMREF	**6,150**	CFM		Supply HP	7.50
DREFF	**97%**	Percent	(@F.L.)	T.S.P.	3.5
MINVOL	**2,460**	CFM	CFM	Supply Fan Eff	65%
Conv. Fact.	6,344	60	0.24	Return CFM	-
Off Coil Conditions	55	23.00	28	Return T.S.P.	
Gas (BTU/CCF):	102,800	Heat Pipe Eff.	-	Return Fan HP	-
kW/ton=	0.95			Return Fan Eff	60%

Proposed Operation

Bin DB temp/ WetBulb	Average Temp	enthapy OA btu/lb	enthapy Mixed Air btu/lb	Bin hrs	SA air flow CFM	Fan kW	Fan kWh	OA air flow CFM	Discharge Air Temp	MAT Air Temp	Heat Pipe Air Temp DT °F	MAT Air Temp w/ Hpipe	Space Temp setpoint	Total Cooling BTU/Hr	Total Cooling kW/h/year	Total Cooling Demand Tons	Total Heating BTU/Hr	Total Reheat BTU/Hr	Run Fraction	Proposed Heating CCF/year
-15 -11 / -12.6	-12.5	0.0		0	6,150	4.714	-	6,150	75.0°	-12.5°	0.0°	-12.5°	72°				487,000		100%	-
-10 -6 /-7.1	-7.5	0.0		0	6,150	4.714	-	6,150	75.0°	-7.5°	0.0°	-7.5°	72°				487,000		100%	-
-5 -1 /-2.9	-2.5	0.0		0	6,150	4.714	-	6,150	75.0°	-2.5°	0.0°	-2.5°	72°				487,000		100%	-
0-4/1	2.5	0.0		2	6,150	4.714	9	6,150	75.0°	2.5°	0.0°	2.5°	72°				481,545		99%	11.88
5-9/6	7.5	2.9		4	6,150	4.714	19	6,150	74.0°	7.5°	0.0°	7.5°	72°				441,693		92%	20.28
10-14/11	12.5	4.2		53	6,150	4.714	250	6,150	73.0°	12.5°	0.0°	12.5°	72°				401,841		85%	226.41
15-19/15	17.5	5.7		210	6,150	4.714	990	6,150	72.0°	17.5°	0.0°	17.5°	72°				361,989		78%	743.47
20-24/20	22.5	7.3		370	6,150	4.714	1,744	6,150	71.0°	22.5°	0.0°	22.5°	72°				322,137		72%	1,064.35
25-29/25	27.5	9.0		337	6,150	4.714	1,588	6,150	70.0°	27.5°	0.0°	27.5°	72°				282,285		65%	768.59
30-34/30	32.5	11.1		719	6,150	4.714	3,389	6,150	69.0°	32.5°	0.0°	32.5°	72°				242,433		58%	1,260.06
35-39/34	37.5	12.8		662	6,150	4.714	3,120	6,150	68.0°	37.5°	0.0°	37.5°	72°				202,581		51%	855.40
40-44/38	42.5	15.1		577	6,150	4.714	2,720	6,150	67.0°	42.5°	0.0°	42.5°	72°				162,729		44%	519.05
45-49/42	47.5	17.0		426	6,150	4.714	2,008	6,150	66.0°	47.5°	0.0°	47.5°	72°				122,877		35%	228.49
50-54/47	52.5	19.7	21.8	531	6,150	4.714	2,503	6,150.00	54.8°	52.5°	0.0°	52.5°	72°		-	-	15,277		15%	15.17
55-59/52	57.5	22.9	23.0	642	6,150	4.714	3,026	6,150.00	54.8°	57.5°	0.0°	57.5°	72°	17,933	93	1.49			10%	-
60-64/56	62.5	25.7	24.2	827	6,150	4.714	3,898	6,150.00	54.8°	62.5°	0.0°	62.5°	72°	51,143	976	4.26			29%	-
65-69/60	67.5	28.7	25.5	682	6,150	4.714	3,215	6,150	54.8°	67.5°	0.0°	67.5°	72°	84,353	2,189	7.03			48%	-
70-74/63	72.5	31.0	26.7	448	6,150	4.714	2,112	6,150	54.8°	72.5°	0.0°	72.5°	72°	117,563	2,793	9.80			67%	-
75-79/66	77.5	32.4	27.9	422	6,150	4.714	1,989	6,150	54.8°	77.5°	0.0°	77.5°	72°	150,773	4,327	12.56			86%	-
80-84/69	82.5	33.8	29.1	265	6,150	4.714	1,249	6,150	54.8°	82.5°	0.0°	82.5°	72°	183,983	4,046	15.33			105%	-
85-89/72	87.5	36.5	30.3	106	6,150	4.714	500	6,150	54.8°	87.5°	0.0°	87.5°	72°	217,193	2,256	18.10			124%	-
90-94/73	92.5	39.2	31.6	17	6,150	4.714	80	6,150	54.8°	92.5°	0.0°	92.5°	72°	250,403	481	20.87			143%	-
				7,300.00			34,409								17,161	20.87				5,713

Title	**BAS Upgrades & Modifications**
ECM#	**7**
Project:	**SCI Houtzdale**
Site:	**SCI Houtzdale**

CONVERSION FACTORS				Design Conditions		
SLR	**116%**	Sensible	/latent	Supply CFM	5,200	
FANHP (F.L.)	**5.46**	HP@	5,200	Total Cooling	122,250	200,000
RAFHP (F.L.)	**0.76**	HP@	2,895	Sensible Cooling	142,085	
FMEFF	**90%**	Percent		Air Side TD	25.30	
CFMREF	**5,200**	CFM		Supply HP	7.5	
DREFF	**97%**	Percent	(@F.L.)	T.S.P.	4.0	
MINVOL	**2,080**	CFM	CFM	Supply Fan Eff	60%	
Conv. Fact.	6,344	60	0.24	Return CFM	2,895	
Off Coil Conditions	57	24.18		Return T.S.P.	1.0	
Gas (BTU/CCF):	102,800	Heat Pipe Eff	-	Return Fan HP	1.0	
kW/ton=	0.95			Return Fan Eff	60%	

Existing Operation

Bin DB temp/ WetBulb	Average Temp	enthapy OA btu/lb	enthapy Mixed Air btu/lb	Bin hrs	SA air flow CFM	Fan kW	Fan kWh	OA air flow CFM	Discharge Air Temp	MAT Air Temp	Heat Pipe Air Temp DT °F	MAT Air Temp w/ Hpipe	Space Temp setpoint	Total Cooling BTU/Hr	Total Cooling kW/h/year	Total Cooling Demand Tons	Total Heating BTU/Hr	Total Reheat BTU/Hr	Run Fraction	Existing Heating CCF/year
-15 -11 / -12.6	-12.5	0.0		0	5,200	5.223	-	2,305	75.0°	34.5°	0.0°	34.5°	72°				200,000		100%	-
-10 -6 /-7.1	-7.5	0.0		0	5,200	5.223	-	2,305	75.0°	36.8°	0.0°	36.8°	72°				200,000		100%	-
-5 -1 /-2.9	-2.5	0.0		0	5,200	5.223	-	2,305	75.0°	39.0°	0.0°	39.0°	72°				200,000		100%	-
0-4/1	2.5	0.0		2	5,200	5.223	10	2,305	75.0°	41.2°	0.0°	41.2°	72°				189,861		95%	4.50
5-9/6	7.5	2.9		5	5,200	5.223	26	2,305	75.0°	43.4°	0.0°	43.4°	72°				177,414		89%	9.81
10-14/11	12.5	4.2		77	4,940	5.055	389	2,190	75.0°	45.6°	0.0°	45.6°	72°				156,719		78%	117.93
15-19/15	17.5	5.7		270	4,680	4.877	1,317	2,075	75.0°	47.8°	0.0°	47.8°	72°				137,268		69%	317.24
20-24/20	22.5	7.3		452	4,420	4.700	2,124	1,959	75.0°	50.1°	0.0°	50.1°	72°				119,062		60%	399.55
25-29/25	27.5	9.0		411	4,160	4.518	1,857	1,844	75.0°	52.3°	0.0°	52.3°	72°				102,101		51%	267.17
30-34/30	32.5	11.1		897	3,900	4.333	3,886	1,729	75.0°	54.5°	0.0°	54.5°	72°				86,384		43%	417.39
35-39/34	37.5	12.8		808	3,640	4.142	3,347	1,614	75.0°	56.7°	0.0°	56.7°	72°				71,913		36%	260.56
40-44/38	42.5	15.1		722	3,380	3.947	2,850	1,498	75.0°	58.9°	0.0°	58.9°	72°		-	-	58,685		29%	155.05
45-49/42	47.5	17.0		512	3,120	3.747	1,919	1,383	75.0°	61.1°	0.0°	61.1°	72°		-	-	46,703		35%	104.37
50-54/47	52.5	19.7	24.5	659	3,120	3.747	2,470	1,383	56.7°	63.4°	0.0°	63.4°	72°	22,429	176	1.87	-		15%	-
55-59/52	57.5	22.9	25.0	829	3,380	3.947	3,272	1,498	56.7°	65.6°	0.0°	65.6°	72°	32,389	563	2.70	-		26%	-
60-64/56	62.5	25.7	25.5	1010	3,640	4.142	4,184	1,614	56.7°	67.8°	0.0°	67.8°	72°	43,593	1,243	3.63	-		36%	-
65-69/60	67.5	28.7	26.1	812	3,900	4.333	3,518	1,729	56.7°	70.0°	0.0°	70.0°	72°	56,042	1,651	4.67			46%	-
70-74/63	72.5	31.0	26.6	470	4,160	4.518	2,123	1,844	56.7°	72.2°	0.0°	72.2°	72°	69,736	1,480	5.81			57%	-
75-79/66	77.5	32.4	27.2	436	4,420	4.700	2,049	1,959	56.7°	74.4°	0.0°	74.4°	72°	84,674	2,024	7.06			69%	-
80-84/69	82.5	33.8	27.7	265	4,680	4.877	1,293	2,075	56.7°	76.7°	0.0°	76.7°	72°	100,857	1,746	8.40			83%	-
85-89/72	87.5	36.5	28.2	106	4,940	5.055	536	2,190	56.7°	78.9°	0.0°	78.9°	72°	118,285	960	9.86			97%	-
90-94/73	92.5	39.2	28.8	17	5,200	5.223	89	2,305	56.7°	81.1°	0.0°	81.1°	72°	136,958	206	11.41			112%	
				8,760.00			37,259								10,050	11.41				2,054

CONVERSION FACTORS				Design Conditions		
	116%	Sensible	/latent	Supply CFM	5,200	
FANHP (F.L.)	**5.46**	HP@	5,200	Total Cooling	122,250	200,000
RAFHP (F.L.)	**0.76**	HP@	2,895	Sensible Cooling	142,085	
FMEFF	**90%**	Percent		Air Side TD	25.30	
CFMREF	**5,200**	CFM		Supply HP	7.50	
DREFF	**97%**	Percent	(@F.L.)	T.S.P.	4.0	
MINVOL	**2,080**	CFM	CFM	Supply Fan Eff	60%	
Conv. Fact.	6,344	60	0.24	Return CFM	2,895	
Off Coil Conditions	57	24.18	28	Return T.S.P.	1.0	
Gas (BTU/CCF):	102,800	Heat Pipe Eff	-	Return Fan HP	1.0	
kW/ton=	0.95			Return Fan Eff	60%	

Proposed Operation

Bin DB temp/ WetBulb	Average Temp	enthapy OA btu/lb	enthapy Mixed Air btu/lb	Bin hrs	SA air flow CFM	Fan kW	Fan kWh	OA air flow CFM	Discharge Air Temp	MAT Air Temp	Heat Pipe Air Temp DT °F	MAT Air Temp w/ Hpipe	Space Temp setpoint	Total Cooling BTU/Hr	Total Cooling kW/h/year	Total Cooling Demand Tons	Total Heating BTU/Hr	Total Reheat BTU/Hr	Run Fraction	Proposed Heating CCF/year
-15 -11 / -12.6	-12.5	0.0		0	5,200	5.157	-	2,305	75.0°	34.5°	0.0°	34.5°	72°				200,000		100%	-
-10 -6 /-7.1	-7.5	0.0		0	5,200	5.157	-	2,305	75.0°	36.8°	0.0°	36.8°	72°				200,000		100%	-
-5 -1 /-2.9	-2.5	0.0		0	5,200	5.157	-	2,305	75.0°	39.0°	0.0°	39.0°	72°				200,000		100%	-
0-4/1	2.5	0.0		2	5,200	5.157	10	2,305	75.0°	41.2°	0.0°	41.2°	72°				189,861		95%	4.50
5-9/6	7.5	2.9		5	5,200	5.157	26	2,305	74.0°	43.4°	0.0°	43.4°	72°				171,798		89%	9.50
10-14/11	12.5	4.2		77	4,940	4.457	343	2,190	73.0°	45.6°	0.0°	45.6°	72°				146,049		78%	109.90
15-19/15	17.5	5.7		270	4,680	3.799	1,026	2,075	72.0°	47.8°	0.0°	47.8°	72°				122,105		69%	282.20
20-24/20	22.5	7.3		452	4,420	3.219	1,455	1,959	71.0°	50.1°	0.0°	50.1°	72°				99,968		60%	335.47
25-29/25	27.5	9.0		411	4,160	2.700	1,110	1,844	70.0°	52.3°	0.0°	52.3°	72°				79,637		51%	208.39
30-34/30	32.5	11.1		897	3,900	2.239	2,009	1,729	69.0°	54.5°	0.0°	54.5°	72°				61,112		43%	295.28
35-39/34	37.5	12.8		808	3,640	1.833	1,481	1,614	68.0°	56.7°	0.0°	56.7°	72°				44,394		36%	160.85
40-44/38	42.5	15.1		722	3,380	1.478	1,067	1,498	67.0°	58.9°	0.0°	58.9°	72°				29,482		29%	77.90
45-49/42	47.5	17.0		512	3,120	1.172	600	1,383	66.0°	61.1°	0.0°	61.1°	72°				16,377		35%	36.60
50-54/47	52.5	19.7	24.5	659	3,120	1.172	773	1,383	56.7°	63.4°	0.0°	63.4°	72°	22,429	176	1.87			15%	-
55-59/52	57.5	22.9	25.0	829	3,380	1.478	1,225	1,498	56.7°	65.6°	0.0°	65.6°	72°	32,389	563	2.70			26%	-
60-64/56	62.5	25.7	25.5	1010	3,640	1.833	1,851	1,614	56.7°	67.8°	0.0°	67.8°	72°	43,593	1,243	3.63			36%	-
65-69/60	67.5	28.7	26.1	812	3,900	2.239	1,818	1,729	56.7°	70.0°	0.0°	70.0°	72°	56,042	1,651	4.67			46%	-
70-74/63	72.5	31.0	26.6	470	4,160	2.700	1,269	1,844	56.7°	72.2°	0.0°	72.2°	72°	69,736	1,480	5.81			57%	-
75-79/66	77.5	32.4	27.2	436	4,420	3.219	1,403	1,959	56.7°	74.4°	0.0°	74.4°	72°	84,674	2,024	7.06			69%	-
80-84/69	82.5	33.8	27.7	265	4,680	3.799	1,007	2,075	56.7°	76.7°	0.0°	76.7°	72°	100,857	1,746	8.40			83%	-
85-89/72	87.5	36.5	28.2	106	4,940	4.457	472	2,190	56.7°	78.9°	0.0°	78.9°	72°	118,285	960	9.86			97%	-
90-94/73	92.5	39.2	28.8	17	5,200	5.157	88	2,305	56.7°	81.1°	0.0°	81.1°	72°	136,958	206	11.41			112%	
				8,760.00			19,033								10,050	11.41				1,521

Title	**BAS Upgrades & Modifications**
ECM#	**7**
Project:	**SCI Houtzdale**
Site:	**SCI Houtzdale**

CONVERSION FACTORS				Design Conditions		
SLR	**93%**	Sensible	/latent	Supply CFM	4,310	
FANHP (F.L.)	**0.49**	HP@	4,310	Total Cooling	119,250	38,000
RAFHP (F.L.)	**0.53**	HP@	2,005	Sensible Cooling	111,250	
FMEFF	**83%**	Percent		Air Side TD	23.90	
CFMREF	**4,310**	CFM		Supply HP	0.5	
DREFF	**97%**	Percent	(@F.L.)	T.S.P.	0.5	
MINVOL	**1,724**	CFM	CFM	Supply Fan Eff	70%	
Conv. Fact.	6,344	60	0.24	Return CFM	2,005	
Off Coil Conditions	55	23.12		Return T.S.P.	1.0	
Gas (BTU/CCF):	102,800	Heat Pipe Eff	-	Return Fan HP	1.0	
kW/ton=	0.95			Return Fan Eff	60%	

Existing Operation

Bin DB temp/ WetBulb	Average Temp	enthapy OA btu/lb	enthapy Mixed Air btu/lb	Bin hrs	SA air flow CFM	Fan kW	Fan kWh	OA air flow CFM	Discharge Air Temp	MAT Air Temp	Heat Pipe Air Temp DT °F	MAT Air Temp w/ Hpipe	Space Temp setpoint	Total Cooling BTU/Hr	Total Cooling kW/h/year	Total Cooling Demand Tons	Total Heating BTU/Hr	Total Reheat BTU/Hr	Run Fraction	Existing Heating CCF/year
-15 -11 / -12.6	-12.5	0.0		0	4,310	2.045	-	2,305	75.0°	26.8°	0.0°	26.8°	72°				38,000		100%	-
-10 -6 /-7.1	-7.5	0.0		0	4,310	2.045	-	2,305	75.0°	29.5°	0.0°	29.5°	72°				38,000		100%	-
-5 -1 /-2.9	-2.5	0.0		0	4,310	2.045	-	2,305	75.0°	32.2°	0.0°	32.2°	72°				38,000		100%	-
0-4/1	2.5	0.0		2	4,310	2.045	4	2,305	75.0°	34.8°	0.0°	34.8°	72°				38,000		100%	0.95
5-9/6	7.5	2.9		5	4,310	2.045	10	2,305	75.0°	37.5°	0.0°	37.5°	72°				38,000		100%	2.37
10-14/11	12.5	4.2		77	4,095	1.979	152	2,190	75.0°	40.2°	0.0°	40.2°	72°				38,000		100%	36.49
15-19/15	17.5	5.7		270	3,879	1.909	516	2,075	75.0°	42.9°	0.0°	42.9°	72°				38,000		100%	127.96
20-24/20	22.5	7.3		452	3,664	1.840	832	1,959	75.0°	45.5°	0.0°	45.5°	72°				38,000		100%	214.21
25-29/25	27.5	9.0		411	3,448	1.769	727	1,844	75.0°	48.2°	0.0°	48.2°	72°				38,000		100%	194.78
30-34/30	32.5	11.1		897	3,233	1.696	1,521	1,729	75.0°	50.9°	0.0°	50.9°	72°				38,000		100%	425.10
35-39/34	37.5	12.8		808	3,017	1.622	1,310	1,614	75.0°	53.5°	0.0°	53.5°	72°				38,000		100%	382.92
40-44/38	42.5	15.1		722	2,802	1.545	1,116	1,498	75.0°	56.2°	0.0°	56.2°	72°		-	-	38,000		100%	342.16
45-49/42	47.5	17.0		512	2,586	1.467	751	1,383	75.0°	58.9°	0.0°	58.9°	72°		-	-	38,000		35%	84.92
50-54/47	52.5	19.7	24.0	659	2,586	1.467	967	1,383	55.0°	61.6°	0.0°	61.6°	72°	18,353	144	1.53	-		15%	-
55-59/52	57.5	22.9	24.7	829	2,802	1.545	1,281	1,498	55.0°	64.2°	0.0°	64.2°	72°	27,973	431	2.33	-		23%	-
60-64/56	62.5	25.7	25.3	1010	3,017	1.622	1,638	1,614	55.0°	66.9°	0.0°	66.9°	72°	38,838	1,011	3.24	-		33%	-
65-69/60	67.5	28.7	26.0	812	3,233	1.696	1,377	1,729	55.0°	69.6°	0.0°	69.6°	72°	50,947	1,399	4.25			43%	-
70-74/63	72.5	31.0	26.6	470	3,448	1.769	831	1,844	55.0°	72.3°	0.0°	72.3°	72°	64,301	1,290	5.36			54%	-
75-79/66	77.5	32.4	27.3	436	3,664	1.840	802	1,959	55.0°	74.9°	0.0°	74.9°	72°	78,900	1,802	6.57			66%	-
80-84/69	82.5	33.8	27.9	265	3,879	1.909	506	2,075	55.0°	77.6°	0.0°	77.6°	72°	94,743	1,579	7.90			79%	-
85-89/72	87.5	36.5	28.6	106	4,095	1.979	210	2,190	55.0°	80.3°	0.0°	80.3°	72°	111,831	880	9.32			94%	-
90-94/73	92.5	39.2	29.2	17	4,310	2.045	35	2,305	55.0°	83.0°	0.0°	83.0°	72°	130,164	191	10.85			109%	
				8,760.00			14,586								8,727	10.85				1,812

CONVERSION FACTORS				Design Conditions		
	93%	Sensible	/latent	Supply CFM	4,310	
FANHP (F.L.)	**0.49**	HP@	4,310	Total Cooling	119,250	38,000
RAFHP (F.L.)	**0.53**	HP@	2,005	Sensible Cooling	111,250	
FMEFF	**83%**	Percent		Air Side TD	23.90	
CFMREF	**4,310**	CFM		Supply HP	0.50	
DREFF	**97%**	Percent	(@F.L.)	T.S.P.	0.5	
MINVOL	**1,724**	CFM	CFM	Supply Fan Eff	70%	
Conv. Fact.	6,344	60	0.24	Return CFM	2,005	
Off Coil Conditions	55	23.12	28	Return T.S.P.	1.0	
Gas (BTU/CCF):	102,800	Heat Pipe Eff	-	Return Fan HP	1.0	
kW/ton=	0.95			Return Fan Eff	60%	

Proposed Operation

Bin DB temp/ WetBulb	Average Temp	enthapy OA btu/lb	enthapy Mixed Air btu/lb	Bin hrs	SA air flow CFM	Fan kW	Fan kWh	OA air flow CFM	Discharge Air Temp	MAT Air Temp	Heat Pipe Air Temp DT °F	MAT Air Temp w/ Hpipe	Space Temp setpoint	Total Cooling BTU/Hr	Total Cooling kW/h/year	Total Cooling Demand Tons	Total Heating BTU/Hr	Total Reheat BTU/Hr	Run Fraction	Proposed Heating CCF/year
-15 -11 / -12.6	-12.5	0.0		0	4,310	2.019	-	2,305	75.0°	26.8°	0.0°	26.8°	72°				38,000		100%	-
-10 -6 /-7.1	-7.5	0.0		0	4,310	2.019	-	2,305	75.0°	29.5°	0.0°	29.5°	72°				38,000		100%	-
-5 -1 /-2.9	-2.5	0.0		0	4,310	2.019	-	2,305	75.0°	32.2°	0.0°	32.2°	72°				38,000		100%	-
0-4/1	2.5	0.0		2	4,310	2.019	4	2,305	75.0°	34.8°	0.0°	34.8°	72°				38,000		100%	0.95
5-9/6	7.5	2.9		5	4,310	2.019	10	2,305	74.0°	37.5°	0.0°	37.5°	72°				38,000		100%	2.37
10-14/11	12.5	4.2		77	4,095	1.745	134	2,190	73.0°	40.2°	0.0°	40.2°	72°				38,000		100%	36.49
15-19/15	17.5	5.7		270	3,879	1.487	402	2,075	72.0°	42.9°	0.0°	42.9°	72°				38,000		100%	127.96
20-24/20	22.5	7.3		452	3,664	1.260	570	1,959	71.0°	45.5°	0.0°	45.5°	72°				38,000		100%	214.21
25-29/25	27.5	9.0		411	3,448	1.057	434	1,844	70.0°	48.2°	0.0°	48.2°	72°				38,000		100%	194.78
30-34/30	32.5	11.1		897	3,233	0.877	786	1,729	69.0°	50.9°	0.0°	50.9°	72°				38,000		100%	425.10
35-39/34	37.5	12.8		808	3,017	0.718	580	1,614	68.0°	53.5°	0.0°	53.5°	72°				38,000		100%	382.92
40-44/38	42.5	15.1		722	2,802	0.579	418	1,498	67.0°	56.2°	0.0°	56.2°	72°				32,606		100%	293.60
45-49/42	47.5	17.0		512	2,586	0.459	235	1,383	66.0°	58.9°	0.0°	58.9°	72°				19,837		35%	44.33
50-54/47	52.5	19.7	24.0	659	2,586	0.459	302	1,383	55.0°	61.6°	0.0°	61.6°	72°	18,353	144	1.53	-		15%	-
55-59/52	57.5	22.9	24.7	829	2,802	0.579	480	1,498	55.0°	64.2°	0.0°	64.2°	72°	27,973	431	2.33			23%	-
60-64/56	62.5	25.7	25.3	1010	3,017	0.718	725	1,614	55.0°	66.9°	0.0°	66.9°	72°	38,838	1,011	3.24			33%	-
65-69/60	67.5	28.7	26.0	812	3,233	0.877	712	1,729	55.0°	69.6°	0.0°	69.6°	72°	50,947	1,399	4.25			43%	-
70-74/63	72.5	31.0	26.6	470	3,448	1.057	497	1,844	55.0°	72.3°	0.0°	72.3°	72°	64,301	1,290	5.36			54%	-
75-79/66	77.5	32.4	27.3	436	3,664	1.260	549	1,959	55.0°	74.9°	0.0°	74.9°	72°	78,900	1,802	6.57			66%	-
80-84/69	82.5	33.8	27.9	265	3,879	1.487	394	2,075	55.0°	77.6°	0.0°	77.6°	72°	94,743	1,579	7.90			79%	-
85-89/72	87.5	36.5	28.6	106	4,095	1.745	185	2,190	55.0°	80.3°	0.0°	80.3°	72°	111,831	880	9.32			94%	-
90-94/73	92.5	39.2	29.2	17	4,310	2.019	34	2,305	55.0°	83.0°	0.0°	83.0°	72°	130,164	191	10.85			109%	
				8,760.00			7,451								8,727	10.85				1,723

Title	**BAS Upgrades & Modifications**
ECM#	**7**
Project:	**SCI Houtzdale**
Site:	**SCI Houtzdale**

CONVERSION FACTORS				Design Conditions		
SLR	**65%**	Sensible	/latent	Supply CFM	7,840	
FANHP (F.L.)	**6.18**	HP@	7,840	Total Cooling	328,500	258,000
RAFHP (F.L.)	**1.09**	HP@	5,535	Sensible Cooling	215,067	
FMEFF	**90%**	Percent		Air Side TD	25.40	
CFMREF	**7,840**	CFM		Supply HP	7.5	
DREFF	**97%**	Percent	(@F.L.)	T.S.P.	3.0	
MINVOL	**3,136**	CFM	CFM	Supply Fan Eff	60%	
Conv. Fact.	6,344	60	0.24	Return CFM	5,535	
Off Coil Conditions	57	21.46		Return T.S.P.	1.0	
Gas (BTU/CCF):	102,800	Heat Pipe Eff.	-	Return Fan HP	0.8	
kW/ton=	0.95			Return Fan Eff	80%	

Existing Operation

Bin DB temp/ WetBulb	Average Temp	enthapy OA btu/lb	enthapy Mixed Air btu/lb	Bin hrs	SA air flow CFM	Fan kW	Fan kWh	OA air flow CFM	Discharge Air Temp	MAT Air Temp	Heat Pipe Air Temp DT °F	MAT Air Temp w/ Hpipe	Space Temp setpoint	Total Cooling BTU/Hr	Total Cooling kW/h/year	Total Cooling Demand Tons	Total Heating BTU/Hr	Total Reheat BTU/Hr	Run Fraction	Existing Heating CCF/year
-15 -11 / -12.6	-12.5	0.0		0	7,840	6.059	-	2,305	75.0°	47.2°	0.0°	47.2°	72°				235,756		100%	-
-10 -6 /-7.1	-7.5	0.0		0	7,840	6.059	-	2,305	75.0°	48.6°	0.0°	48.6°	72°				223,309		100%	-
-5 -1 /-2.9	-2.5	0.0		0	7,840	6.059	-	2,305	75.0°	50.1°	0.0°	50.1°	72°				210,862		100%	-
0-4/1	2.5	0.0		2	7,840	6.059	12	2,305	75.0°	51.6°	0.0°	51.6°	72°				198,415		77%	3.81
5-9/6	7.5	2.9		5	7,840	6.059	30	2,305	75.0°	53.0°	0.0°	53.0°	72°				185,968		72%	8.36
10-14/11	12.5	4.2		77	7,840	6.059	467	2,305	75.0°	54.5°	0.0°	54.5°	72°				173,521		67%	112.07
15-19/15	17.5	5.7		270	7,840	6.059	1,636	2,305	75.0°	56.0°	0.0°	56.0°	72°				161,074		62%	338.62
20-24/20	22.5	7.3		452	7,840	6.059	2,739	2,305	75.0°	57.4°	0.0°	57.4°	72°				148,627		58%	482.64
25-29/25	27.5	9.0		411	7,840	6.059	2,490	2,305	75.0°	58.9°	0.0°	58.9°	72°				136,180		53%	368.43
30-34/30	32.5	11.1		897	7,840	6.059	5,435	2,305	75.0°	60.4°	0.0°	60.4°	72°				123,733		48%	663.83
35-39/34	37.5	12.8		808	7,840	6.059	4,896	2,305	75.0°	61.9°	0.0°	61.9°	72°				111,286		43%	483.71
40-44/38	42.5	15.1		722	7,840	6.059	4,375	2,305	75.0°	63.3°	0.0°	63.3°	72°		-	-	98,839		38%	340.95
45-49/42	47.5	17.0		512	7,840	6.059	3,102	2,305	75.0°	64.8°	0.0°	64.8°	72°		-	-	86,392		35%	193.07
50-54/47	52.5	19.7	25.2	659	7,840	6.059	3,993	2,305	56.7°	66.3°	0.0°	66.3°	72°		-	-	-		15%	-
55-59/52	57.5	22.9	25.5	829	7,840	6.059	5,023	2,305	56.7°	67.7°	0.0°	67.7°	72°	143,234	4,099	11.94	-		44%	-
60-64/56	62.5	25.7	25.9	1010	7,840	6.059	6,120	2,305	56.7°	69.2°	0.0°	69.2°	72°	155,876	5,914	12.99	-		47%	-
65-69/60	67.5	28.7	26.2	812	7,840	6.059	4,920	2,305	56.7°	70.7°	0.0°	70.7°	72°	168,518	5,557	14.04			51%	-
70-74/63	72.5	31.0	26.6	470	7,840	6.059	2,848	2,305	56.7°	72.1°	0.0°	72.1°	72°	181,161	3,717	15.10			55%	-
75-79/66	77.5	32.4	27.0	436	7,840	6.059	2,642	2,305	56.7°	73.6°	0.0°	73.6°	72°	193,803	3,947	16.15			59%	-
80-84/69	82.5	33.8	27.3	265	7,840	6.059	1,606	2,305	56.7°	75.1°	0.0°	75.1°	72°	206,446	2,722	17.20			63%	-
85-89/72	87.5	36.5	27.7	106	7,840	6.059	642	2,305	56.7°	76.6°	0.0°	76.6°	72°	219,088	1,226	18.26			67%	-
90-94/73	92.5	39.2	28.0	17	7,840	6.059	103	2,305	56.7°	78.0°	0.0°	78.0°	72°	231,731	220	19.31			71%	
				8,760.00			53,080								27,402	19.31				2,995

CONVERSION FACTORS				Design Conditions		
	65%	Sensible	/latent	Supply CFM	7,840	
FANHP (F.L.)	**6.18**	HP@	7,840	Total Cooling	328,500	258,000
RAFHP (F.L.)	**1.09**	HP@	5,535	Sensible Cooling	215,067	
FMEFF	**90%**	Percent		Air Side TD	25.40	
CFMREF	**7,840**	CFM		Supply HP	7.50	
DREFF	**97%**	Percent	(@F.L.)	T.S.P.	3.0	
MINVOL	**3,136**	CFM	CFM	Supply Fan Eff	60%	
Conv. Fact.	6,344	60	0.24	Return CFM	5,535	
Off Coil Conditions	57	21.46	28	Return T.S.P.	1.0	
Gas (BTU/CCF):	102,800	Heat Pipe Eff.	-	Return Fan HP	0.8	
kW/ton=	0.95			Return Fan Eff	80%	

Proposed Operation

Bin DB temp/ WetBulb	Average Temp	enthapy OA btu/lb	enthapy Mixed Air btu/lb	Bin hrs	SA air flow CFM	Fan kW	Fan kWh	OA air flow CFM	Discharge Air Temp	MAT Air Temp	Heat Pipe Air Temp DT °F	MAT Air Temp w/ Hpipe	Space Temp setpoint	Total Cooling BTU/Hr	Total Cooling kW/h/year	Total Cooling Demand Tons	Total Heating BTU/Hr	Total Reheat BTU/Hr	Run Fraction	Proposed Heating CCF/year
-15 -11 / -12.6	-12.5	0.0		0	7,840	6.059	-	2,305	75.0°	47.2°	0.0°	47.2°	72°				235,756		100%	-
-10 -6 /-7.1	-7.5	0.0		0	7,840	6.059	-	2,305	75.0°	48.6°	0.0°	48.6°	72°				223,309		100%	-
-5 -1 /-2.9	-2.5	0.0		0	7,840	6.059	-	2,305	75.0°	50.1°	0.0°	50.1°	72°				210,862		100%	-
0-4/1	2.5	0.0		2	7,840	6.059	12	2,305	75.0°	51.6°	0.0°	51.6°	72°				198,415		77%	3.81
5-9/6	7.5	2.9		3	7,840	6.059	18	2,305	74.0°	53.0°	0.0°	53.0°	72°				177,501		72%	4.79
10-14/11	12.5	4.2		42	7,840	6.059	254	2,305	73.0°	54.5°	0.0°	54.5°	72°				156,587		67%	55.16
15-19/15	17.5	5.7		179	7,840	6.059	1,085	2,305	72.0°	56.0°	0.0°	56.0°	72°				135,672		62%	189.09
20-24/20	22.5	7.3		325	7,840	6.059	1,969	2,305	71.0°	57.4°	0.0°	57.4°	72°				114,758		58%	267.95
25-29/25	27.5	9.0		303	7,840	6.059	1,836	2,305	70.0°	58.9°	0.0°	58.9°	72°				93,844		53%	187.18
30-34/30	32.5	11.1		628	7,840	6.059	3,805	2,305	69.0°	60.4°	0.0°	60.4°	72°				72,930		48%	273.93
35-39/34	37.5	12.8		590	7,840	6.059	3,575	2,305	68.0°	61.9°	0.0°	61.9°	72°				52,016		43%	165.09
40-44/38	42.5	15.1		505	7,840	6.059	3,060	2,305	67.0°	63.3°	0.0°	63.3°	72°				31,101		38%	75.04
45-49/42	47.5	17.0		386	7,840	6.059	2,339	2,305	66.0°	64.8°	0.0°	64.8°	72°				10,187		35%	17.16
50-54/47	52.5	19.7	25.2	469	7,840	6.059	2,842	2,305.00	56.7°	66.3°	0.0°	66.3°	72°		-	-			15%	-
55-59/52	57.5	22.9	25.5	562	7,840	6.059	3,405	2,305.00	56.7°	67.7°	0.0°	67.7°	72°	143,234	2,779	11.94			44%	-
60-64/56	62.5	25.7	25.9	719	7,840	6.059	4,357	2,305.00	56.7°	69.2°	0.0°	69.2°	72°	155,876	4,210	12.99			47%	-
65-69/60	67.5	28.7	26.2	622	7,840	6.059	3,769	2,305	56.7°	70.7°	0.0°	70.7°	72°	168,518	4,257	14.04			51%	-
70-74/63	72.5	31.0	26.6	431	7,840	6.059	2,612	2,305	56.7°	72.1°	0.0°	72.1°	72°	181,161	3,409	15.10			55%	-
75-79/66	77.5	32.4	27.0	416	7,840	6.059	2,521	2,305	56.7°	73.6°	0.0°	73.6°	72°	193,803	3,766	16.15			59%	-
80-84/69	82.5	33.8	27.3	265	7,840	6.059	1,606	2,305	56.7°	75.1°	0.0°	75.1°	72°	206,446	2,722	17.20			63%	-
85-89/72	87.5	36.5	27.7	106	7,840	6.059	642	2,305	56.7°	76.6°	0.0°	76.6°	72°	219,088	1,226	18.26			67%	-
90-94/73	92.5	39.2	28.0	17	7,840	6.059	103	2,305	56.7°	78.0°	0.0°	78.0°	72°	231,731	220	19.31			71%	
				6,570.00			39,810								22,588	19.31				1,239

Title	**BAS Upgrades & Modifications**
ECM#	**7**
Project:	**SCI Houtzdale**
Site:	**SCI Houtzdale**

CONVERSION FACTORS				Design Conditions		
SLR	**63%**	Sensible	/latent	Supply CFM	18,800	
FANHP (F.L.)	**14.82**	HP@	18,800	Total Cooling	861,750	630,000
RAFHP (F.L.)	-	HP@	16,495	Sensible Cooling	540,086	
FMEFF	**91%**	Percent		Air Side TD	26.60	
CFMREF	**18,800**	CFM		Supply HP	20.0	
DREFF	**97%**	Percent	(@F.L.)	T.S.P.	3.0	
MINVOL	**7,520**	CFM	CFM	Supply Fan Eff	60%	
Conv. Fact.	6,344	60	0.24	Return CFM	16,495	
Off Coil Conditions	55	23.12		Return T.S.P.		
Gas (BTU/CCF):	102,800	Heat Pipe Eff	-	Return Fan HP	-	
kW/ton=	0.95			Return Fan Eff	80%	

Existing Operation

Bin DB temp/ WetBulb	Average Temp	enthapy OA btu/lb	enthapy Mixed Air btu/lb	Bin hrs	SA air flow CFM	Fan kW	Fan kWh	OA air flow CFM	Discharge Air Temp	MAT Air Temp	Heat Pipe Air Temp DT °F	MAT Air Temp w/ Hpipe	Space Temp setpoint	Total Cooling BTU/Hr	Total Cooling kW/h/year	Total Cooling Demand Tons	Total Heating BTU/Hr	Total Reheat BTU/Hr	Run Fraction	Existing Heating CCF/year
-15 -11 / -12.6	-12.5	0.0		0	18,800	12.102	-	2,305	75.0°	61.6°	0.0°	61.6°	72°				271,266		100%	-
-10 -6 /-7.1	-7.5	0.0		0	18,800	12.102	-	2,305	75.0°	62.3°	0.0°	62.3°	72°				258,819		100%	-
-5 -1 /-2.9	-2.5	0.0		0	18,800	12.102	-	2,305	75.0°	62.9°	0.0°	62.9°	72°				246,372		100%	-
0-4/1	2.5	0.0		2	18,800	12.102	24	2,305	75.0°	63.5°	0.0°	63.5°	72°				233,925		37%	2.17
5-9/6	7.5	2.9		5	18,800	12.102	61	2,305	75.0°	64.1°	0.0°	64.1°	72°				221,478		35%	4.86
10-14/11	12.5	4.2		77	17,860	11.713	902	2,190	75.0°	64.7°	0.0°	64.7°	72°				198,580		32%	60.11
15-19/15	17.5	5.7		270	16,920	11.301	3,051	2,075	75.0°	65.3°	0.0°	65.3°	72°				176,926		28%	167.31
20-24/20	22.5	7.3		452	15,980	10.889	4,922	1,959	75.0°	65.9°	0.0°	65.9°	72°				156,517		25%	219.20
25-29/25	27.5	9.0		411	15,040	10.468	4,302	1,844	75.0°	66.5°	0.0°	66.5°	72°				137,352		22%	153.49
30-34/30	32.5	11.1		897	14,100	10.038	9,004	1,729	75.0°	67.2°	0.0°	67.2°	72°				119,432		19%	253.28
35-39/34	37.5	12.8		808	13,160	9.598	7,755	1,614	75.0°	67.8°	0.0°	67.8°	72°				102,757		16%	168.89
40-44/38	42.5	15.1		722	12,220	9.145	6,603	1,498	75.0°	68.4°	0.0°	68.4°	72°		-	-	87,327		14%	108.99
45-49/42	47.5	17.0		512	11,280	8.683	4,446	1,383	75.0°	69.0°	0.0°	69.0°	72°		-	-	73,141		35%	163.46
50-54/47	52.5	19.7	26.0	659	11,280	8.683	5,722	1,383	55.1°	69.6°	0.0°	69.6°	72°	176,757	1,383	14.73	-		15%	-
55-59/52	57.5	22.9	26.1	829	12,220	9.145	7,582	1,498	55.1°	70.2°	0.0°	70.2°	72°	199,577	3,033	16.63	-		23%	-
60-64/56	62.5	25.7	26.3	1010	13,160	9.598	9,694	1,614	55.1°	70.8°	0.0°	70.8°	72°	223,642	4,641	18.64	-		26%	-
65-69/60	67.5	28.7	26.4	812	14,100	10.038	8,151	1,729	55.1°	71.4°	0.0°	71.4°	72°	248,951	4,623	20.75			29%	-
70-74/63	72.5	31.0	26.6	470	15,040	10.468	4,920	1,844	55.1°	72.1°	0.0°	72.1°	72°	275,506	3,277	22.96			32%	-
75-79/66	77.5	32.4	26.7	436	15,980	10.889	4,748	1,959	55.1°	72.7°	0.0°	72.7°	72°	303,305	3,685	25.28			35%	-
80-84/69	82.5	33.8	26.9	265	16,920	11.301	2,995	2,075	55.1°	73.3°	0.0°	73.3°	72°	332,349	2,689	27.70			39%	-
85-89/72	87.5	36.5	27.0	106	17,860	11.713	1,242	2,190	55.1°	73.9°	0.0°	73.9°	72°	362,637	1,281	30.22			42%	-
90-94/73	92.5	39.2	27.2	17	18,800	12.102	206	2,305	55.1°	74.5°	0.0°	74.5°	72°	394,170	243	32.85			46%	
				8,760.00			86,328								24,855	32.85				1,302

CONVERSION FACTORS				Design Conditions		
	63%	Sensible	/latent	Supply CFM	18,800	
FANHP (F.L.)	**14.82**	HP@	18,800	Total Cooling	861,750	630,000
RAFHP (F.L.)	-	HP@	16,495	Sensible Cooling	540,086	
FMEFF	**91%**	Percent		Air Side TD	26.60	
CFMREF	**18,800**	CFM		Supply HP	20.00	
DREFF	**97%**	Percent	(@F.L.)	T.S.P.	3.0	
MINVOL	**7,520**	CFM	CFM	Supply Fan Eff	65%	
Conv. Fact.	6,344	60	0.24	Return CFM	16,495	
Off Coil Conditions	55	23.12	28	Return T.S.P.		
Gas (BTU/CCF):	102,800	Heat Pipe Eff	-	Return Fan HP	-	
kW/ton=	0.95			Return Fan Eff	60%	

Proposed Operation

Bin DB temp/ WetBulb	Average Temp	enthapy OA btu/lb	enthapy Mixed Air btu/lb	Bin hrs	SA air flow CFM	Fan kW	Fan kWh	OA air flow CFM	Discharge Air Temp	MAT Air Temp	Heat Pipe Air Temp DT °F	MAT Air Temp w/ Hpipe	Space Temp setpoint	Total Cooling BTU/Hr	Total Cooling kW/h/year	Total Cooling Demand Tons	Total Heating BTU/Hr	Total Reheat BTU/Hr	Run Fraction	Proposed Heating CCF/year
-15 -11 / -12.6	-12.5	0.0		0	18,800	11.948	-	2,305	75.0°	61.6°	0.0°	61.6°	72°				271,266		100%	-
-10 -6 /-7.1	-7.5	0.0		0	18,800	11.948	-	2,305	75.0°	62.3°	0.0°	62.3°	72°				258,819		100%	-
-5 -1 /-2.9	-2.5	0.0		0	18,800	11.948	-	2,305	75.0°	62.9°	0.0°	62.9°	72°				246,372		100%	-
0-4/1	2.5	0.0		2	18,800	11.948	24	2,305	75.0°	63.5°	0.0°	63.5°	72°				233,925		37%	2.17
5-9/6	7.5	2.9		3	18,800	11.948	36	2,305	75.0°	64.1°	0.0°	64.1°	72°				221,478		35%	2.91
10-14/11	12.5	4.2		42	17,860	10.328	434	2,190	75.0°	64.7°	0.0°	64.7°	72°				198,580		32%	32.79
15-19/15	17.5	5.7		179	16,920	8.803	1,576	2,075	75.0°	65.3°	0.0°	65.3°	72°				176,926		28%	110.92
20-24/20	22.5	7.3		325	15,980	7.458	2,424	1,959	75.0°	65.9°	0.0°	65.9°	72°				156,517		25%	157.61
25-29/25	27.5	9.0		303	15,040	6.256	1,895	1,844	75.0°	66.5°	0.0°	66.5°	72°				137,352		22%	113.16
30-34/30	32.5	11.1		628	14,100	5.189	3,259	1,729	75.0°	67.2°	0.0°	67.2°	72°				119,432		19%	177.33
35-39/34	37.5	12.8		590	13,160	4.247	2,506	1,614	75.0°	67.8°	0.0°	67.8°	72°				102,757		16%	123.32
40-44/38	42.5	15.1		505	12,220	3.424	1,729	1,498	75.0°	68.4°	0.0°	68.4°	72°				87,327		14%	76.24
45-49/42	47.5	17.0		386	11,280	2.716	1,048	1,383	75.0°	69.0°	0.0°	69.0°	72°				73,141		35%	123.23
50-54/47	52.5	19.7	26.0	469	11,280	2.716	1,274	1,383	55.1°	69.6°	0.0°	69.6°	72°	176,757	984	14.73			15%	-
55-59/52	57.5	22.9	26.1	562	12,220	3.424	1,924	1,498	55.1°	70.2°	0.0°	70.2°	72°	199,577	2,056	16.63			23%	-
60-64/56	62.5	25.7	26.3	719	13,160	4.247	3,054	1,614	55.1°	70.8°	0.0°	70.8°	72°	223,642	3,304	18.64			26%	-
65-69/60	67.5	28.7	26.4	622	14,100	5.189	3,227	1,729	55.1°	71.4°	0.0°	71.4°	72°	248,951	3,541	20.75			29%	-
70-74/63	72.5	31.0	26.6	431	15,040	6.256	2,696	1,844	55.1°	72.1°	0.0°	72.1°	72°	275,506	3,005	22.96			32%	-
75-79/66	77.5	32.4	26.7	416	15,980	7.458	3,103	1,959	55.1°	72.7°	0.0°	72.7°	72°	303,305	3,516	25.28			35%	-
80-84/69	82.5	33.8	26.9	265	16,920	8.803	2,333	2,075	55.1°	73.3°	0.0°	73.3°	72°	332,349	2,689	27.70			39%	-
85-89/72	87.5	36.5	27.0	106	17,860	10.328	1,095	2,190	55.1°	73.9°	0.0°	73.9°	72°	362,637	1,281	30.22			42%	-
90-94/73	92.5	39.2	27.2	17	18,800	11.948	203	2,305	55.1°	74.5°	0.0°	74.5°	72°	394,170	243	32.85			46%	
				6,570.00			33,839								20,619	32.85				920

Title	**BAS Upgrades & Modifications**
ECM#	**7**
Project:	**SCI Houtzdale**
Site:	**SCI Houtzdale**

CONVERSION FACTORS				Design Conditions		
SLR	**71%**	Sensible	/latent	Supply CFM	13,000	
FANHP (F.L.)	**11.95**	HP@	13,000	Total Cooling	534,750	470,000
RAFHP (F.L.)	**3.61**	HP@	10,695	Sensible Cooling	381,888	
FMEFF	**91%**	Percent		Air Side TD	27.20	
CFMREF	**13,000**	CFM		Supply HP	15.0	
DREFF	**97%**	Percent	(@F.L.)	T.S.P.	3.5	
MINVOL	**5,200**	CFM	CFM	Supply Fan Eff	60%	
Conv. Fact.	6,344	60	0.24	Return CFM	10,695	
Off Coil Conditions	55	22.94		Return T.S.P.	1.5	
Gas (BTU/CCF):	102,800	Heat Pipe Eff.	-	Return Fan HP	3.0	
kW/ton=	0.95			Return Fan Eff	70%	

Existing Operation

Bin DB temp/ WetBulb	Average Temp	enthapy OA btu/lb	enthapy Mixed Air btu/lb	Bin hrs	SA air flow CFM	Fan kW	Fan kWh	OA air flow CFM	Discharge Air Temp	MAT Air Temp	Heat Pipe Air Temp DT °F	MAT Air Temp w/ Hpipe	Space Temp setpoint	Total Cooling BTU/Hr	Total Cooling kW/h/year	Total Cooling Demand Tons	Total Heating BTU/Hr	Total Reheat BTU/Hr	Run Fraction	Existing Heating CCF/year
-15 -11 / -12.6	-12.5	0.0		0	13,000	12.832	-	2,305	75.0°	57.0°	0.0°	57.0°	72°				252,474		100%	-
-10 -6 /-7.1	-7.5	0.0		0	13,000	12.832	-	2,305	75.0°	57.9°	0.0°	57.9°	72°				240,027		100%	-
-5 -1 /-2.9	-2.5	0.0		0	13,000	12.832	-	2,305	75.0°	58.8°	0.0°	58.8°	72°				227,580		100%	-
0-4/1	2.5	0.0		2	13,000	12.832	26	2,305	75.0°	59.7°	0.0°	59.7°	72°				215,133		46%	2.46
5-9/6	7.5	2.9		5	13,000	12.832	64	2,305	75.0°	60.6°	0.0°	60.6°	72°				202,686		43%	5.45
10-14/11	12.5	4.2		77	12,350	12.419	956	2,190	75.0°	61.5°	0.0°	61.5°	72°				180,727		38%	66.73
15-19/15	17.5	5.7		270	11,700	11.982	3,235	2,075	75.0°	62.3°	0.0°	62.3°	72°				160,013		34%	183.44
20-24/20	22.5	7.3		452	11,050	11.546	5,219	1,959	75.0°	63.2°	0.0°	63.2°	72°				140,544		30%	236.91
25-29/25	27.5	9.0		411	10,400	11.099	4,562	1,844	75.0°	64.1°	0.0°	64.1°	72°				122,319		26%	163.17
30-34/30	32.5	11.1		897	9,750	10.644	9,547	1,729	75.0°	65.0°	0.0°	65.0°	72°				105,338		22%	264.11
35-39/34	37.5	12.8		808	9,100	10.177	8,223	1,614	75.0°	65.9°	0.0°	65.9°	72°				89,603		19%	172.14
40-44/38	42.5	15.1		722	8,450	9.697	7,001	1,498	75.0°	66.8°	0.0°	66.8°	72°		-	-	75,112		16%	108.09
45-49/42	47.5	17.0		512	7,800	9.206	4,714	1,383	75.0°	67.7°	0.0°	67.7°	72°		-	-	61,866		35%	138.26
50-54/47	52.5	19.7	25.7	659	7,800	9.206	6,067	1,383	54.8°	68.5°	0.0°	68.5°	72°	115,767	906	9.65	-		15%	-
55-59/52	57.5	22.9	25.9	829	8,450	9.697	8,039	1,498	54.8°	69.4°	0.0°	69.4°	72°	133,505	2,187	11.13	-		25%	-
60-64/56	62.5	25.7	26.1	1010	9,100	10.177	10,278	1,614	54.8°	70.3°	0.0°	70.3°	72°	152,487	3,477	12.71	-		29%	-
65-69/60	67.5	28.7	26.4	812	9,750	10.644	8,643	1,729	54.8°	71.2°	0.0°	71.2°	72°	172,714	3,586	14.39			32%	-
70-74/63	72.5	31.0	26.6	470	10,400	11.099	5,217	1,844	54.8°	72.1°	0.0°	72.1°	72°	194,186	2,624	16.18			36%	-
75-79/66	77.5	32.4	26.8	436	11,050	11.546	5,034	1,959	54.8°	73.0°	0.0°	73.0°	72°	216,903	3,037	18.08			41%	-
80-84/69	82.5	33.8	27.0	265	11,700	11.982	3,175	2,075	54.8°	73.9°	0.0°	73.9°	72°	240,864	2,276	20.07			45%	-
85-89/72	87.5	36.5	27.2	106	12,350	12.419	1,316	2,190	54.8°	74.7°	0.0°	74.7°	72°	266,070	1,111	22.17			50%	-
90-94/73	92.5	39.2	27.4	17	13,000	12.832	218	2,305	54.8°	75.6°	0.0°	75.6°	72°	292,521	215	24.38			55%	
				8,760.00			91,534								19,419	24.38				1,341

CONVERSION FACTORS				Design Conditions		
	71%	Sensible	/latent	Supply CFM	13,000	
FANHP (F.L.)	**11.95**	HP@	13,000	Total Cooling	534,750	470,000
RAFHP (F.L.)	**3.61**	HP@	10,695	Sensible Cooling	381,888	
FMEFF	**91%**	Percent		Air Side TD	27.20	
CFMREF	**13,000**	CFM		Supply HP	15.00	
DREFF	**97%**	Percent	(@F.L.)	T.S.P.	3.5	
MINVOL	**5,200**	CFM	CFM	Supply Fan Eff	60%	
Conv. Fact.	6,344	60	0.24	Return CFM	10,695	
Off Coil Conditions	55	22.94	28	Return T.S.P.	1.5	
Gas (BTU/CCF):	102,800	Heat Pipe Eff.	-	Return Fan HP	3.0	
kW/ton=	0.95			Return Fan Eff	70%	

Proposed Operation

Bin DB temp/ WetBulb	Average Temp	enthapy OA btu/lb	enthapy Mixed Air btu/lb	Bin hrs	SA air flow CFM	Fan kW	Fan kWh	OA air flow CFM	Discharge Air Temp	MAT Air Temp	Heat Pipe Air Temp DT °F	MAT Air Temp w/ Hpipe	Space Temp setpoint	Total Cooling BTU/Hr	Total Cooling kW/h/year	Total Cooling Demand Tons	Total Heating BTU/Hr	Total Reheat BTU/Hr	Run Fraction	Proposed Heating CCF/year
-15 -11 / -12.6	-12.5	0.0		0	13,000	12.669	-	2,305	75.0°	57.0°	0.0°	57.0°	72°				252,474		100%	-
-10 -6 /-7.1	-7.5	0.0		0	13,000	12.669	-	2,305	75.0°	57.9°	0.0°	57.9°	72°				240,027		100%	-
-5 -1 /-2.9	-2.5	0.0		0	13,000	12.669	-	2,305	75.0°	58.8°	0.0°	58.8°	72°				227,580		100%	-
0-4/1	2.5	0.0		2	13,000	12.669	25	2,305	75.0°	59.7°	0.0°	59.7°	72°				215,133		46%	2.46
5-9/6	7.5	2.9		3	13,000	12.669	38	2,305	74.0°	60.6°	0.0°	60.6°	72°				188,646		43%	3.04
10-14/11	12.5	4.2		42	12,350	10.951	460	2,190	73.0°	61.5°	0.0°	61.5°	72°				154,051		38%	31.03
15-19/15	17.5	5.7		179	11,700	9.333	1,671	2,075	72.0°	62.3°	0.0°	62.3°	72°				122,105		34%	92.80
20-24/20	22.5	7.3		325	11,050	7.908	2,570	1,959	71.0°	63.2°	0.0°	63.2°	72°				92,808		30%	112.48
25-29/25	27.5	9.0		303	10,400	6.633	2,010	1,844	70.0°	64.1°	0.0°	64.1°	72°				66,159		26%	65.06
30-34/30	32.5	11.1		628	9,750	5.502	3,455	1,729	69.0°	65.0°	0.0°	65.0°	72°				42,158		22%	74.00
35-39/34	37.5	12.8		590	9,100	4.503	2,657	1,614	68.0°	65.9°	0.0°	65.9°	72°				20,807		19%	29.19
40-44/38	42.5	15.1		505	8,450	3.630	1,833	1,498	67.0°	66.8°	0.0°	66.8°	72°				2,104		16%	2.12
45-49/42	47.5	17.0		386	7,800	2.880	1,112	1,383	66.0°	67.7°	0.0°	67.7°	72°				-		35%	-
50-54/47	52.5	19.7	25.7	469	7,800	2.880	1,351	1,383	54.8°	68.5°	0.0°	68.5°	72°	115,767	645	9.65			15%	-
55-59/52	57.5	22.9	25.9	562	8,450	3.630	2,040	1,498	54.8°	69.4°	0.0°	69.4°	72°	133,505	1,483	11.13			25%	-
60-64/56	62.5	25.7	26.1	719	9,100	4.503	3,238	1,614	54.8°	70.3°	0.0°	70.3°	72°	152,487	2,475	12.71			29%	-
65-69/60	67.5	28.7	26.4	622	9,750	5.502	3,422	1,729	54.8°	71.2°	0.0°	71.2°	72°	172,714	2,747	14.39			32%	-
70-74/63	72.5	31.0	26.6	431	10,400	6.633	2,859	1,844	54.8°	72.1°	0.0°	72.1°	72°	194,186	2,406	16.18			36%	-
75-79/66	77.5	32.4	26.8	416	11,050	7.908	3,290	1,959	54.8°	73.0°	0.0°	73.0°	72°	216,903	2,897	18.08			41%	-
80-84/69	82.5	33.8	27.0	265	11,700	9.333	2,473	2,075	54.8°	73.9°	0.0°	73.9°	72°	240,864	2,276	20.07			45%	-
85-89/72	87.5	36.5	27.2	106	12,350	10.951	1,161	2,190	54.8°	74.7°	0.0°	74.7°	72°	266,070	1,111	22.17			50%	-
90-94/73	92.5	39.2	27.4	17	13,000	12.669	215	2,305	54.8°	75.6°	0.0°	75.6°	72°	292,521	215	24.38			55%	
				6,570.00			35,880								16,255	24.38				412

Title	**BAS Upgrades & Modifications**
ECM#	**7**
Project:	**SCI Houtzdale**
Site:	**SCI Houtzdale**

CONVERSION FACTORS				Design Conditions		
SLR	**76%**	Sensible	/latent	Supply CFM	8,825	
FANHP (F.L.)	**8.11**	HP@	8,825	Total Cooling	315,750	124,000
RAFHP (F.L.)	**2.20**	HP@	6,520	Sensible Cooling	239,228	
FMEFF	**90%**	Percent		Air Side TD	25.10	
CFMREF	**8,825**	CFM		Supply HP	10.0	
DREFF	**97%**	Percent	(@F.L.)	T.S.P.	3.5	
MINVOL	**3,530**	CFM	CFM	Supply Fan Eff	60%	
Conv. Fact.	6,344	60	0.24	Return CFM	6,520	
Off Coil Conditions	55	22.82		Return T.S.P.	1.5	
Gas (BTU/CCF):	102,800	Heat Pipe Eff.	-	Return Fan HP	3.0	
kW/ton=	0.95			Return Fan Eff	70%	

Existing Operation

Bin DB temp/ WetBulb	Average Temp	enthapy OA btu/lb	enthapy Mixed Air btu/lb	Bin hrs	SA air flow CFM	Fan kW	Fan kWh	OA air flow CFM	Discharge Air Temp	MAT Air Temp	Heat Pipe Air Temp DT °F	MAT Air Temp w/ Hpipe	Space Temp setpoint	Total Cooling BTU/Hr	Total Cooling kW/h/year	Total Cooling Demand Tons	Total Heating BTU/Hr	Total Reheat BTU/Hr	Run Fraction	Existing Heating CCF/year
-15 -11 / -12.6	-12.5	0.0		0	8,825	8.599	-	2,305	75.0°	49.9°	0.0°	49.9°	72°				124,000		100%	-
-10 -6 /-7.1	-7.5	0.0		0	8,825	8.599	-	2,305	75.0°	51.2°	0.0°	51.2°	72°				124,000		100%	-
-5 -1 /-2.9	-2.5	0.0		0	8,825	8.599	-	2,305	75.0°	52.5°	0.0°	52.5°	72°				124,000		100%	-
0-4/1	2.5	0.0		2	8,825	8.599	17	2,305	75.0°	53.8°	0.0°	53.8°	72°				124,000		100%	3.09
5-9/6	7.5	2.9		5	8,825	8.599	43	2,305	75.0°	55.2°	0.0°	55.2°	72°				124,000		100%	7.73
10-14/11	12.5	4.2		77	8,825	8.599	662	2,305	75.0°	56.5°	0.0°	56.5°	72°				124,000		100%	119.08
15-19/15	17.5	5.7		270	8,825	8.599	2,322	2,305	75.0°	57.8°	0.0°	57.8°	72°				124,000		100%	417.54
20-24/20	22.5	7.3		452	8,825	8.599	3,887	2,305	75.0°	59.1°	0.0°	59.1°	72°				124,000		100%	698.99
25-29/25	27.5	9.0		411	8,825	8.599	3,534	2,305	75.0°	60.4°	0.0°	60.4°	72°				124,000		100%	635.59
30-34/30	32.5	11.1		897	8,825	8.599	7,714	2,305	75.0°	61.7°	0.0°	61.7°	72°				124,000		100%	1,387.16
35-39/34	37.5	12.8		808	8,825	8.599	6,948	2,305	75.0°	63.0°	0.0°	63.0°	72°				114,477		92%	1,064.98
40-44/38	42.5	15.1		722	8,825	8.599	6,209	2,305	75.0°	64.3°	0.0°	64.3°	72°		-	-	102,030		82%	755.94
45-49/42	47.5	17.0		512	8,825	8.599	4,403	2,305	75.0°	65.6°	0.0°	65.6°	72°		-	-	89,583		35%	200.21
50-54/47	52.5	19.7	25.3	659	8,825	8.599	5,667	2,305	54.5°	66.9°	0.0°	66.9°	72°	118,249	925	9.85	-		15%	-
55-59/52	57.5	22.9	25.6	829	8,825	8.599	7,129	2,305	54.5°	68.2°	0.0°	68.2°	72°	130,696	3,550	10.89	-		41%	-
60-64/56	62.5	25.7	26.0	1010	8,825	8.599	8,685	2,305	54.5°	69.5°	0.0°	69.5°	72°	143,143	5,189	11.93	-		45%	-
65-69/60	67.5	28.7	26.3	812	8,825	8.599	6,983	2,305	54.5°	70.8°	0.0°	70.8°	72°	155,590	4,929	12.97			49%	-
70-74/63	72.5	31.0	26.6	470	8,825	8.599	4,042	2,305	54.5°	72.1°	0.0°	72.1°	72°	168,037	3,327	14.00			53%	-
75-79/66	77.5	32.4	26.9	436	8,825	8.599	3,749	2,305	54.5°	73.4°	0.0°	73.4°	72°	180,484	3,561	15.04			57%	-
80-84/69	82.5	33.8	27.2	265	8,825	8.599	2,279	2,305	54.5°	74.7°	0.0°	74.7°	72°	192,931	2,473	16.08			61%	-
85-89/72	87.5	36.5	27.5	106	8,825	8.599	912	2,305	54.5°	76.0°	0.0°	76.0°	72°	205,378	1,121	17.11			65%	-
90-94/73	92.5	39.2	27.9	17	8,825	8.599	146	2,305	54.5°	77.4°	0.0°	77.4°	72°	217,825	202	18.15			69%	
				8,760.00			75,330								25,278	18.15				5,290

CONVERSION FACTORS				Design Conditions		
	76%	Sensible	/latent	Supply CFM	8,825	
FANHP (F.L.)	**8.11**	HP@	8,825	Total Cooling	315,750	124,000
RAFHP (F.L.)	**2.20**	HP@	6,520	Sensible Cooling	239,228	
FMEFF	**90%**	Percent		Air Side TD	25.10	
CFMREF	**8,825**	CFM		Supply HP	10.00	
DREFF	**97%**	Percent	(@F.L.)	T.S.P.	3.5	
MINVOL	**3,530**	CFM	CFM	Supply Fan Eff	60%	
Conv. Fact.	6,344	60	0.24	Return CFM	6,520	
Off Coil Conditions	55	22.82	28	Return T.S.P.	1.5	
Gas (BTU/CCF):	102,800	Heat Pipe Eff.	-	Return Fan HP	3.0	
kW/ton=	0.95			Return Fan Eff	70%	

Proposed Operation

Bin DB temp/ WetBulb	Average Temp	enthapy OA btu/lb	enthapy Mixed Air btu/lb	Bin hrs	SA air flow CFM	Fan kW	Fan kWh	OA air flow CFM	Discharge Air Temp	MAT Air Temp	Heat Pipe Air Temp DT °F	MAT Air Temp w/ Hpipe	Space Temp setpoint	Total Cooling BTU/Hr	Total Cooling kW/h/year	Total Cooling Demand Tons	Total Heating BTU/Hr	Total Reheat BTU/Hr	Run Fraction	Proposed Heating CCF/year
-15 -11 / -12.6	-12.5	0.0		0	8,825	8.599	-	2,305	75.0°	49.9°	0.0°	49.9°	72°				124,000		100%	-
-10 -6 /-7.1	-7.5	0.0		0	8,825	8.599	-	2,305	75.0°	51.2°	0.0°	51.2°	72°				124,000		100%	-
-5 -1 /-2.9	-2.5	0.0		0	8,825	8.599	-	2,305	75.0°	52.5°	0.0°	52.5°	72°				124,000		100%	-
0-4/1	2.5	0.0		2	8,825	8.599	17	2,305	75.0°	53.8°	0.0°	53.8°	72°				124,000		100%	3.09
5-9/6	7.5	2.9		3	8,825	8.599	26	2,305	74.0°	55.2°	0.0°	55.2°	72°				124,000		100%	4.64
10-14/11	12.5	4.2		42	8,825	8.599	361	2,305	73.0°	56.5°	0.0°	56.5°	72°				124,000		100%	64.95
15-19/15	17.5	5.7		179	8,825	8.599	1,539	2,305	72.0°	57.8°	0.0°	57.8°	72°				124,000		100%	276.81
20-24/20	22.5	7.3		325	8,825	8.599	2,795	2,305	71.0°	59.1°	0.0°	59.1°	72°				113,694		100%	460.82
25-29/25	27.5	9.0		303	8,825	8.599	2,606	2,305	70.0°	60.4°	0.0°	60.4°	72°				91,716		100%	346.58
30-34/30	32.5	11.1		628	8,825	8.599	5,400	2,305	69.0°	61.7°	0.0°	61.7°	72°				69,738		100%	546.19
35-39/34	37.5	12.8		590	8,825	8.599	5,074	2,305	68.0°	63.0°	0.0°	63.0°	72°				47,760		92%	324.44
40-44/38	42.5	15.1		505	8,825	8.599	4,343	2,305	67.0°	64.3°	0.0°	64.3°	72°				25,782		82%	133.61
45-49/42	47.5	17.0		386	8,825	8.599	3,319	2,305	66.0°	65.6°	0.0°	65.6°	72°				3,804		35%	6.41
50-54/47	52.5	19.7	25.3	469	8,825	8.599	4,033	2,305.00	54.5°	66.9°	0.0°	66.9°	72°	118,249	659	9.85			15%	-
55-59/52	57.5	22.9	25.6	562	8,825	8.599	4,833	2,305.00	54.5°	68.2°	0.0°	68.2°	72°	130,696	2,407	10.89			41%	-
60-64/56	62.5	25.7	26.0	719	8,825	8.599	6,183	2,305.00	54.5°	69.5°	0.0°	69.5°	72°	143,143	3,694	11.93			45%	-
65-69/60	67.5	28.7	26.3	622	8,825	8.599	5,349	2,305	54.5°	70.8°	0.0°	70.8°	72°	155,590	3,775	12.97			49%	-
70-74/63	72.5	31.0	26.6	431	8,825	8.599	3,706	2,305	54.5°	72.1°	0.0°	72.1°	72°	168,037	3,051	14.00			53%	-
75-79/66	77.5	32.4	26.9	416	8,825	8.599	3,577	2,305	54.5°	73.4°	0.0°	73.4°	72°	180,484	3,398	15.04			57%	-
80-84/69	82.5	33.8	27.2	265	8,825	8.599	2,279	2,305	54.5°	74.7°	0.0°	74.7°	72°	192,931	2,473	16.08			61%	-
85-89/72	87.5	36.5	27.5	106	8,825	8.599	912	2,305	54.5°	76.0°	0.0°	76.0°	72°	205,378	1,121	17.11			65%	-
90-94/73	92.5	39.2	27.9	17	8,825	8.599	146	2,305	54.5°	77.4°	0.0°	77.4°	72°	217,825	202	18.15			69%	
				6,570.00			56,498								20,780	18.15				2,168

Title	**BAS Upgrades & Modifications**
ECM#	**7**
Project:	**SCI Houtzdale**
Site:	**SCI Houtzdale**

CONVERSION FACTORS				Design Conditions		
SLR	**74%**	Sensible	/latent	Supply CFM	15,350	
FANHP (F.L.)	**14.11**	HP@	15,350	Total Cooling	578,250	150,000
RAFHP (F.L.)	**4.41**	HP@	13,045	Sensible Cooling	426,055	
FMEFF	**91%**	Percent		Air Side TD	25.70	
CFMREF	**15,350**	CFM		Supply HP	20.0	
DREFF	**97%**	Percent	(@F.L.)	T.S.P.	3.5	
MINVOL	**6,140**	CFM	CFM	Supply Fan Eff	60%	
Conv. Fact.	6,344	60	0.24	Return CFM	13,045	
Off Coil Conditions	54	22.94		Return T.S.P.	1.5	
Gas (BTU/CCF):	102,800	Heat Pipe Eff.	-	Return Fan HP	5.0	
kW/ton=	0.95			Return Fan Eff	70%	

Existing Operation

Bin DB temp/ WetBulb	Average Temp	enthapy OA btu/lb	enthapy Mixed Air btu/lb	Bin hrs	SA air flow CFM	Fan kW	Fan kWh	OA air flow CFM	Discharge Air Temp	MAT Air Temp	Heat Pipe Air Temp DT °F	MAT Air Temp w/ Hpipe	Space Temp setpoint	Total Cooling BTU/Hr	Total Cooling kW/h/year	Total Cooling Demand Tons	Total Heating BTU/Hr	Total Reheat BTU/Hr	Run Fraction	Existing Heating CCF/year
-15 -11 / -12.6	-12.5	0.0		0	15,350	15.271	-	2,305	75.0°	59.3°	0.0°	59.3°	72°				150,000		100%	-
-10 -6 /-7.1	-7.5	0.0		0	15,350	15.271	-	2,305	75.0°	60.1°	0.0°	60.1°	72°				150,000		100%	-
-5 -1 /-2.9	-2.5	0.0		0	15,350	15.271	-	2,305	75.0°	60.8°	0.0°	60.8°	72°				150,000		100%	-
0-4/1	2.5	0.0		2	15,350	15.271	31	2,305	75.0°	61.6°	0.0°	61.6°	72°				150,000		100%	3.74
5-9/6	7.5	2.9		5	15,350	15.271	76	2,305	75.0°	62.3°	0.0°	62.3°	72°				150,000		100%	9.35
10-14/11	12.5	4.2		77	14,583	14.780	1,138	2,190	75.0°	63.1°	0.0°	63.1°	72°				150,000		100%	144.04
15-19/15	17.5	5.7		270	13,815	14.260	3,850	2,075	75.0°	63.8°	0.0°	63.8°	72°				150,000		100%	505.09
20-24/20	22.5	7.3		452	13,048	13.740	6,211	1,959	75.0°	64.6°	0.0°	64.6°	72°				147,015		98%	812.24
25-29/25	27.5	9.0		411	12,280	13.209	5,429	1,844	75.0°	65.3°	0.0°	65.3°	72°				128,410		86%	563.46
30-34/30	32.5	11.1		897	11,513	12.667	11,362	1,729	75.0°	66.1°	0.0°	66.1°	72°				111,049		74%	919.69
35-39/34	37.5	12.8		808	10,745	12.111	9,786	1,614	75.0°	66.8°	0.0°	66.8°	72°				94,933		63%	605.43
40-44/38	42.5	15.1		722	9,978	11.540	8,332	1,498	75.0°	67.6°	0.0°	67.6°	72°		-	-	80,061		53%	384.77
45-49/42	47.5	17.0		512	9,210	10.956	5,610	1,383	75.0°	68.3°	0.0°	68.3°	72°		-	-	66,435		35%	148.47
50-54/47	52.5	19.7	25.8	659	9,210	10.956	7,220	1,383	54.0°	69.1°	0.0°	69.1°	72°	149,916	1,173	12.49	-		15%	-
55-59/52	57.5	22.9	26.0	829	9,978	11.540	9,567	1,498	54.0°	69.8°	0.0°	69.8°	72°	170,500	3,299	14.21	-		29%	-
60-64/56	62.5	25.7	26.2	1010	10,745	12.111	12,232	1,614	54.0°	70.6°	0.0°	70.6°	72°	192,328	5,115	16.03	-		33%	-
65-69/60	67.5	28.7	26.4	812	11,513	12.667	10,286	1,729	54.0°	71.3°	0.0°	71.3°	72°	215,401	5,158	17.95			37%	-
70-74/63	72.5	31.0	26.6	470	12,280	13.209	6,208	1,844	54.0°	72.1°	0.0°	72.1°	72°	239,719	3,698	19.98			41%	-
75-79/66	77.5	32.4	26.8	436	13,048	13.740	5,991	1,959	54.0°	72.8°	0.0°	72.8°	72°	265,281	4,201	22.11			46%	-
80-84/69	82.5	33.8	26.9	265	13,815	14.260	3,779	2,075	54.0°	73.6°	0.0°	73.6°	72°	292,088	3,095	24.34			51%	-
85-89/72	87.5	36.5	27.1	106	14,583	14.780	1,567	2,190	54.0°	74.3°	0.0°	74.3°	72°	320,140	1,487	26.68			55%	-
90-94/73	92.5	39.2	27.3	17	15,350	15.271	260	2,305	54.0°	75.1°	0.0°	75.1°	72°	349,437	284	29.12			60%	-
				8,760.00			108,933								27,511	29.12				4,096

CONVERSION FACTORS				Design Conditions		
	74%	Sensible	/latent	Supply CFM	15,350	
FANHP (F.L.)	**14.11**	HP@	15,350	Total Cooling	578,250	150,000
RAFHP (F.L.)	**4.41**	HP@	13,045	Sensible Cooling	426,055	
FMEFF	**91%**	Percent		Air Side TD	25.70	
CFMREF	**15,350**	CFM		Supply HP	20.00	
DREFF	**97%**	Percent	(@F.L.)	T.S.P.	3.5	
MINVOL	**6,140**	CFM	CFM	Supply Fan Eff	60%	
Conv. Fact.	6,344	60	0.24	Return CFM	13,045	
Off Coil Conditions	54	22.94	28	Return T.S.P.	1.5	
Gas (BTU/CCF):	102,800	Heat Pipe Eff.	-	Return Fan HP	5.0	
kW/ton=	0.95			Return Fan Eff	70%	

Proposed Operation

Bin DB temp/ WetBulb	Average Temp	enthapy OA btu/lb	enthapy Mixed Air btu/lb	Bin hrs	SA air flow CFM	Fan kW	Fan kWh	OA air flow CFM	Discharge Air Temp	MAT Air Temp	Heat Pipe Air Temp DT °F	MAT Air Temp w/ Hpipe	Space Temp setpoint	Total Cooling BTU/Hr	Total Cooling kW/h/year	Total Cooling Demand Tons	Total Heating BTU/Hr	Total Reheat BTU/Hr	Run Fraction	Proposed Heating CCF/year
-15 -11 / -12.6	-12.5	0.0		0	15,350	15.077	-	2,305	75.0°	59.3°	0.0°	59.3°	72°				150,000		100%	-
-10 -6 /-7.1	-7.5	0.0		0	15,350	15.077	-	2,305	75.0°	60.1°	0.0°	60.1°	72°				150,000		100%	-
-5 -1 /-2.9	-2.5	0.0		0	15,350	15.077	-	2,305	75.0°	60.8°	0.0°	60.8°	72°				150,000		100%	-
0-4/1	2.5	0.0		2	15,350	15.077	30	2,305	75.0°	61.6°	0.0°	61.6°	72°				150,000		100%	3.74
5-9/6	7.5	2.9		5	15,350	15.077	75	2,305	74.0°	62.3°	0.0°	62.3°	72°				150,000		100%	9.35
10-14/11	12.5	4.2		77	14,583	13.032	1,003	2,190	73.0°	63.1°	0.0°	63.1°	72°				150,000		100%	144.04
15-19/15	17.5	5.7		270	13,815	11.108	2,999	2,075	72.0°	63.8°	0.0°	63.8°	72°				122,105		100%	411.16
20-24/20	22.5	7.3		452	13,048	9.411	4,254	1,959	71.0°	64.6°	0.0°	64.6°	72°				90,650		98%	500.83
25-29/25	27.5	9.0		411	12,280	7.894	3,244	1,844	70.0°	65.3°	0.0°	65.3°	72°				62,098		86%	272.48
30-34/30	32.5	11.1		897	11,513	6.547	5,873	1,729	69.0°	66.1°	0.0°	66.1°	72°				36,448		74%	301.86
35-39/34	37.5	12.8		808	10,745	5.359	4,330	1,614	68.0°	66.8°	0.0°	66.8°	72°				13,701		63%	87.38
40-44/38	42.5	15.1		722	9,978	4.320	3,119	1,498	67.0°	67.6°	0.0°	67.6°	72°				-		53%	-
45-49/42	47.5	17.0		512	9,210	3.427	1,755	1,383	66.0°	68.3°	0.0°	68.3°	72°				-		35%	-
50-54/47	52.5	19.7	25.8	659	9,210	3.427	2,259	1,383	54.0°	69.1°	0.0°	69.1°	72°	149,916	1,173	12.49			15%	-
55-59/52	57.5	22.9	26.0	829	9,978	4.320	3,582	1,498	54.0°	69.8°	0.0°	69.8°	72°	170,500	3,299	14.21			29%	-
60-64/56	62.5	25.7	26.2	1010	10,745	5.359	5,413	1,614	54.0°	70.6°	0.0°	70.6°	72°	192,328	5,115	16.03			33%	-
65-69/60	67.5	28.7	26.4	812	11,513	6.547	5,317	1,729	54.0°	71.3°	0.0°	71.3°	72°	215,401	5,158	17.95			37%	-
70-74/63	72.5	31.0	26.6	470	12,280	7.894	3,710	1,844	54.0°	72.1°	0.0°	72.1°	72°	239,719	3,698	19.98			41%	-
75-79/66	77.5	32.4	26.8	436	13,048	9.411	4,103	1,959	54.0°	72.8°	0.0°	72.8°	72°	265,281	4,201	22.11			46%	-
80-84/69	82.5	33.8	26.9	265	13,815	11.108	2,943	2,075	54.0°	73.6°	0.0°	73.6°	72°	292,088	3,095	24.34			51%	-
85-89/72	87.5	36.5	27.1	106	14,583	13.032	1,381	2,190	54.0°	74.3°	0.0°	74.3°	72°	320,140	1,487	26.68			55%	-
90-94/73	92.5	39.2	27.3	17	15,350	15.077	256	2,305	54.0°	75.1°	0.0°	75.1°	72°	349,437	284	29.12			60%	-
				8,760.00			55,648								27,511	29.12				1,731

Equipment Specifications Sheets

ECM #7 Building Automation System Upgrade

EIMK Industrial Ethernet Media Converters

Making the Copper to Fiber Connection

The EIMK Skorpion Media Converter series makes the conversion of an Ethernet copper segment to fiber simple. By operating full-duplex at 100 Mbps provides the highest possible performance on 100 Mbps links. The EIMK is a true media converter and not just a two-port Ethernet switch. Therefore performance is enhanced by not introducing the store-and-forward data latency inherent in a switch. Both multimode and single-mode models are available with SC connectors, ST connectors model is only available in multimode. Fiber distances of up to 15 km are possible with the single-mode model — up to 2 km with the multimode models. On the copper side, both MDI and MDIX ports are available to compliment either an end station port or a switch port.

- Plug-and-Play operation
- 100BASE-TX/100BASE-FX conversion
- Shielded RJ-45 and SC/ST-style fiber optic connectors
- Full-duplex operation
- MDI and MDIX copper ports
- Far End Fault feature

- DIN-rail mounting
- Rugged metal enclosure
- Diagnostic LEDs
- Enhanced EMC compliance
- UL 508 listed, c-UL listed, CE mark
- 24 VAC/VDC powered

Overview

Each of the three models supports full-duplex operation for 100BASE-TX and 100BASE-FX segments. Two models support multimode fiber optic connections: the EIMK-100T/FT makes the fiber optic connection via ST-style connectors, whereas the EIMK-100T/FC does so via SC connectors. The model EIMK-100T/FCS supports single-mode fiber via SC connectors. Maximum distance with 62.5/125 µm multimode fiber cables is 2 km while single-mode fiber can span up to 15 km.

Two RJ-45 connectors (one MDIX port and one MDI port) allow either straight-through or crossover copper cabling. Link and activity LEDs allow troubleshooting on both the copper and fiber sides. Far End Fault feature allows the stations on both ends of the fiber to indicate established link (Link LED on) or indicate if there is a half break or no link (Link LED off). Link LEDs also indicate if a copper Ethernet connection is established. If a half-break or no link on the fiber side occurs, the copper port will also go down. This provides network fault indication on both ends. There must be a valid link on both copper and fiber sides in order for link LEDs to light up solid, indicating a complete connection. Activity (ACT) LEDs indicate data traffic when flashing.

All units mount on TS-35 DIN-rail and operate from either a 24 V AC or DC power source while offering redundant power connections. By incorporating a half-wave rectifier design, the sharing of the power source with other half-wave devices is possible.

Designed for commercial and industrial Ethernet applications, all models comply with EMC immunity and emissions compatibility standards for industrial environments.

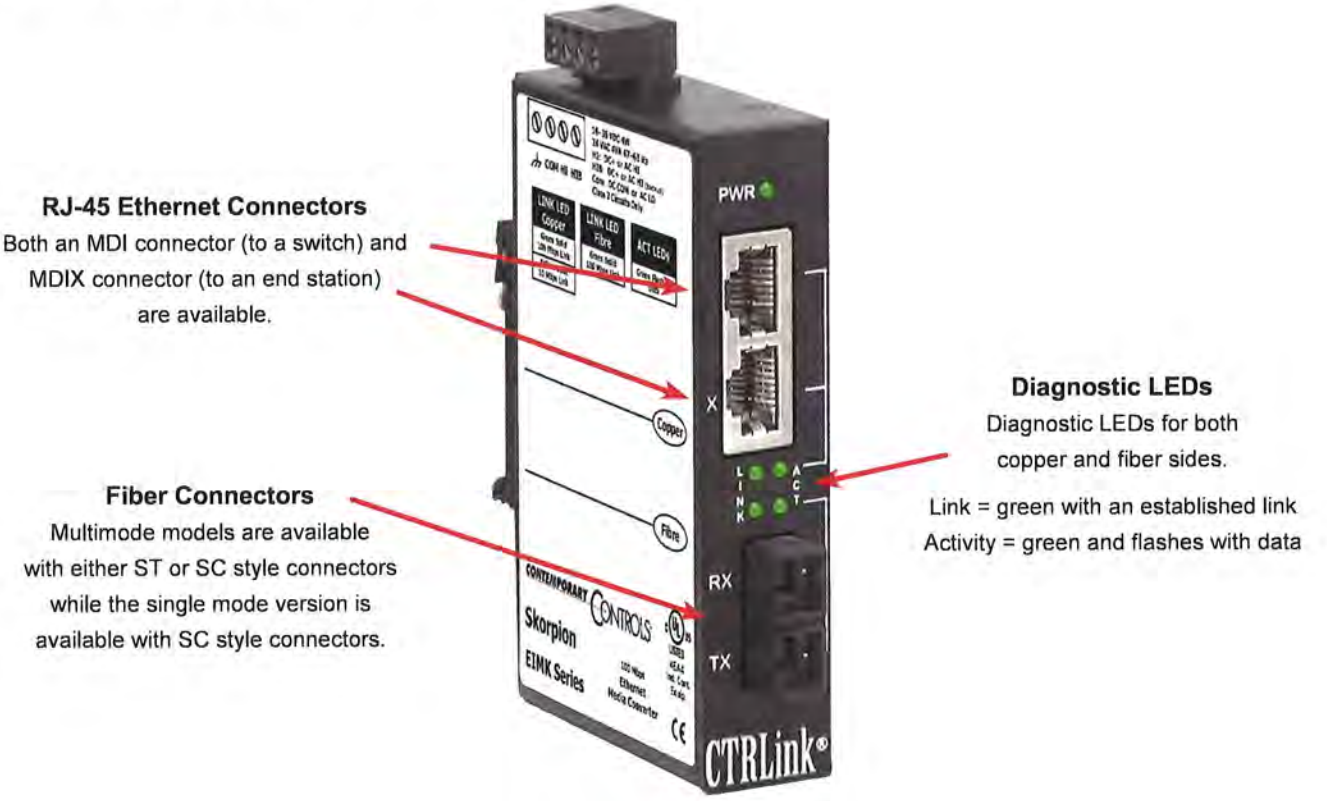

Specifications

Power Requirements	10–36 VDC ±10% 3W or 24 VAC ±10% 5VA 47–63 Hz
Operating Temperature	0°C to 60°C
Storage Temperature	–40°C to 85°C
Relative Humidity	10–95%, non-condensing
Protection	IP30
Mounting	TS-35 DIN-rail
Shipping Weight	1 lb (0.45 kg)

Fiber Transceivers

	TX Power (min)	***RX (min)***	***Wavelength***	***Optical Budget***
Multimode	–19 dBm	–32 dBm	1310 nm	13 dB
Single-mode	–15 dBm	–32 dBm	1310 nm	17 dB

Ethernet Communications

IEEE 802.3 100 Mbps data rate
100BASE-TX using RJ-45 connectors (MDI and MDIX), 100 m (max)
100BASE-FX multimode using SC or ST connectors, 2 km (max)
100BASE-FX single-mode using SC connectors, 15 km (max)

LEDs

Power	Green = power OK
Link	Green = communication established
Activity	Green = data transmissions occurring (flashes)

Regulatory Compliance

CE Mark; CFR 47, Part 15 Class A; RoHS;
UL 508 Industrial Control Equipment

c UL us LISTED

CE

RoHS✓

RJ-45 Connector Pin Assignments

Pin	Function
1	TD+
2	TD–
3	RD+
4	N/C
5	N/C
6	RD–
7	N/C
8	N/C

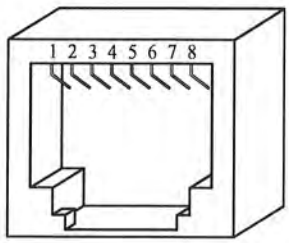

Mechanical Drawing

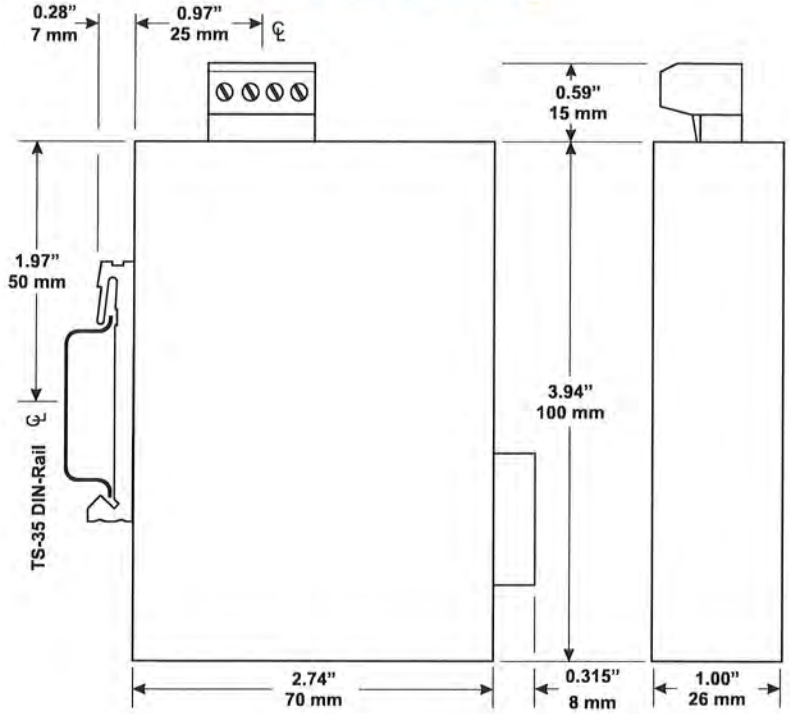

Power Considerations

Applied voltage must be in the specified range and deliver a current commensurate with power consumption. The recommended size for solid power conductors is 16–20 AWG; and for stranded conductors use 16–18 AWG. Zero volts (COM) is isolated from chassis (earth). Input connections are reverse-polarity protected.

Input power: 10–36 VDC or 24 VAC ± 10%, 47–60 Hz.
Connecting chassis to earth or using a backup source is always optional.

All options shown are for use in Class 2 circuits if applied voltage is limited to 30V DC.

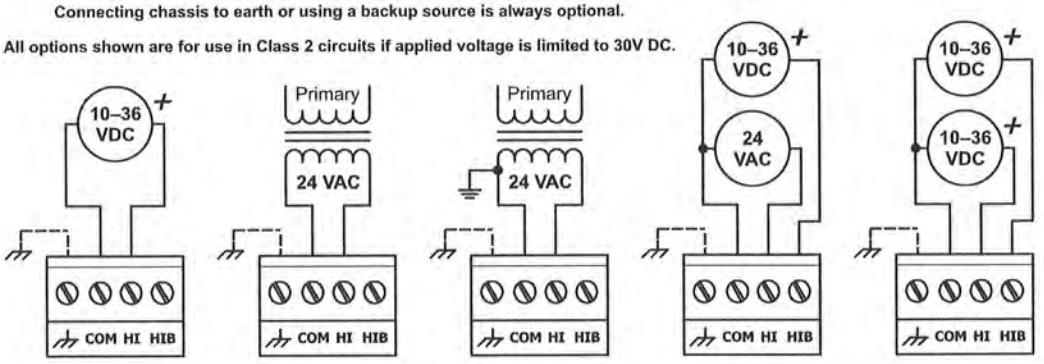

DC Powered | AC Powered | AC Powered with Grounded Secondary | AC Powered with DC Backup | Redundant DC Powered

Typical Media Converter Installations

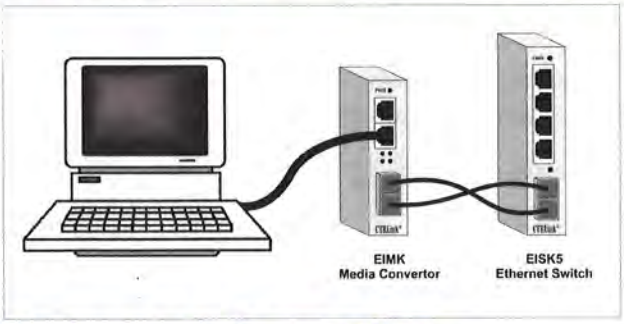

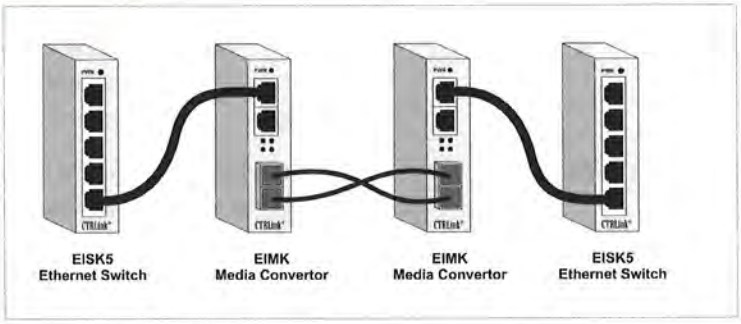

Ordering Information

Model	*Description*
EIMK-100T/FT	Skorpion 100BASE-TX/100BASE-FX MM ST-Fiber Media Converter
EIMK-100T/FC	Skorpion 100BASE-TX/100BASE-FX MM SC-Fiber Media Converter
EIMK-100T/FCS	Skorpion 100BASE-TX/100BASE-FX SM SC-Fiber Media Converter

United States
Contemporary Control Systems, Inc.
2431 Curtiss Street
Downers Grove, IL 60515
USA

Tel: +1 630 963 7070
Fax:+1 630 963 0109
info@ccontrols.com

China
Contemporary Controls (Suzhou) Co. Ltd
11 Huoju Road
Science & Technology Industrial Park
New District, Suzhou
PR China 215009

Tel: +86 512 68095866
Fax: +86 512 68093760
info@ccontrols.com.cn

United Kingdom
Contemporary Controls Ltd
14 Bow Court
Fletchworth Gate
Coventry CV5 6SP
United Kingdom

Tel: +44 (0)24 7641 3786
Fax:+44 (0)24 7641 3923
info@ccontrols.co.uk

Germany
Contemporary Controls GmbH
Fuggerstraße 1 B
04158 Leipzig
Germany

Tel: +49 341 520359 0
Fax: +49 341 520359 16
info@ccontrols.de

www.ccontrols.com

data
SHEET

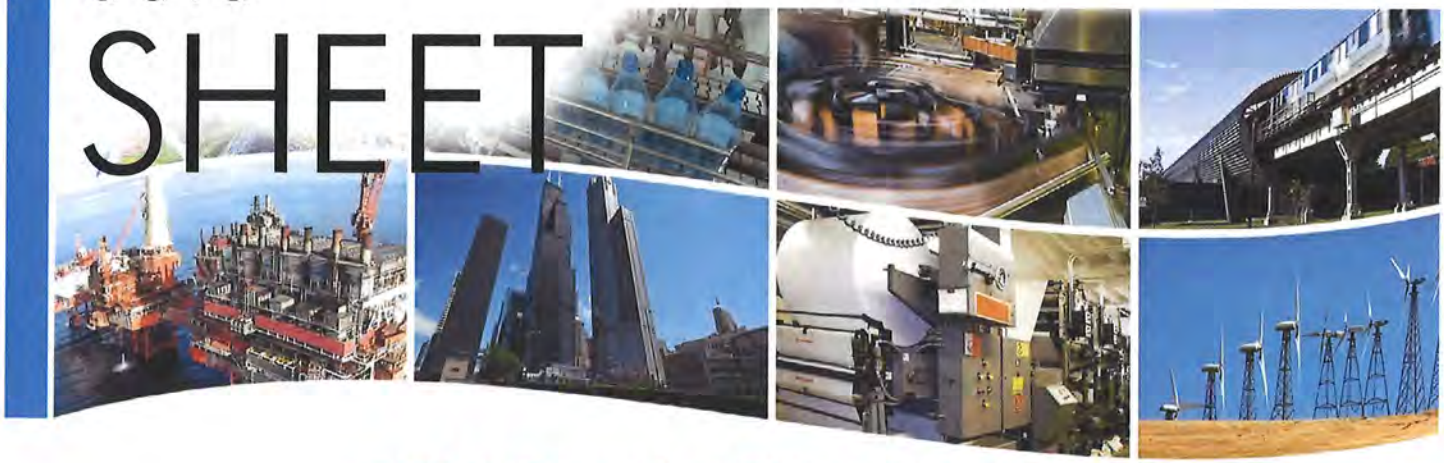

EISK8 Skorpion Fibre Switches

Cost Effective, 100 Mbps-speed — Compact Size

EISK8 Skorpion fibre switches are eight-port unmanaged Ethernet switches that provides 100 Mbps performance on all ports to accommodate a range of control devices and workstations commonly found in an automation project. For 10 Mbps legacy devices, the switches automatically reduce port-speed. These low-cost compact units have a rugged metal enclosure and are intended for installation in control panels using DIN-rail mounting.

These are a plug-and-play Ethernet switches that require no configuration. All copper ports automatically configure their data rate and duplex using the Auto-negotiation protocol. Depending on the capability of the link partner, communication is set at 10 or 100 Mbps and at either half- or full-duplex. Each port accommodates either a straight-through or crossover cable using the Auto-MDIX protocol.

Each unit is powered from a low-voltage source (either AC or DC). Redundant power connections are provided for back-up power schemes. LEDs assist in troubleshooting.

- Plug-and-Play operation
- 10BASE-T/100BASE-TX/100BASE-FX
- Shielded RJ-45 connectors
- Choice of fibre connectors
- Auto-negotiation of speed and duplex
- Auto-MDIX supports cable inversion

- DIN-rail mounting
- Rugged metal enclosure
- Diagnostic LEDs
- Enhanced EMC compliance
- UL 508 listed, c-UL listed, CE mark
- 24 VAC/VDC powered

CTRLink®

Overview

The Skorpion Switch is intended for control panel installations where DIN-rail space is at a premium by requiring a width of only 41 mm of rail space. A metal DIN-rail clip attached to the aluminium enclosure can survive the toughest installation. A writable side label allows the installer an opportunity to document field cabling locations right on the unit.

Each unit is powered from either a 10–36 VDC or 24 VAC (±10%) source. A half-wave rectified low-voltage power supply allows the sharing of power with other 24 VAC/VDC control devices from a common power supply. With redundant power connections, a backup power scheme can be supported. A removable power connector facilitates the servicing of the unit.

LEDs built into each RJ-45 connector indicate data rate and activity on each copper port — greatly assisting in troubleshooting.

Each unit is UL 508 Listed and c-UL Listed for Industrial Control Equipment, complies with CFR 47 Part 15 Class A, carries the CE Mark and each is RoHS compliant.

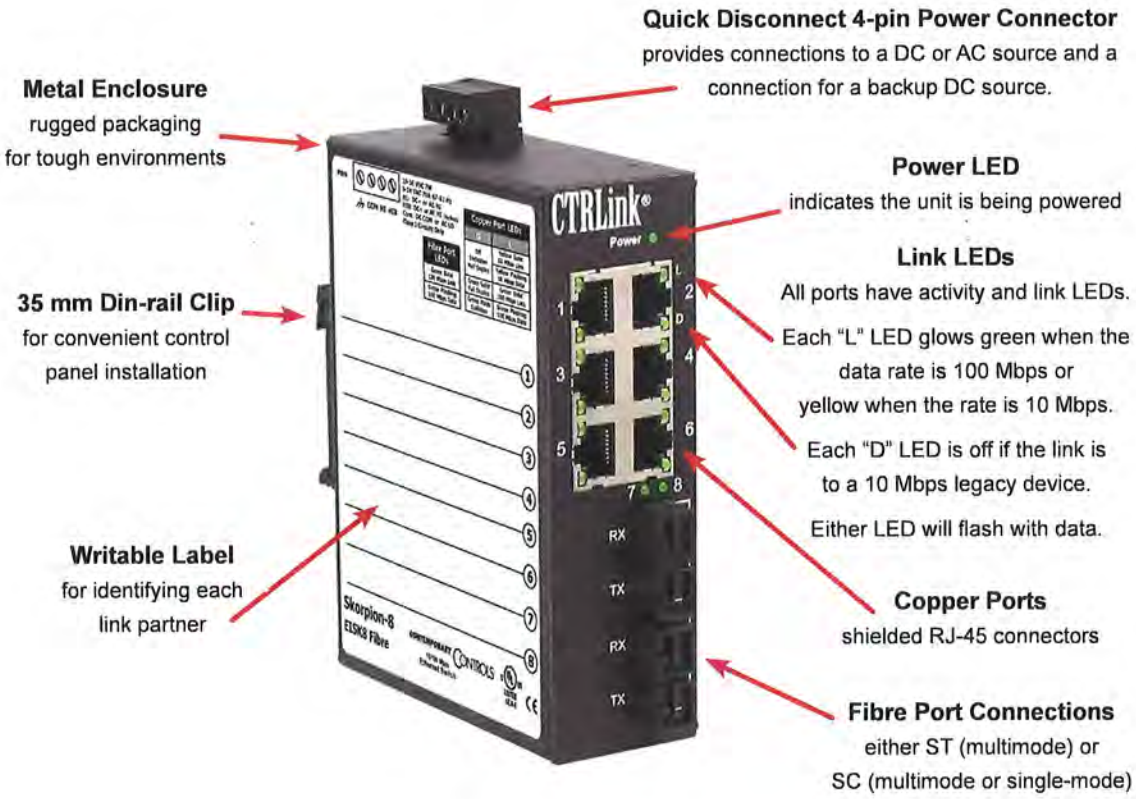

Specifications

Power Requirements	10–36 VDC 6 W or 24 VAC ±10% 12 VA 47–63 Hz
Operating Temperature	0°C to 60°C
Storage Temperature	–40°C to 85°C
Relative Humidity	10–95%, non-condensing
Protection	IP30
Mounting	TS-35 DIN-rail
Shipping Weight	1 lb (0.45 kg)
Ethernet Communications	IEEE 802.3 10/100 Mbps data rate using RJ-45 connectors, 100 m (max)
LEDs	Power — Green = power OK "L" LEDs — Green = 100 Mbps communication established Yellow = 10 Mbps communication established Flashing = data transmissions occurring "D" LEDs — Green = Full-duplex communication established Off = Half-duplex communication established
Regulatory Compliance	CE Mark; CFR 47, Part 15 Class A; RoHS; UL 508 Industrial Control Equipment

RJ-45 Connector Pin Assignments

Pin	Function
1	TD+
2	TD–
3	RD+
4	Not Used
5	Not Used
6	RD–
7	Not Used
8	Not Used

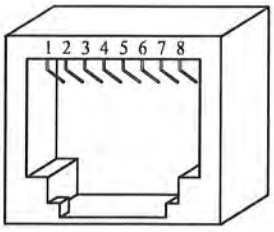

Mechanical Drawing

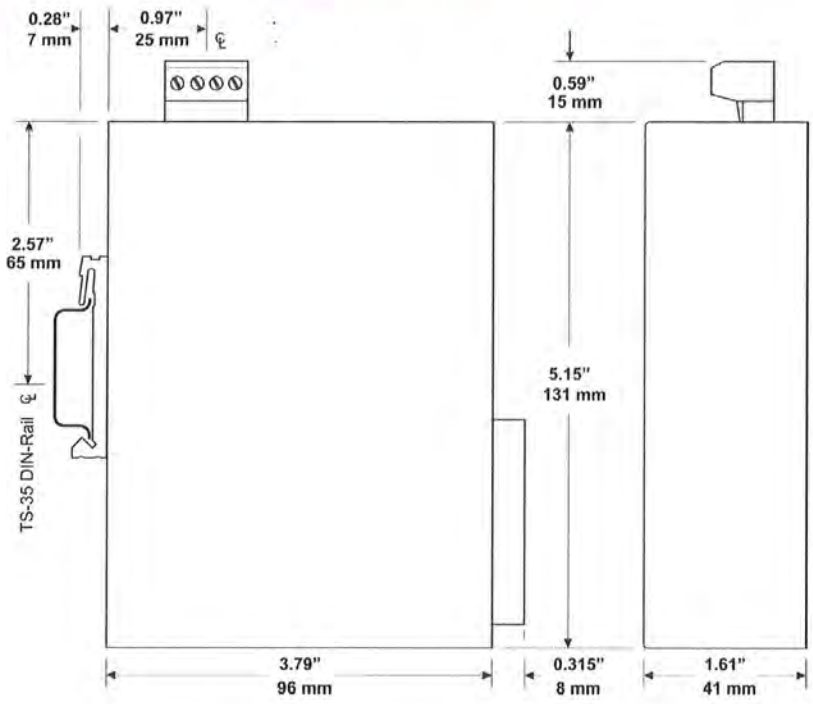

Power Considerations

Applied voltage must be in the specified range and deliver a current commensurate with power consumption. The recommended size for solid power conductors is 16–20 AWG; and for stranded conductors use 16–18 AWG. Zero volts (COM) is isolated from chassis (earth). Input connections are reverse-polarity protected.

Input power: 10–36 VDC or 24 VAC ± 10%, 47–60 Hz.
Connecting chassis to earth or using a backup source is always optional.

All options shown are for use in Class 2 circuits if applied voltage is limited to 30V DC.

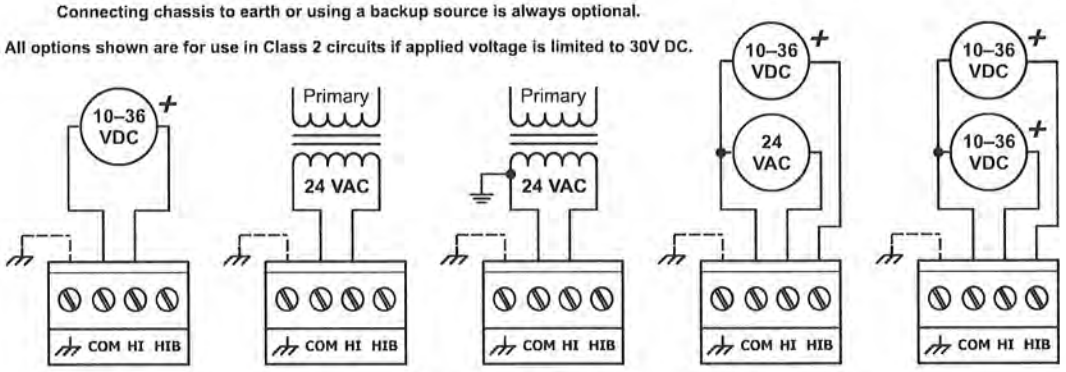

DC Powered | AC Powered | AC Powered with Grounded Secondary | AC Powered with DC Backup | Redundant DC Powered

Typical Switch Installations

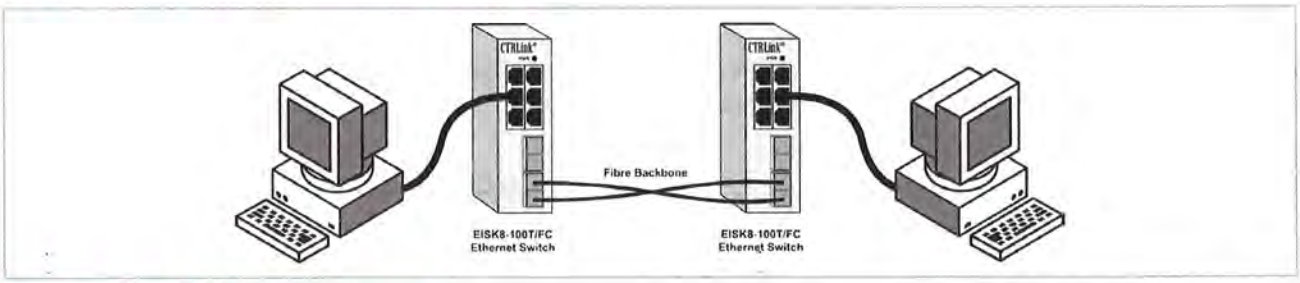

Ordering Information

Model	*Description*
EISK8-100T/FC	Skorpion 6-Port 10/100Mbps 2-Port MM SC-fiber Switch
EISK8-100T/FCS	Skorpion 6-Port 10/100Mbps 2-Port SM SC-fiber Switch
EISK8-100T/FT	Skorpion 6-Port 10/100Mbps 2-Port MM ST-fiber Switch

United States
Contemporary Control Systems, Inc.
2431 Curtiss Street
Downers Grove, IL 60515
USA

Tel: +1 630 963 7070
Fax:+1 630 963 0109

info@ccontrols.com
www.ccontrols.com

China
Contemporary Controls (Suzhou) Co. Ltd
11 Huoju Road
Science & Technology Industrial Park
New District, Suzhou
PR China 215009

Tel: +86 512 68095866
Fax: +86 512 68093760

info@ccontrols.com.cn
www.ccontrols.asia

United Kingdom
Contemporary Controls Ltd
14 Bow Court
Fletchworth Gate
Coventry CV5 6SP
United Kingdom

Tel: +44 (0)24 7641 3786
Fax:+44 (0)24 7641 3923

info@ccontrols.co.uk
www.ccontrols.eu

Germany
Contemporary Controls GmbH
Fuggerstraße 1 B
04158 Leipzig
Germany

Tel: +49 341 520359 0
Fax: +49 341 520359 16

info@ccontrols.de
www.ccontrols.eu

MNB-300 BACnet Unitary Controller

I/A Series Micronet MNB-300

The TAC I/A Series™ MicroNet™ MNB-300 BACnet™ Unitary Controller is an interoperable controller with native BACnet MS/TP communications support. The controller features Sensor Link (S-Link) support, LED status and output indication, screw terminal blocks, as well as a panel mount sub-base with removable electronics module.

When programmed using WorkPlace Tech Tool, the Unitary controller provides a wide range of control strategies for packaged rooftop, heat pump, fan coil, unit ventilator, and similar applications.

Stand Alone or Connected

The TAC I/A Series BACnet Unitary Controller can function either in a standalone mode or as part of a BACnet building automation system (BAS) network.

SPECIFICATIONS

HARDWARE

Dimensions

7.0 in. W x 3.94 in. H x 2.19 in. D

(178 mm x 100 mm x 56 mm)

Enclosure

Optional wall-mount enclosure conforms to NEMA-1 requirements.

Cover meets UL94V-0 flammability ratings.

Mounting

Panel mount.

Wiring Terminals

I/O Points

Fixed screw terminals; up to two AWG #14 (2.08 mm^2) or smaller wire.

Power and MS/TP

Removable screw terminals; single AWG #14 (2.08 mm^2) wire or up to two AWG #18 (0.823 mm^2) or smaller wires.

ELECTRICAL

Power Supply Input

20.4 to 30 Vac, 50/60 Hz.

Maximum Power Consumption

16 VA at 24 Vac.

ENVIRONMENT

Operating Temperature

-40 to 140 °F (-40 to 60 °C)

Shipping and Storage Temperature

-40 to 160 °F (-40 to 71 °C)

Humidity

5 to 95% RH, non-condensing

AGENCY LISTINGS

US

FCC Part 15, Class A

UL 916, File #E71385 Category PAZX

UL 864, Category UUKL, File #S5381 Smoke-Control Equipment

Canadian

UL Listed to Canadian Safety Standards (CAN/CSA 22.2)

CUL Listed to Standards ULC/ORD-C100-92 (Smoke Control System Equipment) and CAN-ULC-S527 (Control Units for Fire Alarm Systems)

Australian

Meets requirements to bear the C-Tick Mark

European Community

EMC Directive 89/336/EEC, EN61326

INPUTS AND OUTPUTS

Universal Inputs (6)

Universal Input characteristics are software-configured to respond to one of the following input types:

10k ohm Thermistor w/ 11k ohm Shunt Resistor

Sensor operating range -40 to 250 °F (-40 to 121 °C) range. TSMN-57011-850, TS-5700-850 Series or equivalent.

Specifications continued on next page.

Schneider Electric

Specifications continued from first page.

1k ohm Balco Input

-40 to 250 °F (-40 to 121 °C) range. TSMN-81011, TS-8000 Series or equivalent.

1k ohm Platinum Input

-40 to 240 °F (-40 to 116 °C) range. TSMN-58011, TS-5800 Series or equivalent.

1k ohm Resistive

0 to 1.5k ohms.

10k ohm Resistive

0 to 10.5k ohms.

Analog Voltage

0 to 5 Vdc.

Analog Current

Range 0 to 20 mA, requires an external 250 ohm shunt resistor (AD-8969-202).

Digital Input

Dry switched contact. Detection of closed switch requires less than 300 ohms. Detection of open switch requires more than 2.5k ohms.

Standard Pulse Input (UI1-UI6)

Minimum Rate

1 pulse per 4 minutes.

Maximum Rate

1 pulse per second.

Fast Pulse Input (UI1)

Minimum Rate

1 pulse per 4 minutes.

Maximum Rate

10 pulses per second.

Digital Outputs - Triac (6)

12 VA at 24 Vac, 50/60 Hz, each output individually isolated.

Universal Outputs (3)

Current

0 to 20 mA (output load from 80 to 550 ohms).

Voltage

0 to 10 V (with external 500 ohms, 1/2 W, 1% resistor).

Capability to Drive Functional Devices

RIBUI1C Relay (UO configured for 0 to 20 mAdc, no external resistor).

BACnet is a registered trademark of ASHRAE. ASHRAE does not endorse, approve, or test products for compliance with ASHRAE standards. Compliance of listed products to the requirements of ASHRAE Standard 135 is the responsibility of BACnet International (BI). BTL is a regstered trademark of BI.

COMMUNICATIONS

BACnet Networks

The TAC I/A Series MicroNet BACnet Unitary Controller incorporates an isolated EIA-485 (formerly RS-485) transceiver for BACnet MS/TP communications at 9.6 up to 76.8 kbaud using standard MS/TP wiring methods. Up to 128 TAC I/A Series MicroNet BACnet controllers can be connected to an MS/TP sub-net without repeaters.

S-Link

The Sensor Link (S-Link) communications wiring provides power and a communication interface for one MN-Sx MicroNet sensor. The various MN-Sx sensors can provide room temperature, room humidity, setpoint adjustment, and occupancy override. This connection uses two-wire, unshielded cable and is not polarity sensitive. Maximum S-Link bus length is 200 ft (61 m).

BACnet COMPLIANCE

BACnet Application Specific Controller (B-ASC).

FEATURES

- The TAC I/A Series MicroNet BACnet Unitary Controller's sequence of operation and BACnet image are fully programmable, using WorkPlace Tech Tool. The controllers can be applied to all common unitary HVAC applications.
- Capability to function in standalone mode or as part of a TAC I/A Series building automation network.
- Integral MS/TP jack for direct connection of PC with WorkPlace Tech Tool.
- Removable electronics module mates with panel-mounted subbase.
- Removable terminals for power and communications to facilitate commissioning.
- Optional rugged, NEMA 1 plenum-rated sheet metal enclosure.
- MS/TP DIP switch addressable.
- Service pin button for BACnet "I am" message broadcast.
- Isolated EIA-485 (formerly RS-485) transceiver for MS/TP communications.
- MS/TP baud rate selection from 9.6 up to 76.8 kbaud.
- LED indication of MS/TP communication activity, controller status, and UO and DO state.
- Firmware upgradeable over the network.
- Support for S-Link Sensor.

© 2009 Sch[illegible]er Electric. All rights reserved.

INPUTS FROM MN-SX I/A SERIES MICRONET SENSORS

Inputs	Description	MN-Sx Sensor
Space Temperature	32 to 122 °F (0 to 50 °C)	MN-S1, MN-S1HT, MN-S2, MN-S2HT, MN-S3, MN-S3HT, MN-S4, MN-S4HT, MN-S4-FCS, MN-S4HT-FCS, MN-S5 and MN-S5HT
Space Humidity	5 to 95% RH, Non-condensing	MN-S1HT, MN-S2HT, MN-S3HT, MN-S4HT, MN-S4HT-FCS, and MN-S5HT
Adjustable Setpoint	Adjustable within limits set by application programming tool	MN-S3, MN-S3HT, MN-S4, MN-S4HT, MN-S4-FCS, MN-S4HT-FCS, MN-S5, and MN-S5HT
Override Pushbutton	For standalone occupancy control or occupancy override	MN-S2, MN-S2HT, MN-S3, MN-S3HT, MN-S4, MN-S4HT, MN-S5, and MN-S5HT
Fan Operation and Speed	Fan mode selection: On/Off, Speed (Low/Medium/High), or Auto	MN-S4, MN-S4HT, MN-S4-FCS, MN-S4HT-FCS, MN-S5, and MN-S5HT
System Mode	System mode selection: Heat, Cool, Off, or Auto	MN-S4, MN-S4HT, MN-S5, and MN-S5HT
Emergency Heat	Emergency heat mode selection: Enable or Disable	MN-S5 and MN-S5HT

MODELS

Part Number	Description	Inputs/Outputs		
		UI	UO	DO (Triac)
MNB-300	TAC I/A Series MicroNet BACnet Unitary Controller	6	3	6

ACCESSORIES

Part Number	Description	Part Number	Description
MNB-300-ENC	Wall-mount enclosure	S-Link Sensors	Temperature and humidity wall sensors with digital communication
MNB-BASE-300	Controller base assembly only		
MNB-CNTLR-300	Controller cover assembly only	TSMN Series	Room temperature sensors

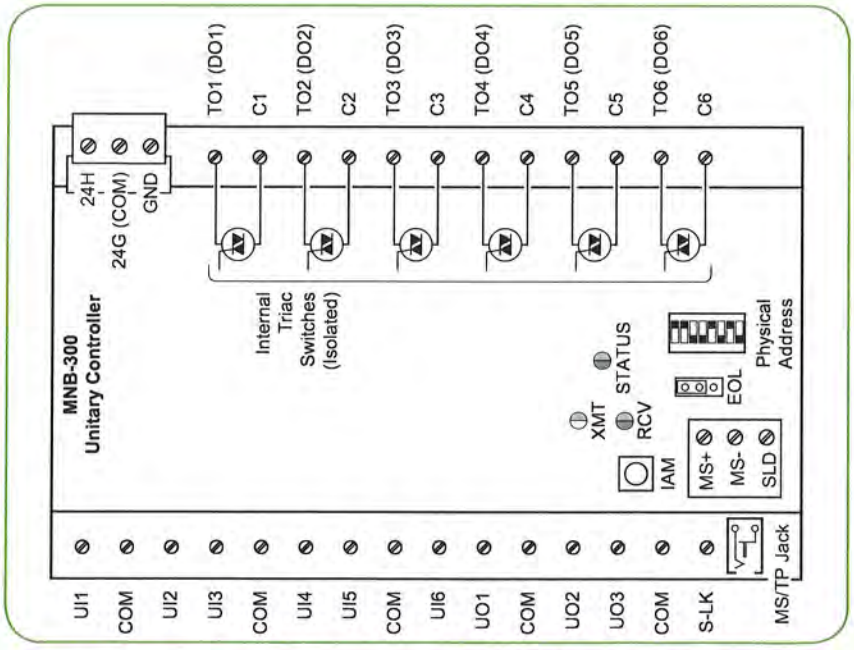

Schneider Electric 1354 Clifford Avenue, P.O. Box 2940, Loves Park, IL 61132-2940, USA 1-888-444-1311 www.schneider-electric.com/buildings

© 2009 Schneider Electric. All rights reserved.

ARCHITECTURE

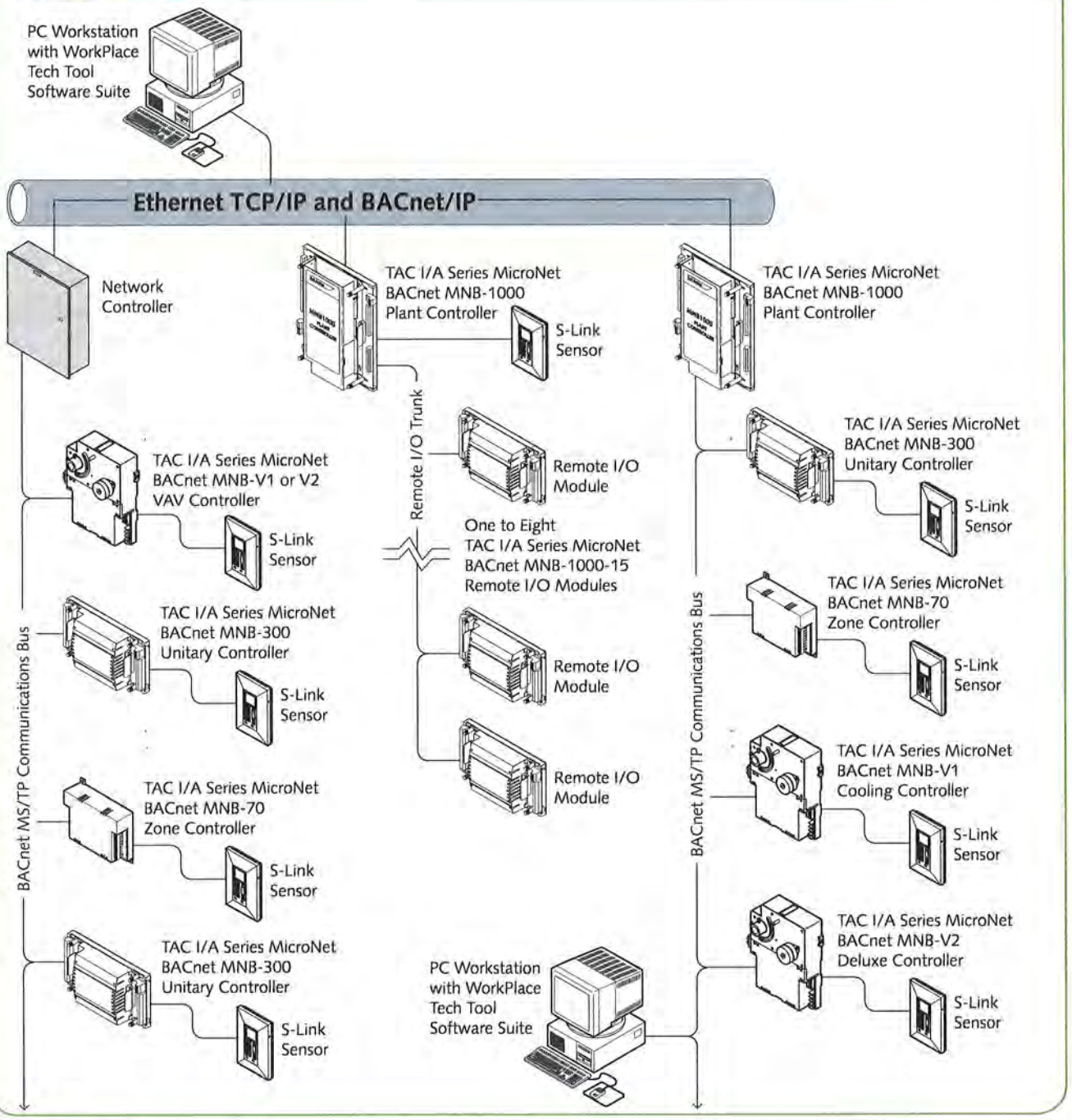

SIGNALING

Distributed, manufactured, and sold by Schneider Electric. I/A Series trademarks are owned by Invensys Systems, Inc. and are used on this product under master license from Invensys. Invensys does not manufacture this product or provide any product warranty or support. For service, support, and warranty information, contact Schneider Electric.

On October 1st, 2009, TAC became the Buildings Business of its parent company Schneider Electric. This document reflects the visual identity of Schneider Electric, however there remain references to TAC as a corporate brand in the body copy. As each document is updated, the body copy will be changed to reflect appropriate corporate brand changes.

All brand names, trademarks and registered trademarks are the property of their respective owners. Information contained within this document is subject to change without notice.

Schneider Electric 1354 Clifford Avenue, P.O. Box 2940, Loves Park, IL 61132-2940, USA 1-888-444-1311 www.schneider-electric.com/buildings

© 2009 Schneider Electric. All rights reserved.

MicroNet BACnet Plant Controller

SPECIFICATIONS

HARDWARE

Dimensions
10-15/16 H x 8-3/8 W x 2-9/32 D in. (278 x 213 x 58 mm).

Enclosure
Optional rugged sheet metal enclosure conforms to NEMA-1.

Mounting
Panel mount.

Power Supply Input
20.4 to 30 Vac, 50/60 Hz.

Power Consumption
50 VA at 24 Vac.

AGENCY LISTINGS

US
FCC Part 15, Class A.
UL 916, File #E71385 Category PAZX
UL 864, Category UUKL, File #S5381 Smoke-Control Equipment

Canadian
UL Listed to Canadian Safety Standards (CAN/CSA 22.2).
CUL Listed to Standards ULC/ORD-C100-92 (Smoke Control System Equipment) and CAN-ULC-S527 (Control Units for Fire Alarm Systems)

Australian
Meets requirements to bear the C-Tick Mark.

European Community
EMC Directive 89/336/EEC
EN61326

MicroNet BACnet Plant Controller MNB-1000

The TAC I/A Series™ MicroNet™ BACnet™ Plant Controller is an interoperable controller with native BACnet/IP, BACnet Ethernet, and MS/TP communications support and routing functionality between physical networks. The controller features: Sensor Link (S-Link) support; remote I/O support; LED status and output indication; two Ethernet ports; screw terminal blocks; and a panel-mount subbase with a removable electronics module.

The Plant Controller's sequence of operation and BACnet image are fully programmable using WorkPlace Tech Tool, and can be applied to a wide range of mechanical equipment. Typical applications include central station air handlers, VAV air handlers, and cooling towers.

The MicroNet BACnet Plant Controller can function either in a standalone mode or as part of a BACnet building automation system (BAS) network. The MNB-1000 is BACnet Testing Laboratories (BTL) listed as a BACnet Application Specific Controller (B-ASC).

AMBIENT LIMITS

Operating Temperature
-40 to 140 °F (-40 to 60 °C).

Shipping and Storage Temperature
-40 to 160 °F (-40 to 71 °C).

Humidity
5 to 95% non-condensing.

WIRING TERMINALS

Remote I/O (IO+, IO-, SLD)
Removable screw terminals; single AWG #14 (2.08 mm²) wire or up to two AWG #18 (0.823 mm²) or smaller wires.

MS/TP (MS+, MS-, SLD)
Removable screw terminals; single AWG #14 (2.08 mm²) wire or up to two AWG #18 (0.823 mm²) or smaller wires.

I/O Points
Fixed screw terminals; single AWG #14 (2.08 mm²) wire or up to two AWG #18 (0.823 mm²) or smaller wires.

Power
Removable screw terminals; up to two AWG #14 (2.08 mm²) or smaller wires.

Continued on next page.

Schneider Electric

Continued from first page.

INPUTS FROM MN-SX MICRONET SENSOR

Space Temperature
32 to 122 °F (0 to 50 °C).

Space Humidity
5 to 95% RH, non-condensing.

Local Setpoint
Adjustable within limits set by application programming tool.

Fan Operation and Speed Mode
On/off, speed (low/medium/high), or auto.

System Mode
Heat, cool, off, or auto.

Emergency Heat
Enable or disable.

UNIVERSAL INPUTS (12)

Universal Input characteristics are software-configured to respond to one of the following input types:

10k ohm Thermistor with 11k ohm Shunt Resistor
Sensor operating range -40 to 250 °F (-40 to 121 °C), model TSMN-57011-850, TS-5700-850 series, or equivalent.

1k ohm Balco
-40 to 250 °F (-40 to 121 °C), model TSMN-81011, TS-8000 series, or equivalent.

1k ohm Platinum
-40 to 240 °F (-40 to 116 °C), model TSMN-58011, TS-5800 series, or equivalent.

1k ohm Resistive
0 to 1500 ohms.

10k ohm Resistive
0 to 10.5k ohms.

Analog Voltage
Range 0 to 5 Vdc.

Analog Current
Range 0 to 20 mA; requires external 250 ohm shunt resistor (AD-8969-202).

Digital
Dry switched contact; detection of closed switch requires less than 300 ohms resistance; detection of open switch requires more than 2.5k ohms.

DIGITAL INPUTS (4)

Dry Switched Contact
Detection of closed switch requires less than 300 ohms resistance; detection of open switch requires more than 2.5k ohms.

FAST PULSE INPUT (DIGITAL INPUT ONLY)

Minimum Rate
1 pulse per 4 minutes.

Maximum Rate
10 pulses per second.

DIGITAL OUTPUTS – TRIAC (8)

12 VA at 24 Vac, 50/60 Hz, each output individually isolated.

UNIVERSAL OUTPUTS (8)

0 to 20 mA
Output load from 80 to 550 ohms.

0 to 10 V
With external 500 ohms, 1/2 W, 1% resistor.

Capable of Driving Functional Devices RIBU1C Relay
UO configured for 0 to 20 mAdc, no external resistor.

20 VDC OUTPUT

20 Vdc ±10% at 100 mA.

OPTIONS

MNB-1000-ENC
Wall-mount enclosure

MNB-BASE-1000
Controller Base assembly only

MNB-CNTLR-1000
Controller assembly only

MNB-15
Remote I/O Module

S-Link Sensors
Temperature and humidity Wall Sensors with digital communication

TSMN Series
Room Temperature Sensors

MODEL

Part Number	Inputs and Outputs[a]			
	UI	DI	UO	DO (Triac)
MNB-1000	12	4	8	8

a. The I/O point count can be greatly expanded with the addition of one to eight Remote I/O Modules, each of which adds 15 I/O points. Refer to the MNB-1000-15 Remote I/O Module sales data sheet, F-27487.

© 2013 Schneider Electric. All rights reserved.

FEATURES

- The MicroNet BACnet Plant Controller's sequence of operation and BACnet image are fully programmable using WorkPlace Tech Tool.
- Capability to function in standalone mode or as part of a TAC I/A Series building automation network.
- Removable electronics module mates with panel-mounted subbase.
- Removable terminals for power and communications, to facilitate commissioning.
- Integral MS/TP jack for direct connection of PC with WorkPlace Tech Tool Suite.
- Optional rugged, NEMA 1 sheet metal enclosure.
- MS/TP DIP switch addressable.
- Service pin button for BACnet "I am" message broadcast.
- Isolated EIA-485 (formerly RS-485) transceiver for MS/TP communications.
- MS/TP baud rate selection from 9.6 up to 76.8 kbaud.
- LED indication of MS/TP and Ethernet IP communication activity, controller status, DO state, and UO state.
- Application-programmable LED provides on/off indication of a user-defined application parameter.
- Firmware upgradeable over the network.
- 72 hour, battery-backed real time clock.
- BBMD, remote connectivity across subnets.
- Support for Remote I/O Modules and S-Link Sensor.
- IP/Ethernet bridge.
- BACnet router functionality.

COMMUNICATIONS

BACnet Networks

The MicroNet BACnet Plant Controller incorporates a fully functional BACnet router between its 3 fully configurable communications ports.

MS/TP

Isolated EIA-485 (formerly RS-485) transceiver, providing support for up to 128 MS/TP devices communicating at 9.6 up to 76.8 kbaud, using standard MS/TP wiring methods.

Ethernet/IP

Dual 10/100 Ethernet ports with modular RJ-45 jacks. Both ports are set to be an Ethernet Bridge, saving on network wiring.

BACnet Ethernet

Standard BACnet Ethernet communications.

BACnet/IP

Communications choices are Standard BACnet/IP, BBMD, or Foreign Device.

S-Link

The Sensor Link (S-Link) communications wiring provides power and a communication interface for one MN-Sx TAC I/A Series MicroNet sensor. The various MN-Sx sensors can provide room temperature, room humidity, setpoint adjustment, and occupancy override. This connection uses two-wire, unshielded cable and is not polarity sensitive. Maximum S-Link bus length is 200 ft (61 m).

Remote I/O

The remote I/O communications wiring provides an interface for one to eight optional MNB-1000-15 Remote I/O Modules, which can be used to expand upon the Plant Controller's onboard I/O.

BACnet is a registered trademark of ASHRAE®. ASHRAE does not endorse, approve, or test products for compliance with ASHRAE standards. Compliance of listed products to the requirements of ASHRAE Standard 135 is the responsibility of BACnet International (BI). BTL is a registered trademark of BI.

CONTROLLER TERMINALS

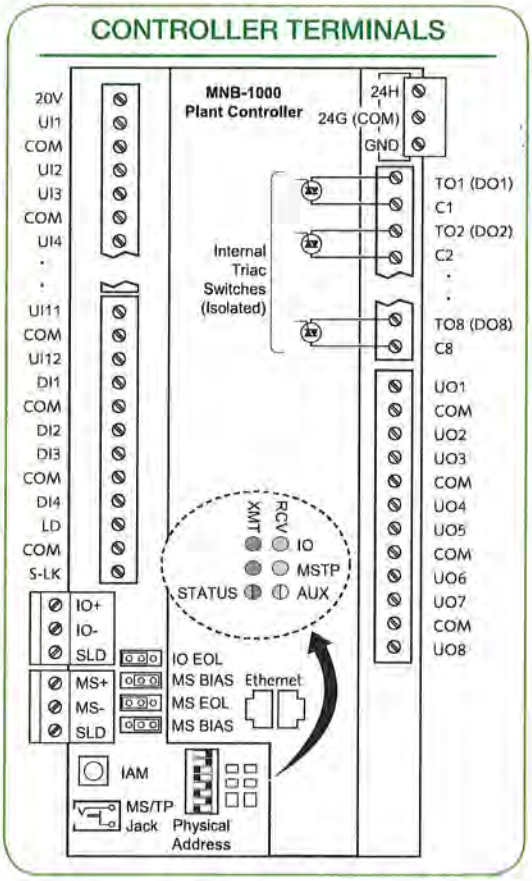

© 2013 Schneider Electric. All rights reserved.

TAC I/A SERIES BACnet TOPOLOGY

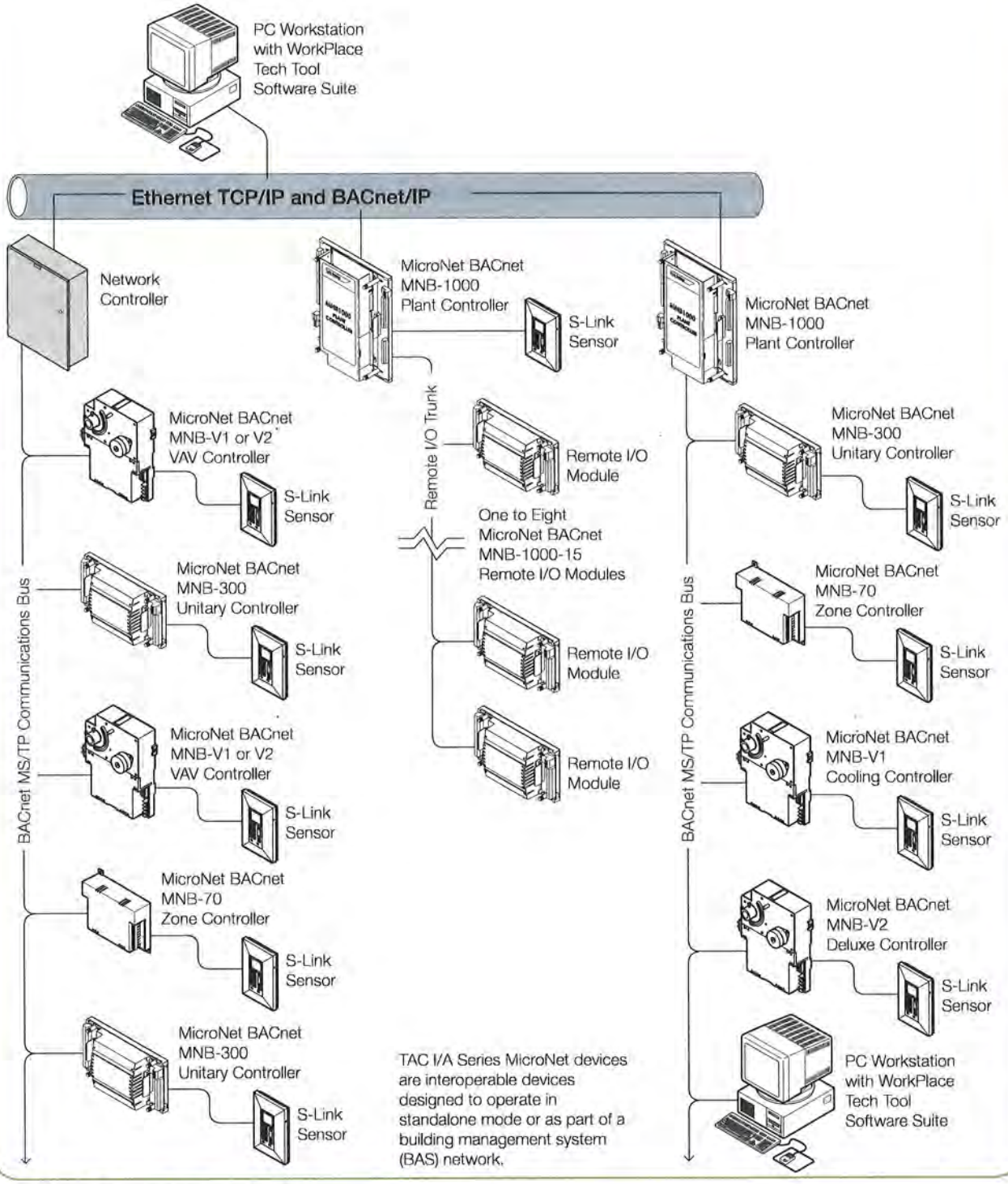

Distributed, manufactured, and sold by Schneider Electric. I/A Series trademarks are owned by Invensys Systems, Inc. and are used on this product under master license from Invensys. Invensys does not manufacture this product or provide any product warranty or support. For service, support, and warranty information, contact Schneider Electric.

All brand names, trademarks and registered trademarks are the property of their respective owners. Information contained within this document is subject to change without notice. All rights reserved.

Schneider Electric 1354 Clifford Avenue, P.O. Box 2940, Loves Park, IL 61132-2940, USA 1-888-444-1311 www.schneider-electric.com

© 2013 Schneider Electric. All rights reserved.

MNB-70 BACnet Zone Controller

BACnet Zone Controller

The TAC I/A Series® MicroNet BACnet Zone Controller is an interoperable controller with native BACnet MS/TP communications support. The controller features: three universal inputs; three digital (Triac) outputs; one universal output; Sensor Link (S-Link) support; LED status indication; and an "I-Am" button.

When programmed using WorkPlace Tech Tool, the Zone Controller provides a wide range of control strategies for applications such as unit heaters, cabinet heaters, fan coil units, small unit ventilators, heat pumps, and single/dual loop control strategies.

The MicroNet BACnet Zone Controller can function either in a standalone mode or as part of a BACnet building automation system (BAS) network.

SPECIFICATIONS

HARDWARE

Dimensions
3-5/8 H x 5 W x 1-19/32 D in
(92 x 127 x 41 mm).

Enclosure
Conforms to NEMA-1. Meets UL 94-5VA flammability ratings for plenum application use.

Mounting
Panel mount.

Power Supply Input
20.4 to 30 Vac, 50/60 Hz.

Power Consumption
15 VA at 24 Vac plus DO loads.

AGENCY LISTINGS

US
UL 916, File #E71385 Category PAZX FCC Part 15, Class A.

Canadian
UL Listed to Canadian Safety Standards (CAN/CSA 22.2).

Australian
Meets requirements to bear the C-Tick Mark.

BTL Listing
B-ASC

European Community
EMC Directive 89/336/EEC
EN61326

AMBIENT LIMITS

Operating Temperature
32 to 131 °F (0 to 55 °C).

Shipping and Storage Temperature
-40 to 160 °F (-40 to 71 °C).

Humidity
5 to 95% non-condensing.

WIRING TERMINALS

Fixed Screw terminals
single AWG #14 (2.08 mm^2) wire or up to two AWG #18 (0.823 mm^2) or smaller wires.

INPUTS FROM MN-SX MICRONET™ SENSOR

Space Temperature
32 to 122 °F (0 to 50 °C).

Space Humidity
5 to 95% RH, non-condensing.

Local Setpoint
Adjustable within limits set by application programming tool.

Override Pushbutton
For standalone occupancy control or occupancy override.

Specifications continued on next page.

Schneider Electric

Specifications continued from first page.

Fan Operation and Speed Mode
On/off, speed (low/medium/high), or auto.

System Mode
Heat, cool, off, or auto.

Emergency Heat
Enable or disable.

UNIVERSAL INPUTS (3)
Universal Input characteristics are software-configured to respond to one of the following input types:

10 k ohm Thermistor with 11 k ohm Shunt Resistor
Sensor operating range -40 to 250 °F (-40 to 121 °C), TAC model TSMN-57011-850, TS-5700-850 series, or equivalent.

1 k ohm Balco
-40 to 250 °F (-40 to 121 °C), TAC model TSMN-81011; TS-8000 series, or equivalent.

1 k ohm Platinum
-40 to 240 °F (-40 to 116 °C), TAC model TSMN-58011, TS-5800 series, or equivalent.

1 k ohm Resistive
0 to 1500 ohms.

10 k ohm Resistive
0 to 10.5 k ohms.

Analog Voltage
Range 0 to 5 Vdc.

Analog Current
Range 0 to 20 mA, requires external 250 ohm shunt resistor (AD-8969-202).

Digital
Dry switched contact; detection of closed switch requires less than 300 ohms resistance; detection of open switch requires more than 2.5 k ohms.

Standard Pulse Input
Minimum Rate
1 pulse per 4 minutes.

Maximum Rate
1 pulse per second.

DIGITAL OUTPUTS – TRIAC (3)

DO1 plus DO2 Rating
24 VA total at 24 Vac, 50/60 Hz, high side switching.

DO3 Rating
12 VA at 24 Vac, 50/60 Hz, high side switching

UNIVERSAL OUTPUT (1)

0 to 20 mA
Output load from 80 to 550 ohms.

0 to 10 V
With external 500 ohms, 1/2 W, 1% resistor.

Capable of Driving Functional Devices

RIBUI1C Relay
UO configured for 0 to 20 mAdc, no external resistor.

MODEL

Model	Inputs and Outputs		
	UI	UO	DO (Triac)
MNB-70	3	1	3

OPTIONS

MNA-FLO-1	TAC MicroNet enclosure, used if wiring to flexible conduit is required
S-Link Sensors	Temperature and humidity wall sensors with digital communication
TSMN Series	Room temperature sensors

© 2012 Schneider Electric. All rights reserved.

FEATURES

- The MicroNet BACnet Zone Controller's sequence of operation and BACnet image are fully programmable using WorkPlace Tech Tool. The controller can be applied to all common zone HVAC applications.
- Capability to function in standalone mode or as part of a BACnet building automation network.
- Integral MS/TP jack for direct connection of PC with WorkPlace Tech Tool.
- DIP switch addressable.
- Service pin button for BACnet "I am" message broadcast.
- Isolated EIA-485 transceiver for MS/TP communications.
- MS/TP baud rate selection from 9.6 up to 76.8 kbaud.
- LED indication of MS/TP communication activity and controller status.
- Firmware upgradeable over the network.

ZONE CONTROLLER TERMINALS

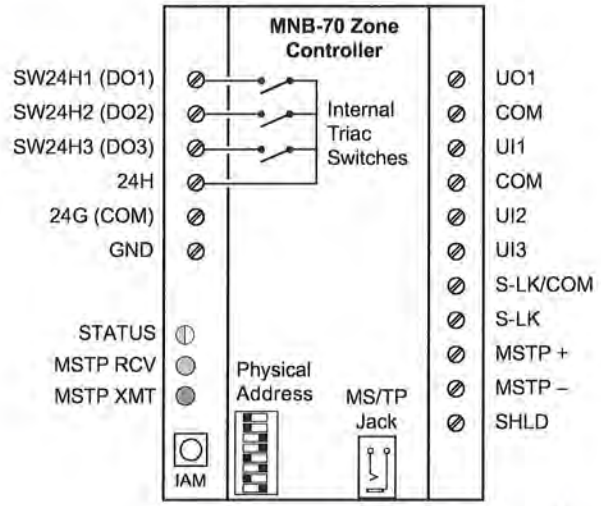

COMMUNICATIONS

BACnet Networks

The MicroNet BACnet Zone Controller incorporates an isolated EIA-485 transceiver for BACnet MS/TP communications at 9.6 up to 76.8 kbaud using standard MS/TP wiring methods. Up to 128 TAC MicroNet BACnet controllers can be connected to an MS/TP sub-net without repeaters.

S-Link

The Sensor Link (S-Link) communications wiring provides power and a communication interface for one MN-Sx TAC I/A Series MicroNet sensor. The various MN-Sx sensors can provide room temperature, room humidity, setpoint adjustment, and occupancy override. This connection uses two-wire, unshielded cable and is not polarity sensitive. Maximum S-Link bus length is 200 ft (61 m).

BACNET COMPLIANCE

BACnet Application Specific Controller (B-ASC).

BACnet is a registered trademark of ASHRAE. ASHRAE does not endorse, approve, or test products for compliance with ASHRAE standards. Compliance of listed products to the requirements of ASHRAE Standard 135 is the responsibility of BACnet International (BI). BTL is a regstered trademark of BI.

Schneider Electric 1354 Clifford Avenue, P.O. Box 2940, Loves Park, IL 61132-2940, USA 1-888-444-1311 www.schneider-electric.com/buildings

© 2012 Schneider Electric. All rights reserved.

ARCHITECTURE

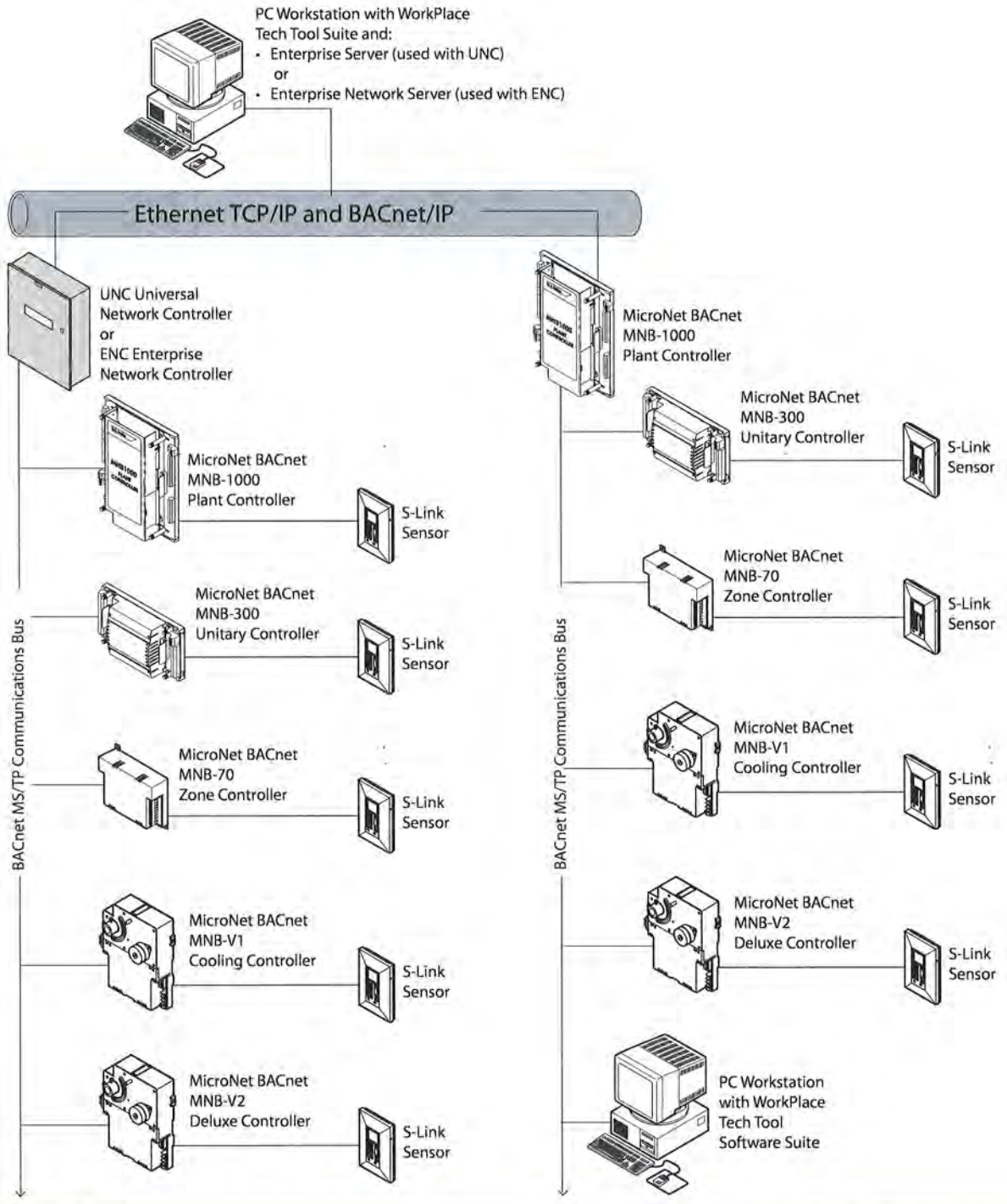

CE c UL us LISTED

Distributed, manufactured, and sold by Schneider Electric. I/A Series trademarks are owned by Invensys Systems, Inc. and are used on this product under master license from Invensys. Invensys does not manufacture this product or provide any product warranty or support. For service, support, and warranty information, contact Schneider Electric.

All brand names, trademarks and registered trademarks are the property of their respective owners. Information contained within this document is subject to change without notice.

Schneider Electric 1354 Clifford Avenue, P.O. Box 2940, Loves Park, IL 61132-2940, USA 1-888-444-1311 www.schneider-electric.com/buildings

© 2012 Schneider Electric. All rights reserved.

data sheet

JACE® 8000 controller

PRODUCT DEFINITION

The JACE 8000 is a compact, embedded IoT (Internet of Things) controller and server platform for connecting multiple and diverse devices and sub-systems. With Internet connectivity and Web-serving capability, the JACE 8000 controller provides integrated control, supervision, data logging, alarming, scheduling and network management. It streams data and rich graphical displays to a standard Web browser via an Ethernet or wireless LAN, or remotely over the Internet.

The licensing model for the JACE 8000 controller is simplified and features standard drivers along with optional IO and field bus expansion modules for ultimate flexibility and expandability. The JACE 8000 controller operates with Niagara 4, the latest version of the Niagara Framework®, for optimum performance. In larger facilities, multi-building applications and large-scale control system integrations, Niagara 4 Supervisors can be used with JACE 8000 controllers to aggregate information, including real-time data, history and alarms, to create a single, unified application.

HARDWARE SPECIFICATIONS

- TI AM3352: 1000MHz ARM® Cortex™-A8
- 1GB DDR3 SDRAM
- Removable micro-SD card with 4GB flash total storage/2GB user storage
- Wi-Fi (Client or WAP)
  - *IEEE802.11a/b/g/n*
  - *IEEE802.11n HT20 @ 2.4GHz*
  - *IEEE802.11n HT20/HT40 @ 5GHz*
  - *Configurable radio (Off, WAP, or Client)*
  - *WPAPSK/WPA2PSK supported*
- USB type A connector
  - *Back-up and restore support*
- (2) isolated RS-485 with selectable bias and termination
- (2) 10/100MB Ethernet ports
- Secure boot
- 24VAC/DC power supply
- Runs Niagara 4.1 and later
- Real time clock
- Batteryless

powered by niagara framework®

EXPANSION MODULE AND IO CONFIGURATIONS

MAXIMUM EXPANSION MODULES SUPPORTED	MAXIMUM IO MODULES SUPPORTED
NPB-8000-LON: 4	T-IO-16-485: 16
NPB-8000-232: 4	
NPB-8000-2X-485: 2	

MAXIMUM COMBINATIONS

EXPANSION 1	EXPANSION 2	EXPANSION 3	EXPANSION 4
232 or LON	232 or LON	232 or LON	232 or LON
485 485	232 or LON	232 or LON	232 or LON
485 485	485 485	232 or LON	
485 485	485 485		

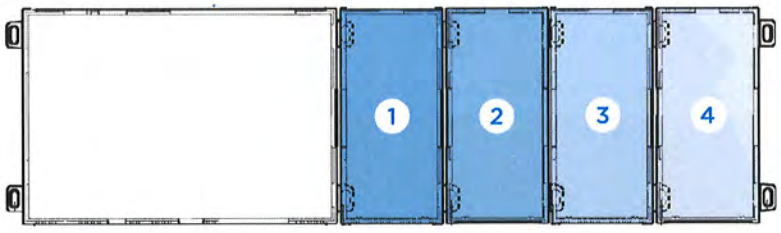

JACE® 8000 CONTROLLER MOUNTING & DIMENSIONS

1. JACE 8000 controller. Allow at least 1.5" (38mm) clearance around all sides and minimum 3" (76mm) at bottom for Wi-Fi antenna
2. Expansion module. Up to four (4) may be used. See "Expansion Module and IO Configurations"
3. Distances between center of tabs from one unit to another unit

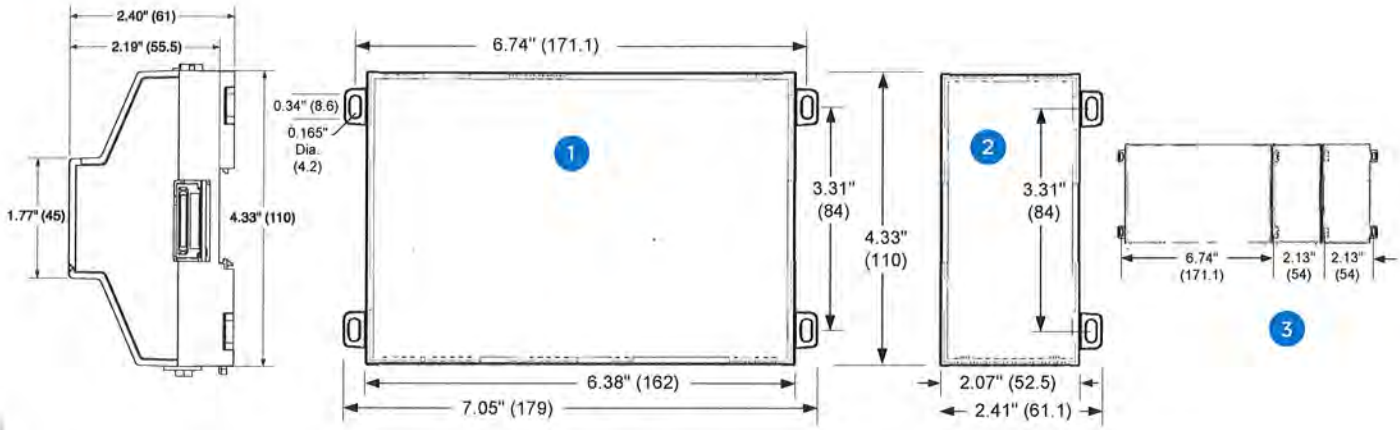

Compatible with (DIN43880) enclosures
Suitable for mounting to a panel or to an EN50022 standard 35mm rail

AGENCY CERTIFICATIONS

- UL 916
- CE EN 61326-1
- FCC Part 15 Subpart B, Class B
- FCC Part 15 Subpart C
- C-UL listed to Canadian Standards Association (CSA) C22.2 No. 205-M1983 "Signal Equipment"
- 1999/5/EC R&TTE Directive
- CCC
- SRRC
- RSS
- ROHS

ENVIRONMENTAL SPECIFICATIONS

- **Operating temperature:** -20–60°C
- **Storage temperature:** -40–85°C
- **Humidity:** 5%–95% — Non condensing
- **Shipping & vibration:** ASTM D4169, Assurance Level II
- **MTTF:** 10 years+

TRIDIUM

ORDERING INFORMATION

Part number	Description
JACE-8000	Base unit includes two isolated RS485 ports, two 10/100MB Ethernet ports, USB Backup & Restore and Wi-Fi connectivity
JACE-8000-DEMO	Base unit includes two isolated RS485 ports, two 10/100MB Ethernet ports, USB Backup & Restore, Wi-Fi connectivity, all available Tridium drivers and a 500 device license. Hardware Accessories purchased separately
NC-8005	Up to 5 devices/250 point core
NC-8010	Up to 10 devices/500 point core
NC-8025	Up to 25 devices/1,250 point core
NC-8100	Up to 100 devices/5,000 point core
NC-8200	Up to 200 devices/10,000 point core
DEVICE-10	Up to 10 devices/500 point upgrade (can be purchased during initial licensing)
DEVICE-25	Up to 25 devices/1,250 point upgrade (can be purchased during initial licensing)
DEVICE-50	Up to 50 devices/2,500 point upgrade (can be purchased during initial licensing)
DEVICE-UP-10	Up to 10 devices/500 point upgrade (can be purchased post initial licensing)
DEVICE-UP-25	Up to 25 devices/1,250 point upgrade (can be purchased post initial licensing)
DEVICE-UP-50	Up to 50 devices/2,500 point upgrade (can be purchased post initial licensing)
JACE-8000-AX	Enables JACE® 8000 controller to run Niagara AX (3.8U). 3.8U Build with JACE 8000 controller support
NPB-8000-2X-485	JACE 8000 controller — add on dual port RS-485 module
NPB-8000-LON	JACE 8000 controller — add on single port LON FTT10A module
NPB-8000-232	JACE 8000 controller — add on single port RS-232 module
WPM-8000	Universal power supply for JACE 8000 controller
T-IO-16-485	Remote IO module, compatible with the JACE 8000 controller. Communication using RS 485, maximum IO supported T-IO-16-485 modules: 16
T-NPB-PWR	24V power supply for T-IO-16-485
T-NPB-PWR-UN	Universal power supply for T-IO-16-485

**All NC-8XXX parts include a Niagara 4 license and Tridium's standard driver suite. Please see Tridium standard driver suite documentation for more details.*

The JACE 8000 controller is available through a wide variety of original equipment manufacturers. Our open distribution business model and open protocol support allow a vendor-neutral application compatible with devices and systems throughout the world.

TRIDIUM 804.747.4771 Corporate HQ / 877.305.1745 Customer Support tridium.com

Copyright © 2015 Tridium Inc. All rights reserved. Intel and Xeon are trademarks of Intel Corporation in the U.S. and/or other countries.

Information and/or specifications published here are current as of the date of publication of this document. Tridium, Inc. reserves the right to change or modify specifications without prior notice. The latest product specifications can be found by contacting our corporate headquarters, Richmond, Virginia. Products or features contained herein may be covered by one or more U.S. or foreign patents. This document may be copied only as expressly authorized by Tridium in writing. It may not otherwise, in whole or in part, be copied, photocopied, reproduced, translated, or reduced to any electronic medium or machine-readable form.

2015-0013

data sheet

niagara4 supervisor

PRODUCT DEFINITION

The Niagara Supervisor is part of the portfolio of Java-based controller/server products, software applications and tools powered by the Niagara Framework®. It provides server-level functions for a network of JACE, Niagara Edge and other field device clients. The Niagara Supervisor serves real-time graphical information to standard web-browser clients and performs other functions like centralized data logging/trending, archiving to external databases, alarming, dashboarding, system navigation, master scheduling, database management and integration with other enterprise software applications through an XML interface (oBIX standard). Also, it provides a comprehensive graphical engineering toolset for application development.

The Niagara Supervisor allows the networking of multiple Niagara-based JACE® and Niagara Edge™ controllers, along with other IP-based controllers and field devices. It enables the design, configuration and maintenance of a unified, real-time controls network.

key features

- Centralized system management
- Quickly navigate to individual buildings using tags to diagnose problems
- Compare data between buildings
- Export system data to external databases
- Integrate BAS to other enterprise applications
- Integrate to other applications, such as work order management, analytics, etc.
- Single tool used to program JACE and Edge controllers and Supervisor
- Remotely back up JACE and Edge applications to Supervisor
- Batch provisioning of JACE and Edge firmware upgrades, security credentials, applications and commissioning options from Supervisor
- Robust built-in analytic capabilities supported by standard Niagara components and visualizations
- Compatibility with Niagara Analytics, adding data source, functional and mathematical programming blocks to enable sophisticated analytic algorithms
- Compatibility with Niagara Enterprise Security access control and security application. Allows integration of BAS and access control to save energy and optimize operations
- Eligible for accreditation under the Federal Risk Management Framework (RMF)
- FIPS 140-2 Level 1 conformance available

powered by niagara framework®

SPECIFICATIONS

HTML5 and Java-enabled user interface (UI); JavaScript data interface library included (BajaScript)

Supports an unlimited number of users over the internet/intranet with a standard web browser (depending on the host PC resources)

Optional enterprise-level data archival using SQL, MySQL or Oracle databases, and HTTP/HTML/XML, CSV or text formats

"Audit Trail" of database changes, database storage and backup, global time functions, calendar, central scheduling, control and energy management routines

Sophisticated alarm processing and routing, including email alarm acknowledging

Access to alarms, logs, graphics, schedules and configuration data with a standard web browser

Niagara follows industry best practices for cyber security, with support for features such as strong, hashed passwords, TLSv1.2 for secure communications and certificate management tools for authentication

HTML-based help system that includes comprehensive online system documentation

Supports multiple Niagara-based stations connected to a local Ethernet network or the internet

Provides online/offline use of the Niagara Framework® Workbench AX graphical configuration tool and a comprehensive Java Object Library

Optional direct Ethernet-based driver support for most Open IP field bus protocols (see supported drivers document)

SOFTWARE & DRIVERS

Every JACE comes with a Niagara 4 software license and many open-protocol IP drivers that cover standard control situations. Other drivers can be purchased separately à la carte. For an up-to-date list of supported drivers, visit the resource library on tridium.com.

SOFTWARE MAINTENANCE

Purchase of a software maintenance agreement (SMA) is required with initial Niagara Supervisor licensing. The initial SMA is for 18 months, with extended agreements of 3 years and 5 years available for discounted rates.

If a Software Maintenance Agreement is not in effect for any period, the price of maintenance for the next period for which it is purchased will be priced at a cost equal to the maintenance fee for the period(s) for which maintenance was not purchased, up to a maximum of 5 years, plus the maintenance fee for the next year.

For an up-to-date list of supported drivers, visit the resource library on tridium.com.

ORDERING INFORMATION

Part number	Description
SUP-0	No Niagara network – Devices only. 18mo SMA required
SUP-0-SMA-INIT	18mo initial SMA required (3YR or 5YR can be substituted)
SUP-1	1 Niagara network connection (18mo SMA req)
SUP-1-SMA-INIT	18mo initial SMA required (3YR or 5YR can be substituted)
SUP-2	2 Niagara network connections (18mo SMA req)
SUP-2-SMA-INIT	18mo initial SMA required (3YR or 5YR can be substituted)
SUP-3	3 Niagara network connections (18mo SMA req)
SUP-3-SMA-INIT	18mo initial SMA required (3YR or 5YR can be substituted)
SUP-10	10 Niagara network connections (18mo SMA req)
SUP-10-SMA-INIT	18mo initial SMA required (3YR or 5YR can be substituted)
SUP-100	100 Niagara network connections (18mo SMA req)
SUP-100-SMA-INIT	18mo initial SMA required (3YR or 5YR can be substituted)
SUP-UNL	Unlimited Niagara network connections (18mo SMA req)
SUP-UNL-SMA-INIT	18mo initial SMA required (3YR or 5YR can be substituted)
SUP-DEMO	Niagara 4 Supervisor demo
SUP-UP-1	Adds one additional Niagara connection to Supervisor
SUP-UP-100	Upgrades small Supervisor to 100 Niagara connections
SUP-UP-UNL	Upgrades Supervisor 100 to unlimited Niagara connections
SUP-DEVICE-10	10 device upgrade (standard drivers included)
SUP-DEVICE-25	25 device upgrade (standard drivers included)
SUP-DEVICE-50	50 device upgrade (standard drivers included)
SUP-DEVICE-100	100 device upgrade (standard drivers included)
SUP-DEVICE-200	200 device upgrade (standard drivers included)
SUP-DEVICE-500	500 device upgrade (standard drivers included)
SUP-DEVICE-1000	1000 device upgrade (standard drivers included)
SP-S-FIPS	Provides FIPS 140-2 Level 1 conformance for 4.6 and later
SUP-AX	Enables Supervisor to run Niagara AX (v3.8)
SUP-[0-UNL]-SMA-[1,3,5]YR	Supervisor [0-UNL] Maintenance – [1,3,5] YR extensions

COMPATIBILITY

In any given Niagara system, the Niagara Supervisor must be running the highest version of any Niagara instance in the architecture.

When connecting to JACEs that are running older versions of Niagara, these compatibility guidelines apply:

- **Niagara AX:** Niagara 4 Supervisors can connect to JACEs running Niagara AX versions 3.6u4, 3.7u1, 3.8R and higher.
- **R2:** Niagara AX and Niagara 4 Supervisors can connect to JACEs running R2 through the oBIX XML interface only. oBIX is included in all Niagara AX and Niagara 4 Supervisors as a means of integrating Niagara-based Release 2 (R2) JACEs. With Niagara Release 2.3.522 or higher, the oBIX driver can be added to expose all data points, schedules, trends and alarms to a Niagara AX or Niagara 4 system. This oBIX driver is both a client and a server.

PLATFORM REQUIREMENTS FOR NIAGARA SUPERVISOR

Niagara 4 Supervisors may run acceptably on lower-rated platforms, or may even require more powerful platforms, depending on the application, number of data points integrated, data poll rate, number of concurrent users, performance expectations, etc.

- **Processor:** Intel® Xeon® CPU E5-2640 x64 (or better), compatible with dual- and quad-core processors
- **Operating System:** Windows 7 Professional/Enterprise/Ultimate (32 and 64 bit), Windows 8.1 Professional/Enterprise/Ultimate (32 and 64 bit)Windows 10 (32 and 64 bit), Windows Server 2012 R2 (SP2) Standard/Enterprise, Windows Server 2016, Red Hat Enterprise Linux 7.4
- **Memory:** 6 GB minimum, 8 GB or more recommended for larger systems
- **Hard Drive:** 4 GB minimum, more recommended depending on archiving requirements
- **Display:** Video card and monitor capable of displaying 1024 x 768 pixel resolution or greater
- **Network Support:** Ethernet adapter (10/100 Mb with RJ-45 connector)
- **Connectivity:** Full-time high-speed ISP connection recommended for remote site access (i.e., T1, ADSL, cable modem) and IPv6 compliant

Platform requirements for older versions of Niagara Supervisors are included in the release notes for each particular version.

TRIDIUM

tridium.com

Locations and customer support, worldwide

Headquarters
North America
1 804 747 4771

Support
North America & Latin America
1 877 305 1745

Europe, Middle East & Africa
44 1403 740290

Asia Pacific
8610 5669 7148

© 2018 Tridium Inc. All rights reserved. All other trademarks and registered trademarks are properties of their respective owners.

Information and/or specifications published here are current as of the date of publication of this document. Tridium Inc. reserves the right to change or modify specifications without prior notice. The latest product specifications can be found by contacting our corporate headquarters, Richmond, Virginia. Products or features contained herein may be covered by one or more U.S. or foreign patents. This document may be copied only as expressly authorized by Tridium in writing. It may not otherwise, in whole or in part, be copied, photocopied, reproduced, translated, or reduced to any electronic medium or machine-readable form.

2018-0018

Savings Calculations

ECM #8 Roof Replacement/Insulation

Existing Roof Heating Load

Client:	**SCI Houtzdale**
Location:	**Roofs**

Design Inputs

Occupied Design Temp:	**70**	Degrees F
Outside Design Temp:	**5**	Degrees F
Building Information		
Conditionedl SqFt	**422,294**	
Lighting Load:	**0**	kW
Equipment:	**0**	kW
No. of People:	**0**	= 0 cfm ODA required @ 15 cfm/person
Heat gain per person:	**225**	Btuh per person

Building Section	Component	Area (sq feet)	U - value	(O.A Temp - Indoor Temp)	Heat Loss (Btu/hour)	% of Total
Exterior Walls	Total North	**0**	**0.197**	65	0	0%
	Total East	**0**	**0.197**	65	0	0%
	Total South	**0**	**0.197**	65	0	0%
	Total West	**0**	**0.197**	65	0	0%
Windows	Total Glazing DP	**0**	**0.55**	65	0	0%
Windows	Insulated Panel	**0**	**0.09**	65	0	0%
Windows	Total GlazingSP	**0**	**1.13**	65	0	0%
Exterior Doors	Glass/Aluminum	**0**	**0.59**	65	0	0%
Roofs, Ceilings	with suspended ceiling	**422,294**	**0.07**	65	2,031,762	100%
	without suspended ceil.	**0**	**0.00**	65	0	0%
Glass Block	Glass Block Glazing	**0**	**0.61**	65	0	0%
						0%
		lineal feet	Btuh / ft			
Perimeter Loss		**460**	**0**		0	0%
Slab loss		**140,765**	**0**		0	0%
	Building Volume (cu ft)	Air Changes per Hour	Conversion Factor			
Infiltration	**15,836,025**	**0.00**	0.018 cfm	65	185	0%
				Building Envelope Loads:	2,031,948	100%
	% of Occupied Rate					
Occupied Ventilation:	0%	**0**	cfm	65	0	0%
Unoccupied Ventilation:	**0%**	0	cfm	65	0	
				Total Heat Loss - Occupied Periods:	**2,031,948**	100%
				Total Heat Loss - Unoccupied Periods:	2,031,948	100%

		MMBtuOutput From Boiler	Existing
Temp. °F	Total Hours	31,261 Btuh / Deg F	Annual MCF Input to Boiler
52.5	659	360	424
47.5	512	360	424
42.5	722	621	730
37.5	808	821	966
32.5	897	1,051	1,237
27.5	411	546	642
22.5	452	671	790
17.5	270	443	521
12.5	77	138	163
7.5	5	10	11
2.5	2	4	5
-2.5	0	-	-
-7.5	0	-	-
	4,815	5,026	5,913

CALCULATIONS:

Heat Loss:

By Conduction = Area x U-value x (Outdoor Temp. - Indoor Temp)

By Perimeter = Length of Perimeter x Btuh/ft

By Infiltration = Building Volume x No. of Air Changes per Hour x Conv factor x (Indoor Temp - Outdoor Temp)

Proposed Roof Heating Load

Client:	**SCI Houtzdale**
Location:	**Roofs**

Design Inputs

Occupied Design Temp:	**70**	Degrees F
Outside Design Temp:	**5**	Degrees F
Building Information		
Conditionedl SqFt	**422,294**	
Lighting Load:	**0**	kW
Equipment:	**0**	kW
No. of People:	**0**	= 0 cfm ODA required @ 15 cfm/person
Heat gain per person:	**225**	Btuh per person

Building Section	Component	Area (sq feet)	U - value	(O.A Temp - Indoor Temp)	Heat Loss (Btu/hour)	% of Total
Exterior Walls	Total North	**0**	**0.197**	65	0	0%
	Total East	**0**	**0.197**	65	0	0%
	Total South	**0**	**0.197**	65	0	0%
	Total West	**0**	**0.197**	65	0	0%
Windows	Total Glazing DP	**0**	**0.55**	65	0	0%
Windows	Insulated Panel	**0**	**0.09**	65	0	0%
Windows	Total GlazingSP	**0**	**1.13**	65	0	0%
Exterior Doors	Glass/Aluminum	**0**	**0.59**	65	0	0%
Roofs, Ceilings	with suspended ceiling	**422,294**	**0.03**	65	885,170	100%
	without suspended ceil.	**0**	**0.00**	65	0	0%
Glass Block	Glass Block Glazing	**0**	**0.61**	65	0	0%
						0%
		lineal feet	Btuh / ft			
Perimeter Loss		**460**	**0**		0	0%
Slab loss		**140,765**	**0**		0	0%
	Building Volume (cu ft)	Air Changes per Hour	Conversion Factor			
Infiltration	**15,836,025**	**0.00**	0.018 cfm	65	185	0%
			Building Envelope Loads:		885,355	100%
	% of Occupied Rate					
Occupied Ventilation:	0%	**0**	cfm	65	0	0%
Unoccupied Ventilation:	**0%**	0	cfm	65	0	
			Total Heat Loss - Occupied Periods:		**885,355**	100%
			Total Heat Loss - Unoccupied Periods:		885,355	100%

Temp. °F	Total Hours	MMBtuOutput From Boiler 13,621 Btuh / Deg F	Proposed Annual MCF Input to Boiler
52.5	659	157	185
47.5	512	157	185
42.5	722	270	318
37.5	808	358	421
32.5	897	458	539
27.5	411	238	280
22.5	452	292	344
17.5	270	193	227
12.5	77	60	71
7.5	5	4	5
2.5	2	2	2
-2.5	0	-	-
-7.5	0	-	-
	4,815	2,190	2,576

Savings Summary		
Existing	Proposed	Savings
Annual MCF Input to Boiler	Annual MCF Input to Boiler	Annual MCF Input to Boiler
424	185	239
424	185	239
730	318	412
966	421	545
1,237	539	698
642	280	362
790	344	446
521	227	294
163	71	92
11	5	6
5	2	3
-	-	-
-	-	-
5,913	2,576	3,337

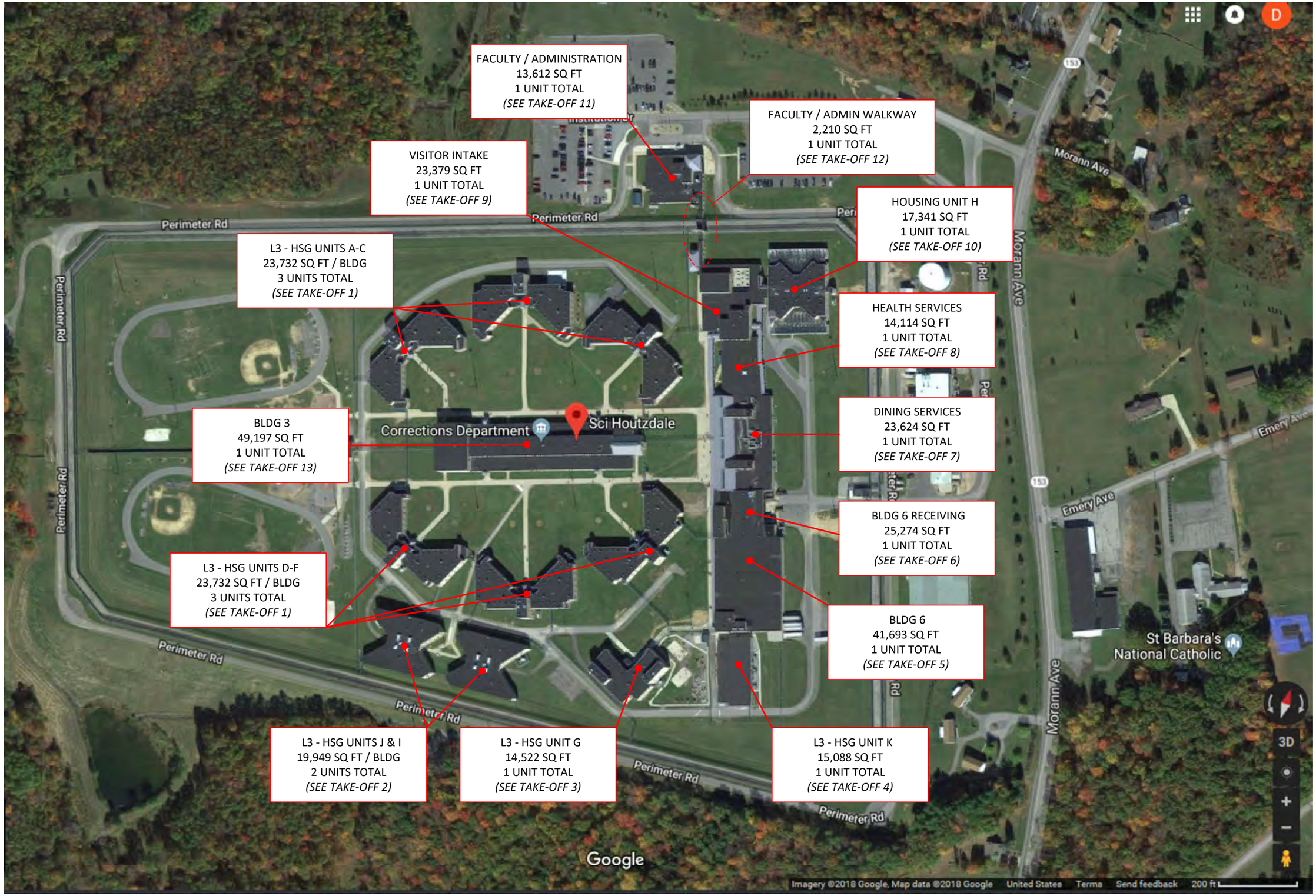
FACULTY / ADMINISTRATION
13,612 SQ FT
1 UNIT TOTAL
(SEE TAKE-OFF 11)
FACULTY / ADMIN WALKWAY
2,210 SQ FT
1 UNIT TOTAL
(SEE TAKE-OFF 12)
VISITOR INTAKE
23,379 SQ FT
1 UNIT TOTAL
(SEE TAKE-OFF 9)
HOUSING UNIT H
17,341 SQ FT
1 UNIT TOTAL
(SEE TAKE-OFF 10)
L3 - HSG UNITS A-C
23,732 SQ FT / BLDG
3 UNITS TOTAL
(SEE TAKE-OFF 1)
HEALTH SERVICES
14,114 SQ FT
1 UNIT TOTAL
(SEE TAKE-OFF 8)
BLDG 3
49,197 SQ FT
1 UNIT TOTAL
(SEE TAKE-OFF 13)
DINING SERVICES
23,624 SQ FT
1 UNIT TOTAL
(SEE TAKE-OFF 7)
BLDG 6 RECEIVING
25,274 SQ FT
1 UNIT TOTAL
(SEE TAKE-OFF 6)
L3 - HSG UNITS D-F
23,732 SQ FT / BLDG
3 UNITS TOTAL
(SEE TAKE-OFF 1)
BLDG 6
41,693 SQ FT
1 UNIT TOTAL
(SEE TAKE-OFF 5)
L3 - HSG UNITS J & I
19,949 SQ FT / BLDG
2 UNITS TOTAL
(SEE TAKE-OFF 2)
L3 - HSG UNIT G
14,522 SQ FT
1 UNIT TOTAL
(SEE TAKE-OFF 3)
L3 - HSG UNIT K
15,088 SQ FT
1 UNIT TOTAL
(SEE TAKE-OFF 4)
Perimeter Rd
Morann Ave
Emery Ave
Corrections Department
Sci Houtzdale
St Barbara's
National Catholic
153
3D
Google
Imagery ©2018 Google, Map data ©2018 Google
United States
Terms
Send feedback
200 ft

NOTES:
TYPICAL OF UNITS A THRU F (6UNITS)

BLOCKS & DIMENSIONS IN RED FONT ARE MIRROR IMAGES TO OF LEFT SIDE OF BLDG

BLOCKS IN GREEN FONT ARE SINGULAR

ROOF TAKE-OFF CALCULATIONS

	L	W	SQ FT	Calc. SQ FT
MIRRORED	30	20	600	1200
MIRRORED	86	33	2838	5676
MIRRORED	61	30	1830	3660
MIRRORED TRIANGLE			98	196
MIRRORED	9	13	117	234
MIRRORED	27	91	2457	4914
MIRRORED TRIANGLE			2113	4226
MIRRORED TRIANGLE			98	196
MIRRORED	14	14	196	392
MIRRORED	31	17	527	1054
SINGULAR	33	16	528	528
SINGULAR	28	52	1456	1456
		CALCULATED SQ FT		23,732
		BLDG LISTED SQ FT		16,100
		DELTA SQ FT		7,632

31 ft x17ft
(527 sq ft)

14 ft x 9ft
(126 sq ft)

14 ft x 14 ft
2
(98 sq ft)

13.5 ft x 13.5
2
(98 sq ft)

65 ft x 65ft
2
(2,113 sq ft)

30 ft x 20ft
(600 sq ft)

27 ft x 91ft
(2,457 sq ft)

61 ft x 30ft
(1,830 sq ft)

33 ft x 16ft
(528 sq ft)

86 ft x 33ft
(2,838 sq ft)

9 ft x 13t
(117 sq ft)

28 ft x 52ft
(1,456 sq ft)

TAKE-OFF
1

Imagery ©2018 Google, Map data ©2018 Google United States Terms Send feedback 50 ft

NOTES:
TYPICAL OF UNITS J & I (2 UNITS)

ROOF TAKE-OFF CALCULATIONS

	L	W	SQ FT
BLOCK	85	147	12,495
			2,074
			2,074
			1,653
			1,653

CALCULATED SQ FT	19,949
BLDG LISTED SQ FT	40,300
DELTA SQ FT	-20,351

64.4 FT X 64.4 FT
2

(2,074 SQ FT)

85 FT X 147 FT
(12,495 SQ FT)

64.4 FT X 64.4 FT
2

MINUS 421 SQ FT

(1,653 SQ FT)

64.4 FT X 64.4 FT
2

(2,074 SQ FT)

64.4 FT X 64.4 FT
2

MINUS 421 SQ FT

(1,653 SQ FT)

3D

TAKE-OFF
2

Imagery ©2018 Google, Map data ©2018 Google United States Terms Send feedback 50 ft

2.2813 IN. = 50 FT.

NOTES:
UNIT G

ROOF TAKE-OFF CALCULATIONS

L	W	SQ FT
61	20	1,220
61	40	2,440
54	68	3,672
33	62	2,046
20	27	540
34	16	544
44	65	2,860
20	60	1,200

CALCULATED SQ FT	14,522
BLDG LISTED SQ FT	15,725
DELTA SQ FT	-1,203

NOTES:
UNIT K

ROOF TAKE-OFF CALCULATIONS

	L	W	SQ FT
	175	60	10,500
	161	28	4,508

CALCULATED SQ FT	15,008
BLDG LISTED SQ FT	15,725
DELTA SQ FT	-717

NOTES:
BLDG 6

ROOF TAKE-OFF CALCULATIONS

L	W	SQ FT
215	122	26,230
191	51	9,741
26	92	2,392
26	81	2,106
24	51	1,224

CALCULATED SQ FT	41,693
BLDG LISTED SQ FT	28,470
DELTA SQ FT	13,223

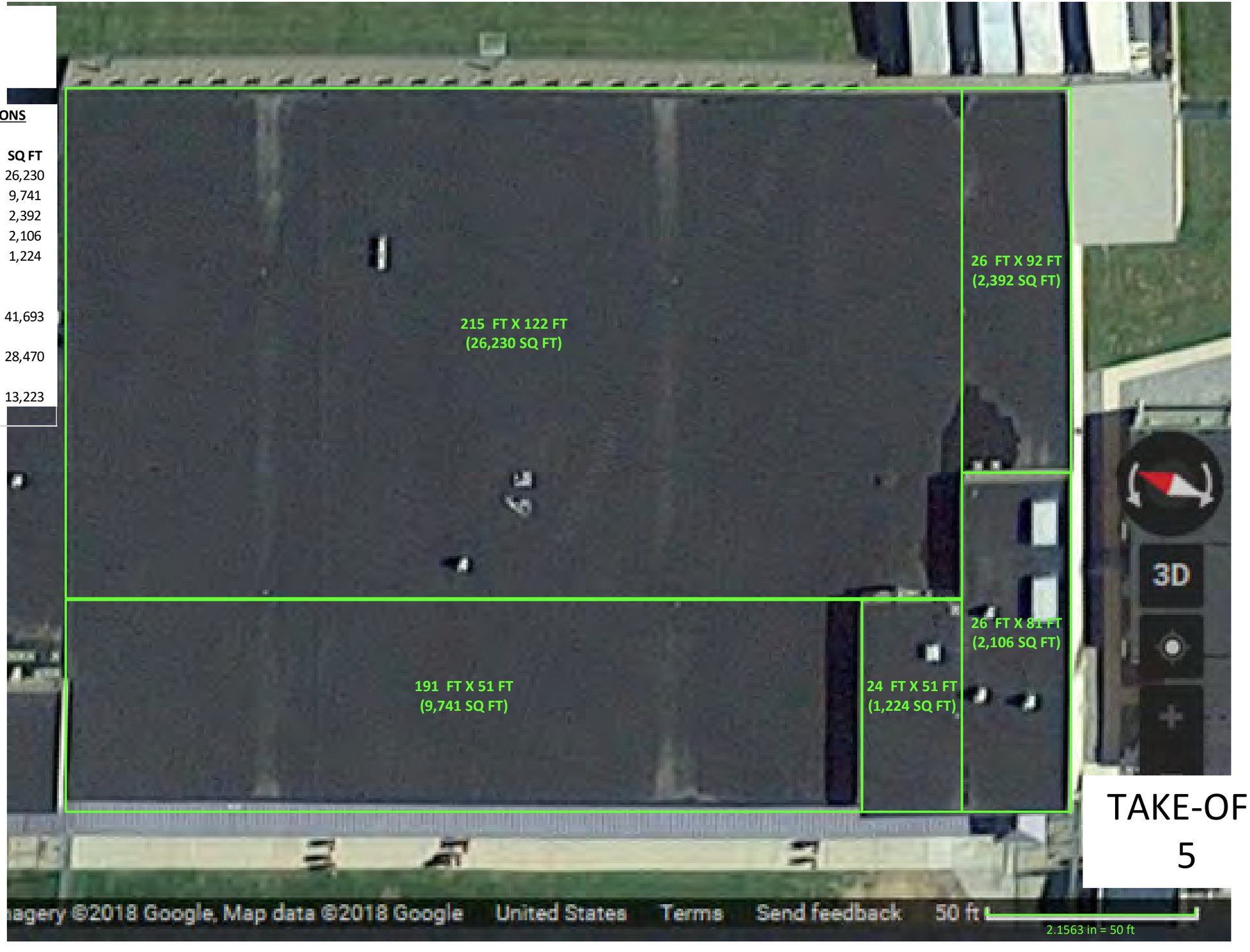

TAKE-OFF
5

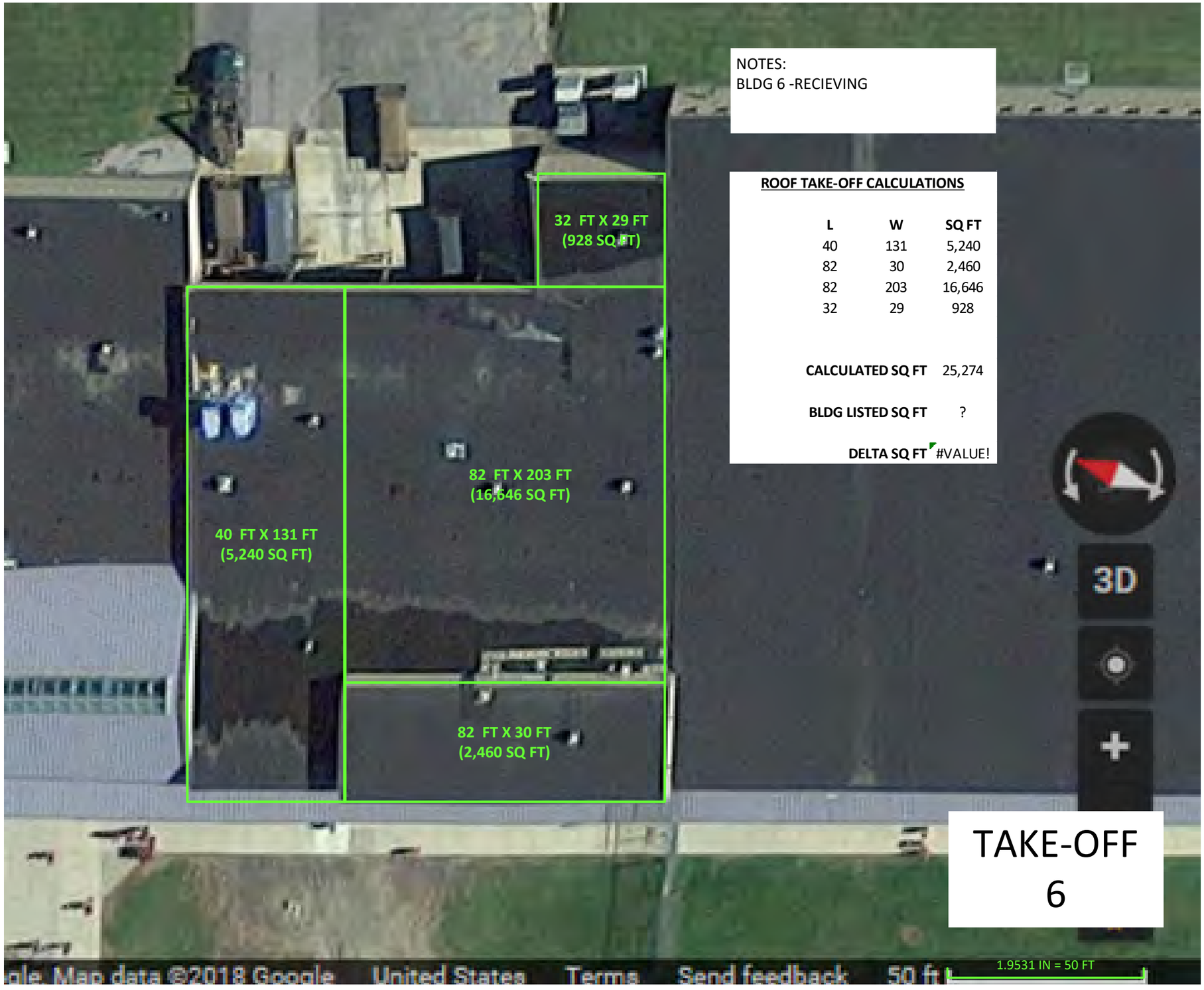

NOTES:
BLDG 6 -RECIEVING

ROOF TAKE-OFF CALCULATIONS

L	W	SQ FT
40	131	5,240
82	30	2,460
82	203	16,646
32	29	928

CALCULATED SQ FT 25,274

BLDG LISTED SQ FT ?

DELTA SQ FT #VALUE!

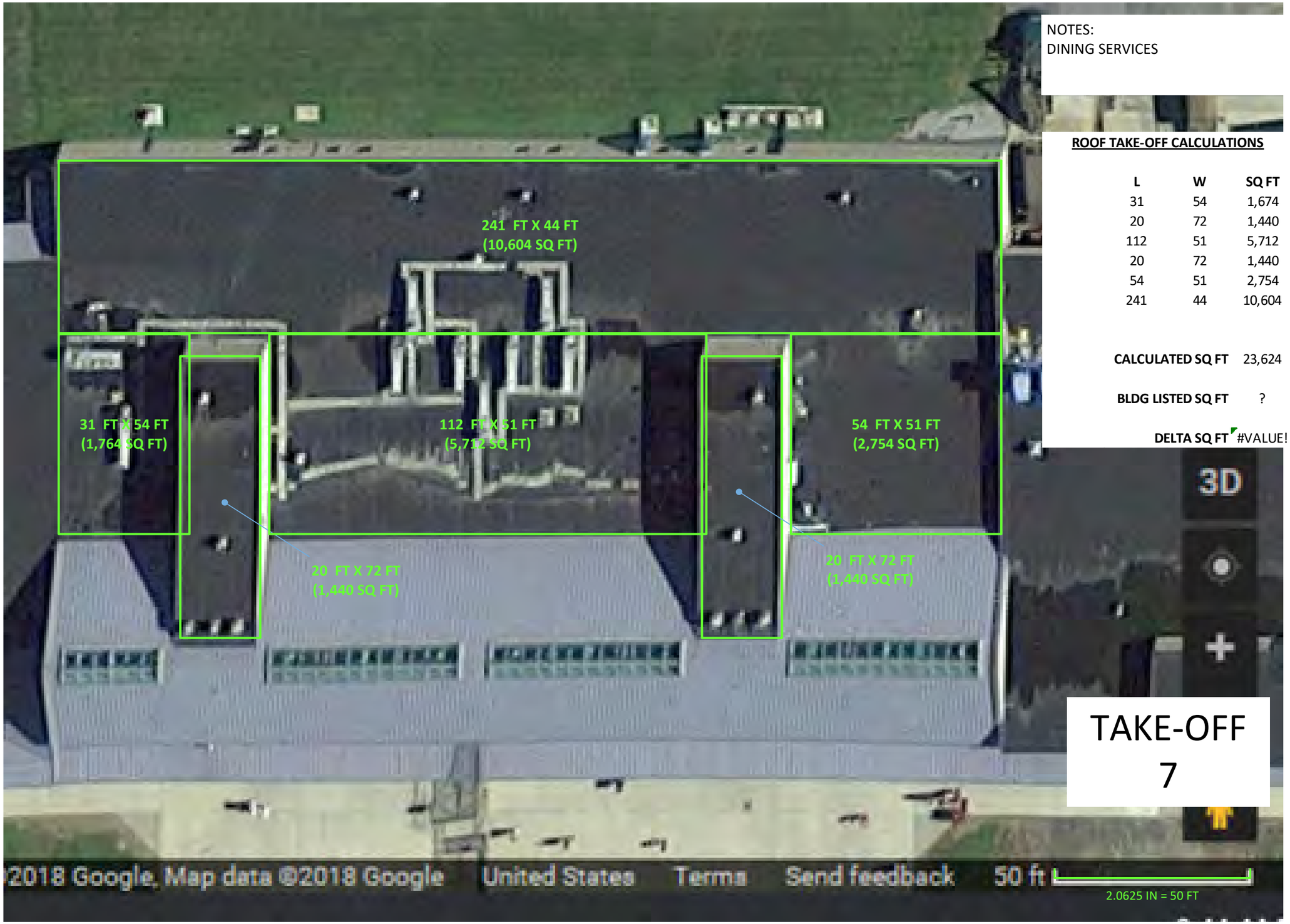

NOTES:
DINING SERVICES

ROOF TAKE-OFF CALCULATIONS

L	W	SQ FT
31	54	1,674
20	72	1,440
112	51	5,712
20	72	1,440
54	51	2,754
241	44	10,604

CALCULATED SQ FT	23,624
BLDG LISTED SQ FT	?
DELTA SQ FT	#VALUE!

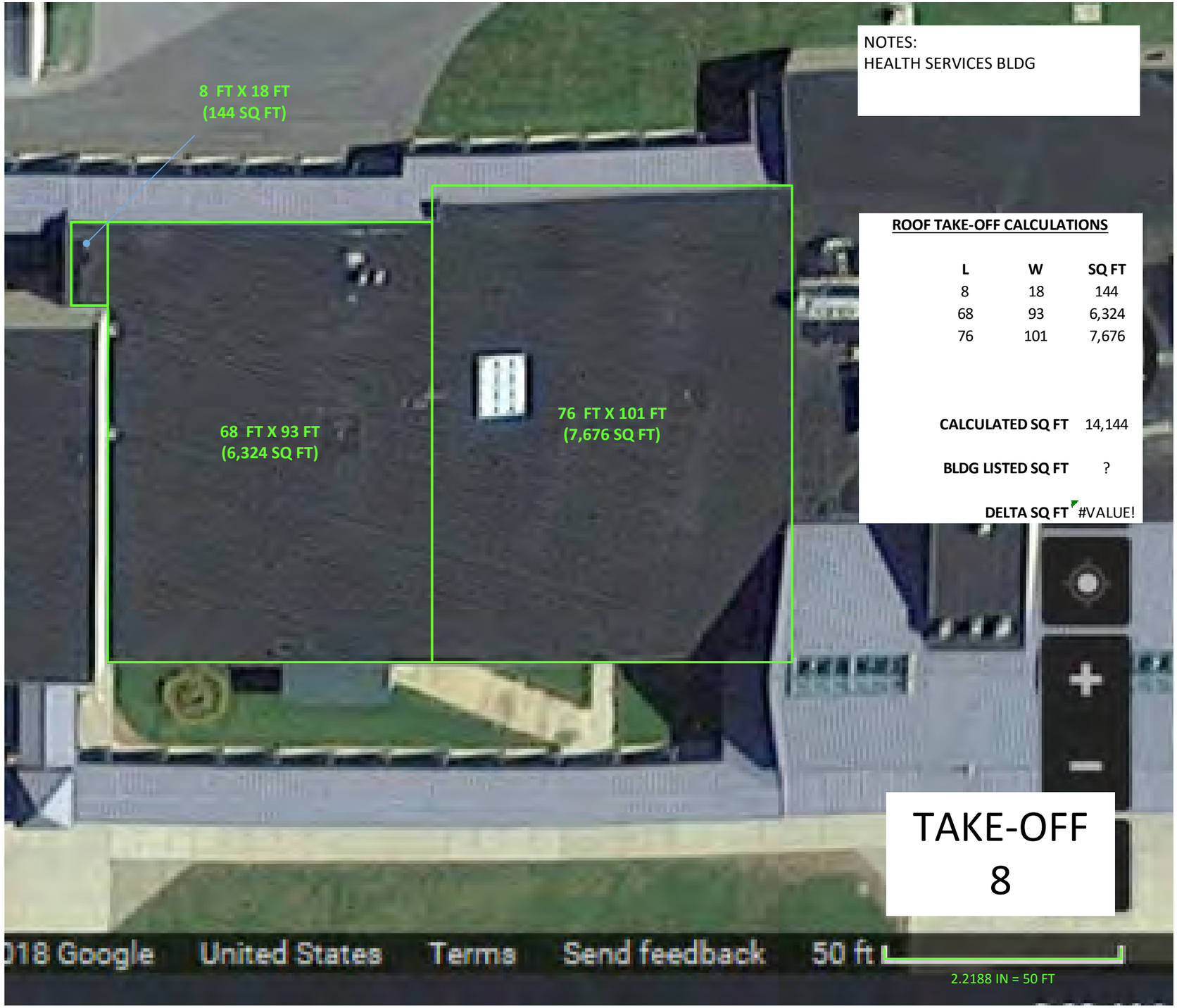
8 FT X 18 FT
(144 SQ FT)
68 FT X 93 FT
(6,324 SQ FT)
76 FT X 101 FT
(7,676 SQ FT)
NOTES:
HEALTH SERVICES BLDG
ROOF TAKE-OFF CALCULATIONS
L W SQ FT
8 18 144
68 93 6,324
76 101 7,676
CALCULATED SQ FT 14,144
BLDG LISTED SQ FT ?
DELTA SQ FT #VALUE!
TAKE-OFF
8
018 Google United States Terms Send feedback 50 ft
2.2188 IN = 50 FT

NOTES:
VISITOR INTAKE

ROOF TAKE-OFF CALCULATIONS

L	W	SQ FT
24	81	1,944
48	76	3,648
97	45	4,365
68	30	2,040
51	74	3,774
10	47	470
46	33	1,518
24	60	1,440
33	14	462
12	11	132
102	27	2,754
29	4	116
4	19	76
40	11	440
25	8	200
		0
CALCULATED SQ FT		23,379

TAKE-OFF
9

NOTES:
HSG UNIT H

ROOF TAKE-OFF CALCULATIONS

	L	W		SQ FT
	130	21		2,730
	60	12	-84	636
TRIANGLE				942
	45	42		1,890
TRIANGLE				942
	60	12	-84	636
	80	19		1,520
	60	12	-84	636
TRIANGLE				942
	45	42		1,890
TRIANGLE				942
	60	12	-84	636
	130	21		2,730
Top right sections x 2				96
Top right sections x 2				25
Top right sections x 2				148

CALCULATED SQ FT	17,341
BLDG LISTED SQ FT	17,139
DELTA SQ FT	202

TAKE-OFF
10

NOTES:
FACULTY/ADMINISTRATION

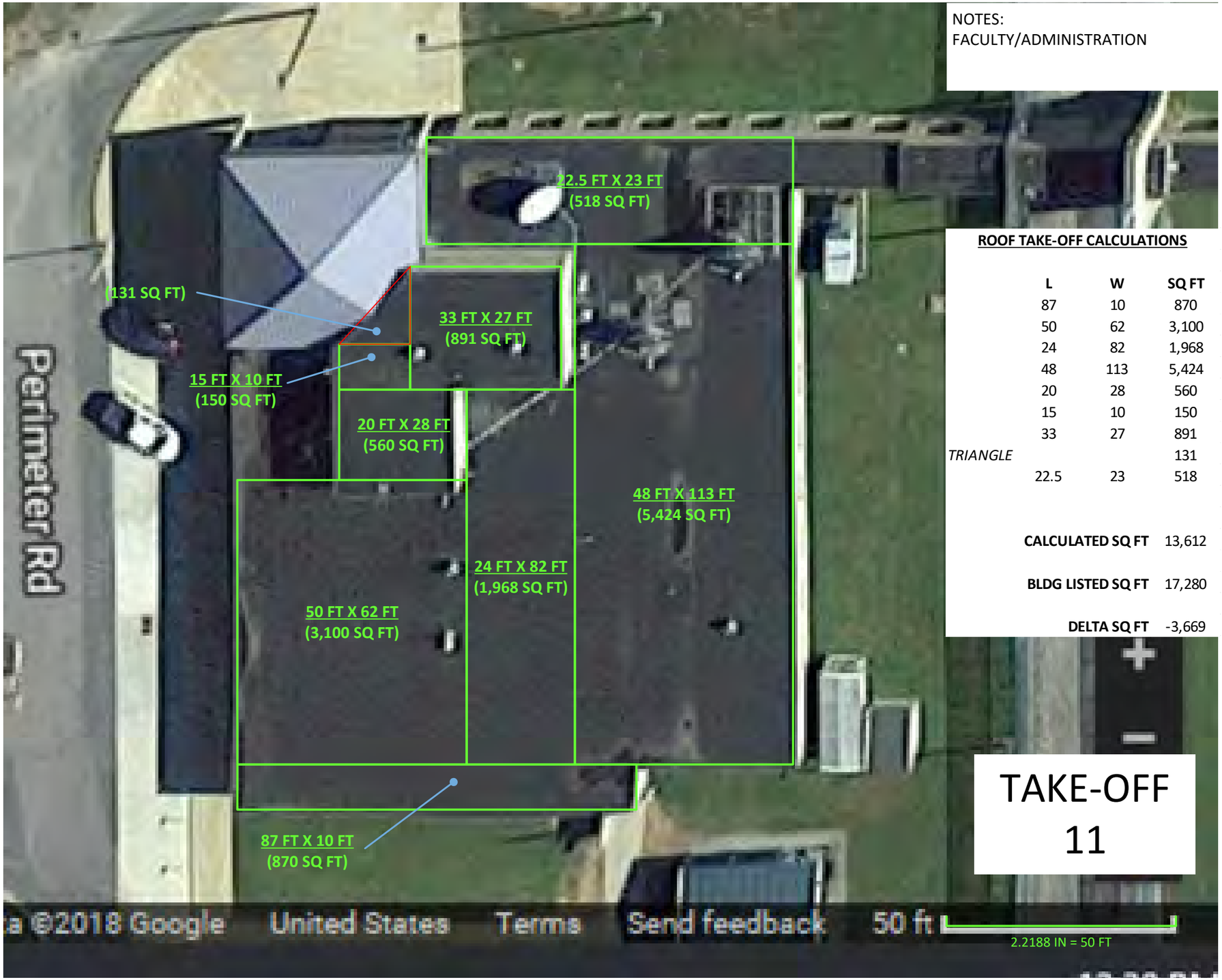

ROOF TAKE-OFF CALCULATIONS

	L	W	SQ FT
	87	10	870
	50	62	3,100
	24	82	1,968
	48	113	5,424
	20	28	560
	15	10	150
	33	27	891
TRIANGLE			131
	22.5	23	518

CALCULATED SQ FT	13,612
BLDG LISTED SQ FT	17,280
DELTA SQ FT	-3,669

TAKE-OFF
11

NOTES:
FACULTY/ADMIN WALKWAY

ROOF TAKE-OFF CALCULATIONS

L	W	SQ FT
170	13	2,210

CALCULATED SQ FT	2,210
BLDG LISTED SQ FT	???
DELTA SQ FT	#VALUE!

TAKE-OFF
12

NOTES:
BLG 3- PROGRAM SERVICES

ROOF TAKE-OFF CALCULATIONS

L	W	SQ FT
410	36	14,760
362	50	18,100
410	36	14,760
83	19	1,577

CALCULATED SQ FT 49,197

BLDG LISTED SQ FT 61362

DELTA SQ FT -12,165

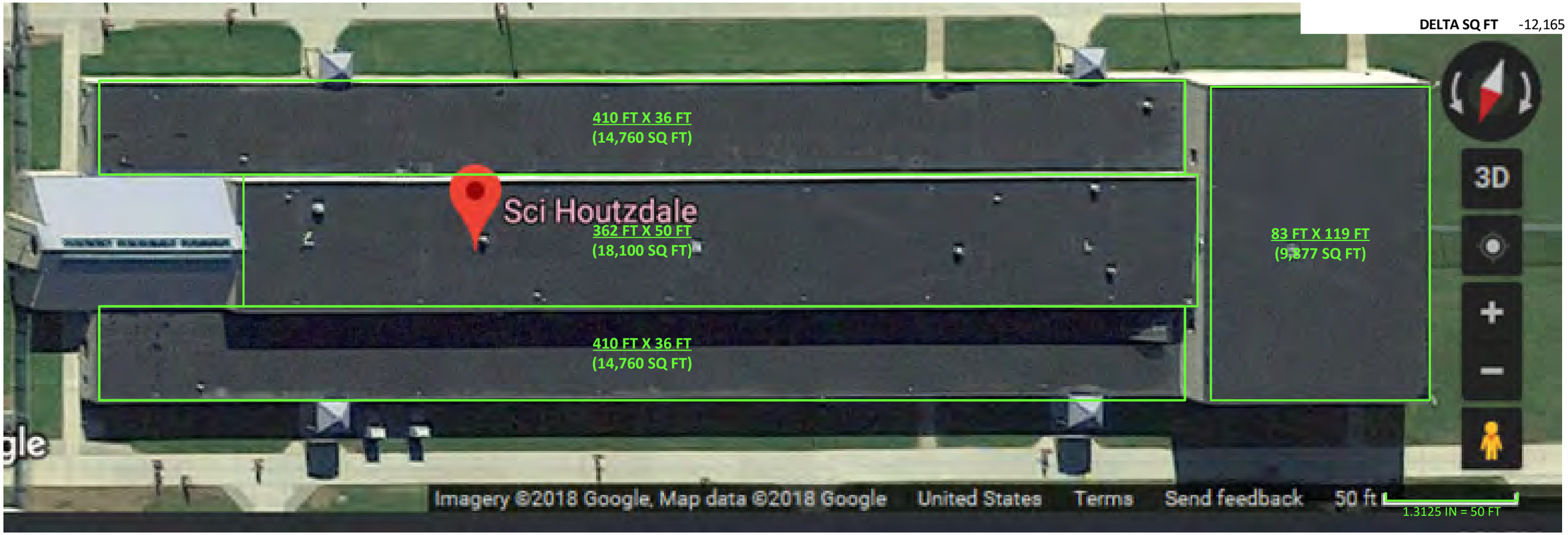

TAKE-OFF
13

Equipment Specifications Sheets

ECM #8 Roof Replacement/Insulation

VERSICORE MP-H® POLYISO

Overview

VersiCore MP-H is a rigid-roof insulation panel composed of a closed-cell polyisocyanurate foam core bonded on each side to glass-reinforced felt (GRF).

Features and Benefits

- VersiCore MP-H polyiso insulation provides the highest R-value per inch of commercially available insulation products
- Environmentally friendly construction with 0% ozone-depleting components and CFC free
- Approved for direct application to steel decks

Panel Characteristics

- Available in 4' x 4' (1220 mm x 1220 mm) and 4' x 8' (1220 mm x 2440 mm) panels in thickness of ½" (13 mm) to 4.5" (115 mm)

Applications

- Single-Ply Roof Systems (Ballasted, Mechanically Attached, Fully Adhered)

THERMAL VALUES

Thickness (inches)	Thickness (MM)	LTTR R-value	Flute Spanability
0.50"	13	2.8	2⅝"
1.00"	25	5.7	2⅝"
1.50"	38	8.6	4⅜"
2.00"	51	11.4	4⅜"
2.50"	64	14.4	4⅜"
3.00"	76	17.4	4⅜"
3.50"	89	20.5	4⅜"
4.00"	102	23.6	4⅜"
4.50"	114	26.8	4⅜"

Installation

Ballasted Single-Ply Systems

Each VersiCore MP-H panel is loosely laid on the roof deck. Butt edges and stagger joints of adjacent panels. Install the roof membrane according to Versico's specifications.

Mechanically Attached Single-Ply Systems

VersiCore MP-H panel must be secured to the roof deck with fasteners and plates (appropriate to the deck type). Butt edges and stagger joints of adjacent panels. Install the roof membrane according to Versico's specifications.

Fully Adhered Single-Ply Systems

VersiCore MP-H panel must be secured to the roof deck with fasteners and plates (appropriate to deck type). Butt edges and stagger joints of adjacent panels. Install the roof membrane according to Versico's specifications.

VersiCore MP-H 4' x 8' panels can be secured to the roof deck with Versico's DASH Adhesive, either full coverage or bead spacing of no less than 6" on center.

VersiCore MP-H 4' x 4' panels may be adhered to prepared concrete deck with a full mopping of Type III or IV asphalt.

REVIEW CURRENT VERSICO SPECIFICATIONS AND DETAILS FOR SPECIFIC installation REQUIREMENTS.

VERSICO
ROOFING SYSTEMS

A SINGLE SOURCE FOR SINGLE-PLY ROOFING

Versico, PO Box 1289, Carlisle, PA 17013
Tel: **800.992.7663** Fax: 717.960.4036 Web: **www.versico.com**

VERSIGARD® PRE-CLEANED NON-REINFORCED EPDM MEMBRANE (NO DUST)

Overview

Versico's VersiGard EPDM Pre-Cleaned Non-Reinforced roofing membranes are available in thicknesses of 45-mil (1.14 mm), 60-mil (1.52 mm), and 90-mil (2.29 mm). Ideal for new single-ply roof construction and re-roofing applications, VersiGard EPDM Pre-Cleaned Non-Reinforced membranes are available in widths of up to 10' (3 m) and lengths of up to 100' (30 m). These membranes are Fire Retardant (FR), which means they are specially formulated to inhibit the spread of flame and meet or exceed code body testing criteria for fire retardant roofing membranes.

Features and Benefits

- Versico EPDM has 50 years of proven performance and industry-leading weathering resistance (41,580 kJ/m2 total radiant exposure without cracking or crazing)
- Quick-Applied Tape Seam (QAT) Technology and full line of Quick-Applied flashing accessories enhance workmanship quality
- Dark colored EPDM is the smart choice in colder climates:
  - Reduces heating costs which are generally 3-5 times greater than air conditioning costs
  - Reduces carbon footprint by lowering heating costs
  - Reduces safety hazard from snow and ice accumulation
  - Reduces hazardous conditions from frost, dew or ice that is difficult to see on white membranes
  - Reduces potential condensation problems that can erode performance
- Lifecycle Assessment using EPA's TRACI model analyzed EPDM, TPO, PVC and Modified-Bitumen
  - EPDM had the lowest Global Warming Potential
  - EPDM had the lowest Acid Rain impact
  - EPDM had the lowest contribution to smog
- Numerous studies and real-world experience confirm that VersiGard EPDM's 465% elongation and weathering resistance result in superior hail damage resistance; UL 2218 class 4 rating
- EPDM is the most dimensionally stable heat-resistant membrane and stays flexible even in extremely cold conditions, down to -40°F (See Flexability/Torsion DMA data)
- Extruded manufacturing technology results in seamless sheets that are UL and FM approved
- Industry-leading 15-, 20-, 25-, and 30-year warranties are available
- Versico manufactures all the major components of a typical roofing system including membrane, flashings, tapes, adhesives, sealants, insulations and insulating cover boards

Versico's QAT Seam Technology

The Quick-Applied Tape process results in a reliable seam with greater peel and shear strengths and no entrapped air bubbles. Consistent placement of the Quick-Applied Tape maximizes the splice area and results in a high-quality seam. Quick-Applied Tape has a shelf life of one year.

Labor Saving Features and Benefits

- Pre-Cleaned EPDM allows primer to be roller applied
- With Versico's Quick-Applied Tape, most of the labor to create seams between membrane panels is completed in a quality-controlled, state-of-the-art environment
- Quick-Applied Tape is available on all VersiGard Pre-Cleaned membranes up to 10' (3 m) in width, providing the fastest way to complete a seam in today's roofing market

VERSICO
ROOFING SYSTEMS

A SINGLE SOURCE FOR SINGLE-PLY ROOFING

Versico, PO Box 1289, Carlisle, PA 17013
Tel: **800.992.7663** Fax: 717.960.4036 Web: **www.versico.com**

LOW-VOC BONDING ADHESIVE

Overview

Versico's Low-VOC Bonding Adhesive is a high-strength, solvent-based contact adhesive that allows bonding of EPDM and TPO membrane to various porous and non-porous substrates. This product meets the < 250 gpl VOC content requirements of the OTC Model Rule for Single-Ply Roofing Adhesives. Low-VOC Bonding Adhesive is compatible with VersiCore MP-H® and SecurShield® polyisocyanurate insulation, structural and lightweight concrete, plywood, oriented strand board, wood fiberboard, SECUROCK®, masonry, and various metal finishes. Low-VOC Bonding Adhesive is easily applied with a 9" (288 mm) medium nap roller, creating a strong adhesive bond between the membrane and substrate.

This product <u>does not comply</u> with the following California counties' VOC regulations: Alameda, Contra Costa, El Dorado, Los Angeles, Marin, Napa, Orange, Riverside, Sacramento, San Bernardino, San Diego, San Francisco, San Mateo, Santa Clara, Solano, Sonoma and Tehama. These areas require the use of Versico's Low-VOC Bonding Adhesive 1168.

Features and Benefits

- Can be applied with a medium nap roller for easy application
- Provides excellent adhesion between EPDM or TPO membranes and a variety of substrates
- Lower viscosity promotes ease of application even in cold weather

Mixing

Stir thoroughly once per day until all settled polymers are dispersed and the adhesive is a uniform yellow color. During mixing, scrape the sides and bottom of the pail until the adhesive is a uniform yellow color with no dark streaks. Keeping the adhesive warm, as well as using an air-operated mixing paddle, will aid in the mixing process.

Coverage

The coverage rate for Low-VOC Bonding Adhesive is 60 square feet (5.6 m²) per gallon finished surface. A 5-gallon pail should cover no more than 300 square feet (28 m²) of finished area. Coverage rates are average and may vary due to conditions on the jobsite. Porous wall surfaces like masonry block require 2 coats of bonding adhesive. Allow primer coat to flash off completely prior to applying the second coat at the required coverage rate of 60 square feet per gallon.

Application

1. Allow membrane to relax for half an hour or longer. Allowing the membrane to relax will result in the roof's surface having a smoother appearance. This is especially true for sheets that have folds or creases. The surface on or against which adhesive is to be applied shall be clean, smooth, dry, free of fins, sharp edges, loose and foreign materials, oil and grease. Depressions greater than ¼" (6 mm) should be feathered using epoxy, mortar or other approved patching material. All sharp projections shall be removed by sweeping, blowing or vacuum cleaning.

Versico, PO Box 1289, Carlisle, PA 17013
Tel: **800.992.7663** Fax: 717.960.4036 Web: **www.versico.com**

10. Adhesive must be allowed to flash-off but not become over dry. If membrane is mated with the substrate prior to the adhesive flashing off, blistering will occur. If membrane is mated with the substrate after the adhesive has over-dried, loose or unadhered areas will occur. Thin application of adhesive increases risk of over-drying.

11. KEEP OUT OF THE REACH OF CHILDREN.

TYPICAL PROPERTIES AND CHARACTERISTICS

Property	Value
Base	Synthetic rubber
Color	Yellow
Solids	22.2%
VOC	250 g/l max
Flash Point	0°F (-17°C) closed cup
Brookfield Viscosity	2600 centipoise
Avg. Net Weight	8.1 lbs/gal (3.7 kg/gal)
Packaging	5-gal pail
Shelf Life	1 year

Typical properties and characteristics are based on samples tested and are not guaranteed for all samples of this product. This data and information is intended as a guide and does not reflect the specification range for any particular property of this product.

LEED® INFORMATION

Pre-consumer Recycled Content	0%
Post-consumer Recycled Content	0%
Manufacturing Location	Carlisle, PA
VOC Content	< 250 g/L

© 2017 Versico. 01.31.17

Versico, VersiCore MP-H, and the Versico logo are trademarks of Versico. LEED is a registered trademark of the United States Green Building Council. SECUROCK is a registered trademark of USG. SecurShield is a trademark of Carlisle Construction Materials, LLC.

Savings Calculations

ECM #9 Solar Panel Array

Solar Savings

SOLAR SAVINGS		
	Average solar hrs per day	4.40
	Days per year	365
	Array Size (kW)	100
	Derate factor	0.83
	Average Annual Energy Production (kWh)	133,298

Equipment Specifications Sheets

ECM #9 Solar Panel Array

RBI SOLAR

Ground Mount Solutions

Driven | Ballasted

DESIGN • ENGINEERING • MANUFACTURING • INSTALLATION

RBI SOLAR

Complete Single-Source Solutions

RBI Solar's ground mount solar systems are designed and engineered for each customer's site specific conditions to minimize the field installation labor by eliminating field welding, drilling, or other on-site fabrication. Our meticulous project planning and precise execution combine to provide you with solar racking solutions that are tailored to the unique conditions of your location while reducing your overall total project costs. RBI provides a wide range of PV mounting systems in various sizes to offer freedom and flexibility to support every type of PV module.

Why choose RBI Solar?

- Single-source solutions aide in reduction of overall total project costs
- Streamlined production process
- Wider selection of component parts
- Higher strength steel with corrosion protection
- Uses less steel without sacrificing strength
- Pre-assembled components available
- Quick response & efficient communication
- Follow contours to mitigate civil/site work
- Nationwide installation services
- ETL Classified to UL Standard 2703
- 20-yr limited warranty
- 85+ years manufacturing experience & bankable financial backing

Ground Mount Solutions

- Customizable, site-specific solutions
- Multiple foundations available
- ETL classified to UL Standard 2703

Ballasted Mounting Solutions

- Two ballast foundation offerings
- Perfect for landfills, brownfields and non-penetrable sites

Design & Engineering

- Licensed in-house engineers
- Structural and foundation design
- Stamped drawings, including foundations
- Code compliance
- On-site pile testing

Manufacturing

- Multiple manufacturing facilities
- National & International capabilities
- ARRA compliant availability

Installation

- Dedicated Project & Construction Managers
- Highly skilled & specialized installation crews
- Company-owned post driving equipment

Our Job is to Make Yours Easier

Single-Source Provider

DESIGN

RBI Solar's in-house designers provides complete structural and foundation design. It is our focus to deliver the most effective and efficient racking solution for each project's site specific conditions.

ENGINEERING

Our licensed in-house engineers incorporate and analyze data from certified geotechnical reports, on-site pile testing and all applicable codes/loading considerations when designing each individual project.

MANUFACTURING

Having multiple state-of-the-art manufacturing facilities with vertical integration and refined manufacturing protocol, ensure RBI Solar delivers on overall quality of product with reduced lead times for material delivery to job sites.

INSTALLATION

RBI Solar provides single-source responsibility with in-house project management and a network of installation crews. Overall project coordination allows RBI Solar to focus on delivering projects on time and within budget.

Solar Racking Solutions
from the Industry's Most Trusted Team

Contact us at info@rbisolar.com or (513) 242-2051

www.rbisolar.com

RBI SOLAR